Solutions

Performance Data Reference

Prospect® 8.0.6 for Ericsson GSM/GPRS/UMTS

Vallent™

Service Management | Performance Management | Professional Services

Notices

This information was developed for products and services offered in the U.S.A.

IBM may not offer the products, services, or features discussed in this document in other countries. Consult your local IBM representative for information on the products and services currently available in your area. Any reference to an IBM product, program, or service is not intended to state or imply that only that IBM product, program, or service may be used. Any functionally equivalent product, program, or service that does not infringe any IBM intellectual property right may be used instead. However, it is the user's responsibility to evaluate and verify the operation of any non-IBM product, program, or service.

IBM may have patents or pending patent applications covering subject matter described in this document. The furnishing of this document does not give you any license to these patents. You can send license inquiries, in writing, to:

IBM Director of Licensing
IBM Corporation
North Castle Drive
Armonk, NY 10504-1785, U.S.A.

For license inquiries regarding double-byte (DBCS) information, contact the IBM Intellectual Property Department in your country or send inquiries, in writing, to:

IBM World Trade Asia Corporation
Licensing
2-31 Roppongi 3-chome, Minato-ku
Tokyo 106, Japan

The following paragraph does not apply to the United Kingdom or any other country where such provisions are inconsistent with local law:
INTERNATIONAL BUSINESS MACHINES CORPORATION PROVIDES THIS PUBLICATION "AS IS" WITHOUT WARRANTY OF ANY KIND, EITHER EXPRESS OR IMPLIED, INCLUDING, BUT NOT LIMITED TO, THE IMPLIED WARRANTIES OF NON-INFRINGEMENT, MERCHANTABILITY OR FITNESS FOR A PARTICULAR PURPOSE. Some states do not allow disclaimer of express or implied warranties in certain transactions, therefore, this statement might not apply to you.

This information could include technical inaccuracies or typographical errors. Changes are periodically made to the information herein; these changes will be incorporated in new editions of the publication. IBM may make improvements and/or changes in the product(s) and/or the program(s) described in this publication at any time without notice.

Any references in this information to non-IBM Web sites are provided for convenience only and do not in any manner serve as an endorsement of those Web sites. The materials at those Web sites are not part of the materials for this IBM product and use of those Web sites is at your own risk.

© Copyright IBM Corp. 2008, 2009. All Rights Reserved.

IBM may use or distribute any of the information you supply in any way it believes appropriate without incurring any obligation to you.

Licensees of this program who wish to have information about it for the purpose of enabling: (i) the exchange of information between independently created programs and other programs (including this one) and (ii) the mutual use of the information which has been exchanged, should contact:

IBM Corporation
2Z4A/101
11400 Burnet Road
Austin, TX 78758 U.S.A.

Such information may be available, subject to appropriate terms and conditions, including in some cases, payment of a fee.

The licensed program described in this document and all licensed material available for it are provided by IBM under terms of the IBM Customer Agreement, IBM International Program License Agreement or any equivalent agreement between us.

Any performance data contained herein was determined in a controlled environment. Therefore, the results obtained in other operating environments may vary significantly. Some measurements may have been made on development-level systems and there is no guarantee that these measurements will be the same on generally available systems. Furthermore, some measurement may have been estimated through extrapolation. Actual results may vary. Users of this document should verify the applicable data for their specific environment.

Information concerning non-IBM products was obtained from the suppliers of those products, their published announcements or other publicly available sources. IBM has not tested those products and cannot confirm the accuracy of performance, compatibility or any other claims related to non-IBM products. Questions on the capabilities of non-IBM products should be addressed to the suppliers of those products.

This information contains examples of data and reports used in daily business operations. To illustrate them as completely as possible, the examples include the names of individuals, companies, brands, and products. All of these names are fictitious and any similarity to the names and addresses used by an actual business enterprise is entirely coincidental.

Trademarks

IBM, the IBM logo, and ibm.com are trademarks or registered trademarks of International Business Machines Corp., registered in many jurisdictions worldwide. Other product and service names might be trademarks of IBM or other companies. A current list of IBM

trademarks is available on the Web at "Copyright and trademark information" at www.ibm.com/legal/copytrade.shtml.

Intel, Itanium, the Intel Inside logos, and Pentium are trademarks of Intel Corporation in the United States, other countries, or both.

Java and all Java-based trademarks and logos are trademarks or registered trademarks of Sun Microsystems, Inc. in the U.S., and other countries.

Linux is a trademark of Linus Torvalds in the United States, other countries, or both.

Microsoft and Windows are registered trademarks of Microsoft Corporation in the U.S. and other countries.

UNIX is a registered trademark of The Open Group in the United States and other countries.

Other company, product, or service names may be trademarks or service marks of others.

© Copyright IBM Corp. 2008, 2009. All Rights Reserved.

Table Of Contents

1 About This Documentation . . . 355
Audience . . . 355
Required Skills and Knowledge . . . 355
Document Conventions . . . 356
User Publications . . . 357
Viewing the Desktop Client Help Publications . . . 357
Viewing the Publications in PDF . . . 358
Training and Technical Support . . . 358

2 Introduction . . . 359

3 AUC Traffic Entities . . . 361

4 AUC Traffic Fields . . . 363
AUC Primitive Calculations . . . 363
GRAPHmultiLineSeparator . . . 363
NUMDAYS . . . 363
NUMHOURS . . . 363
AUC Peg Counts . . . 363
AUC_RELEASE . . . 363
NGSUBSCNT . . . 363
NSUBSCNT_AUCSUBS . . . 364
NUSUBSCNT . . . 364
PERLEN . . . 364
MAP_AUC Primitive Calculations . . . 364
GRAPHmultiLineSeparator . . . 364
NUMDAYS . . . 364
NUMHOURS . . . 364
MAP_AUC Peg Counts . . . 364
AUC_RELEASE . . . 364
NMAPFLT . . . 364
NMAPSUCC . . . 365
NMAPTOT . . . 365
PERLEN . . . 365
System Primitive Calculations . . . 365
GRAPHmultiLineSeparator . . . 365
NUMDAYS . . . 365
NUMHOURS . . . 365
PercentActiveSubscribers . . . 365
PercentRegisteredSubscribers . . . 365
RegisteredInroamers . . . 366
RegisteredOutroamer . . . 366
SubscribersHLR . . . 366
SubscribersVLR . . . 366
TotalCellTCHTraffic . . . 366
TotalSwitchedTraffic . . . 366

Updated: 2009-07-22

System Peg Counts . . . 367
rg_reap . . . 367

5 FNR Traffic Entities . . . 369

6 FNR Traffic Fields . . . 371
FNR Primitive Calculations . . . 371
GRAPHmultiLineSeparator . . . 371
NUMDAYS . . . 371
NUMHOURS . . . 371
FNR Peg Counts . . . 371
EXPMESSCNT . . . 371
FNR_RELEASE . . . 371
IMPMESSCNT . . . 372
INANSISUCCCNT . . . 372
INGSMSUCCCNT . . . 372
LOCREQMAPCNT . . . 372
LOCREQRELAYCNT . . . 372
LOCREQSUCCCNT . . . 372
NANSISUBSCNT . . . 372
NGSMSUBSCNT . . . 372
NPNOACNT . . . 372
OTHERMESSCNT . . . 372
PERLEN . . . 372
RELAYHOMECNT . . . 373
RELAYOUTCNT . . . 373
SMSREQMAPCNT . . . 373
SMSREQRELAYCNT . . . 373
SRFDBMISCNT . . . 373
SRIANSISUCCCNT . . . 373
SRIEXPCNT . . . 373
SRIIMPCNT . . . 373
SRIOTHERCNT . . . 373
TRANSDBMISCNT . . . 373
TRANSEXPCNT . . . 373
TRANSFAILANSICNT . . . 374
TRANSFAILCNT . . . 374
TRANSIMPCNT . . . 374
TRANSOTHERCNT . . . 374
TRANSPAIRCNT . . . 374
TRANSUCNT . . . 374
TTIN0MESSCNT . . . 374
TTIN10MESSCNT . . . 374
TTIN128MESSCNT . . . 374
TTIN1PARCNT . . . 374
TTIN5PARCNT . . . 374
TTINPOS1CNT . . . 375
TTINPOS2CNT . . . 375
TTINPOS3CNT . . . 375
TTINPOS4CNT . . . 375
TTINPOS5CNT . . . 375
TTINPOS6CNT . . . 375

© Copyright IBM Corp. 2008, 2009. All Rights Reserved.

TTINPOS7CNT . . . 375
TTINPOS8CNT . . . 375
UNKSUBSCNT . . . 375
UNSADDRESCNT . . . 375
UNSUCCANSICNT . . . 375
System Primitive Calculations . . . 375
GRAPHmultiLineSeparator . . . 376
NUMDAYS . . . 376
NUMHOURS . . . 376
PercentActiveSubscribers . . . 376
PercentRegisteredSubscribers . . . 376
RegisteredInroamers . . . 376
RegisteredOutroamer . . . 376
SubscribersHLR . . . 377
SubscribersVLR . . . 377
TotalCellTCHTraffic . . . 377
TotalSwitchedTraffic . . . 377
System Peg Counts . . . 377
rg_reap . . . 377

7 GPRS Traffic Entities . . . 379

8 GPRS Traffic Fields . . . 381
AddressFamily Primitive Calculations . . . 381
GRAPHmultiLineSeparator . . . 381
NUMDAYS . . . 381
NUMHOURS . . . 381
UnknownEnterpriseField . . . 381
AddressFamily Peg Counts . . . 382
collectionPeriod . . . 382
GSNRelease . . . 382
jnxRpfStatsBytes . . . 382
jnxRpfStatsPackets . . . 383
APN Primitive Calculations . . . 383
GRAPHmultiLineSeparator . . . 383
NUMDAYS . . . 383
NUMHOURS . . . 383
pAPNpacketSuccessRate . . . 384
pAPNSuccessRate . . . 384
pGTPaverPacktSizeDownlinkAPN . . . 384
pGTPaverPacktSizeUplinkAPN . . . 384
ppacketDropRateDownpAPN . . . 384
ppacketDropRateUplinkpAPN . . . 385
pPDPActFailpAPN . . . 385
pPDPActivMSFailpAPN . . . 385
pPDPDeActivGGSNFailpAPN . . . 385
pPDPDeActivMSFailpAPN . . . 385
pPDPDynamicAddrFailpAPN . . . 386
UnknownEnterpriseField . . . 386
APN Peg Counts . . . 386
attActPdpContDynPerApnOfGgsn . . . 386

Updated: 2009-07-22

attActPdpContextPerApnOfGgsn 386
attDeactPdpContextByGgsnPerApn 386
attDeactPdpContPerApnOfGgsn 387
collectionPeriod 387
collectionPeriod_SNMP 387
ggsn_apn_avg_actcontext 387
ggsn_apn_max_actcontext 388
ggsn_att_da_pdp_act 388
ggsn_att_deact 388
ggsn_att_init_deact 389
ggsn_att_ms_act 389
ggsn_att_ms_deact 389
ggsn_Att_pdp_act 390
ggsn_cmp_da_pdp_act 390
ggsn_cmp_init_deact 390
ggsn_cmp_ms_act 390
ggsn_cmp_ms_deact 391
ggsn_cmp_pdp_act 391
ggsnapn_err_ind_recvd 391
ggsnapn_err_ind_trans 392
ggsnApnActivePdpContextCount 392
ggsnApnActivePdpContextCount_jn 392
ggsnApnActivePdpContextMax 393
ggsnApnActivePdpContextMean 393
ggsnApnActPdpContextCountIpv6 393
ggsnApnAtmptActivationIpv6 393
ggsnApnAttemptedActivation 394
ggsnApnAttemptedAuthActivation 394
ggsnApnAttemptedDeactivation 394
ggsnApnAttemptedDynActivation 395
ggsnApnAttemptedMSActivation 395
ggsnApnAttemptedMSDeactivation 395
ggsnApnAttemptedSelfDeactivation 396
ggsnApnAttemptedUpdateMsAndSgsn 396
ggsnApnCmpltdActivationIpv6 396
ggsnApnCompletedActivation 396
ggsnApnCompletedDeactivation 397
ggsnApnCompletedDynActivation 397
ggsnApnCompletedMSActivation 397
ggsnApnCompletedMSDeactivation 398
ggsnApnCompletedSelfDeactivation 398
ggsnApnCompletedUpdateMsAndSgsn 398
ggsnApnDownlinkBytes 399
ggsnApnDownlinkBytes_jn 399
ggsnApnDownlinkBytesIpv6 399
ggsnApnDownlinkDrops 399
ggsnApnDownlinkDrops_jn 400
ggsnApnDownlinkDropsIpv6 400
ggsnApnDownlinkPackets 400
ggsnApnDownlinkPackets_jn 401
ggsnApnDownlinkPacketsIpv6 401

© Copyright IBM Corp. 2008, 2009. All Rights Reserved.

ggsnApnFailedAuthActivation . . . 401
ggsnApnGiSignalingInBytes . . . 401
ggsnApnGiSignalingInPackets . . . 402
ggsnApnGiSignalingOutBytes . . . 402
ggsnApnGiSignalingOutPackets . . . 402
ggsnApnIdleTimeOutDeactivation . . . 402
ggsnApnNbrOfTftFilters . . . 403
ggsnApnNghbrSolicitationRcv . . . 403
ggsnApnNghbrSolicitationRsp . . . 403
ggsnApnRouterSolicitationRcv . . . 403
ggsnApnRouterSolicitationRsp . . . 403
ggsnApnSessTimeoutDeactivation . . . 404
ggsnApnUplinkBytes . . . 404
ggsnApnUplinkBytes_jn . . . 404
ggsnApnUplinkBytesIpv6 . . . 405
ggsnApnUplinkDrops . . . 405
ggsnApnUplinkDrops_jn . . . 405
ggsnApnUplinkDropsIpv6 . . . 405
ggsnApnUplinkPackets . . . 406
ggsnApnUplinkPackets_jn . . . 406
ggsnApnUplinkPacketsIpv6 . . . 406
GGSNRelease . . . 406
GSNRelease . . . 407
nbrOfActivePdpContPerApnAtGgsn . . . 407
succActPdpContDynPerApnOfGgsn . . . 407
succActPdpContextPerApnOfGgsn . . . 407
succDeactPdpContByGgsnPerApn . . . 408
succDeactPdpContPerApnOfGgsn . . . 408
BGPPeerIP Primitive Calculations . . . 408
GRAPHmultiLineSeparator . . . 408
NUMDAYS . . . 408
NUMHOURS . . . 408
UnknownEnterpriseField . . . 409
BGPPeerIP Peg Counts . . . 409
bgpPeerInTotalMessages_30 . . . 409
bgpPeerInUpdates . . . 409
bgpPeerOutTotalMessages_30 . . . 409
bgpPeerOutUpdates . . . 410
collectionPeriod . . . 410
GSNRelease . . . 410
PeerFsmEstablishedTransitions . . . 410
PeerInUpdateElapsedTime . . . 411
BillingGtw Primitive Calculations . . . 411
GRAPHmultiLineSeparator . . . 411
NUMDAYS . . . 411
NUMHOURS . . . 411
UnknownEnterpriseField . . . 411
BillingGtw Peg Counts . . . 412
collectionPeriod . . . 412
ggsnAcctDataRecTransReqCncld . . . 412

Updated: 2009-07-22

ggsnAcctDataRecTransReqSent 412
ggsnAcctDataRecTransReqSentDup 413
ggsnAcctDataRecTransRespRcvd 413
ggsnAcctPartialRecordGenerated 413
ggsnAcctRedirectionReqRcvd 414
ggsnAcctRedirectionRespSent 414
Release_BillingGtw 414
BSSGP Primitive Calculations 414
GRAPHmultiLineSeparator 414
NUMDAYS 415
NUMHOURS 415
BSSGP Peg Counts 415
bssgpDownlinkOctets 415
bssgpDownlinkPackets 415
bssgpDownlinkPacketsSignalling 416
bssgpStatusBvcUnknown 416
bssgpUplinkOctets 416
bssgpUplinkPackets 417
bssgpUplinkPacketsSignalling 417
collectionPeriod 417
Card Primitive Calculations 417
atmal5IfInPkts 417
atmal5IfOutPkts 418
AverageCapGTP_CPICthisGGSN 418
CardGOS 418
DatagramFragFailRate_GSN 418
DatagramInAddressFailRate_GSN 418
DatagramInHeaderFailRate_GSN 418
DatagramNoRoutesFailRate_GSN 418
GRAPHmultiLineSeparator 419
IcmpInMsgsSucc 419
NUMDAYS 419
NUMHOURS 419
pDatagramFragFail 419
pDatagramInAddrFailRate 419
pDatagramInHdrFail 420
pDatagramNoRoutesFail 420
pToIDatagramsFail 420
TotalCapGTP_CPICThisGGSN 420
TotIpDatagramsFailRate_GSN 420
UnknownEnterpriseField 420
Card Peg Counts 421
atmal5CRCErrors 421
atmal5IfInDiscards 421
atmal5IfInErrors 421
atmal5IfInOctets 422
atmal5IfInUcastPkts 422
atmal5IfOutDiscards 422
atmal5IfOutErrors 423
atmal5IfOutOctets 423

© Copyright IBM Corp. 2008, 2009. All Rights Reserved.

atmal5IfOutUcastPkts 423
atmal5OverSizedSDUs 424
atmlCellDrops 424
atmlCLPCells 424
atmlCongestionErrors 425
atmlCPIErrors 425
atmlInvalidCells 425
atmlVpiVciLookupErrors 426
atmplLineAIS 426
atmplLineOverheadBIPErrors 426
atmplLineRDI 427
atmplLineREI 427
atmplLOF 427
atmplLOP 428
atmplLOS 428
atmplOOF 428
atmplPathAIS 428
atmplPathOverheadBIPErrors 429
atmplPathRDI 429
atmplPathREI 429
atmplSectionOverheadBIPErrors 430
atmtclCorrectableHECs 430
atmtclEgressCells 430
atmtclIngressCells 431
atmtclOCDEvents 431
atmtclUncorrectableHECs 431
bgpPeerInTotalMessages_21 432
bgpPeerOutTotalMessages_21 432
collectionPeriod 432
collectionPeriod_SNMP_GGSN 432
ethInErrors_Unit0 433
ethInErrors_Unit1 433
ethInErrorsBUF_Unit0 433
ethInErrorsBUF_Unit1 434
ethInErrorsCE_Unit0 434
ethInErrorsCE_Unit1 434
ethInErrorsCLBLK_Unit0 435
ethInErrorsCLBLK_Unit1 435
ethInErrorsCS_Unit0 435
ethInErrorsCS_Unit1 436
ethinErrorsFF_Unit0 436
ethinErrorsFF_Unit1 436
ethInErrorsMBLK_Unit0 436
ethInErrorsMBLK_Unit1 437
ethInErrorsRF_Unit0 437
ethInErrorsRF_Unit1 437
ethInErrorsTL_Unit0 438
ethInErrorsTL_Unit1 438
ethInMF_Unit0 438
ethInMF_Unit1 439
ethInPkts_Unit0 439

Updated: 2009-07-22

ethInPkts_Unit1 439
ethInUcastPkts_Unit0 440
ethInUcastPkts_Unit1 440
ethOutErrorOWN_Unit0 440
ethOutErrorOWN_Unit1 441
ethOutErrors_Unit0 441
ethOutErrors_Unit1 441
ethOutErrorsBUF_Unit0 441
ethOutErrorsBUF_Unit1 442
ethOutErrorsEC_Unit0 442
ethOutErrorsEC_Unit1 442
ethOutErrorsLC_Unit0 443
ethOutErrorsLC_Unit1 443
ethOutErrorsLO_Unit0 443
ethOutErrorsLO_Unit1 444
ethOutErrorsNC_Unit0 444
ethOutErrorsNC_Unit1 444
ethOutErrorsTO_Unit0 445
ethOutErrorsTO_Unit1 445
ethOutErrorsTXD_Unit0 445
ethOutErrorsTXD_Unit1 445
ethOutErrorsUF_Unit0 446
ethOutErrorsUF_Unit1 446
ethOutPkts_Unit0 446
ethOutPkts_Unit1 447
ethOutUcastPkts_Unit0 447
ethOutUcastPkts_Unit1 447
filterIpsecPacketsOnCPU 448
filterIpsecPacketsOnCPU_IPSecFilter 448
filterIpsecPacketsOnCPU_normalFilter 448
filterPacketsAllowedOnCPU 449
filterPacketsAllowedOnCPU_IPSecFilter 449
filterPacketsAllowedOnCPU_normalFilter 449
filterPacketsDeniedOnCPU 450
filterPacketsDeniedOnCPU_IPSecFilter 450
filterPacketsDeniedOnCPU_normalFilter 450
ggsnGtpcControlLoad 451
ggsnGtpcControlPacketDrops 451
ggsnGtpcCpuUsage 451
ggsnGtpcMemory 451
ggsnGtpcMemoryUsed 452
ggsnGtpcNbrOfActivePdpContexts 452
ggsnGtpcNbrOfActPdpContxtIpv6 452
ggsnGtpcPdpCapacity 452
ggsnGtpcRole 453
ggsnGtpcStatus 453
ggsnGtpcTftFilterDepthMax 453
ggsnGtpcTftFilterDepthMean 453
ggsnGtpuCpuUsage 454
ggsnGtpuMemory 454
ggsnGtpuMemoryUsed 454

© Copyright IBM Corp. 2008, 2009. All Rights Reserved.

ggsnGtpuNbrOfActivePdpContexts 454
ggsnGtpuNbrOfActPdpContxtIpv6 455
ggsnGtpuPayloadLoad 455
ggsnGtpuPdpCapacity 455
ggsnGtpuRole 455
ggsnGtpuStatus 455
ggsnGtpuUserDownlinkDrops 456
ggsnGtpuUserUplinkDrops 456
ggsnPicNbrOfActivePdpContexts 456
GSNRelease 456
icmpInDestUnreachs 457
icmpInEchoReps 457
icmpInEchos 457
icmpInErrors 458
icmpInMsgs 458
icmpInParmProbs 458
icmpInRedirects 459
icmpInTimeExcds 459
icmpOutDestUnreach 459
icmpOutEchoReps 459
icmpOutEchos 460
icmpOutMsgs 460
icmpOutParmProbs 460
icmpOutRedirects 461
icmpOutTimeExcds 461
interfaceType 461
ipForwardingTableEntries 462
ipForwDatagrams 462
ipFragCreates 462
ipFragFails 463
ipFragOKs 463
ipInAddrErrors 463
ipInHdrErrors 464
ipInReceives 464
ipOutNoRoutes 464
ipReasmFails 465
ipReasmOKs 465
ipReasmReqds 465
ipsecIncorrectPackets 465
ipsecIssIllegalSpi 466
ipsecIssInOkPackets 466
ipsecIssMd5Mismatch 466
ipsecIssOutOkPackets 467
ipsecIssSha1Mismatch 467
ipsecWaPacketsProcessed 467
ospfExternLsaCount 468
ospfOriginateNewLsas 468
ospfRxNewLsas_R21 468
OutErrors 469
Release_SNMP_GGSN 469
Connection Primitive Calculations 469

Updated: 2009-07-22

GRAPHmultiLineSeparator 469
NUMDAYS 470
NUMHOURS 470
UnknownEnterpriseField 470
Connection Peg Counts 470
collectionPeriod 470
filterPackets_in_30 470
filterPackets_out_30 471
filterPacketsAllowed_in_30 471
filterPacketsAllowed_out_30 471
filterPacketsDenied_in_30 471
filterPacketsDenied_out_30 472
GSNRelease 472
DestClass Primitive Calculations 472
GRAPHmultiLineSeparator 472
NUMDAYS 472
NUMHOURS 473
UnknownEnterpriseField 473
DestClass Peg Counts 473
collectionPeriod 473
GSNRelease 473
jnxDcuStatsBytes 474
jnxDcuStatsPackets 474
DHCP Primitive Calculations 474
GRAPHmultiLineSeparator 474
NUMDAYS 475
NUMHOURS 475
UnknownEnterpriseField 475
DHCP Peg Counts 475
collectionPeriod 475
ggsnDhcpClientRepliesDiscarded 475
ggsnDhcpClientRepliesReceived 476
ggsnDhcpClientRequestsSent 476
Release_Dhcp 476
DLCI Primitive Calculations 476
DLCIGOS 476
Gb_FR_TrafficRX 477
Gb_FR_TrafficTX 477
GRAPHmultiLineSeparator 477
MaxCIR 477
MinCIR 477
NUMDAYS 477
NUMHOURS 477
pDisEligRx 478
pDisEligTx 478
UnknownEnterpriseField 478
UtilizationRX 478
UtilizationTX 478
DLCI Peg Counts 478
collectionPeriod 479

© Copyright IBM Corp. 2008, 2009. All Rights Reserved.

frMfeRxDiscards 479
frMfeRxFragmentedPDUs 479
frMfeRxFragments 479
frMfeRxPDUs 480
frMfeRxReassemblyMismatch 480
frMfeRxReassemblyTooBig 480
frMfeTxBlocked 481
frMfeTxDiscards 481
frMfeTxFragmentedPDUs 481
frMfeTxFragmentErrors 481
frMfeTxFragments 482
frMfeTxPDUs 482
frPvcCirHiWat 482
frPvcCirLoWat 483
frPvcRxBECNs 483
frPvcRxBytes 483
frPvcRxDe 484
frPvcRxFECNs 484
frPvcRxFrames 484
frPvcRxStops 485
frPvcTxBytes 485
frPvcTxDe 485
frPvcTxFrames 485
frPvcTxStops 486
GSNRelease 486
ForwardClass Primitive Calculations 486
GRAPHmultiLineSeparator 486
NUMDAYS 486
NUMHOURS 487
UnknownEnterpriseField 487
ForwardClass Peg Counts 487
collectionPeriod 487
GSNRelease 487
jnxCosIfqHpNonTcpRedDropByteRate 488
jnxCosIfqHpNonTcpRedDropBytes 488
jnxCosIfqHpNonTcpRedDropPktRate 488
jnxCosIfqHpNonTcpRedDropPkts 489
jnxCosIfqHpTcpRedDropByteRate 489
jnxCosIfqHpTcpRedDropBytes 489
jnxCosIfqHpTcpRedDropPktRate 490
jnxCosIfqHpTcpRedDropPkts 490
jnxCosIfqLpNonTcpRedDropByteRate 490
jnxCosIfqLpNonTcpRedDropBytes 491
jnxCosIfqLpNonTcpRedDropPktRate 491
jnxCosIfqLpNonTcpRedDropPkts 491
jnxCosIfqLpTcpRedDropByteRate 492
jnxCosIfqLpTcpRedDropBytes 492
jnxCosIfqLpTcpRedDropPktRate 492
jnxCosIfqLpTcpRedDropPkts 493
jnxCosIfqQedByteRate 493
jnxCosIfqQedBytes 493

Updated: 2009-07-22

jnxCosIfqQedPktRate 494
jnxCosIfqQedPkts 494
jnxCosIfqTailDropPktRate 494
jnxCosIfqTailDropPkts 495
jnxCosIfqTotalRedDropByteRate 495
jnxCosIfqTotalRedDropBytes 495
jnxCosIfqTotalRedDropPktRate 496
jnxCosIfqTotalRedDropPkts 496
jnxCosIfqTxedByteRate 496
jnxCosIfqTxedBytes 497
jnxCosIfqTxedPktRate 497
jnxCosIfqTxedPkts 497
GSN Available Data Fields 498
CGSN_AvailableDataPct 498
GGSN_CLI_AvailableDataPct 498
GGSN_Snmp_AvailableDataPct 498
SGSN_AvailableDataPct 498
GSN Primitive Calculations 498
attActPdpContextMSPerSgsn 498
attDeactPdpContextGgsnPerSgsn 498
attDeactPdpContextMsPerSgsn 498
AverageCapGTP_CPICallGGSN 499
ethInErrors 499
ethInErrorsBUF 499
ethInErrorsCE 499
ethInErrorsCLBLK 499
ethInErrorsCS 499
ethInErrorsFF 499
ethInErrorsMBLK 500
ethInErrorsRF 500
ethInErrorsTL 500
ethInMF 500
ethInPkts 500
ethOutErrorOWN 500
ethOutErrors 500
ethOutErrorsBUF 501
ethOutErrorsEC 501
ethOutErrorsLC 501
ethOutErrorsLO 501
ethOutErrorsNC 501
ethOutErrorsTO 501
ethOutErrorsTXD 501
ethOutErrorsUF 502
ethOutPkts 502
filterAllowedPacketsOnSlot 502
filterDeniedPacketsOnSlot 502
filterIpsecPacketsOnSlot 502
gprsMmSgsnUnsuccessfulPagingProcedures 502
GRAPHmultiLineSeparator 502
icmpInDestUnreachs 503
icmpInDestUnreachsRate 503

© Copyright IBM Corp. 2008, 2009. All Rights Reserved.

icmpInEchoReps 503
icmpInEchos 503
icmpInErrorRate 503
icmpInErrors 503
icmpInMsgs 504
IcmpInMsgsSucc 504
icmpInParmProbs 504
icmpInRedirects 504
icmpInTimeExcds 504
icmpOutDestUnreachs 504
icmpOutDestUnreachsRate 504
icmpOutEchoReps 505
icmpOutEchos 505
icmpOutErrors 505
icmpOutErrorsRate 505
icmpOutMsgs 505
icmpOutParmProbs 505
icmpOutRedirects 505
icmpOutTimeExcds 506
ipForwardingTableEntries 506
ipForwDatagrams 506
ipForwDatagramsRate 506
ipFragCreates 506
ipFragFails 506
ipFragFailsRate 507
ipFragOKs 507
ipInAddrErrors 507
ipInAddrErrorsRate 507
ipInDeliversRate 507
ipInDiscardsRate 507
ipInHdrErrors 508
ipInHdrErrorsRate 508
ipInReceives 508
ipOutDiscardsRate 508
ipOutNoRoutes 508
ipReasmFails 508
ipReasmFailsRate 509
ipReasmOKs 509
ipReasmReqds 509
ipsecIncorrectPackets 509
ipsecIssIllegalSpi 509
ipsecIssInOkPackets 509
ipsecIssMd5Mismatch 510
ipsecIssOutOkPackets 510
ipsecIssSha1Mismatch 510
ipsecWaPacketsProcessed 510
MMAttGprsAttachU 510
MMAttGprsDetachMsU 510
MMAttGprsDetachSgsnU 510
MMAttInterSgsnRaUpdateU 511
MMAttIntraSgsnRaUpdateU 511

Updated: 2009-07-22

MMNbrActAttachedSubG 511
MMSuccInterSgsnRaUpdateU 511
MMUnsuccAttachCC14G 511
MMUnsuccAttachCC8G 511
NUMDAYS 511
NUMHOURS 512
ospfExternLsaCount 512
ospfOriginateNewLsas 512
ospfRxNewLsas 512
Payload_DL_SGSN 512
Payload_UL_SGSN 512
pdropPackRatedownAllSGSN 512
pdropPackRateupAllSGSN 513
pGGSNPacketSuccessRate 513
pGprsAttchFail 513
pGTPaveragePacketSizeUpLink 513
pGTPaverPackSizeDownlinkGGSN 513
pGTPpacketDropRateDownlink 514
pGTPpacketDropRateUpLink 514
pInterSgsnRoutUpdFailpSgsn 514
pIntraSgsnRoutUpdFailpSgsn 514
pPagingFailpSgsn 514
pPdpActReFailpGGSN 514
pPdpContextEstabFailpGGSN 515
pPdpContextEstabFailpSGSN 515
pPdpContextModFailpSGSN 515
pPdpContextUpdFailpGGSN 515
pPdpDeActReFailpGGSN 515
pPdpSelfDeActReFailpGGSN 516
pPdpSessionManReFailpGGSN 516
pPdpUpdReFailpGGSN 516
pSessionManSuccessRateGGSN 516
pTotalAPNpacketSuccessRate 516
pTotalAPNSuccessRate 517
SECAttIdentityReqImsiG 517
SECAttReqAuthSetsSentToHlrBySGSN 517
SECemptyResponsesForAuthSetsFromHlr 517
SECSuccIdentityReqImsiG 517
SECSuccReqAuthSetsSentToHlrBySGSN 517
SMAttActPdpContextDynG 517
SMNbrActivePdpPerSgsnG 518
SMNbrActPdpContextG 518
SMSuccActPdpContextDynG 518
SMSuccActPdpContextG 518
SMSuccModPdpContextSgsnG 518
SuccActPdpContextDynRate 518
SuccActPdpContextRate 518
succDeactPdpContextGgsnPerSgsn 519
succDeactPdpContextMsPerSgsn 519
SuccGprsAttachRate 519
SuccIntraSgsnRaUpdate_Rate 519

© Copyright IBM Corp. 2008, 2009. All Rights Reserved.

TotalCapGTP_CPICallGGSN . . . 519
UnknownEnterpriseField . . . 519
GSN Peg Counts . . . 520
attActPdpContextDynMSPerSgsn . . . 520
attAuthInSgsn . . . 520
attCombiAttach . . . 520
attCombiDetachMs . . . 521
attGprsAttach . . . 521
attGprsAttachUmts . . . 521
attGprsAttachVisitor . . . 522
attGprsDetachMs . . . 522
attGprsDetachMsUmts . . . 522
attGprsDetachSgsn . . . 523
attGprsDetachSgsnUmts . . . 523
attIdentityReq . . . 523
attImsiAttach . . . 524
attImsiDetachMS . . . 524
attInterSgsnRaUpdate . . . 524
attInterSgsnRaUpdateUmts . . . 525
attInterSgsnRaUpdateVisitor . . . 525
attIntraSgsnRaUpdate . . . 525
attIntraSgsnRaUpdateUmts . . . 526
attPacketSwitchingPaging . . . 526
attPacketSwitchingPagingUmts . . . 526
attReqAuthSetsSentToHlrBySgsn . . . 527
bssgpAttResumeProc . . . 527
bssgpAttSuspendProc . . . 527
bssgpDLPacketsDscMobileSuspend . . . 528
bssgpDownlinkPacketsBuff . . . 528
bssgpDownlinkPacketsBuffBucketFull . . . 528
bssgpDownlinkPacketsBuffLlcSuspend . . . 529
bssgpDownlinkPacketsBuffMobileSuspend . . . 529
bssgpDownlinkPacketsBuffSnapshot . . . 529
bssgpDownlinkPacketsDiscardedBucketFull . . . 530
bssgpDownlinkPacketsDiscardedBvcBlocked . . . 530
bssgpDownlinkPacketsDiscardLlcSuspended . . . 530
CAMAttCamelDialogues . . . 531
CAMAttCamelDialoguesU . . . 531
CAMFailDialoguesScf . . . 531
CAMFailDialoguesScfU . . . 532
CAMFailDialoguesSsf . . . 532
CAMFailDialoguesSsfU . . . 532
collectionPeriod . . . 533
collectionPeriod_GGSN . . . 533
collectionPeriod_SNMP_GGSN . . . 533
discardedAttachMsError . . . 533
discardedCombiAttach . . . 534
discardedCombiRaUpdate . . . 534
discardedDetach . . . 534
discardedGprsAttach . . . 535
discardedPayloadPacket . . . 535

Updated: 2009-07-22

discardedRaUpdate 535
DiscardedSccpConnectInd 536
discardedSessionMgmnt 536
downlinkSndcpNpduSent 536
downlinkSndcpOctetSent 537
emptyResponsesForAuthSetsFromHlr 537
errLlcFramesDetectedBySgsn 537
ggsn_auth_failed 538
ggsn_ctrl_pkt_drops 538
ggsn_da_unavail 538
ggsn_Dlink_Bytes 538
ggsn_Dlink_Drops 539
ggsn_Dlink_Packets 539
ggsn_err_ind_recvd 539
ggsn_err_ind_trans 540
ggsn_invalid_req_format 540
ggsn_mem_unavail 540
ggsn_mndt_ie_invalid 541
ggsn_mndt_ie_missing 541
ggsn_opt_ie_invalid 541
ggsn_pdp_cr_resp_trans 542
ggsn_pdp_creation_failed 542
ggsn_pdp_deact_failed 542
ggsn_pdp_del_idle_sv 543
ggsn_pdp_del_req_trans 543
ggsn_pdp_del_res_recvd 543
ggsn_pdp_del_res_trans 544
ggsn_pdp_del_user_cmd 544
ggsn_pdp_upd_req_recvd 544
ggsn_pdp_upd_req_trans 545
ggsn_pdp_upd_res_recvd 545
ggsn_pdp_upd_res_trans 545
ggsn_pdp_update_failed 546
ggsn_Pkt_filter_semantic_err 546
ggsn_Pkt_filter_syntax_err 546
ggsn_ref_notexist 546
ggsn_req_accpt 547
ggsn_req_received 547
ggsn_req_transmitted 547
ggsn_res_not_avail 548
ggsn_res_received 548
ggsn_res_transmitted 548
ggsn_serv_unsupported 549
ggsn_sgsn_pdp_cr_req_recvd 549
ggsn_sgsn_pdp_del_req_recvd 549
ggsn_sys_failed 550
ggsn_tft_semantic_err 550
ggsn_tft_syntax_err 550
ggsn_unkwn_apn 550
ggsn_unkwn_pdp_add_or_type 551
ggsn_Uplink_Bytes 551

© Copyright IBM Corp. 2008, 2009. All Rights Reserved.

ggsn_Uplink_Drops . . . 551
ggsn_Uplink_Packets . . . 552
ggsn_ver_unsupp_received . . . 552
ggsn_ver_unsupp_transmitted . . . 552
ggsn_ver_unsupported . . . 553
ggsnAlarmCriticalNumber . . . 553
ggsnAlarmMajorNumber . . . 553
ggsnAlarmMinorNumber . . . 554
ggsnAlarmNumber . . . 554
ggsnAlarmUnknownNumber . . . 554
ggsnAlarmWarningNumber . . . 555
ggsnAttemptedActivation . . . 555
ggsnAttemptedActivationIpv6 . . . 555
ggsnAttemptedDeactivation . . . 555
ggsnAttemptedDeactivation_jn . . . 556
ggsnAttemptedSecondaryActivation . . . 556
ggsnAttemptedSelfDeactivation . . . 556
ggsnAttemptedTimeDeactivation . . . 557
ggsnAttemptedUpdate . . . 557
ggsnAttemptedUpdate_jn . . . 557
ggsnAttmptManualDeactivation . . . 558
ggsnCompletedActivation . . . 558
ggsnCompletedActivationIpv6 . . . 558
ggsnCompletedDeactivation . . . 559
ggsnCompletedManualDeactivation . . . 559
ggsnCompletedSecondaryActivation . . . 559
ggsnCompletedSelfDeactivation . . . 559
ggsnCompletedTimeDeactivation . . . 560
ggsnCompletedUpdate . . . 560
ggsnControlLoad . . . 560
ggsnDownlinkBytesIpv6 . . . 561
ggsnDownlinkDropsBytes . . . 561
ggsnDownlinkDropsIpv6 . . . 561
ggsnDownlinkPacketsIpv6 . . . 561
ggsnFailedActivation . . . 562
ggsnGtpControlPacketDrops . . . 562
ggsnGtpDownlinkBytes . . . 562
ggsnGtpDownlinkBytes_jn . . . 563
ggsnGtpDownlinkPackets . . . 563
ggsnGtpDownlinkPackets_jn . . . 563
ggsnGtpEchoReqReceived . . . 564
ggsnGtpEchoReqSent . . . 564
ggsnGtpEchoRespReceived . . . 564
ggsnGtpEchoRespSent . . . 565
ggsnGtpErrInvalidReqFormatDel . . . 565
ggsnGtpErrInvalidReqFormatUpd . . . 565
ggsnGtpErrMndtryIEInvalidDel . . . 565
ggsnGtpErrMndtryIEInvalidUpd . . . 565
ggsnGtpErrMndtryIEMissingDel . . . 566
ggsnGtpErrMndtryIEMissingUpd . . . 566
ggsnGtpErrOptionalIEInvDel . . . 566

Updated: 2009-07-22

ggsnGtpErrOptionalIEInvUpd 566
ggsnGtpErrorApnAccessDenied 566
ggsnGtpErrorApnUnknown 566
ggsnGtpErrorAuthenticationFailed 567
ggsnGtpErrorDynAddrUnavailable 567
ggsnGtpErrorIndicationReceived 567
ggsnGtpErrorIndicationSent 568
ggsnGtpErrorInvalidRequestFormat 568
ggsnGtpErrorMandatoryIEInvalid 568
ggsnGtpErrorMandatoryIEMissing 569
ggsnGtpErrorMemoryUnAvailable 569
ggsnGtpErrorOptionalIEInvalid 569
ggsnGtpErrorPackFiltSemantError 570
ggsnGtpErrorPackFiltSyntaxError 570
ggsnGtpErrorPDPAddrUnknown 570
ggsnGtpErrorPdpWithoutTft 570
ggsnGtpErrorReferenceInexistent 571
ggsnGtpErrorResourceUnavailable 571
ggsnGtpErrorServiceUnsupported 571
ggsnGtpErrorSystemFailure 572
ggsnGtpErrorSystemFailureUpd 572
ggsnGtpErrorTFTSemanticError 572
ggsnGtpErrorTFTSyntaxError 572
ggsnGtpErrorTFTSyntaxErrorUpd 573
ggsnGtpErrPackFiltSemantErUpd 573
ggsnGtpErrPackFiltSyntaxErUpd 573
ggsnGtpErrReferInexistentDel 573
ggsnGtpErrRefInexistentUpd 573
ggsnGtpErrTFTSemanticErrorUpd 574
ggsnGtpNbrofCreatedTunnels 574
ggsnGtpNbrOfTunnels 574
ggsnGtpPdpCreateReqReceived 574
ggsnGtpPdpCreateRespSent 575
ggsnGtpPdpDeleteReqReceived 575
ggsnGtpPdpDeleteReqSent 575
ggsnGtpPdpDeleteRespReceived 576
ggsnGtpPdpDeleteRespSent 576
ggsnGtpPdpUpdateReqReceived 576
ggsnGtpPdpUpdateReqSent 577
ggsnGtpPdpUpdateRespReceived 577
ggsnGtpPdpUpdateRespSent 577
ggsnGtpPrAlreadyFulfilled 578
ggsnGtpPrDataRecTransferReceived 578
ggsnGtpPrDataRecTransferSent 578
ggsnGtpPrDecodingError 578
ggsnGtpPrDupPacketFulfilled 579
ggsnGtpPrEchoReqReceived 579
ggsnGtpPrEchoRequestsSent 579
ggsnGtpPrEchoRespReceived 580
ggsnGtpPrEchoRespSent 580
ggsnGtpPrErrorMandatoryIEInvalid 580

© Copyright IBM Corp. 2008, 2009. All Rights Reserved.

ggsnGtpPrErrorMandatoryIEMissing 581
ggsnGtpPrErrorOptionalIEInvalid 581
ggsnGtpPrErrorRefInexistent 581
ggsnGtpPrimeDataRecTransfReqTransm 582
ggsnGtpPrimeDataRecTransfResRcvd 582
ggsnGtpPrimeEchoReqRcvd 582
ggsnGtpPrimeEchoReqTransm 583
ggsnGtpPrimeEchoResRcvd 583
ggsnGtpPrimeEchoResTransm 583
ggsnGtpPrimeMndtIE_invalid 584
ggsnGtpPrimeMndtIE_missing 584
ggsnGtpPrimeNodeAliveReqRcvd 584
ggsnGtpPrimeNodeAliveReqTransm 584
ggsnGtpPrimeNodeAliveResRcvd 585
ggsnGtpPrimeNodeAliveResTransm 585
ggsnGtpPrimeOptIE_invalid 585
ggsnGtpPrimeRedReqRcvd 586
ggsnGtpPrimeRedReqTransm 586
ggsnGtpPrimeRedResRcvd 586
ggsnGtpPrimeRedResTransm 587
ggsnGtpPrimeVerUnsupPktRcvd 587
ggsnGtpPrimeVerUnsupPktTransm 587
ggsnGtpPrInvalidMessageFormat 588
ggsnGtpPrNodeAliveReqReceived 588
ggsnGtpPrNodeAliveReqSent 588
ggsnGtpPrNodeAliveRespReceived 589
ggsnGtpPrNodeAliveRespSent 589
ggsnGtpPrNoResource 589
ggsnGtpPrRedirectReqReceived 589
ggsnGtpPrRedirectReqSent 590
ggsnGtpPrRedirectRespReceived 590
ggsnGtpPrRedirectRespSent 590
ggsnGtpPrRequestAccepted 591
ggsnGtpPrRequestUnfulfilled 591
ggsnGtpPrServiceUnsupported 591
ggsnGtpPrSndDataRecordPackets 592
ggsnGtpPrSystemFailure 592
ggsnGtpPrVersionUnsupported 592
ggsnGtpPrVerUnsupPacketsReceived 592
ggsnGtpPrVerUnsupPacketsSent 593
ggsnGtpRequestsAccepted 593
ggsnGtpUplinkBytes 593
ggsnGtpUplinkBytes_jn 594
ggsnGtpUplinkPackets 594
ggsnGtpUplinkPackets_jn 594
ggsnGtpVerUnsupPacketsReceived 595
ggsnGtpVerUnsupPacketsSent 595
ggsnNbrOfActivePdpContexts 595
ggsnNbrOfActivePdpContexts_jn 596
ggsnNbrOfActPdpContextsIpv6 596
ggsnNbrOfSubscribers 596

ggsnNbrOfSubscribersMean 596
ggsnNbrOfTftFilters 597
ggsnNeighborSolicitationRcv 597
ggsnNeighborSolicitationRsp 597
ggsnPayloadLoad 597
ggsnRouterSolicitationRcv 598
ggsnRouterSolicitationRsp 598
ggsnSessionTimeoutDeactivation 598
ggsnUplinkBytesIpv6 598
ggsnUplinkDropsBytes 598
ggsnUplinkDropsIpv6 599
ggsnUplinkPacketsIpv6 599
gprsMmSgsnAttachRequests 599
gprsMmSgsnCurrentlyAttachedSubscribers 600
gprsMmSgsnInterRoutingAreaUpdateRequests 600
gprsMmSgsnIntraRoutingAreaUpdateRequests 600
gprsMmSgsnPagingProcedures 600
gprsMmSgsnRejectedByAdmissionControl 601
gprsMmSgsnSuccessfulPagingProcedures 601
gprsMmSgsnUnsuccAttachRequestsCC14 601
gprsMmSgsnUnsuccessfulAttachRequests 602
gprsMmSgsnUnsuccessfulAttachRequestsCC8 602
gprsMmSgsnUnsuccInterRoutingAreaUpdReq 602
gprsMmSgsnUnsuccIntraRoutingAreaUpdReq 603
gprsMmUnsuccessfulPagingProcedures 603
gprsSmGgsnActivePdpContexts 603
gprsSmGgsnPdpDeletions 604
gprsSmGgsnSuccessfulPdpCreations 604
gprsSmGgsnSuccessfulPdpUpdatings 604
gprsSmGgsnUnsuccessfulPdpCreations 605
gprsSmGgsnUnsuccessfulPdpUpdatings 605
gprsSmSgsnDeactivations 605
gprsSmSgsnSuccessfulActivations 606
gprsSmSgsnSuccessfulModifications 606
gprsSmSgsnTotalActive 606
gprsSmSgsnUnsuccActivCC27_28_29_32_33 607
gprsSmSgsnUnsuccessfulActivations 607
gprsSmSgsnUnsuccessfulModifications 607
GSN_Type 607
gsnAutomaticConnectionRestarts 608
gsnManualConnectionRestarts 608
gsnOloadProtectionGlobalIgnoredNewConn 608
gsnOloadProtectionIgnoredExistingConn 609
gsnOloadProtectionIgnoredNewConn 609
gsnOverloadProtectionSs7MessageReject 609
GSNRelease 610
GSNRelease_GGSN 610
GTPDownlinkPacketsBuffU 610
GTPGtpuInDataOctIu 611
GTPGtpuInDataPktIu 611
GTPGtpuOutDataOctIu 611

© Copyright IBM Corp. 2008, 2009. All Rights Reserved.

GTPGtpuOutDataPktIu 611
GTPInDataOctGn 612
GTPInDataPktGn 612
GTPMBMSInDataPktGn 612
GTPMBMSOutDataPktIu 613
GTPOutDataOctGn 613
GTPOutDataPktGn 613
GTPPayloadgtpuErrorPkt 614
GTPTotalDownlinkPacketsBuffU 614
HHOAttInterSGSNNew 614
HHOAttInterSGSNOld 615
HHOAttIntraSGSN 615
HHOAttOptIntraSGSN 615
HHOSuccInterSGSNNew 616
HHOSuccInterSGSNOld 616
HHOSuccIntraSGSN 616
HHOSuccOptIntraSGSN 617
IRATHOAttInterSGSNNewGsmUmts 617
IRATHOAttInterSGSNNewUmtsGsm 617
IRATHOAttInterSGSNOldGsmUmts 618
IRATHOAttInterSGSNOldUmtsGsm 618
IRATHOAttIntraSGSNGsmUmts 618
IRATHOAttIntraSGSNUmtsGsm 619
IRATHOSuccInterSGSNNewGsmUmts 619
IRATHOSuccInterSGSNNewUmtsGsm 620
IRATHOSuccInterSGSNOldGsmUmts 620
IRATHOSuccInterSGSNOldUmtsGsm 620
IRATHOSuccIntraSGSNGsmUmts 621
IRATHOSuccIntraSGSNUmtsGsm 621
ISYSCAttIntraSgsnGsmUmtsRau 621
ISYSCAttIntraSgsnUmtsGsmRau 622
ISYSCSuccIntraSgsnGsmUmtsRau 622
ISYSCSuccIntraSgsnUmtsGsmRau 622
ISYSCUnsuccIntraSgsnGsmUmtsRauCSPSCoord 623
jnxggsnDownlinkBytes 623
jnxggsnDownlinkDrops 623
jnxggsnDownlinkPackets 624
jnxggsnUplinkBytes 624
jnxggsnUplinkDrops 624
jnxggsnUplinkPackets 624
jnxicmpInAddrMask 625
jnxicmpInAddrMaskReps 625
jnxicmpInDestUnreachs 625
jnxicmpInEchoReps 626
jnxicmpInEchos 626
jnxicmpInErrors 626
jnxicmpInMsgs 627
jnxicmpInParmProbs 627
jnxicmpInRedirects 627
jnxicmpInSrcQuenchs 628
jnxicmpInTimeExcds 628

Updated: 2009-07-22

jnxicmpInTimestampReps 628
jnxicmpInTimestamps 629
jnxicmpOutAddrMaskReps 629
jnxicmpOutAddrMasks 629
jnxicmpOutDestUnreachs 630
jnxicmpOutEchoReps 630
jnxicmpOutEchos 630
jnxicmpOutErrors 631
jnxicmpOutMsgs 631
jnxicmpOutParmProbs 631
jnxicmpOutRedirects 632
jnxicmpOutSrcQuenchs 632
jnxicmpOutTimeExcds 632
jnxicmpOutTimestampReps 632
jnxicmpOutTimestamps 633
jnxIcmpv6StatsAddrUnreachs 633
jnxIcmpv6StatsAdminProhibits 633
jnxIcmpv6StatsBadChecksums 634
jnxIcmpv6StatsBadCodes 634
jnxIcmpv6StatsBadHdrFields 634
jnxIcmpv6StatsBadLenths 635
jnxIcmpv6StatsBadNextHdrs 635
jnxIcmpv6StatsBadOptions 635
jnxIcmpv6StatsBeyondScopes 636
jnxIcmpv6StatsCantErrors 636
jnxIcmpv6StatsErrors 636
jnxIcmpv6StatsExceedReasms 636
jnxIcmpv6StatsExceedTrans 637
jnxIcmpv6StatsExcessNDOptions 637
jnxIcmpv6StatsInEchoReplies 637
jnxIcmpv6StatsInEchoReqs 638
jnxIcmpv6StatsInMLDones 638
jnxIcmpv6StatsInMLQueries 638
jnxIcmpv6StatsInMLReports 639
jnxIcmpv6StatsInNbrAdvs 639
jnxIcmpv6StatsInNbrSolicits 639
jnxIcmpv6StatsInNIReplies 640
jnxIcmpv6StatsInNIReqs 640
jnxIcmpv6StatsInParamProbs 640
jnxIcmpv6StatsInPktTooBigs 640
jnxIcmpv6StatsInRedirects 641
jnxIcmpv6StatsInRtrAdvs 641
jnxIcmpv6StatsInRtrRenumbers 641
jnxIcmpv6StatsInRtrSolicits 642
jnxIcmpv6StatsInTimeExceeds 642
jnxIcmpv6StatsInUnreachables 642
jnxIcmpv6StatsNoRoutes 643
jnxIcmpv6StatsOthers 643
jnxIcmpv6StatsOutEchoReplies 643
jnxIcmpv6StatsOutEchoReqs 644
jnxIcmpv6StatsOutMLDones 644

© Copyright IBM Corp. 2008, 2009. All Rights Reserved.

jnxIcmpv6StatsOutMLQueries 644
jnxIcmpv6StatsOutMLReports 644
jnxIcmpv6StatsOutNbrAdvs 645
jnxIcmpv6StatsOutNbrSolicits 645
jnxIcmpv6StatsOutNIReplies 645
jnxIcmpv6StatsOutNIReqs 646
jnxIcmpv6StatsOutParamProbs 646
jnxIcmpv6StatsOutPktTooBigs 646
jnxIcmpv6StatsOutRedirects 647
jnxIcmpv6StatsOutRtrAdvs 647
jnxIcmpv6StatsOutRtrRenumbers 647
jnxIcmpv6StatsOutRtrSolicits 648
jnxIcmpv6StatsOutTimeExceeds 648
jnxIcmpv6StatsOutUnreachables 648
jnxIcmpv6StatsPortUnreachs 648
jnxIcmpv6StatsRedirects 649
jnxIcmpv6StatsResponses 649
jnxIcmpv6StatsTooBigs 649
jnxIcmpv6StatsTooFreqs 650
jnxIcmpv6StatsTooShorts 650
jnxipForwDatagrams 650
jnxipFragCreates 651
jnxipFragFails 651
jnxipFragOKs 651
jnxipInAddrErrors 652
jnxipInDelivers 652
jnxipInDiscards 652
jnxipInHdrErrors 653
jnxipInReceives 653
jnxipInUnknownProtos 653
jnxipOutDiscards 654
jnxipOutNoRoutes 654
jnxipOutRequests 654
jnxipReasmFails 655
jnxipReasmOKs 655
jnxipReasmReqds 655
jnxipReasmTimeout 656
jnxipRoutingDiscards 656
jnxIpv6StatsBadOptions 656
jnxIpv6StatsBadScopes 657
jnxIpv6StatsBadVersions 657
jnxIpv6StatsDelivers 657
jnxIpv6StatsForwards 658
jnxIpv6StatsForwCacheHits 658
jnxIpv6StatsForwCacheMisses 658
jnxIpv6StatsFragDrops 659
jnxIpv6StatsFragments 659
jnxIpv6StatsFragOverFlows 659
jnxIpv6StatsFragTimeOuts 659
jnxIpv6StatsHdrNotContinuous 660
jnxIpv6StatsInAhs 660

Updated: 2009-07-22

jnxIpv6StatsInDestOpts 660
jnxIpv6StatsInEsps 661
jnxIpv6StatsInEths 661
jnxIpv6StatsInFrags 661
jnxIpv6StatsInHopByHops 662
jnxIpv6StatsInIcmps 662
jnxIpv6StatsInIcmpv6s 662
jnxIpv6StatsInIdps 663
jnxIpv6StatsInIgmps 663
jnxIpv6StatsInIps 663
jnxIpv6StatsInIpv6s 663
jnxIpv6StatsInIsoIps 664
jnxIpv6StatsInNoNhs 664
jnxIpv6StatsInOspfs 664
jnxIpv6StatsInPims 665
jnxIpv6StatsInRoutings 665
jnxIpv6StatsInTcps 665
jnxIpv6StatsInTps 666
jnxIpv6StatsInUdps 666
jnxIpv6StatsMCNoDests 666
jnxIpv6StatsNoGifs 667
jnxIpv6StatsNotMcastMembers 667
jnxIpv6StatsOptRateDrops 667
jnxIpv6StatsOutDeadNextHops 667
jnxIpv6StatsOutDiscards 668
jnxIpv6StatsOutFragCreates 668
jnxIpv6StatsOutFragFails 668
jnxIpv6StatsOutFragOKs 669
jnxIpv6StatsOutNoRoutes 669
jnxIpv6StatsOutRequests 669
jnxIpv6StatsRawOuts 670
jnxIpv6StatsReasmOKs 670
jnxIpv6StatsReceives 670
jnxIpv6StatsRedirects 671
jnxIpv6StatsTooManyHdrs 671
jnxIpv6StatsTooShorts 671
jnxIpv6StatsTooSmalls 672
jnxIpv6StatsUnreachables 672
jnxOperationBuffer 672
jnxOperationCPU 672
jnxOperationDRAMsize 673
jnxOperationHeap 673
jnxOperationISR 673
jnxOperationMemory 674
jnxOperationTemp 674
MMAttachedLostG 674
MMAttachedLostU 675
MMAttAttachAcceptNon3GPPCompliantG 675
MMAttAttachAcceptNon3GPPCompliantU 675
MMAttAuthCiphReqNon3GPPCompliantG 676
MMAttAuthCiphReqNon3GPPCompliantU 676

© Copyright IBM Corp. 2008, 2009. All Rights Reserved.

MMAttChangeOfLocalTimeG 676
MMAttChangeOfLocalTimeU 677
MMAttCombiInterSgsnRaUpdateG 677
MMAttCombiIntraSgsnRaUpdateG 677
MMAttDetachInactiveSubG 678
MMAttDetachInactiveSubU 678
MMAttImsiCombiInterSgsnRAUpdaG 678
MMAttImsiCombiIntraSgsnRAUpdaG 679
MMAttNormalIntraSgsnRaUpdateG 679
MMAttRauAcceptNon3GPPCompliantG 679
MMAttRauAcceptNon3GPPCompliantU 679
MMAttServiceReq 680
MMAttServiceReqData 680
MMAttServiceReqDataU 680
MMAttServiceRequestU 681
MMNbrActAttachedSubRAG 681
MMNbrActAttachedSubRAU 681
MMNbrActAttachedSubU 681
MMNbrCamelSubG 682
MMNbrCamelSubU 682
MMnbrDetachedInactiveSubG 682
MMnbrDetachedInactiveSubU 683
MMNbrHomeSubG 683
MMNbrHomeSubU 683
MMNbrSubPmmConnected 684
MMNbrVisitingForeignG 684
MMNbrVisitingForeignU 684
MMNbrVisitingNatSubG 685
MMNbrVisitingNatSubU 685
MMSuccCombiInterSgsnRaUpdateG 685
MMSuccCombiIntraSgsnRaUpdateG 685
MMSuccGprsDetachSgsnG 686
MMSuccGprsDetachSgsnU 686
MMSuccNormalIntraSgsnRaUpdateG 686
MMSuccNormalIntraSgsnRaUpdateU 686
MMUnsuccAttachCC11G 687
MMUnsuccAttachCC11U 687
MMUnsuccAttachCC13G 687
MMUnsuccAttachCC13U 688
MMUnsuccAttachCC14U 688
MMUnsuccAttachCC15G 688
MMUnsuccAttachCC15U 688
MMUnsuccAttachCC17G 689
MMUnsuccAttachCC17U 689
MMUnsuccAttachCC22G 689
MMUnsuccAttachCC22U 690
MMUnsuccAttachCC7G 690
MMUnsuccAttachCC7U 690
MMUnsuccAttachCC8U 690
MMUnsuccAttachCSPSCoordU 691
MMUnsuccAttachLicenseExceeded 691

Updated: 2009-07-22

MMUnsuccInterSgsnRauCC10G 691
MMUnsuccInterSgsnRauCC10U 692
MMUnsuccInterSgsnRauCC14G 692
MMUnsuccInterSgsnRauCC14U 692
MMUnsuccInterSgsnRauCC15G 693
MMUnsuccInterSgsnRauCC15U 693
MMUnsuccInterSgsnRauCC17G 693
MMUnsuccInterSgsnRauCC17U 694
MMUnsuccInterSgsnRauCC9G 694
MMUnsuccInterSgsnRauCC9U 694
MMUnsuccInterSgsnRauG 695
MMUnsuccInterSgsnRauU 695
MMUnsuccIntraSgsnRauCC14G 695
MMUnsuccIntraSgsnRauCC14U 696
MMUnsuccIntraSgsnRauCC15G 696
MMUnsuccIntraSgsnRauCC15U 696
MMUnsuccIntraSgsnRauCC17G 697
MMUnsuccIntraSgsnRauCC17U 697
MMUnsuccIntraSgsnRAUCSPSCoordU 697
MMUnsuccIntraSgsnRauG 698
MMUnsuccIntraSgsnRauU 698
MMUnsuccISRAUCSPSCoordU 698
MMUnsuccServiceReq 699
MMUnsuccServiceReqU 699
nbrLlcFramesReceived 699
nbrLlcFramesSent 700
nbrOfAttachedSub 700
nbrOfBlackAnswerInSgsn 700
nbrOfCheckIMEIRequest 701
nbrOfGreyAnswerInSgsn 701
nbrOfSubReady 701
nbrOfSubStandby 702
nbrOfUnknownAnswerInSgsn 702
nbrOfWhiteAnswerInSgsn 702
nbrSubsWithActivePdpInSgsn 703
NoOfRunDialTot 703
NoOfRunOpTot 703
PDPcreations 704
pmReadingsPerHour 704
pmReadingsPerOccasion 704
QoSAttActConvsPdpContextG 705
QoSAttActConvsPdpContextU 705
QoSAttActInteractPdpContextG 705
QoSAttActInteractPdpContextU 706
QoSAttActStreamingPdpContextG 706
QoSAttActStreamingPdpContextU 706
QoSBackgroundAttRabAssU 707
QoSBackgroundSuccRabAssU 707
QoSConversationalAttRabAssU 707
QoSConversationalSuccRabAssU 708
QoSCurrentGuaranteedBitRate 708

© Copyright IBM Corp. 2008, 2009. All Rights Reserved.

QoSCurrentGuaranteedBitRateG 708
QoSCurrentGuaranteedBitRateU 709
QoSDLBackgroundPktDiscardedG 709
QoSDLBackgroundPktDiscardedU 709
QoSDLBackgroundPktForwardedG 710
QoSDLBackgroundPktForwardedU 710
QoSDLConvsPktDiscardedG 710
QoSDLConvsPktDiscardedU 711
QoSDLConvsPktForwardedG 711
QoSDLConvsPktForwardedU 711
QoSDLInteractivePktDiscardedG 711
QoSDLInteractivePktDiscardedU 712
QoSDLInteractivePktForwardedG 712
QoSDLInteractivePktForwardedU 712
QosDLStreamingPktDiscardedG 713
QoSDLStreamingPktDiscardedU 713
QosDLStreamingPktForwardedG 713
QoSDLStreamingPktForwardedU 714
QoSGuaBitRateDowngradesG 714
QoSGuaBitRateDowngradesU 714
QoSGuaranteedBitRateAttemptsG 715
QoSGuaranteedBitRateAttemptsU 715
QoSInteractiveAttRabAssU 716
QoSInteractiveReSentRabAssU 716
QoSInteractiveSuccRabAssU 716
QoSNbrActConvsPdpContextG 717
QoSNbrActConvsPdpContextU 717
QoSNbrActInteractPdpContextG 717
QoSNbrActInteractPdpContextU 717
QoSNbrActStreamingPdpContextG 718
QoSNbrActStreamingPdpContextU 718
QoSStreamingAttRabAssU 718
QoSStreamingReSentRabAssU 719
QoSStreamingSuccRabAssU 719
QoSULBackgroundPktForwarded 719
QoSULConvsPktForwarded 720
QoSULInteractivePktForwarded 720
QoSULStreamingPktForwarded 720
Release_SNMP_GGSN 721
RELOCAttInterSGSN 721
RELOCAttInterSGSNNew 721
RELOCAttIntraSGSN 722
RELOCFailInterSGSNInt 722
RELOCFailIntraSGSNInt 722
RELOCSuccInterSGSN 723
RELOCSuccInterSGSNNew 723
RELOCSuccIntraSGSN 723
S_PayloadgtpuErrorPkt 724
S_PayloadgtpuInDataOctGn 724
S_PayloadgtpuInDataOctIu 724
S_PayloadgtpuInDataPktGn 724

Updated: 2009-07-22

S_PayloadgtpuInDataPktIu 724
S_PayloadgtpuOutDataOctGn 724
S_PayloadgtpuOutDataOctIu 724
S_PayloadgtpuOutDataPktGn 725
S_PayloadgtpuOutDataPktIu 725
SECAttAuthProcsSgsnSimG 725
SECAttAuthProcsSgsnSimU 725
SECAttAuthProcsSgsnUsimG 726
SECAttAuthProcsSgsnUsimU 726
SECAttContextRequestFromPsgsnG 726
SECAttContextRequestFromPsgsnU 726
SECAttContextRequestToPsgsnG 727
SECAttContextRequestToPsgsnU 727
SECAttIdentityReqImsiU 727
SECAttSecMode 728
SECRecPOAuthFailSgsnG 728
SECRecPOAuthFailSgsnU 728
SECSuccAuthProcsSgsnSimG 729
SECSuccAuthProcsSgsnSimU 729
SECSuccAuthProcsSgsnUsimG 729
SECSuccAuthProcsSgsnUsimU 729
SECSuccContextRequestToPsgsnG 730
SECSuccContextRequestToPsgsnU 730
SECSuccIdentityReqImsiU 730
SECSuccSecMode 731
Shared 731
SMActPdpContextRedirectToDefaultApnU 731
SMActPdpContextRedirectToSubscribedApnU 732
SMActPdpContRedirToDefApnG 732
SMActPdpContRedirToSubsApnG 732
SMAttActPdpContextDynU 733
SMAttActPdpContextG 733
SMAttActPdpContextSgsnHomeG 733
SMAttActPdpContextSgsnHomeU 734
SMAttActPdpContextU 734
SMAttActSecondPdpContextG 734
SMAttActSecondPdpContextU 734
SMAttDeactPdpContextGgsnG 735
SMAttDeactPdpContextGgsnU 735
SMAttDeactPdpContextMsG 736
SMAttDeactPdpContextMsU 736
SMAttDeactPdpContextSgsnCC38G 736
SMAttDeactPdpContextSgsnCC38U 737
SMAttDeactPdpContextSgsnCC39G 737
SMAttDeactPdpContextSgsnCC39U 737
SMAttDeactPdpContextSgsnG 738
SMAttDeactPdpContextSgsnU 738
SMAttModPdpContextMsG 738
SMAttModPdpContextMsU 739
SMAttModPdpContextSgsnG 739
SMAttModPdpContextSgsnU 739

© Copyright IBM Corp. 2008, 2009. All Rights Reserved.

SMAttRabAssignment 740
SMAttRabModPS 740
SMAttUpdPdpContextGgsnG 740
SMAttUpdPdpContextGgsnU 741
SMAttUpdPdpContextSgsnG 741
SMAttUpdPdpContextSgsnU 741
SMDeactivatedPDPContextOldSgsnG 741
SMDeactivatedPDPContextOldSgsnU 742
SMNbrActivePdpPerSgsnU 742
SMNbrActivePDPsApprFor3GDTU 742
SMNbrActPdpContextU 743
SMNbrActSessions 743
SMNotDeactivatedPDPContextOldSgsnG 743
SMNotDeactivatedPDPContextOldSgsnU 744
SMPdpContextsLostG 744
SMPdpContextsLostU 744
SMSAttMoPSG 745
SMSAttMoPSU 745
SMSAttMtPSG 745
SMSAttMtPSU 745
SMSSuccMoPSG 746
SMSSuccMoPSU 746
SMSSuccMtPSG 746
SMSSuccMtPSU 747
SMSuccActPdpContextDynU 747
SMSuccActPdpContextSgsnHomeG 747
SMSuccActPdpContextSgsnHomeU 747
SMSuccActPdpContextU 748
SMSuccActSecondPdpContextG 748
SMSuccActSecondPdpContextU 748
SMSuccDeactPdpContextGgsnG 749
SMSuccDeactPdpContextGgsnU 749
SMSuccDeactPdpContextMsG 749
SMSuccDeactPdpContextMsU 750
SMSuccDeactPdpContextSgsnG 750
SMSuccDeactPdpContextSgsnU 750
SMSuccModPdpContextMsG 751
SMSuccModPdpContextMsU 751
SMSuccModPdpContextSgsnU 751
SMSuccRabAssignment 752
SMSuccUpdPdpContextGgsnG 752
SMSuccUpdPdpContextGgsnU 752
SMSuccUpdPdpContextSgsnG 753
SMSuccUpdPdpContextSgsnU 753
SMUnsuccActPdpContextCamelG 753
SMUnsuccActPdpContextCamelU 754
SMUnsuccActPdpContextCC26G 754
SMUnsuccActPdpContextCC26U 754
SMUnsuccActPdpContextCC27_28G 755
SMUnsuccActPdpContextCC27_28U 755
SMUnsuccActPdpContextCC29G 755

Updated: 2009-07-22

SMUnsuccActPdpContextCC29U 756
SMUnsuccActPdpContextCC32_33G 756
SMUnsuccActPdpContextCC32_33U 756
SMUnsuccActPdpContextCC38G 756
SMUnsuccActPdpContextCC38U 757
SMUnsuccActPdpContextLicenseExceeded 757
SMUnsuccActPdpContextU 758
ss7_ADP1_MessageOrigUDT 758
ss7_ADP1_MessageOrigXUDT 758
ss7_ADP1_MessageTermUDT 758
SS7_ADP1_MessageTermXUDT 758
ss7_ADP1_MSUDiscardError 759
ss7_ADP1_ProtocolErrorComp 759
ss7_ADP1_ProtocolErrorTraA 759
ss7_ADP1_ProtocolErrorTraD 759
ss7_ADP1_SLFailure 759
ss7_ADP1_SLRestoration 759
ss7_ADP1_SPInaccess 759
ss7_ADP1_TCMessageReceive 760
ss7_ADP1_TCMessageSent 760
ss7AssocAvlForUP 760
ss7AssocUnavlForUP 760
ss7MessageDiscardedOPCScreening 761
ss7MessageOrigUDT 761
ss7MessageOrigXUDT 761
ss7MessageTermUDT 762
ss7MessageTermXUDT 762
ss7MSUDiscardError 762
ss7ProtocolErrorComp 762
ss7ProtocolErrorTraA 763
ss7ProtocolErrorTraD 763
ss7SLFailure 763
ss7SLRestoration 764
ss7SPInaccess 764
ss7TCMessageReceive 764
ss7TCMessageSent 765
subscribersInTransitionalState 765
succActPdpContextDynMsPerSgsn 765
succActPdpContextMSPerSgsn 766
succAuthInSgsn 766
succCombiAttach 766
succGprsAttach 767
succGprsAttachUmts 767
succGprsAttachVisitor 767
succGprsDetachSgsn 768
succGprsDetachSgsnUmts 768
succIdentityReq 768
succImsiAttach 769
succInterSgsnRaUpdate 769
succInterSgsnRaUpdateUmts 769
succInterSgsnRaUpdateVisitor 770

© Copyright IBM Corp. 2008, 2009. All Rights Reserved.

succIntraSgsnRaUpdate 770
succIntraSgsnRaUpdateUmts 770
succPacketSwitchingPagingUmts 771
succReqAuthSetsHlr 771
SYSPayloadAllocationFailureG 771
SYSPayloadAllocationFailureU 772
unsuccGprsAttachUmts 772
unsuccPacketSwitchingPaging 772
unsuccPacketSwitchPagingUmts 773
uplinkSndcpNpduReceived 773
uplinkSndcpOctetReceivedMode 773
GSN_MM_Index Primitive Calculations 774
GRAPHmultiLineSeparator 774
NUMDAYS 774
NUMHOURS 774
UnknownEnterpriseField 774
GSN_MM_Index Peg Counts 774
AttGprsAttachG 774
AttGprsDetachMsG 775
AttInterSgsnRaUpdateG 775
AttIntraSgsnRaUpdateG 775
collectionPeriod 776
GSNRelease 776
MMAttCombiInterSgsnRaUpdateG 776
MMAttCombiIntraSgsnRaUpdateG 776
MMAttGprsAttachU 777
MMAttGprsDetachMsU 777
MMAttGprsDetachSgsnG 777
MMAttGprsDetachSgsnU 777
MMAttImsiCombiInterSgsnRAUpdaG 778
MMAttImsiCombiIntraSgsnRAUpdaG 778
MMAttInterSgsnRaUpdateU 778
MMAttIntraSgsnRaUpdateU 778
MMAttNormalIntraSgsnRaUpdateG 779
MMAttNormalIntraSgsnRaUpdateU 779
MMAttPsPagingProcGb 779
MMAttPsPagingProcIu 780
MMNbrActAttachedSubRAG 780
MMNbrActAttachedSubRAU 780
MMSuccCombiInterSgsnRaUpdateG 781
MMSuccCombiIntraSgsnRaUpdateG 781
MMSuccFirstPsPagingGb 781
MMSuccGprsAttachU 782
MMSuccGprsDetachSgsnG 782
MMSuccGprsDetachSgsnU 782
MMSuccInterSgsnRaUpdateU 783
MMSuccIntraSgsnRaUpdateU 783
MMSuccNormalIntraSgsnRaUpdateG 783
MMSuccNormalIntraSgsnRaUpdateU 784
MMSuccPsPagingProcGb 784
MMSuccPsPagingProcIu 784

Updated: 2009-07-22

SuccGprsAttachG . . . 784
SuccInterSgsnRaUpdateG . . . 785
SuccIntraSgsnRaUpdateG . . . 785
GSN_OvrProtect Primitive Calculations . . . 785
GRAPHmultiLineSeparator . . . 785
NUMDAYS . . . 786
NUMHOURS . . . 786
UnknownEnterpriseField . . . 786
GSN_OvrProtect Peg Counts . . . 786
collectionPeriod . . . 786
gsnOverloadProtectionSs7MessageReject . . . 786
GSNRelease . . . 787
GSN_SM_Index Primitive Calculations . . . 787
GRAPHmultiLineSeparator . . . 787
NUMDAYS . . . 787
NUMHOURS . . . 787
GSN_SM_Index Peg Counts . . . 787
collectionPeriod . . . 787
GSNRelease . . . 788
SMAttActPdpContextRaG . . . 788
SMAttActPdpContextRaU . . . 788
SMSuccActPdpContextRaG . . . 789
SMSuccActPdpContextRaU . . . 789
GSNType Primitive Calculations . . . 789
GRAPHmultiLineSeparator . . . 789
NUMDAYS . . . 789
NUMHOURS . . . 790
UnknownEnterpriseField . . . 790
Interface Primitive Calculations . . . 790
ATMAAL5LenErrPkts . . . 790
ATMAAL5NoBufDropPktsRate . . . 790
ATMAAL5TimeoutPkts . . . 790
ATMAAL5VCQueueDropsPktsRate . . . 791
ATMavgPktsSizeIn . . . 791
ATMavgPktsSizeOut . . . 791
ATMHeaderCheckSeqCorrRate . . . 791
ATMHeaderCheckUnCorrErrRate . . . 791
ATMIdelCellRate . . . 791
ATMNoBufferOAMFailRate . . . 792
ATMoverrunFIFORecieveRate . . . 792
ATMoverrunFIFOTransmitRate . . . 792
ATMTotalAAL5PacketsDropped . . . 792
ATMunderrunFIFORecieveRate . . . 792
ATMVCTailQueuePktDropRate . . . 792
ATMVirtuConnecFailRate . . . 793
GRAPHmultiLineSeparator . . . 793
IfAccuracy . . . 793
ifInDiscardRate . . . 793
ifInErrorsRate . . . 793
ifInPkts . . . 793

© Copyright IBM Corp. 2008, 2009. All Rights Reserved.

ifOutDiscardRate 794
ifOutErrorsRate 794
ifOutPkts 794
InterfaceBalance_GSN 794
InterfaceGOS 794
InterfaceThrouputRx 794
InterfaceThrouputRx_GSN 795
InterfaceThrouputTx 795
InterfaceThrouputTx_GSN 795
NUMDAYS 795
NUMHOURS 795
PacketDiscardRate_GSN 795
pInUtilization 795
pPktDis 796
pPktQue 796
UnknownEnterpriseField 796
Interface Peg Counts 796
collectionPeriod 796
collectionPeriod_SNMP_GGSN 796
filterIpsecPackets_IPSecFilter_in_21 797
filterIpsecPackets_IPSecFilter_out_21 797
filterIpsecPackets_normalFilter_in_21 797
filterIpsecPackets_normalFilter_out_21 798
filterPacketsAllowed_IPSecFilter_in_21 798
filterPacketsAllowed_IPSecFilter_out_21 798
filterPacketsAllowed_normalFilter_in_21 798
filterPacketsAllowed_normalFilter_out_21 799
filterPacketsDenied_IPSecFilter_in_21 799
filterPacketsDenied_IPSecFilter_out_21 799
filterPacketsDenied_normalFilter_in_21 800
filterPacketsDenied_normalFilter_out_21 800
GSNRelease 800
ifChassisChannel 801
ifChassisLogicalUnit 801
ifInDiscards 801
ifInOctets 802
ifInOctets_CPU2 802
ifInOctets_CPU3 802
ifInOctets_CPU4 802
ifInPkts_CPU2 803
ifInPkts_CPU3 803
ifInPkts_CPU4 803
ifInUcastPkts 804
ifOutDiscards 804
ifOutDiscards_CPU2 804
ifOutDiscards_CPU3 805
ifOutDiscards_CPU4 805
ifOutOctets 805
ifOutOctets_CPU2 806
ifOutOctets_CPU3 806
ifOutOctets_CPU4 806

ifOutPkts_CPU2 807
ifOutPkts_CPU3 807
ifOutPkts_CPU4 807
ifOutQlen 808
ifOutQlen_CPU2 808
ifOutQlen_CPU3 808
ifOutQlen_CPU4 808
ifOutUcastPkts 809
jnxAtmIfCorrHCSErrs 809
jnxAtmIfInBadCrcs 809
jnxAtmIfInInvalidVCCells 810
jnxAtmIfInLenErrPkts 810
jnxAtmIfInNoBufDropPkts 810
jnxAtmIfInNoBufferOAMCells 811
jnxAtmIfInTimeoutPkts 811
jnxAtmIfOutVCQueueDrops 811
jnxAtmIfRxCellCount 812
jnxAtmIfRxCellFIFOOverRuns 812
jnxAtmIfRxCellFIFOUnderRuns 812
jnxAtmIfTxCellCount 813
jnxAtmIfTxCellFIFOOverRuns 813
jnxAtmIfTxIdleCellCount 813
jnxAtmIfUncorrHCSErrs 813
jnxifAdminStatus 814
jnxifHCIn1SecRate 814
jnxifHCInBroadcastPkts 814
jnxifHCInMulticastPkts 815
jnxifHCInOctets 815
jnxifHCInUcastPkts 815
jnxifHCOut1SecRate 816
jnxifHCOutBroadcastPkts 816
jnxifHCOutMulticastPkts 816
jnxifHCOutOctets 817
jnxifHCOutUcastPkts 817
jnxifHighSpeed 817
jnxifIn1SecOctets 818
jnxifIn1SecPkts 818
jnxifIn1SecRate 818
jnxifInBroadcastPkts 819
jnxifInDiscards 819
jnxifInErrors 819
jnxifInMulticastPkts 820
jnxifInOctets 820
jnxifInUcastPkts 820
jnxifInUnknownProtos 821
jnxifMtu 821
jnxifOut1SecOctets 821
jnxifOut1SecPkts 822
jnxifOut1SecRate 822
jnxifOutBroadcastPkts 822
jnxifOutDiscards 823

© Copyright IBM Corp. 2008, 2009. All Rights Reserved.

jnxifOutErrors . . . 823
jnxifOutMulticastPkts . . . 823
jnxifOutOctets . . . 824
jnxifOutQLen . . . 824
jnxifOutUcastPkts . . . 824
jnxifSpeed . . . 825
jnxPMonAllocPerSecond . . . 825
jnxPMonCurrentActiveFlows . . . 825
jnxPMonFlowAllocFailures . . . 826
jnxPMonFlowFreeFailures . . . 826
jnxPMonFlowMaxAlloc . . . 826
jnxPMonFlowTotalAlloc . . . 827
jnxPMonFlowTotalFree . . . 827
jnxPMonFreeListFailures . . . 827
jnxPMonFreePerSecond . . . 827
jnxPMonNoMemDrops . . . 828
jnxPMonNotIPDrops . . . 828
jnxPMonNotIPv4Drops . . . 828
jnxPMonTenSecondAverageFlowBytes . . . 829
jnxPMonTenSecondAverageFlowPackets . . . 829
jnxPMonTooSmallDrops . . . 829
jnxPMonTotalFlows . . . 830
jnxPMonTotalFlowsAged . . . 830
jnxPMonTotalFlowsBytes . . . 830
jnxPMonTotalFlowsExpired . . . 831
jnxPMonTotalFlowsExported . . . 831
jnxPMonTotalFlowsPackets . . . 831
jnxPMonTotalFlowsPacketsExported . . . 831
jnxPMonTotalMemoryFree . . . 832
jnxPMonTotalMemoryUsed . . . 832
Release_SNMP_GGSN . . . 832
Net_BGPPeerIP Primitive Calculations . . . 833
GRAPHmultiLineSeparator . . . 833
NUMDAYS . . . 833
NUMHOURS . . . 833
Net_BGPPeerIP Peg Counts . . . 833
bgpPeerInTotalMessages . . . 833
bgpPeerInUpdates . . . 834
bgpPeerOutTotalMessages . . . 834
bgpPeerOutUpdates . . . 834
collectionPeriod . . . 835
GSNRelease . . . 835
PeerFsmEstablishedTransitions . . . 835
PeerInUpdateElapsedTime . . . 835
Net_OSPFArea Primitive Calculations . . . 836
GRAPHmultiLineSeparator . . . 836
NUMDAYS . . . 836
NUMHOURS . . . 836
Net_OSPFArea Peg Counts . . . 836
collectionPeriod . . . 836

GSNRelease 836
ospfAreaBdrRtrCount 836
ospfAreaLsaCount 837
ospfAsBdrRtrCount 837
ospfRxNewLsas 837
ospfSpfRuns 838
Net_OSPFInterface Primitive Calculations 838
GRAPHmultiLineSeparator 838
NUMDAYS 838
NUMHOURS 838
Net_OSPFInterface Peg Counts 839
collectionPeriod 839
GSNRelease 839
ospfIfEvents 839
Net_OSPFNeighIP Primitive Calculations 839
GRAPHmultiLineSeparator 839
NUMDAYS 839
NUMHOURS 840
Net_OSPFNeighIP Peg Counts 840
collectionPeriod 840
GSNRelease 840
ospfNbrEvents 840
Network Primitive Calculations 840
GRAPHmultiLineSeparator 841
NUMDAYS 841
NUMHOURS 841
Network Peg Counts 841
collectionPeriod 841
GSNRelease 841
ospfExternLsaCount 841
ospfOriginateNewLsas 842
ospfRxNewLsas 842
NSVC Primitive Calculations 842
GRAPHmultiLineSeparator 842
NUMDAYS 843
NUMHOURS 843
NSVC Peg Counts 843
collectionPeriod 843
GSNRelease 843
nsDownlinkPackets 843
nsDownlinkPacketsDiscarded 844
OSPFArea Primitive Calculations 844
GRAPHmultiLineSeparator 844
NUMDAYS 844
NUMHOURS 844
UnknownEnterpriseField 845
OSPFArea Peg Counts 845
collectionPeriod 845
GSNRelease 845
ospfAreaBdrRtrCount 845

© Copyright IBM Corp. 2008, 2009. All Rights Reserved.

ospfAreaLsaCount 845
ospfAsBdrRtrCount 846
ospfRxNewLsas_R30 846
ospfSpfRuns 846
OSPFInterface Primitive Calculations 847
GRAPHmultiLineSeparator 847
NUMDAYS 847
NUMHOURS 847
UnknownEnterpriseField 847
OSPFInterface Peg Counts 847
collectionPeriod 848
GSNRelease 848
ospfIfEvents 848
OSPFNeighIP Primitive Calculations 848
GRAPHmultiLineSeparator 848
NUMDAYS 848
NUMHOURS 849
UnknownEnterpriseField 849
OSPFNeighIP Peg Counts 849
collectionPeriod 849
GSNRelease 849
ospfNbrEvents 849
PIU Primitive Calculations 850
GRAPHmultiLineSeparator 850
NUMDAYS 850
NUMHOURS 850
UnknownEnterpriseField 850
PIU Peg Counts 850
collectionPeriod 850
gsnCpuUsageGPB 850
gsnCpuUsageIB 851
GSNRelease 851
SYSgsnCpuUsage 851
SYSgsnMemUsage 852
RA_GSN Primitive Calculations 852
GRAPHmultiLineSeparator 852
NUMDAYS 852
NUMHOURS 852
SuccGprsAttachRate 853
SuccIntraSgsnRaUpdate 853
RA_GSN Peg Counts 853
GSN_RELEASE 853
MMAttGprsAttachU 853
MMAttGprsDetachMsU 853
MMAttGprsDetachSgsnU 854
MMAttInterSgsnRaUpdateU 854
MMAttIntraSgsnRaUpdateU 854
MMSuccGprsAttachU 854
MMSuccInterSgsnRaUpdateU 854
MMSuccIntraSgsnRaUpdateU 855

PERLENSEC 855
SecAssoc Primitive Calculations 855
GRAPHmultiLineSeparator 855
NUMDAYS 855
NUMHOURS 855
UnknownEnterpriseField 856
SecAssoc Peg Counts 856
collectionPeriod 856
GSNRelease 856
ipsecSACurrentBytes_R30 856
ipsecSAPacketsNotOk_R30 856
ipsecSAPacketsOk_R30 857
SecAssoc_Card Primitive Calculations 857
GRAPHmultiLineSeparator 857
NUMDAYS 857
NUMHOURS 857
UnknownEnterpriseField 858
SecAssoc_Card Peg Counts 858
collectionPeriod 858
GSNRelease 858
ipsecSACurrentBytes_R21 858
ipsecSAPacketsNotOk_R21 858
ipsecSAPacketsOk_R21 859
SGSN_GGSN Primitive Calculations 859
GRAPHmultiLineSeparator 859
NUMDAYS 859
NUMHOURS 859
pSGSN_GGSNdropPackRatedown 860
pSGSN_GGSNdropPackRateup 860
pSGSN_GGSNpacksizeDown 860
pSGSN_GGSNpacksizeUp 860
UnknownEnterpriseField 860
SGSN_GGSN Peg Counts 860
collectionPeriod 860
collectionPeriod_SNMP_GGSN 861
ggsnSgsn_err_ind_recvd 861
ggsnSgsn_err_ind_trans 861
ggsnSgsnDownlinkBytes 862
ggsnSgsnDownlinkBytes_jn 862
ggsnSgsnDownlinkDrops 862
ggsnSgsnDownlinkDrops_jn 863
ggsnSgsnDownlinkPackets 863
ggsnSgsnDownlinkPackets_jn 863
ggsnSgsnUplinkBytes 864
ggsnSgsnUplinkBytes_jn 864
ggsnSgsnUplinkDrops 864
ggsnSgsnUplinkDrops_jn 865
ggsnSgsnUplinkPackets 865
ggsnSgsnUplinkPackets_jn 865
GSNRelease 866

© Copyright IBM Corp. 2008, 2009. All Rights Reserved.

Release_SNMP_GGSN . . . 866
SrcClass Primitive Calculations . . . 866
GRAPHmultiLineSeparator . . . 866
NUMDAYS . . . 867
NUMHOURS . . . 867
UnknownEnterpriseField . . . 867
SrcClass Peg Counts . . . 867
collectionPeriod . . . 867
GSNRelease . . . 867
jnxScuStatsBytes . . . 868
jnxScuStatsPackets . . . 868
SS7 Primitive Calculations . . . 868
GRAPHmultiLineSeparator . . . 869
NUMDAYS . . . 869
NUMHOURS . . . 869
UnknownEnterpriseField . . . 869
SS7 Peg Counts . . . 869
collectionPeriod . . . 869
GSNRelease . . . 869
NoOfCurrRunConnTot . . . 870
NoOfIncSegMes . . . 870
NoOfRunDialTot . . . 870
NoOfRunOpTot . . . 870
ss7MessageOrigCR . . . 871
ss7MessageOrigDT1 . . . 871
ss7MessageOrigRLSD . . . 871
ss7MessageOrigUDT . . . 872
ss7MessageOrigXUDT . . . 872
ss7MessageTermCR . . . 872
ss7MessageTermDT1 . . . 873
ss7MessageTermRLSD . . . 873
ss7MessageTermUDT . . . 873
ss7MessageTermXUDT . . . 873
ss7MSUDiscardError . . . 874
ss7ProtocolErrorComp . . . 874
ss7ProtocolErrorTraA . . . 874
ss7ProtocolErrorTraD . . . 875
ss7SLFailure . . . 875
ss7SLRestoration . . . 875
ss7SPInaccess . . . 875
ss7TCMessageReceive . . . 876
ss7TCMessageSent . . . 876
SS7Association Primitive Calculations . . . 876
GRAPHmultiLineSeparator . . . 876
NUMDAYS . . . 877
NUMHOURS . . . 877
UnknownEnterpriseField . . . 877
SS7Association Peg Counts . . . 877
ss7MessageReceivedPerAssociation . . . 877
ss7MessageSentPerAssociation . . . 878

Updated: 2009-07-22

ss7OctetsReceivedPerAssociation 878
ss7OctetsSentPerAssociation 878
SSN Primitive Calculations 879
GRAPHmultiLineSeparator 879
NUMDAYS 879
NUMHOURS 879
SSN Peg Counts 879
ss7NoOfRunDialPerSsn 879
ss7NoOfRunOpPerSsn 879
System Primitive Calculations 880
GRAPHmultiLineSeparator 880
NUMDAYS 880
NUMHOURS 880
PercentActiveSubscribers 880
PercentRegisteredSubscribers 880
pTotalGGSNPacketSuccessRate 880
pTotalSessionManSuccessRateGGSN 881
RegisteredInroamers 881
RegisteredOutroamer 881
SubscribersHLR 881
SubscribersVLR 881
TotalCellTCHTraffic 881
TotalSwitchedTraffic 881
TA_Name Primitive Calculations 882
GRAPHmultiLineSeparator 882
NUMDAYS 882
NUMHOURS 882
UnknownEnterpriseField 882
TA_Name Peg Counts 882
collectionPeriod 882
greTaCurrentBytes 883
greTaPacketsNotOk 883
greTaPacketsOk 883
GSNRelease 883
TimeSlot Primitive Calculations 884
GRAPHmultiLineSeparator 884
NUMDAYS 884
NUMHOURS 884
TimeSlot Peg Counts 884
ss7MessageReceivedPerLinkNb6 884
ss7MessageSentPerLinkNb 885
ss7OctetsReceivedPerLinkNb 885
ss7OctetsSentPerLinkNb 885
ss7SLFailureNb 885
ss7SLRestorationNb 886
Trunk Primitive Calculations 886
GRAPHmultiLineSeparator 886
NUMDAYS 886
NUMHOURS 886
PVCThroughputRx 887

© Copyright IBM Corp. 2008, 2009. All Rights Reserved.

PVCThroughputTx 887
TrunkGOS 887
UnknownEnterpriseField 887
Trunk Peg Counts 887
collectionPeriod 887
frWanLmiErrors 887
frWanLmiTimeouts 888
frWanLmiWanFlows 888
frWanRxAsynchs 888
frWanRxBytes 889
frWanRxCLLMs 889
frWanRxDrops 889
frWanRxFrames 890
frWanRxFullStat 890
frWanRxInvDLCI 890
frWanRxInvRq 891
frWanRxLmiPolls 891
frWanRxSeqOnly 891
frWanRxTooBig 891
frWanRxUnattDLCIs 892
frWanTxBytes 892
frWanTxDrops 892
frWanTxFrames 893
frWanTxFullStat 893
frWanTxInvRq 893
frWanTxLmiPolls 894
frWanTxNoBuff 894
frWanTxSeqOnly 894
frWanTxStops 895
frWanWanFlows 895
GSNRelease 895
hdlcRxErrAbort 895
hdlcRxErrAbort_SubSlot3 896
hdlcRxErrAbort_SubSlot4 896
hdlcRxErrBusy 896
hdlcRxErrBusy_SubSlot3 897
hdlcRxErrBusy_SubSlot4 897
hdlcRxErrCRC 897
hdlcRxErrCRC_SubSlot3 898
hdlcRxErrCRC_SubSlot4 898
hdlcRxErrLackOfBufs 898
hdlcRxErrLackOfBufs_SubSlot3 899
hdlcRxErrLackOfBufs_SubSlot4 899
hdlcRxErrMaxFrameLen 899
hdlcRxErrMaxFrameLen_SubSlot3 900
hdlcRxErrMaxFrameLen_SubSlot4 900
hdlcRxErrNonOctetAlign 900
hdlcRxErrNonOctetAlign_SubSlot3 900
hdlcRxErrNonOctetAlign_SubSlot4 901
hdlcRxErrQueue 901
hdlcRxErrQueue_SubSlot3 901

Updated: 2009-07-22

hdlcRxErrQueue_SubSlot4 902
hdlcRxOctets 902
hdlcRxOctets_SubSlot3 902
hdlcRxOctets_SubSlot4 903
hdlcRxOK 903
hdlcRxOK_SubSlot3 903
hdlcRxOK_SubSlot4 904
hdlcTxOctets 904
hdlcTxOctets_SubSlot3 904
hdlcTxOctets_SubSlot4 904
hdlcTxOK 905
hdlcTxOK_SubSlot3 905
hdlcTxOK_SubSlot4 905
pppIBytes 906
pppIErrors 906
pppIPackets 906
pppIPRcvd 907
pppIPSent 907
pppOBytes 907
pppOErrors 908
pppOPackets 908
VirtualChannel Primitive Calculations 908
GRAPHmultiLineSeparator 908
NUMDAYS 908
NUMHOURS 909
UnknownEnterpriseField 909
VirtualChannel Peg Counts 909
aal5VccCrcErrors 909
aal5VccOverSizedSDUs 909
aal5VccSarTimeOuts 910
collectionPeriod 910
GSNRelease 910
jnxAtmVCConnType 911
jnxAtmVCEncapsulation 911
jnxAtmVCInBytes 911
jnxAtmVCInOAMF5AISCells 912
jnxAtmVCInOAMF5LoopCells 912
jnxAtmVCInOAMF5RDICells 912
jnxAtmVCInPkts 912
jnxAtmVCOAMDownCellCount 913
jnxAtmVCOAMPeriod 913
jnxAtmVCOAMUpCellCount 913
jnxAtmVCOutBytes 914
jnxAtmVCOutOAMF5LoopCells 914
jnxAtmVCOutOAMF5RDICells 914
jnxAtmVCOutPkts 915
jnxAtmVCTailQueuePktDrops 915
jnxAtmVCTotalDownTime 915
ss7MessageReceivedPerLinkBb 916
ss7MessageSentPerLinkBb5 916
ss7OctetsReceivedPerLinkBb 916

© Copyright IBM Corp. 2008, 2009. All Rights Reserved.

ss7OctetsSentPerLinkBb . . . 916
VirtualPath Primitive Calculations . . . 917
GRAPHmultiLineSeparator . . . 917
NUMDAYS . . . 917
NUMHOURS . . . 917
UnknownEnterpriseField . . . 917
VirtualPath Peg Counts . . . 917
collectionPeriod . . . 917
GSNRelease . . . 918
jnxAtmVpInBytes . . . 918
jnxAtmVpInOamF4AisCells . . . 918
jnxAtmVpInOamF4Cells . . . 919
jnxAtmVpInOamF4LoopCells . . . 919
jnxAtmVpInOamF4RdiCells . . . 919
jnxAtmVpInPkts . . . 920
jnxAtmVpOamDownCellCount . . . 920
jnxAtmVpOamPeriod . . . 920
jnxAtmVpOamUpCellCount . . . 921
jnxAtmVpOutBytes . . . 921
jnxAtmVpOutOamF4Cells . . . 921
jnxAtmVpOutOamF4LoopCells . . . 922
jnxAtmVpOutOamF4RdiCells . . . 922
jnxAtmVpOutPkts . . . 922
jnxAtmVpTotalDownTime . . . 922

9 HLR Traffic Entities . . . 925

10 HLR Traffic Fields . . . 927
BSG Primitive Calculations . . . 927
GRAPHmultiLineSeparator . . . 927
INTERVALS . . . 927
LocalName . . . 927
NUMDAYS . . . 927
NUMHOURS . . . 927
VENDORTECH . . . 928
BSG Peg Counts . . . 928
BSG_RELEASE . . . 928
NCUGBSG . . . 928
PERLEN . . . 928
rg_reap . . . 928
gsmSCF Primitive Calculations . . . 928
GRAPHmultiLineSeparator . . . 928
NUMDAYS . . . 929
NUMHOURS . . . 929
gsmSCF Peg Counts . . . 929
HLR_RELEASE . . . 929
NGSCFCAMEL . . . 929
NGSCFMMINT . . . 929
PERLEN . . . 929
HLR Primitive Calculations . . . 929
CP_LOAD% . . . 929

Updated: 2009-07-22

GRAPHmultiLineSeparator 929
INTERVALS 930
NUMDAYS 930
NUMHOURS 930
VENDORTECH 930
HLR Peg Counts 930
ACCLOAD 930
AQUEUEOVERF 931
BOTHCNT 931
CONNSECT 931
CREFREC 932
CREFSENT 932
CRREC 932
CRSENT 933
DMSU 933
DSIF 933
ERRREC 933
ERRSENT 934
GPODBINVCNT 934
GPRSCNT 934
HLR_RELEASE 935
IMSU 935
ISIF 935
LUDTREC 935
LUDTSENT 936
LUDTSREC 936
LUDTSSENT 936
MSGHAND 937
MSGPOL 937
MSGPOLREJ 937
MSGRCL0 938
MSGRCL1 938
MSGRQGT 938
MSGSCL0 938
MSGSCL1 939
MSINVDPC 939
MSINVSIO 939
NACCBLOT 940
NAUREQQUINT 940
NAUREQTRIP 940
NAUTIMSINOT 941
NAUTPARMAP 941
NAUTPARREC 941
NAUTPARREU 942
NAUTPARSEN 942
NAUTQUINPRO 942
NAUTQUINPROCS 943
NAUTQUINPROPS 943
NAUTREQMAP 943
NAUTREQQUE 943
NAUTSYFANOVALCS 944

© Copyright IBM Corp. 2008, 2009. All Rights Reserved.

NAUTSYFANOVALPS 944
NAUTSYFAVALCS 944
NAUTSYFAVALPS 945
NAUTSYNCFAIL 945
NAUTSYNFAI 945
NAUTTRIPPRO 946
NCAPREJCNT 946
NCAPREQCNT 946
NCPABLOT 947
NCPMBLOT 947
NCUGSENT 947
NFORLAPT 947
NFORLAPZ 948
NFORLMAN 948
NFORWSENT 948
NFTDIEX 949
NFTDMHI 949
NFTDMLO 949
NFTDNPRIO_HLR 950
NFTDORG 950
NFTDPRIO_HLR 950
NFTDTCAP 951
NLMUSUBSCNT 951
NLOSTCL 951
NLOSTRE 952
NLRGA 952
NLRGM 952
NMAUABLOT 953
NMAUF 953
NMAUMBLOT 953
NMOBSUBSCNT 953
NNOREC 954
NOFFIEX 954
NOFFMHI 954
NOFFMLO 955
NOFFNPRIO_HLR 955
NOFFORG 955
NOFFPRIO_HLR 956
NOFFTCAP 956
NONGPRSCNT 956
NPAG1SGSNTOT 957
NPAG2SGSNTOT 957
NPBITF 957
NPCPF 958
NREDOPCNT 958
NRELA 958
NRELM 959
NREQMEGAUT 959
NREQMEUAUT 959
NROAMSENT 960
NRSUBSCNT 960

Updated: 2009-07-22

NSCAN 960
NSGSNRESETREC 961
NSGSNRESETSENT 961
NSMLA 961
NSMLM 961
NSUBSCNT 962
NSUBSRSA 962
NTBITF 962
NTCPF 963
OCTRETRN 963
ODBINVCNT 963
ODBREGCNT 964
OMMSU 964
OMSIF 964
ONEPCNT 965
OUMSU 965
OUSIF 965
P95FPHGT 965
P95FPHNT 966
PERLEN 966
RFNETCONG 966
RFNETFAIL 966
RFSPADDR 967
RFSSNFAIL 967
RFSUADDR 967
RFUNEQUIP 968
RFUNQUAL 968
rg_reap 968
SAMPPHGT 968
SAMPPHNT 969
SIZEDS 969
SIZEPS 969
SIZERS 970
SUBSQUINT 970
SUBSTRIPL 970
SYERROR 971
TIMEPHGT 971
TIMEPHNT 971
TMMSU 971
TMSIF 972
TOTSCBUF1 972
TOTSCBUF2 972
TOTSCBUF3 973
TOTSCBUF4 973
TUMSU 973
TUSIF 974
UDTREC 974
UDTSENT 974
UDTSREC 975
UDTSSENT 975
XUDTREC 975

© Copyright IBM Corp. 2008, 2009. All Rights Reserved.

XUDTSENT . . . 975
XUDTSREC . . . 976
XUDTSSENT . . . 976
HLR_NI Primitive Calculations . . . 976
GRAPHmultiLineSeparator . . . 976
LocalName . . . 977
NUMDAYS . . . 977
NUMHOURS . . . 977
HLR_NI Peg Counts . . . 977
rg_reap . . . 977
HLR_SAE Primitive Calculations . . . 977
GRAPHmultiLineSeparator . . . 977
INTERVALS . . . 977
NUMDAYS . . . 978
NUMHOURS . . . 978
VENDORTECH . . . 978
HLR_SAE Peg Counts . . . 978
HLR_RELEASE . . . 978
ID1 . . . 978
ID2 . . . 979
NCALLS . . . 979
NIND . . . 979
NOVERFLOW . . . 979
NSCAN . . . 980
NTRAL . . . 980
NTRALACC . . . 980
PERLEN . . . 981
rg_reap . . . 981
HLR_SAE_Block Primitive Calculations . . . 981
GRAPHmultiLineSeparator . . . 981
NUMDAYS . . . 981
NUMHOURS . . . 981
HLR_SAE_Block Peg Counts . . . 981
rg_reap . . . 981
HLR_SPG Primitive Calculations . . . 982
GRAPHmultiLineSeparator . . . 982
NUMDAYS . . . 982
NUMHOURS . . . 982
HLR_SPG Peg Counts . . . 982
rg_reap . . . 982
HLR_SPNode Primitive Calculations . . . 982
GRAPHmultiLineSeparator . . . 982
INTERVALS . . . 982
NUMDAYS . . . 983
NUMHOURS . . . 983
VENDORTECH . . . 983
HLR_SPNode Peg Counts . . . 983
ACCFRPM . . . 983
ACCLOAD . . . 983
ACCSPIST . . . 984

DATALOSTFLAG 984
HLR_RELEASE 984
MAXFRPM 984
MINFRPM 985
NOLRGUPFMS 985
NOSMUPFMS 985
NPERREL 986
NPERRES 986
NRELA 986
NRELM 987
NRESA 987
NRESM 987
NSCAN 988
PERLEN 988
rg_reap 988
SIZEPM 988
HLR_SS7Dest Primitive Calculations 988
GRAPHmultiLineSeparator 988
INTERVALS 989
LocalName 989
NUMDAYS 989
NUMHOURS 989
VENDORTECH 989
HLR_SS7Dest Peg Counts 989
HLR_RELEASE 989
MSGSND 989
PERLEN 990
rg_reap 990
SYS7IND_HLR_C7SCSIGP 990
HLR_SS7HSLPrmGrp Primitive Calculations 990
GRAPHmultiLineSeparator 990
LocalName 990
NUMDAYS 991
NUMHOURS 991
VENDORTECH 991
HLR_SS7HSLPrmGrp Peg Counts 991
ALPHA 991
CNGABTH1 991
CNGABTH2 992
CNGABTH3 992
CNGDITH1 992
CNGDITH2 993
CNGDITH3 993
CNGONTH1 993
CNGONTH2 994
CNGONTH3 994
HLR_RELEASE 994
LT1UNACK 995
LTBLCKSZ 995
LTFORPRV 995

© Copyright IBM Corp. 2008, 2009. All Rights Reserved.

LTKPALIV 995
LTMAXPDU 996
LTMXIDLE 996
LTNOCRED 996
LTPRVPDU 997
LTPULLRT 997
LTSCCFAL 997
LTSCCOPR 998
LTSETALG 998
LTSTATLS 998
LTTAUERR 999
MONEREVT 999
MONINTER 999
NMXSDPDU 1000
NMXSTPDU 1000
NMXUNACK 1000
PDUSENTP 1000
PERLEN 1001
rg_reap 1001
SCCOPPDU 1001
THRSRUNQ 1001
HLR_SS7Link Primitive Calculations 1002
GRAPHmultiLineSeparator 1002
INTERVALS 1002
INTERVALS_C7TM 1002
LocalName 1002
NUMDAYS 1002
NUMHOURS 1002
VENDORTECH 1002
HLR_SS7Link Peg Counts 1003
ACHGOVRS 1003
ACHGOVRS_SS7HSLMT2 1003
ALGNFLRS_SS7HSLMT2 1003
ASLDUR 1004
CDISCONX_SS7HSLMT3 1004
CGSTEVL_SS7HSLMT1 1004
CGSTLEVL 1005
CGSTSTAT 1005
CGSTSTAT_SS7HSLMT1 1005
CHOVERS 1005
CLUSTERCODE_HLR_SS7SLMT1 1006
CLUSTERCODE_HLR_SS7SLMT2 1006
CLUSTERCODE_HLR_SS7SLTRAFF 1006
CNRECONX_SS7HSLMT3 1007
CNSUMERS_SS7HSLMT3 1007
CONCNT1 1007
CONCNT2 1008
CONCNT3 1008
CONDUR1 1008
CONDUR2 1009
CONDUR3 1009

Updated: 2009-07-22

CONSTOP1 1009
CONSTOP2 1009
CONSTOP3 1010
DCLRFAIL 1010
DCLRFAIL_SS7HSLMT1 1010
DCONG_HLR 1011
DDCFLABN 1011
DDCFLHWP 1011
DDCFLHWP_SS7HSLMT2 1012
DDCFLXDA 1012
DDCFLXDA_SS7HSLMT2 1012
DDCFLXDC 1013
DDCFLXDC_SS7HSLMT2 1013
DDCFLXER 1013
DDCFLXER_SS7HSLMT2 1014
DISMSU1 1014
DISMSU2 1014
DISMSU3 1015
DRBSYDCL 1015
DRBSYDCL_SS7HSLMT1 1015
DRBSYRCD 1015
DRDCLFLR 1016
DRDCLFLR_SS7HSLMT2 1016
DRFEPRO 1016
DRFEPRO_SS7HSLMT1 1017
DRLCLPRO 1017
DRLCLPRO_SS7HSLMT2 1017
DRLKFAIL 1018
DRLKINHB 1018
DRLKINHB_SS7HSLMT2 1018
DRNOCRED_SS7HSLMT3 1019
DUNAV_HLR 1019
ECCNGLV1 1019
ECCNGLV1_SS7HSLMT1 1019
ECCNGLV2 1020
ECCNGLV2_SS7HSLMT1 1020
ECCNGLV3 1020
ECCNGLV3_SS7HSLMT1 1021
ERRSEC 1021
ERRSEC_SS7HSLTRAF 1021
FARMGINH 1022
FARMGINH_SS7HSLMT2 1022
HDRDSCDS_SS7HSLMT3 1022
HECDSCDS_SS7HSLMT3 1023
HLR_RELEASE 1023
ICUICELS_SS7HSLTRAF 1023
ILS_HLR_SS7SLMT1 1023
ILS_HLR_SS7SLTRAFF 1024
INCCELLS_SS7HSLTRAF 1024
INITFLRS_SS7HSLMT3 1024
INVLPDUS_SS7HSLMT3 1024

© Copyright IBM Corp. 2008, 2009. All Rights Reserved.

LACKCRED_SS7HSLMT3 1025
LBUSDUR 1025
LINHNO 1025
LKMTCST 1026
LKMTCST_SS7HSLMT1 1026
LOCINHDUR 1026
LOFMSU1 1027
LOFMSU2 1027
LOFMSU3 1027
LS10SCAN 1028
LS10SCAN_SS7HSLMT2 1028
LSID_HLR 1028
MCHGOVRS 1029
MCHGOVRS_SS7HSLMT2 1029
MEMBERCODE_HLR_SS7SLMT1 1029
MEMBERCODE_HLR_SS7SLMT2 1029
MEMBERCODE_HLR_SS7SLTRAFF 1030
MGMTINHB 1030
MGMTINHB_SS7HSLMT1 1030
MOCTRGTT_SS7HSLTRAF 1031
MSGDISC0_SS7HSLMT1 1031
MSGDISC1_SS7HSLMT1 1031
MSGDISC2_SS7HSLMT1 1032
MSGDISC3_SS7HSLMT1 1032
MSGDISCH_SS7HSLMT1 1032
MSGSRCVD_SS7HSLTRAF 1033
MSGSRGTT_SS7HSLTRAF 1033
MSGSTRAN_SS7HSLTRAF 1033
MSUDISC0 1033
MSUDISC1 1034
MSUDISC2 1034
MSUDISC3 1034
MSURCERR 1035
MSURECD 1035
MSURETRN 1035
MSUSRGTT 1036
MSUTRAN 1036
MTCEUSG 1036
MTCEUSG_SS7HSLMT1 1037
N10SCAN 1037
N10SCAN_SS7HSLMT1 1037
NDCFLABN 1037
NDCFLHWP 1038
NDCFLHWP_SS7HSLMT2 1038
NDCFLXDA 1038
NDCFLXDA_SS7HSLMT2 1039
NDCFLXDC 1039
NDCFLXDC_SS7HSLMT2 1039
NDCFLXER 1040
NDCFLXER_SS7HSLMT2 1040
NDISC_HLR 1040

NEARMGIH 1041
NEARMGIH_SS7HSLMT2 1041
NEGACKS 1041
NLOSS_HLR 1041
NMDCLFLR 1042
NMDCLFLR_SS7HSLMT2 1042
NMSURE 1042
NMSURE_ASC_CCITT7_HLR 1043
NMSUTR 1043
NMSUTR_ASC_CCITT7_HLR 1043
NNAREC 1044
NOCTRE_HLR 1044
NOCTRTR_HLR 1044
NOCTTR_HLR 1045
NORTRO 1045
NSIFSRE 1045
NSIFTR 1045
NSLALPRFL 1046
NSLCO_HLR 1046
NSLFA_HLR 1046
NSUERR 1047
OCDANMLS_SS7HSLMT3 1047
OCTRCGTT 1047
OGUICELS_SS7HSLTRAF 1048
OUTCELLS_SS7HSLTRAF 1048
PDULSTER_SS7HSLMT3 1048
PDUOCTRC_SS7HSLTRAF 1049
PDUOCTTR_SS7HSLTRAF 1049
PDUSRCVD_SS7HSLTRAF 1049
PDUSTRAN_SS7HSLTRAF 1049
PDUSUMER_SS7HSLMT3 1050
PERLEN 1050
PERLEN_C7TM 1050
PROSTAT 1050
PROTRAN 1051
RECVDOCT 1051
RECVDOCT_SS7HSLTRAF 1051
REMINHDUR 1052
RETRNOCT 1052
rg_reap 1052
RINHNO 1052
SAALINSV_SS7HSLMT3 1053
SAMPCNT 1053
SAMPCNT_SS7HSLMT1 1053
SCANSEC_ASC_CCITT7_HLR 1053
SDOCTRCV_SS7HSLTRAF 1054
SDOCTRTR_SS7HSLTRAF 1054
SDOCTTRN_SS7HSLTRAF 1054
SDPDURCV_SS7HSLTRAF 1055
SDPDURRR_SS7HSLTRAF 1055
SDPDURTR_SS7HSLTRAF 1055

© Copyright IBM Corp. 2008, 2009. All Rights Reserved.

SDPDUTRN_SS7HSLTRAF . . . 1056
SL10SCAN . . . 1056
SL10SCAN_SS7HSLMT2 . . . 1056
SLPARMGP . . . 1057
SLPARMGP_SS7HSLMT2 . . . 1057
SYS7IND . . . 1057
SYS7IND_C7SL1 . . . 1058
TDCNGLV1 . . . 1058
TDCNGLV1_SS7HSLMT1 . . . 1058
TDCNGLV2 . . . 1058
TDCNGLV2_SS7HSLMT1 . . . 1059
TDCNGLV3 . . . 1059
TDCNGLV3_SS7HSLMT1 . . . 1059
THRACHOV . . . 1060
THRMSUER . . . 1060
THRNEGAK . . . 1060
TLNKACTV . . . 1061
TLNKACTV_SS7HSLMT1 . . . 1061
TOTOCMSG_SS7HSLMT1 . . . 1061
TOTOCMSU . . . 1062
TOTOCOCT . . . 1062
TOTOCOCT_SS7HSLMT1 . . . 1062
TOTPRIO0 . . . 1062
TOTPRIO0_SS7HSLMT1 . . . 1063
TOTPRIO1 . . . 1063
TOTPRIO1_SS7HSLMT1 . . . 1063
TOTPRIO2 . . . 1064
TOTPRIO2_SS7HSLMT1 . . . 1064
TOTPRIO3 . . . 1064
TOTPRIO3_SS7HSLMT1 . . . 1065
TRANOCT . . . 1065
TRANOCT_SS7HSLTRAF . . . 1065
UNAVAILDUR . . . 1066
UNAVRBLDUR . . . 1066
UNAVSLFDUR . . . 1066
UNEXPDUS_SS7HSLMT3 . . . 1066
HLR_SS7LinkSet Primitive Calculations . . . 1067
GRAPHmultiLineSeparator . . . 1067
INTERVALS . . . 1067
LocalName . . . 1067
NUMDAYS . . . 1067
NUMHOURS . . . 1067
VENDORTECH . . . 1068
HLR_SS7LinkSet Peg Counts . . . 1068
ASPADUR_HLR . . . 1068
ASPINA_HLR . . . 1068
AVLINKS . . . 1068
AVLINKS_SS7HSLS . . . 1069
CLUSTERCODE_HLR_SS7LS . . . 1069
HLR_RELEASE . . . 1069
ICUICELS_SS7HSLS . . . 1069

Updated: 2009-07-22

INCCELLS_SS7HSLS 1070
LINKS 1070
LINKS_SS7HSLS 1070
LSMTCST 1071
LSMTCST_SS7HSLS 1071
MEMBERCODE_HLR_SS7LS 1071
MSGSRCVD_SS7HSLS 1072
MSGSTRAN_SS7HSLS 1072
MSURECD 1072
MSURETRN 1073
MSUTRAN 1073
N10SCAN 1073
N10SCAN_SS7HSLS 1074
OGUICELS_SS7HSLS 1074
OOSLINKS 1074
OOSLINKS_SS7HSLS 1074
OUTCELLS_SS7HSLS 1075
PDUOCTRC_SS7HSLS 1075
PDUOCTTR_SS7HSLS 1075
PDUSRCVD_SS7HSLS 1076
PDUSTRAN_SS7HSLS 1076
PERLEN 1076
RECVDOCT 1076
RECVDOCT_SS7HSLS 1077
RETRNOCT 1077
rg_reap 1077
SDOCTRCV_SS7HSLS 1077
SDOCTRTR_SS7HSLS 1078
SDOCTTRN_SS7HSLS 1078
SDPDURCV_SS7HSLS 1078
SDPDURTR_SS7HSLS 1079
SDPDUTRN_SS7HSLS 1079
STUNADURAT_HLR 1079
SYS7IND_HLR_C7ADJSLP 1080
SYS7IND_HLR_C7SLSET 1080
TDLSINAC 1080
TDLSINAC_SS7HSLS 1080
TRANOCT 1081
TRANOCT_SS7HSLS 1081
UAVLINKS 1081
UAVLINKS_SS7HSLS 1082
HLR_SS7RouteSet Primitive Calculations 1082
GRAPHmultiLineSeparator 1082
INTERVALS 1082
LocalName 1082
NUMDAYS 1083
NUMHOURS 1083
VENDORTECH 1083
HLR_SS7RouteSet Peg Counts 1083
HLR_RELEASE 1083
PERLEN 1083

© Copyright IBM Corp. 2008, 2009. All Rights Reserved.

rg_reap . . . 1083
STINACNT_HLR . . . 1083
STINADURAT_HLR . . . 1084
SYS7IND_HLR_C7RTSET . . . 1084
HLR_VLR Primitive Calculations . . . 1084
GRAPHmultiLineSeparator . . . 1084
INTERVALS . . . 1084
NUMDAYS . . . 1085
NUMHOURS . . . 1085
VENDORTECH . . . 1085
HLR_VLR Peg Counts . . . 1085
HLR_RELEASE . . . 1085
NACTIVSS . . . 1085
NACTTRAC . . . 1086
NBEGACT . . . 1086
NCANCEL . . . 1086
NDEACTRA . . . 1086
NDEACTSS . . . 1087
NDELETE . . . 1087
NERASESS . . . 1087
NINSERT . . . 1088
NINTRRSS . . . 1088
NPROROA . . . 1088
NPRSINFO . . . 1089
NPURGEMS . . . 1089
NPUSSDAR . . . 1089
NPUSSRQR . . . 1090
NREGPASS . . . 1090
NREGTRSS . . . 1090
NUPDLOC . . . 1090
NUSSDNTS . . . 1091
NUSSDRQS . . . 1091
PERLEN . . . 1091
rg_reap . . . 1091
INAP Primitive Calculations . . . 1092
GRAPHmultiLineSeparator . . . 1092
NUMDAYS . . . 1092
NUMHOURS . . . 1092
INAP Peg Counts . . . 1092
HLR_RELEASE . . . 1092
NINAPFLT . . . 1092
NINAPSUCC . . . 1092
NINAPTOT . . . 1092
PERLEN . . . 1092
Map Primitive Calculations . . . 1093
GRAPHmultiLineSeparator . . . 1093
INTERVALS . . . 1093
LocalName . . . 1093
NUMDAYS . . . 1093
NUMHOURS . . . 1093

VENDORTECH 1093
Map Peg Counts 1094
HLR_RELEASE 1094
NMAPFLT 1094
NMAPSUCC 1094
NMAPTOT 1094
PERLEN 1095
rg_reap 1095
PLMN Primitive Calculations 1095
GRAPHmultiLineSeparator 1095
INTERVALS 1095
LocalName 1095
NUMDAYS 1095
NUMHOURS 1095
VENDORTECH 1096
PLMN Peg Counts 1096
GPPERPLMNCNT 1096
HLR_RELEASE 1096
PERLEN 1096
PERPLMNCNT 1096
rg_reap 1097
SERVICEFEATURE_HLR Primitive Calculations 1097
GRAPHmultiLineSeparator 1097
INTERVALS 1097
LocalName 1097
NUMDAYS 1097
NUMHOURS 1097
VENDORTECH 1098
SERVICEFEATURE_HLR Peg Counts 1098
NSERVFEAT 1098
NSERVFEATINV 1098
PERLEN 1098
rg_reap 1098
SERVICEFEATURE_HLR_RELEASE 1099
SGSN_Map Primitive Calculations 1099
GRAPHmultiLineSeparator 1099
INTERVALS 1099
NUMDAYS 1099
NUMHOURS 1099
VENDORTECH 1099
SGSN_Map Peg Counts 1099
HLR_RELEASE 1100
NCANGLOC 1100
NDSDGPRS 1100
NISDGPRS 1100
NPURGEGP 1101
NUPGPLOC 1101
PERLEN 1101
rg_reap 1101
SubServices Primitive Calculations 1101

© Copyright IBM Corp. 2008, 2009. All Rights Reserved.

GRAPHmultiLineSeparator 1101
INTERVALS 1102
NUMDAYS 1102
NUMHOURS 1102
VENDORTECH 1102
SubServices Peg Counts 1102
HLR_RELEASE 1102
NACCESS 1102
NACT 1103
NACTIVE 1103
NDEACT 1103
NSUCCACT 1104
NSUCCUSE 1104
NUSE 1104
PERLEN 1104
rg_reap 1105
SUPPSERVICE_HLR Primitive Calculations 1105
GRAPHmultiLineSeparator 1105
INTERVALS 1105
LocalName 1105
NUMDAYS 1105
NUMHOURS 1105
VENDORTECH 1105
SUPPSERVICE_HLR Peg Counts 1106
NALLBSG 1106
NASYNCR 1106
NAUXSPEE 1106
NFACSIM 1107
NSMS 1107
NSPEECH 1107
NSUCACTEX 1108
NSUCCACT 1108
NSUCCERA 1108
NSUCCINT 1108
NSUCCINV 1109
NSUCCREG 1109
NSUCDEACT 1109
NSUCDEACTEX 1110
NSUCERAEX 1110
NSUCINTEX 1110
NSUCREGEX 1111
NSYNCRO 1111
PERLEN 1111
rg_reap 1111
SUPPSERVICE_HLR_RELEASE 1111
System Primitive Calculations 1112
GRAPHmultiLineSeparator 1112
NUMDAYS 1112
NUMHOURS 1112
PercentActiveSubscribers 1112

PercentRegisteredSubscribers 1112
pTotalGGSNPacketSuccessRate 1112
pTotalSessionManSuccessRateGGSN 1113
RegisteredInroamers 1113
RegisteredOutroamer 1113
SubscribersHLR 1113
SubscribersVLR 1113
TotalCellTCHTraffic 1113
TotalSwitchedTraffic 1113
System Peg Counts 1114
rg_reap 1114

11 MSC Traffic Entities 1115

12 MSC Traffic Fields 1117
AppContext_MSC Primitive Calculations 1117
GRAPHmultiLineSeparator 1117
NUMDAYS 1117
NUMHOURS 1117
AppContext_MSC Peg Counts 1117
NFB3TO1TOT 1117
NFB3TO2TOT 1118
NFBACTOT 1118
BSC Primitive Calculations 1118
Alloc_Fail 1118
CP_LOAD% 1118
GRAPHmultiLineSeparator 1118
INTERVALS 1118
INTERVALS_MSC 1118
NUMDAYS 1119
NUMHOURS 1119
PROC_LOAD% 1119
TCH_Traffic 1119
TCH_Traffic_BH 1119
VENDORTECH 1119
BSC Peg Counts 1119
ABLOL 1120
ABORT 1120
ACCLOAD 1120
ALLPDCHPCUATT 1120
ALLPDCHPCUFAIL 1121
AQMDELIVDATA 1121
AQMRECDATA 1121
BLOL 1122
BLOL_RP 1122
BLOLCLM_BSC 1122
BLOLSPM_BSC 1123
BLOLSPMA_BSC 1123
BLOLSPMB_BSC 1123
BLOLTSM_BSC 1124
BLOLTSMA_BSC 1124

© Copyright IBM Corp. 2008, 2009. All Rights Reserved.

BLOLTSMB_BSC 1124
BSCCUMMS 1125
BSCMAXMS 1125
BSS_RELEASE 1125
BUFFRS 1125
C7ROUTECNT 1126
CONNSECT 1126
COREQSEG 1126
CREFREC 1126
CREFSENT 1127
CRREC 1127
CRSENT 1127
CSEGRESF 1128
DELRELDLTBF 1128
DELRELTONRM 1128
DISCDL 1129
DISCUL 1129
DMSU_BSC 1129
DSIF_BSC 1130
ECTMCTMSD 1130
ECTMMSNOT 1130
ECTMMSSUP 1131
ECTMNCTMSD 1131
ERRREC 1131
ERRSENT 1132
ESUDLTBF 1132
ESUTONRM 1132
EXULNRM 1133
EXULTIP 1133
FAILMOVECELL 1133
FRSPV1 1134
FRSPV2 1134
FRSPV3 1134
FRSPV5 1134
FRV1UNATT 1135
FRV2UNATT 1135
FRV3UNATT 1135
FRV5UNATT 1136
FTDTCAP 1136
G2GPH0040LOAD 1136
G2GPH4160LOAD 1137
G2GPH6180LOAD 1137
G2GPH8190LOAD 1137
G2GPH9100LOAD 1138
G2PGW0040LOAD 1138
G2PGW4160LOAD 1138
G2PGW6180LOAD 1139
G2PGW8190LOAD 1139
G2PGW9100LOAD 1139
G2TRH0040LOAD 1139
G2TRH4160LOAD 1140

Updated: 2009-07-22

G2TRH6180LOAD 1140
G2TRH8190LOAD 1140
G2TRH9100LOAD 1141
GBTIMECONG 1141
GBTRAFPEAK 1141
GBTRAFVOL 1142
GSL0040 1142
GSL4160 1142
GSL6180 1143
GSL8190 1143
GSL9100 1143
GSLMAX 1144
GSLSCAN 1144
GSLSSCAN 1144
GSLUTIL 1145
GSM1800CUMMS 1145
GSM1800MAXMS 1145
GSM400CUMMS 1145
GSM400MAXMS 1146
GSM800CUMMS 1146
GSM800MAXMS 1146
GSM900CUMMS 1147
GSM900MAXMS 1147
HLSCGREL 1147
HRSPV1 1148
HRSPV3 1148
HRV1UNATT 1148
HRV2UNATT 1149
HRV3UNATT 1149
IMSU_BSC 1149
ISIF_BSC 1149
LCCELLMOV 1150
LCCELLMOVREJ 1150
LCHIRPPLOAD 1150
LCMSSUPRFC 1151
LCPARREJ 1151
LCRELBUSYHI3 1151
LCRELIDLEHI3 1152
LINKS 1152
LNKSETS 1152
MSGHAND 1153
MSGPOL 1153
MSGPOLREJ 1153
MSGRCL0 1154
MSGRCL1 1154
MSGRQGT 1154
MSGSCL0 1155
MSGSCL1 1155
MSINVDPC_BSC 1155
MSINVSIO_BSC 1155
MTPREST 1156

© Copyright IBM Corp. 2008, 2009. All Rights Reserved.

NACCBLOT_BSC 1156
NACCPCO 1156
NBLOCLMACC_BSC 1157
NBLOL 1157
NBLOSPMAACC_BSC 1157
NBLOSPMACC_BSC 1158
NBLOSPMBACC_BSC 1158
NBLOTSMAACC_BSC 1158
NBLOTSMACC_BSC 1159
NBLOTSMBACC_BSC 1159
NBSCOINRCVSUCC 1159
NBSCOINSNTTOT 1159
NBSDFRFRSUCC 1160
NBSDFRHRSUCC 1160
NBSDFRSUCC 1160
NBSDFRTOT 1161
NBSDHRFRSUCC 1161
NBSDHRHRSUCC 1161
NBSDHRSUCC 1162
NBSDHRTOT 1162
NBSDTOT 1162
NBSFRFRSUCC 1163
NBSFRTOT 1163
NBSFRV1ANPTOT 1163
NBSFRV1ATOT 1164
NBSFRV1PTOT 1164
NBSFRV2ANPTOT 1164
NBSFRV2ATOT 1165
NBSFRV2PTOT 1165
NBSFRV3ANPTOT 1165
NBSFRV3ATOT 1166
NBSFRV3PTOT 1166
NBSHRHRSUCC 1166
NBSHRTOT 1167
NBSHRV1ANPTOT 1167
NBSHRV1ATOT 1167
NBSHRV1PTOT 1168
NBSHRV2ANPTOT 1168
NBSHRV2ATOT 1168
NBSHRV2PTOT 1169
NBSHRV3ANPTOT 1169
NBSHRV3ATOT 1169
NBSHRV3PTOT 1170
NBSLOCINCMDTOT 1170
NBSLOCINREPSUCC 1170
NBSMSLSUCC 1171
NBSMSLTOT 1171
NBSOVLSTOT 1171
NBSPCHACMTOT 1172
NBSPCHAFMTOT 1172
NBSPCHAFSWTOT 1172

NBSPEHNDTOT 1173
NBSRLOCRESSUCC 1173
NBSSLOCREQTOT 1173
NBSTIHBSUCC 1174
NBSTIUGHBSUCC 1174
NBSTOGUHBSUCC 1174
NBSTOHBSUCC 1175
NBSTRGUHRTOT 1175
NBSTRHPTOT 1175
NBSTRHRTOT 1176
NBSTRRMTOT 1176
NBSTSHRTOT 1176
NBSTSMITTOT 1176
NBSTSUGHRTOT 1177
NC2CONF 1177
NC2ORDER 1177
NC2PCO 1178
NCAPREJCNT 1178
NCAPREQCNT 1178
NCLM_BSC 1179
NCPABLOT_BSC 1179
NCPMBLOT_BSC 1179
NEM 1180
NEMG 1180
NEMRP 1180
NFORLAPT_BSC 1181
NFORLAPZ_BSC 1181
NFORLMAN_BSC 1181
NFTDEMC 1182
NFTDIEX 1182
NFTDMHI 1182
NFTDMLO 1183
NFTDMT0 1183
NFTDMT1 1183
NFTDMT10 1184
NFTDMT12 1184
NFTDMT13 1184
NFTDMT14 1185
NFTDMT15 1185
NFTDMT2 1185
NFTDMT3 1186
NFTDMT4 1186
NFTDMT5 1186
NFTDMT6 1187
NFTDMT7 1187
NFTDMT8 1187
NFTDMT9 1188
NFTDNPRIO_BSC 1188
NFTDORG 1188
NFTDPRIO_BSC 1189
NFTDTCAP 1189

© Copyright IBM Corp. 2008, 2009. All Rights Reserved.

NLRGA_BSC 1189
NLRGM_BSC 1189
NMAUABLOT_BSC 1190
NMAUF_BSC 1190
NMAUMBLOT_BSC 1190
NNOREC_BSC 1191
NOFFIEX 1191
NOFFMHI 1191
NOFFMLO 1192
NOFFMT0 1192
NOFFMT1 1192
NOFFMT10 1193
NOFFMT12 1193
NOFFMT13 1193
NOFFMT14 1194
NOFFMT15 1194
NOFFMT2 1194
NOFFMT3 1195
NOFFMT4 1195
NOFFMT5 1195
NOFFMT6 1196
NOFFMT7 1196
NOFFMT8 1196
NOFFMT9 1197
NOFFNPRIO_BSC 1197
NOFFORG 1197
NOFFPRIO_BSC 1198
NOFFTCAP 1198
NPBITF_BSC 1198
NPCPF_BSC 1199
NPERMF 1199
NPERMF_EMG 1199
NREJEMC 1200
NREJIEX 1200
NREJNPRIO 1200
NREJORG 1201
NREJPCH 1201
NREJPRIO 1201
NRELA_BSC 1201
NRELM_BSC 1202
NRP 1202
NSCAN 1202
NSCAN_GRPSWITCH_BSC 1203
NSMLA_BSC 1203
NSMLM_BSC 1203
NSPM_BSC 1204
NT10SRST 1204
NT11TFRS 1204
NT12UNAK 1205
NT13FUNH 1205
NT14INAK 1205

Updated: 2009-07-22

NT15RSCT 1205
NT16RSCS 1206
NT19FLKR 1206
NT1TDCHO 1206
NT20RLIH 1207
NT21RRIH 1207
NT2CHOAK 1207
NT3TDCHB 1208
NT4CHBK1 1208
NT5CHBK2 1208
NT6TDCRR 1209
NT8TRPRH 1209
NTBITF_BSC 1209
NTCPF_BSC 1209
NTEMPF 1210
NTSM_BSC 1210
OCTRETRN_BSC 1210
OMMSU_BSC 1211
OMSIF_BSC 1211
OUMSU_BSC 1211
OUSIF_BSC 1212
P95FPHGT_BSC 1212
P95FPHNT_BSC 1212
PAGCSBSC 1213
PAGCSCONG 1213
PAGPSBSC 1213
PAIRABLOL 1214
PAIRABLOL1 1214
PAIRMBLOL 1214
PAIRMBLOL1 1214
PBPGW0040LOAD 1215
PBPGW4160LOAD 1215
PBPGW6180LOAD 1215
PBPGW8190LOAD 1216
PBPGW9100LOAD 1216
PENDCONTSTRTBF 1216
PENDSTRTBF 1217
PERFLOCABORT 1217
PERFLOCREQ 1217
PERFLOCRESP 1218
PERLEN 1218
PERLEN_MSC 1218
PGWHLRPP 1218
RCBFSZMS 1218
RESET 1219
RFNETCONG 1219
RFNETFAIL 1219
RFSPADDR 1220
RFSSNFAIL 1220
RFSUADDR 1220
RFUNEQUIP 1221

© Copyright IBM Corp. 2008, 2009. All Rights Reserved.

RFUNQUAL 1221
RPP0040 1221
RPP4160 1221
RPP6180 1222
RPP8190 1222
RPP9100 1222
SAMPPHGT_BSC 1223
SAMPPHNT_BSC 1223
SHLSCGREL 1223
SIZEDS_BSC 1224
SIZEPS_BSC 1224
SIZERS_BSC 1224
SPEECHCALL 1225
STARTCONTSTRTBF 1225
STARTSTRTBF 1225
SVHLSCGREL 1226
SYERROR 1226
TIMEPHGT_BSC 1226
TIMEPHNT_BSC 1226
TMASSALL 1227
TMCASSALL 1227
TMCHRECACC 1227
TMCHREQACC 1228
TMCHSCAN 1228
TMCNCBATT 1228
TMCNCBSUCC 1229
TMCNCMATT 1229
TMCNCMSUCC 1229
TMHOATT 1230
TMHOSUCC 1230
TMMSU_BSC 1230
TMSIF_BSC 1230
TOTCONGPAG 1231
TOTPAG 1231
TOTSCBUF1 1231
TOTSCBUF2 1232
TOTSCBUF3 1232
TOTSCBUF4 1232
TRASSYNCF 1233
TREQRES 1233
TSMODECS 1233
TSMODEIDLE 1234
TSMODEPS 1234
TUMSU_BSC 1234
TUSIF_BSC 1234
TXBFSZOC 1235
UDTREC 1235
UDTSENT 1235
UDTSREC 1236
UDTSSENT 1236
USGSCNVC 1236

Updated: 2009-07-22

VHLSCGREL 1237
XUDTREC 1237
XUDTSENT 1237
XUDTSREC 1238
XUDTSSENT 1238
Z22 1238
Z23 1238
Z24 1239
Z25 1239
Z26 1239
Z27 1240
Z28 1240
Z29 1240
Z30 1241
Z31 1241
Z32 1241
BSC_NI Primitive Calculations 1242
GRAPHmultiLineSeparator 1242
NUMDAYS 1242
NUMHOURS 1242
BSC_SS7Dest Primitive Calculations 1242
LocalName 1242
BSC_SS7HSLPrmGrp Primitive Calculations 1242
GRAPHmultiLineSeparator 1242
LocalName 1243
NUMDAYS 1243
NUMHOURS 1243
VENDORTECH 1243
BSC_SS7HSLPrmGrp Peg Counts 1243
AERMM 1243
AERMN 1244
AERMTIE 1244
AERMTIN 1244
ALPHA 1244
CNGABTH1 1245
CNGABTH2 1245
CNGABTH3 1245
CNGDITH1 1246
CNGDITH2 1246
CNGDITH3 1246
CNGONTH1 1247
CNGONTH2 1247
CNGONTH3 1247
ERRCORR 1248
HLR_RELEASE 1248
LT1ALNRD 1248
LT1UNACK 1248
LT2NOALN 1249
LT3ALIND 1249
LT4EMGPV 1249

© Copyright IBM Corp. 2008, 2009. All Rights Reserved.

LT4NMLPV 1250
LT5DSIB 1250
LT6RMCNG 1250
LT7XDLAK 1251
LTBLCKSZ 1251
LTFORPRV 1251
LTKPALIV 1252
LTMAXPDU 1252
LTMXIDLE 1252
LTNOCRED 1253
LTPRVPDU 1253
LTPULLRT 1253
LTSCCFAL 1253
LTSCCOPR 1254
LTSETALG 1254
LTSTATLS 1254
LTTAUERR 1255
MONEREVT 1255
MONINTER 1255
NMXSDPDU 1256
NMXSTPDU 1256
NMXUNACK 1256
NT17REAL 1257
PCRN2 1257
PDUSENTP 1257
PERLEN 1258
SCCOPPDU 1258
SUERMD 1258
SUERMT 1258
TAS 1259
THRSRUNQ 1259
TTS 1259
BSC_SS7Link Primitive Calculations 1259
C7_SLTL_RX 1260
C7_SLTL_TX 1260
GRAPHmultiLineSeparator 1260
INTERVALS 1260
NumberMSUsReceived 1260
NumberMSUsTransmitted 1260
NumberSIFAndSIOOctetsReceived 1260
NumberSIFAndSIOOctetsTransmitted 1261
NUMDAYS 1261
NUMHOURS 1261
PercentageLinkAvailability 1261
PercentageLocalBusy 1261
VENDORTECH 1261
BSC_SS7Link Peg Counts 1261
ACHGOVRS_BSC_C7Link 1262
ACHGOVRS_BSC_HSC7Link 1262
ALGNFLRS_BSC_HSC7Link 1262
ASLDUR 1262

BSS_RELEASE 1263
CDISCONX_BSC_HSC7Link 1263
CGSTEVL_BSC_HSC7Link 1263
CGSTLEVL 1263
CGSTLEVL_BSC_C7Link 1264
CGSTSTAT_BSC_C7Link 1264
CGSTSTAT_BSC_HSC7Link 1264
CHOVERS 1265
CLUSTERCODE_BSC_SS7SLMT1 1265
CLUSTERCODE_BSC_SS7SLMT2 1265
CLUSTERCODE_BSC_SS7SLTRAFF 1266
CNRECONX_BSC_HSC7Link 1266
CNSUMERS_BSC_HSC7Link 1266
CONCNT1 1267
CONCNT2 1267
CONCNT3 1267
CONDUR1 1267
CONDUR2 1268
CONDUR3 1268
CONSTOP1 1268
CONSTOP2 1269
CONSTOP3 1269
DATALOSTFLAG_SPDL 1269
DCLRFAIL_BSC_C7Link 1270
DCLRFAIL_BSC_HSC7Link 1270
DDCFLABN_BSC_C7Link 1270
DDCFLHWP_BSC_C7Link 1271
DDCFLHWP_BSC_HSC7Link 1271
DDCFLXDA_BSC_C7Link 1271
DDCFLXDA_BSC_HSC7Link 1272
DDCFLXDC_BSC_C7Link 1272
DDCFLXDC_BSC_HSC7Link 1272
DDCFLXER_BSC_C7Link 1273
DDCFLXER_BSC_HSC7Link 1273
DISMSU1 1273
DISMSU2 1273
DISMSU3 1274
DRBSYDCL_BSC_C7Link 1274
DRBSYDCL_BSC_HSC7Link 1274
DRBSYRCD_BSC_C7Link 1275
DRDCLFLR_BSC_C7Link 1275
DRDCLFLR_BSC_HSC7Link 1275
DRFEPRO_BSC_C7Link 1276
DRFEPRO_BSC_HSC7Link 1276
DRLCLPRO_BSC_C7Link 1276
DRLCLPRO_BSC_HSC7Link 1277
DRLKFAIL_BSC_C7Link 1277
DRLKINHB_BSC_C7Link 1277
DRLKINHB_BSC_HSC7Link 1277
DRNOCRED_BSC_HSC7Link 1278
ECCNGLV1_BSC_C7Link 1278

© Copyright IBM Corp. 2008, 2009. All Rights Reserved.

ECCNGLV1_BSC_HSC7Link 1278
ECCNGLV2_BSC_C7Link 1279
ECCNGLV2_BSC_HSC7Link 1279
ECCNGLV3_BSC_C7Link 1279
ECCNGLV3_BSC_HSC7Link 1280
ERRSEC_BSC_C7Link 1280
ERRSEC_BSC_HSC7Link 1280
FARMGINH_BSC_C7Link 1281
FARMGINH_BSC_HSC7Link 1281
HDRDSCDS_BSC_HSC7Link 1281
HECDSCDS_BSC_HSC7Link 1281
HSLDISMSU1 1282
HSLDISMSU2 1282
HSLDISMSU3 1282
HSLHDRDSCDS 1283
HSLHECDSCDS 1283
HSLINCCELLS 1283
HSLLOFMSU1 1284
HSLLOFMSU2 1284
HSLLOFMSU3 1284
HSLNMSURE 1285
HSLNMSUTR 1285
HSLNNAREC 1285
HSLNSUERR 1286
HSLOCDANMLS 1286
HSLOUTCELLS 1286
HSLTTLRBC 1286
ICUICELS_BSC_HSC7Link 1287
ILS_BSC_SS7SLMT1 1287
ILS_BSC_SS7SLTRAFF 1287
INCCELLS_BSC_HSC7Link 1288
INITFLRS_BSC_HSC7Link 1288
INVLPDUS_BSC_HSC7Link 1288
LACKCRED_BSC_HSC7Link 1289
LBUSDUR 1289
LINHNO 1289
LKMTCST_BSC_C7Link 1290
LKMTCST_BSC_HSC7Link 1290
LOCINHDUR 1290
LOFMSU1 1291
LOFMSU2 1291
LOFMSU3 1291
LS10SCAN_BSC_C7Link 1291
LS10SCAN_BSC_HSC7Link 1292
MCHGOVRS_BSC_C7Link 1292
MCHGOVRS_BSC_HSC7Link 1292
MEMBERCODE_BSC_SS7SLMT1 1293
MEMBERCODE_BSC_SS7SLMT2 1293
MEMBERCODE_BSC_SS7SLTRAFF 1293
MGMTINHB_BSC_C7Link 1294
MGMTINHB_BSC_HSC7Link 1294

Updated: 2009-07-22

MOCTRGTT_BSC_HSC7Link 1294
MSGDISC0_BSC_HSC7Link 1295
MSGDISC1_BSC_HSC7Link 1295
MSGDISC2_BSC_HSC7Link 1295
MSGDISC3_BSC_HSC7Link 1295
MSGDISCH_BSC_HSC7Link 1296
MSGSRCVD_BSC_HSC7Link 1296
MSGSRGTT_BSC_HSC7Link 1296
MSGSTRAN_BSC_HSC7Link 1297
MSUDISC0_BSC_C7Link 1297
MSUDISC1_BSC_C7Link 1297
MSUDISC2_BSC_C7Link 1298
MSUDISC3_BSC_C7Link 1298
MSURCERR_BSC_C7Link 1298
MSURECD_BSC_C7Link 1299
MSURETRN_BSC_C7Link 1299
MSUSRGTT_BSC_C7Link 1299
MSUTRAN_BSC_C7Link 1299
MTCEUSG_BSC_C7Link 1300
MTCEUSG_BSC_HSC7Link 1300
N10SCAN_BSC_C7Link 1300
N10SCAN_BSC_HSC7Link 1301
NDCFLABN_BSC_C7Link 1301
NDCFLHWP_BSC_C7Link 1301
NDCFLHWP_BSC_HSC7Link 1302
NDCFLXDA_BSC_C7Link 1302
NDCFLXDA_BSC_HSC7Link 1302
NDCFLXDC_BSC_C7Link 1303
NDCFLXDC_BSC_HSC7Link 1303
NDCFLXER_BSC_C7Link 1303
NDCFLXER_BSC_HSC7Link 1303
NEARMGIH_BSC_C7Link 1304
NEARMGIH_BSC_HSC7Link 1304
NEGACKS_BSC_C7Link 1304
NMDCLFLR_BSC_C7Link 1305
NMDCLFLR_BSC_HSC7Link 1305
NMSURE 1305
NMSUTR 1306
NNAREC 1306
NORTRO 1306
NSIFSRE 1307
NSIFTR 1307
NSLALPRFL 1307
NSUERR 1307
OCDANMLS_BSC_HSC7Link 1308
OCTRCGTT_BSC_C7Link 1308
OGUICELS_BSC_HSC7Link 1308
OUTCELLS_BSC_HSC7Link 1309
PDULSTER_BSC_HSC7Link 1309
PDUOCTRC_BSC_HSC7Link 1309
PDUOCTTR_BSC_HSC7Link 1310

© Copyright IBM Corp. 2008, 2009. All Rights Reserved.

PDUSRCVD_BSC_HSC7Link 1310
PDUSTRAN_BSC_HSC7Link 1310
PDUSUMER_BSC_HSC7Link 1311
PERLEN 1311
PROSTAT_BSC_C7Link 1311
PROTRAN_BSC_C7Link 1311
RECVDOCT_BSC_C7Link 1312
RECVDOCT_BSC_HSC7Link 1312
REMINHDUR 1312
RETRNOCT_BSC_C7Link 1313
RETRP 1313
RINHNO 1313
SAALINSV_BSC_HSC7Link 1313
SAMPCNT_BSC_C7Link 1314
SAMPCNT_BSC_HSC7Link 1314
SDOCTRCV_BSC_HSC7Link 1314
SDOCTRTR_BSC_HSC7Link 1315
SDOCTTRN_BSC_HSC7Link 1315
SDPDURCV_BSC_HSC7Link 1315
SDPDURRR_BSC_HSC7Link 1316
SDPDURTR_BSC_HSC7Link 1316
SDPDUTRN_BSC_HSC7Link 1316
SL10SCAN_BSC_C7Link 1317
SL10SCAN_BSC_HSC7Link 1317
SLPARMGP_BSC_C7Link 1317
SLPARMGP_BSC_HSC7Link 1318
SYS7IND 1318
SYS7IND_C7SL1 1318
TDCNGLV1_BSC_C7Link 1318
TDCNGLV1_BSC_HSC7Link 1319
TDCNGLV2_BSC_C7Link 1319
TDCNGLV2_BSC_HSC7Link 1319
TDCNGLV3_BSC_C7Link 1320
TDCNGLV3_BSC_HSC7Link 1320
THRACHOV_BSC_C7Link 1320
THRMSUER_BSC_C7Link 1321
THRNEGAK_BSC_C7Link 1321
TLNKACTV_BSC_C7Link 1321
TLNKACTV_BSC_HSC7Link 1322
TOTOCMSG_BSC_HSC7Link 1322
TOTOCMSU_BSC_C7Link 1322
TOTOCOCT_BSC_C7Link 1322
TOTOCOCT_BSC_HSC7Link 1323
TOTPRIO0_BSC_C7Link 1323
TOTPRIO0_BSC_HSC7Link 1323
TOTPRIO1_BSC_C7Link 1324
TOTPRIO1_BSC_HSC7Link 1324
TOTPRIO2_BSC_C7Link 1324
TOTPRIO2_BSC_HSC7Link 1325
TOTPRIO3_BSC_C7Link 1325
TOTPRIO3_BSC_HSC7Link 1325

TOTTRP 1326
TRANOCT_BSC_C7Link 1326
TRANOCT_BSC_HSC7Link 1326
UNAVAILDUR 1326
UNAVRBLDUR 1327
UNAVSLFDUR 1327
UNEXPDUS_BSC_HSC7Link 1327
BSC_SS7LinkSet Primitive Calculations 1328
C7_LSTL_AvgRX 1328
C7_LSTL_AvgTX 1328
GRAPHmultiLineSeparator 1328
INTERVALS 1328
Link_Unavailable 1328
NUMDAYS 1329
NUMHOURS 1329
NumLinks 1329
PercentageLinkAvailability 1329
PercentageLinksetInService 1329
RX_AvgLink 1329
RX_MSUS 1329
RX_Octets 1330
TX_AvgLink 1330
TX_MSUS 1330
TX_Octets 1330
VENDORTECH 1330
BSC_SS7LinkSet Peg Counts 1330
ASPADUR_BSC 1330
ASPINA_BSC 1331
AVLINKS_BSC_C7LinkSet 1331
AVLINKS_SS7HSLS 1331
BSS_RELEASE 1332
CLUSTERCODE_BSC_SS7LS 1332
ICUICELS_SS7HSLS 1332
INCCELLS_SS7HSLS 1332
LINKS_BSC_C7LinkSet 1333
LINKS_SS7HSLS 1333
LSMTCST_BSC_C7LinkSet 1333
LSMTCST_SS7HSLS 1334
MEMBERCODE_BSC_SS7LS 1334
MSGSRCVD_SS7HSLS 1334
MSGSTRAN_SS7HSLS 1335
MSURECD_BSC_C7LinkSet 1335
MSURETRN_BSC_C7LinkSet 1335
MSUTRAN_BSC_C7LinkSet 1336
N10SCAN_BSC_C7LinkSet 1336
N10SCAN_SS7HSLS 1336
OGUICELS_SS7HSLS 1336
OOSLINKS_BSC_C7LinkSet 1337
OOSLINKS_SS7HSLS 1337
OUTCELLS_SS7HSLS 1337
PDUOCTRC_SS7HSLS 1338

© Copyright IBM Corp. 2008, 2009. All Rights Reserved.

PDUOCTTR_SS7HSLS 1338
PDUSRCVD_SS7HSLS 1338
PDUSTRAN_SS7HSLS 1339
PERLEN 1339
RECVDOCT_BSC_C7LinkSet 1339
RECVDOCT_SS7HSLS 1339
RETRNOCT_BSC_C7LinkSet 1340
SDOCTRCV_SS7HSLS 1340
SDOCTRTR_SS7HSLS 1340
SDOCTTRN_SS7HSLS 1341
SDPDURCV_SS7HSLS 1341
SDPDURTR_SS7HSLS 1341
SDPDUTRN_SS7HSLS 1341
STUNADURAT_BSC 1342
SYS7IND_BSC_C7ADJSLP 1342
SYS7IND_BSC_C7SLSET 1342
TDLSINAC_BSC_C7LinkSet 1343
TDLSINAC_SS7HSLS 1343
TRANOCT_BSC_C7LinkSet 1343
TRANOCT_SS7HSLS 1344
UAVLINKS_BSC_C7LinkSet 1344
UAVLINKS_SS7HSLS 1344
BSC_SS7RouteSet Primitive Calculations 1345
GRAPHmultiLineSeparator 1345
INTERVALS 1345
LocalName 1345
NUMDAYS 1345
NUMHOURS 1345
VENDORTECH 1345
BSC_SS7RouteSet Peg Counts 1346
BSS_RELEASE 1346
PERLEN 1346
STINACNT_BSC 1346
STINADURAT_BSC 1346
SYS7IND_BSC_C7RTSET 1346
BTSSite Primitive Calculations 1347
GRAPHmultiLineSeparator 1347
INTERVALS 1347
NUMDAYS 1347
NUMHOURS 1347
VENDORTECH 1347
BTSSite Peg Counts 1348
BSS_RELEASE 1348
PERLEN 1348
Cell Primitive Calculations 1348
Active_PDCH 1348
Active_Preempted_PDCH 1348
Alloc_Failure% 1348
AvailableSDCCH 1348
Correlation 1348

CS12DLACK_and_RETRANSDL 1349
CS12DLSCHED_and_RBCDL 1349
CS12ULACK_and_RETRANSUL 1349
CS12ULSCHED_and_RBCUL 1349
DIMENSION 1349
DropBadQualitys 1349
DropLow_ss 1349
ExtraChan_Req 1350
Forecast_Value1 1350
Forecast_Value2 1350
Forecast_Value3 1350
GRAPHmultiLineSeparator 1350
GROWTH 1350
HO_CAUSE_BKC% 1351
HO_CAUSE_BKC%_RUP 1351
HO_CAUSE_BLC% 1351
HO_CAUSE_BLC%_RUP 1351
HO_CAUSEALL 1351
HO_CAUSEALL_RUP 1351
HO_CAUSEDIST% 1351
HO_CAUSEDIST%_RUP 1352
HO_CAUSEDWQL% 1352
HO_CAUSEDWQL%_RUP 1352
HO_CAUSEHCS 1352
HO_CAUSEHCS_RUP 1352
HO_CAUSEPWBGHI% 1352
HO_CAUSEPWBGHI%_RUP 1352
HO_CAUSEPWBGLO% 1353
HO_CAUSEPWBGLO%_RUP 1353
HO_CAUSEUPQL% 1353
HO_CAUSEUPQL%_RUP 1353
HO_SUCHIHR% 1353
HO_SUCHIHR%_RUP 1353
HOASBCL 1353
HOASBCL_RUP 1354
HOASWCL 1354
HOASWCL_RUP 1354
HOATTLS 1354
HODUPFT 1354
HODUPFT_RUP 1354
HOE_LOST 1354
HOE_LOST% 1355
HOE_LOST%_RUP 1355
HOE_LOST_E_RUP 1355
HOE_LOST_RUP 1355
HOE_SUC 1355
HOE_SUC_RUP 1355
HOE_TOT 1355
HOE_TOT_RUP 1356
HOI_LOST 1356
HOI_LOST% 1356

© Copyright IBM Corp. 2008, 2009. All Rights Reserved.

HOI_LOST%_RUP 1356
HOI_LOST_RUP 1356
HOI_SUC 1356
HOI_SUC_RUP 1356
HOI_TOT 1357
HOI_TOT_RUP 1357
HOINBOCH 1357
HOINBQA 1357
HOINDQA 1357
HOINSUC 1357
HOINUQA 1357
HOSUCBCL 1358
HOSUCBCL_RUP 1358
HOSUCLS 1358
HOSUCWCL 1358
HOSUCWCL_RUP 1358
HOVERCNT 1358
HOVERCNT_E_RUP 1358
HOVERCNT_RUP 1359
IDLU_BAND1 1359
IDLU_BAND2 1359
IDLU_BAND3 1359
IDLU_BAND4 1359
IDLU_BAND5 1359
IHO_LOST 1359
IHO_LOST% 1360
IHO_TOT 1360
INTERVALS 1360
MAXTSDL 1360
MC19ULACK_and_ERETRANSUL 1360
MC19ULSCHED_and_ERBCUL 1360
N1Days_FCAST_Ch 1360
N2Days_FCAST_Ch 1361
N3Days_FCAST_Ch 1361
NUMDAYS 1361
NUMHOURS 1361
PABH3 1361
PABH5 1361
PDCH_Alloc 1361
Peak_Usage 1362
PercentageCallSetupSuccessRate 1362
RA_ACC% 1362
RA_ImmAsgnAtt 1362
RA_TOT 1362
Req_Ch 1362
RL_EGPRS_Quality_UL% 1362
RL_GPRS_Quality_DL% 1363
RL_GPRS_Quality_UL% 1363
Sample_Size 1363
SD_CONG% 1363
SD_DR_ALL% 1363

SD_MHT 1363
SD_TRAFF_VOL 1363
SEG_LLC_PDU_Data_DL 1364
SEG_LLC_PDU_Data_DL1 1364
SEG_LLC_PDU_Data_DL2 1364
SEG_LLC_PDU_Data_DL3 1364
SEG_LLC_PDU_Data_UL 1364
SEG_LLC_PDU_Data_UL1 1364
SEG_LLC_PDU_Data_UL2 1364
SEG_LLC_PDU_Data_UL3 1365
SEG_LLC_PDU_Throughput_DL 1365
SEG_LLC_PDU_Throughput_DL1 1365
SEG_LLC_PDU_Throughput_DL2 1365
SEG_LLC_PDU_Throughput_DL3 1365
SEG_LLC_PDU_Throughput_UL 1365
SEG_LLC_PDU_Throughput_UL1 1365
SEG_LLC_PDU_Throughput_UL2 1366
SEG_LLC_PDU_Throughput_UL3 1366
SG_LLC_PDU_Data_DL 1366
SG_LLC_PDU_Data_DL1 1366
SG_LLC_PDU_Data_DL2 1366
SG_LLC_PDU_Data_DL3 1366
SG_LLC_PDU_Data_UL 1366
SG_LLC_PDU_Data_UL1 1367
SG_LLC_PDU_Data_UL2 1367
SG_LLC_PDU_Data_UL3 1367
SG_LLC_PDU_Throughput_DL 1367
SG_LLC_PDU_Throughput_DL1 1367
SG_LLC_PDU_Throughput_DL2 1367
SG_LLC_PDU_Throughput_DL3 1367
SG_LLC_PDU_Throughput_UL 1368
SG_LLC_PDU_Throughput_UL1 1368
SG_LLC_PDU_Throughput_UL2 1368
SG_LLC_PDU_Throughput_UL3 1368
TBF_EGPRS_DL 1368
TBF_EGPRS_UL 1368
TBF_GPRS_DL 1368
TBF_GPRS_UL 1369
TBF_PDCH_EGPRS_DL 1369
TBF_PDCH_EGPRS_UL 1369
TBF_PDCH_GPRS_DL 1369
TBF_PDCH_GPRS_UL 1369
TC_AVAIL% 1369
TC_AVAIL%_Rank 1369
TCF_AV_NR 1370
TCF_CONGS_AS% 1370
TCF_CONGS_AS%_Rank 1370
TCF_DR_ALL_C% 1370
TCF_DR_ALL_C%_Rank 1370
TCF_DR_BQ 1370
TCF_DR_SS_C 1371

© Copyright IBM Corp. 2008, 2009. All Rights Reserved.

TCF_MNHOLD 1371
TCF_TRAFF_VOL 1371
TCF_TRAFF_VOL_BH 1371
TCH_Critical_Carried 1371
TCH_Critical_Offerred 1371
TCH_Current_Util% 1371
TCH_Est_GOS_% 1372
TCH_Est_Lost 1372
TCH_Est_Lost_H 1372
TCH_Exhaust_Date 1372
TCH_Exhaust_Days 1372
TCH_Final_Util% 1372
TCH_GOS 1372
TCH_Traffic_Off 1373
TCH_Util_Offered 1373
VENDORTECH 1373
Cell Peg Counts 1373
ACCEGEXTIPLAT 1373
ACCEGNOEXTIPLAT 1373
ACCEGRLIPLAT 1374
ACCGEXTIPLAT 1374
ACCGNOEXTIPLAT 1374
ACREJEIT 1375
ACREQEIT 1375
ACTEUSE 1375
ACTGUSE 1376
ACTUSESCAN 1376
ALLPDCHACC 1376
ALLPDCHACC0 1377
ALLPDCHACCSUB 1377
ALLPDCHACTACC 1377
ALLPDCHACTACCSUB 1378
ALLPDCHPEAK 1378
ALLPDCHSCAN 1378
ALLPDCHSCAN0 1379
ALLPDCHSCANSUB 1379
AMRABHOSUCFRHR 1379
ATAMRLDHRFRHO 1380
ATNAMRLDHRFRHO 1380
AVAILRBLKS 1380
AWABHOSUCFRHR 1381
BCDTCBCOM 1381
BCDTCBSUC 1381
BCLOSSCOM 1382
BCLOSSSUC 1382
BDWNACC 1382
BRHILAYER 1383
BSS_RELEASE 1383
BULTBFSCAN 1383
CAVAACC 1383
CAVASCAN 1384

Updated: 2009-07-22

CAVASCANSUB 1384
CAVASUB 1384
CCALLS 1384
CCALLSSUB 1385
CCHHOCNT 1385
CCHHOSUC 1385
CCHHOTOCH 1386
CCONGS 1386
CCONGSSUB 1386
CDISQA 1387
CDISQASUB 1387
CDISSS 1387
CDISSS1 1388
CDISSS2 1388
CDISSS3 1388
CDISSS4 1388
CDISSS5 1389
CDISSSSUB 1389
CDISTA 1389
CELLMOVED 1390
CELLPPRS 1390
CESTCHACTIV 1390
CESTIMMASS 1391
CLSTIME 1391
CLUDISQA 1391
CLUDISQA_CELL7SPARE 1392
CLUDISQASUB 1392
CLUDISQASUB_CELL8SPARE 1392
CLUDISSS 1393
CLUDISSS_CELL5SPARE 1393
CLUDISSSSUB 1393
CLUDISSSSUB_CELL6SPARE 1394
CLUDISTA 1394
CLUDISTA_CELL4SPARE 1394
CLUMSESTAB 1395
CLUMSESTAB_CELL1SPARE 1395
CLUMSESTABSUB_CELL2SPARE 1395
CLUNDROP 1396
CLUNDROP_CELL3SPARE 1396
CMSESTAB 1396
CMSESTABSUB 1396
CNDROP 1397
CNRELCONG 1397
CNRELCONGSUB 1397
CNROCNT 1398
CNSCAN 1398
CNSCANSUB 1398
CNUCHCNT 1399
CNUCHSUB 1399
CONFATTC 1399
CONFATTT 1400

© Copyright IBM Corp. 2008, 2009. All Rights Reserved.

CRSULREL 1400
CRSULRELSUB 1400
CS12DLACK 1401
CS12DLACKSUB 1401
CS12DLSCHED 1401
CS12DLSCHEDSUB 1402
CS12ULACK 1402
CS12ULACKSUB 1402
CS12ULSCHED 1403
CS12ULSCHEDSUB 1403
CS14DLACK 1403
CS14DLACKSUB 1404
CS14DLSCHED 1404
CS14DLSCHEDSUB 1404
CS14QDLACK 1405
CS14QDLACKSUB 1405
CS14QDLSCHED 1405
CS14QDLSCHEDSUB 1406
CSCSOPTCONG 1406
CSCSTCONG 1406
CSIMMASS 1407
CSMSDWN 1407
CSMSUP 1407
CTCONGS 1408
CTCONSUB 1408
CTRALACC 1408
CTRALSUB 1408
DISBQA_CELEVENTD 1409
DISBQA_CELLEVENT 1409
DISBSS_CELEVENTD 1409
DISBSS_CELLEVENT 1410
DISCIMMASS 1410
DISETA_CELEVENTD 1410
DISETA_CELLEVENT 1411
DISFER 1411
DISNORM_CELEVENTD 1411
DISNORM_CELLEVENT 1412
DISPH 1412
DISRET3G 1412
DLACTBPDCH 1412
DLACTEPDCH 1413
DLACTGPDCH 1413
DLACTTBFPBPDCH 1413
DLACTTBFPEPDCH 1414
DLACTTBFPGPDCH 1414
DLBGEGDATA 1414
DLBGEGPFC 1415
DLBGEGTHR 1415
DLBGGDATA 1415
DLBGGPFC 1416
DLBGGTHR 1416

Updated: 2009-07-22

DLBPDCH 1416
DLEPDCH 1416
DLGMMVOL 1417
DLGPDCH 1417
DLINTBGVOL 1417
DLMSEGDATA 1418
DLMSEGTHR 1418
DLMSGDATA 1418
DLMSGTHR 1419
DLSAICVOL 1419
DLSTRVOL 1419
DLTBFEST 1420
DLTBFPBPDCH 1420
DLTBFPEPDCH 1420
DLTBFPGPDCH 1421
DLTHP1EGDATA 1421
DLTHP1EGPFC 1421
DLTHP1EGTHR 1421
DLTHP1GDATA 1422
DLTHP1GPFC 1422
DLTHP1GTHR 1422
DLTHP2EGDATA 1423
DLTHP2EGPFC 1423
DLTHP2EGTHR 1423
DLTHP2GDATA 1424
DLTHP2GPFC 1424
DLTHP2GTHR 1424
DLTHP3EGDATA 1425
DLTHP3EGPFC 1425
DLTHP3EGTHR 1425
DLTHP3GDATA 1425
DLTHP3GPFC 1426
DLTHP3GTHR 1426
DTCBCOMUL 1426
DTCBSUCUL 1427
DTMACTEUSE 1427
DTMACTGUSE 1427
DTMACTUSESCAN 1428
DTMDLEGDATA 1428
DTMDLGDATA 1428
DTMDLMAXTS 1429
DTMDLMUTIL 1429
DTMDLSTRDATA 1429
DTMDLTBFSCAN 1430
DTMEGDLTHP 1430
DTMEGULTHP 1430
DTMGDLTHP 1431
DTMGULTHP 1431
DTMOTHLDIS 1431
DTMOTHULREL 1432
DTMPREEMPTULREL 1432

© Copyright IBM Corp. 2008, 2009. All Rights Reserved.

DTMRRLDIS 1432
DTMTFILDIS 1433
DTMULABISFAILRES 1433
DTMULEGDATA 1433
DTMULGDATA 1434
DTMULMAXTS 1434
DTMULMUTIL 1434
DTMULOTHFAILRES 1435
DTMULRELLOST 1435
DTMULSTRDATA 1435
DTMULSUCRES 1436
DTMULTBFSCAN 1436
DTMULTFIFAILRES 1436
EASDLACTSBL 1437
EASDLCAPSBL 1437
EASULACTMREP 1437
EASULCAPMREP 1438
EGEXTIPLAT 1438
EGNOEXTIPLAT 1438
EGRLIPLAT 1438
EITDLBPDCH 1439
EITDLEPDCH 1439
EITDLETBF 1439
EITDLGPDCH 1440
EITDLGTBF 1440
EITTBFSCAN 1440
EITULBPDCH 1441
EITULEPDCH 1441
EITULETBF 1441
EITULGPDCH 1442
EITULGTBF 1442
EPDCHGE 1442
ERBCUL 1443
ERETRANSUL 1443
EULTBFSCAN 1443
FAILDLANSW 1444
FAILDLTBFEST 1444
FAILPH 1444
FLUDISC 1445
FLUMOVE 1445
FLX16ATT 1445
FLX16SUCC 1446
FLX64ATT 1446
FLX64SUCC 1446
FLX8SUCC 1446
FLXCS16ATT 1447
FLXCS16SUCC 1447
GBR10FAIL 1447
GBR10LOW 1448
GBR10REQ 1448
GBR120FAIL 1448

Updated: 2009-07-22

GBR120LOW 1449
GBR120REQ 1449
GBR160FAIL 1449
GBR160LOW 1450
GBR160REQ 1450
GBR20FAIL 1450
GBR20LOW 1451
GBR20REQ 1451
GBR30FAIL 1451
GBR30LOW 1452
GBR30REQ 1452
GBR40FAIL 1452
GBR40LOW 1453
GBR40REQ 1453
GBR60FAIL 1453
GBR60LOW 1454
GBR60REQ 1454
GBR80FAIL 1454
GBR80LOW 1455
GBR80REQ 1455
GETBFONPDCH 1455
GEXTIPLAT 1456
GNOETBFONPDCH 1456
GNOEXTIPLAT 1456
GPRSAVA 1457
GPRSCELLAVA 1457
GULTBFSCAN 1457
HOAATOL 1458
HOAATOL_CELEVENTS 1458
HOAATUL 1458
HOAATUL_CELEVENTS 1459
HOATFRHRAMR 1459
HOATFRHRAW 1459
HOATFRHRNAMR 1460
HOATHRFRAMR 1460
HOATHRFRNAMR 1460
HOATTBL_CELEVENTH 1461
HOATTBL_CELLEVENT 1461
HOATTHRPACK 1461
HOATTLS_CELEVENTH 1461
HOATTLS_CELLEVENT 1462
HOATTOLMAXIHO 1462
HOATTPH 1462
HOATTULBQ 1463
HOATTULMAXIHO 1463
HOINBOCH_CELEVENTI 1463
HOINBOCH_CELLEVENT 1464
HOINBQA_CELEVENTI 1464
HOINBQA_CELLEVENT 1464
HOINBQA0 1465
HOINDQA_CELEVENTI 1465

© Copyright IBM Corp. 2008, 2009. All Rights Reserved.

HOINDQA_CELLEVENT 1465
HOINDQA0 1465
HOINSUC_CELEVENTI 1466
HOINSUC_CELLEVENT 1466
HOINUQA_CELEVENTI 1466
HOINUQA_CELLEVENT 1467
HOINUQA0 1467
HONIDQA0 1467
HONIDQA0_DL 1468
HONIUQA0 1468
HONIUQA0_UP_DL 1468
HOSUCBL_CELEVENTH 1469
HOSUCBL_CELLEVENT 1469
HOSUCFRHRAMR 1469
HOSUCFRHRAW 1470
HOSUCFRHRNAMR 1470
HOSUCHRFRAMR 1470
HOSUCHRFRNAMR 1471
HOSUCHRPACK 1471
HOSUCLS_CELEVENTH 1471
HOSUCLS_CELLEVENT 1472
HOSUCOL 1472
HOSUCOL_CELEVENTS 1472
HOSUCOLMAXIHO 1472
HOSUCTCHOPT 1473
HOSUCUL 1473
HOSUCUL_CELEVENTS 1473
HOSUCULBQ 1474
HOSUCULMAXIHO 1474
IAULREL 1474
IAULRELSUB 1475
ID1_CELEVENTD 1475
ID1_CELEVENTH 1475
ID1_CELEVENTI 1476
ID1_CELEVENTS 1476
ID1_CELLCCHHO 1476
ID1_CELLCONF 1476
ID1_CELLEVENT 1477
INT10BREGPRSTBF 1477
INT10BRGPRSTBF 1477
INT12BRGPRSTBF 1478
INT14BRGPRSTBF 1478
INT15BREGPRSTBF 1478
INT16BRGPRSTBF 1479
INT18BRGPRSTBF 1479
INT20BREGPRSTBF 1479
INT25BREGPRSTBF 1480
INT30BREGPRSTBF 1480
INT35BREGPRSTBF 1480
INT40BREGPRSTBF 1481
INT45BREGPRSTBF 1481

Updated: 2009-07-22

INT50BREGPRSTBF 1481
INT55BREGPRSTBF 1482
INT8BRGPRSTBF 1482
INTERCNT 1482
ITFOSIB1 1483
ITFOSIB2 1483
ITFOSIB3 1483
ITFOSIB4 1484
ITFOSIB5 1484
ITFUSIB1 1484
ITFUSIB2 1485
ITFUSIB3 1485
ITFUSIB4 1485
ITFUSIB5 1486
ITHOSIB1 1486
ITHOSIB2 1486
ITHOSIB3 1486
ITHOSIB4 1487
ITHOSIB5 1487
ITHUSIB1 1487
ITHUSIB2 1488
ITHUSIB3 1488
ITHUSIB4 1488
ITHUSIB5 1489
LCCLRELBUSYHI3 1489
LDISEST 1489
LDISOTH 1490
LDISRR 1490
LDISRRSUB 1490
LDISTFI 1491
LLCVOLDLEIT 1491
LLCVOLULEIT 1491
LOCEVAL 1492
LOLCOMUL 1492
LOLSUCUL 1492
LSTIME 1492
MAXEGTSDL 1493
MAXEGTSUL 1493
MAXGTSDL 1493
MAXGTSUL 1494
MC19DLACK 1494
MC19DLACKSUB 1494
MC19DLSCHED 1495
MC19DLSCHEDSUB 1495
MC19QDLACK 1495
MC19QDLACKSUB 1496
MC19QDLSCHED 1496
MC19QDLSCHEDSUB 1497
MC19QULACK 1497
MC19QULACKSUB 1497
MC19QULSCHED 1498

© Copyright IBM Corp. 2008, 2009. All Rights Reserved.

MC19QULSCHEDSUB 1498
MC19ULACK 1498
MC19ULACKSUB 1499
MC19ULSCHED 1499
MC19ULSCHEDSUB 1499
MEASPOSREQ 1500
MEASPOSRESP 1500
MOVECELLTBF 1500
MSESTDLTBF 1501
MSESTULDTMTBF 1501
MSESTULTBF 1501
MUTIL12 1502
MUTIL12UL 1502
MUTIL13 1502
MUTIL13UL 1503
MUTIL14 1503
MUTIL14UL 1503
MUTIL15 1503
MUTIL22 1504
MUTIL22UL 1504
MUTIL23 1504
MUTIL23UL 1505
MUTIL24 1505
MUTIL24UL 1505
MUTIL25 1506
MUTIL33 1506
MUTIL33UL 1506
MUTIL34 1507
MUTIL34UL 1507
MUTIL35 1507
MUTIL44 1507
MUTIL44UL 1508
MUTIL45 1508
MUTIL55 1508
MUTILBASIC 1509
MUTILBASICUL 1509
MUTILEGPRS 1509
MUTILEGPRSUL 1510
MUTILGPRS 1510
MUTILGPRSUL 1510
NAMRABHOSUCFRHR 1511
NIQLOWCNT 1511
NIQLOWUTRANCNT 1511
NOACCOF 1512
NOACCOH 1512
NOACCUF 1512
NOACCUH 1512
NONAVFCH 1513
NONAVHCH 1513
NPCALLOCCNT 1513
NQPCCNT 1514

Updated: 2009-07-22

NQPCUTRANCNT 1514
OLSCLDCOM 1514
OLSCLDSUC 1515
OTHULREL 1515
OVERLOADREJCON 1515
PAGCSBVCI 1516
PAGCSONPPCH 1516
PAGDISCPPCH 1516
PAGETOOOLD 1517
PAGPCHCONG 1517
PAGPSONPPCH 1517
PCHALLATT 1518
PCHALLFAIL 1518
PCHROPRETRY 1518
PCHRREQ 1519
PCHRSCAN 1519
PCHRZRETRY 1519
PCHZRETRY 1519
PDCHDLEGPRS 1520
PDCHDLGPRS 1520
PDCHULEGPRS 1520
PDCHULGPRS 1521
PDPRAC 1521
PDRAC 1521
PERLEN 1522
PMTATT 1522
PMTCSABCONG 1522
PMTPSABCONG 1522
PMTREF 1523
PPAGCSBVCI 1523
PREEMPTPDCH 1523
PREEMPTPDCHSUB 1524
PREEMPTTBF 1524
PREEMPTULREL 1524
PREEMTPDCHSUB 1525
PREJABISCONG 1525
PREJOTH 1525
PREJTFI 1526
PSCHREQ 1526
PSIMMASS 1526
Q1TDDLEIT 1526
Q1TDULEIT 1527
Q2TDDLEIT 1527
Q2TDULEIT 1527
Q3TDDLEIT 1528
Q3TDULEIT 1528
QOSWDLBASIC 1528
QOSWDLEGPRS 1529
QOSWDLGPRS 1529
QOSWULBASIC 1529
QOSWULEGPRS 1530

© Copyright IBM Corp. 2008, 2009. All Rights Reserved.

QOSWULGPRS 1530
QUAL00DL 1530
QUAL00UL 1530
QUAL10DL 1531
QUAL10UL 1531
QUAL20DL 1531
QUAL20UL 1532
QUAL30DL 1532
QUAL30UL 1532
QUAL40DL 1533
QUAL40UL 1533
QUAL50DL 1533
QUAL50UL 1534
QUAL60DL 1534
QUAL60UL 1534
QUAL70DL 1534
QUAL70UL 1535
RAACCFA 1535
RAANPAG 1535
RAAPAG1 1536
RAAPAG2 1536
RAAPOPS 1536
RACALR1 1537
RACALR2 1537
RACALRE 1537
RAEMCAL 1538
RAORDAT 1538
RAORSPE 1538
RAOSREQ 1539
RAOTHER 1539
RATRHFAANPAG 1539
RATRHFAEMCAL 1540
RATRHFAOTHER 1540
RATRHFAREG 1540
RBCDL 1541
RBCUL 1541
REJCSIMMASS 1541
REJPSIMMASS 1541
RETRANSDL 1542
RETRANSUL 1542
RLCEDLEITSCHED 1542
RLCEDLVOLEIT 1543
RLCEULEITSCHED 1543
RLCEULVOLEIT 1543
RLCGDLEITSCHED 1544
RLCGDLVOLEIT 1544
RLCGULEITSCHED 1544
RLCGULVOLEIT 1545
RQHIGHCNT 1545
RQHIUTRANCNT 1545
RQLOSSCNT 1546

Updated: 2009-07-22

RQLOSSUTRANCNT 1546
RQT11CNT 1546
RQTQHOCNT 1547
SAICSCAN 1547
SAICTRALACC 1547
SCLDCOMUL 1548
SCLDSUCUL 1548
State 1548
STRBPDCH 1549
STREPDCH 1549
STRGPDCH 1549
SUCAMRLDHRFRHO 1550
SUCNAMRLDHRFRHO 1550
TACCSCAN0 1550
TAF1DLFER 1551
TAF1DLSUBFER 1551
TAF1ULFER 1551
TAF1ULSUBFER 1552
TAF2DLFER 1552
TAF2DLSUBFER 1552
TAF2ULFER 1553
TAF2ULSUBFER 1553
TAF3DLFER 1553
TAF3DLSUBFER 1554
TAF3ULFER 1554
TAF3ULSUBFER 1554
TAF4DLFER 1555
TAF4DLSUBFER 1555
TAF4ULFER 1555
TAF4ULSUBFER 1556
TAF5DLFER 1556
TAF5DLSUBFER 1556
TAF5ULFER 1557
TAF5ULSUBFER 1557
TAH1DLFER 1557
TAH1DLSUBFER 1558
TAH1ULFER 1558
TAH1ULSUBFER 1558
TAH2DLFER 1559
TAH2DLSUBFER 1559
TAH2ULFER 1559
TAH2ULSUBFER 1560
TAH3DLFER 1560
TAH3DLSUBFER 1560
TAH3ULFER 1561
TAH3ULSUBFER 1561
TAH4DLFER 1561
TAH4DLSUBFER 1562
TAH4ULFER 1562
TAH4ULSUBFER 1562
TAH5DLFER 1563

© Copyright IBM Corp. 2008, 2009. All Rights Reserved.

TAH5DLSUBFER 1563
TAH5ULFER 1563
TAH5ULSUBFER 1564
TAOLCOMUL 1564
TAOLSUCUL 1564
TASSALL 1565
TASSATT 1565
TASSATTVGCS 1565
TASSMS5 1566
TASSSUCVGCS 1566
TAVAACC 1566
TAVAACC0 1566
TAVASCAN 1567
TAVASCANSUB 1567
TAVASUB 1567
TAW1DLFER 1568
TAW1DLSUBFER 1568
TAW1ULFER 1568
TAW1ULSUBFER 1569
TAW2DLFER 1569
TAW2DLSUBFER 1569
TAW2ULFER 1570
TAW2ULSUBFER 1570
TAW3DLFER 1570
TAW3DLSUBFER 1571
TAW3ULFER 1571
TAW3ULSUBFER 1571
TAW4DLFER 1572
TAW4DLSUBFER 1572
TAW4ULFER 1572
TAW4ULSUBFER 1573
TAW5DLFER 1573
TAW5DLSUBFER 1573
TAW5ULFER 1574
TAW5ULSUBFER 1574
TBFDLEGPRS 1574
TBFDLEGPRS_TRAFFGPRS 1575
TBFDLEGPRSCAP 1575
TBFDLGPRS 1575
TBFDLGPRS_TRAFFGPRS 1575
TBFDLGPRSCAP 1576
TBFPDLEGPRS 1576
TBFPDLGPRS 1576
TBFPREEMPEST 1577
TBFPULEGPRS 1577
TBFPULGPRS 1577
TBFULEGPRS 1578
TBFULEGPRS_TRAFFGPRS 1578
TBFULEGPRSCAP 1578
TBFULGPRS 1579
TBFULGPRS_TRAFFGPRS 1579

Updated: 2009-07-22

TBFULGPRSCAP 1579
TBFUPS 1580
TCASSALL 1580
TCHSIG 1580
TDTMALLOCATT 1580
TDTMATT 1581
TDWNACC 1581
TDWNSCAN 1581
TEF1DLFER 1582
TEF1DLSUBFER 1582
TEF1ULFER 1582
TEF1ULSUBFER 1583
TEF2DLFER 1583
TEF2DLSUBFER 1583
TEF2ULFER 1584
TEF2ULSUBFER 1584
TEF3DLFER 1584
TEF3DLSUBFER 1585
TEF3ULFER 1585
TEF3ULSUBFER 1585
TEF4DLFER 1586
TEF4DLSUBFER 1586
TEF4ULFER 1586
TEF4ULSUBFER 1587
TEF5DLFER 1587
TEF5DLSUBFER 1587
TEF5ULFER 1588
TEF5ULSUBFER 1588
TF1DLFER 1588
TF1DLSUBFER 1589
TF1ULFER 1589
TF1ULSUBFER 1589
TF2DLFER 1590
TF2DLSUBFER 1590
TF2ULFER 1590
TF2ULSUBFER 1591
TF3DLFER 1591
TF3DLSUBFER 1591
TF3ULFER 1592
TF3ULSUBFER 1592
TF4DLFER 1592
TF4DLSUBFER 1593
TF4ULFER 1593
TF4ULSUBFER 1593
TF5DLFER 1594
TF5DLSUBFER 1594
TF5ULFER 1594
TF5ULSUBFER 1595
TFCALLS 1595
TFCALLSSUB 1595
TFCASSALL 1596

© Copyright IBM Corp. 2008, 2009. All Rights Reserved.

TFCASSALLSUB 1596
TFCONGPGSM 1596
TFCONGPGSMSUB 1597
TFCONGSAS 1597
TFCONGSASSUB 1597
TFCONGSHO 1597
TFCONGSHOSUB 1598
TFDISFERBL 1598
TFDISFERBLA 1598
TFDISFERBLSUB 1599
TFDISFERBLSUBA 1599
TFDISFERDL 1599
TFDISFERDLA 1600
TFDISFERDLSUB 1600
TFDISFERDLSUBA 1600
TFDISFERUL 1601
TFDISFERULA 1601
TFDISFERULSUB 1601
TFDISFERULSUBA 1601
TFDISQA 1602
TFDISQABL 1602
TFDISQABLA 1602
TFDISQABLSUB 1603
TFDISQABLSUBA 1603
TFDISQADL 1603
TFDISQADLA 1604
TFDISQADLSUB 1604
TFDISQADLSUBA 1604
TFDISQAUL 1605
TFDISQAULA 1605
TFDISQAULSUB 1605
TFDISQAULSUBA 1606
TFDISSBL 1606
TFDISSBLA 1606
TFDISSBLSUB 1606
TFDISSBLSUBA 1607
TFDISSDL 1607
TFDISSDLA 1607
TFDISSDLSUB 1608
TFDISSDLSUBA 1608
TFDISSS1 1608
TFDISSS2 1609
TFDISSS3 1609
TFDISSS4 1609
TFDISSS5 1610
TFDISSUL 1610
TFDISSULA 1610
TFDISSULSUB 1611
TFDISSULSUBA 1611
TFDISTA 1611
TFDISTAA 1612

Updated: 2009-07-22

TFDROPPGSM 1612
TFDROPPGSMSUB 1612
TFDUALASSALL 1613
TFDUALCASSALL 1613
TFDUALNDROP 1613
TFDUALSCAN 1613
TFDUALTRALACC 1614
TFESTPGSM 1614
TFESTPGSMSUB 1614
TFFERBLDIS0 1615
TFFERDLDIS0 1615
TFFERULDIS0 1615
TFHSCSDESEC 1616
TFHSCSDESECSUB 1616
TFHSCSDMAIN 1616
TFHSCSDMAINSUB 1617
TFHSCSDNESEC 1617
TFHSCSDNESECSUB 1617
TFMSESTB 1618
TFMSESTBSUB 1618
TFNCEDROP 1618
TFNCEDROPSUB 1619
TFNDROP 1619
TFNDROP0 1619
TFNDROPSUB 1620
TFNRELCONG 1620
TFNRELCONGSUB 1620
TFNSCAN_CELTCHF 1620
TFNSCAN_CELTCHFP 1621
TFQABLDIS0 1621
TFQADLDIS0 1621
TFQAULDIS0 1622
TFSPV1DTMSUC 1622
TFSPV2DTMSUC 1622
TFSPV3DTMSUC 1623
TFSPV5DTMSUC 1623
TFSSBLDIS0 1623
TFSSDLDIS0 1624
TFSSULDIS0 1624
TFSUDLOS 1624
TFSUDLOS0 1624
TFSUDLOSA 1625
TFSUDLOSSUB 1625
TFSUDLOSSUBA 1625
TFTADIS0 1626
TFTCONGS 1626
TFTCONSUB 1626
TFTHARDCONGS 1627
TFTHARDCONGSSUB 1627
TFTRALACC 1627
TFTRALACC0 1628

© Copyright IBM Corp. 2008, 2009. All Rights Reserved.

TFTRALPACC 1628
TFTRALPACCSUB 1628
TFTRALSUB 1628
TFV1CALLS 1629
TFV1CALLSSUB 1629
TFV1CONGS 1629
TFV1CONGSAS 1630
TFV1CONGSASSUB 1630
TFV1CONGSHO 1630
TFV1CONGSHOSUB 1631
TFV1CONGSSUB 1631
TFV1FER 1631
TFV1FERTF 1632
TFV1NSCAN 1632
TFV1NSCANSUB 1632
TFV1TCONGS 1632
TFV1TCONSUB 1633
TFV1TRALACC 1633
TFV1TRALSUB 1633
TFV2CALLS 1634
TFV2CALLSSUB 1634
TFV2CONGS 1634
TFV2CONGSAS 1635
TFV2CONGSASSUB 1635
TFV2CONGSHO 1635
TFV2CONGSHOSUB 1636
TFV2CONGSSUB 1636
TFV2FER 1636
TFV2FERTF 1636
TFV2NSCAN 1637
TFV2NSCANSUB 1637
TFV2TCONGS 1637
TFV2TCONSUB 1638
TFV2TRALACC 1638
TFV2TRALSUB 1638
TFV3CALLS 1639
TFV3CALLSSUB 1639
TFV3CM1DL 1639
TFV3CM1UL 1640
TFV3CM2DL 1640
TFV3CM2UL 1640
TFV3CM3DL 1640
TFV3CM3UL 1641
TFV3CM4DL 1641
TFV3CM4UL 1641
TFV3CONGSAS 1642
TFV3CONGSASSUB 1642
TFV3CONGSHO 1642
TFV3CONGSHOSUB 1643
TFV3FERCM1 1643
TFV3FERCM2 1643

Updated: 2009-07-22

TFV3FERCM3 1644
TFV3FERCM4 1644
TFV3NSCAN 1644
TFV3TCONGS 1644
TFV3TCONSUB 1645
TFV3TFCM1 1645
TFV3TFCM2 1645
TFV3TFCM3 1646
TFV3TFCM4 1646
TFV3TRALACC 1646
TFV3TRALSUB 1647
TFV5CALLS 1647
TFV5CALLSSUB 1647
TFV5CM1DL 1648
TFV5CM1UL 1648
TFV5CM2DL 1648
TFV5CM2UL 1648
TFV5CM3DL 1649
TFV5CM3UL 1649
TFV5CONGSAS 1649
TFV5CONGSASSUB 1650
TFV5CONGSHO 1650
TFV5CONGSHOSUB 1650
TFV5FERCM1 1651
TFV5FERCM2 1651
TFV5FERCM3 1651
TFV5NSCAN 1652
TFV5TCONGS 1652
TFV5TCONSUB 1652
TFV5TFCM1 1653
TFV5TFCM2 1653
TFV5TFCM3 1653
TFV5TRALACC 1654
TFV5TRALSUB 1654
TH1DLFER 1654
TH1DLSUBFER 1655
TH1ULFER 1655
TH1ULSUBFER 1655
TH2DLFER 1656
TH2DLSUBFER 1656
TH2ULFER 1656
TH2ULSUBFER 1657
TH3DLFER 1657
TH3DLSUBFER 1657
TH3ULFER 1658
TH3ULSUBFER 1658
TH4DLFER 1658
TH4DLSUBFER 1659
TH4ULFER 1659
TH4ULSUBFER 1659
TH5DLFER 1660

© Copyright IBM Corp. 2008, 2009. All Rights Reserved.

TH5DLSUBFER 1660
TH5ULFER 1660
TH5ULSUBFER 1661
THCALLS 1661
THCALLSSUB 1661
THCASSALL 1662
THCASSALLSUB 1662
THCONGSAS 1662
THCONGSASSUB 1663
THCONGSHO 1663
THCONGSHOSUB 1663
THDISFERBL 1663
THDISFERBLA 1664
THDISFERBLSUB 1664
THDISFERBLSUBA 1664
THDISFERDL 1665
THDISFERDLA 1665
THDISFERDLSUB 1665
THDISFERDLSUBA 1666
THDISFERUL 1666
THDISFERULA 1666
THDISFERULSUB 1667
THDISFERULSUBA 1667
THDISQABL 1667
THDISQABLA 1667
THDISQABLSUB 1668
THDISQABLSUBA 1668
THDISQADL 1668
THDISQADLA 1669
THDISQADLSUB 1669
THDISQADLSUBA 1669
THDISQAUL 1670
THDISQAULA 1670
THDISQAULSUB 1670
THDISQAULSUBA 1671
THDISSBL 1671
THDISSBLA 1671
THDISSBLSUB 1671
THDISSBLSUBA 1672
THDISSDL 1672
THDISSDLA 1672
THDISSDLSUB 1673
THDISSDLSUBA 1673
THDISSS1 1673
THDISSS2 1674
THDISSS3 1674
THDISSS4 1674
THDISSS5 1675
THDISSUL 1675
THDISSULA 1675
THDISSULSUB 1675

Updated: 2009-07-22

THDISSULSUBA 1676
THDISTA 1676
THDISTAA 1676
THFERBLDIS0 1677
THFERDLDIS0 1677
THFERULDIS0 1677
THMSESTB 1678
THMSESTBSUB 1678
THNCEDROP 1678
THNCEDROPSUB 1679
THNDROP 1679
THNDROP0 1679
THNDROPSUB 1680
THNRELCONG 1680
THNRELCONGSUB 1680
THNSCAN 1681
THNSCAN_SUM 1681
THQABLDIS0 1681
THQADLDIS0 1681
THQAULDIS0 1682
THSAICTRALACC 1682
THSPV1DTMSUC 1682
THSPV3DTMSUC 1683
THSSBLDIS0 1683
THSSDLDIS0 1683
THSSULDIS0 1684
THSUDLOS 1684
THSUDLOS0 1684
THSUDLOSA 1685
THSUDLOSSUB 1685
THSUDLOSSUBA 1685
THTADIS0 1685
THTCONGS 1686
THTCONSUB 1686
THTHARDCONGS 1686
THTHARDCONSUB 1687
THTRALACC 1687
THTRALACC_SUM 1687
THTRALACC0 1688
THTRALSUB 1688
THV1CALLS 1688
THV1CALLSSUB 1689
THV1CONGSAS 1689
THV1CONGSASSUB 1689
THV1CONGSHO 1690
THV1CONGSHOSUB 1690
THV1FER 1690
THV1FERTF 1691
THV1NSCAN 1691
THV1TCONGS 1691
THV1TCONSUB 1691

© Copyright IBM Corp. 2008, 2009. All Rights Reserved.

THV1TRALACC 1692
THV1TRALACC_SUM 1692
THV1TRALSUB 1692
THV2CALLS 1693
THV2CALLSSUB 1693
THV2CONGSAS 1693
THV2CONGSASSUB 1694
THV2CONGSHO 1694
THV2CONGSHOSUB 1694
THV2NSCAN 1695
THV2TCONGS 1695
THV2TCONSUB 1695
THV2TRALACC 1696
THV2TRALSUB 1696
THV3CALLS 1696
THV3CALLSSUB 1697
THV3CM1DL 1697
THV3CM1UL 1697
THV3CM2DL 1698
THV3CM2UL 1698
THV3CM3DL 1698
THV3CM3UL 1698
THV3CM4DL 1699
THV3CM4UL 1699
THV3CONGSAS 1699
THV3CONGSASSUB 1700
THV3CONGSHO 1700
THV3CONGSHOSUB 1700
THV3FERCM1 1701
THV3FERCM2 1701
THV3FERCM3 1701
THV3FERCM4 1702
THV3NSCAN 1702
THV3TCONGS 1702
THV3TCONSUB 1702
THV3TFCM1 1703
THV3TFCM2 1703
THV3TFCM3 1703
THV3TFCM4 1704
THV3TRALACC 1704
THV3TRALSUB 1704
TIME_CELLEVENT 1705
TIMEHCSOUT 1705
TNUCHCNT 1705
TNUCHSUB 1706
TOTCLSTIME 1706
TRAFF2BTBFSCAN 1706
TRAFF2ETBFSCAN 1707
TRAFF2GTBFSCAN 1707
TRAFFDLGPRSSCAN 1707
TRAFFGPRSSCAN 1707

Updated: 2009-07-22

TRAFFULGPRSSCAN 1708
TRAFGPRS2SCAN 1708
TRAFGPRS3SCAN 1708
TRASYNCCNT 1709
TSMSDWN 1709
TSMSUP 1709
TSQ0ACCPT 1710
TSQ0ACCPTDL 1710
TSQ0AFACCPT 1710
TSQ0AFACCPTDL 1711
TSQ0AFBAD 1711
TSQ0AFBADDL 1711
TSQ0AFGOOD 1712
TSQ0AFGOODDL 1712
TSQ0AHACCPT 1712
TSQ0AHACCPTDL 1713
TSQ0AHBAD 1713
TSQ0AHBADDL 1713
TSQ0AHGOOD 1714
TSQ0AHGOODDL 1714
TSQ0AWACCPT 1714
TSQ0AWACCPTDL 1715
TSQ0AWBAD 1715
TSQ0AWBADDL 1715
TSQ0AWGOOD 1716
TSQ0AWGOODDL 1716
TSQ0BAD 1716
TSQ0BADDL 1717
TSQ0GOOD 1717
TSQ0GOODDL 1717
TSQIACCPT 1718
TSQIACCPTAF 1718
TSQIACCPTAFDL 1718
TSQIACCPTAH 1719
TSQIACCPTAHDL 1719
TSQIACCPTAW 1719
TSQIACCPTAWDL 1720
TSQIACCPTDL 1720
TSQIACCPTSUB 1720
TSQIACCPTSUBAF 1721
TSQIACCPTSUBAFDL 1721
TSQIACCPTSUBAH 1721
TSQIACCPTSUBAHDL 1722
TSQIACCPTSUBAW 1722
TSQIACCPTSUBAWDL 1722
TSQIACCPTSUBDL 1723
TSQIBAD 1723
TSQIBADAF 1723
TSQIBADAFDL 1724
TSQIBADAH 1724
TSQIBADAHDL 1724

© Copyright IBM Corp. 2008, 2009. All Rights Reserved.

TSQIBADAW 1725
TSQIBADAWDL 1725
TSQIBADDL 1725
TSQIBADSUB 1726
TSQIBADSUBAF 1726
TSQIBADSUBAFDL 1726
TSQIBADSUBAH 1727
TSQIBADSUBAHDL 1727
TSQIBADSUBAW 1727
TSQIBADSUBAWDL 1728
TSQIBADSUBDL 1728
TSQIGOOD 1728
TSQIGOODAF 1729
TSQIGOODAFDL 1729
TSQIGOODAH 1729
TSQIGOODAHDL 1730
TSQIGOODAW 1730
TSQIGOODAWDL 1730
TSQIGOODDL 1731
TSQIGOODSUB 1731
TSQIGOODSUBAF 1731
TSQIGOODSUBAFDL 1732
TSQIGOODSUBAH 1732
TSQIGOODSUBAHDL 1732
TSQIGOODSUBAW 1733
TSQIGOODSUBAWDL 1733
TSQIGOODSUBDL 1733
TWDISFERBLA 1734
TWDISFERBLSUBA 1734
TWDISFERDLA 1734
TWDISFERDLSUBA 1735
TWDISFERULA 1735
TWDISFERULSUBA 1735
TWDISQABLA 1736
TWDISQABLSUBA 1736
TWDISQADLA 1736
TWDISQADLSUBA 1736
TWDISQAULA 1737
TWDISQAULSUBA 1737
TWDISSBLA 1737
TWDISSBLSUBA 1738
TWDISSDLA 1738
TWDISSDLSUBA 1738
TWDISSULA 1739
TWDISSULSUBA 1739
TWDISTAA 1739
TWSUDLOSA 1740
TWSUDLOSSUBA 1740
ULACTBPDCH 1740
ULACTEPDCH 1740
ULACTGPDC 1741

Updated: 2009-07-22

ULACTTBFPBPDCH 1741
ULACTTBFPEPDCH 1741
ULACTTBFPGPDCH 1742
ULBGEGDATA 1742
ULBGEGPFC 1742
ULBGEGTHR 1743
ULBGGDATA 1743
ULBGGPFC 1743
ULBGGTHR 1744
ULBPDCH 1744
ULEPDCH 1744
ULGMMVOL 1744
ULGPDCH 1745
ULINTBGVOL 1745
ULMSEGDATA 1745
ULMSEGTHR 1746
ULMSGDATA 1746
ULMSGTHR 1746
ULSAICVOL 1747
ULTBFPBPDCH 1747
ULTBFPEPDCH 1747
ULTBFPGPDCH 1748
ULTHP1EGDATA 1748
ULTHP1EGPFC 1748
ULTHP1EGTHR 1749
ULTHP1GDATA 1749
ULTHP1GPFC 1749
ULTHP1GTHR 1749
ULTHP2EGDATA 1750
ULTHP2EGPFC 1750
ULTHP2EGTHR 1750
ULTHP2GDATA 1751
ULTHP2GPFC 1751
ULTHP2GTHR 1751
ULTHP3EGDATA 1752
ULTHP3EGPFC 1752
ULTHP3EGTHR 1752
ULTHP3GDATA 1753
ULTHP3GPFC 1753
ULTHP3GTHR 1753
USEDDLRBLKS 1753
USEDULRBLKS 1754
VOL10STRACC 1754
VOL120STRACC 1754
VOL160STRACC 1755
VOL20STRACC 1755
VOL30STRACC 1755
VOL40STRACC 1756
VOL60STRACC 1756
VOL80STRACC 1756
VOLULSTRACC 1757

© Copyright IBM Corp. 2008, 2009. All Rights Reserved.

WTHR10STRACC . . . 1757
WTHR120STRACC . . . 1757
WTHR160STRACC . . . 1758
WTHR20STRACC . . . 1758
WTHR30STRACC . . . 1758
WTHR40STRACC . . . 1759
WTHR60STRACC . . . 1759
WTHR80STRACC . . . 1759
Cellset Primitive Calculations . . . 1760
GRAPHmultiLineSeparator . . . 1760
MRR_RELEASE . . . 1760
NUMDAYS . . . 1760
NUMHOURS . . . 1760
Cellset Peg Counts . . . 1760
Cell_Set_Name . . . 1760
Creator . . . 1761
Day_setting . . . 1761
No_of_Cells . . . 1761
Period__1 . . . 1761
Period__2 . . . 1761
Period__3 . . . 1761
Period__4 . . . 1761
Result_Name . . . 1762
Result_Status . . . 1762
Start_Time . . . 1762
Stop_Time . . . 1762
Threshold . . . 1762
DataService_MSC Primitive Calculations . . . 1762
GRAPHmultiLineSeparator . . . 1763
NUMDAYS . . . 1763
NUMHOURS . . . 1763
DataService_MSC Peg Counts . . . 1763
NDATATOT . . . 1763
Destination Primitive Calculations . . . 1763
GRAPHmultiLineSeparator . . . 1763
INTERVALS . . . 1763
LocalName . . . 1764
NUMDAYS . . . 1764
NUMHOURS . . . 1764
VENDORTECH . . . 1764
Destination Peg Counts . . . 1764
BANS_TRART . . . 1764
MSC_RELEASE . . . 1765
NANSW_MBASTRAFTY . . . 1765
NCALLS_MBASTRAFTY . . . 1765
NCALLS_SSF . . . 1765
NCALLS_TRART . . . 1766
NCALLSDB . . . 1766
NCALLSEXTCONG . . . 1766
NCALLSINTCONG . . . 1766

NCALLSSUCCEOS 1767
NCALLSUNSUCC 1767
NECONG_MBASTRAFTY 1767
NICONG_MBASTRAFTY 1768
NSCAN_MBASTRAFTY 1768
NSUEOS_MBASTRAFTY 1768
NTRALACC_MBASTRAFTY 1769
NUNSUCC_MBASTRAFTY 1769
PERLEN 1769
TRAFLVLCNTR 1769
TRAL_MBASTRAFTY 1770
DestinationCode Primitive Calculations 1770
GRAPHmultiLineSeparator 1770
INTERVALS 1770
NUMDAYS 1770
NUMHOURS 1771
VENDORTECH 1771
DestinationCode Peg Counts 1771
MSC_RELEASE 1771
NANSW 1771
NCALLS 1771
NOUTGSCNT 1772
NTDBLO 1772
NUNSUCC 1772
PERLEN 1773
TRAL 1773
DigitalPath_MSC Primitive Calculations 1773
GRAPHmultiLineSeparator 1773
NUMDAYS 1773
NUMHOURS 1773
DigitalPath_MSC Peg Counts 1774
BFF 1774
CSLE 1774
CSLER 1774
DF 1774
ES 1774
ESR 1774
FSBE 1774
FSBER 1774
G1 1774
G1R 1774
G2 1774
G2R 1775
G3 1775
G3R 1775
G4 1775
G4R 1775
G5 1775
G5R 1775
G6 1775

© Copyright IBM Corp. 2008, 2009. All Rights Reserved.

G6R 1775
LCVE 1775
LCVER 1775
SEFE 1775
SEFER 1775
SES 1776
SESR 1776
SF 1776
SMI 1776
UAS 1776
UASB 1776
UASR 1776
UAV 1776
DigPathType_BSC Primitive Calculations 1776
GRAPHmultiLineSeparator 1776
NUMDAYS 1776
NUMHOURS 1777
DigPathType_BSC Peg Counts 1777
BLOHP 1777
BLOLP 1777
NBLOC 1777
NBLOMS 1778
NBLOSDIP 1778
NCONHP 1778
NCONLP 1779
NCONMS 1779
NCONSDIP 1779
NDIPST 1780
NPC 1780
PERLEN 1780
DigPathType_MSC Primitive Calculations 1780
GRAPHmultiLineSeparator 1780
NUMDAYS 1780
NUMHOURS 1781
DigPathType_MSC Peg Counts 1781
NBLOC 1781
NDIPST 1781
DirTrunk Primitive Calculations 1781
GRAPHmultiLineSeparator 1781
INTERVALS 1781
NANSWERSI_PC 1781
NANSWERSO_PC 1782
NCALLSI_PC 1782
NCALLSO_PC 1782
NISUPATPI_PC 1782
NISUPATPO_PC 1782
NOVERFLOWI_PC 1782
NOVERFLOWO_PC 1782
NRESTRICTI_PC 1783
NRESTRICTO_PC 1783

Updated: 2009-07-22

NSEMIPERCI_PC 1783
NSEMIPERCO_PC 1783
NTRALACCI_TRUNKROUTE_PC 1783
NTRALACCO_TRUNKROUTE_PC 1783
NUMDAYS 1783
NUMHOURS 1784
TRALI_TRUNKROUTE_PC 1784
TRALO_TRUNKROUTE_PC 1784
VENDORTECH 1784
DirTrunk Peg Counts 1784
BBLOL 1784
BLOL_TRUNKROUTE 1785
ID1_TRUNKROUTE 1785
ID2_TRUNKROUTE 1785
LASTCONGCNT 1786
MSC_RELEASE 1786
NANSWERSI 1786
NANSWERSO 1786
NBBLOCACC 1787
NBLOCACC_TRUNKROUTE 1787
NC7DSEIZ 1787
NCALLSI 1787
NCALLSO 1788
NCONGBAS 1788
NCONGTRANS 1788
NDEV_TRUNKROUTE 1789
NDSEIZ 1789
NISUPATPI 1789
NISUPATPO 1790
NOSEIZ_TRUNKROUTE 1790
NOVERFLOWI 1790
NOVERFLOWO 1791
NRESTRICTI 1791
NRESTRICTO 1791
NSCAN_TRUNKROUTE 1792
NSEMIPERCI 1792
NSEMIPERCO 1792
NTRALACCI_TRUNKROUTE 1792
NTRALACCO_TRUNKROUTE 1793
PERLEN 1793
RESTRDEVCNT 1793
THROUGHRTECNT 1793
TRALI_TRUNKROUTE 1794
TRALO_TRUNKROUTE 1794
TRK_TYPE 1794
Distrib_Group_Switch Primitive Calculations 1795
GRAPHmultiLineSeparator 1795
LocalName 1795
NUMDAYS 1795
NUMHOURS 1795

© Copyright IBM Corp. 2008, 2009. All Rights Reserved.

Distrib_Group_Switch Peg Counts 1795
ACCPLA 1795
ACCPLB 1796
ACCUNIT 1796
BLKPLA 1796
BLKPLB 1797
BLKUNIT 1797
NSCAN 1797
NUNIT 1798
PERLEN 1798
DTISC Primitive Calculations 1798
GRAPHmultiLineSeparator 1798
INTERVALS 1798
NUMDAYS 1798
NUMHOURS 1799
VENDORTECH 1799
DTISC Peg Counts 1799
MSC_RELEASE 1799
NDTICMMFLT 1799
NDTICMMTOT 1799
NDTICNGTOT 1800
NDTIDDDCTOT 1800
NDTIESTFLT 1800
NDTIESTTOT 1801
NDTIICMCANTOT 1801
NDTIICMCPLFLT 1801
NDTIICMCPLTOT 1802
NDTIICMFLT 1802
NDTIICMTOT 1802
NDTIPREPFLT 1803
NDTIPREPTOT 1803
NDTIRELTOT 1803
NIWUANMFLT 1804
NIWUANMTOT 1804
NIWUCMMFLT 1804
NIWUCMMTOT 1805
NIWUCNGTOT 1805
NIWUICMCANTOT 1805
NIWUICMCPLFLT 1806
NIWUICMCPLTOT 1806
NIWUICMFLT 1806
NIWUICMTOT 1806
NIWUIWRFLT 1807
NIWUIWRTOT 1807
NIWURELTOT 1807
PERLEN 1808
ECPool Primitive Calculations 1808
GRAPHmultiLineSeparator 1808
INTERVALS 1808
NUMDAYS 1808

Updated: 2009-07-22

NUMHOURS 1808
VENDORTECH 1808
ECPool Peg Counts 1809
ABLOCCNT 1809
BLOCCNT 1809
CALLCNT 1809
CONGCNT 1810
MBLOCCNT 1810
MSC_RELEASE 1810
NUDEVCNT 1810
OBLOCCNT 1811
PERLEN 1811
POOL_ID 1811
TOTDEVCNT 1811
TRALCNT 1812
EM Primitive Calculations 1812
GRAPHmultiLineSeparator 1812
INTERVALS 1812
LocalName 1812
NUMDAYS 1812
NUMHOURS 1813
VENDORTECH 1813
EM Peg Counts 1813
BSS_RELEASE 1813
ID1_EM 1813
PERLEN 1813
RPPLOAD 1813
EOSCode Primitive Calculations 1814
GRAPHmultiLineSeparator 1814
INTERVALS 1814
LocalName 1814
NUMDAYS 1814
NUMHOURS 1814
VENDORTECH 1815
EOSCode Peg Counts 1815
MSC_RELEASE 1815
NEVERY 1815
NLAST 1815
PERLEN 1816
Global_Titl_Trans_Typ Primitive Calculations 1816
GRAPHmultiLineSeparator 1816
NUMDAYS 1816
NUMHOURS 1816
Global_Titl_Trans_Typ Peg Counts 1816
GTTPERFD 1816
GTTUN0NS 1817
GTTUN1NT 1817
PERLEN 1817
Higher_Order_Path Primitive Calculations 1817
GRAPHmultiLineSeparator 1817

© Copyright IBM Corp. 2008, 2009. All Rights Reserved.

LocalName 1817
NUMDAYS 1818
NUMHOURS 1818
Higher_Order_Path Peg Counts 1818
HPFBBE 1818
HPFES 1818
HPFSES 1819
HPFUAS 1819
HPFUAV 1819
HPNBBE 1820
HPNES 1820
HPNSES 1820
HPNUAS 1820
HPNUAV 1821
PERLEN 1821
SMI 1821
HLRSubs Primitive Calculations 1822
GRAPHmultiLineSeparator 1822
INTERVALS 1822
LocalName 1822
NUMDAYS 1822
NUMHOURS 1822
VENDORTECH 1822
HLRSubs Peg Counts 1823
MSC_RELEASE 1823
NHLRMSST 1823
NHLRREGAST 1823
PERLEN 1823
ISDNESG Primitive Calculations 1823
GRAPHmultiLineSeparator 1824
INTERVALS 1824
LocalName 1824
NUMDAYS 1824
NUMHOURS 1824
VENDORTECH 1824
ISDNESG Peg Counts 1824
BSUBCNT 1825
MSC_RELEASE 1825
NSCAN 1825
OSEIZCNT 1825
OTRALCNT 1826
PERLEN 1826
SUBCNT 1826
TANSCNT 1826
TBUSYCNT 1827
TCALLCNT 1827
TNUMLCNT 1827
TRSERCNT 1827
TSEIZCNT 1828
TTRALCNT 1828

Updated: 2009-07-22

TUCACNT 1828
TUSBUCNT 1829
LA Primitive Calculations 1829
GRAPHmultiLineSeparator 1829
INTERVALS 1829
NUMDAYS 1829
NUMHOURS 1830
PL_SUCC% 1830
PL_TOT_1 1830
VENDORTECH 1830
LA Peg Counts 1830
MSC_RELEASE 1830
NLAL2IOTOT 1830
NLAL2NOSUCC 1831
NLAL2OISUCC 1831
NLAL2ONTOT 1831
NLALIOSUCC 1832
NLALIOTOT 1832
NLALNNSUCC 1832
NLALNNTOT 1833
NLALNOSUCC 1833
NLALNOTOT 1833
NLALOCPRRFLT 1834
NLALOCSSRFLT 1834
NLALOCSUCC 1834
NLALOCTOT 1835
NLALPESUCC 1835
NLALPETOT 1835
NLAPAG1LOTOT 1835
NLAPAG1RESUCC 1836
NLAPAG2LOTOT 1836
NLAPAG2RESUCC 1836
NLAPAGERR 1837
PERLEN 1837
LAPD Primitive Calculations 1837
GRAPHmultiLineSeparator 1837
INTERVALS 1837
LocalName 1837
NUMDAYS 1838
NUMHOURS 1838
VENDORTECH 1838
LAPD Peg Counts 1838
BSS_RELEASE 1838
CBADFRAME 1838
CLINKFAIL 1839
COVERLOAD 1839
CPROCOLERR 1839
CRECIFRAME 1839
CRETRANSM 1840
CTRIFRAME 1840

© Copyright IBM Corp. 2008, 2009. All Rights Reserved.

PERLEN 1840
LATA Primitive Calculations 1840
GRAPHmultiLineSeparator 1841
NUMDAYS 1841
NUMHOURS 1841
LATA Peg Counts 1841
NLTPG1SUCC 1841
NLTPG1TOT 1841
NLTPG2SUCC 1841
NLTPG2TOT 1841
NLTWPGSUCC 1841
NLTWPGTOT 1841
LossRoute Primitive Calculations 1842
GRAPHmultiLineSeparator 1842
INTERVALS 1842
NUMDAYS 1842
NUMHOURS 1842
VENDORTECH 1842
LossRoute Peg Counts 1842
ABLOL_LOSSROUTE 1842
BLOL_LOSSROUTE 1843
ID1_LOSSROUTE 1843
MBLOL_LOSSROUTE 1843
MSC_RELEASE 1844
NABLOCACC_LOSSROUTE 1844
NANSW_LOSSROUTE 1844
NBLOCACC_LOSSROUTE 1844
NCALLS 1845
NDEV_LOSSROUTE 1845
NMBLOCACC_LOSSROUTE 1845
NOBLOCACC_LOSSROUTE 1846
NOVERFLOW_LOSSROUTE 1846
NSCAN_LOSSROUTE 1846
NTRALACC_LOSSROUTE 1847
OBLOL_LOSSROUTE 1847
PERLEN 1847
TRAL_LOSSROUTE 1847
Lower_Order_Path Primitive Calculations 1848
GRAPHmultiLineSeparator 1848
LocalName 1848
NUMDAYS 1848
NUMHOURS 1848
Lower_Order_Path Peg Counts 1848
LPFBBE 1848
LPFES 1849
LPFSES 1849
LPFUAS 1849
LPFUAV 1850
LPNBBE 1850
LPNES 1850

Updated: 2009-07-22

LPNSES 1851
LPNUAS 1851
LPNUAV 1851
PERLEN 1851
SMI 1852
MapOp Primitive Calculations 1852
GRAPHmultiLineSeparator 1852
INTERVALS 1852
NUMDAYS 1852
NUMHOURS 1852
VENDORTECH 1853
MapOp Peg Counts 1853
MSC_RELEASE 1853
NMAP1FLT 1853
NMAP1SUCC 1853
NMAP1TOT 1854
NMAP1TOTST 1854
NMAP2FLT 1854
NMAP2SUCC 1855
NMAP2TOT 1855
NMAP3FLT 1855
NMAP3SUCC 1856
NMAP3TOT 1856
PERLEN 1856
MSC Available Data Fields 1856
C7TMFILE_MSC_AvailableDataPct 1856
STS_MSC_AvailableDataPct 1856
MSC Primitive Calculations 1857
AnsSwitchCallsFiltered 1857
CP_LOAD% 1857
FailedIncominginterMSChandoverattempts 1857
FailedInterCelIntraMSCHandovers 1857
FailedOutgoingInterMSCHandoverAttempts 1857
FailSwitchCallsFiltered 1857
GRAPHmultiLineSeparator 1858
IncominterMSChandoverattempts 1858
IntBSCIncHOAtts 1858
IntBSCIncHOFail% 1858
IntBSCIncHOFails 1858
INTERVALS 1858
INTERVALS_TRAR 1858
INTERVALS_TRART 1859
IntMSCIncHOAtts 1859
IntMSCIncHOFail% 1859
IntMSCIncHOFails 1859
IntMSCOutHOAtts 1859
IntMSCOutHOFail% 1859
IntMSCOutHOFails 1859
LU_IMSI_AT 1860
LU_IMSI_DE 1860

© Copyright IBM Corp. 2008, 2009. All Rights Reserved.

LU_NORM 1860
LU_NR 1860
LU_NR_SUC 1860
LU_PERIOD 1860
LU_R 1861
LU_R_SUC 1861
LU_SUC 1861
LU_TOT 1861
MobileTerminatingFailedCalls 1861
MobilOriginatingFailedCalls 1861
MocMtcSetupSuccessRate 1861
MocMtcSetupSuccessRate_UMTS 1862
MocMtcSetupSuccessRateUMTS 1862
MocSetupRatio 1862
MocSetupRatio_UMTS 1862
MocSetupRatioUMTS 1862
MocSetupSuccessRate 1862
MocSetupSuccessRate_UMTS 1862
MocSetupSuccessRateUMTS 1863
MtcSetupRatio 1863
MtcSetupRatio_UMTS 1863
MtcSetupRatioUMTS 1863
MtcSetupSuccessRate 1863
MtcSetupSuccessRate_UMTS 1863
MtcSetupSuccessRateUMTS 1863
NANSWERS_BW 1864
NCALLS_BW 1864
NHLRMSST_AVG 1864
NHLRMSST_MAX 1864
NISUPATP_BW 1864
NOVERFLOW_BW 1864
NRESTRICT_BW 1864
NSEMIPERC_BW 1865
NTRALACC_TRUNKROUTE_BW 1865
NUMDAYS 1865
NUMHOURS 1865
OutgoingInterMSCHandoverAttempts 1865
PercAnsSwitchCallsFiltered 1865
PercFailCallsFiltered 1865
PercFailSwitchCallsFiltered 1866
SMS_MO_SUC 1866
SMS_MOSENT 1866
SMS_MT_SUC 1866
SMS_MTSENT 1866
SMS_Successful 1866
SRNCDroppedCallRate 1867
SRNCRelocationSuccessRate 1867
SRNCRelocSucSigChanRate 1867
SRNCSwitchBackRate 1867
SuccessfulInterCelIntraMSCHandovers 1867
SwitchCallsFiltered 1867

Updated: 2009-07-22

SwitchedAttmptFiltered 1867
SwitchTraffFiltered 1868
TotalGlobalPages 1868
TotalInterSwitchTraffic 1868
TotalLADirectedPages 1868
TotalPOITraffic 1868
TotalSwitchedTraffic 1868
TRAL_TRUNKROUTE_BW 1868
VENDORTECH 1869
MSC Peg Counts 1869
ABLOL_MSC 1869
ACCBLKCNTR 1869
ACCLOAD 1869
ACCTRAFCNTR 1870
BLOLCLM 1870
BLOLEMUX 1870
BLOLEMUXA 1871
BLOLEMUXB 1871
BLOLSPM 1871
BLOLSPMA 1872
BLOLSPMB 1872
BLOLTSM 1872
BLOLTSMA 1873
BLOLTSMB 1873
CALLATT 1873
CALLCNG 1873
CALLCNTI 1874
CALLNPPI 1874
CALLTRF 1874
CDIALABORTSSF_SESSSF 1875
CDIALABORTSSF_SHAM 1875
CDIALATTFAIL_SESSSF 1875
CDIALATTFAIL_SHAM 1876
CDIALINITATT_SESSSF 1876
CDIALINITATT_SHAM 1876
CDIALINITCONG_SESSSF 1876
CDIALINITCONG_SHAM 1877
CDIALINPROG_SESSSF 1877
CDIALINPROG_SHAM 1877
CDIALPROCESSED_SESSSF 1878
CDIALPROCESSED_SHAM 1878
CDIALREJTCAP_SESSSF 1878
CDIALREJTCAP_SHAM 1879
CDIALREMABORT_SESSSF 1879
CDIALREMABORT_SHAM 1879
CDIALSCFERRREJ_SESSSF 1880
CDIALSCFERRREJ_SHAM 1880
CDIALTIMEOUT 1880
CERRREJSEND_SESSSF 1880
CERRREJSEND_SHAM 1881
CGREQ 1881

© Copyright IBM Corp. 2008, 2009. All Rights Reserved.

CHASMSSUCC 1881
CHASMSTOT 1882
CLREQ 1882
COMPCLI 1882
COMPCLO 1883
CONNSECT 1883
CONNSECT_SS7SCCPUSE 1883
CREFREC 1884
CREFSENT 1884
CRREC 1884
CRSENT 1885
CSENDREQREJ_SESSSF 1885
CSENDREQREJ_SHAM 1885
CTMACTMSD 1886
CTMAMSSUP 1886
CTMANCTMSD 1886
CTMIUCTMSD 1887
CTMIUMSSUP 1887
CTMIUNCTMSD 1887
DIAATT 1888
DIACNG 1888
DIATRF 1888
DMSU 1889
DSIF 1889
ERRREC 1889
ERRSENT 1889
ETCATT 1890
ETCCNG 1890
ETCTRF 1890
GINVOKED 1891
HNDSYNER 1891
IMSU 1891
ISIF 1892
LUDTREC 1892
LUDTSENT 1892
LUDTSREC 1893
LUDTSSENT 1893
MSC_RELEASE 1893
MSGHAND 1893
MSGPOL 1894
MSGPOLREJ 1894
MSGRCL0 1894
MSGRCL1 1895
MSGRQGT 1895
MSGSCL0 1895
MSGSCL1 1895
MSINVDPC 1896
MSINVSIO 1896
MTNSEPPCALL 1896
MTNSEPPFREL 1897
NACCBLOT 1897

Updated: 2009-07-22

NACTINDIC 1897
NALERT 1898
NAUTDISCLDC 1898
NAUTFTCSUCC 1898
NAUTFTCTOT 1899
NAUTMACFAIL 1899
NAUTPPREJ 1899
NAUTPPREP 1899
NAUTPPREQ 1900
NAUTREAFLT 1900
NAUTREATOT 1900
NAUTREQSUCC 1901
NAUTREQTOT 1901
NAUTRESYNCH 1901
NAUTSREERR 1902
NAUTTMSIERR 1902
NAUTTMSISUCC 1902
NAUTTMSITOT 1903
NAUTUSETOT 1903
NBLOCLMACC 1903
NBLOEMUXAACC 1903
NBLOEMUXACC 1904
NBLOEMUXBACC 1904
NBLOL 1904
NBLOSPMAACC 1905
NBLOSPMACC 1905
NBLOSPMBACC 1905
NBLOTSMAACC 1906
NBLOTSMACC 1906
NBLOTSMBACC 1906
NCACOLDG 1907
NCANOSUBD 1907
NCAPREJCNT 1907
NCAPREQCNT 1907
NCELHUNNSUCC 1908
NCELHUNNTOT 1908
NCELHUNSUCC 1908
NCELHUNTOT 1909
NCHAFRMSUCC 1909
NCHAFRMTOT 1909
NCHATOMSUCC 1910
NCHATOMTOT 1910
NCIPATTTOT 1910
NCIPHREJ 1911
NCIPHREQ 1911
NCIPSETSUCC 1911
NCLM 1911
NCPABLOT 1912
NCPMBLOT 1912
NCTDCANCLOCDISC 1912
NCTDDISC 1913

© Copyright IBM Corp. 2008, 2009. All Rights Reserved.

NDETGPRS 1913
NDISCCLINKMGWT 1913
NDRPOVRLD 1914
NDTAP1TOT 1914
NDTAPAGPS 1914
NDTAPEOTD 1915
NDTAPEXTOT 1915
NDTAPMSTOT 1915
NDTAPSTOT 1915
NEMUX 1916
NEQIDBLKTOT 1916
NEQIDEIRTOT 1916
NEQIDGRYTOT 1917
NEQIDMSSUCC 1917
NEQIDTOT 1917
NEQIDUNKTOT 1918
NEQIDWHITOT 1918
NERPROT 1918
NERRCV 1919
NERRUNEXD 1919
NERSUNEXD 1919
NFENSUP 1919
NFORLAPT 1920
NFORLAPZ 1920
NFORLMAN 1920
NFTDIEX 1921
NFTDMHI 1921
NFTDMLO 1921
NFTDNPRIO 1922
NFTDORG 1922
NFTDPRIO 1922
NFTDTCAP 1923
NGUHBSCRNCSUCC 1923
NGUHBSCRNCTOT 1923
NGUHNDATTSUCC 1924
NGUHNDCMDTOT 1924
NGUHNDHRQDTOT 1924
NGUHNDRELRR 1925
NGUHNDSDSUCC 1925
NGUHNDSDTOT 1925
NGUHNDSHTSUCC 1925
NGUHNDSHTTOT 1926
NGURELCGSSUCC 1926
NGURELDGSSUCC 1926
NGURELREQSUCC 1927
NGURELREQTOT 1927
NHNDATTSUCC 1927
NHNDBSSSUCC 1928
NHNDBSSTOT 1928
NHNDCGSSUCC 1928
NHNDCMDTOT 1929

Updated: 2009-07-22

NHNDDGSSUCC 1929
NHNDEBSSUCC 1929
NHNDEBSTOT 1929
NHNDESHSUCC 1930
NHNDESHTOT 1930
NHNDESTSUCC 1930
NHNDESTTOT 1931
NHNDIBSSUCC 1931
NHNDRELERR 1931
NHNDREQSUCC 1932
NHNDREQTOT 1932
NHNDRQDTOT 1932
NHNDSDHSUCC 1933
NHNDSDHTOT 1933
NHNDSHTSUCC 1933
NHNDSHTTOT 1934
NHNDTGSSUCC 1934
NHWFAULTS 1934
NINC 1934
NINCASSG 1935
NINCTERM 1935
NIRNFRMSUCC 1935
NIRNFRMTOT 1936
NIRNTOSUCC 1936
NIRNTOTOT 1936
NL3CCONF 1937
NL3CPROC 1937
NLDC 1937
NLIM2OLDSUCC 1938
NLNOLDSUCC 1938
NLNOLDTOT 1938
NLNPQFAIL 1939
NLNPQPORT 1939
NLNPQTOT 1939
NLOCATT2TOT 1939
NLOCATTTOT 1940
NLOCCONGSUCC 1940
NLOCDET2TOT 1940
NLOCDETTOT 1941
NLOCGPRSSUCC 1941
NLOCGPRSTOT 1941
NLOCIDTTOT 1942
NLOCIMS2ERR 1942
NLOCIMSERR 1942
NLOCNRG2SUCC 1943
NLOCNRG2TOT 1943
NLOCNRGSUCC 1943
NLOCNRGTOT 1944
NLOCNRRTOT 1944
NLOCOLD2SUCC 1944
NLOCOLD2TOT 1945

© Copyright IBM Corp. 2008, 2009. All Rights Reserved.

NLOCOLDSUCC 1945
NLOCOLDTOT 1945
NLOCPERTOT 1946
NLOCPUNEWCON 1946
NLOCPUOLDCON 1946
NLOCPUTOTNEW 1947
NLOCREGSERR 1947
NLOCUPDSUCC 1947
NLOLDIMSUCC 1948
NLOSTCL 1948
NLOSTRE 1948
NLPERSUCC 1949
NLRGA 1949
NLRGM 1949
NLTMISTOT 1949
NMANDISCLDC 1950
NMAPVERR 1950
NMAUABLOT 1950
NMAUF 1951
NMAUMBLOT 1951
NMMGSMSUCC 1951
NMMGSMTOT 1952
NMMUMTSSUCC 1952
NMMUMTSTOT 1952
NMMWPS 1953
NMSCLOCACQSUCC 1953
NMSCLOCACQTOT 1953
NMSCP3LOCTOT 1953
NMSCP4LOCSUCC 1954
NMSCP5LOCEOTD 1954
NMSCP6LOCAGPS 1954
NMSCP7LOCTIMADV 1955
NMSCP8LOCUTDOA 1955
NMSFRMSCCI 1955
NMSFRMTOTI 1956
NMSINFOREQ 1956
NMSINFORESP 1956
NMSP6LOCAGPS 1957
NMSTOMSCCO 1957
NMSTOMTOTO 1957
NMSUNREACHGPRS 1958
NNOCKT 1958
NNOPRTY 1958
NNOREC 1959
NOCOMPI 1959
NOCOMPO 1959
NODBCCTOT 1960
NODBCIPTOT 1960
NODBCP1TOT 1960
NODBCP2TOT 1960
NODBSMTOT 1961

Updated: 2009-07-22

NOFFIEX 1961
NOFFMHI 1961
NOFFMLO 1962
NOFFNPRIO_MSC_LOAS 1962
NOFFORG 1962
NOFFPRIO_MSC_LOAS 1963
NOFFTCAP 1963
NORISMSUCC 1963
NORISMTOT 1964
NOUTGO 1964
NOUTIXC 1964
NOUTIXNC 1965
NPAG1GLTOT 1965
NPAG1GLUTOT 1965
NPAG1GPRSSUCC 1966
NPAG1GPRSTOT 1966
NPAG1LOTOT 1966
NPAG1LOUTOT 1967
NPAG1RESUCC 1967
NPAG1REUSUCC 1967
NPAG2GLTOT 1968
NPAG2GLUTOT 1968
NPAG2GPRSSUCC 1968
NPAG2GPRSTOT 1968
NPAG2LOTOT 1969
NPAG2LOUTOT 1969
NPAG2RESUCC 1969
NPAG2REUSUCC 1970
NPAGAREIU 1970
NPAGERR 1970
NPAGGPRSFAIL 1971
NPAGIUREA 1971
NPAGSMSRES 1971
NPAGSMSTOT 1972
NPAGUERR 1972
NPBITF 1972
NPCPF 1973
NPERMF 1973
NQUERR 1973
NQUREQSV 1974
NREGNOTRSUCC 1974
NRELA 1974
NRELATTSUCC 1974
NRELCGSSUCC 1975
NRELCMDTOT 1975
NRELDGSSUCC 1975
NRELM 1976
NRELRELERR 1976
NRELREQSUCC 1976
NRELREQTOT 1977
NRELRNCSUCC 1977

© Copyright IBM Corp. 2008, 2009. All Rights Reserved.

NRELRNCTOT 1977
NRELRQDTOT 1978
NRELSDHSUCC 1978
NRELSDHTOT 1978
NREQTERM 1978
NRESETRECEIVED 1979
NRESETSENT 1979
NRNTLRCTOT 1979
NRNTLRDRTOT 1980
NRNTLRDSUCC 1980
NRNTLRSUCC 1980
NRP 1981
NRSITAATOT 1981
NRSITARTOT 1981
NRSOCLOERR 1982
NRSOCLOTOT 1982
NRSOCTATOT 1982
NRSPNRCV 1983
NRSPROUT 1983
NRSTCLOERR 1983
NRSTCLOTOT 1984
NRSTCTATOT 1984
NSCAN 1984
NSCAN_GRPSWITCH 1984
NSECFRRNSCC 1985
NSECTORNTOT 1985
NSEPINCTER 1985
NSEPISUC 1986
NSEPIUNS 1986
NSEPOUT 1986
NSEPPCALL 1986
NSEPPFREL 1987
NSEPPTOUT 1987
NSEPQCALL 1987
NSEPQFREL 1988
NSEPQOVFL 1988
NSEPQTOUT 1988
NSEPSUCSIG 1988
NSEPUNSUCC 1989
NSMLA 1989
NSMLM 1989
NSMSCAOSUCC 1990
NSMSCDOTOT 1990
NSMSCMRSUCC 1990
NSMSCMTOT 1991
NSMSDBRS 1991
NSMSFAIL 1991
NSMSINV 1992
NSMSMARTOT 1992
NSMSNRFSMTOT 1992
NSMSNRFSMTOT3 1993

Updated: 2009-07-22

NSMSRAOSUCC 1993
NSMSRDOTOT 1993
NSMSRDTOT2 1994
NSMSSMRLTOT 1994
NSMSSRSUCC 1994
NSPFAXSW1SUCC 1995
NSPFAXSW1TOT 1995
NSPM 1995
NSUCCLIWFBYPASS 1995
NTATTMPT 1996
NTBITF 1996
NTBRSMS 1996
NTBRSMSFAIL 1997
NTCISTALG 1997
NTCISTALM 1997
NTCISTCOM 1998
NTCPF 1998
NTEMPF 1998
NTERM 1998
NTERSMSUCC 1999
NTERSMTOT 1999
NTOTLIWFBYPASS 1999
NTQABAND 2000
NTQOVFL 2000
NTQQEUD 2000
NTQTOUT 2001
NTRMER 2001
NTRMERAB 2001
NTRMERSSP 2002
NTRMNRCV 2002
NTRMRCV 2002
NTSM 2003
NUGHNDATTSUCC 2003
NUGHNDCGSSUCC 2003
NUGHNDCMDTOT 2004
NUGHNDDGSSUCC 2004
NUGHNDRELERR 2004
NUGHNDRELREQSUCC 2004
NUGHNDRELREQTOT 2005
NUGHNDRRQDTOT 2005
NUGHNDSDSUCC 2005
NUGHNDSDTOT 2006
NUGHNDSTSUCC 2006
NUGHNDSTTOT 2006
NUGHRNCBSCSUCC 2007
NUGHRNCBSCTOT 2007
NVACANN 2007
OCTRETRN 2008
OMMSU 2008
OMSIF 2008
ORGETSTOT 2008

© Copyright IBM Corp. 2008, 2009. All Rights Reserved.

ORWPSSUCC 2009
ORWPSTOT 2009
OUMSU 2009
OUSIF 2009
P95FPHGT 2010
P95FPHNT 2010
PAIRABLOL 2010
PAIRABLOL1 2011
PAIRMBLOL 2011
PAIRMBLOL1 2011
PERLEN 2012
PERLEN_TRAR 2012
PERLEN_TRART 2012
RFNETCONG 2012
RFNETFAIL 2012
RFSPADDR 2012
RFSSNFAIL 2013
RFSUADDR 2013
RFUNEQUIP 2013
RFUNQUAL 2014
SAMPPHGT 2014
SAMPPHNT 2014
SCANCNTBLO 2015
SCANCNTTRAFF 2015
SFREQ 2015
SIZEDS 2016
SIZEPS 2016
SIZERS 2016
SRFATT 2017
SRFCNG 2017
SRFTRF 2017
SYERROR 2018
TIMEETC 2018
TIMEPHGT 2018
TIMEPHNT 2018
TIMESRF 2019
TMMSU 2019
TMSIF 2019
TNSEPSUCC 2020
TNSEPTOT 2020
TOTSCBUF1 2020
TOTSCBUF2 2020
TOTSCBUF3 2021
TOTSCBUF4 2021
TOTTCBUFF 2021
TOTTCDIA 2022
TOTTCOP 2022
TUMSU 2022
TUSIF 2023
UDTREC 2023
UDTSENT 2023

Updated: 2009-07-22

UDTSREC 2024
UDTSSENT 2024
WASSIGND 2024
WINVOKED 2024
XUDTREC 2025
XUDTSENT 2025
XUDTSREC 2025
XUDTSSENT 2026
MSC_SS7Dest Primitive Calculations 2026
GRAPHmultiLineSeparator 2026
INTERVALS 2026
LocalName 2026
NUMDAYS 2027
NUMHOURS 2027
VENDORTECH 2027
MSC_SS7Dest Peg Counts 2027
MSC_RELEASE 2027
MSGSND 2027
PERLEN 2027
SYS7IND_MSC_C7SCSIGP 2028
MSC_SS7HSLPrmGrp Primitive Calculations 2028
GRAPHmultiLineSeparator 2028
LocalName 2028
NUMDAYS 2028
NUMHOURS 2028
VENDORTECH 2029
MSC_SS7HSLPrmGrp Peg Counts 2029
AERMM 2029
AERMN 2029
AERMTIE 2029
AERMTIN 2030
ALPHA 2030
CNGABTH1 2030
CNGABTH2 2031
CNGABTH3 2031
CNGDITH1 2031
CNGDITH2 2032
CNGDITH3 2032
CNGONTH1 2032
CNGONTH2 2033
CNGONTH3 2033
ERRCORR 2033
HLR_RELEASE 2034
LT1ALNRD 2034
LT1UNACK 2034
LT2NOALN 2034
LT3ALIND 2035
LT4EMGPV 2035
LT4NMLPV 2035
LT5DSIB 2036

© Copyright IBM Corp. 2008, 2009. All Rights Reserved.

LT6RMCNG 2036
LT7XDLAK 2036
LTBLCKSZ 2037
LTFORPRV 2037
LTKPALIV 2037
LTMAXPDU 2038
LTMXIDLE 2038
LTNOCRED 2038
LTPRVPDU 2039
LTPULLRT 2039
LTSCCFAL 2039
LTSCCOPR 2039
LTSETALG 2040
LTSTATLS 2040
LTTAUERR 2040
MONEREVT 2041
MONINTER 2041
NMXSDPDU 2041
NMXSTPDU 2042
NMXUNACK 2042
NT17REAL 2042
PCRN2 2043
PDUSENTP 2043
PERLEN 2043
SCCOPPDU 2043
SUERMD 2044
SUERMT 2044
TAS 2044
THRSRUNQ 2045
TTS 2045
MSC_SS7Link Primitive Calculations 2045
C7_SLTL_DiffRX 2045
C7_SLTL_DiffTX 2046
C7_SLTL_RX 2046
C7_SLTL_TX 2046
DataRate 2046
GRAPHmultiLineSeparator 2046
InterconnectTraffReciev 2046
InterconnectTraffTrans 2047
INTERVALS 2047
INTERVALS_C7TM 2047
Link_Usage 2047
MSUS 2047
NMSURE 2047
NMSUTR 2047
NumberMSUsReceived 2048
NumberMSUsTransmitted 2048
NumberSIFAndSIOOctetsReceived 2048
NumberSIFAndSIOOctetsTransmitted 2048
NumberSLFailures 2048
NUMDAYS 2048

NUMHOURS 2048
PercentageLinkAvailability 2049
PercentageLocalBusy 2049
VENDORTECH 2049
MSC_SS7Link Peg Counts 2049
ACHGOVRS 2049
ACHGOVRS_SS7HSLMT2 2049
ALGNFLRS_SS7HSLMT2 2050
ASLDUR 2050
CDISCONX_SS7HSLMT3 2050
CGSTEVL_SS7HSLMT1 2051
CGSTLEVL 2051
CGSTSTAT 2051
CGSTSTAT_SS7HSLMT1 2052
CHOVERS 2052
CLUSTERCODE_MSC_SS7SLMT1 2052
CLUSTERCODE_MSC_SS7SLMT2 2053
CLUSTERCODE_MSC_SS7SLTRAFF 2053
CNRECONX_SS7HSLMT3 2053
CNSUMERS_SS7HSLMT3 2053
CONCNT1 2054
CONCNT2 2054
CONCNT3 2054
CONDUR1 2055
CONDUR2 2055
CONDUR3 2055
CONSTOP1 2056
CONSTOP2 2056
CONSTOP3 2056
DCLRFAIL 2057
DCLRFAIL_SS7HSLMT1 2057
DCONG 2057
DDCFLABN 2057
DDCFLHWP 2058
DDCFLHWP_SS7HSLMT2 2058
DDCFLXDA 2058
DDCFLXDA_SS7HSLMT2 2059
DDCFLXDC 2059
DDCFLXDC_SS7HSLMT2 2059
DDCFLXER 2060
DDCFLXER_SS7HSLMT2 2060
DISMES1 2060
DISMES2 2061
DISMES3 2061
DISMSU1 2061
DISMSU2 2062
DISMSU3 2062
DRBSYDCL 2062
DRBSYDCL_SS7HSLMT1 2062
DRBSYRCD 2063
DRDCLFLR 2063

© Copyright IBM Corp. 2008, 2009. All Rights Reserved.

DRDCLFLR_SS7HSLMT2 2063
DRFEPRO 2064
DRFEPRO_SS7HSLMT1 2064
DRLCLPRO 2064
DRLCLPRO_SS7HSLMT2 2065
DRLKFAIL 2065
DRLKINHB 2065
DRLKINHB_SS7HSLMT2 2066
DRNOCRED_SS7HSLMT3 2066
DUNAV 2066
ECCNGLV1 2066
ECCNGLV1_SS7HSLMT1 2067
ECCNGLV2 2067
ECCNGLV2_SS7HSLMT1 2067
ECCNGLV3 2068
ECCNGLV3_SS7HSLMT1 2068
ERRSEC 2068
ERRSEC_SS7HSLTRAF 2069
FARMGINH 2069
FARMGINH_SS7HSLMT2 2069
HDRDSCDS_SS7HSLMT3 2070
HECDSCDS_SS7HSLMT3 2070
ICUICELS_SS7HSLTRAF 2070
ILS_MSC_SS7SLMT1 2070
ILS_MSC_SS7SLTRAFF 2071
INCCELLS_SS7HSLTRAF 2071
INITFLRS_SS7HSLMT3 2071
INVLPDUS_SS7HSLMT3 2072
LACKCRED_SS7HSLMT3 2072
LBUSDUR 2072
LINHNO 2073
LKMTCST 2073
LKMTCST_SS7HSLMT1 2073
LOCINHDUR 2074
LOFMSU1 2074
LOFMSU2 2074
LOFMSU3 2075
LS10SCAN 2075
LS10SCAN_SS7HSLMT2 2075
LSID 2075
MCHGOVRS 2076
MCHGOVRS_SS7HSLMT2 2076
MEMBERCODE_MSC_SS7SLMT1 2076
MEMBERCODE_MSC_SS7SLMT2 2077
MEMBERCODE_MSC_SS7SLTRAFF 2077
MGMTINHB 2077
MGMTINHB_SS7HSLMT1 2078
MOCTRGTT_SS7HSLTRAF 2078
MSC_RELEASE 2078
MSGDISC0_SS7HSLMT1 2078
MSGDISC1_SS7HSLMT1 2079

Updated: 2009-07-22

MSGDISC2_SS7HSLMT1 2079
MSGDISC3_SS7HSLMT1 2079
MSGDISCH_SS7HSLMT1 2080
MSGSRCVD_SS7HSLTRAF 2080
MSGSRGTT_SS7HSLTRAF 2080
MSGSTRAN_SS7HSLTRAF 2080
MSUDISC0 2081
MSUDISC1 2081
MSUDISC2 2081
MSUDISC3 2082
MSURCERR 2082
MSURECD_MSC_C7Link 2082
MSURETRN_MSC_C7Link 2083
MSUSRGTT 2083
MSUTRAN_MSC_C7Link 2083
MTCEUSG 2084
MTCEUSG_SS7HSLMT1 2084
N10SCAN_MSC_C7Link 2084
N10SCAN_SS7HSLMT1 2084
NDCFLABN 2085
NDCFLHWP 2085
NDCFLHWP_SS7HSLMT2 2085
NDCFLXDA 2086
NDCFLXDA_SS7HSLMT2 2086
NDCFLXDC 2086
NDCFLXDC_SS7HSLMT2 2087
NDCFLXER 2087
NDCFLXER_SS7HSLMT2 2087
NDISC 2088
NEARMGIH 2088
NEARMGIH_SS7HSLMT2 2088
NEGACKS 2088
NLOSS 2089
NMDCLFLR 2089
NMDCLFLR_SS7HSLMT2 2089
NMSURE_ASC_CCITT7 2090
NMSURE_C7SL1 2090
NMSUTR_ASC_CCITT7 2090
NMSUTR_C7SL1 2091
NNAREC 2091
NOCTRE 2091
NOCTRTR 2092
NOCTTR 2092
NORTRO 2092
NSIFSRE 2092
NSIFTR 2093
NSLALPRFL 2093
NSLCO 2093
NSLFA 2094
NSUERR 2094
OCDANMLS_SS7HSLMT3 2094

© Copyright IBM Corp. 2008, 2009. All Rights Reserved.

OCTRCGTT 2095
OGUICELS_SS7HSLTRAF 2095
OUTCELLS_SS7HSLTRAF 2095
PDULSTER_SS7HSLMT3 2096
PDUOCTRC_SS7HSLTRAF 2096
PDUOCTTR_SS7HSLTRAF 2096
PDUSRCVD_SS7HSLTRAF 2096
PDUSTRAN_SS7HSLTRAF 2097
PDUSUMER_SS7HSLMT3 2097
PERLEN 2097
PERLEN_C7TM 2098
PROSTAT 2098
PROTRAN 2098
RECVDOCT_MSC_C7Link 2098
RECVDOCT_SS7HSLTRAF 2099
REMINHDUR 2099
RETRNOCT_MSC_C7Link 2099
RINHNO 2099
SAALINSV_SS7HSLMT3 2100
SAMPCNT 2100
SAMPCNT_SS7HSLMT1 2100
SCANSEC_ASC_CCITT7 2101
SDOCTRCV_SS7HSLTRAF 2101
SDOCTRTR_SS7HSLTRAF 2101
SDOCTTRN_SS7HSLTRAF 2102
SDPDURCV_SS7HSLTRAF 2102
SDPDURRR_SS7HSLTRAF 2102
SDPDURTR_SS7HSLTRAF 2103
SDPDUTRN_SS7HSLTRAF 2103
SL10SCAN 2103
SL10SCAN_SS7HSLMT2 2104
SLPARMGP 2104
SLPARMGP_SS7HSLMT2 2104
SYS7IND_C7SL1 2104
SYS7IND_C7SL2 2105
TDCNGLV1 2105
TDCNGLV1_SS7HSLMT1 2105
TDCNGLV2 2106
TDCNGLV2_SS7HSLMT1 2106
TDCNGLV3 2106
TDCNGLV3_SS7HSLMT1 2107
THRACHOV 2107
THRMSUER 2107
THRNEGAK 2108
TLNKACTV 2108
TLNKACTV_SS7HSLMT1 2108
TOTOCMSG_SS7HSLMT1 2108
TOTOCMSU 2109
TOTOCOCT 2109
TOTOCOCT_SS7HSLMT1 2109
TOTPRIO0 2110

Updated: 2009-07-22

TOTPRIO0_SS7HSLMT1 2110
TOTPRIO1 2110
TOTPRIO1_SS7HSLMT1 2111
TOTPRIO2 2111
TOTPRIO2_SS7HSLMT1 2111
TOTPRIO3 2112
TOTPRIO3_SS7HSLMT1 2112
TRANOCT_MSC_C7Link 2112
TRANOCT_SS7HSLTRAF 2112
UNAVAILDUR 2113
UNAVRBLDUR 2113
UNAVSLFDUR 2113
UNEXPDUS_SS7HSLMT3 2114
MSC_SS7LinkSet Primitive Calculations 2114
C7_LSTL_AvgRX 2114
C7_LSTL_AvgTX 2114
Critical_Carried 2114
DIMENSION 2115
GRAPHmultiLineSeparator 2115
GROWTH 2115
INTERVALS 2115
Link_Unavailable 2115
Link_Usage 2115
Links_Q 2115
Ln_Correlation 2116
Ln_Exhaust_Date 2116
Ln_Exhaust_Days 2116
MSUS 2116
Nominal_Capacity 2116
NSLFA 2116
NumberMSUsReceived 2116
NumberMSUsTransmitted 2117
NumberSLFailures 2117
NUMDAYS 2117
NUMHOURS 2117
NumLinks 2117
PercentageLinkAvailability 2117
PercentageLinksetInService 2118
RX_AvgLink 2118
RX_MSUS 2118
RX_Octets 2118
Sample_Size 2118
TX_AvgLink 2118
TX_MSUS 2118
TX_Octets 2119
VENDORTECH 2119
MSC_SS7LinkSet Peg Counts 2119
ASPADUR_MSC 2119
ASPINA_MSC 2119
AVLINKS 2120
AVLINKS_SS7HSLS 2120

© Copyright IBM Corp. 2008, 2009. All Rights Reserved.

CLUSTERCODE_MSC_SS7LS . . . 2120
ICUICELS_SS7HSLS . . . 2120
INCCELLS_SS7HSLS . . . 2121
LINKS . . . 2121
LINKS_SS7HSLS . . . 2121
LSMTCST . . . 2122
LSMTCST_SS7HSLS . . . 2122
MEMBERCODE_MSC_SS7LS . . . 2122
MSC_RELEASE . . . 2123
MSGSRCVD_SS7HSLS . . . 2123
MSGSTRAN_SS7HSLS . . . 2123
MSURECD . . . 2123
MSURETRN . . . 2124
MSUTRAN . . . 2124
N10SCAN_MSC_C7LinkSet . . . 2124
N10SCAN_SS7HSLS . . . 2125
OGUICELS_SS7HSLS . . . 2125
OOSLINKS . . . 2125
OOSLINKS_SS7HSLS . . . 2126
OUTCELLS_SS7HSLS . . . 2126
PDUOCTRC_SS7HSLS . . . 2126
PDUOCTTR_SS7HSLS . . . 2126
PDUSRCVD_SS7HSLS . . . 2127
PDUSTRAN_SS7HSLS . . . 2127
PERLEN . . . 2127
RECVDOCT . . . 2127
RECVDOCT_SS7HSLS . . . 2128
RETRNOCT . . . 2128
SDOCTRCV_SS7HSLS . . . 2128
SDOCTRTR_SS7HSLS . . . 2129
SDOCTTRN_SS7HSLS . . . 2129
SDPDURCV_SS7HSLS . . . 2129
SDPDURTR_SS7HSLS . . . 2130
SDPDUTRN_SS7HSLS . . . 2130
STUNADURAT_MSC . . . 2130
SYS7IND_MSC_C7ADJSLP . . . 2131
SYS7IND_MSC_C7SLSET . . . 2131
TDLSINAC . . . 2131
TDLSINAC_SS7HSLS . . . 2131
TRANOCT . . . 2132
TRANOCT_SS7HSLS . . . 2132
UAVLINKS . . . 2132
UAVLINKS_SS7HSLS . . . 2133
MSC_SS7RouteSet Primitive Calculations . . . 2133
C7_RSAV_% . . . 2133
GRAPHmultiLineSeparator . . . 2133
INTERVALS . . . 2133
NUMDAYS . . . 2134
NUMHOURS . . . 2134
VENDORTECH . . . 2134
MSC_SS7RouteSet Peg Counts . . . 2134

Updated: 2009-07-22

MSC_RELEASE 2134
PERLEN 2134
STINACNT_MSC 2134
STINADURAT_MSC 2135
SYS7IND_MSC_C7RTSET 2135
MSCOutTrunk Primitive Calculations 2135
GRAPHmultiLineSeparator 2135
NUMDAYS 2135
NUMHOURS 2136
MSCOutTrunk Peg Counts 2136
BANSWCNT 2136
CONVLACC 2136
IDISCCNT 2136
MSC_RELEASE 2136
OCONGCNT 2136
ODISCCNT 2136
OTTIME 2136
PERLENSEC 2136
SCANCNT 2136
SCANNINT 2136
THCONCNT 2137
TRALACC 2137
MSCTrunkDest Primitive Calculations 2137
BANSWCNT_TrunkDest 2137
CONVLACC_TrunkDest 2137
DestinationTraffic_AfterBAnsw 2137
DestinationTraffic_BeforeBAnsw 2137
GRAPHmultiLineSeparator 2137
IDISCCNT_TrunkDest 2138
INTERVALS_TRDIP 2138
NUMDAYS 2138
NUMHOURS 2138
OCONGCNT_TrunkDest 2138
ODISCCNT_TrunkDest 2138
OTTIME_TrunkDest 2138
SCANCNT_TrunkDest 2139
SCANNINT_TrunkDest 2139
THCONCNT_TrunkDest 2139
TRALACC_TrunkDest 2139
MSCTrunkDest Peg Counts 2139
BANSWCNT 2139
CONVLACC 2140
IDISCCNT 2140
MSC_Release 2140
OCONGCNT 2140
ODISCCNT 2141
OTTIME 2141
PERLEN_TRDIP 2141
SCANCNT 2141
SCANNINT 2142

© Copyright IBM Corp. 2008, 2009. All Rights Reserved.

THCONCNT 2142
TRALACC 2142
MSCTrunkType Primitive Calculations 2142
GRAPHmultiLineSeparator 2143
INTERVALS 2143
LocalName 2143
NUMDAYS 2143
NUMHOURS 2143
VENDORTECH 2143
MSCTrunkType Peg Counts 2143
MSC_RELEASE 2144
NDISS 2144
NDISSBLOC 2144
NFAUSBLOC 2144
NNOTSEIZE 2145
NQUAS 2145
NQUASBLOC 2145
PERLEN 2145
Multiplex_Section Primitive Calculations 2146
GRAPHmultiLineSeparator 2146
LocalName 2146
NUMDAYS 2146
NUMHOURS 2146
Multiplex_Section Peg Counts 2146
MSFBBE 2146
MSFES 2147
MSFSES 2147
MSFUAS 2147
MSFUAV 2148
MSNBBE 2148
MSNES 2148
MSNSES 2148
MSNUAS 2149
MSNUAV 2149
PERLEN 2149
SMI 2150
NB_MSC Primitive Calculations 2150
GRAPHmultiLineSeparator 2150
INTERVALS 2150
LocalName 2150
NUMDAYS 2150
NUMHOURS 2151
VENDORTECH 2151
NB_MSC Peg Counts 2151
MSC_RELEASE 2151
NBIRASDHTOT 2151
NBIRATCHTOT 2151
NBNSCASUCC 2152
NBNSCATOT 2152
NBORASDHTOT 2152

Updated: 2009-07-22

NBORATCHTOT 2153
NBRASDHTOT 2153
NBRATCHTOT 2153
NBRSASDHSUCC 2154
NBRSATCHSUCC 2154
NBSCHASUCC 2154
NBSCHATOT 2155
NBSIRASDHSUCC 2155
NBSIRATCHSUCC 2155
NBSORASDHSUCC 2156
NBSORATCHSUCC 2156
NBSRASDHTOT 2156
NBSRATCHTOT 2157
NBSRATSDHTOT 2157
NBSRATTCHTOT 2157
NBSSRAATCHSUCC 2158
NBSSRASDHSUCC 2158
NBSSRATSDHSUCC 2158
NBSSRATTCHSUCC 2159
NCELHNDSUCC 2159
NCELHNDTOT 2159
NNBRBUGASCSUCC 2160
NNBRBUGASCTOT 2160
NNBRBUGASUCC 2160
NNBRBUGATOT 2161
NNBRBUGSTSUCC 2161
NNBRBUGSTTOT 2161
NNBRHBAISDHSUCC 2162
NNBRHBAISDHTOT 2162
NNBRHBANSUCC 2162
NNBRHBANTOT 2163
NNBRHBAOSDHSUCC 2163
NNBRHBAOSDHTOT 2163
NNBRHBSTSUCC 2163
NNBRHBSTTOT 2164
NNBRHBTTSUCC 2164
NNBRHBTTTOT 2164
NNBRHINASUCC 2165
NNBRHINATOT 2165
NNBRHSANSUCC 2165
NNBRHSANTOT 2166
NNBRHSISDHSUCC 2166
NNBRHSISDHTOT 2166
NNBRHSNASUCC 2167
NNBRHSNATOT 2167
NNBRHSOSDHSUCC 2167
NNBRHSOSDHTOT 2168
NNBRHTHISDHSUCC 2168
NNBRHTHISDHTOT 2168
NNBRHTHISUCC 2169
NNBRHTHITOT 2169

© Copyright IBM Corp. 2008, 2009. All Rights Reserved.

NNBRIHOATCHTOT 2169
NNBRISDHHOATOT 2170
NNBRITCHHOASUCC 2170
NNBRNSUGSCASUCC 2171
NNBRNUGSCATOT 2171
NNBRSCHARSUCC 2171
NNBRSCHARTOT 2172
NNBRSCHASSUCC 2172
NNBRSCHASTOT 2172
NNBRSIHOATCHSUCC 2173
NNBRSUGSCASUCC 2173
NNBRSUGSSUCC 2173
NNBRSUGSTOT 2174
NNBRSUGSUCC 2174
NNBRSUGTOT 2174
NNBRUGSCATOT 2175
NNGSUSCASUCC 2175
NNGUHASUCC 2175
NNGUHATOT 2176
NNGUHBSUCC 2176
NNGUHBTOT 2176
NNGUHISSUCC 2176
NNGUHISTOT 2177
NNGUHISUCC 2177
NNGUHITOT 2177
NNGUHSSSUCC 2178
NNGUHSSTOT 2178
NNGUHSSUCC 2178
NNGUHSTOT 2179
NNGUHTSSUCC 2179
NNGUHTSTOT 2179
NNGUHTSUCC 2180
NNGUHTTOT 2180
NNGUSCATOT 2180
NNGUSTSUCC 2181
NNGUSTTOT 2181
NNSCHASUCC 2181
NNSCHATOT 2182
PERLEN 2182
NBCell Primitive Calculations 2182
GRAPHmultiLineSeparator 2182
HO_CAUSEALL 2182
HO_DIRRETRY 2182
HO_DWNLKLVL 2182
HO_LOST 2183
HO_SUC% 2183
HO_SUCBTCEL% 2183
HO_SUCHIHR% 2183
HO_SUCWRCEL% 2183
HO_UPLNKLVL 2183
HOE_LOST 2183

Updated: 2009-07-22

HOE_LOST% 2184
HOE_SUC 2184
HOE_TOT 2184
HOI_LOST 2184
HOI_LOST% 2184
HOI_SUC 2184
HOI_TOT 2185
INTERVALS 2185
LocalName 2185
NUMDAYS 2185
NUMHOURS 2185
VENDORTECH 2185
NBCell Peg Counts 2185
BSS_RELEASE 2186
HOASBCL 2186
HOASWCL 2186
HOATTHR 2186
HOATTHSS 2187
HOATTLSS 2187
HOATTSHOULDUTRAN 2188
HODUPFT 2188
HODWNQA 2188
HOEXCTA 2189
HOREQCNTUTRAN 2189
HORTTOCH 2189
HORTTOCHUTRAN 2190
HOSUCBCL 2190
HOSUCHR 2191
HOSUCWCL 2191
HOTOHCS 2191
HOTOKCL 2192
HOTOLCL 2192
HOUPLQA 2193
HOVERCNT 2193
HOVERCNTUTRAN 2193
HOVERSUC 2194
HOVERSUCUTRAN 2194
NBTYPE 2194
PERLEN 2194
SUCURGHOUTRAN 2194
URGHOVERUTRAN 2195
NI Primitive Calculations 2195
GRAPHmultiLineSeparator 2195
NUMDAYS 2195
NUMHOURS 2195
ProblemCode Primitive Calculations 2196
GRAPHmultiLineSeparator 2196
INTERVALS 2196
NUMDAYS 2196
NUMHOURS 2196

© Copyright IBM Corp. 2008, 2009. All Rights Reserved.

VENDORTECH 2196
ProblemCode Peg Counts 2196
MSC_RELEASE 2197
NERRSIT 2197
PERLEN 2197
RECEIVED 2197
SENT 2197
QOS Primitive Calculations 2198
Ave_LLC_PDU_per_TBF 2198
Ave_LLC_PDU_Throughput 2198
GRAPHmultiLineSeparator 2198
INTERVALS 2198
LocalName 2198
Nof_TBF 2198
NUMDAYS 2199
NUMHOURS 2199
VENDORTECH 2199
QOS Peg Counts 2199
BSS_RELEASE 2199
NUMBERLLCPDU 2199
NUMBERTBF 2200
PERLEN 2200
PFCLIFETIME 2200
Radio Primitive Calculations 2200
GRAPHmultiLineSeparator 2200
NUMDAYS 2201
NUMHOURS 2201
Radio Peg Counts 2201
Transiver_ID 2201
RNCSTAT Primitive Calculations 2201
GRAPHmultiLineSeparator 2201
NUMDAYS 2201
NUMHOURS 2201
VENDORTECH 2202
RNCSTAT Peg Counts 2202
MSC_RELEASE 2202
NBSTSSMTOT 2202
NRNFRMSCCI 2202
NRNFRMTOTI 2203
NRNFRRRTOT 2203
NRNTIHRSUCC 2203
NRNTIHRUSUCC 2203
NRNTLRCTOT 2204
NRNTLRDRTOT 2204
NRNTLRDSUCC 2204
NRNTLRSUCC 2205
NRNTOHRSUCC 2205
NRNTOMSCCO 2205
NRNTOMTOTO 2206
NRNTORGSUCC 2206

Updated: 2009-07-22

NRNTORRTOT 2206
NRNTRRCTOT 2207
NRNTRRRGTOT 2207
NRNTRRRTOT 2207
NRNTSRRTOT 2208
NRNTSRRUTOT 2208
PERLEN 2208
RXOTS Primitive Calculations 2208
GRAPHmultiLineSeparator 2208
INTERVALS 2208
NUMDAYS 2209
NUMHOURS 2209
VENDORTECH 2209
RXOTS Peg Counts 2209
BSS_RELEASE 2209
CONCNT 2209
CONERRCNT 2210
ID1_MOTS 2210
ID2_MOTS 2210
PERLEN 2210
SAE Primitive Calculations 2211
GRAPHmultiLineSeparator 2211
INTERVALS 2211
NUMDAYS 2211
NUMHOURS 2211
VENDORTECH 2211
SAE Peg Counts 2211
ID1_MSC_SAE 2211
ID2_MSC_SAE 2212
MSC_RELEASE 2212
NCALLS_MSC_SAE 2212
NIND_MSC_SAE 2212
NOVERFLOW_MSC_SAE 2213
NSCAN_MSC_SAE 2213
NTRAL_MSC_SAE 2213
NTRALACC_MSC_SAE 2214
PERLEN 2214
SAE_Block Primitive Calculations 2214
GRAPHmultiLineSeparator 2214
NUMDAYS 2214
NUMHOURS 2214
ServFeature_MSC Primitive Calculations 2215
GRAPHmultiLineSeparator 2215
NUMDAYS 2215
NUMHOURS 2215
ServFeature_MSC Peg Counts 2215
NSERVFEATINV 2215
SGSN_MSC Primitive Calculations 2215
GRAPHmultiLineSeparator 2215
NUMDAYS 2216

© Copyright IBM Corp. 2008, 2009. All Rights Reserved.

NUMHOURS 2216
SGSN_MSC Peg Counts 2216
NPAG1SGSNTOT 2216
NPAG2SGSNTOT 2216
NSGSNRESETREC 2216
NSGSNRESETSENT 2216
SPG Primitive Calculations 2216
GRAPHmultiLineSeparator 2216
NUMDAYS 2216
NUMHOURS 2217
SPNode Primitive Calculations 2217
GRAPHmultiLineSeparator 2217
INTERVALS 2217
NUMDAYS 2217
NUMHOURS 2217
VENDORTECH 2217
SPNode Peg Counts 2218
ACCFRPM 2218
ACCLOAD 2218
ACCSPIST 2218
BSS_RELEASE 2219
DATALOSTFLAG_SPSP 2219
MAXFRPM 2219
MINFRPM 2219
NOLRGUPFMS 2220
NOSMUPFMS 2220
NPERREL 2220
NPERRES 2221
NRELA_SPSP 2221
NRELM_SPSP 2221
NRESA 2221
NRESM 2222
NSCAN 2222
PERLEN 2222
SIZEPM 2222
Subcell Primitive Calculations 2223
GRAPHmultiLineSeparator 2223
NUMDAYS 2223
NUMHOURS 2223
Subcell Peg Counts 2223
AMR_Connection_Filter 2223
BSPOWER_10Range_10 2224
BSPOWER_12Range_12 2224
BSPOWER_14Range_14 2224
BSPOWER_16Range_16 2224
BSPOWER_18Range_18 2224
BSPOWER_20Range_20 2224
BSPOWER_22Range_22 2224
BSPOWER_24Range_24 2225
BSPOWER_26Range_26 2225

BSPOWER_28Range_28 2225
BSPOWER_2Range_2 2225
BSPOWER_30Range_30 2225
BSPOWER_4Range_4 2225
BSPOWER_6Range_6 2226
BSPOWER_8Range_8 2226
BSPOWER0Range0 2226
CellSetName 2226
MSPOWER0Range0 2226
MSPOWER10Range10 2226
MSPOWER11Range11 2226
MSPOWER12Range12 2227
MSPOWER13Range13 2227
MSPOWER14Range14 2227
MSPOWER15Range15 2227
MSPOWER16Range16 2227
MSPOWER17Range17 2227
MSPOWER18Range18 2228
MSPOWER19Range19 2228
MSPOWER1Range1 2228
MSPOWER20Range20 2228
MSPOWER21Range21 2228
MSPOWER22Range22 2228
MSPOWER23Range23 2228
MSPOWER24Range24 2229
MSPOWER25Range25 2229
MSPOWER26Range26 2229
MSPOWER27Range27 2229
MSPOWER28Range28 2229
MSPOWER29Range29 2229
MSPOWER2Range2 2230
MSPOWER30Range30 2230
MSPOWER31Range31 2230
MSPOWER32Range32 2230
MSPOWER33Range33 2230
MSPOWER34Range34 2230
MSPOWER35Range35 2230
MSPOWER36Range36 2231
MSPOWER37Range37 2231
MSPOWER38Range38 2231
MSPOWER39Range39 2231
MSPOWER3Range3 2231
MSPOWER4Range4 2231
MSPOWER5Range5 2232
MSPOWER6Range6 2232
MSPOWER7Range7 2232
MSPOWER8Range8 2232
MSPOWER9Range9 2232
noOfMeasFiltered 2232
noOfMeasUnfiltered 2232
PATHLOSSDIFF_10Range_10 2233

© Copyright IBM Corp. 2008, 2009. All Rights Reserved.

PATHLOSSDIFF_11Range_11 2233
PATHLOSSDIFF_12Range_12 2233
PATHLOSSDIFF_13Range_13 2233
PATHLOSSDIFF_14Range_14 2233
PATHLOSSDIFF_15Range_15 2233
PATHLOSSDIFF_16Range_16 2234
PATHLOSSDIFF_17Range_17 2234
PATHLOSSDIFF_18Range_18 2234
PATHLOSSDIFF_19Range_19 2234
PATHLOSSDIFF_1Range_1 2234
PATHLOSSDIFF_20Range_20 2234
PATHLOSSDIFF_21Range_21 2234
PATHLOSSDIFF_22Range_22 2235
PATHLOSSDIFF_23Range_23 2235
PATHLOSSDIFF_24Range_24 2235
PATHLOSSDIFF_25Range_25 2235
PATHLOSSDIFF_2Range_2 2235
PATHLOSSDIFF_3Range_3 2235
PATHLOSSDIFF_4Range_4 2236
PATHLOSSDIFF_5Range_5 2236
PATHLOSSDIFF_6Range_6 2236
PATHLOSSDIFF_7Range_7 2236
PATHLOSSDIFF_8Range_8 2236
PATHLOSSDIFF_9Range_9 2236
PATHLOSSDIFF0Range0 2236
PATHLOSSDIFF10Range10 2237
PATHLOSSDIFF11Range11 2237
PATHLOSSDIFF12Range12 2237
PATHLOSSDIFF13Range13 2237
PATHLOSSDIFF14Range14 2237
PATHLOSSDIFF15Range15 2237
PATHLOSSDIFF16Range16 2238
PATHLOSSDIFF17Range17 2238
PATHLOSSDIFF18Range18 2238
PATHLOSSDIFF19Range19 2238
PATHLOSSDIFF1Range1 2238
PATHLOSSDIFF20Range20 2238
PATHLOSSDIFF21Range21 2238
PATHLOSSDIFF22Range22 2239
PATHLOSSDIFF23Range23 2239
PATHLOSSDIFF24Range24 2239
PATHLOSSDIFF25Range25 2239
PATHLOSSDIFF2Range2 2239
PATHLOSSDIFF3Range3 2239
PATHLOSSDIFF4Range4 2240
PATHLOSSDIFF5Range5 2240
PATHLOSSDIFF6Range6 2240
PATHLOSSDIFF7Range7 2240
PATHLOSSDIFF8Range8 2240
PATHLOSSDIFF9Range9 2240
PATHLOSSDL100Range101 2240

PATHLOSSDL102Range103 2241
PATHLOSSDL104Range105 2241
PATHLOSSDL106Range107 2241
PATHLOSSDL108Range109 2241
PATHLOSSDL110Range111 2241
PATHLOSSDL112Range113 2241
PATHLOSSDL114Range115 2242
PATHLOSSDL116Range117 2242
PATHLOSSDL118Range119 2242
PATHLOSSDL120Range121 2242
PATHLOSSDL122Range123 2242
PATHLOSSDL124Range125 2242
PATHLOSSDL126Range127 2242
PATHLOSSDL128Range129 2243
PATHLOSSDL130Range131 2243
PATHLOSSDL132Range133 2243
PATHLOSSDL134Range135 2243
PATHLOSSDL136Range137 2243
PATHLOSSDL138Range139 2243
PATHLOSSDL140Range141 2244
PATHLOSSDL142Range143 2244
PATHLOSSDL144Range145 2244
PATHLOSSDL146Range147 2244
PATHLOSSDL148Range149 2244
PATHLOSSDL150Range151 2244
PATHLOSSDL152Range153 2244
PATHLOSSDL154Range155 2245
PATHLOSSDL156Range157 2245
PATHLOSSDL158Range190 2245
PATHLOSSDL30Range31 2245
PATHLOSSDL32Range33 2245
PATHLOSSDL34Range35 2245
PATHLOSSDL36Range37 2246
PATHLOSSDL38Range39 2246
PATHLOSSDL40Range41 2246
PATHLOSSDL42Range43 2246
PATHLOSSDL44Range45 2246
PATHLOSSDL46Range47 2246
PATHLOSSDL48Range49 2246
PATHLOSSDL50Range51 2247
PATHLOSSDL52Range53 2247
PATHLOSSDL54Range55 2247
PATHLOSSDL56Range57 2247
PATHLOSSDL58Range59 2247
PATHLOSSDL60Range61 2247
PATHLOSSDL62Range63 2248
PATHLOSSDL64Range65 2248
PATHLOSSDL66Range67 2248
PATHLOSSDL68Range69 2248
PATHLOSSDL70Range71 2248
PATHLOSSDL72Range73 2248

© Copyright IBM Corp. 2008, 2009. All Rights Reserved.

PATHLOSSDL74Range75 2248
PATHLOSSDL76Range77 2249
PATHLOSSDL78Range79 2249
PATHLOSSDL80Range81 2249
PATHLOSSDL82Range83 2249
PATHLOSSDL84Range85 2249
PATHLOSSDL86Range87 2249
PATHLOSSDL88Range89 2250
PATHLOSSDL90Range91 2250
PATHLOSSDL92Range93 2250
PATHLOSSDL94Range95 2250
PATHLOSSDL96Range97 2250
PATHLOSSDL98Range99 2250
PATHLOSSUL100Range101 2250
PATHLOSSUL102Range103 2251
PATHLOSSUL104Range105 2251
PATHLOSSUL106Range107 2251
PATHLOSSUL108Range109 2251
PATHLOSSUL110Range111 2251
PATHLOSSUL112Range113 2251
PATHLOSSUL114Range115 2252
PATHLOSSUL116Range117 2252
PATHLOSSUL118Range119 2252
PATHLOSSUL120Range121 2252
PATHLOSSUL122Range123 2252
PATHLOSSUL124Range125 2252
PATHLOSSUL126Range127 2252
PATHLOSSUL128Range129 2253
PATHLOSSUL130Range131 2253
PATHLOSSUL132Range133 2253
PATHLOSSUL134Range135 2253
PATHLOSSUL136Range137 2253
PATHLOSSUL138Range139 2253
PATHLOSSUL140Range141 2254
PATHLOSSUL142Range143 2254
PATHLOSSUL144Range145 2254
PATHLOSSUL146Range147 2254
PATHLOSSUL148Range153 2254
PATHLOSSUL30Range31 2254
PATHLOSSUL32Range33 2254
PATHLOSSUL34Range35 2255
PATHLOSSUL36Range37 2255
PATHLOSSUL38Range39 2255
PATHLOSSUL40Range41 2255
PATHLOSSUL42Range43 2255
PATHLOSSUL44Range45 2255
PATHLOSSUL46Range47 2256
PATHLOSSUL48Range49 2256
PATHLOSSUL50Range51 2256
PATHLOSSUL52Range53 2256
PATHLOSSUL54Range55 2256

PATHLOSSUL56Range57 2256
PATHLOSSUL58Range59 2256
PATHLOSSUL60Range61 2257
PATHLOSSUL62Range63 2257
PATHLOSSUL64Range65 2257
PATHLOSSUL66Range67 2257
PATHLOSSUL68Range69 2257
PATHLOSSUL70Range71 2257
PATHLOSSUL72Range73 2258
PATHLOSSUL74Range75 2258
PATHLOSSUL76Range77 2258
PATHLOSSUL78Range79 2258
PATHLOSSUL80Range81 2258
PATHLOSSUL82Range83 2258
PATHLOSSUL84Range85 2258
PATHLOSSUL86Range87 2259
PATHLOSSUL88Range89 2259
PATHLOSSUL90Range91 2259
PATHLOSSUL92Range93 2259
PATHLOSSUL94Range95 2259
PATHLOSSUL96Range97 2259
PATHLOSSUL98Range99 2260
PERLENSEC 2260
RXLEVDL0Range0 2260
RXLEVDL10Range10 2260
RXLEVDL11Range11 2260
RXLEVDL12Range12 2260
RXLEVDL13Range13 2260
RXLEVDL14Range14 2261
RXLEVDL15Range15 2261
RXLEVDL16Range16 2261
RXLEVDL17Range17 2261
RXLEVDL18Range18 2261
RXLEVDL19Range19 2261
RXLEVDL1Range1 2262
RXLEVDL20Range20 2262
RXLEVDL21Range21 2262
RXLEVDL22Range22 2262
RXLEVDL23Range23 2262
RXLEVDL24Range24 2262
RXLEVDL25Range25 2262
RXLEVDL26Range26 2263
RXLEVDL27Range27 2263
RXLEVDL28Range28 2263
RXLEVDL29Range29 2263
RXLEVDL2Range2 2263
RXLEVDL30Range30 2263
RXLEVDL31Range31 2264
RXLEVDL32Range32 2264
RXLEVDL33Range33 2264
RXLEVDL34Range34 2264

© Copyright IBM Corp. 2008, 2009. All Rights Reserved.

RXLEVDL35Range35 2264
RXLEVDL36Range36 2264
RXLEVDL37Range37 2264
RXLEVDL38Range38 2265
RXLEVDL39Range39 2265
RXLEVDL3Range3 2265
RXLEVDL40Range40 2265
RXLEVDL41Range41 2265
RXLEVDL42Range42 2265
RXLEVDL43Range43 2266
RXLEVDL44Range44 2266
RXLEVDL45Range45 2266
RXLEVDL46Range46 2266
RXLEVDL47Range47 2266
RXLEVDL48Range48 2266
RXLEVDL49Range49 2266
RXLEVDL4Range4 2267
RXLEVDL50Range50 2267
RXLEVDL51Range51 2267
RXLEVDL52Range52 2267
RXLEVDL53Range53 2267
RXLEVDL54Range54 2267
RXLEVDL55Range55 2268
RXLEVDL56Range56 2268
RXLEVDL57Range57 2268
RXLEVDL58Range58 2268
RXLEVDL59Range59 2268
RXLEVDL5Range5 2268
RXLEVDL60Range60 2268
RXLEVDL61Range61 2269
RXLEVDL62Range62 2269
RXLEVDL63Range63 2269
RXLEVDL6Range6 2269
RXLEVDL7Range7 2269
RXLEVDL8Range8 2269
RXLEVDL9Range9 2270
RXLEVUL0Range0 2270
RXLEVUL10Range10 2270
RXLEVUL11Range11 2270
RXLEVUL12Range12 2270
RXLEVUL13Range13 2270
RXLEVUL14Range14 2270
RXLEVUL15Range15 2271
RXLEVUL16Range16 2271
RXLEVUL17Range17 2271
RXLEVUL18Range18 2271
RXLEVUL19Range19 2271
RXLEVUL1Range1 2271
RXLEVUL20Range20 2272
RXLEVUL21Range21 2272
RXLEVUL22Range22 2272

RXLEVUL23Range23 2272
RXLEVUL24Range24 2272
RXLEVUL25Range25 2272
RXLEVUL26Range26 2272
RXLEVUL27Range27 2273
RXLEVUL28Range28 2273
RXLEVUL29Range29 2273
RXLEVUL2Range2 2273
RXLEVUL30Range30 2273
RXLEVUL31Range31 2273
RXLEVUL32Range32 2274
RXLEVUL33Range33 2274
RXLEVUL34Range34 2274
RXLEVUL35Range35 2274
RXLEVUL36Range36 2274
RXLEVUL37Range37 2274
RXLEVUL38Range38 2274
RXLEVUL39Range39 2275
RXLEVUL3Range3 2275
RXLEVUL40Range40 2275
RXLEVUL41Range41 2275
RXLEVUL42Range42 2275
RXLEVUL43Range43 2275
RXLEVUL44Range44 2276
RXLEVUL45Range45 2276
RXLEVUL46Range46 2276
RXLEVUL47Range47 2276
RXLEVUL48Range48 2276
RXLEVUL49Range49 2276
RXLEVUL4Range4 2276
RXLEVUL50Range50 2277
RXLEVUL51Range51 2277
RXLEVUL52Range52 2277
RXLEVUL53Range53 2277
RXLEVUL54Range54 2277
RXLEVUL55Range55 2277
RXLEVUL56Range56 2278
RXLEVUL57Range57 2278
RXLEVUL58Range58 2278
RXLEVUL59Range59 2278
RXLEVUL5Range5 2278
RXLEVUL60Range60 2278
RXLEVUL61Range61 2278
RXLEVUL62Range62 2279
RXLEVUL63Range63 2279
RXLEVUL6Range6 2279
RXLEVUL7Range7 2279
RXLEVUL8Range8 2279
RXLEVUL9Range9 2279
RXQUALDL0Range0 2280
RXQUALDL1Range1 2280

© Copyright IBM Corp. 2008, 2009. All Rights Reserved.

RXQUALDL2Range2 2280
RXQUALDL3Range3 2280
RXQUALDL4Range4 2280
RXQUALDL5Range5 2280
RXQUALDL6Range6 2280
RXQUALDL7Range7 2281
RXQUALUL0Range0 2281
RXQUALUL1Range1 2281
RXQUALUL2Range2 2281
RXQUALUL3Range3 2281
RXQUALUL4Range4 2281
RXQUALUL5Range5 2282
RXQUALUL6Range6 2282
RXQUALUL7Range7 2282
TAVAL0Range0 2282
TAVAL104Range113 2282
TAVAL10Range10 2282
TAVAL114Range123 2282
TAVAL11Range11 2283
TAVAL124Range133 2283
TAVAL12Range12 2283
TAVAL134Range143 2283
TAVAL13Range13 2283
TAVAL144Range163 2283
TAVAL14Range14 2284
TAVAL15Range15 2284
TAVAL164Range183 2284
TAVAL16Range16 2284
TAVAL17Range17 2284
TAVAL184Range203 2284
TAVAL18Range18 2284
TAVAL19Range19 2285
TAVAL1Range1 2285
TAVAL204Range219 2285
TAVAL20Range20 2285
TAVAL21Range21 2285
TAVAL22Range22 2285
TAVAL23Range23 2286
TAVAL24Range24 2286
TAVAL25Range25 2286
TAVAL26Range26 2286
TAVAL27Range27 2286
TAVAL28Range28 2286
TAVAL29Range29 2286
TAVAL2Range2 2287
TAVAL30Range30 2287
TAVAL31Range31 2287
TAVAL32Range32 2287
TAVAL33Range33 2287
TAVAL34Range34 2287
TAVAL35Range35 2288

TAVAL36Range36 2288
TAVAL37Range37 2288
TAVAL38Range38 2288
TAVAL39Range39 2288
TAVAL3Range3 2288
TAVAL40Range40 2288
TAVAL41Range41 2289
TAVAL42Range42 2289
TAVAL43Range43 2289
TAVAL44Range44 2289
TAVAL45Range45 2289
TAVAL46Range46 2289
TAVAL47Range47 2290
TAVAL48Range48 2290
TAVAL49Range49 2290
TAVAL4Range4 2290
TAVAL50Range50 2290
TAVAL51Range51 2290
TAVAL52Range52 2290
TAVAL53Range53 2291
TAVAL54Range54 2291
TAVAL55Range55 2291
TAVAL56Range56 2291
TAVAL57Range57 2291
TAVAL58Range58 2291
TAVAL59Range59 2292
TAVAL5Range5 2292
TAVAL60Range60 2292
TAVAL61Range61 2292
TAVAL62Range62 2292
TAVAL63Range63 2292
TAVAL64Range73 2292
TAVAL6Range6 2293
TAVAL74Range83 2293
TAVAL7Range7 2293
TAVAL84Range93 2293
TAVAL8Range8 2293
TAVAL94Range103 2293
TAVAL9Range9 2294
Subsystem_Number Primitive Calculations 2294
GRAPHmultiLineSeparator 2294
NUMDAYS 2294
NUMHOURS 2294
Subsystem_Number Peg Counts 2294
COMINCINT 2294
COMOUTINT 2295
COMSGORIG 2295
COMSGTERM 2295
DT1ORIG 2296
DT1TERM 2296
PERLEN 2296

© Copyright IBM Corp. 2008, 2009. All Rights Reserved.

Super_Channel Primitive Calculations 2296
GRAPHmultiLineSeparator 2296
NUMDAYS 2296
NUMHOURS 2297
Super_Channel Peg Counts 2297
AVDELDLSCBUF 2297
AVDELULSCBUF 2297
DL7075SCLOAD 2297
DL7680SCLOAD 2298
DL8185SCLOAD 2298
DL8690SCLOAD 2298
DL9195SCLOAD 2299
DL9600SCLOAD 2299
DLCSSCBUFTHR 2299
DLPSSCBUFTHR 2300
FCSLOSTDL 2300
FCSLOSTUL 2300
FJBUFDELDL 2301
FJBUFDELUL 2301
FJBUFDLSCAN 2301
FJBUFULSCAN 2302
FPSLOSTDL 2302
FPSLOSTUL 2302
FSCBUFDELDL 2303
FSCBUFDELUL 2303
FSCBUFDLSCAN 2303
FSCBUFULSCAN 2303
KBMAXREC 2304
KBMAXSENT 2304
KBREC 2304
KBSCAN 2305
KBSENT 2305
LOSTDLPACK 2305
LOSTULPACK 2306
SC 2306
SCGR 2306
THRDLPACK 2307
THRULPACK 2307
TOTDLPSSCFRBUF 2307
TOTFRDLSCBUF 2308
TOTFRULSCBUF 2308
TOTULPSSCFRBUF 2308
UL7075SCLOAD 2309
UL7680SCLOAD 2309
UL8185SCLOAD 2309
UL8690SCLOAD 2310
UL9195SCLOAD 2310
UL9600SCLOAD 2310
ULPSSCBUFTHR 2311
ULSCBUFTHR 2311
SUPPSERVICE Primitive Calculations 2311

Updated: 2009-07-22

GRAPHmultiLineSeparator . . . 2311
INTERVALS . . . 2311
LocalName . . . 2312
NUMDAYS . . . 2312
NUMHOURS . . . 2312
VENDORTECH . . . 2312
SUPPSERVICE Peg Counts . . . 2312
MSC_RELEASE . . . 2312
NSSINTTOT . . . 2312
NSSINVTOT . . . 2313
NSSIT1TOT . . . 2313
NSSIT2TOT . . . 2313
NSSIV1TOT . . . 2314
NSSIV2TOT . . . 2314
NSSIVS1TOT . . . 2314
NSSIVS2TOT . . . 2314
NSSIVSTOT . . . 2315
NSSRETTOT . . . 2315
NSSRT1TOT . . . 2315
NSSRT2TOT . . . 2316
PERLEN . . . 2316
Switch_Netw_Terminal Primitive Calculations . . . 2316
GRAPHmultiLineSeparator . . . 2316
NUMDAYS . . . 2316
NUMHOURS . . . 2317
Switch_Netw_Terminal Peg Counts . . . 2317
BLOL . . . 2317
NBLOCACC . . . 2317
NDEV . . . 2317
PERLEN . . . 2318
Synchr_Digi_paths Primitive Calculations . . . 2318
GRAPHmultiLineSeparator . . . 2318
NUMDAYS . . . 2318
NUMHOURS . . . 2318
System Primitive Calculations . . . 2318
GRAPHmultiLineSeparator . . . 2318
NUMDAYS . . . 2319
NUMHOURS . . . 2319
PercentActiveSubscribers . . . 2319
PercentRegisteredSubscribers . . . 2319
pTotalGGSNPacketSuccessRate . . . 2319
pTotalSessionManSuccessRateGGSN . . . 2319
RegisteredInroamers . . . 2320
RegisteredOutroamer . . . 2320
SubscribersHLR . . . 2320
SubscribersVLR . . . 2320
TotalCellTCHTraffic . . . 2320
TotalSwitchedTraffic . . . 2320
TCAP_Obj Primitive Calculations . . . 2320
GRAPHmultiLineSeparator . . . 2321

© Copyright IBM Corp. 2008, 2009. All Rights Reserved.

INTERVALS . . . 2321
NUMDAYS . . . 2321
NUMHOURS . . . 2321
VENDORTECH . . . 2321
TCAP_Obj Peg Counts . . . 2321
DETECT . . . 2321
MSC_RELEASE . . . 2322
PERLEN . . . 2322
RECEIVED_TCCMP . . . 2322
RECEIVED_TCDIA . . . 2322
RECEIVED_TCMSG . . . 2322
SENT_TCCMP . . . 2323
SENT_TCDIA . . . 2323
SENT_TCMSG . . . 2323
URECEIVED . . . 2324
USENT . . . 2324
TCAP_SubSystem Primitive Calculations . . . 2324
GRAPHmultiLineSeparator . . . 2324
INTERVALS . . . 2325
NUMDAYS . . . 2325
NUMHOURS . . . 2325
VENDORTECH . . . 2325
TCAP_SubSystem Peg Counts . . . 2325
MSC_RELEASE . . . 2325
NMSGDLVDSSN . . . 2325
NMSGORIGSSN . . . 2326
PERLEN . . . 2326
Time_Slot Primitive Calculations . . . 2326
GRAPHmultiLineSeparator . . . 2326
INTERVALS . . . 2326
NUMDAYS . . . 2326
NUMHOURS . . . 2327
Time_Slot Peg Counts . . . 2327
BSS_RELEASE . . . 2327
CONCNT . . . 2327
CONERRCNT . . . 2327
ID1_MOTS . . . 2327
ID2_MOTS . . . 2328
PERLEN . . . 2328
TrafficType Primitive Calculations . . . 2328
AnsSwitchedCalls . . . 2328
FailedSwitchedCalls . . . 2328
GRAPHmultiLineSeparator . . . 2329
INTERVALS . . . 2329
INTERVALS_TRART . . . 2329
NANSW . . . 2329
NCALLS . . . 2329
NECONG . . . 2329
NICONG . . . 2329
NSCAN . . . 2330

Updated: 2009-07-22

NTRALACC 2330
NUMDAYS 2330
NUMHOURS 2330
NUNSUCC 2330
PercentageAnsweredSwitchedCalls 2330
PercentageFailedSwitchedCalls 2330
SwitchedAttmpt 2331
SwitchedCalls 2331
SwitchedTraffic 2331
TT_AnsBidRatio 2331
TT_AnsSeizeRatio 2331
TT_RejCalls 2331
TT_Seizures 2331
TT_Traffic 2332
VENDORTECH 2332
TrafficType Peg Counts 2332
MSC_RELEASE 2332
NANSW_MTRAFTYPE 2332
NANSW_TRAFFTYPE 2332
NAREPLACE 2333
NBLOBY 2333
NBLOOY 2333
NBUSY 2334
NCALLS_MTRAFTYPE 2334
NCALLS_TRAFFTYPE 2334
NCONGSIG 2334
NDVB 2335
NDVO 2335
NECONG_MTRAFTYPE 2335
NECONG_TRAFFTYPE 2336
NFAULTSIG 2336
NICONG_MTRAFTYPE 2336
NICONG_TRAFFTYPE 2337
NINACC 2337
NISDNCALLS 2337
NLKPDSIG 2338
NNMBLOC 2338
NNONEX 2338
NRELAFTD 2339
NRELBEFD 2339
NRELDURD 2339
NSCAN_MTRAFTYPE 2339
NSCAN_TRAFFTYPE 2340
NSUEOS 2340
NTHCON 2340
NTIMEOUT 2341
NTOBEFD 2341
NTODURD 2341
NTRALACC_MTRAFTYPE 2342
NTRALACC_TRAFFTYPE 2342
NUNSUCC_MTRAFTYPE 2342

© Copyright IBM Corp. 2008, 2009. All Rights Reserved.

NUNSUCC_TRAFFTYPE 2343
PERLEN 2343
PERLEN_TRART 2343
TRAL_MTRAFTYPE 2343
TRAL_TRAFFTYPE 2343
TraffOrigin Primitive Calculations 2344
GRAPHmultiLineSeparator 2344
LocalName 2344
NUMDAYS 2344
NUMHOURS 2344
Transceiver_Group Primitive Calculations 2344
GRAPHmultiLineSeparator 2344
NUMDAYS 2345
NUMHOURS 2345
Transceiver_Group Peg Counts 2345
AVG16K 2345
AVG64K 2345
BSS_Release 2346
BUNDG0AVEDL 2346
BUNDG1AVEDL 2346
BUNDG2AVEDL 2346
BUNDG3AVEDL 2347
BUNDG4AVEDL 2347
CSDISCOVL 2347
DL0025JITBUFDEL 2348
DL100JITBUFDEL 2348
DL100STNLOAD 2348
DL2650JITBUFDEL 2349
DL5175JITBUFDEL 2349
DL7075STNLOAD 2349
DL7600JITBUFDEL 2350
DL7680STNLOAD 2350
DL8185STNLOAD 2350
DL8690STNLOAD 2351
DL9195STNLOAD 2351
DL9600STNLOAD 2351
DLDROPJBUF 2352
DLJITBUFAVDEL 2352
FRAG64K 2352
ID1 2353
ID2 2353
INTERCNT 2353
IPDLSENTPACK 2354
IPLOSTPACKUL 2354
IPNUMSCAN 2354
IPOVLL1 2355
IPOVLL2 2355
IPRECKBYTES 2355
IPSENTKBYTES 2356
IPULRECPACK 2356

MAX16K 2356
MAX64K 2357
MIN16K 2357
MIN64K 2357
PERLEN 2358
PSDISCOVL 2358
PSUINSBMD 2358
TG_ID 2358
TRASYNCCNT 2359
UL0025JITBUFDEL 2359
UL100JITBUFDEL 2359
UL100STNLOAD 2360
UL2650JITBUFDEL 2360
UL5175JITBUFDEL 2360
UL7075STNLOAD 2361
UL7600JITBUFDEL 2361
UL7680STNLOAD 2361
UL8185STNLOAD 2362
UL8690STNLOAD 2362
UL9195STNLOAD 2362
UL9600STNLOAD 2363
ULDROPJBUF 2363
ULJITBUFAVDEL 2363
Transcoder_Subpool Primitive Calculations 2364
GRAPHmultiLineSeparator 2364
NUMDAYS 2364
NUMHOURS 2364
Transcoder_Subpool Peg Counts 2364
PERLEN 2364
TPSUBACTR 2364
TPSUBAVTR 2365
TPSUBIDLTR 2365
TRC Primitive Calculations 2365
GRAPHmultiLineSeparator 2365
INTERVALS 2365
LocalName 2366
NUMDAYS 2366
NUMHOURS 2366
VENDORTECH 2366
TRC Peg Counts 2366
ALLOCATERATP 2366
ATERCONG 2367
AVATERTRCDEV 2367
BLATERTRCDEV 2367
BSS_RELEASE 2367
ID1_ATERTRANS 2368
PERLEN 2368
SALLOCATERATP 2368
SZATERTRCDEV 2368
SZSATERTRCDEV 2369

© Copyright IBM Corp. 2008, 2009. All Rights Reserved.

TRCNSCAN . . . 2369
TRD Primitive Calculations . . . 2369
GRAPHmultiLineSeparator . . . 2369
INTERVALS . . . 2370
LocalName . . . 2370
NUMDAYS . . . 2370
NUMHOURS . . . 2370
VENDORTECH . . . 2370
TRD Peg Counts . . . 2370
BSS_RELEASE . . . 2370
ID1_TRAPEVENT . . . 2370
PERLEN . . . 2371
TPACC . . . 2371
TPACTTR . . . 2371
TPALLOC . . . 2372
TPAVTR . . . 2372
TPCONG . . . 2372
TPCTIME . . . 2373
TPIDLTR . . . 2373
TPSYNCF . . . 2373
TPTFOEST . . . 2373
TPTFOESTATT . . . 2374
TrunkRoute Primitive Calculations . . . 2374
AnswerSeizureRatio_Percentage . . . 2374
BanswersIncomingRoute . . . 2374
BanswersOutgoingRoute . . . 2374
Circuits_Available . . . 2375
Congestion% . . . 2375
DIMENSION . . . 2375
GRAPHmultiLineSeparator . . . 2375
GROWTH . . . 2375
INTERVALS . . . 2375
INTERVALS_TRAR . . . 2375
NANSWERS_BW . . . 2376
NCALLS_BW . . . 2376
NISUPATP_BW . . . 2376
NOVERFLOW_BW . . . 2376
NRESTRICT_BW . . . 2376
NSEMIPERC_BW . . . 2376
NTRALACC_TRUNKROUTE_BW . . . 2376
NumberOfBAnswers . . . 2377
NumberOfBids . . . 2377
NUMDAYS . . . 2377
NUMHOURS . . . 2377
PercentageCongestion . . . 2377
PercentAnswerSeizeRatio . . . 2377
PercentSuccessCalls . . . 2377
Sample_Size . . . 2378
TR_Correlation . . . 2378
TR_Critical_Carried . . . 2378

TR_Critical_Offerred 2378
TR_Current_Util% 2378
TR_Est_GOS 2378
TR_Est_Lost 2379
TR_Exhaust_Date 2379
TR_Exhaust_Days 2379
TR_ExtraCirct_Req 2379
TR_Final_Util% 2379
TR_Forecast_Value1 2379
TR_Forecast_Value2 2379
TR_Forecast_Value3 2380
TR_GOS 2380
TR_N1Days_FCAST 2380
TR_N2Days_FCAST 2380
TR_N3Days_FCAST 2380
TR_PABH3 2380
TR_PABH5 2381
TR_Req_Ch 2381
TR_Traffic 2381
TR_Traffic_Off 2381
TR_Traffic_OneWay 2381
TR_Util_Offered 2381
Traffic 2381
TrafficBW 2382
TrafficInc 2382
TrafficOut 2382
TRAL_TRUNKROUTE_BW 2382
TrunkCallAttempts 2382
VENDORTECH 2382
TrunkRoute Peg Counts 2383
ACCTRAFCNTR 2383
BANS 2383
BBLOL 2383
BLKDDEVS 2384
BLOL_TRUNKROUTE 2384
ID1_TRUNKROUTE 2384
ID2_TRUNKROUTE 2385
LASTCONGCNT 2385
MSC_RELEASE 2385
NANSWERSI 2385
NANSWERSO 2386
NBBLOCACC 2386
NBIDS_TRAR 2386
NBLOCACC_TRUNKROUTE 2386
NC7DSEIZ 2387
NCALLSI 2387
NCALLSO 2387
NCONGBAS 2388
NCONGTRANS 2388
NDEV_TRAR 2388
NDEV_TRUNKROUTE 2389

© Copyright IBM Corp. 2008, 2009. All Rights Reserved.

NDSEIZ 2389
NISUPATPI 2389
NISUPATPO 2390
NOSEIZ_TRUNKROUTE 2390
NOVERFLOWI 2390
NOVERFLOWO 2390
NRESTRICTI 2391
NRESTRICTO 2391
NSCAN_TRUNKROUTE 2391
NSEMIPERCI 2392
NSEMIPERCO 2392
NTRALACCI_TRUNKROUTE 2392
NTRALACCO_TRUNKROUTE 2393
PERLEN 2393
PERLEN_TRAR 2393
RESTRDEVCNT 2393
SUMTRAFLVL 2393
THROUGHRTECNT 2394
TRALI_TRUNKROUTE 2394
TRALO_TRUNKROUTE 2394
TRK_TYPE 2395
UNSUC_BIDS 2395
VLR Primitive Calculations 2395
GRAPHmultiLineSeparator 2395
INTERVALS 2395
NUMDAYS 2396
NUMHOURS 2396
VENDORTECH 2396
VLR Peg Counts 2396
MSC_RELEASE 2396
NACTIVSS 2396
NACTTRAC 2397
NBEGACT 2397
NCANCEL 2397
NDEACTRA 2398
NDEACTSS 2398
NDELETE 2398
NERASESS 2398
NINSERT 2399
NINTRRSS 2399
NPROROA 2399
NPRSINFO 2400
NPURGEMS 2400
NPUSSDAR 2400
NPUSSRQR 2401
NREGPASS 2401
NREGTRSS 2401
NUPDLOC 2402
NUSSDNTS 2402
NUSSDRQS 2402
NVLRSAVTOT 2403

Updated: 2009-07-22

NVLRSCSDTOT 2403
NVLRSECDSUCC 2403
NVLRSECDTOT 2403
PERLEN 2404

13 OSSRC Traffic Entities 2405

14 OSSRC Traffic Fields 2407
FTPService Primitive Calculations 2407
GRAPHmultiLineSeparator 2407
NUMDAYS 2407
NUMHOURS 2407
FTPService Peg Counts 2407
controlPortId 2407
dataPortId 2408
directoryPath 2408
hostname 2408
ipAddress 2409
name 2409
serviceSecurityState 2409
System 2410
type 2410
Group Primitive Calculations 2410
GRAPHmultiLineSeparator 2410
NUMDAYS 2411
NUMHOURS 2411
Group Peg Counts 2411
exists_optional 2411
groupType 2411
userLabel 2411
NE Primitive Calculations 2411
GRAPHmultiLineSeparator 2411
NUMDAYS 2411
NUMHOURS 2412
NE Peg Counts 2412
associatedNodes 2412
associatedSite 2412
AssociationType 2413
boardId 2413
bookname 2413
browser 2414
browserURL 2414
connectionStatus 2414
emUrl 2415
FROM_FDN 2415
ftpBackupStore 2415
ftpLicenseKeyStore 2416
ftpSwStore 2416
hostname 2416
ipAddress 2417
isManaged 2417

© Copyright IBM Corp. 2008, 2009. All Rights Reserved.

IubInfoRbsId 2417
IubInfoRncModuleId 2418
ManagedElementId 2418
managedElementType 2418
ManagedServiceAvailability 2418
namingPort 2419
namingUrl 2419
NeadAttach 2419
neMIMVersion 2420
nodeSecurityState 2420
nodeVersion 2420
platformVersion 2421
primaryType 2421
RbsInfo_rbsType 2421
RbsTnInfoAtmPort 2422
RbsTnInfoExternalVPI 2422
sourceType 2422
swVersion 2423
TO_FDN 2423
userDefinedState 2423
vendorName 2424
version 2424
NE_Sub Primitive Calculations 2424
GRAPHmultiLineSeparator 2424
NUMDAYS 2424
NUMHOURS 2425
NE_Sub Peg Counts 2425
associatedNodes 2425
associatedSite 2425
AssociationType 2426
boardId 2426
bookname 2426
browser 2427
browserURL 2427
connectionStatus 2427
emUrl 2428
FROM_FDN 2428
ftpBackupStore 2428
ftpLicenseKeyStore 2429
ftpSwStore 2429
hostname 2429
ipAddress 2430
isManaged 2430
IubInfoRbsId 2430
IubInfoRncModuleId 2431
ManagedElementId 2431
managedElementType 2431
ManagedServiceAvailability 2431
namingPort 2432
namingUrl 2432
NeadAttach 2432

Updated: 2009-07-22

neMIMVersion 2433
nodeSecurityState 2433
nodeVersion 2433
platformVersion 2434
primaryType 2434
RbsInfo_rbsType 2434
RbsTnInfoAtmPort 2435
RbsTnInfoExternalVPI 2435
sourceType 2435
swVersion 2436
TO_FDN 2436
userDefinedState 2436
vendorName 2437
version 2437
OSSRC Primitive Calculations 2437
GRAPHmultiLineSeparator 2437
NUMDAYS 2437
NUMHOURS 2438
OSSRC Peg Counts 2438
importVersion 2438
System_OSSRC 2438
version 2438
Protocol Primitive Calculations 2438
GRAPHmultiLineSeparator 2438
NUMDAYS 2438
NUMHOURS 2439
Protocol Peg Counts 2439
alarmIRPAgentVersion 2439
alarmIRPNamingContext 2439
ATList 2439
authenticationMethod 2440
communityString 2440
context 2440
encryptionMethod 2441
ftpArea 2441
ftpRoot 2441
namingPort 2442
namingUrl 2442
notificationIRPAgentVersion 2442
notificationIRPNamingContext 2443
number_id 2443
port 2443
protocolType 2444
protocolVersion 2444
securedFtpRoot 2444
securityName 2445
Protocol_Sub Primitive Calculations 2445
GRAPHmultiLineSeparator 2445
NUMDAYS 2445
NUMHOURS 2445

© Copyright IBM Corp. 2008, 2009. All Rights Reserved.

Protocol_Sub Peg Counts . . . 2445
alarmIRPAgentVersion . . . 2446
alarmIRPNamingContext . . . 2446
ATList . . . 2446
authenticationMethod . . . 2447
communityString . . . 2447
context . . . 2447
encryptionMethod . . . 2447
ftpArea . . . 2448
ftpRoot . . . 2448
namingPort . . . 2448
namingUrl . . . 2449
notificationIRPAgentVersion . . . 2449
notificationIRPNamingContext . . . 2449
number_id . . . 2450
port . . . 2450
protocolType . . . 2450
protocolVersion . . . 2451
securedFtpRoot . . . 2451
securityName . . . 2451
Site Primitive Calculations . . . 2452
GRAPHmultiLineSeparator . . . 2452
NUMDAYS . . . 2452
NUMHOURS . . . 2452
Site Peg Counts . . . 2452
altitude . . . 2452
datum . . . 2453
freeText . . . 2453
latitude . . . 2453
location . . . 2454
longitude . . . 2454
timeZone . . . 2454
userLabel . . . 2455
SubNetwork Primitive Calculations . . . 2455
GRAPHmultiLineSeparator . . . 2455
NUMDAYS . . . 2455
NUMHOURS . . . 2455
SubNetwork Peg Counts . . . 2455
exists_optional . . . 2456
networkType . . . 2456
UserLabel . . . 2456
System Primitive Calculations . . . 2457
GRAPHmultiLineSeparator . . . 2457
NUMDAYS . . . 2457
NUMHOURS . . . 2457

15 RNC Traffic Entities . . . 2459

16 RNC Traffic Fields . . . 2467
Aal0TpVccTp_NodeB Primitive Calculations . . . 2467
GRAPHmultiLineSeparator . . . 2467

NUMDAYS 2467
NUMHOURS 2467
Aal0TpVccTp_NodeB Peg Counts 2467
PERLENSEC 2467
PERLENSEC_K 2468
pmBwErrBlocks 2468
pmBwLostCells 2468
pmBwMissinsCells 2469
pmFwErrBlocks 2469
pmFwLostCells 2469
pmFwMissinsCells 2470
pmLostBrCells 2470
pmLostFpmCells 2470
Aal0TpVccTp_RNC Primitive Calculations 2471
GRAPHmultiLineSeparator 2471
NUMDAYS 2471
NUMHOURS 2471
Aal0TpVccTp_RNC Peg Counts 2471
PERLENSEC 2471
PERLENSEC_K 2472
pmBwErrBlocks 2472
pmBwLostCells 2472
pmBwMissinsCells 2473
pmFwErrBlocks 2473
pmFwLostCells 2473
pmFwMissinsCells 2473
pmLostBrCells 2474
pmLostFpmCells 2474
Aal1TpVccTp_NodeB Primitive Calculations 2474
GRAPHmultiLineSeparator 2474
NUMDAYS 2475
NUMHOURS 2475
Aal1TpVccTp_NodeB Peg Counts 2475
NodeB_RELEASE 2475
PERLENSEC 2475
PERLENSEC_K 2476
pmBwErrBlocks 2476
pmBwLostCells 2476
pmBwMissinsCells 2476
pmFwErrBlocks 2477
pmFwLostCells 2477
pmFwMissinsCells 2477
pmLostBrCells 2478
pmLostFpmCells 2478
Aal2Ap_NodeB Primitive Calculations 2478
Aal2_SuccAll_NodeB 2478
Aal2_UnSuccIn_NodeB 2479
Aal2_UnSuccOut_NodeB 2479
GRAPHmultiLineSeparator 2479
NUMDAYS 2479

© Copyright IBM Corp. 2008, 2009. All Rights Reserved.

NUMHOURS 2479
Aal2Ap_NodeB Peg Counts 2479
NodeB_RELEASE 2479
PERLENSEC 2480
PERLENSEC_K 2480
pmExisOrigConns 2480
pmExisTermConns 2481
pmExisTransConns 2481
pmSuccInConnsRemote 2481
pmSuccInConnsRemoteQosClassA 2482
pmSuccInConnsRemoteQosClassB 2482
pmSuccInConnsRemoteQosClassC 2482
pmSuccInConnsRemoteQosClassD 2483
pmSuccOutConnsRemote 2483
pmSuccOutConnsRemoteQosClassA 2483
pmSuccOutConnsRemoteQosClassB 2484
pmSuccOutConnsRemoteQosClassC 2484
pmSuccOutConnsRemoteQosClassD 2484
pmUnRecMessages 2485
pmUnRecParams 2485
pmUnSuccInConnsLocal 2485
pmUnSuccInConnsLocalQosClassA 2486
pmUnSuccInConnsLocalQosClassB 2486
pmUnSuccInConnsLocalQosClassC 2486
pmUnSuccInConnsLocalQosClassD 2487
pmUnSuccInConnsRemote 2487
pmUnSuccInConnsRemoteQosClassA 2487
pmUnSuccInConnsRemoteQosClassB 2488
pmUnSuccInConnsRemoteQosClassC 2488
pmUnSuccInConnsRemoteQosClassD 2488
pmUnSuccOutConnsLocal 2489
pmUnSuccOutConnsLocalQosClassA 2489
pmUnSuccOutConnsLocalQosClassB 2489
pmUnSuccOutConnsLocalQosClassC 2490
pmUnSuccOutConnsLocalQosClassD 2490
pmUnSuccOutConnsRemote 2491
pmUnSuccOutConnsRemoteQosClassA 2491
pmUnSuccOutConnsRemoteQosClassB 2491
pmUnSuccOutConnsRemoteQosClassC 2492
pmUnSuccOutConnsRemoteQosClassD 2492
Aal2Ap_RNC Primitive Calculations 2492
Aal2_SuccAll_RNC 2492
Aal2_UnSuccIn_RNC 2492
Aal2_UnSuccOut_RNC 2493
GRAPHmultiLineSeparator 2493
NUMDAYS 2493
NUMHOURS 2493
Aal2Ap_RNC Peg Counts 2493
PERLENSEC 2493
PERLENSEC_K 2494

pmExisOrigConns 2494
pmExisTermConns 2494
pmExisTransConns 2495
pmSuccInConnsRemote 2495
pmSuccInConnsRemoteQosClassA 2495
pmSuccInConnsRemoteQosClassB 2496
pmSuccInConnsRemoteQosClassC 2496
pmSuccInConnsRemoteQosClassD 2496
pmSuccOutConnsRemote 2497
pmSuccOutConnsRemoteQosClassA 2497
pmSuccOutConnsRemoteQosClassB 2497
pmSuccOutConnsRemoteQosClassC 2498
pmSuccOutConnsRemoteQosClassD 2498
pmUnRecMessages 2498
pmUnRecParams 2499
pmUnSuccInConnsLocal 2499
pmUnSuccInConnsLocalQosClassA 2499
pmUnSuccInConnsLocalQosClassB 2500
pmUnSuccInConnsLocalQosClassC 2500
pmUnSuccInConnsLocalQosClassD 2500
pmUnSuccInConnsRemote 2501
pmUnSuccInConnsRemoteQosClassA 2501
pmUnSuccInConnsRemoteQosClassB 2501
pmUnSuccInConnsRemoteQosClassC 2502
pmUnSuccInConnsRemoteQosClassD 2502
pmUnSuccOutConnsLocal 2502
pmUnSuccOutConnsLocalQosClassA 2503
pmUnSuccOutConnsLocalQosClassB 2503
pmUnSuccOutConnsLocalQosClassC 2503
pmUnSuccOutConnsLocalQosClassD 2504
pmUnSuccOutConnsRemote 2504
pmUnSuccOutConnsRemoteQosClassA 2504
pmUnSuccOutConnsRemoteQosClassB 2505
pmUnSuccOutConnsRemoteQosClassC 2505
pmUnSuccOutConnsRemoteQosClassD 2505
RNC_RELEASE 2506
Aal2PathVccTp_NodeB Primitive Calculations 2506
GRAPHmultiLineSeparator 2506
NUMDAYS 2506
NUMHOURS 2506
Aal2PathVccTp_NodeB Peg Counts 2506
PERLENSEC 2507
PERLENSEC_K 2507
pmBwErrBlocks 2507
pmBwLostCells 2508
pmBwMissinsCells 2508
pmDiscardedEgressCpsPackets 2508
pmEgressCpsPackets 2508
pmFwErrBlocks 2509
pmFwLostCells 2509
pmFwMissinsCells 2509

© Copyright IBM Corp. 2008, 2009. All Rights Reserved.

pmIngressCpsPackets . . . 2510
pmLostBrCells . . . 2510
pmLostFpmCells . . . 2510
Aal2PathVccTp_RNC Primitive Calculations . . . 2511
GRAPHmultiLineSeparator . . . 2511
NUMDAYS . . . 2511
NUMHOURS . . . 2511
Aal2PathVccTp_RNC Peg Counts . . . 2511
PERLENSEC . . . 2511
PERLENSEC_K . . . 2512
pmBwErrBlocks . . . 2512
pmBwLostCells . . . 2512
pmBwMissinsCells . . . 2513
pmDiscardedEgressCpsPackets . . . 2513
pmEgressCpsPackets . . . 2513
pmFwErrBlocks . . . 2513
pmFwLostCells . . . 2514
pmFwMissinsCells . . . 2514
pmIngressCpsPackets . . . 2514
pmLostBrCells . . . 2515
pmLostFpmCells . . . 2515
Aal2Sp_NodeB Primitive Calculations . . . 2515
GRAPHmultiLineSeparator . . . 2515
NUMDAYS . . . 2516
NUMHOURS . . . 2516
Aal2Sp_NodeB Peg Counts . . . 2516
NodeB_RELEASE . . . 2516
PERLENSEC . . . 2516
PERLENSEC_K . . . 2516
pmUnsuccessfulConnsInternal . . . 2517
Aal2Sp_RNC Primitive Calculations . . . 2517
GRAPHmultiLineSeparator . . . 2517
NUMDAYS . . . 2517
NUMHOURS . . . 2517
Aal2Sp_RNC Peg Counts . . . 2518
PERLENSEC . . . 2518
PERLENSEC_K . . . 2518
pmUnsuccessfulConnsInternal . . . 2518
RNC_RELEASE . . . 2519
Aal5TpVccTp_NodeB Primitive Calculations . . . 2519
GRAPHmultiLineSeparator . . . 2519
NUMDAYS . . . 2519
NUMHOURS . . . 2519
Aal5TpVccTp_NodeB Peg Counts . . . 2519
PERLENSEC . . . 2520
PERLENSEC_K . . . 2520
pmBwErrBlocks . . . 2520
pmBwLostCells . . . 2521
pmBwMissinsCells . . . 2521
pmFwErrBlocks . . . 2521

pmFwLostCells 2521
pmFwMissinsCells 2522
pmLostBrCells 2522
pmLostFpmCells 2522
Aal5TpVccTp_RNC Primitive Calculations 2523
GRAPHmultiLineSeparator 2523
NUMDAYS 2523
NUMHOURS 2523
Aal5TpVccTp_RNC Peg Counts 2523
PERLENSEC 2523
PERLENSEC_K 2524
pmBwErrBlocks 2524
pmBwLostCells 2524
pmBwMissinsCells 2525
pmFwErrBlocks 2525
pmFwLostCells 2525
pmFwMissinsCells 2526
pmLostBrCells 2526
pmLostFpmCells 2526
Aich Primitive Calculations 2526
GRAPHmultiLineSeparator 2527
NUMDAYS 2527
NUMHOURS 2527
Aich Peg Counts 2527
NodeB_RELEASE 2527
PERLENSEC 2527
PERLENSEC_K 2528
pmNegativeMessages 2528
pmPositiveMessages 2528
AmrService Primitive Calculations 2529
GRAPHmultiLineSeparator 2529
NUMDAYS 2529
NUMHOURS 2529
p_Seizures_Sucess_Rate 2529
AmrService Peg Counts 2529
PERLENSEC 2529
pmForcedRelease 2530
pmNormalRelease 2530
pmTotalSeizures 2530
pmUnsuccSeizures 2531
RNC_RELEASE 2531
AntennaBranch Primitive Calculations 2531
GRAPHmultiLineSeparator 2531
NUMDAYS 2531
NUMHOURS 2532
AntennaBranch Peg Counts 2532
NodeB_RELEASE 2532
PERLENSEC 2532
PERLENSEC_K 2532
pmNoOfPowLimSlots 2533

© Copyright IBM Corp. 2008, 2009. All Rights Reserved.

AtmPort_NodeB Primitive Calculations 2533
Avr_CellRate_Recieved_AtmPort_NodeB 2533
Avr_CellRate_Transmitted_AtmPort_NodeB 2533
GRAPHmultiLineSeparator 2533
NUMDAYS 2534
NUMHOURS 2534
AtmPort_NodeB Peg Counts 2534
NodeB_RELEASE 2534
PERLENSEC 2534
PERLENSEC_K 2534
pmReceivedAtmCells 2535
pmSecondsWithUnexp 2535
pmTransmittedAtmCells 2535
AtmPort_RNC Primitive Calculations 2536
Avr_CellRate_Recieved_AtmPort_RNC 2536
Avr_CellRate_Transmitted_AtmPort_RNC 2536
GRAPHmultiLineSeparator 2536
NUMDAYS 2536
NUMHOURS 2536
AtmPort_RNC Peg Counts 2537
PERLENSEC 2537
PERLENSEC_K 2537
pmReceivedAtmCells 2537
pmSecondsWithUnexp 2538
pmTransmittedAtmCells 2538
RNC_RELEASE 2538
Carrier Primitive Calculations 2538
GRAPHmultiLineSeparator 2539
k_CARR_PWR_DL_AVE 2539
NUMDAYS 2540
NUMHOURS 2540
pmAverageRssiP5MD_00 2540
pmAverageRssiP5MD_01 2540
pmAverageRssiP5MD_02 2541
pmAverageRssiP5MD_03 2541
pmAverageRssiP5MD_04 2541
pmAverageRssiP5MD_05 2541
pmAverageRssiP5MD_06 2541
pmAverageRssiP5MD_07 2542
pmAverageRssiP5MD_08 2542
pmAverageRssiP5MD_09 2542
pmAverageRssiP5MD_10 2542
pmAverageRssiP5MD_11 2542
pmAverageRssiP5MD_12 2543
pmAverageRssiP5MD_13 2543
pmAverageRssiP5MD_14 2543
pmAverageRssiP5MD_15 2543
pmAverageRssiP5MD_16 2543
pmAverageRssiP5MD_17 2544
pmAverageRssiP5MD_18 2544

pmAverageRssiP5MD_19 2544
pmAverageRssiP5MD_20 2544
pmAverageRssiP5MD_21 2544
pmAverageRssiP5MD_22 2545
pmAverageRssiP5MD_23 2545
pmAverageRssiP5MD_24 2545
pmAverageRssiP5MD_25 2545
pmAverageRssiP5MD_26 2545
pmAverageRssiP5MD_27 2546
pmAverageRssiP5MD_28 2546
pmAverageRssiP5MD_29 2546
pmAverageRssiP5MD_30 2546
pmAverageRssiP5MD_31 2546
pmAverageRssiP5MD_32 2547
pmAverageRssiP5MD_33 2547
pmAverageRssiP5MD_34 2547
pmAverageRssiP5MD_35 2547
pmAverageRssiP5MD_36 2547
pmAverageRssiP5MD_37 2548
pmAverageRssiP5MD_38 2548
pmAverageRssiP5MD_39 2548
pmAverageRssiP5MD_40 2548
pmAverageRssiP5MD_41 2548
pmAverageRssiP5MD_42 2549
pmAverageRssiP5MD_43 2549
pmAverageRssiP5MD_44 2549
pmAverageRssiP5MD_45 2549
pmAverageRssiP5MD_46 2549
pmAverageRssiP5MD_47 2550
pmAverageRssiP5MD_48 2550
pmAverageRssiP5MD_49 2550
pmAverageRssiP5MD_50 2550
pmAverageRssiP5MD_51 2550
pmAverageRssiP5MD_52 2551
pmAverageRssiP5MD_53 2551
pmAverageRssiP5MD_54 2551
pmAverageRssiP5MD_55 2551
pmAverageRssiP5MD_56 2551
pmAverageRssiP5MD_57 2552
pmAverageRssiP5MD_58 2552
pmAverageRssiP5MD_59 2552
pmAverageRssiP5MD_60 2552
pmTxCarrierPowerP5MD_02 2552
pmTxCarrierPowerP5MD_03 2552
pmTxCarrierPowerP5MD_04 2553
pmTxCarrierPowerP5MD_05 2553
pmTxCarrierPowerP5MD_06 2553
pmTxCarrierPowerP5MD_07 2553
pmTxCarrierPowerP5MD_08 2553
pmTxCarrierPowerP5MD_09 2553
pmTxCarrierPowerP5MD_10 2554

© Copyright IBM Corp. 2008, 2009. All Rights Reserved.

pmTxCarrierPowerP5MD_11 2554
pmTxCarrierPowerP5MD_12 2554
pmTxCarrierPowerP5MD_13 2554
pmTxCarrierPowerP5MD_14 2554
pmTxCarrierPowerP5MD_15 2554
pmTxCarrierPowerP5MD_16 2555
pmTxCarrierPowerP5MD_17 2555
pmTxCarrierPowerP5MD_18 2555
pmTxCarrierPowerP5MD_19 2555
pmTxCarrierPowerP5MD_20 2555
pmTxCarrierPowerP5MD_21 2555
pmTxCarrierPowerP5MD_22 2556
pmTxCarrierPowerP5MD_23 2556
pmTxCarrierPowerP5MD_24 2556
pmTxCarrierPowerP5MD_25 2556
pmTxCarrierPowerP5MD_26 2556
pmTxCarrierPowerP5MD_27 2556
pmTxCarrierPowerP5MD_28 2557
pmTxCarrierPowerP5MD_29 2557
pmTxCarrierPowerP5MD_30 2557
pmTxCarrierPowerP5MD_31 2557
pmTxCarrierPowerP5MD_32 2557
pmTxCarrierPowerP5MD_33 2557
pmTxCarrierPowerP5MD_34 2558
pmTxCarrierPowerP5MD_35 2558
pmTxCarrierPowerP5MD_36 2558
pmTxCarrierPowerP5MD_37 2558
pmTxCarrierPowerP5MD_38 2558
pmTxCarrierPowerP5MD_39 2558
pmTxCarrierPowerP5MD_40 2559
pmTxCarrierPowerP5MD_41 2559
pmTxCarrierPowerP5MD_42 2559
pmTxCarrierPowerP5MD_43 2559
pmTxCarrierPowerP5MD_44 2559
pmTxCarrierPowerP5MD_45 2559
pmTxCarrierPowerP5MD_46 2560
pmTxCarrierPowerP5MD_47 2560
pmTxCarrierPowerP5MD_48 2560
pmTxCarrierPowerP5MD_49 2560
pmTxCarrierPowerP5MD_50 2560
Carrier Peg Counts 2560
NodeB_nesw 2561
NodeB_RELEASE 2561
PERLENSEC 2561
PERLENSEC_K 2561
pmAverageRssi_00 2562
pmAverageRssi_01 2562
pmAverageRssi_02 2562
pmAverageRssi_03 2563
pmAverageRssi_04 2563
pmAverageRssi_05 2563

pmAverageRssi_06 2564
pmAverageRssi_07 2564
pmAverageRssi_08 2564
pmAverageRssi_09 2564
pmAverageRssi_10 2565
pmAverageRssi_11 2565
pmAverageRssi_12 2565
pmAverageRssi_13 2566
pmAverageRssi_14 2566
pmAverageRssi_15 2566
pmAverageRssi_16 2567
pmAverageRssi_17 2567
pmAverageRssi_18 2567
pmAverageRssi_19 2568
pmAverageRssi_20 2568
pmAverageRssi_21 2568
pmAverageRssi_22 2568
pmAverageRssi_23 2569
pmAverageRssi_24 2569
pmAverageRssi_25 2569
pmAverageRssi_26 2570
pmAverageRssi_27 2570
pmAverageRssi_28 2570
pmAverageRssi_29 2571
pmAverageRssi_30 2571
pmAverageRssi_31 2571
pmAverageRssi_32 2572
pmAverageRssi_33 2572
pmAverageRssi_34 2572
pmAverageRssi_35 2572
pmAverageRssi_36 2573
pmAverageRssi_37 2573
pmAverageRssi_38 2573
pmAverageRssi_39 2574
pmAverageRssi_40 2574
pmAverageRssi_41 2574
pmAverageRssi_42 2575
pmAverageRssi_43 2575
pmAverageRssi_44 2575
pmAverageRssi_45 2576
pmAverageRssi_46 2576
pmAverageRssi_47 2576
pmAverageRssi_48 2576
pmAverageRssi_49 2577
pmAverageRssi_50 2577
pmAverageRssi_51 2577
pmAverageRssi_52 2578
pmAverageRssi_53 2578
pmAverageRssi_54 2578
pmAverageRssi_55 2579
pmAverageRssi_56 2579

© Copyright IBM Corp. 2008, 2009. All Rights Reserved.

pmAverageRssi_57 2579
pmAverageRssi_58 2580
pmAverageRssi_59 2580
pmAverageRssi_60 2580
pmAverageRssi_61 2580
pmAverageRssiP5MD_61 2581
pmAverageRssiP5MD_62 2581
pmAverageRssiP5MD_63 2582
pmAverageRssiP5MD_64 2582
pmTransmittedCarrierPowerP6_00 2582
pmTransmittedCarrierPowerP6_01 2583
pmTransmittedCarrierPowerP6_02 2583
pmTransmittedCarrierPowerP6_03 2583
pmTransmittedCarrierPowerP6_04 2584
pmTransmittedCarrierPowerP6_05 2584
pmTransmittedCarrierPowerP6_06 2584
pmTransmittedCarrierPowerP6_07 2585
pmTransmittedCarrierPowerP6_08 2585
pmTransmittedCarrierPowerP6_09 2585
pmTransmittedCarrierPowerP6_10 2586
pmTransmittedCarrierPowerP6_11 2586
pmTransmittedCarrierPowerP6_12 2586
pmTransmittedCarrierPowerP6_13 2587
pmTransmittedCarrierPowerP6_14 2587
pmTransmittedCarrierPowerP6_15 2587
pmTransmittedCarrierPowerP6_16 2588
pmTransmittedCarrierPowerP6_17 2588
pmTransmittedCarrierPowerP6_18 2588
pmTransmittedCarrierPowerP6_19 2589
pmTransmittedCarrierPowerP6_20 2589
pmTransmittedCarrierPowerP6_21 2589
pmTransmittedCarrierPowerP6_22 2590
pmTransmittedCarrierPowerP6_23 2590
pmTransmittedCarrierPowerP6_24 2590
pmTransmittedCarrierPowerP6_25 2591
pmTransmittedCarrierPowerP6_26 2591
pmTransmittedCarrierPowerP6_27 2591
pmTransmittedCarrierPowerP6_28 2592
pmTransmittedCarrierPowerP6_29 2592
pmTransmittedCarrierPowerP6_30 2592
pmTransmittedCarrierPowerP6_31 2593
pmTransmittedCarrierPowerP6_32 2593
pmTransmittedCarrierPowerP6_33 2593
pmTransmittedCarrierPowerP6_34 2594
pmTransmittedCarrierPowerP6_35 2594
pmTransmittedCarrierPowerP6_36 2594
pmTransmittedCarrierPowerP6_37 2595
pmTransmittedCarrierPowerP6_38 2595
pmTransmittedCarrierPowerP6_39 2595
pmTransmittedCarrierPowerP6_40 2596
pmTransmittedCarrierPowerP6_41 2596

Updated: 2009-07-22

pmTransmittedCarrierPowerP6_42 2596
pmTransmittedCarrierPowerP6_43 2597
pmTransmittedCarrierPowerP6_44 2597
pmTransmittedCarrierPowerP6_45 2597
pmTransmittedCarrierPowerP6_46 2598
pmTransmittedCarrierPowerP6_47 2598
pmTransmittedCarrierPowerP6_48 2598
pmTransmittedCarrierPowerP6_49 2599
pmTransmittedCarrierPowerP6_50 2599
pmTransmittedCarrierPowerP6_51 2599
pmTXCarPwr_000 2600
pmTXCarPwr_001 2600
pmTXCarPwr_002 2600
pmTXCarPwr_003 2601
pmTXCarPwr_004 2601
pmTXCarPwr_005 2601
pmTXCarPwr_006 2602
pmTXCarPwr_007 2602
pmTXCarPwr_008 2602
pmTXCarPwr_009 2602
pmTXCarPwr_010 2603
pmTXCarPwr_011 2603
pmTXCarPwr_012 2603
pmTXCarPwr_013 2604
pmTXCarPwr_014 2604
pmTXCarPwr_015 2604
pmTXCarPwr_016 2605
pmTXCarPwr_017 2605
pmTXCarPwr_018 2605
pmTXCarPwr_019 2606
pmTXCarPwr_020 2606
pmTXCarPwr_021 2606
pmTXCarPwr_022 2607
pmTXCarPwr_023 2607
pmTXCarPwr_024 2607
pmTXCarPwr_025 2608
pmTXCarPwr_026 2608
pmTXCarPwr_027 2608
pmTXCarPwr_028 2609
pmTXCarPwr_029 2609
pmTXCarPwr_030 2609
pmTXCarPwr_031 2610
pmTXCarPwr_032 2610
pmTXCarPwr_033 2610
pmTXCarPwr_034 2611
pmTXCarPwr_035 2611
pmTXCarPwr_036 2611
pmTXCarPwr_037 2612
pmTXCarPwr_038 2612
pmTXCarPwr_039 2612
pmTXCarPwr_040 2613

© Copyright IBM Corp. 2008, 2009. All Rights Reserved.

pmTXCarPwr_041 2613
pmTXCarPwr_042 2613
pmTXCarPwr_043 2614
pmTXCarPwr_044 2614
pmTXCarPwr_045 2614
pmTXCarPwr_046 2615
pmTXCarPwr_047 2615
pmTXCarPwr_048 2615
pmTXCarPwr_049 2616
pmTXCarPwr_050 2616
pmTXCarPwr_051 2616
pmTXCarPwr_052 2617
pmTXCarPwr_053 2617
pmTXCarPwr_054 2617
pmTXCarPwr_055 2618
pmTXCarPwr_056 2618
pmTXCarPwr_057 2618
pmTXCarPwr_058 2619
pmTXCarPwr_059 2619
pmTXCarPwr_060 2619
pmTXCarPwr_061 2620
pmTXCarPwr_062 2620
pmTXCarPwr_063 2620
pmTXCarPwr_064 2621
pmTXCarPwr_065 2621
pmTXCarPwr_066 2621
pmTXCarPwr_067 2622
pmTXCarPwr_068 2622
pmTXCarPwr_069 2622
pmTXCarPwr_070 2623
pmTXCarPwr_071 2623
pmTXCarPwr_072 2623
pmTXCarPwr_073 2624
pmTXCarPwr_074 2624
pmTXCarPwr_075 2624
pmTXCarPwr_076 2625
pmTXCarPwr_077 2625
pmTXCarPwr_078 2625
pmTXCarPwr_079 2626
pmTXCarPwr_080 2626
pmTXCarPwr_081 2626
pmTXCarPwr_082 2627
pmTXCarPwr_083 2627
pmTXCarPwr_084 2627
pmTXCarPwr_085 2628
pmTXCarPwr_086 2628
pmTXCarPwr_087 2628
pmTXCarPwr_088 2629
pmTXCarPwr_089 2629
pmTXCarPwr_090 2629
pmTXCarPwr_091 2630

pmTXCarPwr_092 2630
pmTXCarPwr_093 2630
pmTXCarPwr_094 2631
pmTXCarPwr_095 2631
pmTXCarPwr_096 2631
pmTXCarPwr_097 2632
pmTXCarPwr_098 2632
pmTXCarPwr_099 2632
pmTXCarPwr_100 2633
pmTXCarPwr_101 2633
pmTXCarPwr_102 2633
pmTxCarrierPowerP5MD_00 2634
pmTxCarrierPowerP5MD_01 2634
pmTxCarrierPowerP5MD_51 2634
CcDevice Primitive Calculations 2635
GRAPHmultiLineSeparator 2635
NUMDAYS 2635
NUMHOURS 2635
CcDevice Peg Counts 2635
PERLENSEC 2635
PERLENSEC_K 2635
pmSamplesMeasuredCcSpLoad 2636
pmSumMeasuredCcSpLoad 2636
CcDevice_NodeB Primitive Calculations 2636
GRAPHmultiLineSeparator 2637
NUMDAYS 2637
NUMHOURS 2637
CcDevice_NodeB Peg Counts 2637
PERLENSEC 2637
PERLENSEC_K 2637
pmSamplesMeasuredCcSpLoad 2638
pmSumMeasuredCcSpLoad 2638
RNC_RELEASE 2638
CcDevice_RNC Primitive Calculations 2639
GRAPHmultiLineSeparator 2639
NUMDAYS 2639
NUMHOURS 2639
CcDevice_RNC Peg Counts 2639
PERLENSEC 2639
PERLENSEC_K 2640
pmSamplesMeasuredCcSpLoad 2640
pmSumMeasuredCcSpLoad 2640
RNC_RELEASE 2641
CnOperator Primitive Calculations 2641
GRAPHmultiLineSeparator 2641
NUMDAYS 2641
NUMHOURS 2641
ContinuityCheckService Primitive Calculations 2641
GRAPHmultiLineSeparator 2641
NUMDAYS 2641

© Copyright IBM Corp. 2008, 2009. All Rights Reserved.

NUMHOURS 2642
ContinuityCheckService Peg Counts 2642
PERLENSEC 2642
pmForcedRelease 2642
pmNormalRelease 2642
RNC_RELEASE 2643
CsdDigitalService Primitive Calculations 2643
GRAPHmultiLineSeparator 2643
NUMDAYS 2643
NUMHOURS 2643
p_GSM_FTM_connection_reservation_success 2644
p_GSM_UDI_connection_reservation_success 2644
p_Originating_GSM_modem_connection_success 2644
p_Originating_WCDMA_modem_connection_success 2644
p_Seizures_Sucess_Rate 2644
p_Terminating_GSM_modem_connection_success 2644
p_Terminating_WCDMA_modem_connection_success 2645
p_WCDMA_FTM_connection_reservation_success 2645
p_WCDMA_UDI_connection_reservation_success 2645
CsdDigitalService Peg Counts 2645
PERLENSEC 2645
pmForcedRelease 2645
pmFtmFail 2646
pmFtmFailGsm 2646
pmFtmSucc 2646
pmFtmSuccGsm 2647
pmModemOFail 2647
pmModemOFailGsm 2647
pmModemOSucc 2648
pmModemOSuccGsm 2648
pmModemTFail 2648
pmModemTFailGsm 2649
pmModemTSuccGsm 2649
pmNormalRelease 2649
pmNumFtm 2650
pmNumFtmGsm 2650
pmNumModemO 2650
pmNumModemOGsm 2650
pmNumModemT 2651
pmNumModemTGsm 2651
pmNumUdi 2651
pmNumUdiGsm 2652
pmTotalSeizures 2652
pmUdiFail 2652
pmUdiFailGsm 2653
pmUdiSucc 2653
pmUdiSuccGsm 2653
pmUnsuccSeizures 2654
RNC_RELEASE 2654
CsdGsmFhService Primitive Calculations 2654

GRAPHmultiLineSeparator 2654
NUMDAYS 2654
NUMHOURS 2655
p_Seizures_Sucess_Rate 2655
CsdGsmFhService Peg Counts 2655
PERLENSEC 2655
pmBusyDevices 2655
pmForcedRelease 2656
pmNormalRelease 2656
pmTotalSeizures 2656
pmUnsuccSeizures 2657
RNC_RELEASE 2657
CsdModemService Primitive Calculations 2657
GRAPHmultiLineSeparator 2657
GSM_modem_connections 2657
NUMDAYS 2658
NUMHOURS 2658
p_Device_Service_reservation_success 2658
p_Seizures_Sucess_Rate 2658
CsdModemService Peg Counts 2658
PERLENSEC 2658
pmAsyncNonTranModWcdma 2659
pmAsyncNonTransModemGsm 2659
pmAsyncNonTransModemWcdma 2659
pmAsyncTransModemGsm 2659
pmForcedRelease 2660
pmNormalRelease 2660
pmSyncTransModemGsm 2660
pmTotalSeizures 2661
pmUnsuccSeizures 2661
pmV21 2661
pmV21Gsm 2662
pmV22 2662
pmV22bis 2662
pmV22bisGsm 2663
pmV22Gsm 2663
pmV32 2663
pmV32Gsm 2663
pmV34 2664
pmV34Gsm 2664
pmV90 2664
pmV90Gsm 2665
RNC_RELEASE 2665
DcDevice Primitive Calculations 2665
GRAPHmultiLineSeparator 2665
NUMDAYS 2666
NUMHOURS 2666
DcDevice Peg Counts 2666
PERLENSEC 2666
PERLENSEC_K 2666

© Copyright IBM Corp. 2008, 2009. All Rights Reserved.

pmSamplesMeasuredDcSpLoad . . . 2667
pmSumMeasuredDcSpLoad . . . 2667
DcDevice_NodeB Primitive Calculations . . . 2667
GRAPHmultiLineSeparator . . . 2667
NUMDAYS . . . 2667
NUMHOURS . . . 2668
DcDevice_NodeB Peg Counts . . . 2668
PERLENSEC . . . 2668
PERLENSEC_K . . . 2668
RNC_RELEASE . . . 2668
DcDevice_RNC Primitive Calculations . . . 2669
GRAPHmultiLineSeparator . . . 2669
NUMDAYS . . . 2669
NUMHOURS . . . 2669
DcDevice_RNC Peg Counts . . . 2669
PERLENSEC . . . 2669
PERLENSEC_K . . . 2670
pmSamplesMeasuredDcSpLoad . . . 2670
pmSumMeasuredDcSpLoad . . . 2670
RNC_RELEASE . . . 2671
DownlinkBaseBandPool Primitive Calculations . . . 2671
GRAPHmultiLineSeparator . . . 2671
k_CE_DL_CONG . . . 2671
NUMDAYS . . . 2671
NUMHOURS . . . 2671
DownlinkBaseBandPool Peg Counts . . . 2672
NodeB_RELEASE . . . 2672
PERLENSEC . . . 2672
PERLENSEC_K . . . 2672
pmAllocRejADch . . . 2673
pmApomcOfMdlr . . . 2673
pmApomcOfMdsr . . . 2673
pmApomcOfSpreadersUsed . . . 2674
pmCapacityAllocAttDlCe . . . 2674
pmCapacityAllocRejDlCe . . . 2674
pmCapacityDlCe_00 . . . 2675
pmCapacityDlCe_01 . . . 2675
pmCapacityDlCe_02 . . . 2675
pmCapacityDlCe_03 . . . 2676
pmCapacityDlCe_04 . . . 2676
pmCapacityDlCe_05 . . . 2677
pmCapacityDlCe_06 . . . 2677
pmCapacityDlCe_07 . . . 2677
pmCapacityDlCe_08 . . . 2678
pmCapacityDlCe_09 . . . 2678
pmCapacityDlCe_10 . . . 2679
pmDIActPeakCapUsage . . . 2679
pmNoOfRadioLinksSf128_00 . . . 2679
pmNoOfRadioLinksSf128_01 . . . 2680
pmNoOfRadioLinksSf128_02 . . . 2680

pmNoOfRadioLinksSf128_03 2680
pmNoOfRadioLinksSf128_04 2681
pmNoOfRadioLinksSf128_05 2681
pmNoOfRadioLinksSf128_06 2681
pmNoOfRadioLinksSf128_07 2681
pmNoOfRadioLinksSf128_08 2682
pmNoOfRadioLinksSf128_09 2682
pmNoOfRadioLinksSf128_10 2682
pmNoOfRadioLinksSf128_11 2683
pmNoOfRadioLinksSf128_12 2683
pmNoOfRadioLinksSf128_13 2683
pmNoOfRadioLinksSf128_14 2684
pmNoOfRadioLinksSf16_00 2684
pmNoOfRadioLinksSf16_01 2684
pmNoOfRadioLinksSf16_02 2685
pmNoOfRadioLinksSf16_03 2685
pmNoOfRadioLinksSf16_04 2685
pmNoOfRadioLinksSf16_05 2685
pmNoOfRadioLinksSf16_06 2686
pmNoOfRadioLinksSf16_07 2686
pmNoOfRadioLinksSf16_08 2686
pmNoOfRadioLinksSf16_09 2687
pmNoOfRadioLinksSf16_10 2687
pmNoOfRadioLinksSf16_11 2687
pmNoOfRadioLinksSf16_12 2688
pmNoOfRadioLinksSf16_13 2688
pmNoOfRadioLinksSf16_14 2688
pmNoOfRadioLinksSf256_00 2689
pmNoOfRadioLinksSf256_01 2689
pmNoOfRadioLinksSf256_02 2689
pmNoOfRadioLinksSf256_03 2689
pmNoOfRadioLinksSf256_04 2690
pmNoOfRadioLinksSf256_05 2690
pmNoOfRadioLinksSf256_06 2690
pmNoOfRadioLinksSf256_07 2691
pmNoOfRadioLinksSf256_08 2691
pmNoOfRadioLinksSf256_09 2691
pmNoOfRadioLinksSf256_10 2692
pmNoOfRadioLinksSf256_11 2692
pmNoOfRadioLinksSf256_12 2692
pmNoOfRadioLinksSf256_13 2693
pmNoOfRadioLinksSf256_14 2693
pmNoOfRadioLinksSf32_00 2693
pmNoOfRadioLinksSf32_01 2693
pmNoOfRadioLinksSf32_02 2694
pmNoOfRadioLinksSf32_03 2694
pmNoOfRadioLinksSf32_04 2694
pmNoOfRadioLinksSf32_05 2695
pmNoOfRadioLinksSf32_06 2695
pmNoOfRadioLinksSf32_07 2695
pmNoOfRadioLinksSf32_08 2696

© Copyright IBM Corp. 2008, 2009. All Rights Reserved.

pmNoOfRadioLinksSf32_09 2696
pmNoOfRadioLinksSf32_10 2696
pmNoOfRadioLinksSf32_11 2697
pmNoOfRadioLinksSf32_12 2697
pmNoOfRadioLinksSf32_13 2697
pmNoOfRadioLinksSf32_14 2697
pmNoOfRadioLinksSf4_00 2698
pmNoOfRadioLinksSf4_01 2698
pmNoOfRadioLinksSf4_02 2698
pmNoOfRadioLinksSf4_03 2699
pmNoOfRadioLinksSf4_04 2699
pmNoOfRadioLinksSf4_05 2699
pmNoOfRadioLinksSf4_06 2700
pmNoOfRadioLinksSf4_07 2700
pmNoOfRadioLinksSf4_08 2700
pmNoOfRadioLinksSf4_09 2701
pmNoOfRadioLinksSf4_10 2701
pmNoOfRadioLinksSf4_11 2701
pmNoOfRadioLinksSf4_12 2701
pmNoOfRadioLinksSf4_13 2702
pmNoOfRadioLinksSf4_14 2702
pmNoOfRadioLinksSf64_00 2702
pmNoOfRadioLinksSf64_01 2703
pmNoOfRadioLinksSf64_02 2703
pmNoOfRadioLinksSf64_03 2703
pmNoOfRadioLinksSf64_04 2704
pmNoOfRadioLinksSf64_05 2704
pmNoOfRadioLinksSf64_06 2704
pmNoOfRadioLinksSf64_07 2705
pmNoOfRadioLinksSf64_08 2705
pmNoOfRadioLinksSf64_09 2705
pmNoOfRadioLinksSf64_10 2705
pmNoOfRadioLinksSf64_11 2706
pmNoOfRadioLinksSf64_12 2706
pmNoOfRadioLinksSf64_13 2706
pmNoOfRadioLinksSf64_14 2707
pmNoOfRadioLinksSf8_00 2707
pmNoOfRadioLinksSf8_01 2707
pmNoOfRadioLinksSf8_02 2708
pmNoOfRadioLinksSf8_03 2708
pmNoOfRadioLinksSf8_04 2708
pmNoOfRadioLinksSf8_05 2709
pmNoOfRadioLinksSf8_06 2709
pmNoOfRadioLinksSf8_07 2709
pmNoOfRadioLinksSf8_08 2709
pmNoOfRadioLinksSf8_09 2710
pmNoOfRadioLinksSf8_10 2710
pmNoOfRadioLinksSf8_11 2710
pmNoOfRadioLinksSf8_12 2711
pmNoOfRadioLinksSf8_13 2711
pmNoOfRadioLinksSf8_14 2711

pmNoOfRlAdditionFailuresSf128 2712
pmNoOfRlAdditionFailuresSf16 2712
pmNoOfRlAdditionFailuresSf256 2712
pmNoOfRlAdditionFailuresSf32 2713
pmNoOfRlAdditionFailuresSf4 2713
pmNoOfRlAdditionFailuresSf64 2713
pmNoOfRlAdditionFailuresSf8 2713
pmNoOfRlAddittionFailuresSf4 2714
pmSamplesCapacityDlCe 2714
pmSetupAttemptsSf128 2714
pmSetupAttemptsSf16 2715
pmSetupAttemptsSf256 2715
pmSetupAttemptsSf32 2715
pmSetupAttemptsSf4 2716
pmSetupAttemptsSf64 2716
pmSetupAttemptsSf8 2716
pmSetupFailuresSf128 2716
pmSetupFailuresSf16 2717
pmSetupFailuresSf256 2717
pmSetupFailuresSf32 2717
pmSetupFailuresSf4 2718
pmSetupFailuresSf64 2718
pmSetupFailuresSf8 2718
pmSumCapacityDlCe 2719
pmSumSqrCapacityDlCe 2719
pmUsedADch_00 2719
pmUsedADch_01 2720
pmUsedADch_02 2720
pmUsedADch_03 2720
pmUsedADch_04 2721
pmUsedADch_05 2721
pmUsedADch_06 2721
pmUsedADch_07 2722
pmUsedADch_08 2722
pmUsedADch_09 2722
pmUsedADch_10 2723
DtmfRcvrService Primitive Calculations 2723
GRAPHmultiLineSeparator 2723
NUMDAYS 2723
NUMHOURS 2723
DtmfRcvrService Peg Counts 2724
PERLENSEC 2724
pmForcedRelease 2724
pmNormalRelease 2724
pmTotalSeizures 2725
pmUnsuccSeizures 2725
RNC_RELEASE 2725
DtmfSenderService Primitive Calculations 2725
GRAPHmultiLineSeparator 2726
NUMDAYS 2726

© Copyright IBM Corp. 2008, 2009. All Rights Reserved.

NUMHOURS 2726
p_Seizures_Sucess_Rate 2726
DtmfSenderService Peg Counts 2726
PERLENSEC 2726
pmForcedRelease 2727
pmNormalRelease 2727
pmTotalSeizures 2727
pmUnsuccSeizures 2727
RNC_RELEASE 2728
E1PhysPathTerm_NodeB Primitive Calculations 2728
GRAPHmultiLineSeparator 2728
NUMDAYS 2728
NUMHOURS 2728
Phy_Errored_Ratio_NodeB 2729
Phy_Severely_Errored_Ratio_NodeB 2729
E1PhysPathTerm_NodeB Peg Counts 2729
NodeB_RELEASE 2729
PERLENSEC 2729
PERLENSEC_K 2730
pmEs 2730
pmSes 2730
pmUas 2731
E1PhysPathTerm_RNC Primitive Calculations 2731
GRAPHmultiLineSeparator 2731
NUMDAYS 2731
NUMHOURS 2731
Phy_Errored_Ratio_RNC 2731
Phy_Severely_Errored_Ratio_RNC 2732
E1PhysPathTerm_RNC Peg Counts 2732
PERLENSEC 2732
PERLENSEC_K 2732
pmEs 2732
pmSes 2733
pmUas 2733
RNC_RELEASE 2733
E1Ttp_NodeB Primitive Calculations 2734
GRAPHmultiLineSeparator 2734
NUMDAYS 2734
NUMHOURS 2734
Phy_Errored_Ratio_NodeB 2734
Phy_Severely_Errored_Ratio_NodeB 2734
E1Ttp_NodeB Peg Counts 2735
NodeB_RELEASE 2735
PERLENSEC 2735
PERLENSEC_K 2735
pmEs 2736
pmSes 2736
pmUas 2736
E1Ttp_RNC Primitive Calculations 2737
GRAPHmultiLineSeparator 2737

Updated: 2009-07-22

NUMDAYS 2737
NUMHOURS 2737
Phy_Errored_Ratio_RNC 2737
Phy_Severely_Errored_Ratio_RNC 2737
E1Ttp_RNC Peg Counts 2737
PERLENSEC 2737
PERLENSEC_K 2738
pmEs 2738
pmSes 2738
pmUas 2739
RNC_RELEASE 2739
ECRouteParameterSet Primitive Calculations 2739
GRAPHmultiLineSeparator 2739
NUMDAYS 2740
NUMHOURS 2740
ECRouteParameterSet Peg Counts 2740
PERLENSEC 2740
pmI10ValAslr 2740
pmI10ValAsls 2741
pmI10ValErl 2741
pmI10ValPd 2741
pmI11ValAslr 2742
pmI11ValAsls 2742
pmI11ValErl 2742
pmI11ValPd 2742
pmI12ValAslr 2743
pmI12ValAsls 2743
pmI12ValErl 2743
pmI12ValPd 2744
pmI13ValAslr 2744
pmI13ValAsls 2744
pmI13ValErl 2745
pmI13ValPd 2745
pmI14ValAslr 2745
pmI14ValAsls 2746
pmI14ValErl 2746
pmI14ValPd 2746
pmI15ValAslr 2746
pmI15ValAsls 2747
pmI15ValErl 2747
pmI15ValPd 2747
pmI16ValAslr 2748
pmI16ValAsls 2748
pmI16ValErl 2748
pmI16ValPd 2749
pmI1ValAslr 2749
pmI1ValAsls 2749
pmI1ValErl 2750
pmI1ValPd 2750
pmI2ValAslr 2750

© Copyright IBM Corp. 2008, 2009. All Rights Reserved.

pmI2ValAsls 2750
pmI2ValErl 2751
pmI2ValPd 2751
pmI3ValAslr 2751
pmI3ValAsls 2752
pmI3ValErl 2752
pmI3ValPd 2752
pmI4ValAslr 2753
pmI4ValAsls 2753
pmI4ValErl 2753
pmI4ValPd 2754
pmI5ValAslr 2754
pmI5ValAsls 2754
pmI5ValErl 2754
pmI5ValPd 2755
pmI6ValAslr 2755
pmI6ValAsls 2755
pmI6ValErl 2756
pmI6ValPd 2756
pmI7ValAslr 2756
pmI7ValAsls 2757
pmI7ValErl 2757
pmI7ValPd 2757
pmI8ValAslr 2758
pmI8ValAsls 2758
pmI8ValErl 2758
pmI8ValPd 2758
pmI9ValAslr 2759
pmI9ValAsls 2759
pmI9ValErl 2759
pmI9ValPd 2760
pmNInvalid 2760
RNC_RELEASE 2760
ECServiceRNC Primitive Calculations 2761
GRAPHmultiLineSeparator 2761
NUMDAYS 2761
NUMHOURS 2761
p_Seizures_Sucess_Rate 2761
ECServiceRNC Peg Counts 2761
PERLENSEC 2761
pmForcedRelease 2762
pmNormalRelease 2762
pmTotalSeizures 2762
pmUnsuccSeizures 2763
RNC_RELEASE 2763
EDchResources Primitive Calculations 2763
GRAPHmultiLineSeparator 2763
NUMDAYS 2763
NUMHOURS 2764
EDchResources Peg Counts 2764

Updated: 2009-07-22

PERLENSEC 2764
PERLENSEC_K 2764
pmCapacityAllocAttServEDchUsers 2764
pmCapacityServEDchUsers_00 2765
pmCapacityServEDchUsers_01 2765
pmCapacityServEDchUsers_02 2765
pmCapacityServEDchUsers_03 2766
pmCapacityServEDchUsers_04 2766
pmCapacityServEDchUsers_05 2766
pmCapacityServEDchUsers_06 2767
pmCapacityServEDchUsers_07 2767
pmCapacityServEDchUsers_08 2767
pmCapacityServEDchUsers_09 2768
pmCapacityServEDchUsers_10 2768
pmCapAllocRejServEDchUsers 2768
pmCommonChPowerEul_00 2769
pmCommonChPowerEul_01 2769
pmCommonChPowerEul_02 2769
pmCommonChPowerEul_03 2770
pmCommonChPowerEul_04 2770
pmCommonChPowerEul_05 2770
pmCommonChPowerEul_06 2771
pmCommonChPowerEul_07 2771
pmCommonChPowerEul_08 2771
pmCommonChPowerEul_09 2772
pmCommonChPowerEul_10 2772
pmCommonChPowerEul_11 2772
pmCommonChPowerEul_12 2773
pmCommonChPowerEul_13 2773
pmCommonChPowerEul_14 2773
pmCommonChPowerEul_15 2774
pmCommonChPowerEul_16 2774
pmCommonChPowerEul_17 2774
pmCommonChPowerEul_18 2775
pmCommonChPowerEul_19 2775
pmCommonChPowerEul_20 2775
pmCommonChPowerEul_21 2776
pmCommonChPowerEul_22 2776
pmCommonChPowerEul_23 2776
pmCommonChPowerEul_24 2777
pmCommonChPowerEul_25 2777
pmCommonChPowerEul_26 2777
pmCommonChPowerEul_27 2778
pmCommonChPowerEul_28 2778
pmCommonChPowerEul_29 2778
pmCommonChPowerEul_30 2779
pmCommonChPowerEul_31 2779
pmCommonChPowerEul_32 2779
pmCommonChPowerEul_33 2780
pmCommonChPowerEul_34 2780
pmCommonChPowerEul_35 2780

© Copyright IBM Corp. 2008, 2009. All Rights Reserved.

pmCommonChPowerEul_36 2781
pmCommonChPowerEul_37 2781
pmCommonChPowerEul_38 2781
pmCommonChPowerEul_39 2782
pmCommonChPowerEul_40 2782
pmLEDchTot_00 2782
pmLEDchTot_01 2783
pmLEDchTot_02 2783
pmLEDchTot_03 2784
pmLEDchTot_04 2784
pmLEDchTot_05 2784
pmLEDchTot_06 2785
pmLEDchTot_07 2785
pmLEDchTot_08 2786
pmLEDchTot_09 2786
pmLEDchTot_10 2786
pmLEDchTot_11 2787
pmLEDchTot_12 2787
pmLEDchTot_13 2788
pmLEDchTot_14 2788
pmLEDchTot_15 2788
pmLEDchTot_16 2789
pmLEDchTot_17 2789
pmLEDchTot_18 2790
pmLEDchTot_19 2790
pmLEDchTot_20 2790
pmLEDchTot_21 2791
pmLEDchTot_22 2791
pmLEDchTot_23 2792
pmLEDchTot_24 2792
pmLEDchTot_25 2792
pmLEDchTot_26 2793
pmLEDchTot_27 2793
pmLEDchTot_28 2794
pmLEDchTot_29 2794
pmLEDchTot_30 2794
pmLEDchTot_31 2795
pmLEDchTot_32 2795
pmLEDchTot_33 2796
pmLEDchTot_34 2796
pmLEDchTot_35 2796
pmLEDchTot_36 2797
pmLEDchTot_37 2797
pmLEDchTot_38 2798
pmLEDchTot_39 2798
pmLEDchTot_40 2798
pmLEDchTot_41 2799
pmLEDchTot_42 2799
pmLEDchTot_43 2800
pmLEDchTot_44 2800
pmLEDchTot_45 2800

Updated: 2009-07-22

pmLEDchTot_46 2801
pmLEDchTot_47 2801
pmLEDchTot_48 2802
pmLEDchTot_49 2802
pmLMaxEDch_00 2802
pmLMaxEDch_01 2803
pmLMaxEDch_02 2803
pmLMaxEDch_03 2804
pmLMaxEDch_04 2804
pmLMaxEDch_05 2804
pmLMaxEDch_06 2805
pmLMaxEDch_07 2805
pmLMaxEDch_08 2805
pmLMaxEDch_09 2806
pmLMaxEDch_10 2806
pmLMaxEDch_11 2807
pmLMaxEDch_12 2807
pmLMaxEDch_13 2807
pmLMaxEDch_14 2808
pmLMaxEDch_15 2808
pmLMaxEDch_16 2809
pmLMaxEDch_17 2809
pmLMaxEDch_18 2809
pmLMaxEDch_19 2810
pmLMaxEDch_20 2810
pmLMaxEDch_21 2810
pmLMaxEDch_22 2811
pmLMaxEDch_23 2811
pmLMaxEDch_24 2812
pmLMaxEDch_25 2812
pmLMaxEDch_26 2812
pmLMaxEDch_27 2813
pmLMaxEDch_28 2813
pmLMaxEDch_29 2814
pmLMaxEDch_30 2814
pmLMaxEDch_31 2814
pmLMaxEDch_32 2815
pmLMaxEDch_33 2815
pmLMaxEDch_34 2815
pmLMaxEDch_35 2816
pmLMaxEDch_36 2816
pmLMaxEDch_37 2817
pmLMaxEDch_38 2817
pmLMaxEDch_39 2817
pmLMaxEDch_40 2818
pmLMaxEDch_41 2818
pmLMaxEDch_42 2819
pmLMaxEDch_43 2819
pmLMaxEDch_44 2819
pmLMaxEDch_45 2820
pmLMaxEDch_46 2820

© Copyright IBM Corp. 2008, 2009. All Rights Reserved.

pmLMaxEDch_47 2820
pmLMaxEDch_48 2821
pmLMaxEDch_49 2821
pmNoActive10msFramesEul 2822
pmNoActive10msIntEulTti10 2822
pmNoActive2msFramesEul 2822
pmNoActive2msIntervalsEul 2823
pmNoActive2msIntervalsEulTti2 2823
pmNoAllowedEul 2823
pmNoiseFloor_00 2824
pmNoiseFloor_01 2824
pmNoiseFloor_02 2824
pmNoiseFloor_03 2825
pmNoiseFloor_04 2825
pmNoiseFloor_05 2825
pmNoiseFloor_06 2826
pmNoiseFloor_07 2826
pmNoiseFloor_08 2826
pmNoiseFloor_09 2827
pmNoiseFloor_10 2827
pmNoiseFloor_11 2827
pmNoiseFloor_12 2828
pmNoiseFloor_13 2828
pmNoiseFloor_14 2828
pmNoiseFloor_15 2829
pmNoiseFloor_16 2829
pmNoiseFloor_17 2829
pmNoiseFloor_18 2830
pmNoiseFloor_19 2830
pmNoiseFloor_20 2830
pmNoiseFloor_21 2831
pmNoiseFloor_22 2831
pmNoiseFloor_23 2831
pmNoiseFloor_24 2832
pmNoiseFloor_25 2832
pmNoiseFloor_26 2832
pmNoiseFloor_27 2833
pmNoiseFloor_28 2833
pmNoiseFloor_29 2833
pmNoiseFloor_30 2834
pmNoiseFloor_31 2834
pmNoiseFloor_32 2834
pmNoiseFloor_33 2835
pmNoiseFloor_34 2835
pmNoiseFloor_35 2835
pmNoiseFloor_36 2836
pmNoiseFloor_37 2836
pmNoiseFloor_38 2836
pmNoiseFloor_39 2837
pmNoiseFloor_40 2837
pmNoiseFloor_41 2837

pmNoiseFloor_42 2838
pmNoiseFloor_43 2838
pmNoiseFloor_44 2838
pmNoiseFloor_45 2839
pmNoiseFloor_46 2839
pmNoiseFloor_47 2839
pmNoiseFloor_48 2840
pmNoiseFloor_49 2840
pmNoiseFloor_50 2840
pmNoiseFloor_51 2841
pmNoiseFloor_52 2841
pmNoiseFloor_53 2841
pmNoiseFloor_54 2842
pmNoiseFloor_55 2842
pmNoSchEdchEul_00 2842
pmNoSchEdchEul_01 2843
pmNoSchEdchEul_02 2843
pmNoSchEdchEul_03 2843
pmNoSchEdchEul_04 2844
pmNoSchEdchEul_05 2844
pmNoSchEdchEul_06 2844
pmNoSchEdchEul_07 2845
pmNoSchEdchEul_08 2845
pmNoSchEdchEul_09 2845
pmNoSchEdchEul_10 2846
pmNoSchEdchEul_11 2846
pmNoSchEdchEul_12 2846
pmNoSchEdchEul_13 2847
pmNoSchEdchEul_14 2847
pmNoSchEdchEul_15 2847
pmNoSchEdchEul_16 2848
pmNoSchEdchEul_17 2848
pmNoSchEdchEul_18 2848
pmNoSchEdchEul_19 2849
pmNoSchEdchEul_20 2849
pmNoUlUuLoadLimitEul 2849
pmOwnUuLoad_00 2850
pmOwnUuLoad_01 2850
pmOwnUuLoad_02 2850
pmOwnUuLoad_03 2851
pmOwnUuLoad_04 2851
pmOwnUuLoad_05 2851
pmOwnUuLoad_06 2852
pmOwnUuLoad_07 2852
pmOwnUuLoad_08 2852
pmOwnUuLoad_09 2853
pmOwnUuLoad_10 2853
pmOwnUuLoad_11 2853
pmOwnUuLoad_12 2854
pmOwnUuLoad_13 2854
pmOwnUuLoad_14 2854

© Copyright IBM Corp. 2008, 2009. All Rights Reserved.

pmOwnUuLoad_15 2855
pmOwnUuLoad_16 2855
pmOwnUuLoad_17 2855
pmOwnUuLoad_18 2856
pmOwnUuLoad_19 2856
pmOwnUuLoad_20 2856
pmOwnUuLoad_21 2857
pmOwnUuLoad_22 2857
pmOwnUuLoad_23 2857
pmOwnUuLoad_24 2858
pmOwnUuLoad_25 2858
pmOwnUuLoad_26 2858
pmOwnUuLoad_27 2859
pmOwnUuLoad_28 2859
pmOwnUuLoad_29 2859
pmOwnUuLoad_30 2860
pmOwnUuLoad_31 2860
pmOwnUuLoad_32 2860
pmOwnUuLoad_33 2861
pmOwnUuLoad_34 2861
pmOwnUuLoad_35 2861
pmOwnUuLoad_36 2862
pmOwnUuLoad_37 2862
pmOwnUuLoad_38 2862
pmOwnUuLoad_39 2863
pmOwnUuLoad_40 2863
pmOwnUuLoad_41 2863
pmOwnUuLoad_42 2864
pmOwnUuLoad_43 2864
pmOwnUuLoad_44 2864
pmOwnUuLoad_45 2865
pmOwnUuLoad_46 2865
pmOwnUuLoad_47 2865
pmOwnUuLoad_48 2866
pmOwnUuLoad_49 2866
pmOwnUuLoad_50 2866
pmSamplesCapacityServEDchUsers 2867
pmSumAckedBitsCellEul 2867
pmSumAckedBitsCellEulTti10 2867
pmSumAckedBitsCellEulTti2 2868
pmSumCapacityServEDchUsers 2868
pmSumNackedBitsCellEul 2868
pmSumNackedBitsCellEulTti10 2869
pmSumNackedBitsCellEulTti2 2869
pmSumSqrCapacityServEDchUsers 2869
pmTotalRotCoverage_00 2870
pmTotalRotCoverage_01 2870
pmTotalRotCoverage_02 2870
pmTotalRotCoverage_03 2871
pmTotalRotCoverage_04 2871
pmTotalRotCoverage_05 2871

pmTotalRotCoverage_06 2872
pmTotalRotCoverage_07 2872
pmTotalRotCoverage_08 2872
pmTotalRotCoverage_09 2873
pmTotalRotCoverage_10 2873
pmTotalRotCoverage_11 2873
pmTotalRotCoverage_12 2874
pmTotalRotCoverage_13 2874
pmTotalRotCoverage_14 2874
pmTotalRotCoverage_15 2875
pmTotalRotCoverage_16 2875
pmTotalRotCoverage_17 2875
pmTotalRotCoverage_18 2876
pmTotalRotCoverage_19 2876
pmTotalRotCoverage_20 2876
pmTotalRotCoverage_21 2877
pmTotalRotCoverage_22 2877
pmTotalRotCoverage_23 2877
pmTotalRotCoverage_24 2878
pmTotalRotCoverage_25 2878
pmTotalRotCoverage_26 2878
pmTotalRotCoverage_27 2879
pmTotalRotCoverage_28 2879
pmTotalRotCoverage_29 2879
pmTotalRotCoverage_30 2880
pmTotalRotCoverage_31 2880
pmTotalRotCoverage_32 2880
pmTotalRotCoverage_33 2881
pmTotalRotCoverage_34 2881
pmTotalRotCoverage_35 2881
pmTotalRotCoverage_36 2882
pmTotalRotCoverage_37 2882
pmTotalRotCoverage_38 2882
pmTotalRotCoverage_39 2883
pmTotalRotCoverage_40 2883
pmTotalRotCoverage_41 2883
pmTotalRotCoverage_42 2884
pmTotalRotCoverage_43 2884
pmTotalRotCoverage_44 2884
pmTotalRotCoverage_45 2885
pmTotalRotCoverage_46 2885
pmTotalRotCoverage_47 2885
pmTotalRotCoverage_48 2886
pmTotalRotCoverage_49 2886
pmTotalRotCoverage_50 2886
pmTotRateGrantedEul_00 2887
pmTotRateGrantedEul_01 2887
pmTotRateGrantedEul_02 2887
pmTotRateGrantedEul_03 2888
pmTotRateGrantedEul_04 2888
pmTotRateGrantedEul_05 2888

© Copyright IBM Corp. 2008, 2009. All Rights Reserved.

pmTotRateGrantedEul_06 2889
pmTotRateGrantedEul_07 2889
pmTotRateGrantedEul_08 2889
pmTotRateGrantedEul_09 2890
pmTotRateGrantedEul_10 2890
pmTotRateGrantedEul_11 2890
pmTotRateGrantedEul_12 2891
pmTotRateGrantedEul_13 2891
pmTotRateGrantedEul_14 2891
pmTotRateGrantedEul_15 2892
pmTotRateGrantedEul_16 2892
pmTotRateGrantedEul_17 2892
pmTotRateGrantedEul_18 2893
pmTotRateGrantedEul_19 2893
pmTotRateGrantedEul_20 2893
pmTotRateGrantedEul_21 2894
pmTotRateGrantedEul_22 2894
pmTotRateGrantedEul_23 2894
pmTotRateGrantedEul_24 2895
pmTotRateGrantedEul_25 2895
pmTotRateGrantedEul_26 2895
pmTotRateGrantedEul_27 2896
pmTotRateGrantedEul_28 2896
pmTotRateGrantedEul_29 2896
pmTotRateGrantedEul_30 2897
pmTotRateGrantedEul_31 2897
pmTotRateGrantedEul_32 2897
pmTotRateGrantedEul_33 2898
pmTotRateGrantedEul_34 2898
pmTotRateGrantedEul_35 2898
pmTotRateGrantedEul_36 2899
pmTotRateGrantedEul_37 2899
pmTotRateGrantedEul_38 2899
pmTotRateGrantedEul_39 2900
pmTotRateGrantedEul_40 2900
pmTotRateGrantedEul_41 2900
pmTotRateGrantedEul_42 2901
pmTotRateGrantedEul_43 2901
pmTotRateGrantedEul_44 2901
pmTotRateGrantedEul_45 2902
pmTotRateGrantedEul_46 2902
pmTotRateGrantedEul_47 2902
pmTotRateGrantedEul_48 2903
pmTotRateGrantedEul_49 2903
pmTotRateGrantedEul_50 2903
pmTotRateGrantedEul_51 2904
pmTotRateGrantedEul_52 2904
pmTotRateGrantedEul_53 2904
pmTotRateGrantedEul_54 2905
pmTotRateGrantedEul_55 2905
pmTotRateGrantedEul_56 2905

pmTotRateGrantedEul_57 2906
pmTotRateGrantedEul_58 2906
pmTotRateGrantedEul_59 2906
pmTotRateGrantedEul_60 2907
pmWaitingTimeEul_00 2907
pmWaitingTimeEul_01 2908
pmWaitingTimeEul_02 2908
pmWaitingTimeEul_03 2908
pmWaitingTimeEul_04 2909
pmWaitingTimeEul_05 2909
pmWaitingTimeEul_06 2909
pmWaitingTimeEul_07 2910
pmWaitingTimeEul_08 2910
pmWaitingTimeEul_09 2910
pmWaitingTimeEul_10 2911
pmWaitingTimeEul_11 2911
pmWaitingTimeEul_12 2912
pmWaitingTimeEul_13 2912
pmWaitingTimeEul_14 2912
pmWaitingTimeEul_15 2913
pmWaitingTimeEul_16 2913
pmWaitingTimeEul_17 2913
pmWaitingTimeEul_18 2914
pmWaitingTimeEul_19 2914
pmWaitingTimeEul_20 2914
pmWaitingTimeEul_21 2915
pmWaitingTimeEul_22 2915
pmWaitingTimeEul_23 2916
pmWaitingTimeEul_24 2916
pmWaitingTimeEul_25 2916
pmWaitingTimeEul_26 2917
pmWaitingTimeEul_27 2917
pmWaitingTimeEul_28 2917
Equipment_NodeB Primitive Calculations 2918
GRAPHmultiLineSeparator 2918
NUMDAYS 2918
NUMHOURS 2918
Equipment_RNC Primitive Calculations 2918
GRAPHmultiLineSeparator 2918
MainProcessorLoadRNC_Equipment 2918
NUMDAYS 2919
NUMHOURS 2919
EthernetLink_NodeB Primitive Calculations 2919
GRAPHmultiLineSeparator 2919
NUMDAYS 2919
NUMHOURS 2919
Received_Packets_Ethernet_Link_NodeB 2919
Sent_Packets_IP_Ethernet_Link_NodeB 2920
EthernetLink_NodeB Peg Counts 2920
NodeB_RELEASE 2920

© Copyright IBM Corp. 2008, 2009. All Rights Reserved.

PERLENSEC . . . 2920
PERLENSEC_K . . . 2920
pmNoOfIfInDiscards . . . 2921
pmNoOfIfInErrors . . . 2921
pmNoOfIfInNUcastPkts . . . 2921
pmNoOfIfInUcastPkts . . . 2922
pmNoOfIfOutNUcastPkts . . . 2922
pmNoOfIfOutUcastPkts . . . 2922
EthernetLink_RNC Primitive Calculations . . . 2923
GRAPHmultiLineSeparator . . . 2923
NUMDAYS . . . 2923
NUMHOURS . . . 2923
Received_Packets_Ethernet_Link_RNC . . . 2923
EthernetLink_RNC Peg Counts . . . 2923
PERLENSEC . . . 2923
PERLENSEC_K . . . 2924
pmNoOfIfInDiscards . . . 2924
pmNoOfIfInErrors . . . 2924
pmNoOfIfInNUcastPkts . . . 2925
pmNoOfIfInUcastPkts . . . 2925
pmNoOfIfOutNUcastPkts . . . 2925
pmNoOfIfOutUcastPkts . . . 2926
RNC_RELEASE . . . 2926
Etm1_NodeB Primitive Calculations . . . 2926
GRAPHmultiLineSeparator . . . 2926
NUMDAYS . . . 2926
NUMHOURS . . . 2926
Etm1_RNC Primitive Calculations . . . 2927
GRAPHmultiLineSeparator . . . 2927
NUMDAYS . . . 2927
NUMHOURS . . . 2927
Etm4_NodeB Primitive Calculations . . . 2927
GRAPHmultiLineSeparator . . . 2927
NUMDAYS . . . 2927
NUMHOURS . . . 2928
Etm4_RNC Primitive Calculations . . . 2928
GRAPHmultiLineSeparator . . . 2928
NUMDAYS . . . 2928
NUMHOURS . . . 2928
FastEthernet_NodeB Primitive Calculations . . . 2928
GRAPHmultiLineSeparator . . . 2928
NUMDAYS . . . 2928
NUMHOURS . . . 2929
pmIfInOctets . . . 2929
pmIfOutOctets . . . 2929
FastEthernet_NodeB Peg Counts . . . 2929
PERLENSEC . . . 2929
PERLENSEC_K . . . 2929
pmIfInBroadcastPkts . . . 2930
pmIfInDiscards . . . 2930

Updated: 2009-07-22

pmIfInErrors 2930
pmIfInMulticastPkts 2931
pmIfInOctetsHi 2931
pmIfInOctetsLo 2931
pmIfInUcastPkts 2932
pmIfInUnknownProtos 2932
pmIfOutBroadcastPkts 2933
pmIfOutDiscards 2933
pmIfOutErrors 2933
pmIfOutMulticastPkts 2934
pmIfOutOctetsHi 2934
pmIfOutOctetsLo 2934
pmIfOutUcastPkts 2935
FastEthernet_RNC Primitive Calculations 2935
GRAPHmultiLineSeparator 2935
NUMDAYS 2935
NUMHOURS 2936
pmIfInOctets 2936
pmIfOutOctets 2936
FastEthernet_RNC Peg Counts 2936
PERLENSEC 2936
PERLENSEC_K 2936
pmIfInBroadcastPkts 2937
pmIfInDiscards 2937
pmIfInErrors 2937
pmIfInMulticastPkts 2938
pmIfInOctetsHi 2938
pmIfInOctetsLo 2938
pmIfInUcastPkts 2939
pmIfInUnknownProtos 2939
pmIfOutBroadcastPkts 2940
pmIfOutDiscards 2940
pmIfOutErrors 2940
pmIfOutMulticastPkts 2941
pmIfOutOctetsHi 2941
pmIfOutOctetsLo 2941
pmIfOutUcastPkts 2942
FrameSynch Primitive Calculations 2942
GRAPHmultiLineSeparator 2942
NUMDAYS 2942
NUMHOURS 2943
FrameSynch Peg Counts 2943
doStep 2943
dto 2943
PERLENSEC 2943
PERLENSEC_K 2944
pmNoDchDlTimingAdjContrFrames 2944
pmNoDchUlDataFramesOutsideWindow 2944
pmNoDlDchDiscardedDataFramesE 2945
pmNoDlDchDiscardedDataFramesL 2945

© Copyright IBM Corp. 2008, 2009. All Rights Reserved.

pmNoUlDchDiscardedDataFramesE 2945
pmNoUlDchDiscardedDataFramesL 2945
reservedBy 2946
RNC_Release 2946
toAE 2946
toAEUl 2947
toAWE 2947
toAWEUl 2947
toAWS 2947
toAWSUl 2947
tProcRbsDl 2948
tProcRbsUl 2948
tProcRncDl 2948
tProcRncUl 2948
uoStep 2949
userLabel 2949
uto 2949
GeneralProcUnit_NodeB Primitive Calculations 2949
GRAPHmultiLineSeparator 2949
NUMDAYS 2950
NUMHOURS 2950
GeneralProcUnit_NodeB Peg Counts 2950
pmAdmittedRequestsB0 2950
pmAdmittedRequestsB1 2950
pmAdmittedRequestsF0 2951
pmAdmittedRequestsF1 2951
pmAdmittedRequestsF2 2951
pmAdmittedRequestsF3 2952
pmAdmittedRequestsF4 2952
pmMeasuredLoad_0 2952
pmMeasuredLoad_1 2952
pmMeasuredLoad_2 2953
pmMeasuredLoad_3 2953
pmMeasuredLoad_4 2953
pmMeasuredLoad_5 2954
pmMeasuredLoad_6 2954
pmMeasuredLoad_7 2954
pmRefusedRequestsB0 2955
pmRefusedRequestsB1 2955
pmRefusedRequestsF0 2955
pmRefusedRequestsF1 2956
pmRefusedRequestsF2 2956
pmRefusedRequestsF3 2956
pmRefusedRequestsF4 2956
pmSamplesMeasuredLoad 2957
pmSumMeasuredLoad 2957
GeneralProcUnit_RNC Primitive Calculations 2957
GRAPHmultiLineSeparator 2957
NUMDAYS 2957
NUMHOURS 2958

p_MeasuredLoad 2958
GeneralProcUnit_RNC Peg Counts 2958
pmAdmittedRequestsB0 2958
pmAdmittedRequestsB1 2958
pmAdmittedRequestsF0 2959
pmAdmittedRequestsF1 2959
pmAdmittedRequestsF2 2959
pmAdmittedRequestsF3 2960
pmAdmittedRequestsF4 2960
pmMeasuredLoad_0 2960
pmMeasuredLoad_1 2960
pmMeasuredLoad_2 2961
pmMeasuredLoad_3 2961
pmMeasuredLoad_4 2961
pmMeasuredLoad_5 2962
pmMeasuredLoad_6 2962
pmMeasuredLoad_7 2962
pmRefusedRequestsB0 2963
pmRefusedRequestsB1 2963
pmRefusedRequestsF0 2963
pmRefusedRequestsF1 2964
pmRefusedRequestsF2 2964
pmRefusedRequestsF3 2964
pmRefusedRequestsF4 2964
pmSamplesMeasuredLoad 2965
pmSumMeasuredLoad 2965
GigaBitEthernet_NodeB Primitive Calculations 2965
GRAPHmultiLineSeparator 2965
NUMDAYS 2965
NUMHOURS 2966
pmIfInOctetsLink1 2966
pmIfInOctetsLink2 2966
pmIfOutOctetsLink1 2966
pmIfOutOctetsLink2 2966
GigaBitEthernet_NodeB Peg Counts 2966
PERLENSEC 2966
PERLENSEC_K 2967
pmDot1qTpVlanPortInDiscLink1 2967
pmDot1qTpVlanPortInDiscLink2 2967
pmIfInBroadcastPktsLink1 2968
pmIfInBroadcastPktsLink2 2968
pmIfInDiscardsLink1 2968
pmIfInDiscardsLink2 2969
pmIfInErrorsLink1 2969
pmIfInErrorsLink2 2969
pmIfInMulticastPktsLink1 2970
pmIfInMulticastPktsLink2 2970
pmIfInOctetsLink1Hi 2970
pmIfInOctetsLink1Lo 2971
pmIfInOctetsLink2Hi 2971

© Copyright IBM Corp. 2008, 2009. All Rights Reserved.

pmIfInOctetsLink2Lo 2972
pmIfInUcastPktsLink1 2972
pmIfInUcastPktsLink2 2972
pmIfInUnknownProtosLink1 2973
pmIfInUnknownProtosLink2 2973
pmIfOutBroadcastPktsLink1 2973
pmIfOutBroadcastPktsLink2 2974
pmIfOutDiscardsLink1 2974
pmIfOutDiscardsLink2 2974
pmIfOutErrorsLink1 2975
pmIfOutErrorsLink2 2975
pmIfOutMulticastPktsLink1 2975
pmIfOutMulticastPktsLink2 2976
pmIfOutOctetsLink1Hi 2976
pmIfOutOctetsLink1Lo 2976
pmIfOutOctetsLink2Hi 2977
pmIfOutOctetsLink2Lo 2977
pmIfOutUcastPktsLink1 2978
pmIfOutUcastPktsLink2 2978
GigaBitEthernet_RNC Primitive Calculations 2978
GRAPHmultiLineSeparator 2978
NUMDAYS 2979
NUMHOURS 2979
pmIfInOctetsLink1 2979
pmIfInOctetsLink2 2979
pmIfOutOctetsLink1 2979
pmIfOutOctetsLink2 2979
GigaBitEthernet_RNC Peg Counts 2979
PERLENSEC 2980
PERLENSEC_K 2980
pmDot1qTpVlanPortInDiscLink1 2980
pmDot1qTpVlanPortInDiscLink2 2981
pmIfInBroadcastPktsLink1 2981
pmIfInBroadcastPktsLink2 2981
pmIfInDiscardsLink1 2982
pmIfInDiscardsLink2 2982
pmIfInErrorsLink1 2982
pmIfInErrorsLink2 2983
pmIfInMulticastPktsLink1 2983
pmIfInMulticastPktsLink2 2983
pmIfInOctetsLink1Hi 2984
pmIfInOctetsLink1Lo 2984
pmIfInOctetsLink2Hi 2984
pmIfInOctetsLink2Lo 2985
pmIfInUcastPktsLink1 2985
pmIfInUcastPktsLink2 2986
pmIfInUnknownProtosLink1 2986
pmIfInUnknownProtosLink2 2986
pmIfOutBroadcastPktsLink1 2987
pmIfOutBroadcastPktsLink2 2987
pmIfOutDiscardsLink1 2987

Updated: 2009-07-22

pmIfOutDiscardsLink2 2988
pmIfOutErrorsLink1 2988
pmIfOutErrorsLink2 2988
pmIfOutMulticastPktsLink1 2989
pmIfOutMulticastPktsLink2 2989
pmIfOutOctetsLink1Hi 2989
pmIfOutOctetsLink1Lo 2990
pmIfOutOctetsLink2Hi 2990
pmIfOutOctetsLink2Lo 2990
pmIfOutUcastPktsLink1 2991
pmIfOutUcastPktsLink2 2991
GsmRelation Primitive Calculations 2992
GRAPHmultiLineSeparator 2992
GSM_Cell_Change_Failure_Rate_PS_Interactive 2992
GSM_Handover_Success_Rate_Multi_RAB 2992
GSM_Handover_Success_Rate_Speech 2992
GSM_Handover_Success_Rate_Streaming_CS_57 2992
GSM_HO_OUT_FAIL 2992
NUMDAYS 2993
NUMHOURS 2993
GsmRelation Peg Counts 2993
adjacentCell 2993
bcc 2993
bcchFrequency 2994
cellIdentity 2994
lac 2994
mcc 2995
mnc 2995
mobilityRelationType 2995
ncc 2996
NodeB_RELEASE 2996
PERLENSEC 2996
PERLENSEC_K 2996
pmAttLbhoSpeech 2997
pmFailLbhoSpeechGsmFailure 2997
pmFailLbhoSpeechNotPhyChFail 2998
pmFailLbhoSpeechPhyChFRtn 2998
pmFailLbhoSpeechUeReject 2998
pmNoAttOutIratHoCs57 2999
pmNoAttOutIratHoMulti 2999
pmNoAttOutIratHoSpeech 2999
pmNoAttOutIratHoStandalone 2999
pmNoAttOutSbHoSpeech 2999
pmNoFailOutIratHoCs57GsmFailure 2999
pmNoFailOutIratHoCs57ReturnOldChNotPhyChFail 3000
pmNoFailOutIratHoCs57ReturnOldChPhyChFail 3000
pmNoFailOutIratHoCs57UeRejection 3000
pmNoFailOutIratHoMultiGsmFailure 3000
pmNoFailOutIratHoMultiReturnOldChNotPhyChFail 3000
pmNoFailOutIratHoMultiReturnOldChPhyChFail 3000
pmNoFailOutIratHoMultiUeRejection 3000

© Copyright IBM Corp. 2008, 2009. All Rights Reserved.

pmNoFailOutIratHoSpeechGsmFailure . . . 3000
pmNoFailOutIratHoSpeechReturnOldChNotPhyChFail . . . 3000
pmNoFailOutIratHoSpeechReturnOldChPhyChFail . . . 3001
pmNoFailOutIratHoSpeechUeRejection . . . 3001
pmNoFailOutIratHoStandaloneGsmFailure . . . 3001
pmNoFailOutIratHoStandaloneReturnOldChNotPhyChFail . . . 3001
pmNoFailOutIratHoStandaloneReturnOldNotChPhyChFail . . . 3001
pmNoFailOutIratHoStandaloneUeRejection . . . 3001
pmNoFailOutSbHoSpeechGsmFailure . . . 3001
pmNoFailOutSbHoSpeechReturnOldChNotPhyChFail . . . 3002
pmNoFailOutSbHoSpeechReturnOldChPhyChFail . . . 3002
pmNoFailOutSbHoSpeechUeRejection . . . 3002
pmNoOutIratCcAtt . . . 3003
pmNoOutIratCcAttEul . . . 3003
pmNoOutIratCcAttHs . . . 3003
pmNoOutIratCcReturnOldCh . . . 3004
pmNoOutIratCcReturnOldChEul . . . 3004
pmNoOutIratCcReturnOldChHs . . . 3004
pmNoOutIratCcSuccess . . . 3005
pmNoOutIratCcSuccessEul . . . 3005
pmNoOutIratCcSuccessHs . . . 3005
pmNoSuccessOutIratHoCs57 . . . 3006
pmNoSuccessOutIratHoMulti . . . 3006
pmNoSuccessOutIratHoSpeech . . . 3006
pmNoSuccessOutIratHoStandalone . . . 3006
pmNoSuccessOutSbHoSpeech . . . 3006
pmSuccLbhoSpeech . . . 3007
priority . . . 3007
qOffset1sn . . . 3007
rac . . . 3007
racc . . . 3008
userLabel . . . 3008
GttService Primitive Calculations . . . 3008
GRAPHmultiLineSeparator . . . 3008
NUMDAYS . . . 3009
NUMHOURS . . . 3009
p_Seizures_Sucess_Rate . . . 3009
GttService Peg Counts . . . 3009
PERLENSEC . . . 3009
pmForcedRelease . . . 3009
pmNormalRelease . . . 3010
pmTotalSeizures . . . 3010
pmUnsuccSeizures . . . 3010
RNC_RELEASE . . . 3011
HsDschResources Primitive Calculations . . . 3011
GRAPHmultiLineSeparator . . . 3011
NUMDAYS . . . 3011
NUMHOURS . . . 3011
pmTransmCarrierPowerNonHsP5MD_01 . . . 3012
pmTransmCarrierPowerNonHsP5MD_02 . . . 3012

pmTransmCarrierPowerNonHsP5MD_03 3012
pmTransmCarrierPowerNonHsP5MD_04 3012
pmTransmCarrierPowerNonHsP5MD_05 3012
pmTransmCarrierPowerNonHsP5MD_06 3013
pmTransmCarrierPowerNonHsP5MD_07 3013
pmTransmCarrierPowerNonHsP5MD_08 3013
pmTransmCarrierPowerNonHsP5MD_09 3013
pmTransmCarrierPowerNonHsP5MD_10 3013
pmTransmCarrierPowerNonHsP5MD_11 3014
pmTransmCarrierPowerNonHsP5MD_12 3014
pmTransmCarrierPowerNonHsP5MD_13 3014
pmTransmCarrierPowerNonHsP5MD_14 3014
pmTransmCarrierPowerNonHsP5MD_15 3014
pmTransmCarrierPowerNonHsP5MD_16 3015
pmTransmCarrierPowerNonHsP5MD_17 3015
pmTransmCarrierPowerNonHsP5MD_18 3015
pmTransmCarrierPowerNonHsP5MD_19 3015
pmTransmCarrierPowerNonHsP5MD_20 3015
pmTransmCarrierPowerNonHsP5MD_21 3016
pmTransmCarrierPowerNonHsP5MD_22 3016
pmTransmCarrierPowerNonHsP5MD_23 3016
pmTransmCarrierPowerNonHsP5MD_24 3016
pmTransmCarrierPowerNonHsP5MD_25 3016
pmTransmCarrierPowerNonHsP5MD_26 3017
pmTransmCarrierPowerNonHsP5MD_27 3017
pmTransmCarrierPowerNonHsP5MD_28 3017
pmTransmCarrierPowerNonHsP5MD_29 3017
pmTransmCarrierPowerNonHsP5MD_30 3017
pmTransmCarrierPowerNonHsP5MD_31 3018
pmTransmCarrierPowerNonHsP5MD_32 3018
pmTransmCarrierPowerNonHsP5MD_33 3018
pmTransmCarrierPowerNonHsP5MD_34 3018
pmTransmCarrierPowerNonHsP5MD_35 3018
pmTransmCarrierPowerNonHsP5MD_36 3019
pmTransmCarrierPowerNonHsP5MD_37 3019
pmTransmCarrierPowerNonHsP5MD_38 3019
pmTransmCarrierPowerNonHsP5MD_39 3019
pmTransmCarrierPowerNonHsP5MD_40 3019
pmTransmCarrierPowerNonHsP5MD_41 3020
pmTransmCarrierPowerNonHsP5MD_42 3020
pmTransmCarrierPowerNonHsP5MD_43 3020
pmTransmCarrierPowerNonHsP5MD_44 3020
pmTransmCarrierPowerNonHsP5MD_45 3020
pmTransmCarrierPowerNonHsP5MD_46 3021
pmTransmCarrierPowerNonHsP5MD_47 3021
pmTransmCarrierPowerNonHsP5MD_48 3021
pmTransmCarrierPowerNonHsP5MD_49 3021
pmTransmCarrierPowerNonHsP5MD_50 3021
HsDschResources Peg Counts 3021
NodeB_RELEASE 3022
PERLENSEC 3022

© Copyright IBM Corp. 2008, 2009. All Rights Reserved.

PERLENSEC_K 3022
pmAck16Qam_01 3022
pmAck16Qam_02 3023
pmAck16Qam_03 3023
pmAck16Qam_04 3024
pmAck16Qam_05 3024
pmAck16Qam_06 3024
pmAck16Qam_07 3025
pmAck16Qam_08 3025
pmAck16Qam_09 3025
pmAck16Qam_10 3026
pmAck16Qam_11 3026
pmAck16Qam_12 3026
pmAck16Qam_13 3027
pmAck16Qam_14 3027
pmAck16Qam_15 3028
pmAck16Qam_16 3028
pmAck16Qam_17 3028
pmAck16Qam_18 3029
pmAck16Qam_19 3029
pmAck16Qam_20 3029
pmAck16Qam_21 3030
pmAck16Qam_22 3030
pmAck16Qam_23 3030
pmAck16Qam_24 3031
pmAck16Qam_25 3031
pmAck16Qam_26 3032
pmAck16Qam_27 3032
pmAck16Qam_28 3032
pmAck16Qam_29 3033
pmAck16Qam_30 3033
pmAck64Qam_00 3033
pmAck64Qam_01 3034
pmAck64Qam_02 3034
pmAck64Qam_03 3034
pmAck64Qam_04 3035
pmAck64Qam_05 3035
pmAck64Qam_06 3036
pmAck64Qam_07 3036
pmAck64Qam_08 3036
pmAck64Qam_09 3037
pmAck64Qam_10 3037
pmAck64Qam_11 3037
pmAck64Qam_12 3038
pmAck64Qam_13 3038
pmAck64Qam_14 3038
pmAck64Qam_15 3039
pmAck64Qam_16 3039
pmAck64Qam_17 3040
pmAck64Qam_18 3040
pmAck64Qam_19 3040

pmAck64Qam_20 3041
pmAck64Qam_21 3041
pmAck64Qam_22 3041
pmAck64Qam_23 3042
pmAck64Qam_24 3042
pmAck64Qam_25 3042
pmAck64Qam_26 3043
pmAck64Qam_27 3043
pmAck64Qam_28 3044
pmAck64Qam_29 3044
pmAckQpsk_01 3044
pmAckQpsk_02 3045
pmAckQpsk_03 3045
pmAckQpsk_04 3045
pmAckQpsk_05 3046
pmAckQpsk_06 3046
pmAckQpsk_07 3046
pmAckQpsk_08 3047
pmAckQpsk_09 3047
pmAckQpsk_10 3048
pmAckQpsk_11 3048
pmAckQpsk_12 3048
pmAckQpsk_13 3049
pmAckQpsk_14 3049
pmAckQpsk_15 3049
pmAckQpsk_16 3050
pmAckQpsk_17 3050
pmAckQpsk_18 3050
pmAckQpsk_19 3051
pmAckQpsk_20 3051
pmAckQpsk_21 3052
pmAckQpsk_22 3052
pmAckQpsk_23 3052
pmAckQpsk_24 3053
pmAckQpsk_25 3053
pmAckQpsk_26 3053
pmAckQpsk_27 3054
pmAckQpsk_28 3054
pmAckQpsk_29 3054
pmAckQpsk_30 3055
pmAckReceived 3055
pmAllocRejHwHsDschUsers 3055
pmAverageUserRate_0 3056
pmAverageUserRate_1 3056
pmAverageUserRate_10 3056
pmAverageUserRate_11 3057
pmAverageUserRate_12 3057
pmAverageUserRate_13 3057
pmAverageUserRate_14 3058
pmAverageUserRate_15 3058
pmAverageUserRate_16 3058

© Copyright IBM Corp. 2008, 2009. All Rights Reserved.

pmAverageUserRate_17 3059
pmAverageUserRate_2 3059
pmAverageUserRate_3 3059
pmAverageUserRate_4 3060
pmAverageUserRate_5 3060
pmAverageUserRate_6 3060
pmAverageUserRate_7 3061
pmAverageUserRate_8 3061
pmAverageUserRate_9 3061
pmCapacityAllocAttHsDschUsers 3062
pmCapacityAllocAttHsPdschCodes 3062
pmCapacityAllocRejHsDschUsers 3062
pmCapacityAllocRejHsPdschCodes 3063
pmCapacityHsDschUsers_00 3063
pmCapacityHsDschUsers_01 3063
pmCapacityHsDschUsers_02 3064
pmCapacityHsDschUsers_03 3064
pmCapacityHsDschUsers_04 3064
pmCapacityHsDschUsers_05 3065
pmCapacityHsDschUsers_06 3065
pmCapacityHsDschUsers_07 3065
pmCapacityHsDschUsers_08 3066
pmCapacityHsDschUsers_09 3066
pmCapacityHsDschUsers_10 3066
pmCapacityHsDschUsers_11 3067
pmCapacityHsDschUsers_12 3067
pmCapacityHsDschUsers_13 3067
pmCapacityHsDschUsers_14 3068
pmCapacityHsDschUsers_15 3068
pmCapacityHsDschUsers_16 3068
pmCapacityHsDschUsers_17 3069
pmCapacityHsDschUsers_18 3069
pmCapacityHsDschUsers_19 3069
pmCapacityHsDschUsers_20 3070
pmCapacityHsPdschCodes_00 3070
pmCapacityHsPdschCodes_01 3070
pmCapacityHsPdschCodes_02 3071
pmCapacityHsPdschCodes_03 3071
pmCapacityHsPdschCodes_04 3072
pmCapacityHsPdschCodes_05 3072
pmCapacityHsPdschCodes_06 3072
pmCapacityHsPdschCodes_07 3073
pmCapacityHsPdschCodes_08 3073
pmCapacityHsPdschCodes_09 3073
pmCapacityHsPdschCodes_10 3074
pmDelayDistrSpi00_01 3074
pmDelayDistrSpi00_02 3074
pmDelayDistrSpi00_03 3075
pmDelayDistrSpi00_04 3075
pmDelayDistrSpi00_05 3076
pmDelayDistrSpi00_06 3076

pmDelayDistrSpi00_07 3077
pmDelayDistrSpi00_08 3077
pmDelayDistrSpi00_09 3077
pmDelayDistrSpi00_10 3078
pmDelayDistrSpi00_11 3078
pmDelayDistrSpi01_01 3079
pmDelayDistrSpi01_02 3079
pmDelayDistrSpi01_03 3079
pmDelayDistrSpi01_04 3080
pmDelayDistrSpi01_05 3080
pmDelayDistrSpi01_06 3081
pmDelayDistrSpi01_07 3081
pmDelayDistrSpi01_08 3082
pmDelayDistrSpi01_09 3082
pmDelayDistrSpi01_10 3082
pmDelayDistrSpi01_11 3083
pmDelayDistrSpi02_01 3083
pmDelayDistrSpi02_02 3084
pmDelayDistrSpi02_03 3084
pmDelayDistrSpi02_04 3084
pmDelayDistrSpi02_05 3085
pmDelayDistrSpi02_06 3085
pmDelayDistrSpi02_07 3086
pmDelayDistrSpi02_08 3086
pmDelayDistrSpi02_09 3087
pmDelayDistrSpi02_10 3087
pmDelayDistrSpi02_11 3087
pmDelayDistrSpi03_01 3088
pmDelayDistrSpi03_02 3088
pmDelayDistrSpi03_03 3089
pmDelayDistrSpi03_04 3089
pmDelayDistrSpi03_05 3089
pmDelayDistrSpi03_06 3090
pmDelayDistrSpi03_07 3090
pmDelayDistrSpi03_08 3091
pmDelayDistrSpi03_09 3091
pmDelayDistrSpi03_10 3092
pmDelayDistrSpi03_11 3092
pmDelayDistrSpi04_01 3092
pmDelayDistrSpi04_02 3093
pmDelayDistrSpi04_03 3093
pmDelayDistrSpi04_04 3094
pmDelayDistrSpi04_05 3094
pmDelayDistrSpi04_06 3094
pmDelayDistrSpi04_07 3095
pmDelayDistrSpi04_08 3095
pmDelayDistrSpi04_09 3096
pmDelayDistrSpi04_10 3096
pmDelayDistrSpi04_11 3097
pmDelayDistrSpi05_01 3097
pmDelayDistrSpi05_02 3097

© Copyright IBM Corp. 2008, 2009. All Rights Reserved.

pmDelayDistrSpi05_03 3098
pmDelayDistrSpi05_04 3098
pmDelayDistrSpi05_05 3099
pmDelayDistrSpi05_06 3099
pmDelayDistrSpi05_07 3099
pmDelayDistrSpi05_08 3100
pmDelayDistrSpi05_09 3100
pmDelayDistrSpi05_10 3101
pmDelayDistrSpi05_11 3101
pmDelayDistrSpi06_01 3102
pmDelayDistrSpi06_02 3102
pmDelayDistrSpi06_03 3102
pmDelayDistrSpi06_04 3103
pmDelayDistrSpi06_05 3103
pmDelayDistrSpi06_06 3104
pmDelayDistrSpi06_07 3104
pmDelayDistrSpi06_08 3104
pmDelayDistrSpi06_09 3105
pmDelayDistrSpi06_10 3105
pmDelayDistrSpi06_11 3106
pmDelayDistrSpi07_01 3106
pmDelayDistrSpi07_02 3107
pmDelayDistrSpi07_03 3107
pmDelayDistrSpi07_04 3107
pmDelayDistrSpi07_05 3108
pmDelayDistrSpi07_06 3108
pmDelayDistrSpi07_07 3109
pmDelayDistrSpi07_08 3109
pmDelayDistrSpi07_09 3109
pmDelayDistrSpi07_10 3110
pmDelayDistrSpi07_11 3110
pmDelayDistrSpi08_01 3111
pmDelayDistrSpi08_02 3111
pmDelayDistrSpi08_03 3112
pmDelayDistrSpi08_04 3112
pmDelayDistrSpi08_05 3112
pmDelayDistrSpi08_06 3113
pmDelayDistrSpi08_07 3113
pmDelayDistrSpi08_08 3114
pmDelayDistrSpi08_09 3114
pmDelayDistrSpi08_10 3114
pmDelayDistrSpi08_11 3115
pmDelayDistrSpi09_01 3115
pmDelayDistrSpi09_02 3116
pmDelayDistrSpi09_03 3116
pmDelayDistrSpi09_04 3117
pmDelayDistrSpi09_05 3117
pmDelayDistrSpi09_06 3117
pmDelayDistrSpi09_07 3118
pmDelayDistrSpi09_08 3118
pmDelayDistrSpi09_09 3119

Updated: 2009-07-22

pmDelayDistrSpi09_10 3119
pmDelayDistrSpi09_11 3119
pmDelayDistrSpi10_01 3120
pmDelayDistrSpi10_02 3120
pmDelayDistrSpi10_03 3121
pmDelayDistrSpi10_04 3121
pmDelayDistrSpi10_05 3122
pmDelayDistrSpi10_06 3122
pmDelayDistrSpi10_07 3122
pmDelayDistrSpi10_08 3123
pmDelayDistrSpi10_09 3123
pmDelayDistrSpi10_10 3124
pmDelayDistrSpi10_11 3124
pmDelayDistrSpi11_01 3124
pmDelayDistrSpi11_02 3125
pmDelayDistrSpi11_03 3125
pmDelayDistrSpi11_04 3126
pmDelayDistrSpi11_05 3126
pmDelayDistrSpi11_06 3127
pmDelayDistrSpi11_07 3127
pmDelayDistrSpi11_08 3127
pmDelayDistrSpi11_09 3128
pmDelayDistrSpi11_10 3128
pmDelayDistrSpi11_11 3129
pmDelayDistrSpi12_01 3129
pmDelayDistrSpi12_02 3129
pmDelayDistrSpi12_03 3130
pmDelayDistrSpi12_04 3130
pmDelayDistrSpi12_05 3131
pmDelayDistrSpi12_06 3131
pmDelayDistrSpi12_07 3132
pmDelayDistrSpi12_08 3132
pmDelayDistrSpi12_09 3132
pmDelayDistrSpi12_10 3133
pmDelayDistrSpi12_11 3133
pmDelayDistrSpi13_01 3134
pmDelayDistrSpi13_02 3134
pmDelayDistrSpi13_03 3134
pmDelayDistrSpi13_04 3135
pmDelayDistrSpi13_05 3135
pmDelayDistrSpi13_06 3136
pmDelayDistrSpi13_07 3136
pmDelayDistrSpi13_08 3137
pmDelayDistrSpi13_09 3137
pmDelayDistrSpi13_10 3137
pmDelayDistrSpi13_11 3138
pmDelayDistrSpi14_01 3138
pmDelayDistrSpi14_02 3139
pmDelayDistrSpi14_03 3139
pmDelayDistrSpi14_04 3139
pmDelayDistrSpi14_05 3140

© Copyright IBM Corp. 2008, 2009. All Rights Reserved.

pmDelayDistrSpi14_06 3140
pmDelayDistrSpi14_07 3141
pmDelayDistrSpi14_08 3141
pmDelayDistrSpi14_09 3142
pmDelayDistrSpi14_10 3142
pmDelayDistrSpi14_11 3142
pmDelayDistrSpi15_01 3143
pmDelayDistrSpi15_02 3143
pmDelayDistrSpi15_03 3144
pmDelayDistrSpi15_04 3144
pmDelayDistrSpi15_05 3144
pmDelayDistrSpi15_06 3145
pmDelayDistrSpi15_07 3145
pmDelayDistrSpi15_08 3146
pmDelayDistrSpi15_09 3146
pmDelayDistrSpi15_10 3147
pmDelayDistrSpi15_11 3147
pmIubMacdPduCellReceivedBits 3147
pmNackReceived 3148
pmNoActiveSubFrames 3148
pmNoActSubFrmsSpi00 3148
pmNoActSubFrmsSpi01 3149
pmNoActSubFrmsSpi02 3149
pmNoActSubFrmsSpi03 3149
pmNoActSubFrmsSpi04 3150
pmNoActSubFrmsSpi05 3150
pmNoActSubFrmsSpi06 3151
pmNoActSubFrmsSpi07 3151
pmNoActSubFrmsSpi08 3151
pmNoActSubFrmsSpi09 3152
pmNoActSubFrmsSpi10 3152
pmNoActSubFrmsSpi11 3153
pmNoActSubFrmsSpi12 3153
pmNoActSubFrmsSpi13 3153
pmNoActSubFrmsSpi14 3154
pmNoActSubFrmsSpi15 3154
pmNoInactiveRequiredSubFrames 3154
pmNoInactReqSubFrmsSpi00 3155
pmNoInactReqSubFrmsSpi01 3155
pmNoInactReqSubFrmsSpi02 3156
pmNoInactReqSubFrmsSpi03 3156
pmNoInactReqSubFrmsSpi04 3156
pmNoInactReqSubFrmsSpi05 3157
pmNoInactReqSubFrmsSpi06 3157
pmNoInactReqSubFrmsSpi07 3157
pmNoInactReqSubFrmsSpi08 3158
pmNoInactReqSubFrmsSpi09 3158
pmNoInactReqSubFrmsSpi10 3158
pmNoInactReqSubFrmsSpi11 3159
pmNoInactReqSubFrmsSpi12 3159
pmNoInactReqSubFrmsSpi13 3160

pmNoInactReqSubFrmsSpi14 3160
pmNoInactReqSubFrmsSpi15 3160
pmNoOfHsUsersPerTti_00 3161
pmNoOfHsUsersPerTti_01 3161
pmNoOfHsUsersPerTti_02 3161
pmNoOfHsUsersPerTti_03 3162
pmNoOfHsUsersPerTti_04 3162
pmRemainingResourceCheck_00 3162
pmRemainingResourceCheck_01 3163
pmRemainingResourceCheck_02 3163
pmReportedCqi_0 3163
pmReportedCqi_1 3164
pmReportedCqi_10 3164
pmReportedCqi_11 3164
pmReportedCqi_12 3165
pmReportedCqi_13 3165
pmReportedCqi_14 3165
pmReportedCqi_15 3166
pmReportedCqi_16 3166
pmReportedCqi_17 3166
pmReportedCqi_18 3167
pmReportedCqi_19 3167
pmReportedCqi_2 3167
pmReportedCqi_20 3168
pmReportedCqi_21 3168
pmReportedCqi_22 3168
pmReportedCqi_23 3169
pmReportedCqi_24 3169
pmReportedCqi_25 3169
pmReportedCqi_26 3170
pmReportedCqi_27 3170
pmReportedCqi_28 3170
pmReportedCqi_29 3171
pmReportedCqi_3 3171
pmReportedCqi_30 3171
pmReportedCqi_31 3172
pmReportedCqi_4 3172
pmReportedCqi_5 3172
pmReportedCqi_6 3173
pmReportedCqi_7 3173
pmReportedCqi_8 3173
pmReportedCqi_9 3174
pmReportedCqi64Qam_00 3174
pmReportedCqi64Qam_01 3174
pmReportedCqi64Qam_02 3175
pmReportedCqi64Qam_03 3175
pmReportedCqi64Qam_04 3175
pmReportedCqi64Qam_05 3176
pmReportedCqi64Qam_06 3176
pmReportedCqi64Qam_07 3177
pmReportedCqi64Qam_08 3177

© Copyright IBM Corp. 2008, 2009. All Rights Reserved.

pmReportedCqi64Qam_09 3177
pmReportedCqi64Qam_10 3178
pmReportedCqi64Qam_11 3178
pmReportedCqi64Qam_12 3178
pmReportedCqi64Qam_13 3179
pmReportedCqi64Qam_14 3179
pmReportedCqi64Qam_15 3179
pmReportedCqi64Qam_16 3180
pmReportedCqi64Qam_17 3180
pmReportedCqi64Qam_18 3181
pmReportedCqi64Qam_19 3181
pmReportedCqi64Qam_20 3181
pmReportedCqi64Qam_21 3182
pmReportedCqi64Qam_22 3182
pmReportedCqi64Qam_23 3182
pmReportedCqi64Qam_24 3183
pmReportedCqi64Qam_25 3183
pmReportedCqi64Qam_26 3183
pmReportedCqi64Qam_27 3184
pmReportedCqi64Qam_28 3184
pmReportedCqi64Qam_29 3185
pmReportedCqi64Qam_30 3185
pmReportedCqiMimoDs1_00 3185
pmReportedCqiMimoDs1_01 3186
pmReportedCqiMimoDs1_02 3186
pmReportedCqiMimoDs1_03 3186
pmReportedCqiMimoDs1_04 3187
pmReportedCqiMimoDs1_05 3187
pmReportedCqiMimoDs1_06 3187
pmReportedCqiMimoDs1_07 3188
pmReportedCqiMimoDs1_08 3188
pmReportedCqiMimoDs1_09 3189
pmReportedCqiMimoDs1_10 3189
pmReportedCqiMimoDs1_11 3189
pmReportedCqiMimoDs1_12 3190
pmReportedCqiMimoDs1_13 3190
pmReportedCqiMimoDs1_14 3190
pmReportedCqiMimoDs2_00 3191
pmReportedCqiMimoDs2_01 3191
pmReportedCqiMimoDs2_02 3191
pmReportedCqiMimoDs2_03 3192
pmReportedCqiMimoDs2_04 3192
pmReportedCqiMimoDs2_05 3193
pmReportedCqiMimoDs2_06 3193
pmReportedCqiMimoDs2_07 3193
pmReportedCqiMimoDs2_08 3194
pmReportedCqiMimoDs2_09 3194
pmReportedCqiMimoDs2_10 3194
pmReportedCqiMimoDs2_11 3195
pmReportedCqiMimoDs2_12 3195
pmReportedCqiMimoDs2_13 3195

pmReportedCqiMimoDs2_14 3196
pmReportedCqiMimoSs_00 3196
pmReportedCqiMimoSs_01 3197
pmReportedCqiMimoSs_02 3197
pmReportedCqiMimoSs_03 3197
pmReportedCqiMimoSs_04 3198
pmReportedCqiMimoSs_05 3198
pmReportedCqiMimoSs_06 3198
pmReportedCqiMimoSs_07 3199
pmReportedCqiMimoSs_08 3199
pmReportedCqiMimoSs_09 3199
pmReportedCqiMimoSs_10 3200
pmReportedCqiMimoSs_11 3200
pmReportedCqiMimoSs_12 3201
pmReportedCqiMimoSs_13 3201
pmReportedCqiMimoSs_14 3201
pmReportedCqiMimoSs_15 3202
pmReportedCqiMimoSs_16 3202
pmReportedCqiMimoSs_17 3202
pmReportedCqiMimoSs_18 3203
pmReportedCqiMimoSs_19 3203
pmReportedCqiMimoSs_20 3203
pmReportedCqiMimoSs_21 3204
pmReportedCqiMimoSs_22 3204
pmReportedCqiMimoSs_23 3205
pmReportedCqiMimoSs_24 3205
pmReportedCqiMimoSs_25 3205
pmReportedCqiMimoSs_26 3206
pmReportedCqiMimoSs_27 3206
pmReportedCqiMimoSs_28 3206
pmReportedCqiMimoSs_29 3207
pmReportedCqiMimoSs_30 3207
pmReportedCqiMimoSs_31 3207
pmSampleNumHsPdschCodesAdded 3208
pmSamplesCapacityHsDschUsers 3208
pmSamplesCapacityHsPdschCodes 3208
pmSumAckedBits 3209
pmSumAckedBitsSpi00 3209
pmSumAckedBitsSpi01 3210
pmSumAckedBitsSpi02 3210
pmSumAckedBitsSpi03 3210
pmSumAckedBitsSpi04 3211
pmSumAckedBitsSpi05 3211
pmSumAckedBitsSpi06 3211
pmSumAckedBitsSpi07 3212
pmSumAckedBitsSpi08 3212
pmSumAckedBitsSpi09 3212
pmSumAckedBitsSpi10 3213
pmSumAckedBitsSpi11 3213
pmSumAckedBitsSpi12 3214
pmSumAckedBitsSpi13 3214

© Copyright IBM Corp. 2008, 2009. All Rights Reserved.

pmSumAckedBitsSpi14 3214
pmSumAckedBitsSpi15 3215
pmSumCapacityHsDschUsers 3215
pmSumCapacityHsPdschCodes 3215
pmSumDelaySpi00 3216
pmSumDelaySpi01 3216
pmSumDelaySpi02 3216
pmSumDelaySpi03 3217
pmSumDelaySpi04 3217
pmSumDelaySpi05 3218
pmSumDelaySpi06 3218
pmSumDelaySpi07 3218
pmSumDelaySpi08 3219
pmSumDelaySpi09 3219
pmSumDelaySpi10 3219
pmSumDelaySpi11 3220
pmSumDelaySpi12 3220
pmSumDelaySpi13 3221
pmSumDelaySpi14 3221
pmSumDelaySpi15 3221
pmSumJitterSpi00 3222
pmSumJitterSpi01 3222
pmSumJitterSpi02 3223
pmSumJitterSpi03 3223
pmSumJitterSpi04 3223
pmSumJitterSpi05 3224
pmSumJitterSpi06 3224
pmSumJitterSpi07 3225
pmSumJitterSpi08 3225
pmSumJitterSpi09 3225
pmSumJitterSpi10 3226
pmSumJitterSpi11 3226
pmSumJitterSpi12 3227
pmSumJitterSpi13 3227
pmSumJitterSpi14 3227
pmSumJitterSpi15 3228
pmSumNonEmptyUserBuffers 3228
pmSumNonEmUsrBuffSpi00 3229
pmSumNonEmUsrBuffSpi01 3229
pmSumNonEmUsrBuffSpi02 3229
pmSumNonEmUsrBuffSpi03 3230
pmSumNonEmUsrBuffSpi04 3230
pmSumNonEmUsrBuffSpi05 3230
pmSumNonEmUsrBuffSpi06 3231
pmSumNonEmUsrBuffSpi07 3231
pmSumNonEmUsrBuffSpi08 3232
pmSumNonEmUsrBuffSpi09 3232
pmSumNonEmUsrBuffSpi10 3232
pmSumNonEmUsrBuffSpi11 3233
pmSumNonEmUsrBuffSpi12 3233
pmSumNonEmUsrBuffSpi13 3234

pmSumNonEmUsrBuffSpi14 3234
pmSumNonEmUsrBuffSpi15 3234
pmSumNoOfUsersSpi00 3235
pmSumNoOfUsersSpi01 3235
pmSumNoOfUsersSpi02 3235
pmSumNoOfUsersSpi03 3236
pmSumNoOfUsersSpi04 3236
pmSumNoOfUsersSpi05 3237
pmSumNoOfUsersSpi06 3237
pmSumNoOfUsersSpi07 3237
pmSumNoOfUsersSpi08 3238
pmSumNoOfUsersSpi09 3238
pmSumNoOfUsersSpi10 3239
pmSumNoOfUsersSpi11 3239
pmSumNoOfUsersSpi12 3239
pmSumNoOfUsersSpi13 3240
pmSumNoOfUsersSpi14 3240
pmSumNoOfUsersSpi15 3240
pmSumNumHsPdschCodesAdded 3241
pmSumOfHsScchUsedPwr_00 3241
pmSumOfHsScchUsedPwr_01 3242
pmSumOfHsScchUsedPwr_02 3242
pmSumOfHsScchUsedPwr_03 3242
pmSumOfHsScchUsedPwr_04 3243
pmSumOfHsScchUsedPwr_05 3243
pmSumOfHsScchUsedPwr_06 3243
pmSumOfHsScchUsedPwr_07 3244
pmSumOfHsScchUsedPwr_08 3244
pmSumOfHsScchUsedPwr_09 3244
pmSumOfHsScchUsedPwr_10 3245
pmSumOfHsScchUsedPwr_100 3245
pmSumOfHsScchUsedPwr_101 3245
pmSumOfHsScchUsedPwr_102 3246
pmSumOfHsScchUsedPwr_11 3246
pmSumOfHsScchUsedPwr_12 3246
pmSumOfHsScchUsedPwr_13 3247
pmSumOfHsScchUsedPwr_14 3247
pmSumOfHsScchUsedPwr_15 3247
pmSumOfHsScchUsedPwr_16 3248
pmSumOfHsScchUsedPwr_17 3248
pmSumOfHsScchUsedPwr_18 3248
pmSumOfHsScchUsedPwr_19 3249
pmSumOfHsScchUsedPwr_20 3249
pmSumOfHsScchUsedPwr_21 3249
pmSumOfHsScchUsedPwr_22 3250
pmSumOfHsScchUsedPwr_23 3250
pmSumOfHsScchUsedPwr_24 3250
pmSumOfHsScchUsedPwr_25 3251
pmSumOfHsScchUsedPwr_26 3251
pmSumOfHsScchUsedPwr_27 3251
pmSumOfHsScchUsedPwr_28 3252

© Copyright IBM Corp. 2008, 2009. All Rights Reserved.

pmSumOfHsScchUsedPwr_29 3252
pmSumOfHsScchUsedPwr_30 3252
pmSumOfHsScchUsedPwr_31 3253
pmSumOfHsScchUsedPwr_32 3253
pmSumOfHsScchUsedPwr_33 3253
pmSumOfHsScchUsedPwr_34 3254
pmSumOfHsScchUsedPwr_35 3254
pmSumOfHsScchUsedPwr_36 3254
pmSumOfHsScchUsedPwr_37 3255
pmSumOfHsScchUsedPwr_38 3255
pmSumOfHsScchUsedPwr_39 3255
pmSumOfHsScchUsedPwr_40 3256
pmSumOfHsScchUsedPwr_41 3256
pmSumOfHsScchUsedPwr_42 3256
pmSumOfHsScchUsedPwr_43 3257
pmSumOfHsScchUsedPwr_44 3257
pmSumOfHsScchUsedPwr_45 3257
pmSumOfHsScchUsedPwr_46 3258
pmSumOfHsScchUsedPwr_47 3258
pmSumOfHsScchUsedPwr_48 3258
pmSumOfHsScchUsedPwr_49 3259
pmSumOfHsScchUsedPwr_50 3259
pmSumOfHsScchUsedPwr_51 3259
pmSumOfHsScchUsedPwr_52 3260
pmSumOfHsScchUsedPwr_53 3260
pmSumOfHsScchUsedPwr_54 3260
pmSumOfHsScchUsedPwr_55 3261
pmSumOfHsScchUsedPwr_56 3261
pmSumOfHsScchUsedPwr_57 3261
pmSumOfHsScchUsedPwr_58 3262
pmSumOfHsScchUsedPwr_59 3262
pmSumOfHsScchUsedPwr_60 3262
pmSumOfHsScchUsedPwr_61 3263
pmSumOfHsScchUsedPwr_62 3263
pmSumOfHsScchUsedPwr_63 3263
pmSumOfHsScchUsedPwr_64 3264
pmSumOfHsScchUsedPwr_65 3264
pmSumOfHsScchUsedPwr_66 3264
pmSumOfHsScchUsedPwr_67 3265
pmSumOfHsScchUsedPwr_68 3265
pmSumOfHsScchUsedPwr_69 3265
pmSumOfHsScchUsedPwr_70 3266
pmSumOfHsScchUsedPwr_71 3266
pmSumOfHsScchUsedPwr_72 3266
pmSumOfHsScchUsedPwr_73 3267
pmSumOfHsScchUsedPwr_74 3267
pmSumOfHsScchUsedPwr_75 3267
pmSumOfHsScchUsedPwr_76 3268
pmSumOfHsScchUsedPwr_77 3268
pmSumOfHsScchUsedPwr_78 3268
pmSumOfHsScchUsedPwr_79 3269

pmSumOfHsScchUsedPwr_80 3269
pmSumOfHsScchUsedPwr_81 3269
pmSumOfHsScchUsedPwr_82 3270
pmSumOfHsScchUsedPwr_83 3270
pmSumOfHsScchUsedPwr_84 3270
pmSumOfHsScchUsedPwr_85 3271
pmSumOfHsScchUsedPwr_86 3271
pmSumOfHsScchUsedPwr_87 3271
pmSumOfHsScchUsedPwr_88 3272
pmSumOfHsScchUsedPwr_89 3272
pmSumOfHsScchUsedPwr_90 3272
pmSumOfHsScchUsedPwr_91 3273
pmSumOfHsScchUsedPwr_92 3273
pmSumOfHsScchUsedPwr_93 3273
pmSumOfHsScchUsedPwr_94 3274
pmSumOfHsScchUsedPwr_95 3274
pmSumOfHsScchUsedPwr_96 3274
pmSumOfHsScchUsedPwr_97 3275
pmSumOfHsScchUsedPwr_98 3275
pmSumOfHsScchUsedPwr_99 3275
pmSumSqrCapacityHsDschUsers 3276
pmSumSqrCapacityHsPdschCodes 3276
pmSumTransmittedBits 3276
pmSumTransmittedBitsSpi00 3277
pmSumTransmittedBitsSpi01 3277
pmSumTransmittedBitsSpi02 3277
pmSumTransmittedBitsSpi03 3278
pmSumTransmittedBitsSpi04 3278
pmSumTransmittedBitsSpi05 3278
pmSumTransmittedBitsSpi06 3279
pmSumTransmittedBitsSpi07 3279
pmSumTransmittedBitsSpi08 3279
pmSumTransmittedBitsSpi09 3280
pmSumTransmittedBitsSpi10 3280
pmSumTransmittedBitsSpi11 3281
pmSumTransmittedBitsSpi12 3281
pmSumTransmittedBitsSpi13 3281
pmSumTransmittedBitsSpi14 3282
pmSumTransmittedBitsSpi15 3282
pmTransmCarrierPowerNonHsP5MD_00 3282
pmTransmCarrierPowerNonHsP5MD_51 3283
pmTransmittedCarrierPowerHs_01 3283
pmTransmittedCarrierPowerHs_02 3283
pmTransmittedCarrierPowerHs_03 3284
pmTransmittedCarrierPowerHs_04 3284
pmTransmittedCarrierPowerHs_05 3285
pmTransmittedCarrierPowerHs_06 3285
pmTransmittedCarrierPowerHs_07 3285
pmTransmittedCarrierPowerHs_08 3286
pmTransmittedCarrierPowerHs_09 3286
pmTransmittedCarrierPowerHs_10 3286

© Copyright IBM Corp. 2008, 2009. All Rights Reserved.

pmTransmittedCarrierPowerHs_11 3287
pmTransmittedCarrierPowerHs_12 3287
pmTransmittedCarrierPowerHs_13 3287
pmTransmittedCarrierPowerHs_14 3288
pmTransmittedCarrierPowerHs_15 3288
pmTransmittedCarrierPowerHs_16 3289
pmTransmittedCarrierPowerHs_17 3289
pmTransmittedCarrierPowerHs_18 3289
pmTransmittedCarrierPowerHs_19 3290
pmTransmittedCarrierPowerHs_20 3290
pmTransmittedCarrierPowerHs_21 3290
pmTransmittedCarrierPowerHs_22 3291
pmTransmittedCarrierPowerHs_23 3291
pmTransmittedCarrierPowerHs_24 3291
pmTransmittedCarrierPowerHs_25 3292
pmTransmittedCarrierPowerHs_26 3292
pmTransmittedCarrierPowerHs_27 3293
pmTransmittedCarrierPowerHs_28 3293
pmTransmittedCarrierPowerHs_29 3293
pmTransmittedCarrierPowerHs_30 3294
pmTransmittedCarrierPowerHs_31 3294
pmTransmittedCarrierPowerHs_32 3294
pmTransmittedCarrierPowerHs_33 3295
pmTransmittedCarrierPowerHs_34 3295
pmTransmittedCarrierPowerHs_35 3295
pmTransmittedCarrierPowerHs_36 3296
pmTransmittedCarrierPowerHs_37 3296
pmTransmittedCarrierPowerHs_38 3297
pmTransmittedCarrierPowerHs_39 3297
pmTransmittedCarrierPowerHs_40 3297
pmTransmittedCarrierPowerHs_41 3298
pmTransmittedCarrierPowerHs_42 3298
pmTransmittedCarrierPowerHs_43 3298
pmTransmittedCarrierPowerHs_44 3299
pmTransmittedCarrierPowerHs_45 3299
pmTransmittedCarrierPowerHs_46 3299
pmTransmittedCarrierPowerHs_47 3300
pmTransmittedCarrierPowerHs_48 3300
pmTransmittedCarrierPowerHs_49 3301
pmTransmittedCarrierPowerHs_50 3301
pmTransmittedCarrierPowerHs_51 3301
pmTransmittedCarrierPowerHs_52 3302
pmTransmittedCarrierPowerNonHs_000 3302
pmTransmittedCarrierPowerNonHs_001 3302
pmTransmittedCarrierPowerNonHs_002 3303
pmTransmittedCarrierPowerNonHs_003 3303
pmTransmittedCarrierPowerNonHs_004 3303
pmTransmittedCarrierPowerNonHs_005 3304
pmTransmittedCarrierPowerNonHs_006 3304
pmTransmittedCarrierPowerNonHs_007 3305
pmTransmittedCarrierPowerNonHs_008 3305

Updated: 2009-07-22

pmTransmittedCarrierPowerNonHs_009 3305
pmTransmittedCarrierPowerNonHs_010 3306
pmTransmittedCarrierPowerNonHs_011 3306
pmTransmittedCarrierPowerNonHs_012 3306
pmTransmittedCarrierPowerNonHs_013 3307
pmTransmittedCarrierPowerNonHs_014 3307
pmTransmittedCarrierPowerNonHs_015 3307
pmTransmittedCarrierPowerNonHs_016 3308
pmTransmittedCarrierPowerNonHs_017 3308
pmTransmittedCarrierPowerNonHs_018 3309
pmTransmittedCarrierPowerNonHs_019 3309
pmTransmittedCarrierPowerNonHs_020 3309
pmTransmittedCarrierPowerNonHs_021 3310
pmTransmittedCarrierPowerNonHs_022 3310
pmTransmittedCarrierPowerNonHs_023 3310
pmTransmittedCarrierPowerNonHs_024 3311
pmTransmittedCarrierPowerNonHs_025 3311
pmTransmittedCarrierPowerNonHs_026 3311
pmTransmittedCarrierPowerNonHs_027 3312
pmTransmittedCarrierPowerNonHs_028 3312
pmTransmittedCarrierPowerNonHs_029 3313
pmTransmittedCarrierPowerNonHs_030 3313
pmTransmittedCarrierPowerNonHs_031 3313
pmTransmittedCarrierPowerNonHs_032 3314
pmTransmittedCarrierPowerNonHs_033 3314
pmTransmittedCarrierPowerNonHs_034 3314
pmTransmittedCarrierPowerNonHs_035 3315
pmTransmittedCarrierPowerNonHs_036 3315
pmTransmittedCarrierPowerNonHs_037 3315
pmTransmittedCarrierPowerNonHs_038 3316
pmTransmittedCarrierPowerNonHs_039 3316
pmTransmittedCarrierPowerNonHs_040 3317
pmTransmittedCarrierPowerNonHs_041 3317
pmTransmittedCarrierPowerNonHs_042 3317
pmTransmittedCarrierPowerNonHs_043 3318
pmTransmittedCarrierPowerNonHs_044 3318
pmTransmittedCarrierPowerNonHs_045 3318
pmTransmittedCarrierPowerNonHs_046 3319
pmTransmittedCarrierPowerNonHs_047 3319
pmTransmittedCarrierPowerNonHs_048 3319
pmTransmittedCarrierPowerNonHs_049 3320
pmTransmittedCarrierPowerNonHs_050 3320
pmTransmittedCarrierPowerNonHs_051 3321
pmTransmittedCarrierPowerNonHs_052 3321
pmTransmittedCarrierPowerNonHs_053 3321
pmTransmittedCarrierPowerNonHs_054 3322
pmTransmittedCarrierPowerNonHs_055 3322
pmTransmittedCarrierPowerNonHs_056 3322
pmTransmittedCarrierPowerNonHs_057 3323
pmTransmittedCarrierPowerNonHs_058 3323
pmTransmittedCarrierPowerNonHs_059 3323

© Copyright IBM Corp. 2008, 2009. All Rights Reserved.

pmTransmittedCarrierPowerNonHs_060 3324
pmTransmittedCarrierPowerNonHs_061 3324
pmTransmittedCarrierPowerNonHs_062 3325
pmTransmittedCarrierPowerNonHs_063 3325
pmTransmittedCarrierPowerNonHs_064 3325
pmTransmittedCarrierPowerNonHs_065 3326
pmTransmittedCarrierPowerNonHs_066 3326
pmTransmittedCarrierPowerNonHs_067 3326
pmTransmittedCarrierPowerNonHs_068 3327
pmTransmittedCarrierPowerNonHs_069 3327
pmTransmittedCarrierPowerNonHs_070 3327
pmTransmittedCarrierPowerNonHs_071 3328
pmTransmittedCarrierPowerNonHs_072 3328
pmTransmittedCarrierPowerNonHs_073 3329
pmTransmittedCarrierPowerNonHs_074 3329
pmTransmittedCarrierPowerNonHs_075 3329
pmTransmittedCarrierPowerNonHs_076 3330
pmTransmittedCarrierPowerNonHs_077 3330
pmTransmittedCarrierPowerNonHs_078 3330
pmTransmittedCarrierPowerNonHs_079 3331
pmTransmittedCarrierPowerNonHs_080 3331
pmTransmittedCarrierPowerNonHs_081 3331
pmTransmittedCarrierPowerNonHs_082 3332
pmTransmittedCarrierPowerNonHs_083 3332
pmTransmittedCarrierPowerNonHs_084 3333
pmTransmittedCarrierPowerNonHs_085 3333
pmTransmittedCarrierPowerNonHs_086 3333
pmTransmittedCarrierPowerNonHs_087 3334
pmTransmittedCarrierPowerNonHs_088 3334
pmTransmittedCarrierPowerNonHs_089 3334
pmTransmittedCarrierPowerNonHs_090 3335
pmTransmittedCarrierPowerNonHs_091 3335
pmTransmittedCarrierPowerNonHs_092 3335
pmTransmittedCarrierPowerNonHs_093 3336
pmTransmittedCarrierPowerNonHs_094 3336
pmTransmittedCarrierPowerNonHs_095 3337
pmTransmittedCarrierPowerNonHs_096 3337
pmTransmittedCarrierPowerNonHs_097 3337
pmTransmittedCarrierPowerNonHs_098 3338
pmTransmittedCarrierPowerNonHs_099 3338
pmTransmittedCarrierPowerNonHs_100 3338
pmTransmittedCarrierPowerNonHs_101 3339
pmTransmittedCarrierPowerNonHs_102 3339
pmTxCarrierPowerNonHsP6_00 3339
pmTxCarrierPowerNonHsP6_01 3340
pmTxCarrierPowerNonHsP6_02 3340
pmTxCarrierPowerNonHsP6_03 3340
pmTxCarrierPowerNonHsP6_04 3341
pmTxCarrierPowerNonHsP6_05 3341
pmTxCarrierPowerNonHsP6_06 3341
pmTxCarrierPowerNonHsP6_07 3342

Updated: 2009-07-22

pmTxCarrierPowerNonHsP6_08 3342
pmTxCarrierPowerNonHsP6_09 3342
pmTxCarrierPowerNonHsP6_10 3343
pmTxCarrierPowerNonHsP6_11 3343
pmTxCarrierPowerNonHsP6_12 3343
pmTxCarrierPowerNonHsP6_13 3344
pmTxCarrierPowerNonHsP6_14 3344
pmTxCarrierPowerNonHsP6_15 3344
pmTxCarrierPowerNonHsP6_16 3345
pmTxCarrierPowerNonHsP6_17 3345
pmTxCarrierPowerNonHsP6_18 3345
pmTxCarrierPowerNonHsP6_19 3346
pmTxCarrierPowerNonHsP6_20 3346
pmTxCarrierPowerNonHsP6_21 3346
pmTxCarrierPowerNonHsP6_22 3347
pmTxCarrierPowerNonHsP6_23 3347
pmTxCarrierPowerNonHsP6_24 3347
pmTxCarrierPowerNonHsP6_25 3348
pmTxCarrierPowerNonHsP6_26 3348
pmTxCarrierPowerNonHsP6_27 3348
pmTxCarrierPowerNonHsP6_28 3349
pmTxCarrierPowerNonHsP6_29 3349
pmTxCarrierPowerNonHsP6_30 3349
pmTxCarrierPowerNonHsP6_31 3350
pmTxCarrierPowerNonHsP6_32 3350
pmTxCarrierPowerNonHsP6_33 3350
pmTxCarrierPowerNonHsP6_34 3351
pmTxCarrierPowerNonHsP6_35 3351
pmTxCarrierPowerNonHsP6_36 3351
pmTxCarrierPowerNonHsP6_37 3352
pmTxCarrierPowerNonHsP6_38 3352
pmTxCarrierPowerNonHsP6_39 3352
pmTxCarrierPowerNonHsP6_40 3353
pmTxCarrierPowerNonHsP6_41 3353
pmTxCarrierPowerNonHsP6_42 3353
pmTxCarrierPowerNonHsP6_43 3354
pmTxCarrierPowerNonHsP6_44 3354
pmTxCarrierPowerNonHsP6_45 3354
pmTxCarrierPowerNonHsP6_46 3355
pmTxCarrierPowerNonHsP6_47 3355
pmTxCarrierPowerNonHsP6_48 3355
pmTxCarrierPowerNonHsP6_49 3356
pmTxCarrierPowerNonHsP6_50 3356
pmTxCarrierPowerNonHsP6_51 3356
pmUsedCqi_0 3357
pmUsedCqi_1 3357
pmUsedCqi_10 3358
pmUsedCqi_11 3358
pmUsedCqi_12 3358
pmUsedCqi_13 3359
pmUsedCqi_14 3359

© Copyright IBM Corp. 2008, 2009. All Rights Reserved.

pmUsedCqi_15 3359
pmUsedCqi_16 3360
pmUsedCqi_17 3360
pmUsedCqi_18 3360
pmUsedCqi_19 3361
pmUsedCqi_2 3361
pmUsedCqi_20 3362
pmUsedCqi_21 3362
pmUsedCqi_22 3362
pmUsedCqi_23 3363
pmUsedCqi_24 3363
pmUsedCqi_25 3363
pmUsedCqi_26 3364
pmUsedCqi_27 3364
pmUsedCqi_28 3364
pmUsedCqi_29 3365
pmUsedCqi_3 3365
pmUsedCqi_30 3366
pmUsedCqi_4 3366
pmUsedCqi_5 3366
pmUsedCqi_6 3367
pmUsedCqi_7 3367
pmUsedCqi_8 3367
pmUsedCqi_9 3368
pmUsedHsPdschCodes_00 3368
pmUsedHsPdschCodes_01 3368
pmUsedHsPdschCodes_02 3369
pmUsedHsPdschCodes_03 3369
pmUsedHsPdschCodes_04 3369
pmUsedHsPdschCodes_05 3370
pmUsedHsPdschCodes_06 3370
pmUsedHsPdschCodes_07 3370
pmUsedHsPdschCodes_08 3371
pmUsedHsPdschCodes_09 3371
pmUsedHsPdschCodes_10 3371
pmUsedHsPdschCodes_11 3372
pmUsedHsPdschCodes_12 3372
pmUsedHsPdschCodes_13 3372
pmUsedHsPdschCodes_14 3373
pmUsedHsPdschCodes_15 3373
pmUsedTbs16Qam_01 3373
pmUsedTbs16Qam_02 3374
pmUsedTbs16Qam_03 3374
pmUsedTbs16Qam_04 3374
pmUsedTbs16Qam_05 3375
pmUsedTbs16Qam_06 3375
pmUsedTbs16Qam_07 3376
pmUsedTbs16Qam_08 3376
pmUsedTbs16Qam_09 3376
pmUsedTbs16Qam_10 3377
pmUsedTbs16Qam_11 3377

pmUsedTbs16Qam_12 3377
pmUsedTbs16Qam_13 3378
pmUsedTbs16Qam_14 3378
pmUsedTbs16Qam_15 3378
pmUsedTbs16Qam_16 3379
pmUsedTbs16Qam_17 3379
pmUsedTbs16Qam_18 3380
pmUsedTbs16Qam_19 3380
pmUsedTbs16Qam_20 3380
pmUsedTbs16Qam_21 3381
pmUsedTbs16Qam_22 3381
pmUsedTbs16Qam_23 3381
pmUsedTbs16Qam_24 3382
pmUsedTbs16Qam_25 3382
pmUsedTbs16Qam_26 3382
pmUsedTbs16Qam_27 3383
pmUsedTbs16Qam_28 3383
pmUsedTbs16Qam_29 3384
pmUsedTbs16Qam_30 3384
pmUsedTbs64Qam_00 3384
pmUsedTbs64Qam_01 3385
pmUsedTbs64Qam_02 3385
pmUsedTbs64Qam_03 3385
pmUsedTbs64Qam_04 3386
pmUsedTbs64Qam_05 3386
pmUsedTbs64Qam_06 3386
pmUsedTbs64Qam_07 3387
pmUsedTbs64Qam_08 3387
pmUsedTbs64Qam_09 3388
pmUsedTbs64Qam_10 3388
pmUsedTbs64Qam_11 3388
pmUsedTbs64Qam_12 3389
pmUsedTbs64Qam_13 3389
pmUsedTbs64Qam_14 3389
pmUsedTbs64Qam_15 3390
pmUsedTbs64Qam_16 3390
pmUsedTbs64Qam_17 3390
pmUsedTbs64Qam_18 3391
pmUsedTbs64Qam_19 3391
pmUsedTbs64Qam_20 3392
pmUsedTbs64Qam_21 3392
pmUsedTbs64Qam_22 3392
pmUsedTbs64Qam_23 3393
pmUsedTbs64Qam_24 3393
pmUsedTbs64Qam_25 3393
pmUsedTbs64Qam_26 3394
pmUsedTbs64Qam_27 3394
pmUsedTbs64Qam_28 3394
pmUsedTbs64Qam_29 3395
pmUsedTbsQpsk_01 3395
pmUsedTbsQpsk_02 3396

© Copyright IBM Corp. 2008, 2009. All Rights Reserved.

pmUsedTbsQpsk_03 3396
pmUsedTbsQpsk_04 3396
pmUsedTbsQpsk_05 3397
pmUsedTbsQpsk_06 3397
pmUsedTbsQpsk_07 3397
pmUsedTbsQpsk_08 3398
pmUsedTbsQpsk_09 3398
pmUsedTbsQpsk_10 3398
pmUsedTbsQpsk_11 3399
pmUsedTbsQpsk_12 3399
pmUsedTbsQpsk_13 3400
pmUsedTbsQpsk_14 3400
pmUsedTbsQpsk_15 3400
pmUsedTbsQpsk_16 3401
pmUsedTbsQpsk_17 3401
pmUsedTbsQpsk_18 3401
pmUsedTbsQpsk_19 3402
pmUsedTbsQpsk_20 3402
pmUsedTbsQpsk_21 3402
pmUsedTbsQpsk_22 3403
pmUsedTbsQpsk_23 3403
pmUsedTbsQpsk_24 3404
pmUsedTbsQpsk_25 3404
pmUsedTbsQpsk_26 3404
pmUsedTbsQpsk_27 3405
pmUsedTbsQpsk_28 3405
pmUsedTbsQpsk_29 3405
pmUsedTbsQpsk_30 3406
ImaGroup_NodeB Primitive Calculations 3406
GRAPHmultiLineSeparator 3406
NUMDAYS 3406
NUMHOURS 3406
ImaGroup_NodeB Peg Counts 3407
pmGrFc 3407
pmGrFcFe 3407
pmGrUasIma 3407
ImaGroup_RNC Primitive Calculations 3408
GRAPHmultiLineSeparator 3408
NUMDAYS 3408
NUMHOURS 3408
ImaGroup_RNC Peg Counts 3408
pmGrFc 3408
pmGrFcFe 3409
pmGrUasIma 3409
ImaLink_NodeB Primitive Calculations 3409
GRAPHmultiLineSeparator 3409
NUMDAYS 3410
NUMHOURS 3410
ImaLink_NodeB Peg Counts 3410
pmIvIma 3410

pmOifIma 3410
pmRxFc 3411
pmRxFcFe 3411
pmRxStuffIma 3411
pmRxUusIma 3412
pmRxUusImaFe 3412
pmSesIma 3412
pmSesImaFe 3413
pmTxFc 3413
pmTxFcFe 3413
pmTxStuffIma 3414
pmTxUusIma 3414
pmTxUusImaFe 3414
pmUasIma 3414
pmUasImaFe 3415
ImaLink_RNC Primitive Calculations 3415
GRAPHmultiLineSeparator 3415
NUMDAYS 3415
NUMHOURS 3415
ImaLink_RNC Peg Counts 3416
pmIvIma 3416
pmOifIma 3416
pmRxFc 3416
pmRxFcFe 3417
pmRxStuffIma 3417
pmRxUusIma 3417
pmRxUusImaFe 3418
pmSesIma 3418
pmSesImaFe 3418
pmTxFc 3419
pmTxFcFe 3419
pmTxStuffIma 3419
pmTxUusIma 3420
pmTxUusImaFe 3420
pmUasIma 3420
pmUasImaFe 3420
ImBasicMessage Primitive Calculations 3421
GRAPHmultiLineSeparator 3421
NUMDAYS 3421
NUMHOURS 3421
p_IM_basic_message_success 3421
ImBasicMessage Peg Counts 3421
PERLENSEC 3422
pmCallAttempts 3422
pmFailedCallAttempts 3422
RNC_RELEASE 3422
ImDeviceService Primitive Calculations 3423
GRAPHmultiLineSeparator 3423
NUMDAYS 3423
NUMHOURS 3423

© Copyright IBM Corp. 2008, 2009. All Rights Reserved.

p_Seizures_Sucess_Rate . . . 3423
ImDeviceService Peg Counts . . . 3423
PERLENSEC . . . 3424
RNC_RELEASE . . . 3424
ImMessageComposition Primitive Calculations . . . 3424
GRAPHmultiLineSeparator . . . 3424
NUMDAYS . . . 3424
NUMHOURS . . . 3424
p_IM_basic_message_success . . . 3425
ImMessageComposition Peg Counts . . . 3425
PERLENSEC . . . 3425
pmCallAttempts . . . 3425
pmFailedCallAttempts . . . 3425
RNC_RELEASE . . . 3426
ImService Primitive Calculations . . . 3426
GRAPHmultiLineSeparator . . . 3426
NUMDAYS . . . 3426
NUMHOURS . . . 3426
p_Seizures_Sucess_Rate . . . 3427
ImService Peg Counts . . . 3427
PERLENSEC . . . 3427
pmForcedRelease . . . 3427
pmNormalRelease . . . 3427
pmTotalSeizures . . . 3428
pmUnsuccSeizures . . . 3428
RNC_RELEASE . . . 3428
ImVariableMessage Primitive Calculations . . . 3429
GRAPHmultiLineSeparator . . . 3429
IM_basic_message_success_% . . . 3429
NUMDAYS . . . 3429
NUMHOURS . . . 3429
p_IM_basic_message_success . . . 3429
ImVariableMessage Peg Counts . . . 3429
PERLENSEC . . . 3429
pmCallAttempts . . . 3430
pmFailedCallAttempts . . . 3430
RNC_RELEASE . . . 3430
InmarsatDeviceService Primitive Calculations . . . 3431
GRAPHmultiLineSeparator . . . 3431
NUMDAYS . . . 3431
NUMHOURS . . . 3431
p_Seizures_Sucess_Rate . . . 3431
InmarsatDeviceService Peg Counts . . . 3431
PERLENSEC . . . 3431
pmForcedRelease . . . 3432
pmNormalRelease . . . 3432
pmTotalSeizures . . . 3432
pmUnsuccSeizures . . . 3433
RNC_RELEASE . . . 3433
IP_NodeB Primitive Calculations . . . 3433

Updated: 2009-07-22

GRAPHmultiLineSeparator 3433
NUMDAYS 3433
NUMHOURS 3434
IP_NodeB Peg Counts 3434
NodeB_RELEASE 3434
PERLENSEC 3434
PERLENSEC_K 3434
pmNoOfHdrErrors 3435
pmNoOfIpAddrErrors 3435
pmNoOfIpFlowDatagrams 3435
pmNoOfIpInDiscards 3436
pmNoOfIpInReceives 3436
pmNoOfIpOutDiscards 3436
pmNoOfIpReasmOKs 3437
pmNoOfIpReasmReqds 3437
IP_RNC Primitive Calculations 3437
GRAPHmultiLineSeparator 3437
NUMDAYS 3437
NUMHOURS 3438
IP_RNC Peg Counts 3438
PERLENSEC 3438
PERLENSEC_K 3438
pmNoOfHdrErrors 3438
pmNoOfIpAddrErrors 3439
pmNoOfIpFlowDatagrams 3439
pmNoOfIpInDiscards 3439
pmNoOfIpInReceives 3440
pmNoOfIpOutDiscards 3440
pmNoOfIpReasmOKs 3440
pmNoOfIpReasmReqds 3441
RNC_RELEASE 3441
IpAccessHostGpb_NodeB Primitive Calculations 3441
GRAPHmultiLineSeparator 3441
NUMDAYS 3441
NUMHOURS 3442
p_Ratio_of_discarded_received_IP_datagrams 3442
p_Ratio_of_discarded_sent_IP_datagrams 3442
Sent_IP_datagrams 3442
IpAccessHostGpb_NodeB Peg Counts 3442
pmIcmpInDestUnreachs 3442
pmIcmpInEchoReps 3443
pmIcmpInEchos 3443
pmIcmpInErrors 3443
pmIcmpInMsgs 3444
pmIcmpInParamProbs 3444
pmIcmpInRedirects 3444
pmIcmpInSrcQuenchs 3444
pmIcmpInTimeExcds 3445
pmIcmpOutDestUnreachs 3445
pmIcmpOutEchoReps 3445

© Copyright IBM Corp. 2008, 2009. All Rights Reserved.

pmIcmpOutEchos . . . 3446
pmIcmpOutErrors . . . 3446
pmIcmpOutMsgs . . . 3446
pmIcmpOutParamProbs . . . 3447
pmIpFragCreates . . . 3447
pmIpFragFails . . . 3447
pmIpFragOKs . . . 3448
pmIpInAddrErrors . . . 3448
pmIpInDelivers . . . 3448
pmIpInDiscards . . . 3449
pmIpInHdrErrors . . . 3449
pmIpInReceives . . . 3449
pmIpInUnknownProtos . . . 3450
pmIpOutDiscards . . . 3450
pmIpOutRequests . . . 3450
pmIpReasmFails . . . 3451
pmIpReasmOKs . . . 3451
pmIpReasmReqds . . . 3451
IpAccessHostGpb_RNC Primitive Calculations . . . 3452
GRAPHmultiLineSeparator . . . 3452
NUMDAYS . . . 3452
NUMHOURS . . . 3452
p_Ratio_of_discarded_received_IP_datagrams . . . 3452
p_Ratio_of_discarded_sent_IP_datagrams . . . 3452
Sent_IP_datagrams . . . 3453
IpAccessHostGpb_RNC Peg Counts . . . 3453
pmIcmpInDestUnreachs . . . 3453
pmIcmpInEchoReps . . . 3453
pmIcmpInEchos . . . 3453
pmIcmpInErrors . . . 3454
pmIcmpInMsgs . . . 3454
pmIcmpInParamProbs . . . 3454
pmIcmpInRedirects . . . 3455
pmIcmpInSrcQuenchs . . . 3455
pmIcmpInTimeExcds . . . 3455
pmIcmpOutDestUnreachs . . . 3456
pmIcmpOutEchoReps . . . 3456
pmIcmpOutEchos . . . 3456
pmIcmpOutErrors . . . 3457
pmIcmpOutMsgs . . . 3457
pmIcmpOutParamProbs . . . 3457
pmIpFragCreates . . . 3458
pmIpFragFails . . . 3458
pmIpFragOKs . . . 3458
pmIpInAddrErrors . . . 3459
pmIpInDelivers . . . 3459
pmIpInDiscards . . . 3459
pmIpInHdrErrors . . . 3460
pmIpInReceives . . . 3460
pmIpInUnknownProtos . . . 3460
pmIpOutDiscards . . . 3461

pmIpOutRequests 3461
pmIpReasmFails 3461
pmIpReasmOKs 3462
pmIpReasmReqds 3462
IpAccessHostMsb_NodeB Primitive Calculations 3462
GRAPHmultiLineSeparator 3462
NUMDAYS 3462
NUMHOURS 3463
IpAccessHostMsb_NodeB Peg Counts 3463
pmIcmpInDestUnreachs 3463
pmIcmpInErrors 3463
pmIcmpInMsgs 3463
pmIcmpOutDestUnreachs 3464
pmIcmpOutMsgs 3464
pmIpInAddrErrors 3464
pmIpInDelivers 3465
pmIpInHdrErrors 3465
pmIpInReceives 3465
pmIpInUnknownProtos 3466
pmIpOutRequests 3466
pmUdpInDatagrams 3466
pmUdpInErrors 3467
pmUdpNoPorts 3467
pmUdpOutDatagrams 3467
IpAccessHostMsb_RNC Primitive Calculations 3468
GRAPHmultiLineSeparator 3468
NUMDAYS 3468
NUMHOURS 3468
IpAccessHostMsb_RNC Peg Counts 3468
pmIcmpInDestUnreachs 3468
pmIcmpInErrors 3469
pmIcmpInMsgs 3469
pmIcmpOutDestUnreachs 3469
pmIcmpOutMsgs 3470
pmIpInAddrErrors 3470
pmIpInDelivers 3470
pmIpInHdrErrors 3471
pmIpInReceives 3471
pmIpInUnknownProtos 3471
pmIpOutRequests 3472
pmUdpInDatagrams 3472
pmUdpInErrors 3472
pmUdpNoPorts 3473
pmUdpOutDatagrams 3473
IpAccessHostSpb_NodeB Primitive Calculations 3473
GRAPHmultiLineSeparator 3473
NUMDAYS 3474
NUMHOURS 3474
IpAccessHostSpb_NodeB Peg Counts 3474
PERLENSEC 3474

© Copyright IBM Corp. 2008, 2009. All Rights Reserved.

PERLENSEC_K . . . 3474
pmIcmpInDestUnreachs . . . 3475
pmIcmpInEchoReps . . . 3475
pmIcmpInEchos . . . 3475
pmIcmpInErrors . . . 3476
pmIcmpInMsgs . . . 3476
pmIcmpInParamProbs . . . 3476
pmIcmpInRedirects . . . 3477
pmIcmpInSrcQuenchs . . . 3477
pmIcmpInTimeExcds . . . 3477
pmIcmpOutDestUnreachs . . . 3478
pmIcmpOutEchoReps . . . 3478
pmIcmpOutEchos . . . 3478
pmIcmpOutErrors . . . 3479
pmIcmpOutMsgs . . . 3479
pmIcmpOutParmProbs . . . 3479
pmIpFragCreates . . . 3480
pmIpFragFails . . . 3480
pmIpFragOKs . . . 3480
pmIpInAddrErrors . . . 3481
pmIpInDelivers . . . 3481
pmIpInDiscards . . . 3481
pmIpInHdrErrors . . . 3482
pmIpInReceives . . . 3482
pmIpInUnknownProtos . . . 3482
pmIpOutDiscards . . . 3483
pmIpOutRequests . . . 3483
pmIpReasmFails . . . 3483
pmIpReasmOKs . . . 3484
pmIpReasmReqds . . . 3484
pmUdpInDatagrams . . . 3484
pmUdpInErrors . . . 3485
pmUdpNoPorts . . . 3485
pmUdpOutDatagrams . . . 3485
IpAccessHostSpb_RNC Primitive Calculations . . . 3486
GRAPHmultiLineSeparator . . . 3486
NUMDAYS . . . 3486
NUMHOURS . . . 3486
IpAccessHostSpb_RNC Peg Counts . . . 3486
PERLENSEC . . . 3486
PERLENSEC_K . . . 3487
pmIcmpInDestUnreachs . . . 3487
pmIcmpInEchoReps . . . 3487
pmIcmpInEchos . . . 3488
pmIcmpInErrors . . . 3488
pmIcmpInMsgs . . . 3488
pmIcmpInParamProbs . . . 3489
pmIcmpInRedirects . . . 3489
pmIcmpInSrcQuenchs . . . 3489
pmIcmpInTimeExcds . . . 3490
pmIcmpOutDestUnreachs . . . 3490

Updated: 2009-07-22

pmIcmpOutEchoReps 3490
pmIcmpOutEchos 3491
pmIcmpOutErrors 3491
pmIcmpOutMsgs 3491
pmIcmpOutParmProbs 3492
pmIpFragCreates 3492
pmIpFragFails 3492
pmIpFragOKs 3493
pmIpInAddrErrors 3493
pmIpInDelivers 3494
pmIpInDiscards 3494
pmIpInHdrErrors 3494
pmIpInReceives 3495
pmIpInUnknownProtos 3495
pmIpOutDiscards 3495
pmIpOutRequests 3496
pmIpReasmFails 3496
pmIpReasmOKs 3496
pmIpReasmReqds 3497
pmUdpInDatagrams 3497
pmUdpInErrors 3497
pmUdpNoPorts 3498
pmUdpOutDatagrams 3498
IpAtmLink_NodeB Primitive Calculations 3498
GRAPHmultiLineSeparator 3499
NUMDAYS 3499
NUMHOURS 3499
Received_Packets_Data_Link_NodeB 3499
Sent_Packets_IP_Data_Link_NodeB 3499
IpAtmLink_NodeB Peg Counts 3499
NodeB_RELEASE 3499
PERLENSEC 3500
PERLENSEC_K 3500
pmNoOfIfInDiscards 3500
pmNoOfIfInErrors 3501
pmNoOfIfInNUcastPkts 3501
pmNoOfIfInUcastPkts 3501
pmNoOfIfOutDiscards 3502
pmNoOfIfOutNUcastPkts 3502
pmNoOfIfOutUcastPkts 3502
IpAtmLink_RNC Primitive Calculations 3502
GRAPHmultiLineSeparator 3503
NUMDAYS 3503
NUMHOURS 3503
Received_Packets_Data_Link_RNC 3503
IpAtmLink_RNC Peg Counts 3503
PERLENSEC 3503
PERLENSEC_K 3504
pmNoOfIfInDiscards 3504
pmNoOfIfInErrors 3504

© Copyright IBM Corp. 2008, 2009. All Rights Reserved.

pmNoOfIfInNUcastPkts . . . 3505
pmNoOfIfInUcastPkts . . . 3505
pmNoOfIfOutDiscards . . . 3505
pmNoOfIfOutNUcastPkts . . . 3505
pmNoOfIfOutUcastPkts . . . 3506
RNC_RELEASE . . . 3506
IpbService Primitive Calculations . . . 3506
GRAPHmultiLineSeparator . . . 3506
NUMDAYS . . . 3507
NUMHOURS . . . 3507
p_Seizures_Sucess_Rate . . . 3507
IpbService Peg Counts . . . 3507
PERLENSEC . . . 3507
pmForcedRelease . . . 3507
pmNormalRelease . . . 3508
pmTotalSeizures . . . 3508
pmUnsuccSeizures . . . 3508
RNC_RELEASE . . . 3509
IpEthPacketDataRouter Primitive Calculations . . . 3509
GRAPHmultiLineSeparator . . . 3509
NUMDAYS . . . 3509
NUMHOURS . . . 3509
IpEthPacketDataRouter Peg Counts . . . 3509
PERLENSEC . . . 3509
PERLENSEC_K . . . 3510
pmNoFaultyIpPackets . . . 3510
pmNoRoutedIpBytesDl . . . 3510
pmNoRoutedIpBytesUl . . . 3511
pmNoRoutedIpPacketsDl . . . 3511
pmNoRoutedIpPacketsUl . . . 3511
pmSamplesPacketDataRab . . . 3512
pmSumPacketDataRab . . . 3512
IpHostLink_NodeB Primitive Calculations . . . 3512
GRAPHmultiLineSeparator . . . 3512
NUMDAYS . . . 3512
NUMHOURS . . . 3513
IpHostLink_NodeB Peg Counts . . . 3513
PERLENSEC . . . 3513
PERLENSEC_K . . . 3513
pmNoOfIfInDiscards . . . 3513
pmNoOfIfInErrors . . . 3514
pmNoOfIfInNUcastPkts . . . 3514
pmNoOfIfInUcastPkts . . . 3514
pmNoOfIfOutDiscards . . . 3515
pmNoOfIfOutNUcastPkts . . . 3515
pmNoOfIfOutUcastPkts . . . 3515
IpInterface_NodeB Primitive Calculations . . . 3516
GRAPHmultiLineSeparator . . . 3516
NUMDAYS . . . 3516
NUMHOURS . . . 3516

IpInterface_NodeB Peg Counts 3516
PERLENSEC 3516
PERLENSEC_K 3517
pmDot1qTpVlanPortInFrames 3517
pmDot1qTpVlanPortOutFrames 3517
pmFramesExcTrafDsc 3518
pmIfStatsIpAddrErrors 3518
pmIfStatsIpInDiscards 3518
pmIfStatsIpInHdrErrors 3519
pmIfStatsIpInReceives 3519
pmIfStatsIpOutDiscards 3519
pmIfStatsIpOutRequests 3520
pmIfStatsIpUnknownProtos 3520
pmNoOfFailedPingsDefaultRouter0 3520
pmNoOfFailedPingsDefaultRouter1 3521
pmNoOfFailedPingsDefaultRouter2 3521
pmOctetsExcTrafDsc 3521
IpInterface_RNC Primitive Calculations 3522
GRAPHmultiLineSeparator 3522
NUMDAYS 3522
NUMHOURS 3522
IpInterface_RNC Peg Counts 3522
PERLENSEC 3522
PERLENSEC_K 3522
pmDot1qTpVlanPortInFrames 3523
pmDot1qTpVlanPortOutFrames 3523
pmFramesExcTrafDsc 3523
pmIfStatsIpAddrErrors 3524
pmIfStatsIpInDiscards 3524
pmIfStatsIpInHdrErrors 3524
pmIfStatsIpInReceives 3525
pmIfStatsIpOutDiscards 3525
pmIfStatsIpOutRequests 3525
pmIfStatsIpUnknownProtos 3526
pmNoOfFailedPingsDefaultRouter0 3526
pmNoOfFailedPingsDefaultRouter1 3526
pmNoOfFailedPingsDefaultRouter2 3527
pmOctetsExcTrafDsc 3527
IpSystem_NodeB Primitive Calculations 3527
GRAPHmultiLineSeparator 3528
NUMDAYS 3528
NUMHOURS 3528
IpSystem_RNC Primitive Calculations 3528
GRAPHmultiLineSeparator 3528
NUMDAYS 3528
NUMHOURS 3528
IubDataStreams Primitive Calculations 3529
GRAPHmultiLineSeparator 3529
NUMDAYS 3529
NUMHOURS 3529

© Copyright IBM Corp. 2008, 2009. All Rights Reserved.

IubDataStreams Peg Counts . . . 3529
PERLENSEC . . . 3529
PERLENSEC_K . . . 3529
pmCAlcIubHsLmtRatSpi00 . . . 3530
pmCAlcIubHsLmtRatSpi01 . . . 3530
pmCAlcIubHsLmtRatSpi02 . . . 3531
pmCAlcIubHsLmtRatSpi03 . . . 3531
pmCAlcIubHsLmtRatSpi04 . . . 3531
pmCAlcIubHsLmtRatSpi05 . . . 3532
pmCAlcIubHsLmtRatSpi06 . . . 3532
pmCAlcIubHsLmtRatSpi07 . . . 3532
pmCAlcIubHsLmtRatSpi08 . . . 3533
pmCAlcIubHsLmtRatSpi09 . . . 3533
pmCAlcIubHsLmtRatSpi10 . . . 3534
pmCAlcIubHsLmtRatSpi11 . . . 3534
pmCAlcIubHsLmtRatSpi12 . . . 3534
pmCAlcIubHsLmtRatSpi13 . . . 3535
pmCAlcIubHsLmtRatSpi14 . . . 3535
pmCAlcIubHsLmtRatSpi15 . . . 3536
pmCapAlloclubHsLimitingRatio . . . 3536
pmDchFramesCrcMismatch . . . 3536
pmDchFramesLate . . . 3537
pmDchFramesOutOfSequenceDl . . . 3537
pmDchFramesReceived . . . 3537
pmDchFramesTooLate . . . 3538
pmEdchIubLimitingRatio . . . 3538
pmEdchIubLimitingRatio_P7FP . . . 3538
pmHsDataFramesLost . . . 3539
pmHsDataFramesReceived . . . 3539
pmHsDataFrmsRxSpi00 . . . 3539
pmHsDataFrmsRxSpi01 . . . 3540
pmHsDataFrmsRxSpi02 . . . 3540
pmHsDataFrmsRxSpi03 . . . 3541
pmHsDataFrmsRxSpi04 . . . 3541
pmHsDataFrmsRxSpi05 . . . 3541
pmHsDataFrmsRxSpi06 . . . 3542
pmHsDataFrmsRxSpi07 . . . 3542
pmHsDataFrmsRxSpi08 . . . 3542
pmHsDataFrmsRxSpi09 . . . 3543
pmHsDataFrmsRxSpi10 . . . 3543
pmHsDataFrmsRxSpi11 . . . 3543
pmHsDataFrmsRxSpi12 . . . 3544
pmHsDataFrmsRxSpi13 . . . 3544
pmHsDataFrmsRxSpi14 . . . 3545
pmHsDataFrmsRxSpi15 . . . 3545
pmHsDtFrDelayIubSpi00_01 . . . 3545
pmHsDtFrDelayIubSpi00_02 . . . 3546
pmHsDtFrDelayIubSpi00_03 . . . 3546
pmHsDtFrDelayIubSpi00_04 . . . 3546
pmHsDtFrDelayIubSpi00_05 . . . 3547
pmHsDtFrDelayIubSpi00_06 . . . 3547

pmHsDtFrDelayIubSpi00_07 3548
pmHsDtFrDelayIubSpi00_08 3548
pmHsDtFrDelayIubSpi00_09 3548
pmHsDtFrDelayIubSpi00_10 3549
pmHsDtFrDelayIubSpi00_11 3549
pmHsDtFrDelayIubSpi00_12 3549
pmHsDtFrDelayIubSpi00_13 3550
pmHsDtFrDelayIubSpi00_14 3550
pmHsDtFrDelayIubSpi00_15 3551
pmHsDtFrDelayIubSpi00_16 3551
pmHsDtFrDelayIubSpi01_01 3551
pmHsDtFrDelayIubSpi01_02 3552
pmHsDtFrDelayIubSpi01_03 3552
pmHsDtFrDelayIubSpi01_04 3553
pmHsDtFrDelayIubSpi01_05 3553
pmHsDtFrDelayIubSpi01_06 3553
pmHsDtFrDelayIubSpi01_07 3554
pmHsDtFrDelayIubSpi01_08 3554
pmHsDtFrDelayIubSpi01_09 3554
pmHsDtFrDelayIubSpi01_10 3555
pmHsDtFrDelayIubSpi01_11 3555
pmHsDtFrDelayIubSpi01_12 3556
pmHsDtFrDelayIubSpi01_13 3556
pmHsDtFrDelayIubSpi01_14 3556
pmHsDtFrDelayIubSpi01_15 3557
pmHsDtFrDelayIubSpi01_16 3557
pmHsDtFrDelayIubSpi02_01 3558
pmHsDtFrDelayIubSpi02_02 3558
pmHsDtFrDelayIubSpi02_03 3558
pmHsDtFrDelayIubSpi02_04 3559
pmHsDtFrDelayIubSpi02_05 3559
pmHsDtFrDelayIubSpi02_06 3559
pmHsDtFrDelayIubSpi02_07 3560
pmHsDtFrDelayIubSpi02_08 3560
pmHsDtFrDelayIubSpi02_09 3561
pmHsDtFrDelayIubSpi02_10 3561
pmHsDtFrDelayIubSpi02_11 3561
pmHsDtFrDelayIubSpi02_12 3562
pmHsDtFrDelayIubSpi02_13 3562
pmHsDtFrDelayIubSpi02_14 3563
pmHsDtFrDelayIubSpi02_15 3563
pmHsDtFrDelayIubSpi02_16 3563
pmHsDtFrDelayIubSpi03_01 3564
pmHsDtFrDelayIubSpi03_02 3564
pmHsDtFrDelayIubSpi03_03 3564
pmHsDtFrDelayIubSpi03_04 3565
pmHsDtFrDelayIubSpi03_05 3565
pmHsDtFrDelayIubSpi03_06 3566
pmHsDtFrDelayIubSpi03_07 3566
pmHsDtFrDelayIubSpi03_08 3566
pmHsDtFrDelayIubSpi03_09 3567

© Copyright IBM Corp. 2008, 2009. All Rights Reserved.

pmHsDtFrDelayIubSpi03_10 3567
pmHsDtFrDelayIubSpi03_11 3568
pmHsDtFrDelayIubSpi03_12 3568
pmHsDtFrDelayIubSpi03_13 3568
pmHsDtFrDelayIubSpi03_14 3569
pmHsDtFrDelayIubSpi03_15 3569
pmHsDtFrDelayIubSpi03_16 3569
pmHsDtFrDelayIubSpi04_01 3570
pmHsDtFrDelayIubSpi04_02 3570
pmHsDtFrDelayIubSpi04_03 3571
pmHsDtFrDelayIubSpi04_04 3571
pmHsDtFrDelayIubSpi04_05 3571
pmHsDtFrDelayIubSpi04_06 3572
pmHsDtFrDelayIubSpi04_07 3572
pmHsDtFrDelayIubSpi04_08 3573
pmHsDtFrDelayIubSpi04_09 3573
pmHsDtFrDelayIubSpi04_10 3573
pmHsDtFrDelayIubSpi04_11 3574
pmHsDtFrDelayIubSpi04_12 3574
pmHsDtFrDelayIubSpi04_13 3574
pmHsDtFrDelayIubSpi04_14 3575
pmHsDtFrDelayIubSpi04_15 3575
pmHsDtFrDelayIubSpi04_16 3576
pmHsDtFrDelayIubSpi05_01 3576
pmHsDtFrDelayIubSpi05_02 3576
pmHsDtFrDelayIubSpi05_03 3577
pmHsDtFrDelayIubSpi05_04 3577
pmHsDtFrDelayIubSpi05_05 3578
pmHsDtFrDelayIubSpi05_06 3578
pmHsDtFrDelayIubSpi05_07 3578
pmHsDtFrDelayIubSpi05_08 3579
pmHsDtFrDelayIubSpi05_09 3579
pmHsDtFrDelayIubSpi05_10 3579
pmHsDtFrDelayIubSpi05_11 3580
pmHsDtFrDelayIubSpi05_12 3580
pmHsDtFrDelayIubSpi05_13 3581
pmHsDtFrDelayIubSpi05_14 3581
pmHsDtFrDelayIubSpi05_15 3581
pmHsDtFrDelayIubSpi05_16 3582
pmHsDtFrDelayIubSpi06_01 3582
pmHsDtFrDelayIubSpi06_02 3583
pmHsDtFrDelayIubSpi06_03 3583
pmHsDtFrDelayIubSpi06_04 3583
pmHsDtFrDelayIubSpi06_05 3584
pmHsDtFrDelayIubSpi06_06 3584
pmHsDtFrDelayIubSpi06_07 3584
pmHsDtFrDelayIubSpi06_08 3585
pmHsDtFrDelayIubSpi06_09 3585
pmHsDtFrDelayIubSpi06_10 3586
pmHsDtFrDelayIubSpi06_11 3586
pmHsDtFrDelayIubSpi06_12 3586

pmHsDtFrDelayIubSpi06_13 3587
pmHsDtFrDelayIubSpi06_14 3587
pmHsDtFrDelayIubSpi06_15 3588
pmHsDtFrDelayIubSpi06_16 3588
pmHsDtFrDelayIubSpi07_01 3588
pmHsDtFrDelayIubSpi07_02 3589
pmHsDtFrDelayIubSpi07_03 3589
pmHsDtFrDelayIubSpi07_04 3589
pmHsDtFrDelayIubSpi07_05 3590
pmHsDtFrDelayIubSpi07_06 3590
pmHsDtFrDelayIubSpi07_07 3591
pmHsDtFrDelayIubSpi07_08 3591
pmHsDtFrDelayIubSpi07_09 3591
pmHsDtFrDelayIubSpi07_10 3592
pmHsDtFrDelayIubSpi07_11 3592
pmHsDtFrDelayIubSpi07_12 3593
pmHsDtFrDelayIubSpi07_13 3593
pmHsDtFrDelayIubSpi07_14 3593
pmHsDtFrDelayIubSpi07_15 3594
pmHsDtFrDelayIubSpi07_16 3594
pmHsDtFrDelayIubSpi08_01 3594
pmHsDtFrDelayIubSpi08_02 3595
pmHsDtFrDelayIubSpi08_03 3595
pmHsDtFrDelayIubSpi08_04 3596
pmHsDtFrDelayIubSpi08_05 3596
pmHsDtFrDelayIubSpi08_06 3596
pmHsDtFrDelayIubSpi08_07 3597
pmHsDtFrDelayIubSpi08_08 3597
pmHsDtFrDelayIubSpi08_09 3598
pmHsDtFrDelayIubSpi08_10 3598
pmHsDtFrDelayIubSpi08_11 3598
pmHsDtFrDelayIubSpi08_12 3599
pmHsDtFrDelayIubSpi08_13 3599
pmHsDtFrDelayIubSpi08_14 3599
pmHsDtFrDelayIubSpi08_15 3600
pmHsDtFrDelayIubSpi08_16 3600
pmHsDtFrDelayIubSpi09_01 3601
pmHsDtFrDelayIubSpi09_02 3601
pmHsDtFrDelayIubSpi09_03 3601
pmHsDtFrDelayIubSpi09_04 3602
pmHsDtFrDelayIubSpi09_05 3602
pmHsDtFrDelayIubSpi09_06 3603
pmHsDtFrDelayIubSpi09_07 3603
pmHsDtFrDelayIubSpi09_08 3603
pmHsDtFrDelayIubSpi09_09 3604
pmHsDtFrDelayIubSpi09_10 3604
pmHsDtFrDelayIubSpi09_11 3604
pmHsDtFrDelayIubSpi09_12 3605
pmHsDtFrDelayIubSpi09_13 3605
pmHsDtFrDelayIubSpi09_14 3606
pmHsDtFrDelayIubSpi09_15 3606

© Copyright IBM Corp. 2008, 2009. All Rights Reserved.

pmHsDtFrDelayIubSpi09_16 3606
pmHsDtFrDelayIubSpi10_01 3607
pmHsDtFrDelayIubSpi10_02 3607
pmHsDtFrDelayIubSpi10_03 3608
pmHsDtFrDelayIubSpi10_04 3608
pmHsDtFrDelayIubSpi10_05 3608
pmHsDtFrDelayIubSpi10_06 3609
pmHsDtFrDelayIubSpi10_07 3609
pmHsDtFrDelayIubSpi10_08 3609
pmHsDtFrDelayIubSpi10_09 3610
pmHsDtFrDelayIubSpi10_10 3610
pmHsDtFrDelayIubSpi10_11 3611
pmHsDtFrDelayIubSpi10_12 3611
pmHsDtFrDelayIubSpi10_13 3611
pmHsDtFrDelayIubSpi10_14 3612
pmHsDtFrDelayIubSpi10_15 3612
pmHsDtFrDelayIubSpi10_16 3613
pmHsDtFrDelayIubSpi11_01 3613
pmHsDtFrDelayIubSpi11_02 3613
pmHsDtFrDelayIubSpi11_03 3614
pmHsDtFrDelayIubSpi11_04 3614
pmHsDtFrDelayIubSpi11_05 3614
pmHsDtFrDelayIubSpi11_06 3615
pmHsDtFrDelayIubSpi11_07 3615
pmHsDtFrDelayIubSpi11_08 3616
pmHsDtFrDelayIubSpi11_09 3616
pmHsDtFrDelayIubSpi11_10 3616
pmHsDtFrDelayIubSpi11_11 3617
pmHsDtFrDelayIubSpi11_12 3617
pmHsDtFrDelayIubSpi11_13 3618
pmHsDtFrDelayIubSpi11_14 3618
pmHsDtFrDelayIubSpi11_15 3618
pmHsDtFrDelayIubSpi11_16 3619
pmHsDtFrDelayIubSpi12_01 3619
pmHsDtFrDelayIubSpi12_02 3619
pmHsDtFrDelayIubSpi12_03 3620
pmHsDtFrDelayIubSpi12_04 3620
pmHsDtFrDelayIubSpi12_05 3621
pmHsDtFrDelayIubSpi12_06 3621
pmHsDtFrDelayIubSpi12_07 3621
pmHsDtFrDelayIubSpi12_08 3622
pmHsDtFrDelayIubSpi12_09 3622
pmHsDtFrDelayIubSpi12_10 3623
pmHsDtFrDelayIubSpi12_11 3623
pmHsDtFrDelayIubSpi12_12 3623
pmHsDtFrDelayIubSpi12_13 3624
pmHsDtFrDelayIubSpi12_14 3624
pmHsDtFrDelayIubSpi12_15 3624
pmHsDtFrDelayIubSpi12_16 3625
pmHsDtFrDelayIubSpi13_01 3625
pmHsDtFrDelayIubSpi13_02 3626

pmHsDtFrDelayIubSpi13_03 3626
pmHsDtFrDelayIubSpi13_04 3626
pmHsDtFrDelayIubSpi13_05 3627
pmHsDtFrDelayIubSpi13_06 3627
pmHsDtFrDelayIubSpi13_07 3628
pmHsDtFrDelayIubSpi13_08 3628
pmHsDtFrDelayIubSpi13_09 3628
pmHsDtFrDelayIubSpi13_10 3629
pmHsDtFrDelayIubSpi13_11 3629
pmHsDtFrDelayIubSpi13_12 3629
pmHsDtFrDelayIubSpi13_13 3630
pmHsDtFrDelayIubSpi13_14 3630
pmHsDtFrDelayIubSpi13_15 3631
pmHsDtFrDelayIubSpi13_16 3631
pmHsDtFrDelayIubSpi14_01 3631
pmHsDtFrDelayIubSpi14_02 3632
pmHsDtFrDelayIubSpi14_03 3632
pmHsDtFrDelayIubSpi14_04 3633
pmHsDtFrDelayIubSpi14_05 3633
pmHsDtFrDelayIubSpi14_06 3633
pmHsDtFrDelayIubSpi14_07 3634
pmHsDtFrDelayIubSpi14_08 3634
pmHsDtFrDelayIubSpi14_09 3634
pmHsDtFrDelayIubSpi14_10 3635
pmHsDtFrDelayIubSpi14_11 3635
pmHsDtFrDelayIubSpi14_12 3636
pmHsDtFrDelayIubSpi14_13 3636
pmHsDtFrDelayIubSpi14_14 3636
pmHsDtFrDelayIubSpi14_15 3637
pmHsDtFrDelayIubSpi14_16 3637
pmHsDtFrDelayIubSpi15_01 3638
pmHsDtFrDelayIubSpi15_02 3638
pmHsDtFrDelayIubSpi15_03 3638
pmHsDtFrDelayIubSpi15_04 3639
pmHsDtFrDelayIubSpi15_05 3639
pmHsDtFrDelayIubSpi15_06 3639
pmHsDtFrDelayIubSpi15_07 3640
pmHsDtFrDelayIubSpi15_08 3640
pmHsDtFrDelayIubSpi15_09 3641
pmHsDtFrDelayIubSpi15_10 3641
pmHsDtFrDelayIubSpi15_11 3641
pmHsDtFrDelayIubSpi15_12 3642
pmHsDtFrDelayIubSpi15_13 3642
pmHsDtFrDelayIubSpi15_14 3643
pmHsDtFrDelayIubSpi15_15 3643
pmHsDtFrDelayIubSpi15_16 3643
pmHsDtFrLostSpi00 3644
pmHsDtFrLostSpi01 3644
pmHsDtFrLostSpi02 3644
pmHsDtFrLostSpi03 3645
pmHsDtFrLostSpi04 3645

© Copyright IBM Corp. 2008, 2009. All Rights Reserved.

pmHsDtFrLostSpi05 3646
pmHsDtFrLostSpi06 3646
pmHsDtFrLostSpi07 3646
pmHsDtFrLostSpi08 3647
pmHsDtFrLostSpi09 3647
pmHsDtFrLostSpi10 3647
pmHsDtFrLostSpi11 3648
pmHsDtFrLostSpi12 3648
pmHsDtFrLostSpi13 3648
pmHsDtFrLostSpi14 3649
pmHsDtFrLostSpi15 3649
pmIubMacdPduRbsReceivedBits_000 3650
pmIubMacdPduRbsReceivedBits_001 3650
pmIubMacdPduRbsReceivedBits_002 3650
pmIubMacdPduRbsReceivedBits_003 3651
pmIubMacdPduRbsReceivedBits_004 3651
pmIubMacdPduRbsReceivedBits_005 3651
pmIubMacdPduRbsReceivedBits_006 3652
pmIubMacdPduRbsReceivedBits_007 3652
pmIubMacdPduRbsReceivedBits_008 3652
pmIubMacdPduRbsReceivedBits_009 3653
pmIubMacdPduRbsReceivedBits_010 3653
pmIubMacdPduRbsReceivedBits_011 3653
pmIubMacdPduRbsReceivedBits_012 3654
pmIubMacdPduRbsReceivedBits_013 3654
pmIubMacdPduRbsReceivedBits_014 3654
pmIubMacdPduRbsReceivedBits_015 3655
pmIubMacdPduRbsReceivedBits_016 3655
pmIubMacdPduRbsReceivedBits_017 3655
pmIubMacdPduRbsReceivedBits_018 3656
pmIubMacdPduRbsReceivedBits_019 3656
pmIubMacdPduRbsReceivedBits_020 3656
pmIubMacdPduRbsReceivedBits_021 3657
pmIubMacdPduRbsReceivedBits_022 3657
pmIubMacdPduRbsReceivedBits_023 3657
pmIubMacdPduRbsReceivedBits_024 3658
pmIubMacdPduRbsReceivedBits_025 3658
pmIubMacdPduRbsReceivedBits_026 3658
pmIubMacdPduRbsReceivedBits_027 3659
pmIubMacdPduRbsReceivedBits_028 3659
pmIubMacdPduRbsReceivedBits_029 3659
pmIubMacdPduRbsReceivedBits_030 3660
pmIubMacdPduRbsReceivedBits_031 3660
pmIubMacdPduRbsReceivedBits_032 3660
pmIubMacdPduRbsReceivedBits_033 3661
pmIubMacdPduRbsReceivedBits_034 3661
pmIubMacdPduRbsReceivedBits_035 3661
pmIubMacdPduRbsReceivedBits_036 3662
pmIubMacdPduRbsReceivedBits_037 3662
pmIubMacdPduRbsReceivedBits_038 3662
pmIubMacdPduRbsReceivedBits_039 3663

pmIubMacdPduRbsReceivedBits_040 3663
pmIubMacdPduRbsReceivedBits_041 3663
pmIubMacdPduRbsReceivedBits_042 3664
pmIubMacdPduRbsReceivedBits_043 3664
pmIubMacdPduRbsReceivedBits_044 3664
pmIubMacdPduRbsReceivedBits_045 3665
pmIubMacdPduRbsReceivedBits_046 3665
pmIubMacdPduRbsReceivedBits_047 3665
pmIubMacdPduRbsReceivedBits_048 3666
pmIubMacdPduRbsReceivedBits_049 3666
pmIubMacdPduRbsReceivedBits_050 3666
pmIubMacdPduRbsReceivedBits_051 3667
pmIubMacdPduRbsReceivedBits_052 3667
pmIubMacdPduRbsReceivedBits_053 3667
pmIubMacdPduRbsReceivedBits_054 3668
pmIubMacdPduRbsReceivedBits_055 3668
pmIubMacdPduRbsReceivedBits_056 3668
pmIubMacdPduRbsReceivedBits_057 3669
pmIubMacdPduRbsReceivedBits_058 3669
pmIubMacdPduRbsReceivedBits_059 3669
pmIubMacdPduRbsReceivedBits_060 3670
pmIubMacdPduRbsReceivedBits_061 3670
pmIubMacdPduRbsReceivedBits_062 3670
pmIubMacdPduRbsReceivedBits_063 3671
pmIubMacdPduRbsReceivedBits_064 3671
pmIubMacdPduRbsReceivedBits_065 3671
pmIubMacdPduRbsReceivedBits_066 3672
pmIubMacdPduRbsReceivedBits_067 3672
pmIubMacdPduRbsReceivedBits_068 3672
pmIubMacdPduRbsReceivedBits_069 3673
pmIubMacdPduRbsReceivedBits_070 3673
pmIubMacdPduRbsReceivedBits_071 3673
pmIubMacdPduRbsReceivedBits_072 3674
pmIubMacdPduRbsReceivedBits_073 3674
pmIubMacdPduRbsReceivedBits_074 3674
pmIubMacdPduRbsReceivedBits_075 3675
pmIubMacdPduRbsReceivedBits_076 3675
pmIubMacdPduRbsReceivedBits_077 3675
pmIubMacdPduRbsReceivedBits_078 3676
pmIubMacdPduRbsReceivedBits_079 3676
pmIubMacdPduRbsReceivedBits_080 3676
pmIubMacdPduRbsReceivedBits_081 3677
pmIubMacdPduRbsReceivedBits_082 3677
pmIubMacdPduRbsReceivedBits_083 3677
pmIubMacdPduRbsReceivedBits_084 3678
pmIubMacdPduRbsReceivedBits_085 3678
pmIubMacdPduRbsReceivedBits_086 3678
pmIubMacdPduRbsReceivedBits_087 3679
pmIubMacdPduRbsReceivedBits_088 3679
pmIubMacdPduRbsReceivedBits_089 3679
pmIubMacdPduRbsReceivedBits_090 3680

© Copyright IBM Corp. 2008, 2009. All Rights Reserved.

pmIubMacdPduRbsReceivedBits_091 3680
pmIubMacdPduRbsReceivedBits_092 3680
pmIubMacdPduRbsReceivedBits_093 3681
pmIubMacdPduRbsReceivedBits_094 3681
pmIubMacdPduRbsReceivedBits_095 3681
pmIubMacdPduRbsReceivedBits_096 3682
pmIubMacdPduRbsReceivedBits_097 3682
pmIubMacdPduRbsReceivedBits_098 3682
pmIubMacdPduRbsReceivedBits_099 3683
pmIubMacdPduRbsReceivedBits_100 3683
pmNoUlIubLimitEul 3683
pmRbsHsPdschCodePrio 3684
pmTargetHsRate_000 3684
pmTargetHsRate_001 3684
pmTargetHsRate_002 3685
pmTargetHsRate_003 3685
pmTargetHsRate_004 3685
pmTargetHsRate_005 3686
pmTargetHsRate_006 3686
pmTargetHsRate_007 3686
pmTargetHsRate_008 3687
pmTargetHsRate_009 3687
pmTargetHsRate_010 3687
pmTargetHsRate_011 3688
pmTargetHsRate_012 3688
pmTargetHsRate_013 3688
pmTargetHsRate_014 3689
pmTargetHsRate_015 3689
pmTargetHsRate_016 3689
pmTargetHsRate_017 3690
pmTargetHsRate_018 3690
pmTargetHsRate_019 3690
pmTargetHsRate_020 3691
pmTargetHsRate_021 3691
pmTargetHsRate_022 3691
pmTargetHsRate_023 3692
pmTargetHsRate_024 3692
pmTargetHsRate_025 3692
pmTargetHsRate_026 3693
pmTargetHsRate_027 3693
pmTargetHsRate_028 3693
pmTargetHsRate_029 3694
pmTargetHsRate_030 3694
pmTargetHsRate_031 3694
pmTargetHsRate_032 3695
pmTargetHsRate_033 3695
pmTargetHsRate_034 3695
pmTargetHsRate_035 3696
pmTargetHsRate_036 3696
pmTargetHsRate_037 3696
pmTargetHsRate_038 3697

pmTargetHsRate_039 3697
pmTargetHsRate_040 3697
pmTargetHsRate_041 3698
pmTargetHsRate_042 3698
pmTargetHsRate_043 3698
pmTargetHsRate_044 3699
pmTargetHsRate_045 3699
pmTargetHsRate_046 3699
pmTargetHsRate_047 3700
pmTargetHsRate_048 3700
pmTargetHsRate_049 3700
pmTargetHsRate_050 3701
pmTargetHsRate_051 3701
pmTargetHsRate_052 3701
pmTargetHsRate_053 3702
pmTargetHsRate_054 3702
pmTargetHsRate_055 3702
pmTargetHsRate_056 3703
pmTargetHsRate_057 3703
pmTargetHsRate_058 3703
pmTargetHsRate_059 3704
pmTargetHsRate_060 3704
pmTargetHsRate_061 3704
pmTargetHsRate_062 3705
pmTargetHsRate_063 3705
pmTargetHsRate_064 3705
pmTargetHsRate_065 3706
pmTargetHsRate_066 3706
pmTargetHsRate_067 3706
pmTargetHsRate_068 3707
pmTargetHsRate_069 3707
pmTargetHsRate_070 3707
pmTargetHsRate_071 3708
pmTargetHsRate_072 3708
pmTargetHsRate_073 3708
pmTargetHsRate_074 3709
pmTargetHsRate_075 3709
pmTargetHsRate_076 3709
pmTargetHsRate_077 3710
pmTargetHsRate_078 3710
pmTargetHsRate_079 3710
pmTargetHsRate_080 3711
pmTargetHsRate_081 3711
pmTargetHsRate_082 3711
pmTargetHsRate_083 3712
pmTargetHsRate_084 3712
pmTargetHsRate_085 3712
pmTargetHsRate_086 3713
pmTargetHsRate_087 3713
pmTargetHsRate_088 3713
pmTargetHsRate_089 3714

© Copyright IBM Corp. 2008, 2009. All Rights Reserved.

pmTargetHsRate_090 . . . 3714
pmTargetHsRate_091 . . . 3714
pmTargetHsRate_092 . . . 3715
pmTargetHsRate_093 . . . 3715
pmTargetHsRate_094 . . . 3715
pmTargetHsRate_095 . . . 3716
pmTargetHsRate_096 . . . 3716
pmTargetHsRate_097 . . . 3716
pmTargetHsRate_098 . . . 3717
pmTargetHsRate_099 . . . 3717
pmTargetHsRate_100 . . . 3717
IubEdch Primitive Calculations . . . 3718
GRAPHmultiLineSeparator . . . 3718
NUMDAYS . . . 3718
NUMHOURS . . . 3718
IubEdch Peg Counts . . . 3718
PERLENSEC . . . 3718
PERLENSEC_K . . . 3719
pmEdchDataFrameDelayIub_00 . . . 3719
pmEdchDataFrameDelayIub_01 . . . 3719
pmEdchDataFrameDelayIub_02 . . . 3720
pmEdchDataFrameDelayIub_03 . . . 3720
pmEdchDataFrameDelayIub_04 . . . 3720
pmEdchDataFrameDelayIub_05 . . . 3721
pmEdchDataFrameDelayIub_06 . . . 3721
pmEdchDataFrameDelayIub_07 . . . 3721
pmEdchDataFrameDelayIub_08 . . . 3722
pmEdchDataFrameDelayIub_09 . . . 3722
pmEdchDataFrameDelayIub_10 . . . 3722
pmEdchDataFrameDelayIub_11 . . . 3723
pmEdchDataFrameDelayIub_12 . . . 3723
pmEdchDataFrameDelayIub_13 . . . 3723
pmEdchDataFrameDelayIub_14 . . . 3724
pmEdchDataFrameDelayIub_15 . . . 3724
pmEdchDataFramesLost . . . 3724
pmEdchDataFramesReceived . . . 3725
IubLink Primitive Calculations . . . 3725
GRAPHmultiLineSeparator . . . 3725
NUMDAYS . . . 3725
NUMHOURS . . . 3725
IubLink Peg Counts . . . 3725
availabilityStatus . . . 3726
beMarginDlHw . . . 3726
beMarginUlHw . . . 3726
dlHwAdm . . . 3726
iubLinkNodeBFunction . . . 3727
iubLinkUtranCell . . . 3727
operationalState . . . 3727
pmDchFramesOutOfSequenceUl . . . 3728
pmDlCredits_00 . . . 3728

Updated: 2009-07-22

pmDlCredits_01 3728
pmDlCredits_02 3729
pmDlCredits_03 3729
pmDlCredits_04 3729
pmDlCredits_05 3729
pmDlCredits_06 3730
pmDlCredits_07 3730
pmDlCredits_08 3730
pmDlCredits_09 3731
pmHsSevereCong 3731
pmIubLinkDynamicDelayMax 3731
pmIubLinkStaticDelay 3732
pmNoMtchTimingAdjContrFrames 3732
pmNoOfDiscardedNbapcMessages 3733
pmSamplesDlCredits 3733
pmSamplesUlCredits 3733
pmSumDlCredits 3734
pmSumSqrDlCredits 3734
pmSumSqrUlCredits 3734
pmSumUlCredits 3735
pmTotalTimeIubLinkCongestedDl 3735
pmTotalTimeIubLinkUnavail 3735
pmUlCredits_00 3736
pmUlCredits_01 3736
pmUlCredits_02 3736
pmUlCredits_03 3736
pmUlCredits_04 3737
pmUlCredits_05 3737
pmUlCredits_06 3737
pmUlCredits_07 3738
pmUlCredits_08 3738
pmUlCredits_09 3738
rbsId 3739
reservedBy 3739
rncModuleRef 3739
tpcPattern01CountDl 3739
ulHwAdm 3740
userLabel 3740
IuLink Primitive Calculations 3740
GRAPHmultiLineSeparator 3740
NUMDAYS 3740
NUMHOURS 3741
IuLink Peg Counts 3741
PERLENSEC 3741
PERLENSEC_K 3741
pmInFrames 3741
pmInLostFrames 3742
pmInOutOfSequenceFrames 3742
pmOutFrames 3743
IurLink Primitive Calculations 3743

© Copyright IBM Corp. 2008, 2009. All Rights Reserved.

GRAPHmultiLineSeparator . . . 3743
LocalName . . . 3743
NUMDAYS . . . 3743
NUMHOURS . . . 3743
IurLink Peg Counts . . . 3744
aliasPlmnIdentities . . . 3744
mcc . . . 3744
mnc . . . 3744
mncLength . . . 3744
PERLENSEC . . . 3745
PERLENSEC_K . . . 3745
pmDchFramesOutOfSequenceUl . . . 3745
pmEdchDataFrameDelayIub_00 . . . 3746
pmEdchDataFrameDelayIub_01 . . . 3746
pmEdchDataFrameDelayIub_02 . . . 3746
pmEdchDataFrameDelayIub_03 . . . 3747
pmEdchDataFrameDelayIub_04 . . . 3747
pmEdchDataFrameDelayIub_05 . . . 3747
pmEdchDataFrameDelayIub_06 . . . 3748
pmEdchDataFrameDelayIub_07 . . . 3748
pmEdchDataFrameDelayIub_08 . . . 3749
pmEdchDataFrameDelayIub_09 . . . 3749
pmEdchDataFrameDelayIub_10 . . . 3749
pmEdchDataFrameDelayIub_11 . . . 3750
pmEdchDataFrameDelayIub_12 . . . 3750
pmEdchDataFrameDelayIub_13 . . . 3750
pmEdchDataFrameDelayIub_14 . . . 3751
pmEdchDataFrameDelayIub_15 . . . 3751
pmEdchDataFramesLost . . . 3751
pmEdchDataFramesReceived . . . 3752
pmHsSevereCong . . . 3752
pmIurCommonControlFrames . . . 3752
pmIurCommonControlFramesFaulty . . . 3753
pmIurCommonDlFrames . . . 3753
pmIurCommonDlFramesFaulty . . . 3753
pmIurCommonEstAttExistTranspBearer . . . 3754
pmIurCommonEstAttNewTranspBearer . . . 3754
pmIurCommonEstSuccExistTranspBearer . . . 3754
pmIurCommonEstSuccNewTranspBearer . . . 3755
pmIurCommonFachControlFrames . . . 3755
pmIurCommonFachControlFrameTimeout . . . 3755
pmIurCommonFachDataFrames . . . 3756
pmIurCommonFachDataFramesFaulty . . . 3756
pmIurCommonRelease . . . 3756
pmIurCommonUlFrames . . . 3757
pmIurCommonUlFramesFaulty . . . 3757
pmIurTranspBearerRelease . . . 3757
pmNoAttIncCnhhoCsNonSpeech . . . 3758
pmNoAttIncCnhhoSpeech . . . 3758
pmNoNormalRabReleaseCs64 . . . 3758
pmNoNormalRabReleaseCsStream . . . 3758

Updated: 2009-07-22

pmNoNormalRabReleasePacket 3759
pmNoNormalRabReleasePacketStream 3759
pmNoNormalRabReleaseSpeech 3759
pmNoOfRlForDriftingUesPerDrnc 3759
pmNoSuccIncCnhhoCsNonSpeech 3760
pmNoSuccIncCnhhoSpeech 3760
pmNoSystemRabReleaseCs64 3760
pmNoSystemRabReleaseCsStream 3761
pmNoSystemRabReleasePacket 3761
pmNoSystemRabReleasePacketStream 3761
pmNoSystemRabReleaseSpeech 3761
RNC_RELEASE 3762
rncId 3762
synchRetransmissions 3762
synchTimeout 3762
userLabel 3763
LA_RNC Primitive Calculations 3763
GRAPHmultiLineSeparator 3763
NUMDAYS 3763
NUMHOURS 3763
LA_RNC Peg Counts 3763
att 3763
lac 3764
PERLENSEC 3764
PERLENSEC_K 3764
pmCnInitPagingToIdleUeLa 3765
reservedBy 3765
RNC_RELEASE 3765
t3212 3765
userLabel 3766
Licensing Primitive Calculations 3766
GRAPHmultiLineSeparator 3766
NUMDAYS 3766
NUMHOURS 3766
M3uAssociation_NodeB Primitive Calculations 3767
GRAPHmultiLineSeparator 3767
NUMDAYS 3767
NUMHOURS 3767
Payload_data_messages_received_per_second 3767
Payload_data_messages_sent_per_second 3767
M3uAssociation_NodeB Peg Counts 3767
PERLENSEC 3767
PERLENSEC_K 3768
pmNoOfAspacAckReceived 3768
pmNoOfAspacAckSent 3768
pmNoOfAspacReceived 3769
pmNoOfAspacSent 3769
pmNoOfAspdnAckReceived 3769
pmNoOfAspdnAckSent 3770
pmNoOfAspdnReceived 3770

© Copyright IBM Corp. 2008, 2009. All Rights Reserved.

pmNoOfAspdnSent . . . 3770
pmNoOfAspiaAckReceived . . . 3771
pmNoOfAspiaAckSent . . . 3771
pmNoOfAspiaReceived . . . 3771
pmNoOfAspiaSent . . . 3772
pmNoOfAspupAckReceived . . . 3772
pmNoOfAspupAckSent . . . 3772
pmNoOfAspupReceived . . . 3773
pmNoOfAspupSent . . . 3773
pmNoOfCommunicationLost . . . 3773
pmNoOfCongestion . . . 3774
pmNoOfDataMsgRec . . . 3774
pmNoOfDataMsgSent . . . 3774
pmNoOfDaudMsgSent . . . 3775
pmNoOfDaudReceived . . . 3775
pmNoOfDavaRec . . . 3775
pmNoOfDavaSent . . . 3776
pmNoOfDunaRec . . . 3776
pmNoOfDunaSent . . . 3776
pmNoOfDupuRec . . . 3777
pmNoOfDupuSent . . . 3777
pmNoOfErrorMsgRec . . . 3777
pmNoOfErrorMsgSent . . . 3778
pmNoOfM3uaDataMsgDiscarded . . . 3778
pmNoOfNotifyMsgRec . . . 3778
pmNoOfSconRec . . . 3778
pmNoOfSconSent . . . 3779
M3uAssociation_RNC Primitive Calculations . . . 3779
GRAPHmultiLineSeparator . . . 3779
NUMDAYS . . . 3779
NUMHOURS . . . 3779
Payload_data_messages_received_per_second . . . 3780
Payload_data_messages_sent_per_second . . . 3780
M3uAssociation_RNC Peg Counts . . . 3780
PERLENSEC . . . 3780
PERLENSEC_K . . . 3780
pmNoOfAspacAckReceived . . . 3781
pmNoOfAspacAckSent . . . 3781
pmNoOfAspacReceived . . . 3781
pmNoOfAspacSent . . . 3782
pmNoOfAspdnAckReceived . . . 3782
pmNoOfAspdnAckSent . . . 3782
pmNoOfAspdnReceived . . . 3783
pmNoOfAspdnSent . . . 3783
pmNoOfAspiaAckReceived . . . 3783
pmNoOfAspiaAckSent . . . 3784
pmNoOfAspiaReceived . . . 3784
pmNoOfAspiaSent . . . 3784
pmNoOfAspupAckReceived . . . 3785
pmNoOfAspupAckSent . . . 3785
pmNoOfAspupReceived . . . 3785

pmNoOfAspupSent 3786
pmNoOfCommunicationLost 3786
pmNoOfCongestion 3786
pmNoOfDataMsgRec 3786
pmNoOfDataMsgSent 3787
pmNoOfDaudMsgSent 3787
pmNoOfDaudReceived 3787
pmNoOfDavaRec 3788
pmNoOfDavaSent 3788
pmNoOfDunaRec 3788
pmNoOfDunaSent 3789
pmNoOfDupuRec 3789
pmNoOfDupuSent 3789
pmNoOfErrorMsgRec 3790
pmNoOfErrorMsgSent 3790
pmNoOfM3uaDataMsgDiscarded 3790
pmNoOfNotifyMsgRec 3791
pmNoOfSconRec 3791
pmNoOfSconSent 3791
MccService Primitive Calculations 3792
GRAPHmultiLineSeparator 3792
NUMDAYS 3792
NUMHOURS 3792
p_Seizures_Sucess_Rate 3792
MccService Peg Counts 3792
PERLENSEC 3792
pmForcedRelease 3793
pmNormalRelease 3793
pmTotalSeizures 3793
pmUnsuccSeizures 3794
RNC_RELEASE 3794
MediumAccUnit_NodeB Primitive Calculations 3794
GRAPHmultiLineSeparator 3794
NUMDAYS 3794
NUMHOURS 3795
MediumAccUnit_NodeB Peg Counts 3795
NodeB_RELEASE 3795
PERLENSEC 3795
PERLENSEC_K 3795
pmNoOfDot3StatsFCSErrors 3795
pmNoOfDot3StatsLateCollisions 3796
MediumAccUnit_RNC Primitive Calculations 3796
GRAPHmultiLineSeparator 3796
NUMDAYS 3796
NUMHOURS 3796
MediumAccUnit_RNC Peg Counts 3796
PERLENSEC 3797
PERLENSEC_K 3797
pmNoOfDot3StatsFCSErrors 3797
pmNoOfDot3StatsLateCollisions 3797

© Copyright IBM Corp. 2008, 2009. All Rights Reserved.

RNC_RELEASE . . . 3798
MfhService Primitive Calculations . . . 3798
GRAPHmultiLineSeparator . . . 3798
NUMDAYS . . . 3798
NUMHOURS . . . 3798
MfhService Peg Counts . . . 3798
PERLENSEC . . . 3798
RNC_RELEASE . . . 3799
MpcService Primitive Calculations . . . 3799
GRAPHmultiLineSeparator . . . 3799
NUMDAYS . . . 3799
NUMHOURS . . . 3799
p_Seizures_Sucess_Rate . . . 3799
MpcService Peg Counts . . . 3800
PERLENSEC . . . 3800
pmForcedRelease . . . 3800
pmNormalRelease . . . 3800
pmTotalSeizures . . . 3801
pmUnsuccSeizures . . . 3801
RNC_RELEASE . . . 3801
Mtp2Tp_NodeB Primitive Calculations . . . 3801
GRAPHmultiLineSeparator . . . 3802
NUMDAYS . . . 3802
NUMHOURS . . . 3802
Received_MSUs_per_second . . . 3802
Mtp2Tp_NodeB Peg Counts . . . 3802
PERLENSEC . . . 3802
PERLENSEC_K . . . 3802
pmLocalSIBTime . . . 3803
pmNoOfMSUReceived . . . 3803
pmNoOfNacks . . . 3803
pmNoOfReTransmittedOctets . . . 3804
pmNoOfSendBufferOctets . . . 3804
pmNoOfSIOSIFReceived . . . 3804
pmNoOfSIOSIFTransmitted . . . 3805
pmNoOfStartedRBCongestion . . . 3805
pmNoOfSuReceivedInError . . . 3805
pmRemoteSIBTime . . . 3806
Mtp2Tp_RNC Primitive Calculations . . . 3806
GRAPHmultiLineSeparator . . . 3806
NUMDAYS . . . 3806
NUMHOURS . . . 3806
Received_MSUs_per_second . . . 3806
Mtp2Tp_RNC Peg Counts . . . 3807
PERLENSEC . . . 3807
PERLENSEC_K . . . 3807
pmLocalSIBTime . . . 3807
pmNoOfMSUReceived . . . 3808
pmNoOfNacks . . . 3808
pmNoOfReTransmittedOctets . . . 3808

pmNoOfSendBufferOctets 3808
pmNoOfSIOSIFReceived 3809
pmNoOfSIOSIFTransmitted 3809
pmNoOfStartedRBCongestion 3809
pmNoOfSuReceivedInError 3810
pmRemoteSIBTime 3810
Mtp3bAp_NodeB Primitive Calculations 3810
GRAPHmultiLineSeparator 3810
NUMDAYS 3811
NUMHOURS 3811
Mtp3bAp_NodeB Peg Counts 3811
PERLENSEC 3811
PERLENSEC_K 3811
pmNoOfAdjacentSPNotAccessible 3812
pmNoOfUserPartUnavailRec 3812
Mtp3bAp_RNC Primitive Calculations 3812
GRAPHmultiLineSeparator 3812
NUMDAYS 3812
NUMHOURS 3813
Mtp3bAp_RNC Peg Counts 3813
PERLENSEC 3813
PERLENSEC_K 3813
pmNoOfAdjacentSPNotAccessible 3813
pmNoOfUserPartUnavailRec 3814
Mtp3bSl_NodeB Primitive Calculations 3814
GRAPHmultiLineSeparator 3814
NUMDAYS 3814
NUMHOURS 3814
Mtp3bSl_NodeB Peg Counts 3815
PERLENSEC 3815
PERLENSEC_K 3815
pmNoOfAALINServiceInd 3815
pmNoOfAALOUTInd 3816
pmNoOfCBDSent 3816
pmNoOfCOOXCOSent 3816
pmNoOfLocalLinkCongestCeaseRec 3817
pmNoOfLocalLinkCongestRec 3817
pmNoOfMSURec 3817
pmNoOfMSUSent 3818
Mtp3bSl_RNC Primitive Calculations 3818
GRAPHmultiLineSeparator 3818
NUMDAYS 3818
NUMHOURS 3818
Mtp3bSl_RNC Peg Counts 3818
PERLENSEC 3818
PERLENSEC_K 3819
pmNoOfAALINServiceInd 3819
pmNoOfAALOUTInd 3819
pmNoOfCBDSent 3820
pmNoOfCOOXCOSent 3820

© Copyright IBM Corp. 2008, 2009. All Rights Reserved.

pmNoOfLocalLinkCongestCeaseRec 3820
pmNoOfLocalLinkCongestRec 3821
pmNoOfMSURec 3821
pmNoOfMSUSent 3821
Mtp3bSls_NodeB Primitive Calculations 3822
GRAPHmultiLineSeparator 3822
NUMDAYS 3822
NUMHOURS 3822
Mtp3bSls_RNC Primitive Calculations 3822
GRAPHmultiLineSeparator 3822
NUMDAYS 3822
NUMHOURS 3823
Mtp3bSp_NodeB Primitive Calculations 3823
GRAPHmultiLineSeparator 3823
NUMDAYS 3823
NUMHOURS 3823
Mtp3bSp_NodeB Peg Counts 3823
PERLENSEC 3823
PERLENSEC_K 3824
pmNoOfCBARec 3824
pmNoOfCBASent 3824
pmNoOfChangeBackDeclRec 3825
pmNoOfChangeOverRec 3825
pmNoOfCOAXCARec 3825
pmNoOfCOAXCASent 3826
pmNoOfControlledRerouteSuccessPerf 3826
pmNoOfECARec 3826
pmNoOfECASent 3827
pmNoOfECOSent 3827
pmNoOfEmergencyChangeOverRec 3827
pmNoOfForcedRerouteSuccessPerf 3827
pmNoOfInAssEstReqInStDownWhStEstIsBlck 3828
pmNoOfMaxTrialsForAssocActivReached 3828
pmNoOfMaxTrialsForAssocEstabReached 3828
pmNoOfSctpAssociationRestart 3829
pmNoOfSctpBufOverflow 3829
pmNoOfSctpCommunicationErr 3829
pmNoOfSctpNetworkStatusChange 3830
pmNoOfSctpResumeSending 3830
pmNoOfSctpSendFailure 3830
pmNoOfSLTAFirstTimeOutRec 3831
pmNoOfSLTASecondTimeOutRec 3831
pmNoOfSuccessAssocAbort 3831
pmNoOfSuccessAssocEstablish 3832
pmNoOfTimerT21WasStarted 3832
pmNoOfTRARec 3832
pmNoOfTRASent 3833
pmNoOfUnsuccessAssocEstablish 3833
pmNoOfUnsuccessAssocShutDown 3833
pmNoOfUnsuccessForcedRerouting 3833

pmNoOfUPMsgDiscardedDueToRoutingErr 3834
Mtp3bSp_RNC Primitive Calculations 3834
GRAPHmultiLineSeparator 3834
NUMDAYS 3834
NUMHOURS 3834
Mtp3bSp_RNC Peg Counts 3835
PERLENSEC 3835
PERLENSEC_K 3835
pmNoOfCBARec 3835
pmNoOfCBASent 3836
pmNoOfChangeBackDeclRec 3836
pmNoOfChangeOverRec 3836
pmNoOfCOAXCARec 3837
pmNoOfCOAXCASent 3837
pmNoOfControlledRerouteSuccessPerf 3837
pmNoOfECARec 3838
pmNoOfECASent 3838
pmNoOfECOSent 3838
pmNoOfEmergencyChangeOverRec 3839
pmNoOfForcedRerouteSuccessPerf 3839
pmNoOfInAssEstReqInStDownWhStEstIsBlck 3839
pmNoOfMaxTrialsForAssocActivReached 3840
pmNoOfMaxTrialsForAssocEstabReached 3840
pmNoOfSctpAssociationRestart 3840
pmNoOfSctpBufOverflow 3840
pmNoOfSctpCommunicationErr 3841
pmNoOfSctpNetworkStatusChange 3841
pmNoOfSctpResumeSending 3841
pmNoOfSctpSendFailure 3842
pmNoOfSLTAFirstTimeOutRec 3842
pmNoOfSLTASecondTimeOutRec 3842
pmNoOfSuccessAssocAbort 3843
pmNoOfSuccessAssocEstablish 3843
pmNoOfTimerT21WasStarted 3843
pmNoOfTRARec 3844
pmNoOfTRASent 3844
pmNoOfUnsuccessAssocEstablish 3844
pmNoOfUnsuccessAssocShutDown 3845
pmNoOfUnsuccessForcedRerouting 3845
pmNoOfUPMsgDiscardedDueToRoutingErr 3845
Mtp3bSrs_NodeB Primitive Calculations 3845
GRAPHmultiLineSeparator 3846
NUMDAYS 3846
NUMHOURS 3846
Mtp3bSrs_NodeB Peg Counts 3846
pmNoOfDiscardedMsgFromBroadToNarrow 3846
pmNoOfSecsAccRouteSetUnavailable 3846
Mtp3bSrs_RNC Primitive Calculations 3847
GRAPHmultiLineSeparator 3847
NUMDAYS 3847

© Copyright IBM Corp. 2008, 2009. All Rights Reserved.

NUMHOURS . . . 3847
Mtp3bSrs_RNC Peg Counts . . . 3847
pmNoOfDiscardedMsgFromBroadToNarrow . . . 3847
pmNoOfSecsAccRouteSetUnavailable . . . 3848
NbapCommon Primitive Calculations . . . 3848
GRAPHmultiLineSeparator . . . 3848
LocalName . . . 3848
NUMDAYS . . . 3848
NUMHOURS . . . 3848
NbapCommon Peg Counts . . . 3849
activeUniSaalTpRef . . . 3849
administrativeState . . . 3849
availabilityStatus . . . 3849
l2EstablishReqRetryT . . . 3850
operationalState . . . 3850
PERLENSEC . . . 3850
PERLENSEC_K . . . 3850
pmNoOfDiscardedMsg . . . 3851
pmNoOfDiscardedNbapMessages . . . 3851
RNC_RELEASE . . . 3851
standbyUniSaalTpRef . . . 3852
userLabel . . . 3852
NbapDedicated Primitive Calculations . . . 3852
GRAPHmultiLineSeparator . . . 3852
NUMDAYS . . . 3852
NUMHOURS . . . 3853
NbapDedicated Peg Counts . . . 3853
activeUniSaalTpRef . . . 3853
administrativeState . . . 3853
l2EstablishReqRetryT . . . 3853
PERLENSEC . . . 3854
PERLENSEC_K . . . 3854
standbyUniSaalTpRef . . . 3854
userLabel . . . 3855
NniSaalTp_NodeB Primitive Calculations . . . 3855
GRAPHmultiLineSeparator . . . 3855
NUMDAYS . . . 3855
NUMHOURS . . . 3855
NniSaalTp_NodeB Peg Counts . . . 3856
NodeB_RELEASE . . . 3856
PERLENSEC . . . 3856
PERLENSEC_K . . . 3856
pmLinkInServiceTime . . . 3857
pmNoOfAlignmentFailures . . . 3857
pmNoOfAllSLFailures . . . 3857
pmNoOfLocalCongestions . . . 3858
pmNoOfNoResponses . . . 3858
pmNoOfOtherErrors . . . 3858
pmNoOfProtocolErrors . . . 3858
pmNoOfReceivedSDUs . . . 3859

pmNoOfRemoteCongestions 3859
pmNoOfSentSDUs 3859
pmNoOfSequenceDataLosses 3860
pmNoOfUnsuccReTransmissions 3860
NniSaalTp_RNC Primitive Calculations 3860
GRAPHmultiLineSeparator 3860
NUMDAYS 3861
NUMHOURS 3861
NniSaalTp_RNC Peg Counts 3861
PERLENSEC 3861
PERLENSEC_K 3861
pmLinkInServiceTime 3862
pmNoOfAlignmentFailures 3862
pmNoOfAllSLFailures 3862
pmNoOfLocalCongestions 3862
pmNoOfNoResponses 3863
pmNoOfOtherErrors 3863
pmNoOfProtocolErrors 3863
pmNoOfReceivedSDUs 3864
pmNoOfRemoteCongestions 3864
pmNoOfSentSDUs 3864
pmNoOfSequenceDataLosses 3865
pmNoOfUnsuccReTransmissions 3865
RNC_RELEASE 3865
NodeB Primitive Calculations 3865
GRAPHmultiLineSeparator 3866
NUMDAYS 3866
NUMHOURS 3866
Vpc_ErrBlock%_Received 3866
NodeB Peg Counts 3866
accuracy 3866
controlFrameT 3867
nodeBFunctionIubLink 3867
noOfRetries 3867
noOfSamples 3867
phaseDiffThreshold 3868
phaseMeasurement 3868
pmCapacityNodeBDlCe_00 3868
pmCapacityNodeBDlCe_01 3868
pmCapacityNodeBDlCe_02 3869
pmCapacityNodeBDlCe_03 3869
pmCapacityNodeBDlCe_04 3869
pmCapacityNodeBDlCe_05 3870
pmCapacityNodeBDlCe_06 3870
pmCapacityNodeBDlCe_07 3870
pmCapacityNodeBDlCe_08 3871
pmCapacityNodeBDlCe_09 3871
pmCapacityNodeBDlCe_10 3871
pmCapacityNodeBUlCe_00 3872
pmCapacityNodeBUlCe_01 3872

© Copyright IBM Corp. 2008, 2009. All Rights Reserved.

pmCapacityNodeBUlCe_02 . . . 3872
pmCapacityNodeBUlCe_03 . . . 3873
pmCapacityNodeBUlCe_04 . . . 3873
pmCapacityNodeBUlCe_05 . . . 3873
pmCapacityNodeBUlCe_06 . . . 3874
pmCapacityNodeBUlCe_07 . . . 3874
pmCapacityNodeBUlCe_08 . . . 3874
pmCapacityNodeBUlCe_09 . . . 3875
pmCapacityNodeBUlCe_10 . . . 3875
pmNoOfDscMsg . . . 3875
pmTotTmIubLnCongUl . . . 3876
qEval . . . 3876
reservedBy . . . 3876
supervisionIntervalT . . . 3877
timeStamp . . . 3877
userLabel . . . 3877
userLabel_CM . . . 3877
NodeSynchTp Primitive Calculations . . . 3878
GRAPHmultiLineSeparator . . . 3878
NUMDAYS . . . 3878
NUMHOURS . . . 3878
NodeSynchTp Peg Counts . . . 3878
aal0TpRefs_1 . . . 3878
aal0TpRefs_2 . . . 3879
administrativeState . . . 3879
nodeSynchRef . . . 3879
PERLENSEC . . . 3880
PERLENSEC_K . . . 3880
timDeviceRef . . . 3880
userLabel . . . 3881
NrService Primitive Calculations . . . 3881
GRAPHmultiLineSeparator . . . 3881
NUMDAYS . . . 3881
NUMHOURS . . . 3881
p_Seizures_Sucess_Rate . . . 3882
NrService Peg Counts . . . 3882
PERLENSEC . . . 3882
pmForcedRelease . . . 3882
pmNormalRelease . . . 3882
pmTotalSeizures . . . 3883
pmUnsuccSeizures . . . 3883
RNC_RELEASE . . . 3883
Os155PhyPathTrm_NodeB Primitive Calculations . . . 3884
GRAPHmultiLineSeparator . . . 3884
NUMDAYS . . . 3884
NUMHOURS . . . 3884
Phy_Errored_Ratio_Multiplexer_NodeB . . . 3884
Os155PhyPathTrm_NodeB Peg Counts . . . 3884
NodeB_RELEASE . . . 3884
PERLENSEC . . . 3884

Updated: 2009-07-22

PERLENSEC_K . . . 3885
pmMsBbe . . . 3885
pmMsEs . . . 3885
pmMsSes . . . 3886
pmMsUas . . . 3886
pmVc4Es . . . 3886
pmVc4Ses . . . 3886
Os155PhyPathTrm_RNC Primitive Calculations . . . 3887
GRAPHmultiLineSeparator . . . 3887
NUMDAYS . . . 3887
NUMHOURS . . . 3887
Phy_Errored_Ratio_Multiplexer_RNC . . . 3887
Os155PhyPathTrm_RNC Peg Counts . . . 3887
PERLENSEC . . . 3887
PERLENSEC_K . . . 3888
pmMsBbe . . . 3888
pmMsEs . . . 3888
pmMsSes . . . 3888
pmMsUas . . . 3889
RNC_RELEASE . . . 3889
Ospf_NodeB Primitive Calculations . . . 3889
GRAPHmultiLineSeparator . . . 3889
NUMDAYS . . . 3889
NUMHOURS . . . 3889
Ospf_NodeB Peg Counts . . . 3890
NodeB_RELEASE . . . 3890
PERLENSEC . . . 3890
PERLENSEC_K . . . 3890
pmNoOfOspfOriginateNewLsas . . . 3891
pmNoOfOspfRxNewLsas . . . 3891
Ospf_RNC Primitive Calculations . . . 3891
GRAPHmultiLineSeparator . . . 3891
NUMDAYS . . . 3891
NUMHOURS . . . 3892
Ospf_RNC Peg Counts . . . 3892
PERLENSEC . . . 3892
PERLENSEC_K . . . 3892
pmNoOfOspfOriginateNewLsas . . . 3892
pmNoOfOspfRxNewLsas . . . 3893
RNC_RELEASE . . . 3893
OspfArea_NodeB Primitive Calculations . . . 3893
GRAPHmultiLineSeparator . . . 3893
NUMDAYS . . . 3894
NUMHOURS . . . 3894
OspfArea_NodeB Peg Counts . . . 3894
NodeB_RELEASE . . . 3894
PERLENSEC . . . 3894
PERLENSEC_K . . . 3894
pmNoOfOspfSpfRuns . . . 3895
OspfArea_RNC Primitive Calculations . . . 3895

© Copyright IBM Corp. 2008, 2009. All Rights Reserved.

GRAPHmultiLineSeparator . . . 3895
NUMDAYS . . . 3895
NUMHOURS . . . 3895
OspfArea_RNC Peg Counts . . . 3896
PERLENSEC . . . 3896
PERLENSEC_K . . . 3896
pmNoOfOspfSpfRuns . . . 3896
RNC_RELEASE . . . 3897
OspfInterface_NodeB Primitive Calculations . . . 3897
GRAPHmultiLineSeparator . . . 3897
NUMDAYS . . . 3897
NUMHOURS . . . 3897
OspfInterface_NodeB Peg Counts . . . 3897
NodeB_RELEASE . . . 3898
PERLENSEC . . . 3898
PERLENSEC_K . . . 3898
pmNoOfOspfIfEvents . . . 3898
OspfInterface_RNC Primitive Calculations . . . 3899
GRAPHmultiLineSeparator . . . 3899
NUMDAYS . . . 3899
NUMHOURS . . . 3899
OspfInterface_RNC Peg Counts . . . 3899
PERLENSEC . . . 3899
PERLENSEC_K . . . 3900
pmNoOfOspfIfEvents . . . 3900
RNC_RELEASE . . . 3900
PacketDataRouter Primitive Calculations . . . 3901
GRAPHmultiLineSeparator . . . 3901
NUMDAYS . . . 3901
NUMHOURS . . . 3901
PacketDataRouter Peg Counts . . . 3901
administrativeState . . . 3901
availabilityStatus . . . 3902
operationalState . . . 3902
pdrDeviceRef . . . 3902
PERLENSEC . . . 3902
PERLENSEC_K . . . 3903
pmNoFaultyIpPackets . . . 3903
pmNoRoutedIpBytesDl . . . 3903
pmNoRoutedIpBytesUl . . . 3904
pmNoRoutedIpPacketsDl . . . 3904
pmNoRoutedIpPacketsUl . . . 3904
pmSamplesPacketDataRab . . . 3905
pmSumPacketDataRab . . . 3905
RNC_RELEASE . . . 3905
timeToLive . . . 3905
userLabel . . . 3906
PacketDataRouter_RNC Primitive Calculations . . . 3906
GRAPHmultiLineSeparator . . . 3906
NUMDAYS . . . 3906

Updated: 2009-07-22

NUMHOURS 3906
PacketDataRouter_RNC Peg Counts 3906
PERLENSEC 3906
PERLENSEC_K 3907
pmNoFaultyIpPackets 3907
pmNoRoutedIpBytesDl 3907
pmNoRoutedIpBytesUl 3908
pmNoRoutedIpPacketsDl 3908
pmNoRoutedIpPacketsUl 3908
pmSamplesPacketDataRab 3909
pmSumPacketDataRab 3909
PdrDevice Primitive Calculations 3909
GRAPHmultiLineSeparator 3909
NUMDAYS 3910
NUMHOURS 3910
PdrDevice Peg Counts 3910
PERLENSEC 3910
PERLENSEC_K 3910
pmSamplesMeasuredPdrSpLoad 3911
pmSumMeasuredPdrSpLoad 3911
PdrDevice_NodeB Primitive Calculations 3911
GRAPHmultiLineSeparator 3911
NUMDAYS 3911
NUMHOURS 3912
PdrDevice_NodeB Peg Counts 3912
PERLENSEC 3912
PERLENSEC_K 3912
pmSamplesMeasuredPdrSpLoad 3912
pmSumMeasuredPdrSpLoad 3913
RNC_RELEASE 3913
PdrDevice_RNC Primitive Calculations 3913
GRAPHmultiLineSeparator 3913
NUMDAYS 3914
NUMHOURS 3914
PdrDevice_RNC Peg Counts 3914
PERLENSEC 3914
PERLENSEC_K 3914
pmSamplesMeasuredPdrSpLoad 3915
pmSumMeasuredPdrSpLoad 3915
RNC_RELEASE 3915
PlugInUnit_NodeB Primitive Calculations 3915
GRAPHmultiLineSeparator 3916
NUMDAYS 3916
NUMHOURS 3916
PlugInUnit_NodeB Peg Counts 3916
NodeB_RELEASE 3916
PERLENSEC 3916
PERLENSEC_K 3917
pmProcessorLoad 3917
PlugInUnit_RNC Primitive Calculations 3917

© Copyright IBM Corp. 2008, 2009. All Rights Reserved.

GRAPHmultiLineSeparator . . . 3917
NUMDAYS . . . 3918
NUMHOURS . . . 3918
PlugInUnit_RNC Peg Counts . . . 3918
PERLENSEC . . . 3918
PERLENSEC_K . . . 3918
pmProcessorLoad . . . 3919
RNC_RELEASE . . . 3919
PostServClass Primitive Calculations . . . 3919
GRAPHmultiLineSeparator . . . 3919
NUMDAYS . . . 3919
NUMHOURS . . . 3919
PostServClass Peg Counts . . . 3920
PERLENSEC . . . 3920
PERLENSEC_K . . . 3920
pmAgpsAttempt . . . 3920
pmAgpsSuccQoSNotOk . . . 3921
pmAgpsSuccQosOk . . . 3921
pmCellIdAttempt . . . 3921
pmCellIdSuccQosNotOk . . . 3922
pmCellIdSuccQosOk . . . 3922
pmRttAttempt . . . 3922
pmRttSuccQosNotOk . . . 3923
pmRttSuccQosOk . . . 3923
Prach Primitive Calculations . . . 3924
GRAPHmultiLineSeparator . . . 3924
NUMDAYS . . . 3924
NUMHOURS . . . 3924
Prach Peg Counts . . . 3924
NodeB_RELEASE . . . 3924
PERLENSEC . . . 3924
PERLENSEC_K . . . 3925
pmNoPreambleFalseDetection . . . 3925
pmPropagationDelay_00 . . . 3925
pmPropagationDelay_01 . . . 3926
pmPropagationDelay_02 . . . 3926
pmPropagationDelay_03 . . . 3926
pmPropagationDelay_04 . . . 3927
pmPropagationDelay_05 . . . 3927
pmPropagationDelay_06 . . . 3928
pmPropagationDelay_07 . . . 3928
pmPropagationDelay_08 . . . 3928
pmPropagationDelay_09 . . . 3929
pmPropagationDelay_10 . . . 3929
pmPropagationDelay_11 . . . 3929
pmPropagationDelay_12 . . . 3930
pmPropagationDelay_13 . . . 3930
pmPropagationDelay_14 . . . 3930
pmPropagationDelay_15 . . . 3931
pmPropagationDelay_16 . . . 3931

pmPropagationDelay_17 3932
pmPropagationDelay_18 3932
pmPropagationDelay_19 3932
pmPropagationDelay_20 3933
pmPropagationDelay_21 3933
pmPropagationDelay_22 3933
pmPropagationDelay_23 3934
pmPropagationDelay_24 3934
pmPropagationDelay_25 3934
pmPropagationDelay_26 3935
pmPropagationDelay_27 3935
pmPropagationDelay_28 3936
pmPropagationDelay_29 3936
pmPropagationDelay_30 3936
pmPropagationDelay_31 3937
pmPropagationDelay_32 3937
pmPropagationDelay_33 3937
pmPropagationDelay_34 3938
pmPropagationDelay_35 3938
pmPropagationDelay_36 3938
pmPropagationDelay_37 3939
pmPropagationDelay_38 3939
pmPropagationDelay_39 3940
pmPropagationDelay_40 3940
pmReceivedPreambleSir_00 3940
pmReceivedPreambleSir_01 3941
pmReceivedPreambleSir_02 3941
pmReceivedPreambleSir_03 3941
pmReceivedPreambleSir_04 3942
pmReceivedPreambleSir_05 3942
pmReceivedPreambleSir_06 3942
pmReceivedPreambleSir_07 3943
pmReceivedPreambleSir_08 3943
pmReceivedPreambleSir_09 3944
pmReceivedPreambleSir_10 3944
pmReceivedPreambleSir_11 3944
pmReceivedPreambleSir_12 3945
pmReceivedPreambleSir_13 3945
pmReceivedPreambleSir_14 3945
pmReceivedPreambleSir_15 3946
pmReceivedPreambleSir_16 3946
pmReceivedPreambleSir_17 3946
pmReceivedPreambleSir_18 3947
pmReceivedPreambleSir_19 3947
pmReceivedPreambleSir_20 3948
pmReceivedPreambleSir_21 3948
pmReceivedPreambleSir_22 3948
pmReceivedPreambleSir_23 3949
pmReceivedPreambleSir_24 3949
pmReceivedPreambleSir_25 3949
pmReceivedPreambleSir_26 3950

© Copyright IBM Corp. 2008, 2009. All Rights Reserved.

pmSuccReceivedBlocks . . . 3950
pmUnsuccReceivedBlocks . . . 3950
RA_RNC Primitive Calculations . . . 3951
GRAPHmultiLineSeparator . . . 3951
NUMDAYS . . . 3951
NUMHOURS . . . 3951
RA_RNC Peg Counts . . . 3951
nmo . . . 3951
PERLENSEC . . . 3952
PERLENSEC_K . . . 3952
pmCnInitPagingToIdleUeRa . . . 3952
rac . . . 3953
reservedBy . . . 3953
RNC_RELEASE . . . 3953
userLabel . . . 3953
RABType Primitive Calculations . . . 3954
Avr_PS_RAB_STBL_SUCC_RATE . . . 3954
GRAPHmultiLineSeparator . . . 3954
k_PAYLOAD_DL_TOT . . . 3954
k_PAYLOAD_UL_TOT . . . 3954
k_RAB_EST_FAIL . . . 3954
k_RAB_EST_FAIL_RATE . . . 3955
k_RAB_REL_FAIL . . . 3955
k_RAB_REL_FAIL_RATE . . . 3955
NUMDAYS . . . 3955
NUMHOURS . . . 3955
Uplink_BLER . . . 3955
Uplink_PS_Streaming_BLER . . . 3955
Uplink_Speech_BLER . . . 3956
RABType Peg Counts . . . 3956
PERLENSEC . . . 3956
PERLENSEC_K . . . 3956
pmDlDchTrafficVolumeBeforeSplit . . . 3956
pmDlFachTrafficVolume . . . 3957
pmFaultyTransportBlocksAcUl . . . 3957
pmNoRabEstablishAttempts . . . 3957
pmNoRabEstablishSuccess . . . 3958
pmNoRabReleaseAttempts . . . 3958
pmNoRabReleaseSuccess . . . 3958
pmSamplesRabEstablish . . . 3959
pmSumRabEstablish . . . 3959
pmTransportBlocksAcUl . . . 3959
pmUlDchTrafficVolumeAfterComb . . . 3960
pmUlRachTrafficVolume . . . 3960
reservedBy . . . 3960
RNC_RELEASE . . . 3960
userLabel . . . 3961
RACH Primitive Calculations . . . 3961
GRAPHmultiLineSeparator . . . 3961
NUMDAYS . . . 3961

NUMHOURS 3961
RACH Peg Counts 3961
administrativeState 3962
aichPower 3962
aichTransmissionTiming 3962
availabilityStatus 3962
constantValueCprach 3963
maxPreambleCycle 3963
NodeB_RELEASE 3963
operationalState 3963
PERLENSEC 3964
PERLENSEC_K 3964
pmFaultyTransportBlocks 3964
pmNoRecRandomAccSuccess 3965
pmTransportBlocks 3965
powerOffsetP0 3965
powerOffsetPpm 3965
preambleRetransMax 3966
preambleSignatures 3966
preambleThreshold 3966
scramblingCodeWordNo 3966
spreadingFactor 3967
subChannelNo 3967
userLabel 3967
RadioLinks Primitive Calculations 3967
GRAPHmultiLineSeparator 3968
NUMDAYS 3968
NUMHOURS 3968
pmAverageSirErrorP5MD_01 3968
pmAverageSirErrorP5MD_02 3968
pmAverageSirErrorP5MD_03 3968
pmAverageSirErrorP5MD_04 3969
pmAverageSirErrorP5MD_05 3969
pmAverageSirErrorP5MD_06 3969
pmAverageSirErrorP5MD_07 3969
pmAverageSirErrorP5MD_08 3969
pmAverageSirErrorP5MD_09 3970
pmAverageSirErrorP5MD_10 3970
pmAverageSirErrorP5MD_11 3970
pmAverageSirErrorP5MD_12 3970
pmAverageSirErrorP5MD_13 3971
pmAverageSirErrorP5MD_14 3971
pmAverageSirErrorP5MD_15 3971
pmAverageSirErrorP5MD_16 3971
pmAverageSirErrorP5MD_17 3971
pmAverageSirErrorP5MD_18 3972
pmAverageSirErrorP5MD_19 3972
pmAverageSirErrorP5MD_20 3972
pmAverageSirErrorP5MD_21 3972
pmAverageSirErrorP5MD_22 3972
pmAverageSirErrorP5MD_23 3973

© Copyright IBM Corp. 2008, 2009. All Rights Reserved.

pmAverageSirErrorP5MD_24 3973
pmAverageSirErrorP5MD_25 3973
pmAverageSirErrorP5MD_26 3973
pmAverageSirErrorP5MD_27 3974
pmAverageSirErrorP5MD_28 3974
pmAverageSirErrorP5MD_29 3974
pmAverageSirErrorP5MD_30 3974
pmAverageSirErrorP5MD_31 3974
pmAverageSirErrorP5MD_32 3975
pmAverageSirErrorP5MD_33 3975
pmAverageSirErrorP5MD_34 3975
pmAverageSirErrorP5MD_35 3975
pmAverageSirErrorP5MD_36 3975
pmAverageSirErrorP5MD_37 3976
pmAverageSirErrorP5MD_38 3976
pmAverageSirErrorP5MD_39 3976
pmAverageSirErrorP5MD_40 3976
pmAverageSirP5MD_01 3977
pmAverageSirP5MD_02 3977
pmAverageSirP5MD_03 3977
pmAverageSirP5MD_04 3977
pmAverageSirP5MD_05 3977
pmAverageSirP5MD_06 3977
pmAverageSirP5MD_07 3977
pmAverageSirP5MD_08 3978
pmAverageSirP5MD_09 3978
pmAverageSirP5MD_10 3978
pmAverageSirP5MD_11 3978
pmAverageSirP5MD_12 3978
pmAverageSirP5MD_13 3978
pmAverageSirP5MD_14 3978
pmAverageSirP5MD_15 3979
pmAverageSirP5MD_16 3979
pmAverageSirP5MD_17 3979
pmAverageSirP5MD_18 3979
pmAverageSirP5MD_19 3979
pmAverageSirP5MD_20 3979
pmAverageSirP5MD_21 3979
pmAverageSirP5MD_22 3980
pmAverageSirP5MD_23 3980
pmAverageSirP5MD_24 3980
pmAverageSirP5MD_25 3980
pmAverageSirP5MD_26 3980
pmAverageSirP5MD_27 3980
pmAverageSirP5MD_28 3980
pmAverageSirP5MD_29 3981
pmAverageSirP5MD_30 3981
pmAverageSirP5MD_31 3981
pmAverageSirP5MD_32 3981
pmAverageSirP5MD_33 3981
pmAverageSirP5MD_34 3981

Updated: 2009-07-22

pmAverageSirP5MD_35 3981
pmAverageSirP5MD_36 3982
RadioLinks Peg Counts 3982
NodeB_RELEASE 3982
PERLENSEC 3982
PERLENSEC_K 3982
pmAverageSir_00 3983
pmAverageSir_01 3983
pmAverageSir_02 3983
pmAverageSir_03 3984
pmAverageSir_04 3984
pmAverageSir_05 3984
pmAverageSir_06 3985
pmAverageSir_07 3985
pmAverageSir_08 3985
pmAverageSir_09 3986
pmAverageSir_10 3986
pmAverageSir_11 3986
pmAverageSir_12 3986
pmAverageSir_13 3987
pmAverageSir_14 3987
pmAverageSir_15 3987
pmAverageSir_16 3988
pmAverageSir_17 3988
pmAverageSir_18 3988
pmAverageSir_19 3989
pmAverageSir_20 3989
pmAverageSir_21 3989
pmAverageSir_22 3990
pmAverageSir_23 3990
pmAverageSir_24 3990
pmAverageSir_25 3990
pmAverageSir_26 3991
pmAverageSir_27 3991
pmAverageSir_28 3991
pmAverageSir_29 3992
pmAverageSir_30 3992
pmAverageSir_31 3992
pmAverageSir_32 3993
pmAverageSir_33 3993
pmAverageSir_34 3993
pmAverageSir_35 3994
pmAverageSir_36 3994
pmAverageSir_37 3994
pmAverageSir_38 3994
pmAverageSir_39 3995
pmAverageSir_40 3995
pmAverageSir_41 3995
pmAverageSir_42 3996
pmAverageSir_43 3996
pmAverageSir_44 3996

© Copyright IBM Corp. 2008, 2009. All Rights Reserved.

pmAverageSir_45 3997
pmAverageSir_46 3997
pmAverageSir_47 3997
pmAverageSir_48 3998
pmAverageSir_49 3998
pmAverageSir_50 3998
pmAverageSir_51 3998
pmAverageSir_52 3999
pmAverageSir_53 3999
pmAverageSir_54 3999
pmAverageSir_55 4000
pmAverageSir_56 4000
pmAverageSir_57 4000
pmAverageSir_58 4001
pmAverageSir_59 4001
pmAverageSir_60 4001
pmAverageSir_61 4002
pmAverageSir_62 4002
pmAverageSir_63 4002
pmAverageSirError_01 4003
pmAverageSirError_02 4003
pmAverageSirError_03 4003
pmAverageSirError_04 4003
pmAverageSirError_05 4003
pmAverageSirError_06 4003
pmAverageSirError_07 4003
pmAverageSirError_08 4003
pmAverageSirError_09 4003
pmAverageSirError_10 4003
pmAverageSirError_11 4004
pmAverageSirError_12 4004
pmAverageSirError_13 4004
pmAverageSirError_14 4004
pmAverageSirError_15 4004
pmAverageSirError_16 4004
pmAverageSirError_17 4004
pmAverageSirError_18 4004
pmAverageSirError_19 4004
pmAverageSirError_20 4004
pmAverageSirError_21 4005
pmAverageSirError_22 4005
pmAverageSirError_23 4005
pmAverageSirError_24 4005
pmAverageSirError_25 4005
pmAverageSirError_26 4005
pmAverageSirError_27 4005
pmAverageSirError_28 4005
pmAverageSirError_29 4005
pmAverageSirError_30 4005
pmAverageSirError_31 4006
pmAverageSirError_32 4006

Updated: 2009-07-22

pmAverageSirError_33 4006
pmAverageSirError_34 4006
pmAverageSirError_35 4006
pmAverageSirError_36 4006
pmAverageSirError_37 4006
pmAverageSirError_38 4006
pmAverageSirError_39 4006
pmAverageSirError_40 4006
pmAverageSirError_41 4007
pmAverageSirError_42 4007
pmAverageSirError_43 4007
pmAverageSirError_44 4007
pmAverageSirError_45 4007
pmAverageSirError_46 4007
pmAverageSirError_47 4007
pmAverageSirError_48 4007
pmAverageSirError_49 4007
pmAverageSirError_50 4007
pmAverageSirError_51 4008
pmAverageSirError_52 4008
pmAverageSirError_53 4008
pmAverageSirError_54 4008
pmAverageSirError_55 4008
pmAverageSirError_56 4008
pmAverageSirError_57 4008
pmAverageSirError_58 4008
pmAverageSirError_59 4008
pmAverageSirError_60 4008
pmAverageSirError_61 4009
pmAverageSirError_62 4009
pmAverageSirError_63 4009
pmAverageSirErrorP5MD_00 4009
pmAverageSirErrorP5MD_41 4009
pmAverageSirP5MD_00 4010
pmAverageSirP5MD_37 4010
pmBranchDeltaSir_00 4010
pmBranchDeltaSir_01 4011
pmBranchDeltaSir_02 4011
pmBranchDeltaSir_03 4011
pmBranchDeltaSir_04 4012
pmBranchDeltaSir_05 4012
pmBranchDeltaSir_06 4012
pmBranchDeltaSir_07 4013
pmBranchDeltaSir_08 4013
pmBranchDeltaSir_09 4013
pmBranchDeltaSir_10 4014
pmBranchDeltaSir_11 4014
pmBranchDeltaSir_12 4014
pmBranchDeltaSir_13 4015
pmBranchDeltaSir_14 4015
pmBranchDeltaSir_15 4015

© Copyright IBM Corp. 2008, 2009. All Rights Reserved.

pmBranchDeltaSir_16 4016
pmBranchDeltaSir_17 4016
pmBranchDeltaSir_18 4016
pmBranchDeltaSir_19 4017
pmBranchDeltaSir_20 4017
pmBranchDeltaSir_21 4017
pmBranchDeltaSir_22 4018
pmBranchDeltaSir_23 4018
pmBranchDeltaSir_24 4018
pmBranchDeltaSir_25 4019
pmBranchDeltaSir_26 4019
pmBranchDeltaSir_27 4019
pmBranchDeltaSir_28 4020
pmBranchDeltaSir_29 4020
pmBranchDeltaSir_30 4020
pmBranchDeltaSir_31 4021
pmBranchDeltaSir_32 4021
pmBranchDeltaSir_33 4021
pmBranchDeltaSir_34 4022
pmBranchDeltaSir_35 4022
pmBranchDeltaSir_36 4022
pmBranchDeltaSir_37 4023
pmBranchDeltaSir_38 4023
pmBranchDeltaSir_39 4023
pmBranchDeltaSir_40 4024
pmBranchDeltaSir_41 4024
pmBranchDeltaSir_42 4024
pmBranchDeltaSir_43 4025
pmBranchDeltaSir_44 4025
pmBranchDeltaSir_45 4025
pmBranchDeltaSir_46 4026
pmBranchDeltaSir_47 4026
pmBranchDeltaSir_48 4026
pmBranchDeltaSir_49 4027
pmBranchDeltaSir_50 4027
pmBranchDeltaSir_51 4027
pmBranchDeltaSir_52 4028
pmBranchDeltaSir_53 4028
pmBranchDeltaSir_54 4028
pmBranchDeltaSir_55 4029
pmBranchDeltaSir_56 4029
pmBranchDeltaSir_57 4029
pmBranchDeltaSir_58 4030
pmBranchDeltaSir_59 4030
pmBranchDeltaSir_60 4030
pmDpcchBer_000 4031
pmDpcchBer_001 4031
pmDpcchBer_002 4031
pmDpcchBer_003 4032
pmDpcchBer_004 4032
pmDpcchBer_005 4032

pmDpcchBer_006 4032
pmDpcchBer_007 4033
pmDpcchBer_008 4033
pmDpcchBer_009 4033
pmDpcchBer_010 4034
pmDpcchBer_011 4034
pmDpcchBer_012 4034
pmDpcchBer_013 4035
pmDpcchBer_014 4035
pmDpcchBer_015 4035
pmDpcchBer_016 4036
pmDpcchBer_017 4036
pmDpcchBer_018 4036
pmDpcchBer_019 4036
pmDpcchBer_020 4037
pmDpcchBer_021 4037
pmDpcchBer_022 4037
pmDpcchBer_023 4038
pmDpcchBer_024 4038
pmDpcchBer_025 4038
pmDpcchBer_026 4039
pmDpcchBer_027 4039
pmDpcchBer_028 4039
pmDpcchBer_029 4040
pmDpcchBer_030 4040
pmDpcchBer_031 4040
pmDpcchBer_032 4040
pmDpcchBer_033 4041
pmDpcchBer_034 4041
pmDpcchBer_035 4041
pmDpcchBer_036 4042
pmDpcchBer_037 4042
pmDpcchBer_038 4042
pmDpcchBer_039 4043
pmDpcchBer_040 4043
pmDpcchBer_041 4043
pmDpcchBer_042 4044
pmDpcchBer_043 4044
pmDpcchBer_044 4044
pmDpcchBer_045 4044
pmDpcchBer_046 4045
pmDpcchBer_047 4045
pmDpcchBer_048 4045
pmDpcchBer_049 4046
pmDpcchBer_050 4046
pmDpcchBer_051 4046
pmDpcchBer_052 4047
pmDpcchBer_053 4047
pmDpcchBer_054 4047
pmDpcchBer_055 4048
pmDpcchBer_056 4048

© Copyright IBM Corp. 2008, 2009. All Rights Reserved.

pmDpcchBer_057 4048
pmDpcchBer_058 4048
pmDpcchBer_059 4049
pmDpcchBer_060 4049
pmDpcchBer_061 4049
pmDpcchBer_062 4050
pmDpcchBer_063 4050
pmDpcchBer_064 4050
pmDpcchBer_065 4051
pmDpcchBer_066 4051
pmDpcchBer_067 4051
pmDpcchBer_068 4052
pmDpcchBer_069 4052
pmDpcchBer_070 4052
pmDpcchBer_071 4052
pmDpcchBer_072 4053
pmDpcchBer_073 4053
pmDpcchBer_074 4053
pmDpcchBer_075 4054
pmDpcchBer_076 4054
pmDpcchBer_077 4054
pmDpcchBer_078 4055
pmDpcchBer_079 4055
pmDpcchBer_080 4055
pmDpcchBer_081 4056
pmDpcchBer_082 4056
pmDpcchBer_083 4056
pmDpcchBer_084 4056
pmDpcchBer_085 4057
pmDpcchBer_086 4057
pmDpcchBer_087 4057
pmDpcchBer_088 4058
pmDpcchBer_089 4058
pmDpcchBer_090 4058
pmDpcchBer_091 4059
pmDpcchBer_092 4059
pmDpcchBer_093 4059
pmDpcchBer_094 4060
pmDpcchBer_095 4060
pmDpcchBer_096 4060
pmDpcchBer_097 4060
pmDpcchBer_098 4061
pmDpcchBer_099 4061
pmDpcchBer_100 4061
pmDpcchBer_101 4062
pmDpcchBer_102 4062
pmDpcchBer_103 4062
pmDpcchBer_104 4063
pmDpcchBer_105 4063
pmDpcchBer_106 4063
pmDpcchBer_107 4064

pmDpcchBer_108 4064
pmDpcchBer_109 4064
pmDpcchBer_110 4064
pmDpcchBer_111 4065
pmDpcchBer_112 4065
pmDpcchBer_113 4065
pmDpcchBer_114 4066
pmDpcchBer_115 4066
pmDpcchBer_116 4066
pmDpcchBer_117 4067
pmDpcchBer_118 4067
pmDpcchBer_119 4067
pmDpcchBer_120 4068
pmDpcchBer_121 4068
pmDpcchBer_122 4068
pmDpcchBer_123 4068
pmDpcchBer_124 4069
pmDpcchBer_125 4069
pmDpcchBer_126 4069
pmDpcchBer_127 4070
pmDpcchBer_128 4070
pmDpcchBerP5MD_00 4070
pmDpcchBerP5MD_01 4071
pmDpcchBerP5MD_02 4071
pmDpcchBerP5MD_03 4071
pmDpcchBerP5MD_04 4072
pmDpcchBerP5MD_05 4072
pmDpcchBerP5MD_06 4073
pmDpcchBerP5MD_07 4073
pmDpcchBerP5MD_08 4073
pmDpcchBerP5MD_09 4074
pmDpcchBerP5MD_10 4074
pmDpcchBerP5MD_11 4074
pmDpcchBerP5MD_12 4075
pmDpcchBerP5MD_13 4075
pmDpcchBerP5MD_14 4075
pmDpcchBerP5MD_15 4076
pmDpcchBerP5MD_16 4076
pmDpcchBerP5MD_17 4077
pmDpcchBerP5MD_18 4077
pmDpcchBerP5MD_19 4077
pmDpcchBerP5MD_20 4078
pmDpcchBerP5MD_21 4078
pmDpcchBerP5MD_22 4078
pmDpcchBerP5MD_23 4079
pmDpcchBerP5MD_24 4079
pmDpchCodePowerSf128_00 4079
pmDpchCodePowerSf128_01 4080
pmDpchCodePowerSf128_02 4080
pmDpchCodePowerSf128_03 4080
pmDpchCodePowerSf128_04 4081

© Copyright IBM Corp. 2008, 2009. All Rights Reserved.

pmDpchCodePowerSf128_05 4081
pmDpchCodePowerSf128_06 4081
pmDpchCodePowerSf128_07 4082
pmDpchCodePowerSf128_08 4082
pmDpchCodePowerSf128_09 4082
pmDpchCodePowerSf128_10 4083
pmDpchCodePowerSf128_11 4083
pmDpchCodePowerSf128_12 4083
pmDpchCodePowerSf128_13 4084
pmDpchCodePowerSf128_14 4084
pmDpchCodePowerSf128_15 4084
pmDpchCodePowerSf128_16 4085
pmDpchCodePowerSf128_17 4085
pmDpchCodePowerSf128_18 4085
pmDpchCodePowerSf128_19 4086
pmDpchCodePowerSf128_20 4086
pmDpchCodePowerSf128_21 4086
pmDpchCodePowerSf128_22 4087
pmDpchCodePowerSf128_23 4087
pmDpchCodePowerSf128_24 4087
pmDpchCodePowerSf128_25 4088
pmDpchCodePowerSf128_26 4088
pmDpchCodePowerSf128_27 4088
pmDpchCodePowerSf128_28 4089
pmDpchCodePowerSf128_29 4089
pmDpchCodePowerSf128_30 4089
pmDpchCodePowerSf128_31 4090
pmDpchCodePowerSf128_32 4090
pmDpchCodePowerSf128_33 4090
pmDpchCodePowerSf128_34 4091
pmDpchCodePowerSf128_35 4091
pmDpchCodePowerSf128_36 4091
pmDpchCodePowerSf128_37 4092
pmDpchCodePowerSf128_38 4092
pmDpchCodePowerSf128_39 4092
pmDpchCodePowerSf128_40 4093
pmDpchCodePowerSf128_41 4093
pmDpchCodePowerSf128_42 4093
pmDpchCodePowerSf128_43 4094
pmDpchCodePowerSf128_44 4094
pmDpchCodePowerSf128_45 4094
pmDpchCodePowerSf128_46 4095
pmDpchCodePowerSf128_47 4095
pmDpchCodePowerSf128_48 4095
pmDpchCodePowerSf128_49 4096
pmDpchCodePowerSf128_50 4096
pmDpchCodePowerSf128_51 4096
pmDpchCodePowerSf128_52 4097
pmDpchCodePowerSf128_53 4097
pmDpchCodePowerSf128_54 4097
pmDpchCodePowerSf128_55 4098

pmDpchCodePowerSf128_56 4098
pmDpchCodePowerSf128_57 4098
pmDpchCodePowerSf128_58 4099
pmDpchCodePowerSf128_59 4099
pmDpchCodePowerSf128_60 4099
pmDpchCodePowerSf128_61 4100
pmDpchCodePowerSf128_62 4100
pmDpchCodePowerSf128_63 4100
pmDpchCodePowerSf128_64 4101
pmDpchCodePowerSf128_65 4101
pmDpchCodePowerSf128_66 4101
pmDpchCodePowerSf128_67 4102
pmDpchCodePowerSf128_68 4102
pmDpchCodePowerSf128_69 4102
pmDpchCodePowerSf128_70 4103
pmDpchCodePowerSf128_71 4103
pmDpchCodePowerSf128_72 4103
pmDpchCodePowerSf128_73 4104
pmDpchCodePowerSf128_74 4104
pmDpchCodePowerSf16_00 4104
pmDpchCodePowerSf16_01 4105
pmDpchCodePowerSf16_02 4105
pmDpchCodePowerSf16_03 4105
pmDpchCodePowerSf16_04 4106
pmDpchCodePowerSf16_05 4106
pmDpchCodePowerSf16_06 4106
pmDpchCodePowerSf16_07 4107
pmDpchCodePowerSf16_08 4107
pmDpchCodePowerSf16_09 4107
pmDpchCodePowerSf16_10 4108
pmDpchCodePowerSf16_11 4108
pmDpchCodePowerSf16_12 4108
pmDpchCodePowerSf16_13 4109
pmDpchCodePowerSf16_14 4109
pmDpchCodePowerSf16_15 4109
pmDpchCodePowerSf16_16 4110
pmDpchCodePowerSf16_17 4110
pmDpchCodePowerSf16_18 4110
pmDpchCodePowerSf16_19 4111
pmDpchCodePowerSf16_20 4111
pmDpchCodePowerSf16_21 4111
pmDpchCodePowerSf16_22 4112
pmDpchCodePowerSf16_23 4112
pmDpchCodePowerSf16_24 4112
pmDpchCodePowerSf16_25 4113
pmDpchCodePowerSf16_26 4113
pmDpchCodePowerSf16_27 4113
pmDpchCodePowerSf16_28 4114
pmDpchCodePowerSf16_29 4114
pmDpchCodePowerSf16_30 4114
pmDpchCodePowerSf16_31 4115

© Copyright IBM Corp. 2008, 2009. All Rights Reserved.

pmDpchCodePowerSf16_32 4115
pmDpchCodePowerSf16_33 4115
pmDpchCodePowerSf16_34 4116
pmDpchCodePowerSf16_35 4116
pmDpchCodePowerSf16_36 4116
pmDpchCodePowerSf16_37 4117
pmDpchCodePowerSf16_38 4117
pmDpchCodePowerSf16_39 4117
pmDpchCodePowerSf16_40 4118
pmDpchCodePowerSf16_41 4118
pmDpchCodePowerSf16_42 4118
pmDpchCodePowerSf16_43 4119
pmDpchCodePowerSf16_44 4119
pmDpchCodePowerSf16_45 4119
pmDpchCodePowerSf16_46 4120
pmDpchCodePowerSf16_47 4120
pmDpchCodePowerSf16_48 4120
pmDpchCodePowerSf16_49 4121
pmDpchCodePowerSf16_50 4121
pmDpchCodePowerSf16_51 4121
pmDpchCodePowerSf16_52 4122
pmDpchCodePowerSf16_53 4122
pmDpchCodePowerSf16_54 4122
pmDpchCodePowerSf16_55 4123
pmDpchCodePowerSf16_56 4123
pmDpchCodePowerSf16_57 4123
pmDpchCodePowerSf16_58 4124
pmDpchCodePowerSf16_59 4124
pmDpchCodePowerSf16_60 4124
pmDpchCodePowerSf16_61 4125
pmDpchCodePowerSf16_62 4125
pmDpchCodePowerSf16_63 4125
pmDpchCodePowerSf16_64 4126
pmDpchCodePowerSf16_65 4126
pmDpchCodePowerSf16_66 4126
pmDpchCodePowerSf16_67 4127
pmDpchCodePowerSf16_68 4127
pmDpchCodePowerSf16_69 4127
pmDpchCodePowerSf16_70 4128
pmDpchCodePowerSf16_71 4128
pmDpchCodePowerSf16_72 4128
pmDpchCodePowerSf16_73 4129
pmDpchCodePowerSf16_74 4129
pmDpchCodePowerSf256_00 4129
pmDpchCodePowerSf256_01 4130
pmDpchCodePowerSf256_02 4130
pmDpchCodePowerSf256_03 4130
pmDpchCodePowerSf256_04 4131
pmDpchCodePowerSf256_05 4131
pmDpchCodePowerSf256_06 4131
pmDpchCodePowerSf256_07 4132

pmDpchCodePowerSf256_08 4132
pmDpchCodePowerSf256_09 4132
pmDpchCodePowerSf256_10 4133
pmDpchCodePowerSf256_11 4133
pmDpchCodePowerSf256_12 4133
pmDpchCodePowerSf256_13 4134
pmDpchCodePowerSf256_14 4134
pmDpchCodePowerSf256_15 4134
pmDpchCodePowerSf256_16 4135
pmDpchCodePowerSf256_17 4135
pmDpchCodePowerSf256_18 4135
pmDpchCodePowerSf256_19 4136
pmDpchCodePowerSf256_20 4136
pmDpchCodePowerSf256_21 4136
pmDpchCodePowerSf256_22 4137
pmDpchCodePowerSf256_23 4137
pmDpchCodePowerSf256_24 4137
pmDpchCodePowerSf256_25 4138
pmDpchCodePowerSf256_26 4138
pmDpchCodePowerSf256_27 4138
pmDpchCodePowerSf256_28 4139
pmDpchCodePowerSf256_29 4139
pmDpchCodePowerSf256_30 4139
pmDpchCodePowerSf256_31 4140
pmDpchCodePowerSf256_32 4140
pmDpchCodePowerSf256_33 4140
pmDpchCodePowerSf256_34 4141
pmDpchCodePowerSf256_35 4141
pmDpchCodePowerSf256_36 4141
pmDpchCodePowerSf256_37 4142
pmDpchCodePowerSf256_38 4142
pmDpchCodePowerSf256_39 4142
pmDpchCodePowerSf256_40 4143
pmDpchCodePowerSf256_41 4143
pmDpchCodePowerSf256_42 4143
pmDpchCodePowerSf256_43 4144
pmDpchCodePowerSf256_44 4144
pmDpchCodePowerSf256_45 4144
pmDpchCodePowerSf256_46 4145
pmDpchCodePowerSf256_47 4145
pmDpchCodePowerSf256_48 4145
pmDpchCodePowerSf256_49 4146
pmDpchCodePowerSf256_50 4146
pmDpchCodePowerSf256_51 4146
pmDpchCodePowerSf256_52 4147
pmDpchCodePowerSf256_53 4147
pmDpchCodePowerSf256_54 4147
pmDpchCodePowerSf256_55 4148
pmDpchCodePowerSf256_56 4148
pmDpchCodePowerSf256_57 4148
pmDpchCodePowerSf256_58 4149

© Copyright IBM Corp. 2008, 2009. All Rights Reserved.

pmDpchCodePowerSf256_59 4149
pmDpchCodePowerSf256_60 4149
pmDpchCodePowerSf256_61 4150
pmDpchCodePowerSf256_62 4150
pmDpchCodePowerSf256_63 4150
pmDpchCodePowerSf256_64 4151
pmDpchCodePowerSf256_65 4151
pmDpchCodePowerSf256_66 4151
pmDpchCodePowerSf256_67 4152
pmDpchCodePowerSf256_68 4152
pmDpchCodePowerSf256_69 4152
pmDpchCodePowerSf256_70 4153
pmDpchCodePowerSf256_71 4153
pmDpchCodePowerSf256_72 4153
pmDpchCodePowerSf256_73 4154
pmDpchCodePowerSf256_74 4154
pmDpchCodePowerSf32_00 4154
pmDpchCodePowerSf32_01 4155
pmDpchCodePowerSf32_02 4155
pmDpchCodePowerSf32_03 4155
pmDpchCodePowerSf32_04 4156
pmDpchCodePowerSf32_05 4156
pmDpchCodePowerSf32_06 4156
pmDpchCodePowerSf32_07 4157
pmDpchCodePowerSf32_08 4157
pmDpchCodePowerSf32_09 4157
pmDpchCodePowerSf32_10 4158
pmDpchCodePowerSf32_11 4158
pmDpchCodePowerSf32_12 4158
pmDpchCodePowerSf32_13 4159
pmDpchCodePowerSf32_14 4159
pmDpchCodePowerSf32_15 4159
pmDpchCodePowerSf32_16 4160
pmDpchCodePowerSf32_17 4160
pmDpchCodePowerSf32_18 4160
pmDpchCodePowerSf32_19 4161
pmDpchCodePowerSf32_20 4161
pmDpchCodePowerSf32_21 4161
pmDpchCodePowerSf32_22 4162
pmDpchCodePowerSf32_23 4162
pmDpchCodePowerSf32_24 4162
pmDpchCodePowerSf32_25 4163
pmDpchCodePowerSf32_26 4163
pmDpchCodePowerSf32_27 4163
pmDpchCodePowerSf32_28 4164
pmDpchCodePowerSf32_29 4164
pmDpchCodePowerSf32_30 4164
pmDpchCodePowerSf32_31 4165
pmDpchCodePowerSf32_32 4165
pmDpchCodePowerSf32_33 4165
pmDpchCodePowerSf32_34 4166

Updated: 2009-07-22

pmDpchCodePowerSf32_35 4166
pmDpchCodePowerSf32_36 4166
pmDpchCodePowerSf32_37 4167
pmDpchCodePowerSf32_38 4167
pmDpchCodePowerSf32_39 4167
pmDpchCodePowerSf32_40 4168
pmDpchCodePowerSf32_41 4168
pmDpchCodePowerSf32_42 4168
pmDpchCodePowerSf32_43 4169
pmDpchCodePowerSf32_44 4169
pmDpchCodePowerSf32_45 4169
pmDpchCodePowerSf32_46 4170
pmDpchCodePowerSf32_47 4170
pmDpchCodePowerSf32_48 4170
pmDpchCodePowerSf32_49 4171
pmDpchCodePowerSf32_50 4171
pmDpchCodePowerSf32_51 4171
pmDpchCodePowerSf32_52 4172
pmDpchCodePowerSf32_53 4172
pmDpchCodePowerSf32_54 4172
pmDpchCodePowerSf32_55 4173
pmDpchCodePowerSf32_56 4173
pmDpchCodePowerSf32_57 4173
pmDpchCodePowerSf32_58 4174
pmDpchCodePowerSf32_59 4174
pmDpchCodePowerSf32_60 4174
pmDpchCodePowerSf32_61 4175
pmDpchCodePowerSf32_62 4175
pmDpchCodePowerSf32_63 4175
pmDpchCodePowerSf32_64 4176
pmDpchCodePowerSf32_65 4176
pmDpchCodePowerSf32_66 4176
pmDpchCodePowerSf32_67 4177
pmDpchCodePowerSf32_68 4177
pmDpchCodePowerSf32_69 4177
pmDpchCodePowerSf32_70 4178
pmDpchCodePowerSf32_71 4178
pmDpchCodePowerSf32_72 4178
pmDpchCodePowerSf32_73 4179
pmDpchCodePowerSf32_74 4179
pmDpchCodePowerSf4_00 4179
pmDpchCodePowerSf4_01 4180
pmDpchCodePowerSf4_02 4180
pmDpchCodePowerSf4_03 4180
pmDpchCodePowerSf4_04 4181
pmDpchCodePowerSf4_05 4181
pmDpchCodePowerSf4_06 4181
pmDpchCodePowerSf4_07 4182
pmDpchCodePowerSf4_08 4182
pmDpchCodePowerSf4_09 4182
pmDpchCodePowerSf4_10 4183

© Copyright IBM Corp. 2008, 2009. All Rights Reserved.

pmDpchCodePowerSf4_11 4183
pmDpchCodePowerSf4_12 4183
pmDpchCodePowerSf4_13 4184
pmDpchCodePowerSf4_14 4184
pmDpchCodePowerSf4_15 4184
pmDpchCodePowerSf4_16 4185
pmDpchCodePowerSf4_17 4185
pmDpchCodePowerSf4_18 4185
pmDpchCodePowerSf4_19 4186
pmDpchCodePowerSf4_20 4186
pmDpchCodePowerSf4_21 4186
pmDpchCodePowerSf4_22 4187
pmDpchCodePowerSf4_23 4187
pmDpchCodePowerSf4_24 4187
pmDpchCodePowerSf4_25 4188
pmDpchCodePowerSf4_26 4188
pmDpchCodePowerSf4_27 4188
pmDpchCodePowerSf4_28 4189
pmDpchCodePowerSf4_29 4189
pmDpchCodePowerSf4_30 4189
pmDpchCodePowerSf4_31 4190
pmDpchCodePowerSf4_32 4190
pmDpchCodePowerSf4_33 4190
pmDpchCodePowerSf4_34 4191
pmDpchCodePowerSf4_35 4191
pmDpchCodePowerSf4_36 4191
pmDpchCodePowerSf4_37 4192
pmDpchCodePowerSf4_38 4192
pmDpchCodePowerSf4_39 4192
pmDpchCodePowerSf4_40 4193
pmDpchCodePowerSf4_41 4193
pmDpchCodePowerSf4_42 4193
pmDpchCodePowerSf4_43 4194
pmDpchCodePowerSf4_44 4194
pmDpchCodePowerSf4_45 4194
pmDpchCodePowerSf4_46 4195
pmDpchCodePowerSf4_47 4195
pmDpchCodePowerSf4_48 4195
pmDpchCodePowerSf4_49 4196
pmDpchCodePowerSf4_50 4196
pmDpchCodePowerSf4_51 4196
pmDpchCodePowerSf4_52 4197
pmDpchCodePowerSf4_53 4197
pmDpchCodePowerSf4_54 4197
pmDpchCodePowerSf4_55 4198
pmDpchCodePowerSf4_56 4198
pmDpchCodePowerSf4_57 4198
pmDpchCodePowerSf4_58 4199
pmDpchCodePowerSf4_59 4199
pmDpchCodePowerSf4_60 4199
pmDpchCodePowerSf4_61 4200

pmDpchCodePowerSf4_62 4200
pmDpchCodePowerSf4_63 4200
pmDpchCodePowerSf4_64 4201
pmDpchCodePowerSf4_65 4201
pmDpchCodePowerSf4_66 4201
pmDpchCodePowerSf4_67 4202
pmDpchCodePowerSf4_68 4202
pmDpchCodePowerSf4_69 4202
pmDpchCodePowerSf4_70 4203
pmDpchCodePowerSf4_71 4203
pmDpchCodePowerSf4_72 4203
pmDpchCodePowerSf4_73 4204
pmDpchCodePowerSf4_74 4204
pmDpchCodePowerSf64_00 4204
pmDpchCodePowerSf64_01 4205
pmDpchCodePowerSf64_02 4205
pmDpchCodePowerSf64_03 4205
pmDpchCodePowerSf64_04 4206
pmDpchCodePowerSf64_05 4206
pmDpchCodePowerSf64_06 4206
pmDpchCodePowerSf64_07 4207
pmDpchCodePowerSf64_08 4207
pmDpchCodePowerSf64_09 4207
pmDpchCodePowerSf64_10 4208
pmDpchCodePowerSf64_11 4208
pmDpchCodePowerSf64_12 4208
pmDpchCodePowerSf64_13 4209
pmDpchCodePowerSf64_14 4209
pmDpchCodePowerSf64_15 4209
pmDpchCodePowerSf64_16 4210
pmDpchCodePowerSf64_17 4210
pmDpchCodePowerSf64_18 4210
pmDpchCodePowerSf64_19 4211
pmDpchCodePowerSf64_20 4211
pmDpchCodePowerSf64_21 4211
pmDpchCodePowerSf64_22 4212
pmDpchCodePowerSf64_23 4212
pmDpchCodePowerSf64_24 4212
pmDpchCodePowerSf64_25 4213
pmDpchCodePowerSf64_26 4213
pmDpchCodePowerSf64_27 4213
pmDpchCodePowerSf64_28 4214
pmDpchCodePowerSf64_29 4214
pmDpchCodePowerSf64_30 4214
pmDpchCodePowerSf64_31 4215
pmDpchCodePowerSf64_32 4215
pmDpchCodePowerSf64_33 4215
pmDpchCodePowerSf64_34 4216
pmDpchCodePowerSf64_35 4216
pmDpchCodePowerSf64_36 4216
pmDpchCodePowerSf64_37 4217

© Copyright IBM Corp. 2008, 2009. All Rights Reserved.

pmDpchCodePowerSf64_38 4217
pmDpchCodePowerSf64_39 4217
pmDpchCodePowerSf64_40 4218
pmDpchCodePowerSf64_41 4218
pmDpchCodePowerSf64_42 4218
pmDpchCodePowerSf64_43 4219
pmDpchCodePowerSf64_44 4219
pmDpchCodePowerSf64_45 4219
pmDpchCodePowerSf64_46 4220
pmDpchCodePowerSf64_47 4220
pmDpchCodePowerSf64_48 4220
pmDpchCodePowerSf64_49 4221
pmDpchCodePowerSf64_50 4221
pmDpchCodePowerSf64_51 4221
pmDpchCodePowerSf64_52 4222
pmDpchCodePowerSf64_53 4222
pmDpchCodePowerSf64_54 4222
pmDpchCodePowerSf64_55 4223
pmDpchCodePowerSf64_56 4223
pmDpchCodePowerSf64_57 4223
pmDpchCodePowerSf64_58 4224
pmDpchCodePowerSf64_59 4224
pmDpchCodePowerSf64_60 4224
pmDpchCodePowerSf64_61 4225
pmDpchCodePowerSf64_62 4225
pmDpchCodePowerSf64_63 4225
pmDpchCodePowerSf64_64 4226
pmDpchCodePowerSf64_65 4226
pmDpchCodePowerSf64_66 4226
pmDpchCodePowerSf64_67 4227
pmDpchCodePowerSf64_68 4227
pmDpchCodePowerSf64_69 4227
pmDpchCodePowerSf64_70 4228
pmDpchCodePowerSf64_71 4228
pmDpchCodePowerSf64_72 4228
pmDpchCodePowerSf64_73 4229
pmDpchCodePowerSf64_74 4229
pmDpchCodePowerSf8_00 4229
pmDpchCodePowerSf8_01 4230
pmDpchCodePowerSf8_02 4230
pmDpchCodePowerSf8_03 4230
pmDpchCodePowerSf8_04 4231
pmDpchCodePowerSf8_05 4231
pmDpchCodePowerSf8_06 4231
pmDpchCodePowerSf8_07 4232
pmDpchCodePowerSf8_08 4232
pmDpchCodePowerSf8_09 4232
pmDpchCodePowerSf8_10 4233
pmDpchCodePowerSf8_11 4233
pmDpchCodePowerSf8_12 4233
pmDpchCodePowerSf8_13 4234

Updated: 2009-07-22

pmDpchCodePowerSf8_14 4234
pmDpchCodePowerSf8_15 4234
pmDpchCodePowerSf8_16 4235
pmDpchCodePowerSf8_17 4235
pmDpchCodePowerSf8_18 4235
pmDpchCodePowerSf8_19 4236
pmDpchCodePowerSf8_20 4236
pmDpchCodePowerSf8_21 4236
pmDpchCodePowerSf8_22 4237
pmDpchCodePowerSf8_23 4237
pmDpchCodePowerSf8_24 4237
pmDpchCodePowerSf8_25 4238
pmDpchCodePowerSf8_26 4238
pmDpchCodePowerSf8_27 4238
pmDpchCodePowerSf8_28 4239
pmDpchCodePowerSf8_29 4239
pmDpchCodePowerSf8_30 4239
pmDpchCodePowerSf8_31 4240
pmDpchCodePowerSf8_32 4240
pmDpchCodePowerSf8_33 4240
pmDpchCodePowerSf8_34 4241
pmDpchCodePowerSf8_35 4241
pmDpchCodePowerSf8_36 4241
pmDpchCodePowerSf8_37 4242
pmDpchCodePowerSf8_38 4242
pmDpchCodePowerSf8_39 4242
pmDpchCodePowerSf8_40 4243
pmDpchCodePowerSf8_41 4243
pmDpchCodePowerSf8_42 4243
pmDpchCodePowerSf8_43 4244
pmDpchCodePowerSf8_44 4244
pmDpchCodePowerSf8_45 4244
pmDpchCodePowerSf8_46 4245
pmDpchCodePowerSf8_47 4245
pmDpchCodePowerSf8_48 4245
pmDpchCodePowerSf8_49 4246
pmDpchCodePowerSf8_50 4246
pmDpchCodePowerSf8_51 4246
pmDpchCodePowerSf8_52 4247
pmDpchCodePowerSf8_53 4247
pmDpchCodePowerSf8_54 4247
pmDpchCodePowerSf8_55 4248
pmDpchCodePowerSf8_56 4248
pmDpchCodePowerSf8_57 4248
pmDpchCodePowerSf8_58 4249
pmDpchCodePowerSf8_59 4249
pmDpchCodePowerSf8_60 4249
pmDpchCodePowerSf8_61 4250
pmDpchCodePowerSf8_62 4250
pmDpchCodePowerSf8_63 4250
pmDpchCodePowerSf8_64 4251

© Copyright IBM Corp. 2008, 2009. All Rights Reserved.

pmDpchCodePowerSf8_65 4251
pmDpchCodePowerSf8_66 4251
pmDpchCodePowerSf8_67 4252
pmDpchCodePowerSf8_68 4252
pmDpchCodePowerSf8_69 4252
pmDpchCodePowerSf8_70 4253
pmDpchCodePowerSf8_71 4253
pmDpchCodePowerSf8_72 4253
pmDpchCodePowerSf8_73 4254
pmDpchCodePowerSf8_74 4254
pmDpchCodePwrSf128P5MD_00 4254
pmDpchCodePwrSf128P5MD_01 4255
pmDpchCodePwrSf128P5MD_02 4255
pmDpchCodePwrSf128P5MD_03 4256
pmDpchCodePwrSf128P5MD_04 4256
pmDpchCodePwrSf128P5MD_05 4256
pmDpchCodePwrSf128P5MD_06 4257
pmDpchCodePwrSf128P5MD_07 4257
pmDpchCodePwrSf128P5MD_08 4258
pmDpchCodePwrSf128P5MD_09 4258
pmDpchCodePwrSf128P5MD_10 4258
pmDpchCodePwrSf128P5MD_11 4259
pmDpchCodePwrSf128P5MD_12 4259
pmDpchCodePwrSf128P5MD_13 4259
pmDpchCodePwrSf128P5MD_14 4260
pmDpchCodePwrSf128P5MD_15 4260
pmDpchCodePwrSf128P5MD_16 4261
pmDpchCodePwrSf128P5MD_17 4261
pmDpchCodePwrSf128P5MD_18 4261
pmDpchCodePwrSf128P5MD_19 4262
pmDpchCodePwrSf128P5MD_20 4262
pmDpchCodePwrSf128P5MD_21 4263
pmDpchCodePwrSf128P5MD_22 4263
pmDpchCodePwrSf128P5MD_23 4263
pmDpchCodePwrSf128P5MD_24 4264
pmDpchCodePwrSf128P5MD_25 4264
pmDpchCodePwrSf128P5MD_26 4264
pmDpchCodePwrSf128P5MD_27 4265
pmDpchCodePwrSf128P5MD_28 4265
pmDpchCodePwrSf128P5MD_29 4266
pmDpchCodePwrSf128P5MD_30 4266
pmDpchCodePwrSf128P5MD_31 4266
pmDpchCodePwrSf128P5MD_32 4267
pmDpchCodePwrSf128P5MD_33 4267
pmDpchCodePwrSf128P5MD_34 4268
pmDpchCodePwrSf128P5MD_35 4268
pmDpchCodePwrSf128P5MD_36 4268
pmDpchCodePwrSf128P5MD_37 4269
pmDpchCodePwrSf16P5MD_00 4269
pmDpchCodePwrSf16P5MD_01 4269
pmDpchCodePwrSf16P5MD_02 4270

Updated: 2009-07-22

pmDpchCodePwrSf16P5MD_03 4270
pmDpchCodePwrSf16P5MD_04 4271
pmDpchCodePwrSf16P5MD_05 4271
pmDpchCodePwrSf16P5MD_06 4271
pmDpchCodePwrSf16P5MD_07 4272
pmDpchCodePwrSf16P5MD_08 4272
pmDpchCodePwrSf16P5MD_09 4273
pmDpchCodePwrSf16P5MD_10 4273
pmDpchCodePwrSf16P5MD_11 4273
pmDpchCodePwrSf16P5MD_12 4274
pmDpchCodePwrSf16P5MD_13 4274
pmDpchCodePwrSf16P5MD_14 4274
pmDpchCodePwrSf16P5MD_15 4275
pmDpchCodePwrSf16P5MD_16 4275
pmDpchCodePwrSf16P5MD_17 4276
pmDpchCodePwrSf16P5MD_18 4276
pmDpchCodePwrSf16P5MD_19 4276
pmDpchCodePwrSf16P5MD_20 4277
pmDpchCodePwrSf16P5MD_21 4277
pmDpchCodePwrSf16P5MD_22 4278
pmDpchCodePwrSf16P5MD_23 4278
pmDpchCodePwrSf16P5MD_24 4278
pmDpchCodePwrSf16P5MD_25 4279
pmDpchCodePwrSf16P5MD_26 4279
pmDpchCodePwrSf16P5MD_27 4279
pmDpchCodePwrSf16P5MD_28 4280
pmDpchCodePwrSf16P5MD_29 4280
pmDpchCodePwrSf16P5MD_30 4281
pmDpchCodePwrSf16P5MD_31 4281
pmDpchCodePwrSf16P5MD_32 4281
pmDpchCodePwrSf16P5MD_33 4282
pmDpchCodePwrSf16P5MD_34 4282
pmDpchCodePwrSf16P5MD_35 4283
pmDpchCodePwrSf16P5MD_36 4283
pmDpchCodePwrSf16P5MD_37 4283
pmDpchCodePwrSf256P5MD_00 4284
pmDpchCodePwrSf256P5MD_01 4284
pmDpchCodePwrSf256P5MD_02 4284
pmDpchCodePwrSf256P5MD_03 4285
pmDpchCodePwrSf256P5MD_04 4285
pmDpchCodePwrSf256P5MD_05 4286
pmDpchCodePwrSf256P5MD_06 4286
pmDpchCodePwrSf256P5MD_07 4286
pmDpchCodePwrSf256P5MD_08 4287
pmDpchCodePwrSf256P5MD_09 4287
pmDpchCodePwrSf256P5MD_10 4288
pmDpchCodePwrSf256P5MD_11 4288
pmDpchCodePwrSf256P5MD_12 4288
pmDpchCodePwrSf256P5MD_13 4289
pmDpchCodePwrSf256P5MD_14 4289
pmDpchCodePwrSf256P5MD_15 4289

© Copyright IBM Corp. 2008, 2009. All Rights Reserved.

pmDpchCodePwrSf256P5MD_16 4290
pmDpchCodePwrSf256P5MD_17 4290
pmDpchCodePwrSf256P5MD_18 4291
pmDpchCodePwrSf256P5MD_19 4291
pmDpchCodePwrSf256P5MD_20 4291
pmDpchCodePwrSf256P5MD_21 4292
pmDpchCodePwrSf256P5MD_22 4292
pmDpchCodePwrSf256P5MD_23 4293
pmDpchCodePwrSf256P5MD_24 4293
pmDpchCodePwrSf256P5MD_25 4293
pmDpchCodePwrSf256P5MD_26 4294
pmDpchCodePwrSf256P5MD_27 4294
pmDpchCodePwrSf256P5MD_28 4294
pmDpchCodePwrSf256P5MD_29 4295
pmDpchCodePwrSf256P5MD_30 4295
pmDpchCodePwrSf256P5MD_31 4296
pmDpchCodePwrSf256P5MD_32 4296
pmDpchCodePwrSf256P5MD_33 4296
pmDpchCodePwrSf256P5MD_34 4297
pmDpchCodePwrSf256P5MD_35 4297
pmDpchCodePwrSf256P5MD_36 4298
pmDpchCodePwrSf256P5MD_37 4298
pmDpchCodePwrSf32P5MD_00 4298
pmDpchCodePwrSf32P5MD_01 4299
pmDpchCodePwrSf32P5MD_02 4299
pmDpchCodePwrSf32P5MD_03 4299
pmDpchCodePwrSf32P5MD_04 4300
pmDpchCodePwrSf32P5MD_05 4300
pmDpchCodePwrSf32P5MD_06 4301
pmDpchCodePwrSf32P5MD_07 4301
pmDpchCodePwrSf32P5MD_08 4301
pmDpchCodePwrSf32P5MD_09 4302
pmDpchCodePwrSf32P5MD_10 4302
pmDpchCodePwrSf32P5MD_11 4303
pmDpchCodePwrSf32P5MD_12 4303
pmDpchCodePwrSf32P5MD_13 4303
pmDpchCodePwrSf32P5MD_14 4304
pmDpchCodePwrSf32P5MD_15 4304
pmDpchCodePwrSf32P5MD_16 4304
pmDpchCodePwrSf32P5MD_17 4305
pmDpchCodePwrSf32P5MD_18 4305
pmDpchCodePwrSf32P5MD_19 4306
pmDpchCodePwrSf32P5MD_20 4306
pmDpchCodePwrSf32P5MD_21 4306
pmDpchCodePwrSf32P5MD_22 4307
pmDpchCodePwrSf32P5MD_23 4307
pmDpchCodePwrSf32P5MD_24 4308
pmDpchCodePwrSf32P5MD_25 4308
pmDpchCodePwrSf32P5MD_26 4308
pmDpchCodePwrSf32P5MD_27 4309
pmDpchCodePwrSf32P5MD_28 4309

Updated: 2009-07-22

pmDpchCodePwrSf32P5MD_29 4309
pmDpchCodePwrSf32P5MD_30 4310
pmDpchCodePwrSf32P5MD_31 4310
pmDpchCodePwrSf32P5MD_32 4311
pmDpchCodePwrSf32P5MD_33 4311
pmDpchCodePwrSf32P5MD_34 4311
pmDpchCodePwrSf32P5MD_35 4312
pmDpchCodePwrSf32P5MD_36 4312
pmDpchCodePwrSf32P5MD_37 4313
pmDpchCodePwrSf4P5MD_00 4313
pmDpchCodePwrSf4P5MD_01 4313
pmDpchCodePwrSf4P5MD_02 4314
pmDpchCodePwrSf4P5MD_03 4314
pmDpchCodePwrSf4P5MD_04 4314
pmDpchCodePwrSf4P5MD_05 4315
pmDpchCodePwrSf4P5MD_06 4315
pmDpchCodePwrSf4P5MD_07 4316
pmDpchCodePwrSf4P5MD_08 4316
pmDpchCodePwrSf4P5MD_09 4316
pmDpchCodePwrSf4P5MD_10 4317
pmDpchCodePwrSf4P5MD_11 4317
pmDpchCodePwrSf4P5MD_12 4318
pmDpchCodePwrSf4P5MD_13 4318
pmDpchCodePwrSf4P5MD_14 4318
pmDpchCodePwrSf4P5MD_15 4319
pmDpchCodePwrSf4P5MD_16 4319
pmDpchCodePwrSf4P5MD_17 4319
pmDpchCodePwrSf4P5MD_18 4320
pmDpchCodePwrSf4P5MD_19 4320
pmDpchCodePwrSf4P5MD_20 4321
pmDpchCodePwrSf4P5MD_21 4321
pmDpchCodePwrSf4P5MD_22 4321
pmDpchCodePwrSf4P5MD_23 4322
pmDpchCodePwrSf4P5MD_24 4322
pmDpchCodePwrSf4P5MD_25 4323
pmDpchCodePwrSf4P5MD_26 4323
pmDpchCodePwrSf4P5MD_27 4323
pmDpchCodePwrSf4P5MD_28 4324
pmDpchCodePwrSf4P5MD_29 4324
pmDpchCodePwrSf4P5MD_30 4324
pmDpchCodePwrSf4P5MD_31 4325
pmDpchCodePwrSf4P5MD_32 4325
pmDpchCodePwrSf4P5MD_33 4326
pmDpchCodePwrSf4P5MD_34 4326
pmDpchCodePwrSf4P5MD_35 4326
pmDpchCodePwrSf4P5MD_36 4327
pmDpchCodePwrSf4P5MD_37 4327
pmDpchCodePwrSf64P5MD_00 4328
pmDpchCodePwrSf64P5MD_01 4328
pmDpchCodePwrSf64P5MD_02 4328
pmDpchCodePwrSf64P5MD_03 4329

© Copyright IBM Corp. 2008, 2009. All Rights Reserved.

pmDpchCodePwrSf64P5MD_04 4329
pmDpchCodePwrSf64P5MD_05 4329
pmDpchCodePwrSf64P5MD_06 4330
pmDpchCodePwrSf64P5MD_07 4330
pmDpchCodePwrSf64P5MD_08 4331
pmDpchCodePwrSf64P5MD_09 4331
pmDpchCodePwrSf64P5MD_10 4331
pmDpchCodePwrSf64P5MD_11 4332
pmDpchCodePwrSf64P5MD_12 4332
pmDpchCodePwrSf64P5MD_13 4333
pmDpchCodePwrSf64P5MD_14 4333
pmDpchCodePwrSf64P5MD_15 4333
pmDpchCodePwrSf64P5MD_16 4334
pmDpchCodePwrSf64P5MD_17 4334
pmDpchCodePwrSf64P5MD_18 4334
pmDpchCodePwrSf64P5MD_19 4335
pmDpchCodePwrSf64P5MD_20 4335
pmDpchCodePwrSf64P5MD_21 4336
pmDpchCodePwrSf64P5MD_22 4336
pmDpchCodePwrSf64P5MD_23 4336
pmDpchCodePwrSf64P5MD_24 4337
pmDpchCodePwrSf64P5MD_25 4337
pmDpchCodePwrSf64P5MD_26 4338
pmDpchCodePwrSf64P5MD_27 4338
pmDpchCodePwrSf64P5MD_28 4338
pmDpchCodePwrSf64P5MD_29 4339
pmDpchCodePwrSf64P5MD_30 4339
pmDpchCodePwrSf64P5MD_31 4339
pmDpchCodePwrSf64P5MD_32 4340
pmDpchCodePwrSf64P5MD_33 4340
pmDpchCodePwrSf64P5MD_34 4341
pmDpchCodePwrSf64P5MD_35 4341
pmDpchCodePwrSf64P5MD_36 4341
pmDpchCodePwrSf64P5MD_37 4342
pmDpdchBer_000 4342
pmDpdchBer_001 4342
pmDpdchBer_002 4343
pmDpdchBer_003 4343
pmDpdchBer_004 4343
pmDpdchBer_005 4344
pmDpdchBer_006 4344
pmDpdchBer_007 4344
pmDpdchBer_008 4345
pmDpdchBer_009 4345
pmDpdchBer_010 4345
pmDpdchBer_011 4346
pmDpdchBer_012 4346
pmDpdchBer_013 4346
pmDpdchBer_014 4347
pmDpdchBer_015 4347
pmDpdchBer_016 4347

pmDpdchBer_017 4348
pmDpdchBer_018 4348
pmDpdchBer_019 4348
pmDpdchBer_020 4349
pmDpdchBer_021 4349
pmDpdchBer_022 4349
pmDpdchBer_023 4350
pmDpdchBer_024 4350
pmDpdchBer_025 4350
pmDpdchBer_026 4351
pmDpdchBer_027 4351
pmDpdchBer_028 4351
pmDpdchBer_029 4352
pmDpdchBer_030 4352
pmDpdchBer_031 4352
pmDpdchBer_032 4353
pmDpdchBer_033 4353
pmDpdchBer_034 4353
pmDpdchBer_035 4354
pmDpdchBer_036 4354
pmDpdchBer_037 4354
pmDpdchBer_038 4355
pmDpdchBer_039 4355
pmDpdchBer_040 4355
pmDpdchBer_041 4356
pmDpdchBer_042 4356
pmDpdchBer_043 4356
pmDpdchBer_044 4357
pmDpdchBer_045 4357
pmDpdchBer_046 4357
pmDpdchBer_047 4358
pmDpdchBer_048 4358
pmDpdchBer_049 4358
pmDpdchBer_050 4359
pmDpdchBer_051 4359
pmDpdchBer_052 4359
pmDpdchBer_053 4360
pmDpdchBer_054 4360
pmDpdchBer_055 4360
pmDpdchBer_056 4361
pmDpdchBer_057 4361
pmDpdchBer_058 4361
pmDpdchBer_059 4362
pmDpdchBer_060 4362
pmDpdchBer_061 4362
pmDpdchBer_062 4363
pmDpdchBer_063 4363
pmDpdchBer_064 4363
pmDpdchBer_065 4364
pmDpdchBer_066 4364
pmDpdchBer_067 4364

© Copyright IBM Corp. 2008, 2009. All Rights Reserved.

pmDpdchBer_068 4365
pmDpdchBer_069 4365
pmDpdchBer_070 4365
pmDpdchBer_071 4366
pmDpdchBer_072 4366
pmDpdchBer_073 4366
pmDpdchBer_074 4367
pmDpdchBer_075 4367
pmDpdchBer_076 4367
pmDpdchBer_077 4368
pmDpdchBer_078 4368
pmDpdchBer_079 4368
pmDpdchBer_080 4369
pmDpdchBer_081 4369
pmDpdchBer_082 4369
pmDpdchBer_083 4370
pmDpdchBer_084 4370
pmDpdchBer_085 4370
pmDpdchBer_086 4371
pmDpdchBer_087 4371
pmDpdchBer_088 4371
pmDpdchBer_089 4372
pmDpdchBer_090 4372
pmDpdchBer_091 4372
pmDpdchBer_092 4373
pmDpdchBer_093 4373
pmDpdchBer_094 4373
pmDpdchBer_095 4374
pmDpdchBer_096 4374
pmDpdchBer_097 4374
pmDpdchBer_098 4375
pmDpdchBer_099 4375
pmDpdchBer_100 4375
pmDpdchBer_101 4376
pmDpdchBer_102 4376
pmDpdchBer_103 4376
pmDpdchBer_104 4377
pmDpdchBer_105 4377
pmDpdchBer_106 4377
pmDpdchBer_107 4378
pmDpdchBer_108 4378
pmDpdchBer_109 4378
pmDpdchBer_110 4379
pmDpdchBer_111 4379
pmDpdchBer_112 4379
pmDpdchBer_113 4380
pmDpdchBer_114 4380
pmDpdchBer_115 4380
pmDpdchBer_116 4381
pmDpdchBer_117 4381
pmDpdchBer_118 4381

pmDpdchBer_119 4382
pmDpdchBer_120 4382
pmDpdchBer_121 4382
pmDpdchBer_122 4383
pmDpdchBer_123 4383
pmDpdchBer_124 4383
pmDpdchBer_125 4384
pmDpdchBer_126 4384
pmDpdchBer_127 4384
pmDpdchBer_128 4385
pmDpdchBerP5MD_00 4385
pmDpdchBerP5MD_01 4386
pmDpdchBerP5MD_02 4386
pmDpdchBerP5MD_03 4386
pmDpdchBerP5MD_04 4387
pmDpdchBerP5MD_05 4387
pmDpdchBerP5MD_06 4387
pmDpdchBerP5MD_07 4388
pmDpdchBerP5MD_08 4388
pmDpdchBerP5MD_09 4389
pmDpdchBerP5MD_10 4389
pmDpdchBerP5MD_11 4389
pmDpdchBerP5MD_12 4390
pmDpdchBerP5MD_13 4390
pmDpdchBerP5MD_14 4391
pmDpdchBerP5MD_15 4391
pmDpdchBerP5MD_16 4391
pmDpdchBerP5MD_17 4392
pmDpdchBerP5MD_18 4392
pmDpdchBerP5MD_19 4392
pmDpdchBerP5MD_20 4393
pmDpdchBerP5MD_21 4393
pmDpdchBerP5MD_22 4394
pmDpdchBerP5MD_23 4394
pmDpdchBerP5MD_24 4394
pmOutOfSynch_00 4395
pmOutOfSynch_01 4395
pmOutOfSynch_02 4395
pmOutOfSynch_03 4396
pmOutOfSynch_04 4396
pmOutOfSynch_05 4396
pmOutOfSynch_06 4397
pmOutOfSynch_07 4397
pmOutOfSynch_08 4397
pmOutOfSynch_09 4398
pmOutOfSynch_10 4398
pmOutOfSynch_11 4398
pmOutOfSynch_12 4399
pmOutOfSynch_13 4399
pmOutOfSynch_14 4399
pmOutOfSynch_15 4400

© Copyright IBM Corp. 2008, 2009. All Rights Reserved.

pmOutOfSynch_16 4400
pmOutOfSynch_17 4400
pmOutOfSynch_18 4401
pmOutOfSynch_19 4401
pmOutOfSynch_20 4401
pmOutOfSynch_21 4402
pmOutOfSynch_22 4402
pmOutOfSynch_23 4402
pmOutOfSynch_24 4403
pmOutOfSynch_25 4403
pmOutOfSynch_26 4403
pmOutOfSynch_27 4404
pmOutOfSynch_28 4404
pmOutOfSynch_29 4404
pmOutOfSynch_30 4405
pmOutOfSynch_31 4405
pmOutOfSynch_32 4405
pmOutOfSynch_33 4406
pmOutOfSynch_34 4406
pmOutOfSynch_35 4406
pmOutOfSynch_36 4407
pmOutOfSynch_37 4407
pmOutOfSynch_38 4407
pmOutOfSynch_39 4408
pmOutOfSynch_40 4408
pmOutOfSynch_41 4408
pmOutOfSynch_42 4409
pmOutOfSynch_43 4409
pmOutOfSynch_44 4409
pmOutOfSynch_45 4410
pmOutOfSynch_46 4410
pmOutOfSynch_47 4410
pmOutOfSynch_48 4411
pmOutOfSynch_49 4411
pmRLSSupSynchToUnsynch 4411
pmRLSSupWaitToOutOfSynch 4412
pmUISynchTime_00 4412
pmUISynchTime_01 4412
pmUISynchTime_02 4413
pmUISynchTime_03 4413
pmUISynchTime_04 4413
pmUISynchTime_05 4414
pmUISynchTime_06 4414
pmUISynchTime_07 4414
pmUISynchTime_08 4415
pmUISynchTime_09 4415
pmUISynchTime_10 4415
pmUISynchTime_11 4416
pmUISynchTime_12 4416
pmUISynchTime_13 4416
pmUISynchTime_14 4417

pmUISynchTime_15 4417
pmUISynchTimeSHO_00 4417
pmUISynchTimeSHO_01 4418
pmUISynchTimeSHO_02 4418
pmUISynchTimeSHO_03 4418
pmUISynchTimeSHO_04 4419
pmUISynchTimeSHO_05 4419
pmUISynchTimeSHO_06 4419
pmUISynchTimeSHO_07 4420
pmUISynchTimeSHO_08 4420
pmUISynchTimeSHO_09 4420
pmUISynchTimeSHO_10 4421
pmUISynchTimeSHO_11 4421
pmUISynchTimeSHO_12 4421
pmUISynchTimeSHO_13 4422
pmUISynchTimeSHO_14 4422
pmUISynchTimeSHO_15 4422
Ranap Primitive Calculations 4423
GRAPHmultiLineSeparator 4423
NUMDAYS 4423
NUMHOURS 4423
Ranap Peg Counts 4423
PERLENSEC 4423
pmNnsfLoadDistributionRouted 4424
pmNnsfNriRouted 4424
RNC_RELEASE 4424
RNC 4425
RNC_SubNetwork_Region 4425
RNC Primitive Calculations 4425
Average_CS_Speech_Users_per_RNC 4425
Avr_PS_Interactive_Calls_DCH 4425
Avr_PS_Interactive_Calls_FACH 4425
CS_64_DL_Code_Utilization_per_RNC 4426
CS_Speech_Downlink_Code_Utilization_per_RNC 4426
CS_Speech_Erlang_per_RNC 4426
DL_Payload_PS_Interactive_DCH 4426
DL_Payload_PS_Interactive_FACH 4426
GRAPHmultiLineSeparator 4426
Handover_Reduction_Factor_per_RNC 4427
k_PAYLOAD_DL_TOT 4427
k_PAYLOAD_UL_TOT 4427
k_RAB_EST_FAIL 4427
k_RAB_EST_FAIL_RATE 4427
k_RAB_REL_FAIL 4427
k_RAB_REL_FAIL_RATE 4427
MainProcessorLoadRNC 4428
NUMDAYS 4428
NUMHOURS 4428
PAYLOAD_CS_DL_MB 4428
PAYLOAD_CS_UL_MB 4428

© Copyright IBM Corp. 2008, 2009. All Rights Reserved.

PAYLOAD_PS_DL_MB 4428
PAYLOAD_PS_UL_MB 4429
PAYLOAD_TOT_DL_MB 4429
PAYLOAD_TOT_UL_MB 4429
pmDlTrafficVolumeCs12_MB 4429
pmDlTrafficVolumeCs12Ps0_MB 4429
pmDlTrafficVolumeCs12Ps64_MB 4429
pmDlTrafficVolumeCs57_MB 4430
pmDlTrafficVolumeCs64_MB 4430
pmDlTrafficVolumePs128_MB 4430
pmDlTrafficVolumePs384_MB 4430
pmDlTrafficVolumePs64_MB 4430
pmDlTrafficVolumePsCommon_MB 4430
pmUlTrafficVolumeCs12_MB 4431
pmUlTrafficVolumeCs12Ps0_MB 4431
pmUlTrafficVolumeCs12Ps64_MB 4431
pmUlTrafficVolumeCs57_MB 4431
pmUlTrafficVolumeCs64_MB 4431
pmUlTrafficVolumePs128_MB 4431
pmUlTrafficVolumePs384_MB 4432
pmUlTrafficVolumePs64_MB 4432
pmUlTrafficVolumePsCommon_MB 4432
POSITIONING_FAIL 4432
RAB_EST_ATT_CS57 4432
RAB_EST_ATT_CS64 4432
RAB_EST_ATT_PS128 4433
RAB_EST_ATT_PS384 4433
RAB_EST_ATT_PS64 4433
RAB_EST_ATT_PSCOMMON 4433
RAB_EST_ATT_SP_PS0 4433
RAB_EST_ATT_SP_PS64 4433
RAB_EST_ATT_SPEECH 4433
RAB_EST_FAIL_CS57 4434
RAB_EST_FAIL_CS64 4434
RAB_EST_FAIL_PS128 4434
RAB_EST_FAIL_PS384 4434
RAB_EST_FAIL_PS64 4434
RAB_EST_FAIL_PSCOMMON 4434
RAB_EST_FAIL_SP_PS0 4435
RAB_EST_FAIL_SP_PS64 4435
RAB_EST_FAIL_SPEECH 4435
RAB_REL_ATT_CS57 4435
RAB_REL_ATT_CS64 4435
RAB_REL_ATT_PS128 4435
RAB_REL_ATT_PS384 4435
RAB_REL_ATT_PS64 4436
RAB_REL_ATT_PSCOMMON 4436
RAB_REL_ATT_SP_PS0 4436
RAB_REL_ATT_SP_PS64 4436
RAB_REL_ATT_SPEECH 4436
RAB_REL_FAIL_CS57 4436

RAB_REL_FAIL_CS64 4437
RAB_REL_FAIL_PS128 4437
RAB_REL_FAIL_PS384 4437
RAB_REL_FAIL_PS64 4437
RAB_REL_FAIL_PSCOMMON 4437
RAB_REL_FAIL_SP_PS0 4437
RAB_REL_FAIL_SP_PS64 4437
RAB_REL_FAIL_SPEECH 4438
RNCOutRelocationSuccessRate 4438
RNCRelocationSuccessRate 4438
SuccOutUMTSGSMHoRNCRate 4438
UL_Payload_PS_Interactive_DCH 4438
UL_Payload_PS_Interactive_RACH 4438
Uplink_CS_64_BLER 4438
Uplink_CS_Streaming_BLER 4439
Uplink_PS_Interactive_BLER 4439
Uplink_PS_Streaming_16_64_and_PS8_BLER 4439
Uplink_Speech_and_PS64_BLER 4439
Uplink_Speech_BLER 4439
RNC Peg Counts 4439
activeQueueMgmt 4439
adjustmentPeriod 4440
adjustmentRatio 4440
aliasPlmnIdentities 4440
allow384HsRab 4440
allowSwitchToCommon 4441
altitude 4441
amountOfReporting1a 4441
amountOfReporting1c 4441
asCellSyncInfoRepInd 4442
bandwidthMargin 4442
bandwidthMarginUl 4442
bcchModCycleLength 4442
betaPrachControlTf0 4443
betaPrachControlTf1 4443
betaPrachDataTf0 4443
betaPrachDataTf1 4443
blerCorrectionFactor 4444
cBackOff 4444
cchWaitCuT 4444
cCM 4444
cellListAtRemovalDelay 4445
ciphering 4445
cipheringGuardTime 4445
cNbifho 4445
cnDrxCycleLengthCs 4446
cnDrxCycleLengthPs 4446
cnhhoSupp 4446
cnInformation 4447
codePowerPeriod 4447
comprModeRetryInterv 4447

© Copyright IBM Corp. 2008, 2009. All Rights Reserved.

confidence 4447
counterAlarmCeaseLimit 4448
counterAlarmThreshold 4448
counterWarningAlarmCeaseLimit 4448
coverageTimer 4448
cPO 4449
ctrFileSize 4449
dchRcLostT 4449
deltaSir1 4449
deltaSir2 4450
deltaSirAfter1 4450
deltaSirAfter2 4450
dlInitSirTarget 4450
dlPcMethod 4451
dlRlcBufUpswitch 4451
dlRlcBufUpswitchMrab 4451
dlSfLimitTimer 4451
doStep 4452
downswitchPwrMargin 4452
downswitchThreshold 4452
downswitchTimer 4452
downswitchTimerSp 4453
downswitchTimerThreshold 4453
downswitchTimerUp 4453
dsCellSyncInfoRepInd 4453
dscpValuePsStreaming 4454
dto 4454
ecNoPcpichDefault 4454
elevationThreshold 4454
emergencyCallRedirect 4455
enabledPositioningFeatures 4455
fddGsmHOSupp 4455
fddIfhoSupp 4455
filterCoeff4_2b 4456
filterCoeff6 4456
filterCoefficient1 4456
filterCoefficient2 4456
filteringCoefficient 4457
fixedPowerDl 4457
fixedRefPower 4457
gainFactorCExtraHigh 4457
gainFactorCHigh 4458
gainFactorCLow 4458
gainFactorDExtraHigh 4458
gainFactorDHigh 4458
gainFactorDLow 4459
gpehDataLevel 4459
gpehFileSize 4459
gpehStorageSize 4459
gsmAmountPropRepeat 4460
gsmFilterCoefficient3 4460

Updated: 2009-07-22

gsmPropRepeatInterval 4460
gsmThresh3a 4460
gsmTimeDiffRepInd 4461
hoTypeDrncBand1 4461
hoTypeDrncBand10 4461
hoTypeDrncBand11 4461
hoTypeDrncBand12 4462
hoTypeDrncBand13 4462
hoTypeDrncBand14 4462
hoTypeDrncBand15 4462
hoTypeDrncBand16 4463
hoTypeDrncBand17 4463
hoTypeDrncBand2 4463
hoTypeDrncBand3 4463
hoTypeDrncBand4 4464
hoTypeDrncBand5 4464
hoTypeDrncBand6 4464
hoTypeDrncBand7 4464
hoTypeDrncBand8 4465
hoTypeDrncBand9 4465
hsCellChangeAllowed 4465
hsCellChangeCfnOffset 4465
hsdschInactivityTimer 4466
hsDschRcLostT 4466
hsHysteresis1d 4466
hsMacdSwitchTimeOffset 4467
hsOnlyBestCell 4467
hsQualityEstimate 4467
hsTimeToTrigger1d 4467
hyst4_2b 4468
hysteresis1a 4468
hysteresis1b 4468
hysteresis1c 4468
hysteresis1d 4469
hysteresis2d 4469
hysteresis2f 4469
hysteresis3a 4469
hysteresisSiUpdate 4470
ifhoAmountPropRepeat 4470
ifhoPropRepeatInterval 4470
inactivityTimer 4470
inactivityTimerDch 4471
initialCellListDelay 4471
initShoPowerParam 4471
interFreqCnhhoPenaltyEcno 4471
interFreqCnhhoPenaltyRscp 4472
intraFreqCnhhoPenalty 4472
intraFreqCnhhoWeight 4472
itp 4473
loadSharingDirRetryEnabled 4473
loadSharingRrcEnabled 4473

© Copyright IBM Corp. 2008, 2009. All Rights Reserved.

loadSharingThreshold 4474
maxActiveSet 4474
maxAdjustmentStep 4474
maxBufferTime 4474
maxGsmMonSubset 4475
maxIefMonSubset 4475
maxNumberRepCells1a 4475
maxNumberRepCells1c 4475
maxNumberRepCells1d 4476
maxNumberRepCells3a 4476
maxNumbRepCells4_2b 4476
maxSohoListSubset 4476
mcc_CM 4476
measQuantity1 4477
mnc_CM 4477
mncLength 4477
msCellSyncInfoRepInd 4478
multiRabSp0Available 4478
multiRabUdi8Available 4478
n300 4478
n302 4479
n308 4479
n313 4479
n315 4479
netwResourceIdentifierLengthCs 4480
netwResourceIdentifierLengthPs 4480
nonUsedFreqThresh4_2bEcno 4480
nonUsedFreqThresh4_2bRscp 4480
nonUsedFreqW4_2b 4481
noOfCountersAllowed 4481
noOfMaxDrxCycles 4481
noOfMibValueTagRetrans 4481
noOfPagingRecordTransm 4482
packetEstMode 4482
pcpichPowerDefault 4482
pendingTimeAfterTrigger 4482
PERLENSEC 4483
PERLENSEC_K 4483
pmCnInitPagingToIdleUe 4483
pmCsCnDowntime 4484
pmIntegrityFailureRrcMsg 4484
pmIuSccpConRate_00 4484
pmIuSccpConRate_01 4485
pmIuSccpConRate_02 4485
pmIuSccpConRate_03 4485
pmIuSccpConRate_04 4486
pmIuSccpConRate_05 4486
pmIuSccpConRate_06 4486
pmIuSccpConRate_07 4486
pmIuSccpConRate_08 4487
pmIuSccpConRate_09 4487

pmIuSccpConRate_10 4487
pmIuSccpConRate_11 4488
pmIuSccpConRate_12 4488
pmIuSccpConRate_13 4488
pmIuSccpConRate_14 4489
pmIuSccpConRate_15 4489
pmIuSccpConRate_16 4489
pmIuSccpConRate_17 4490
pmIuSccpConRate_18 4490
pmIuSccpConRate_19 4490
pmIuSccpConRate_20 4490
pmIuSccpConRate_21 4491
pmIuSccpConRate_22 4491
pmIuSccpConRate_23 4491
pmIuSccpConRate_24 4492
pmIuSccpConRate_25 4492
pmIuSccpConRate_26 4492
pmIuSccpConRate_27 4493
pmIuSccpConRate_28 4493
pmIuSccpConRate_29 4493
pmIuSccpConRate_30 4494
pmIuSccpConRate_31 4494
pmIuSccpConRate_32 4494
pmIuSccpConRate_33 4494
pmIuSccpConRate_34 4495
pmIuSccpConRate_35 4495
pmIuSccpConRate_36 4495
pmIuSccpConRate_37 4496
pmIuSccpConRate_38 4496
pmIuSccpConRate_39 4496
pmMocnRedirections 4497
pmNoCchDiscardedDataFramesE 4497
pmNoCchDiscardedDataFramesL 4497
pmNoCchTimingAdjContrFrames 4498
pmNoDiscardSduDcch 4498
pmNoDiscardSduDtch 4498
pmNoInvalidRabEstablishAttempts 4499
pmNoInvalidRabReleaseAttempts 4499
pmNoIuSigEstablishAttemptCs 4499
pmNoIuSigEstablishAttemptPs 4499
pmNoIuSigEstablishSuccessCs 4500
pmNoIuSigEstablishSuccessPs 4500
pmNoOfPacketCallDuration1 4500
pmNoOfPacketCallDuration2 4501
pmNoOfPacketCallDuration3 4501
pmNoOfPacketCallDuration4 4501
pmNoOfPacketCallDurationHs1 4502
pmNoOfPacketCallDurationHs2 4502
pmNoOfPacketCallDurationHs3 4502
pmNoOfPacketCallDurationHs4 4503
pmNoOfRedirectedEmergencyCalls 4503

© Copyright IBM Corp. 2008, 2009. All Rights Reserved.

pmNoPageDiscardCmpLoadC 4503
pmNoRabEstablishFailureUeCapability 4504
pmNoReceivedSduDcch 4504
pmNoReceivedSduDtch 4504
pmNoReleaseCchWaitCuT 4505
pmNoReleaseDchRcLostT 4505
pmNoRetransPduDcch 4505
pmNoRetransPduDtch 4506
pmNoRlcErrors 4506
pmNoSbHoMeasStart 4506
pmNoSentPduDcch 4506
pmNoSentPduDtch 4507
pmNoSuccessSbHo 4507
pmPositioningReqAtt 4507
pmPositioningReqAttAgps 4508
pmPositioningReqAttCellId 4508
pmPositioningReqAttEsAgps 4508
pmPositioningReqAttEsCellId 4509
pmPositioningReqReAttCellId 4509
pmPositioningReqReAttEsCellId 4509
pmPositioningReqReAttSuccCellId 4510
pmPositioningReqSucc 4510
pmPositioningReqSuccAgps 4510
pmPositioningReqSuccAgpsQosSucc 4511
pmPositioningReqSuccCellId 4511
pmPositioningReqSuccCellIdQosSucc 4511
pmPositioningReqSuccEsAgps 4512
pmPositioningReqSuccEsAgpsQosSucc 4512
pmPositioningReqUnsuccAgpsAbort 4512
pmSamplesDchDchDlRcvDelay_0 4513
pmSamplesDchDchDlRcvDelay_1 4513
pmSamplesDchDchDlRcvDelay_2 4513
pmSamplesDchDchJitter 4514
pmSamplesDchDchLatency_0 4514
pmSamplesDchDchLatency_1 4514
pmSamplesDchDchLatency_2 4515
pmSamplesDchDlDelay_0 4515
pmSamplesDchDlDelay_1 4515
pmSamplesDchDlDelay_2 4516
pmSamplesHsDchDlRcvDelay_0 4516
pmSamplesHsDchDlRcvDelay_1 4516
pmSamplesHsDchDlRcvDelay_2 4517
pmSamplesHsDchJitter 4517
pmSamplesHsDchLatency_0 4517
pmSamplesHsDchLatency_1 4518
pmSamplesHsDchLatency_2 4518
pmSamplesHsDlDelay_0 4518
pmSamplesHsDlDelay_1 4519
pmSamplesHsDlDelay_2 4519
pmSamplesHsEulDlRcvDelay_0 4519
pmSamplesHsEulDlRcvDelay_1 4520

pmSamplesHsEulDlRcvDelay_2 4520
pmSamplesHsEulJitter 4520
pmSamplesHsEulLatency_0 4521
pmSamplesHsEulLatency_1 4521
pmSamplesHsEulLatency_2 4521
pmSentPacketData1 4522
pmSentPacketData2 4522
pmSentPacketData3 4522
pmSentPacketData4 4523
pmSentPacketDataHs1 4523
pmSentPacketDataHs2 4523
pmSentPacketDataHs3 4524
pmSentPacketDataHs4 4524
pmSentPacketDataInclRetrans1 4524
pmSentPacketDataInclRetrans2 4525
pmSentPacketDataInclRetrans3 4525
pmSentPacketDataInclRetrans4 4525
pmSentPacketDataInclRetransHs1 4526
pmSentPacketDataInclRetransHs2 4526
pmSentPacketDataInclRetransHs3 4526
pmSentPacketDataInclRetransHs4 4527
pmSofterHoAttemptNonIur 4527
pmSofterHoSuccessNonIur 4527
pmSoftHoAttemptNonIur 4528
pmSoftHoSuccessNonIur 4528
pmSoftSofterHoAttemptIur 4528
pmSoftSofterHoSuccessIur 4529
pmSumDchDchDlRcvDelay_0 4529
pmSumDchDchDlRcvDelay_1 4529
pmSumDchDchDlRcvDelay_2 4530
pmSumDchDchJitter 4530
pmSumDchDchLatency_0 4530
pmSumDchDchLatency_1 4531
pmSumDchDchLatency_2 4531
pmSumDchDlDelay_0 4531
pmSumDchDlDelay_1 4532
pmSumDchDlDelay_2 4532
pmSumHsDchDlRcvDelay_0 4532
pmSumHsDchDlRcvDelay_1 4533
pmSumHsDchDlRcvDelay_2 4533
pmSumHsDchJitter 4533
pmSumHsDchLatency_0 4534
pmSumHsDchLatency_1 4534
pmSumHsDchLatency_2 4534
pmSumHsDlDelay_0 4535
pmSumHsDlDelay_1 4535
pmSumHsDlDelay_2 4535
pmSumHsEulDlRcvDelay_0 4536
pmSumHsEulDlRcvDelay_1 4536
pmSumHsEulDlRcvDelay_2 4536
pmSumHsEulJitter 4537

© Copyright IBM Corp. 2008, 2009. All Rights Reserved.

pmSumHsEulLatency_0 4537
pmSumHsEulLatency_1 4537
pmSumHsEulLatency_2 4537
pmTotalPacketDuration1 4538
pmTotalPacketDuration2 4538
pmTotalPacketDuration3 4538
pmTotalPacketDuration4 4539
pmTotalPacketDurationHs1 4539
pmTotalPacketDurationHs2 4539
pmTotalPacketDurationHs3 4540
pmTotalPacketDurationHs4 4540
pmTotNoSbHo 4540
pO1 4541
pO2 4541
pO3 4541
polygonRadiusFactor 4541
psStreaming128 4542
psStreamingInactivityTimer 4542
pwrEstFact1 4542
pwrEstFact2 4542
pwrEstFact3 4543
readSfnInd 4543
recordingStorageSize 4543
releaseConnOffset 4543
repeatTimer 4544
reportHysteresis 4544
reportingInterval1a 4544
reportingInterval1c 4544
reportingRange1a 4545
reportingRange1b 4545
reportPeriodicity 4545
RNC_nesw 4545
RNC_RELEASE 4546
rncId_CM 4546
rpp 4546
rtwpFilter 4546
selHoSup 4547
serviceBasedHoSupport 4547
sib11RepPeriod 4547
sib11StartPos 4548
sib12RepPeriod 4548
sib12StartPos 4548
sib1RepPeriod 4549
sib1StartPos 4549
sib3RepPeriod 4549
sib3StartPos 4549
sib5RepPeriod 4550
sib5StartPos 4550
sib7ExpirationTimeFactor 4550
sib7RepPeriod 4551
sib7StartPos 4551

sirErrorMode 4551
sirErrorReportHyst 4552
sirEstFilter 4552
sirIncreaseMask 4552
sirMax 4552
sirMin 4552
state128_128Supported 4553
t300 4553
t302 4553
t305 4554
t307 4554
t308 4554
t309 4554
t313 4555
t316 4555
t317 4555
tCellChange 4555
thpReportInterval 4555
timeReleaseIuPs 4556
timeRelocoverall 4556
timeRelocprep 4556
timeRelocsup 4556
timeToTrigger1a 4557
timeToTrigger1b 4557
timeToTrigger1c 4557
timeToTrigger1d 4557
timeToTrigger2dEcno 4558
timeToTrigger2dRscp 4558
timeToTrigger2fEcno 4558
timeToTrigger2fRscp 4559
timeToTrigger3a 4559
timeTrigg4_2b 4559
timeTrigg6a 4559
timeTrigg6b 4560
tmStopGsmMeas 4560
toAE 4560
toAWE 4560
toAWS 4561
tProcRbsDl 4561
tProcRncDl 4561
transmittedCodePowerFilter 4561
triggerCondOne1b 4562
triggerCondTwo1a 4562
tsHoInIratHo 4562
uetrFileSize 4562
ueTxPowerThresh6a 4563
ueTxPowerThresh6b 4563
ulInitSirTargetExtraHigh 4563
ulInitSirTargetHigh 4563
ulInitSirTargetLow 4564
ulInitSirTargetSrb 4564

© Copyright IBM Corp. 2008, 2009. All Rights Reserved.

ulOuterLoopRegulator 4564
ulRlcBufUpswitch 4564
ulRlcBufUpswitchMrab 4565
ulSirGuard 4565
ulSirStep 4565
uncertaintyAltitude 4565
updateCellReattsNo 4566
upswitchPwrMargin 4566
upswitchTimer 4566
upswitchTimerUl 4566
usedFreqRelThresh2fEcno 4567
usedFreqRelThresh2fRscp 4567
usedFreqRelThresh4_2bEcno 4567
usedFreqRelThresh4_2bRscp 4567
usedFreqThresh2dEcnoDrnc 4568
usedFreqThresh2dRscpDrnc 4568
usedFreqW2d 4568
usedFreqW2f 4568
usedFreqW4_2b 4569
userLabel 4569
userLabel_CM 4569
utranFilterCoefficient3 4569
utranRelThresh3aEcno 4570
utranRelThresh3aRscp 4570
utranRelThreshRscp 4570
utranRnsConfidence 4570
utranRnsUncertaintyRadius 4571
utranW3a 4571
w1a 4571
w1b 4571
RncCapacity Primitive Calculations 4572
GRAPHmultiLineSeparator 4572
NUMDAYS 4572
NUMHOURS 4572
RncCapacity Peg Counts 4572
PERLENSEC 4572
PERLENSEC_K 4573
pmCapacityAllocAtt 4573
pmCapacityAllocRej 4573
pmCapacityLimit 4574
pmCapacityUtilization_00 4574
pmCapacityUtilization_01 4574
pmCapacityUtilization_02 4575
pmCapacityUtilization_03 4575
pmCapacityUtilization_04 4576
pmCapacityUtilization_05 4576
pmCapacityUtilization_06 4576
pmCapacityUtilization_07 4577
pmCapacityUtilization_08 4577
pmCapacityUtilization_09 4578
pmSamplesCapacity 4578

Updated: 2009-07-22

pmSamplesCapacityRegulation 4578
pmSumCapacity 4579
pmSumCapacityRegulation 4579
pmSumSqrCapacity 4579
pmTotalTimeCapacityRegulated 4580
RNCModule Primitive Calculations 4580
GRAPHmultiLineSeparator 4580
NUMDAYS 4580
NUMHOURS 4580
RNCModule Peg Counts 4581
availabilityStatus 4581
operationalState 4581
PERLENSEC 4581
PERLENSEC_K 4581
reservedBy 4582
RNC_RELEASE 4582
rncModuleResourceId 4582
userLabel 4583
SccpAcctCriteria_NodeB Primitive Calculations 4583
GRAPHmultiLineSeparator 4583
NUMDAYS 4583
NUMHOURS 4583
SccpAcctCriteria_NodeB Peg Counts 4583
pmNoOfMsg 4583
pmNoOfOctets 4584
SccpAcctCriteria_RNC Primitive Calculations 4584
GRAPHmultiLineSeparator 4584
NUMDAYS 4584
NUMHOURS 4584
SccpAcctCriteria_RNC Peg Counts 4585
pmNoOfMsg 4585
pmNoOfOctets 4585
SccpAp_NodeB Primitive Calculations 4585
GRAPHmultiLineSeparator 4585
NUMDAYS 4586
NUMHOURS 4586
SccpAp_NodeB Peg Counts 4586
PERLENSEC 4586
PERLENSEC_K 4586
SccpAp_RNC Primitive Calculations 4587
GRAPHmultiLineSeparator 4587
NUMDAYS 4587
NUMHOURS 4587
SccpAp_RNC Peg Counts 4587
PERLENSEC 4587
PERLENSEC_K 4587
Sccpch Primitive Calculations 4588
GRAPHmultiLineSeparator 4588
NUMDAYS 4588
NUMHOURS 4588

© Copyright IBM Corp. 2008, 2009. All Rights Reserved.

Sccpch Peg Counts 4588
NodeB_RELEASE 4588
PERLENSEC 4589
PERLENSEC_K 4589
pmMbmsSccpchTransmittedTfc_00 4589
pmMbmsSccpchTransmittedTfc_01 4590
pmMbmsSccpchTransmittedTfc_02 4590
pmMbmsSccpchTransmittedTfc_03 4590
pmMbmsSccpchTransmittedTfc_04 4591
pmMbmsSccpchTransmittedTfc_05 4591
pmMbmsSccpchTransmittedTfc_06 4591
pmMbmsSccpchTransmittedTfc_07 4592
pmMbmsSccpchTransmittedTfc_08 4592
pmMbmsSccpchTransmittedTfc_09 4592
pmMbmsSccpchTransmittedTfc_10 4593
pmMbmsSccpchTransmittedTfc_11 4593
pmMbmsSccpchTransmittedTfc_12 4593
pmMbmsSccpchTransmittedTfc_13 4594
pmMbmsSccpchTransmittedTfc_14 4594
pmMbmsSccpchTransmittedTfc_15 4594
pmMbmsSccpchTransmittedTfc_16 4595
pmMbmsSccpchTransmittedTfc_17 4595
pmMbmsSccpchTransmittedTfc_18 4595
pmMbmsSccpchTransmittedTfc_19 4596
pmMbmsSccpchTransmittedTfc_20 4596
pmMbmsSccpchTransmittedTfc_21 4596
pmNoOfTfc1OnFach1 4597
pmNoOfTfc2OnFach1 4597
pmNoOfTfc3OnFach2 4597
SccpPolicing_NodeB Primitive Calculations 4597
GRAPHmultiLineSeparator 4597
NUMDAYS 4598
NUMHOURS 4598
SccpPolicing_NodeB Peg Counts 4598
pmNoOfRejectMsg 4598
SccpPolicing_RNC Primitive Calculations 4598
GRAPHmultiLineSeparator 4598
NUMDAYS 4599
NUMHOURS 4599
SccpPolicing_RNC Peg Counts 4599
pmNoOfRejectMsg 4599
SccpScrc_NodeB Primitive Calculations 4599
GRAPHmultiLineSeparator 4599
NUMDAYS 4599
NUMHOURS 4600
SccpScrc_NodeB Peg Counts 4600
PERLENSEC 4600
PERLENSEC_K 4600
pmNoOfConnectFailure 4600
pmNoOfHopCounterViolation 4601

pmNoOfRoutingFailNetworkCongest 4601
pmNoOfRoutingFailNoTransAddrOfSuchNature 4601
pmNoOfRoutingFailNoTransSpecificAddr 4602
pmNoOfRoutingFailReasonUnknown 4602
pmNoOfRoutingFailSubsysUnavail 4602
pmNoOfRoutingFailUnequippedSubsys 4603
pmNoOfRoutingFailure 4603
pmNoOfRoutingFailurePointCodeUnAvail 4603
SccpScrc_RNC Primitive Calculations 4604
GRAPHmultiLineSeparator 4604
NUMDAYS 4604
NUMHOURS 4604
SccpScrc_RNC Peg Counts 4604
PERLENSEC 4604
PERLENSEC_K 4604
pmNoOfConnectFailure 4605
pmNoOfHopCounterViolation 4605
pmNoOfRoutingFailNetworkCongest 4605
pmNoOfRoutingFailNoTransAddrOfSuchNature 4606
pmNoOfRoutingFailNoTransSpecificAddr 4606
pmNoOfRoutingFailReasonUnknown 4606
pmNoOfRoutingFailSubsysUnavail 4607
pmNoOfRoutingFailUnequippedSubsys 4607
pmNoOfRoutingFailure 4607
pmNoOfRoutingFailurePointCodeUnAvail 4608
SccpSp_NodeB Primitive Calculations 4608
GRAPHmultiLineSeparator 4608
NUMDAYS 4608
NUMHOURS 4608
SccpSp_NodeB Peg Counts 4608
PERLENSEC 4608
PERLENSEC_K 4609
pmNoOfConInUseExceedHighWaterMark 4609
pmNoOfConInUseReceededLowWaterMark 4609
pmNoOfCREFRecFromNL 4610
pmNoOfCREFSentToNL 4610
pmNoOfCRRec 4610
pmNoOfCRSent 4611
pmNoOfDT1Rec 4611
pmNoOfDT1Sent 4611
pmNoOfERRRec 4612
pmNoOfERRSent 4612
pmNoOfRLSDRecFromNL 4612
pmNoOfRLSDSentToNL 4613
pmNoOfSubsysAllowedSent 4613
pmNoOfUDTRec 4613
pmNoOfUDTSent 4613
pmNoOfUDTSRec 4614
pmNoOfUDTSSent 4614
pmNoOfXUDTRec 4614

© Copyright IBM Corp. 2008, 2009. All Rights Reserved.

pmNoOfXUDTSent 4615
pmNoOfXUDTSRec 4615
pmNoOfXUDTSSent 4615
SccpSp_RNC Primitive Calculations 4616
GRAPHmultiLineSeparator 4616
NUMDAYS 4616
NUMHOURS 4616
SccpSp_RNC Peg Counts 4616
PERLENSEC 4616
PERLENSEC_K 4617
pmNoOfConInUseExceedHighWaterMark 4617
pmNoOfConInUseReceededLowWaterMark 4617
pmNoOfCREFRecFromNL 4618
pmNoOfCREFSentToNL 4618
pmNoOfCRRec 4618
pmNoOfCRSent 4618
pmNoOfDT1Rec 4619
pmNoOfDT1Sent 4619
pmNoOfERRRec 4619
pmNoOfERRSent 4620
pmNoOfRLSDRecFromNL 4620
pmNoOfRLSDSentToNL 4620
pmNoOfSubsysAllowedSent 4621
pmNoOfUDTRec 4621
pmNoOfUDTSent 4621
pmNoOfUDTSRec 4622
pmNoOfUDTSSent 4622
pmNoOfXUDTRec 4622
pmNoOfXUDTSent 4622
pmNoOfXUDTSRec 4623
pmNoOfXUDTSSent 4623
Sctp_NodeB Primitive Calculations 4623
GRAPHmultiLineSeparator 4623
NUMDAYS 4624
NUMHOURS 4624
Sent_SCTP_data_chunks 4624
Sctp_NodeB Peg Counts 4624
pmSctpAborted 4624
pmSctpActiveEstab 4624
pmSctpCurrEstab 4625
pmSctpPassiveEstab 4625
pmSctpShutdowns 4625
pmSctpStatAssocOutOfBlue 4626
pmSctpStatChecksumErrorCounter 4626
pmSctpStatCommResume 4626
pmSctpStatCommStop 4627
pmSctpStatFragmentedUserMsg 4627
pmSctpStatOutOfOrderRecChunks 4627
pmSctpStatOutOfOrderSendChunks 4628
pmSctpStatReassembledUserMsg 4628

pmSctpStatRecChunks 4628
pmSctpStatRecChunksDropped 4629
pmSctpStatReceivedControlChunks 4629
pmSctpStatReceivedPackages 4629
pmSctpStatRetransChunks 4630
pmSctpStatSentChunks 4630
pmSctpStatSentChunksDropped 4630
pmSctpStatSentControlChunks 4631
pmSctpStatSentPackages 4631
Sctp_RNC Primitive Calculations 4631
GRAPHmultiLineSeparator 4631
NUMDAYS 4632
NUMHOURS 4632
Sent_SCTP_data_chunks 4632
Sctp_RNC Peg Counts 4632
pmSctpAborted 4632
pmSctpActiveEstab 4632
pmSctpCurrEstab 4633
pmSctpPassiveEstab 4633
pmSctpShutdowns 4633
pmSctpStatAssocOutOfBlue 4634
pmSctpStatChecksumErrorCounter 4634
pmSctpStatCommResume 4634
pmSctpStatCommStop 4635
pmSctpStatFragmentedUserMsg 4635
pmSctpStatOutOfOrderRecChunks 4635
pmSctpStatOutOfOrderSendChunks 4636
pmSctpStatReassembledUserMsg 4636
pmSctpStatRecChunks 4636
pmSctpStatRecChunksDropped 4637
pmSctpStatReceivedControlChunks 4637
pmSctpStatReceivedPackages 4637
pmSctpStatRetransChunks 4638
pmSctpStatSentChunks 4638
pmSctpStatSentChunksDropped 4638
pmSctpStatSentControlChunks 4639
pmSctpStatSentPackages 4639
Sector Primitive Calculations 4639
GRAPHmultiLineSeparator 4639
NUMDAYS 4640
NUMHOURS 4640
Service Primitive Calculations 4640
GRAPHmultiLineSeparator 4640
NUMDAYS 4640
NUMHOURS 4640
Slot_NodeB Primitive Calculations 4640
GRAPHmultiLineSeparator 4640
NUMDAYS 4641
NUMHOURS 4641
Slot_RNC Primitive Calculations 4641

© Copyright IBM Corp. 2008, 2009. All Rights Reserved.

GRAPHmultiLineSeparator 4641
MainProcessorLoadRNC_Slot 4641
NUMDAYS 4641
NUMHOURS 4641
SpbDeviceGroup_NodeB Primitive Calculations 4642
GRAPHmultiLineSeparator 4642
NUMDAYS 4642
NUMHOURS 4642
SpbDeviceGroup_NodeB Peg Counts 4642
NodeB_RELEASE 4642
PERLENSEC 4642
PERLENSEC_K 4643
SpbDeviceGroup_RNC Primitive Calculations 4643
GRAPHmultiLineSeparator 4643
NUMDAYS 4643
NUMHOURS 4643
SpbDeviceGroup_RNC Peg Counts 4644
PERLENSEC 4644
PERLENSEC_K 4644
RNC_RELEASE 4644
SpbDeviceSet_NodeB Primitive Calculations 4645
GRAPHmultiLineSeparator 4645
NUMDAYS 4645
NUMHOURS 4645
SpbDeviceSet_NodeB Peg Counts 4645
NodeB_RELEASE 4645
PERLENSEC 4645
PERLENSEC_K 4646
SpbDeviceSet_RNC Primitive Calculations 4646
GRAPHmultiLineSeparator 4646
NUMDAYS 4646
NUMHOURS 4646
SpbDeviceSet_RNC Peg Counts 4647
PERLENSEC 4647
PERLENSEC_K 4647
RNC_RELEASE 4647
SpDevicePool Primitive Calculations 4648
GRAPHmultiLineSeparator 4648
NUMDAYS 4648
NUMHOURS 4648
Sts1SpeTtp_NodeB Primitive Calculations 4648
GRAPHmultiLineSeparator 4648
NUMDAYS 4648
NUMHOURS 4648
Sts1SpeTtp_NodeB Peg Counts 4649
NodeB_RELEASE 4649
PERLENSEC 4649
PERLENSEC_K 4649
pmEsp 4650
pmSesp 4650

Updated: 2009-07-22

pmUasp 4650
Sts1SpeTtp_RNC Primitive Calculations 4651
GRAPHmultiLineSeparator 4651
NUMDAYS 4651
NUMHOURS 4651
Sts1SpeTtp_RNC Peg Counts 4651
PERLENSEC 4651
PERLENSEC_K 4651
pmEsp 4652
pmSesp 4652
pmUasp 4652
RNC_RELEASE 4653
Sts3CspeTtp_NodeB Primitive Calculations 4653
GRAPHmultiLineSeparator 4653
NUMDAYS 4653
NUMHOURS 4653
Sts3CspeTtp_NodeB Peg Counts 4653
NodeB_RELEASE 4654
PERLENSEC 4654
PERLENSEC_K 4654
pmEsp 4654
pmSesp 4655
pmUasp 4655
Sts3CspeTtp_RNC Primitive Calculations 4655
GRAPHmultiLineSeparator 4655
NUMDAYS 4656
NUMHOURS 4656
Sts3CspeTtp_RNC Peg Counts 4656
PERLENSEC 4656
PERLENSEC_K 4656
pmEsp 4656
pmSesp 4657
pmUasp 4657
RNC_RELEASE 4657
Subrack_NodeB Primitive Calculations 4658
GRAPHmultiLineSeparator 4658
NUMDAYS 4658
NUMHOURS 4658
Subrack_RNC Primitive Calculations 4658
GRAPHmultiLineSeparator 4658
MainProcessorLoadRNC_Subrack 4659
NUMDAYS 4659
NUMHOURS 4659
System Primitive Calculations 4659
GRAPHmultiLineSeparator 4659
NUMDAYS 4659
NUMHOURS 4659
T1Ttp_NodeB Primitive Calculations 4660
GRAPHmultiLineSeparator 4660
NUMDAYS 4660

© Copyright IBM Corp. 2008, 2009. All Rights Reserved.

NUMHOURS 4660
T1Ttp_NodeB Peg Counts 4660
NodeB_RELEASE 4660
PERLENSEC 4660
PERLENSEC_K 4661
pmEs 4661
pmSes 4661
pmUas 4662
T1Ttp_RNC Primitive Calculations 4662
GRAPHmultiLineSeparator 4662
NUMDAYS 4662
NUMHOURS 4662
T1Ttp_RNC Peg Counts 4663
PERLENSEC 4663
PERLENSEC_K 4663
pmEs 4663
pmSes 4663
pmUas 4664
RNC_RELEASE 4664
T3PhysPathTerm_NodeB Primitive Calculations 4664
GRAPHmultiLineSeparator 4665
NUMDAYS 4665
NUMHOURS 4665
T3PhysPathTerm_NodeB Peg Counts 4665
NodeB_RELEASE 4665
PERLENSEC 4665
pmEs 4666
pmEsCpp 4666
pmSes 4666
pmSesCpp 4667
pmUas 4667
T3PhysPathTerm_RNC Primitive Calculations 4667
GRAPHmultiLineSeparator 4667
NUMDAYS 4668
NUMHOURS 4668
T3PhysPathTerm_RNC Peg Counts 4668
PERLENSEC 4668
pmEs 4668
pmEsCpp 4669
pmSes 4669
pmSesCpp 4669
pmUas 4670
RNC_RELEASE 4670
ToneSenderService Primitive Calculations 4670
GRAPHmultiLineSeparator 4670
NUMDAYS 4670
NUMHOURS 4670
p_Seizures_Sucess_Rate 4671
ToneSenderService Peg Counts 4671
PERLENSEC 4671

Updated: 2009-07-22

RNC_RELEASE 4671
TransportNetw_NodeB Primitive Calculations 4671
GRAPHmultiLineSeparator 4672
NUMDAYS 4672
NUMHOURS 4672
TransportNetw_NodeB Peg Counts 4672
PERLENSEC 4672
PERLENSEC_K 4672
pmHDelayVarBest10Pct 4673
pmHDelayVarBest1Pct 4673
pmHDelayVarBest50Pct 4673
pmMaxDelayVariation 4674
TransportNetw_RNC Primitive Calculations 4674
GRAPHmultiLineSeparator 4674
NUMDAYS 4674
NUMHOURS 4674
TransportNetw_RNC Peg Counts 4675
PERLENSEC 4675
PERLENSEC_K 4675
pmHDelayVarBest10Pct 4675
pmHDelayVarBest1Pct 4676
pmHDelayVarBest50Pct 4676
pmMaxDelayVariation 4676
TsService Primitive Calculations 4677
GRAPHmultiLineSeparator 4677
NUMDAYS 4677
NUMHOURS 4677
p_Seizures_Sucess_Rate 4677
TsService Peg Counts 4677
PERLENSEC 4678
RNC_RELEASE 4678
UniSaalTp_NodeB Primitive Calculations 4678
GRAPHmultiLineSeparator 4678
NUMDAYS 4678
NUMHOURS 4679
UniSaalTp_NodeB Peg Counts 4679
NodeB_RELEASE 4679
PERLENSEC 4679
PERLENSEC_K 4679
pmLinkInServiceTime 4680
pmNoOfAllSLFailures 4680
pmNoOfLocalCongestions 4680
pmNoOfNoResponses 4681
pmNoOfOtherErrors 4681
pmNoOfProtocolErrors 4681
pmNoOfReceivedSDUs 4682
pmNoOfRemoteCongestions 4682
pmNoOfSentSDUs 4682
pmNoOfSequenceDataLosses 4682
pmNoOfUnsuccReTransmissions 4683

© Copyright IBM Corp. 2008, 2009. All Rights Reserved.

UniSaalTp_RNC Primitive Calculations 4683
GRAPHmultiLineSeparator 4683
NUMDAYS 4683
NUMHOURS 4683
UniSaalTp_RNC Peg Counts 4684
PERLENSEC 4684
PERLENSEC_K 4684
pmLinkInServiceTime 4684
pmNoOfAllSLFailures 4685
pmNoOfLocalCongestions 4685
pmNoOfNoResponses 4685
pmNoOfOtherErrors 4686
pmNoOfProtocolErrors 4686
pmNoOfReceivedSDUs 4686
pmNoOfRemoteCongestions 4687
pmNoOfSentSDUs 4687
pmNoOfSequenceDataLosses 4687
pmNoOfUnsuccReTransmissions 4687
RNC_RELEASE 4688
UplinkBaseBandPool Primitive Calculations 4688
GRAPHmultiLineSeparator 4688
k_CE_UL_CONG 4688
NUMDAYS 4688
NUMHOURS 4689
UplinkBaseBandPool Peg Counts 4689
NodeB_RELEASE 4689
PERLENSEC 4689
PERLENSEC_K 4689
pmApomcOfRachCap 4690
pmApomcOfRakeRecUsed 4690
pmApomcOfUlLinkCap 4690
pmCapacityAllocAttUlCe 4691
pmCapacityAllocRejUlCe 4691
pmCapacityUlCe_00 4691
pmCapacityUlCe_01 4692
pmCapacityUlCe_02 4692
pmCapacityUlCe_03 4693
pmCapacityUlCe_04 4693
pmCapacityUlCe_05 4694
pmCapacityUlCe_06 4694
pmCapacityUlCe_07 4694
pmCapacityUlCe_08 4695
pmCapacityUlCe_09 4695
pmCapacityUlCe_10 4696
pmHwCePoolEul_00 4696
pmHwCePoolEul_01 4696
pmHwCePoolEul_02 4697
pmHwCePoolEul_03 4697
pmHwCePoolEul_04 4698
pmHwCePoolEul_05 4698

pmHwCePoolEul_06 4698
pmHwCePoolEul_07 4699
pmHwCePoolEul_08 4699
pmHwCePoolEul_09 4699
pmHwCePoolEul_10 4700
pmHwCePoolEul_11 4700
pmHwCePoolEul_12 4700
pmHwCePoolEul_13 4701
pmHwCePoolEul_14 4701
pmHwCePoolEul_15 4702
pmHwCePoolEul_16 4702
pmHwCePoolEul_17 4702
pmHwCePoolEul_18 4703
pmHwCePoolEul_19 4703
pmHwCePoolEul_20 4703
pmHwCePoolEul_21 4704
pmHwCePoolEul_22 4704
pmHwCePoolEul_23 4704
pmHwCePoolEul_24 4705
pmHwCePoolEul_25 4705
pmHwCePoolEul_26 4706
pmHwCePoolEul_27 4706
pmHwCePoolEul_28 4706
pmHwCePoolEul_29 4707
pmHwCePoolEul_30 4707
pmHwCePoolEul_31 4707
pmHwCePoolEul_32 4708
pmHwCePoolEul_33 4708
pmHwCePoolEul_34 4708
pmHwCePoolEul_35 4709
pmHwCePoolEul_36 4709
pmHwCePoolEul_37 4710
pmHwCePoolEul_38 4710
pmHwCePoolEul_39 4710
pmHwCePoolEul_40 4711
pmHwCePoolEul_41 4711
pmHwCePoolEul_42 4711
pmHwCePoolEul_43 4712
pmHwCePoolEul_44 4712
pmHwCePoolEul_45 4712
pmHwCePoolEul_46 4713
pmHwCePoolEul_47 4713
pmHwCePoolEul_48 4714
pmHwCePoolEul_49 4714
pmHwCePoolEul_50 4714
pmHwCePoolEul_51 4715
pmHwCePoolEul_52 4715
pmHwCePoolEul_53 4715
pmHwCePoolEul_54 4716
pmHwCePoolEul_55 4716
pmNoOfIbho 4716

© Copyright IBM Corp. 2008, 2009. All Rights Reserved.

pmNoOfRadioLinksSf128_00 4717
pmNoOfRadioLinksSf128_01 4717
pmNoOfRadioLinksSf128_02 4717
pmNoOfRadioLinksSf128_03 4718
pmNoOfRadioLinksSf128_04 4718
pmNoOfRadioLinksSf128_05 4718
pmNoOfRadioLinksSf128_06 4719
pmNoOfRadioLinksSf128_07 4719
pmNoOfRadioLinksSf128_08 4719
pmNoOfRadioLinksSf128_09 4719
pmNoOfRadioLinksSf128_10 4720
pmNoOfRadioLinksSf128_11 4720
pmNoOfRadioLinksSf128_12 4720
pmNoOfRadioLinksSf128_13 4721
pmNoOfRadioLinksSf128_14 4721
pmNoOfRadioLinksSf16_00 4721
pmNoOfRadioLinksSf16_01 4722
pmNoOfRadioLinksSf16_02 4722
pmNoOfRadioLinksSf16_03 4722
pmNoOfRadioLinksSf16_04 4723
pmNoOfRadioLinksSf16_05 4723
pmNoOfRadioLinksSf16_06 4723
pmNoOfRadioLinksSf16_07 4723
pmNoOfRadioLinksSf16_08 4724
pmNoOfRadioLinksSf16_09 4724
pmNoOfRadioLinksSf16_10 4724
pmNoOfRadioLinksSf16_11 4725
pmNoOfRadioLinksSf16_12 4725
pmNoOfRadioLinksSf16_13 4725
pmNoOfRadioLinksSf16_14 4726
pmNoOfRadioLinksSf256_00 4726
pmNoOfRadioLinksSf256_01 4726
pmNoOfRadioLinksSf256_02 4727
pmNoOfRadioLinksSf256_03 4727
pmNoOfRadioLinksSf256_04 4727
pmNoOfRadioLinksSf256_05 4727
pmNoOfRadioLinksSf256_06 4728
pmNoOfRadioLinksSf256_07 4728
pmNoOfRadioLinksSf256_08 4728
pmNoOfRadioLinksSf256_09 4729
pmNoOfRadioLinksSf256_10 4729
pmNoOfRadioLinksSf256_11 4729
pmNoOfRadioLinksSf256_12 4730
pmNoOfRadioLinksSf256_13 4730
pmNoOfRadioLinksSf256_14 4730
pmNoOfRadioLinksSf32_00 4731
pmNoOfRadioLinksSf32_01 4731
pmNoOfRadioLinksSf32_02 4731
pmNoOfRadioLinksSf32_03 4731
pmNoOfRadioLinksSf32_04 4732
pmNoOfRadioLinksSf32_05 4732

pmNoOfRadioLinksSf32_06 4732
pmNoOfRadioLinksSf32_07 4733
pmNoOfRadioLinksSf32_08 4733
pmNoOfRadioLinksSf32_09 4733
pmNoOfRadioLinksSf32_10 4734
pmNoOfRadioLinksSf32_11 4734
pmNoOfRadioLinksSf32_12 4734
pmNoOfRadioLinksSf32_13 4735
pmNoOfRadioLinksSf32_14 4735
pmNoOfRadioLinksSf4_00 4735
pmNoOfRadioLinksSf4_01 4735
pmNoOfRadioLinksSf4_02 4736
pmNoOfRadioLinksSf4_03 4736
pmNoOfRadioLinksSf4_04 4736
pmNoOfRadioLinksSf4_05 4737
pmNoOfRadioLinksSf4_06 4737
pmNoOfRadioLinksSf4_07 4737
pmNoOfRadioLinksSf4_08 4738
pmNoOfRadioLinksSf4_09 4738
pmNoOfRadioLinksSf4_10 4738
pmNoOfRadioLinksSf4_11 4739
pmNoOfRadioLinksSf4_12 4739
pmNoOfRadioLinksSf4_13 4739
pmNoOfRadioLinksSf4_14 4739
pmNoOfRadioLinksSf64_00 4740
pmNoOfRadioLinksSf64_01 4740
pmNoOfRadioLinksSf64_02 4740
pmNoOfRadioLinksSf64_03 4741
pmNoOfRadioLinksSf64_04 4741
pmNoOfRadioLinksSf64_05 4741
pmNoOfRadioLinksSf64_06 4742
pmNoOfRadioLinksSf64_07 4742
pmNoOfRadioLinksSf64_08 4742
pmNoOfRadioLinksSf64_09 4743
pmNoOfRadioLinksSf64_10 4743
pmNoOfRadioLinksSf64_11 4743
pmNoOfRadioLinksSf64_12 4743
pmNoOfRadioLinksSf64_13 4744
pmNoOfRadioLinksSf64_14 4744
pmNoOfRadioLinksSf8_00 4744
pmNoOfRadioLinksSf8_01 4745
pmNoOfRadioLinksSf8_02 4745
pmNoOfRadioLinksSf8_03 4745
pmNoOfRadioLinksSf8_04 4746
pmNoOfRadioLinksSf8_05 4746
pmNoOfRadioLinksSf8_06 4746
pmNoOfRadioLinksSf8_07 4747
pmNoOfRadioLinksSf8_08 4747
pmNoOfRadioLinksSf8_09 4747
pmNoOfRadioLinksSf8_10 4747
pmNoOfRadioLinksSf8_11 4748

© Copyright IBM Corp. 2008, 2009. All Rights Reserved.

pmNoOfRadioLinksSf8_12 4748
pmNoOfRadioLinksSf8_13 4748
pmNoOfRadioLinksSf8_14 4749
pmNoUlHwLimitEul 4749
pmSamplesCapacityUlCe 4749
pmSetupAttemptsSf128 4750
pmSetupAttemptsSf16 4750
pmSetupAttemptsSf256 4750
pmSetupAttemptsSf32 4751
pmSetupAttemptsSf4 4751
pmSetupAttemptsSf64 4751
pmSetupAttemptsSf8 4752
pmSetupFailuresSf128 4752
pmSetupFailuresSf16 4752
pmSetupFailuresSf256 4753
pmSetupFailuresSf32 4753
pmSetupFailuresSf4 4753
pmSetupFailuresSf64 4753
pmSetupFailuresSf8 4754
pmSumCapacityUlCe 4754
pmSumSqrCapacityUlCe 4754
pmUIActPeakCapUsage 4755
UpMfhService Primitive Calculations 4755
GRAPHmultiLineSeparator 4755
NUMDAYS 4755
NUMHOURS 4755
p_Seizures_Sucess_Rate 4756
UpMfhService Peg Counts 4756
PERLENSEC 4756
RNC_RELEASE 4756
Ura Primitive Calculations 4756
GRAPHmultiLineSeparator 4756
NUMDAYS 4757
NUMHOURS 4757
Ura Peg Counts 4757
PERLENSEC 4757
PERLENSEC_K 4757
pmCnInitPagingToUraUe 4758
pmSamplesRabUra 4758
pmSumRabUra 4758
pmUtranInitPagingToUraUe 4759
UtranCell Primitive Calculations 4759
AveCs12Ps0RabEstablish 4759
AveCs12Ps64RabEstablish 4759
AveCs12RabEstablish 4759
AveCs57RabEstablish 4759
AveCs64RabEstablish 4760
AvePs128RabEstablish 4760
AvePs384RabEstablish 4760
AvePs64RabEstablish 4760

Average_CS_Speech_Users_per_Cell 4760
AverageBestCs12Establish 4760
AveRrcOnlyEstablish 4760
Cell_Availability 4761
Cell_Availability_Excluding_Planned_Downtime 4761
Cell_Availability_UnPlanned_Downtime 4761
Cell_Unavailability_due_Planned_Down_Time 4761
CELL_UPD_FAIL 4761
CH_SW_DCH_DCH_FAIL 4761
CH_SW_FACH_DCH_FAIL 4762
CS_64_57_Accessibility_Grade_of_Service 4762
CS_64_DL_Code_Utilization 4762
CS_Call_Completion_Succ_Rate_retry_Excluded 4762
CS_Call_Completion_Succ_Rate_retry_Included 4762
CS_Retain_Speech_Drop_Rate 4762
CS_Speech_Accessibility_Directed_retry_Excluded 4763
CS_Speech_Accessibility_Directed_retry_Included 4763
CS_Speech_Downlink_Code_Utilization 4763
CS_Speech_Downlink_Code_Utilization_per_Cell 4763
CS_Speech_Drop_Rate 4763
CS_Speech_Erlang 4764
CS_Speech_Grade_of_Service 4764
CS_Speech_Grade_of_Service_RRC_Blocking 4764
CS_Speech_Retainability 4764
CS57_Accessibility 4764
CS57_Call_Completion_Succ_Rate 4764
CS57_Drop_Rate 4765
CS57_Retainability 4765
CS64_Accessibility 4765
CS64_Call_Completion_Succ_Rate 4765
CS64_Drop_Rate 4765
CS64_Retainability 4765
ebsCountDLChCodeTreeUsage0to24 4766
ebsCountDLChCodeTreeUsage25to49 4766
ebsCountDLChCodeTreeUsage50to59 4766
ebsCountDLChCodeTreeUsage60to69 4766
ebsCountDLChCodeTreeUsage70to74 4766
ebsCountDLChCodeTreeUsage75to79 4766
ebsCountDLChCodeTreeUsage80to84 4767
ebsCountDLChCodeTreeUsage85to89 4767
ebsCountDLChCodeTreeUsage90to94 4767
GRAPHmultiLineSeparator 4767
GSM_CELL_CHANGE_IN_FAIL 4767
GSM_CELL_CHANGE_OUT_FAIL 4767
GSM_HO_IN_FAIL 4768
GSM_HO_OUT_FAIL 4768
Handover_Reduction_Factor 4768
k_CARR_PWR_DL_AVE 4768
k_CONG_CSD 4768
k_CONG_PSD 4768
k_CONG_SPEECH 4768

© Copyright IBM Corp. 2008, 2009. All Rights Reserved.

k_DL_KB_PER_DROP 4769
k_RAB_PER_FACH 4769
k_RRC_ABNORM_DISCONN 4769
k_RRC_ABNORM_DISCONN_CS64 4769
k_RRC_ABNORM_DISCONN_PS 4769
k_RRC_ABNORM_DISCONN_RATE 4769
k_RRC_ABNORM_DISCONN_SPEECH 4770
k_RRC_ABNORM_DISCONN_STREAM 4770
k_RRC_CONN_FAIL 4770
k_RRC_CONN_FAIL_CS 4770
k_RRC_CONN_FAIL_PS 4770
k_RRC_CONN_FAIL_RATE 4770
k_SHO_AVE_ACT_SET 4771
k_SHO_AVE_ACT_SET_P2_1 4771
k_SHO_LEG_ADD_FAIL 4771
k_SHO_RATIO 4771
k_SHO_RATIO_P2_1 4772
NUMDAYS 4772
NUMHOURS 4772
p_ActDlRlcTotPacketThp 4772
p_ActDlRlcUserPacketThp 4772
p_ActUlRlcTotPacketThp 4773
p_ActUlRlcUserPacketThp 4773
PAYLOAD_CS_DL_MB 4773
PAYLOAD_CS_UL_MB 4773
PAYLOAD_PS_DL_MB 4773
PAYLOAD_PS_UL_MB 4773
PAYLOAD_TOT_DL_MB 4774
PAYLOAD_TOT_UL_MB 4774
pmAverageCompMode 4774
pmDlRlcUserPacketThpP5MD_00 4774
pmDlRlcUserPacketThpP5MD_01 4774
pmDlRlcUserPacketThpP5MD_02 4775
pmDlRlcUserPacketThpP5MD_03 4775
pmDlRlcUserPacketThpP5MD_04 4775
pmDlRlcUserPacketThpP5MD_05 4775
pmDlRlcUserPacketThpP5MD_06 4775
pmDlRlcUserPacketThpP5MD_07 4776
pmDlRlcUserPacketThpP5MD_08 4776
pmDlRlcUserPacketThpP5MD_09 4776
pmDlRlcUserPacketThpP5MD_10 4776
pmDlRlcUserPacketThpP5MD_11 4776
pmDlRlcUserPacketThpP5MD_12 4777
pmDlRlcUserPacketThpP5MD_13 4777
pmDlRlcUserPacketThpP5MD_14 4777
pmDlRlcUserPacketThpP5MD_15 4777
pmDlRlcUserPacketThpP5MD_16 4777
pmDlRlcUserPacketThpP5MD_17 4778
pmDlRlcUserPacketThpP5MD_18 4778
pmDlRlcUserPacketThpP5MD_19 4778
pmDlRlcUserPacketThpP5MD_20 4778

Updated: 2009-07-22

pmDlRlcUserPacketThpP5MD_21 4778
pmDlRlcUserPacketThpP5MD_22 4779
pmDlRlcUserPacketThpP5MD_23 4779
pmDlRlcUserPacketThpP5MD_24 4779
pmDlRlcUserPacketThpP5MD_25 4779
pmDlRlcUserPacketThpP5MD_26 4779
pmDlRlcUserPacketThpP5MD_27 4780
pmDlRlcUserPacketThpP5MD_28 4780
pmDlRlcUserPacketThpP5MD_29 4780
pmDlRlcUserPacketThpP5MD_30 4780
pmDlRlcUserPacketThpP5MD_31 4780
pmDlRlcUserPacketThpP5MD_32 4781
pmDlRlcUserPacketThpP5MD_33 4781
pmDlRlcUserPacketThpP5MD_34 4781
pmDlTrafficVolumeCs12_MB 4781
pmDlTrafficVolumeCs12Ps0_MB 4781
pmDlTrafficVolumeCs12Ps64_MB 4781
pmDlTrafficVolumeCs57_MB 4782
pmDlTrafficVolumeCs64_MB 4782
pmDlTrafficVolumePs128_MB 4782
pmDlTrafficVolumePs384_MB 4782
pmDlTrafficVolumePs64_MB 4782
pmDlTrafficVolumePsCommon_MB 4782
pmNoInCsIratHoSuccess_GsmRel 4783
pmNoOutIratCcAtt 4783
pmNoOutIratCcReturnOldCh 4783
pmNoOutIratHoAtt 4783
pmNoOutIratHoResourceAllocFail 4783
pmNoOutIratHoReturnOldChOther 4783
pmNoOutIratHoReturnOldChPhyChFail 4784
pmNoOutIratHoSuccess 4784
pmUlRlcUserPacketThpP5MD_00 4784
pmUlRlcUserPacketThpP5MD_01 4784
pmUlRlcUserPacketThpP5MD_02 4784
pmUlRlcUserPacketThpP5MD_03 4784
pmUlRlcUserPacketThpP5MD_04 4785
pmUlRlcUserPacketThpP5MD_05 4785
pmUlRlcUserPacketThpP5MD_06 4785
pmUlRlcUserPacketThpP5MD_07 4785
pmUlRlcUserPacketThpP5MD_08 4785
pmUlRlcUserPacketThpP5MD_09 4786
pmUlRlcUserPacketThpP5MD_10 4786
pmUlRlcUserPacketThpP5MD_11 4786
pmUlRlcUserPacketThpP5MD_12 4786
pmUlRlcUserPacketThpP5MD_13 4786
pmUlRlcUserPacketThpP5MD_14 4787
pmUlRlcUserPacketThpP5MD_15 4787
pmUlRlcUserPacketThpP5MD_16 4787
pmUlRlcUserPacketThpP5MD_17 4787
pmUlRlcUserPacketThpP5MD_18 4787
pmUlTrafficVolumeCs12_MB 4787

© Copyright IBM Corp. 2008, 2009. All Rights Reserved.

pmUlTrafficVolumeCs12Ps0_MB 4788
pmUlTrafficVolumeCs12Ps64_MB 4788
pmUlTrafficVolumeCs57_MB 4788
pmUlTrafficVolumeCs64_MB 4788
pmUlTrafficVolumePs128_MB 4788
pmUlTrafficVolumePs384_MB 4788
pmUlTrafficVolumePs64_MB 4789
pmUlTrafficVolumePsCommon_MB 4789
PS_interact_Accessibility_Grade_of_Service 4789
PS_interactive_Call_Completion_Rate 4789
PS_interactive_Drop_Rate 4789
PS_interactive_Retainability 4789
PS_Intreract_Accessibility 4790
PS_Stream_Accessibility 4790
PS_Stream_Call_Completion_Success_Rate 4790
PS_Stream_Drop_Rate 4790
PS_Stream_Retainability 4790
PS_Streaming_Accessibility_Grade_of_Service 4790
RefReqAllFRate 4791
ReturningRrcConnRate 4791
UtranCell Peg Counts 4791
accessClassNBarred 4791
ActDlRlcTotPacketThp_Preloaded 4791
ActDlRlcUserPacketThp_Preloaded 4792
ActUlRlcTotPacketThp_Preloaded 4792
ActUlRlcUserPacketThp_Preloaded 4792
administrativeState 4792
administrativeState_CM 4793
administrativeState_CM_HSDPA 4793
administrativeState_CM_PCH 4793
aseDlAdm 4793
aseUlAdm 4794
aseUlAdmOffset 4794
availabilityStatus 4794
availabilityStatus_CM 4794
availabilityStatus_CM_HSDPA 4795
availabilityStatus_CM_PCH 4795
bchPower 4795
beMarginAseDl 4795
beMarginAseUl 4796
beMarginDlCode 4796
beMarginDlPwr 4796
cellReserved 4796
cId 4797
compModeAdm 4797
congDlInterval 4797
congTimeOut 4798
congUlInterval 4798
coverageIndicator 4798
cqiFeedbackCycle 4798
CS_Speech_Usage_AA 4799

CS_Speech_Usage_AS 4799
CS_Speech_Usage_SS 4800
deltaAck1 4800
deltaAck2 4800
deltaCqi1 4801
deltaCqi2 4801
deltaNack1 4801
deltaNack2 4801
deviceIndId 4802
directedRetryTarget 4802
dlCodeAdm 4802
ebsCountDLChCodeTreeUsage 4802
ebsCountDLChCodeTreeUsage0to25 4803
ebsCountDLChCodeTreeUsage25to50 4803
ebsCountDLChCodeTreeUsage50to60 4803
ebsCountDLChCodeTreeUsage60to70 4804
ebsCountDLChCodeTreeUsage70to75 4804
ebsCountDLChCodeTreeUsage75to80 4804
ebsCountDLChCodeTreeUsage80to85 4805
ebsCountDLChCodeTreeUsage85to90 4805
ebsCountDLChCodeTreeUsage90to95 4805
ebsCountDLChCodeTreeUsage95to100 4806
ebsCountDLMaxPower 4806
ebsCountDLTotalASE 4806
ebsCountHSDCHReqPower 4807
ebsCountNoDLComModeUsers 4807
ebsCountNoDLConSF16 4807
ebsCountNoDLConSF32 4808
ebsCountNoDLConSF8 4808
ebsCountNoEDCHUsersNonServCell 4809
ebsCountNoEDCHUsersServCell 4809
ebsCountNoRLUsingSF16 4809
ebsCountNoRLUsingSF4 4810
ebsCountNoRLUsingSF8 4810
ebsCountNoUsersAssignedPhyHSDPAChannels 4810
ebsCountTransCarrierPower 4811
ebsCountTransCarrierPowerNonHS 4811
ebsCountULInterference 4811
ebsCountULTotalASE 4812
ebsDLChCodeTreeUsage_Average 4812
ebsDLMaxPower_Average 4812
ebsDLTotalASE_Average 4813
ebsHSDSCHReqPower_Average 4813
ebsNoDLComModeUsers_Average 4813
ebsNoDLConSF16_Average 4813
ebsNoDLConSF32_Average 4813
ebsNoDLConSF8_Average 4813
ebsNoEDCHUsersNonServCell_Average 4814
ebsNoEDCHUsersServCell_Average 4814
ebsNoRLUsingSF16_Average 4814
ebsNoRLUsingSF4_Average 4814

© Copyright IBM Corp. 2008, 2009. All Rights Reserved.

ebsNoRLUsingSF8_Average 4814
ebsNoUsersAssignedPhyHSDPACh_Average 4815
ebsPeakDLChCodeTreeUsage 4815
ebsPeakDLMaxPower 4815
ebsPeakDLTotalASE 4815
ebsPeakHSDSCHReqPower 4816
ebsPeakNoDLComModeUsers 4816
ebsPeakNoDLConSF16 4816
ebsPeakNoDLConSF32 4817
ebsPeakNoDLConSF8 4817
ebsPeakNoEDCHUsersNonServCell 4817
ebsPeakNoEDCHUsersServCell 4818
ebsPeakNoRLUsingSF16 4818
ebsPeakNoRLUsingSF4 4818
ebsPeakNoRLUsingSF8 4819
ebsPeakNoUsersAssignedPhyHSDPAChannels 4819
ebsPeakTransCarrierPower 4819
ebsPeakTransCarrierPowerNonHS 4820
ebsPeakULInterference 4820
ebsPeakULTotalASE 4820
ebsSumDLChCodeTreeUsage 4821
ebsSumDLMaxPower 4821
ebsSumDLTotalASE 4821
ebsSumHSDSCHReqPower 4822
ebsSumNoDLComModeUsers 4822
ebsSumNoDLConSF16 4822
ebsSumNoDLConSF32 4823
ebsSumNoDLConSF8 4823
ebsSumNoEDCHUsersNonServCell 4823
ebsSumNoEDCHUsersServCell 4824
ebsSumNoRLUsingSF16 4824
ebsSumNoRLUsingSF4 4824
ebsSumNoRLUsingSF8 4825
ebsSumNoUsersAssignedPhyHSDPAChannels 4825
ebsSumSqrDLChCodeTreeUsage 4825
ebsSumSqrDLMaxPower 4826
ebsSumSQRDLTotalASE 4826
ebsSumSqrHSDSCHReqPower 4826
ebsSumSqrNoDLComModeUsers 4827
ebsSumSqrNoDLConSF16 4827
ebsSumSqrNoDLConSF32 4827
ebsSumSqrNoDLConSF8 4828
ebsSumSqrNoEDCHUsersNonServCell 4828
ebsSumSqrNoEDCHUsersServCell 4828
ebsSumSqrNoRLUsingSF16 4829
ebsSumSqrNoRLUsingSF4 4829
ebsSumSqrNoRLUsingSF8 4829
ebsSumSqrNoUsersAssignedPhyHSDPAChannels 4830
ebsSumSqrTransCarrierPower 4830
ebsSumSqrTransCarrierPowerNonHS 4830
ebsSumSqrULInterference 4831

Updated: 2009-07-22

ebsSumSQRULTotalASE 4831
ebsSumTransCarrierPower 4831
ebsSumTransCarrierPowerNonHS 4832
ebsSumULInterference 4832
ebsSumULTotalASE 4832
ebsTransCarrierPower_Average 4833
ebsTransCarrierPowerNonHS_Average 4833
ebsULInterference_Average 4833
ebsULInterference_PEAK 4833
ebsULInterference_SUM 4833
ebsULTotalASE_Average 4834
ER_CS_Speech_Average_ICABH_Hold_Time_Denuminator 4834
ER_CS_Speech_Average_ICABH_Hold_Time_Numerator 4834
ER_Percentage_UEs_with_1RL_in_ActiveSet_Numerator 4834
ER_Percentage_UEs_with_2RL_in_ActiveSet_Denominator 4835
ER_Percentage_UEs_with_2RL_in_ActiveSet_Numerator 4835
ER_Percentage_UEs_with_3RL_in_ActiveSet_Denominator 4835
ER_Percentage_UEs_with_3RL_in_ActiveSet_Numerator1 4835
ER_Percentage_UEs_with_3RL_in_ActiveSet_Numerator2 4836
ER_Percentage_UEs_with_4RL_in_ActiveSet_Denominator 4836
ER_Percentage_UEs_with_4RL_in_ActiveSet_Numerator1 4836
ER_Percentage_UEs_with_4RL_in_ActiveSet_Numerator2 4837
fach1RateMatchingAttrDl 4837
fach2RateMatchingAttrDl 4837
fachMeasOccaCycLenCoeff 4837
fPwrDown 4838
fPwrUp 4838
hardIfhoCorr 4838
hoType 4838
hsdpaUsersAdm 4839
hsMeasurementPowerOffset 4839
hsPathlossThreshold 4839
iFCong 4839
iFHyst 4840
iFOffset 4840
individualOffset 4840
initialAckNackRepetitionFactor 4840
initialCqiRepetitionFactor 4841
intCongFilter 4841
interFreqFddMeasIndicator 4841
interPwrMax 4841
interRate 4842
lac 4842
loadSharingGsmFraction 4842
loadSharingGsmThreshold 4842
loadSharingMargin 4843
localCellId 4843
maxFach1Power 4843
maxFach2Power 4844
maximumTransmissionPower 4844
maxPwrMax 4844

© Copyright IBM Corp. 2008, 2009. All Rights Reserved.

maxRate 4844
maxTxPowerUl 4845
minimumRate 4845
minPwrMax 4845
minPwrRl 4845
nInSyncInd 4846
NodeB_RELEASE 4846
nOutSyncInd 4846
numHsPdschCodes 4846
operationalState 4847
operationalState_CM 4847
operationalState_CM_HSDPA 4847
operationalState_CM_PCH 4847
pchPower 4848
PERLENSEC 4848
PERLENSEC_K 4848
pichMode 4849
pichPower 4849
pmAttNonBlindInterFreqHoCsConversational_RUP 4849
pmAttNonBlindInterFreqHoCsSpeech12_RUP 4849
pmAttNonBlindInterFreqHoPsInteractiveGreater64_RUP 4850
pmAttNonBlindInterFreqHoPsInteractiveLess64_RUP 4850
pmAttNonBlindInterFreqHoStreamingOther_RUP 4850
pmBmcTrafficVolume 4851
pmCellDowntimeAuto 4851
pmCellDowntimeMan 4851
pmChSwitchAttemptFachUra 4852
pmChSwitchAttemptUraFach 4852
pmChSwitchDch128Fach 4852
pmChSwitchDch384Fach 4853
pmChSwitchDch64Fach 4853
pmChSwitchFachDch 4853
pmChSwitchFachIdle 4854
pmChSwitchP128P384 4854
pmChSwitchP128P64 4854
pmChSwitchP384P128 4855
pmChSwitchP64P128 4855
pmChSwitchSp0Sp64 4855
pmChSwitchSp64Sp0 4856
pmChSwitchSuccFachUra 4856
pmChSwitchSuccUraFach 4856
pmCmAttDlHls 4857
pmCmAttDlSf2 4857
pmCmAttUlHls 4857
pmCmAttUlSf2 4858
pmCmStop 4858
pmCmSuccDlHls 4858
pmCmSuccDlSf2 4859
pmCmSuccUlHls 4859
pmCmSuccUlSf2 4859
pmCnRabReleaseCs64 4860

Updated: 2009-07-22

pmCnRabReleaseCsSpeech 4860
pmCnRabReleaseHs 4860
pmCnRabReleasePacket 4861
pmDchDlRlcUserPacketThp_00 4861
pmDchDlRlcUserPacketThp_01 4861
pmDchDlRlcUserPacketThp_02 4862
pmDchDlRlcUserPacketThp_03 4862
pmDchDlRlcUserPacketThp_04 4862
pmDchDlRlcUserPacketThp_05 4862
pmDchDlRlcUserPacketThp_06 4863
pmDchDlRlcUserPacketThp_07 4863
pmDchDlRlcUserPacketThp_08 4863
pmDchDlRlcUserPacketThp_09 4864
pmDchDlRlcUserPacketThp_10 4864
pmDchDlRlcUserPacketThp_11 4864
pmDchDlRlcUserPacketThp_12 4865
pmDchDlRlcUserPacketThp_13 4865
pmDchDlRlcUserPacketThp_14 4865
pmDchDlRlcUserPacketThp_15 4866
pmDchDlRlcUserPacketThp_16 4866
pmDchDlRlcUserPacketThp_17 4866
pmDchDlRlcUserPacketThp_18 4866
pmDchDlRlcUserPacketThp_19 4867
pmDchUlRlcUserPacketThp_00 4867
pmDchUlRlcUserPacketThp_01 4867
pmDchUlRlcUserPacketThp_02 4868
pmDchUlRlcUserPacketThp_03 4868
pmDchUlRlcUserPacketThp_04 4868
pmDchUlRlcUserPacketThp_05 4869
pmDchUlRlcUserPacketThp_06 4869
pmDchUlRlcUserPacketThp_07 4869
pmDchUlRlcUserPacketThp_08 4870
pmDchUlRlcUserPacketThp_09 4870
pmDchUlRlcUserPacketThp_10 4870
pmDchUlRlcUserPacketThp_11 4870
pmDchUlRlcUserPacketThp_12 4871
pmDchUlRlcUserPacketThp_13 4871
pmDchUlRlcUserPacketThp_14 4871
pmDchUlRlcUserPacketThp_15 4872
pmDchUlRlcUserPacketThp_16 4872
pmDchUlRlcUserPacketThp_17 4872
pmDchUlRlcUserPacketThp_18 4873
pmDchUlRlcUserPacketThp_19 4873
pmDiscRcLost 4873
pmDiscRelocOpt 4874
pmDiscRelocSucc 4874
pmDiscSigResFail 4874
pmDiscTRelocOverall 4875
pmDiscUeInit 4875
pmDiscUnspecified 4875
pmDiscUtran 4876

© Copyright IBM Corp. 2008, 2009. All Rights Reserved.

pmDlRlcUserPacketThp_0_5 4876
pmDlRlcUserPacketThp_100_120 4876
pmDlRlcUserPacketThp_1000_1250 4877
pmDlRlcUserPacketThp_120_140 4877
pmDlRlcUserPacketThp_1250_1500 4877
pmDlRlcUserPacketThp_140_160 4877
pmDlRlcUserPacketThp_1500_1750 4878
pmDlRlcUserPacketThp_160_180 4878
pmDlRlcUserPacketThp_1750_2000 4878
pmDlRlcUserPacketThp_180_200 4878
pmDlRlcUserPacketThp_20_40 4879
pmDlRlcUserPacketThp_200_220 4879
pmDlRlcUserPacketThp_2000_2500 4879
pmDlRlcUserPacketThp_220_240 4880
pmDlRlcUserPacketThp_240_260 4880
pmDlRlcUserPacketThp_2500_3000 4880
pmDlRlcUserPacketThp_260_280 4880
pmDlRlcUserPacketThp_280_300 4881
pmDlRlcUserPacketThp_300_320 4881
pmDlRlcUserPacketThp_3000_4000 4881
pmDlRlcUserPacketThp_320_340 4882
pmDlRlcUserPacketThp_340_360 4882
pmDlRlcUserPacketThp_360_380 4882
pmDlRlcUserPacketThp_380_400 4882
pmDlRlcUserPacketThp_40_60 4883
pmDlRlcUserPacketThp_400_500 4883
pmDlRlcUserPacketThp_4000_5000 4883
pmDlRlcUserPacketThp_5_20 4883
pmDlRlcUserPacketThp_500_600 4884
pmDlRlcUserPacketThp_5000_more 4884
pmDlRlcUserPacketThp_60_80 4884
pmDlRlcUserPacketThp_600_700 4885
pmDlRlcUserPacketThp_700_800 4885
pmDlRlcUserPacketThp_80_100 4885
pmDlRlcUserPacketThp_800_900 4885
pmDlRlcUserPacketThp_900_1000 4886
pmDlRlcUserPacketThpP5MD_35 4886
pmDlRlcUserPacketThpP5MD_36 4886
pmDlRlcUserPacketThpP5MD_37 4887
pmDlRlcUserPacketThpP5MD_38 4887
pmDlRlcUserPacketThpP5MD_39 4887
pmDlRlcUserPacketThpP5MD_40 4888
pmDlTrafficVolumeAmr4750 4888
pmDlTrafficVolumeAmr5900 4888
pmDlTrafficVolumeAmr7950 4889
pmDlTrafficVolumeAmrNbMm 4889
pmDlTrafficVolumeAmrWb 4889
pmDlTrafficVolumeCs12 4890
pmDlTrafficVolumeCs12Ps0 4890
pmDlTrafficVolumeCs12Ps64 4890
pmDlTrafficVolumeCs57 4891

pmDlTrafficVolumeCs64 4891
pmDlTrafficVolumeCs64Ps8 4891
pmDlTrafficVolumePs128 4892
pmDlTrafficVolumePs16 4892
pmDlTrafficVolumePs384 4892
pmDlTrafficVolumePs64 4893
pmDlTrafficVolumePs8 4893
pmDlTrafficVolumePsCommon 4893
pmDlTrafficVolumePsIntHs 4894
pmDlTrafficVolumePsStr128 4894
pmDlTrafficVolumePsStr128Ps8 4894
pmDlTrafficVolumePsStr16 4895
pmDlTrafficVolumePsStr64 4895
pmDlTrafficVolumePsStr64Ps8 4896
pmDlTrafficVolumePsStrHs 4896
pmDlTrafficVolumeSrb136 4896
pmDlTrafficVolumeSrb34 4897
pmDlUpswitchAttemptHigh 4897
pmDlUpswitchAttemptHs 4897
pmDlUpswitchAttemptLow 4898
pmDlUpswitchAttemptMedium 4898
pmDlUpswitchSuccessHigh 4898
pmDlUpswitchSuccessHs 4899
pmDlUpswitchSuccessLow 4899
pmDlUpswitchSuccessMedium 4899
pmDownSwitchAttempt 4900
pmDownSwitchSuccess 4900
pmEnableEulHhoAttempt 4900
pmEnableHsHhoAttempt 4901
pmEnableHsHhoSuccess 4901
pmEulDowntimeAuto 4901
pmEulDowntimeMan 4902
pmEulHarqTransmTti10Failure 4902
pmEulHarqTransmTti10PsInteractive_01 4902
pmEulHarqTransmTti10PsInteractive_02 4903
pmEulHarqTransmTti10PsInteractive_03 4903
pmEulHarqTransmTti10PsInteractive_04 4904
pmEulHarqTransmTti10PsRabs_00 4904
pmEulHarqTransmTti10PsRabs_01 4904
pmEulHarqTransmTti10PsRabs_02 4905
pmEulHarqTransmTti10PsRabs_03 4905
pmEulHarqTransmTti10Srb_01 4905
pmEulHarqTransmTti10Srb_02 4906
pmEulHarqTransmTti10Srb_03 4906
pmEulHarqTransmTti10Srb_04 4906
pmEulHarqTransmTti2Failure 4907
pmEulHarqTransmTti2PsRabs_1 4907
pmEulHarqTransmTti2PsRabs_2 4907
pmEulHarqTransmTti2PsRabs_3 4908
pmEulHarqTransmTti2PsRabs_4 4908
pmEulHarqTransmTti2Srb_1 4908

© Copyright IBM Corp. 2008, 2009. All Rights Reserved.

pmEulHarqTransmTti2Srb_2 4909
pmEulHarqTransmTti2Srb_3 4909
pmEulHarqTransmTti2Srb_4 4909
pmEulMacesPduTti10DelivPsInteractive 4910
pmEulMacesPduTti10DelivPsRabs 4910
pmEulMacesPduTti10DelivSrb 4910
pmEulMacesPduTti10UndelivPsInteractive 4911
pmEulMacesPduTti10UndelivSrb 4911
pmEulMacesPduTti10UndvPsRabs 4911
pmEulMacesPduTti2DelivPsRabs 4912
pmEulMacesPduTti2DelivSrb 4912
pmEulMacesPduTti2UndelivPsRabs 4912
pmEulMacesPduTti2UndelivSrb 4913
pmEulRlcUserPacketThp_00 4913
pmEulRlcUserPacketThp_01 4913
pmEulRlcUserPacketThp_02 4914
pmEulRlcUserPacketThp_03 4914
pmEulRlcUserPacketThp_04 4914
pmEulRlcUserPacketThp_05 4915
pmEulRlcUserPacketThp_06 4915
pmEulRlcUserPacketThp_07 4915
pmEulRlcUserPacketThp_08 4916
pmEulRlcUserPacketThp_09 4916
pmEulRlcUserPacketThp_10 4916
pmEulRlcUserPacketThp_11 4917
pmEulRlcUserPacketThp_12 4917
pmEulRlcUserPacketThp_13 4917
pmEulRlcUserPacketThp_14 4918
pmEulRlcUserPacketThp_15 4918
pmEulRlcUserPacketThp_16 4918
pmEulRlcUserPacketThp_17 4919
pmEulRlcUserPacketThp_18 4919
pmEulToDchAttempt 4919
pmEulToDchSuccess 4920
pmFailedChSwitch 4920
pmFailedDchChSwitch 4920
pmFaultyTransportBlocksBcUl 4921
pmHsDlRlcUserPacketThp_00 4921
pmHsDlRlcUserPacketThp_01 4921
pmHsDlRlcUserPacketThp_02 4922
pmHsDlRlcUserPacketThp_03 4922
pmHsDlRlcUserPacketThp_04 4922
pmHsDlRlcUserPacketThp_05 4923
pmHsDlRlcUserPacketThp_06 4923
pmHsDlRlcUserPacketThp_07 4923
pmHsDlRlcUserPacketThp_08 4924
pmHsDlRlcUserPacketThp_09 4924
pmHsDlRlcUserPacketThp_10 4924
pmHsDlRlcUserPacketThp_11 4925
pmHsDlRlcUserPacketThp_12 4925
pmHsDlRlcUserPacketThp_13 4925

pmHsDlRlcUserPacketThp_14 4926
pmHsDlRlcUserPacketThp_15 4926
pmHsDlRlcUserPacketThp_16 4926
pmHsDlRlcUserPacketThp_17 4927
pmHsDlRlcUserPacketThp_18 4927
pmHsDlRlcUserPacketThp_19 4927
pmHsDlRlcUserPacketThp_20 4928
pmHsDlRlcUserPacketThp_21 4928
pmHsDlRlcUserPacketThp_22 4928
pmHsDlRlcUserPacketThp_23 4929
pmHsDlRlcUserPacketThp_24 4929
pmHsDlRlcUserPacketThp_25 4929
pmHsDlRlcUserPacketThp_26 4930
pmHsDlRlcUserPacketThp_27 4930
pmHsDlRlcUserPacketThp_28 4930
pmHsDlRlcUserPacketThp_29 4931
pmHsDowntimeAuto 4931
pmHsDowntimeMan 4931
pmHsdschOverloadDetection 4932
pmHsToDchAttempt 4932
pmHsToDchSuccess 4932
pmInactivityHsIdle 4933
pmInactivityMultiPsInt 4933
pmInactivityPsStreamIdle 4933
pmInterFreqMeasCmStart 4934
pmInterFreqMeasCmStop 4934
pmInterFreqMeasNoCmStart 4934
pmInterFreqMeasNoCmStop 4935
pmIratHoGsmMeasCmStart 4935
pmIratHoGsmMeasNoCmStart 4935
pmNoAttOutIratHoCs57_RUP 4936
pmNoAttOutIratHoMulti_RUP 4936
pmNoAttOutIratHoSpeech_RUP 4936
pmNoAttOutIratHoStandalone_RUP 4937
pmNoAttOutSbHoSpeech_RUP 4937
pmNoCellDchDisconnectAbnorm 4937
pmNoCellDchDisconnectNormal 4938
pmNoCellFachDisconnectAbnorm 4938
pmNoCellFachDisconnectNormal 4938
pmNoCellUpdAttempt 4938
pmNoCellUpdSuccess 4939
pmNoCs64DchDiscAbnorm 4939
pmNoCs64DchDiscNormal 4939
pmNoCsStreamDchDiscAbnorm 4940
pmNoCsStreamDchDiscNormal 4940
pmNoDirRetryAtt 4940
pmNoDirRetrySuccess 4941
pmNoDiscardedBmcCbsMsgs 4941
pmNoDiscardedCbsMsgOrders 4941
pmNoDiscardSduDtchHs 4942
pmNoDiscardSduDtchHsPsStream 4942

© Copyright IBM Corp. 2008, 2009. All Rights Reserved.

pmNoDlChCodeAllocAltCodeCm 4942
pmNoDlChCodeAllocAttemptCm 4943
pmNoDlChCodeAllocAttemptSf128 4943
pmNoDlChCodeAllocAttemptSf16 4943
pmNoDlChCodeAllocAttemptSf256 4944
pmNoDlChCodeAllocAttemptSf32 4944
pmNoDlChCodeAllocAttemptSf64 4944
pmNoDlChCodeAllocAttemptSf8 4945
pmNoDlChCodeAllocFailureSf128 4945
pmNoDlChCodeAllocFailureSf16 4945
pmNoDlChCodeAllocFailureSf256 4946
pmNoDlChCodeAllocFailureSf32 4946
pmNoDlChCodeAllocFailureSf64 4946
pmNoDlChCodeAllocFailureSf8 4947
pmNoDscSduDtchDlPsStream 4947
pmNoEulCcAttempt 4947
pmNoEulCcSuccess 4948
pmNoEulHardHoReturnOldChSource 4948
pmNoEulHardHoReturnOldChTarget 4948
pmNoFailedAfterAdm 4949
pmNoFailedRabEstAttemptExceedConnLimit 4949
pmNoFailedRabEstAttemptLackDlAse 4949
pmNoFailedRabEstAttemptLackDlChnlCode 4950
pmNoFailedRabEstAttemptLackDlHw 4950
pmNoFailedRabEstAttemptLackDlHwBest 4950
pmNoFailedRabEstAttemptLackDlPwr 4951
pmNoFailedRabEstAttemptLackUlAse 4951
pmNoFailedRabEstAttemptLackUlHw 4951
pmNoFailedRabEstAttemptLackUlHwBest 4952
pmNoFailedRrcConnectReqCsHw 4952
pmNoFailedRrcConnectReqHw 4952
pmNoFailedRrcConnectReqPsHw 4953
pmNoFailOutIratHoCs57GsmFailure_RUP 4953
pmNoFailOutIratHoCs57ReturnOldChNotPhyChFail_RUP 4953
pmNoFailOutIratHoCs57ReturnOldChPhyChFail_RUP 4954
pmNoFailOutIratHoCs57UeRejection_RUP 4954
pmNoFailOutIratHoMultiGsmFailure_RUP 4954
pmNoFailOutIratHoMultiReturnOldChNotPhyChFail_RUP 4955
pmNoFailOutIratHoMultiReturnOldChPhyChFail_RUP 4955
pmNoFailOutIratHoMultiUeRejection_RUP 4955
pmNoFailOutIratHoSpeechGsmFailure_RUP 4956
pmNoFailOutIratHoSpeechReturnOldChNotPhyChFail_RUP 4956
pmNoFailOutIratHoSpeechReturnOldChPhyChFail_RUP 4956
pmNoFailOutIratHoSpeechUeRejection_RUP 4957
pmNoFailOutIratHoStandaloneGsmFailure_RUP 4957
pmNoFailOutIratHoStandaloneReturnOldChNotPhyChFail_RUP 4958
pmNoFailOutIratHoStandaloneUeRejection_RUP 4958
pmNoFailOutSbHoSpeechGsmFailure_RUP 4958
pmNoFailOutSbHoSpeechReturnOldChNotPhyChFail_RUP 4959
pmNoFailOutSbHoSpeechReturnOldChPhyChFail_RUP 4959
pmNoFailOutSbHoSpeechUeRejection_RUP 4959

pmNoHsCcAttempt 4960
pmNoHsCcSuccess 4960
pmNoHsHardHoReturnOldChSource 4960
pmNoHsHardHoReturnOldChTarget 4961
pmNoIncomingEulHardHoAttempt 4961
pmNoIncomingEulHardHoSuccess 4961
pmNoIncomingHsHardHoAttempt 4962
pmNoIncomingHsHardHoSuccess 4962
pmNoIncomingPsStrHsHhoAtt 4962
pmNoIncomingPsStrHsHhoSucc 4963
pmNoInCsIratHoAdmFail 4963
pmNoInCsIratHoAtt 4963
pmNoInCsIratHoSuccess 4964
pmNoLoadSharingRrcConn 4964
pmNoLoadSharingRrcConnCs 4964
pmNoLoadSharingRrcConnPs 4965
pmNoNonServingCellReqDeniedEul 4965
pmNoNormalNasSignReleaseCs 4965
pmNoNormalNasSignReleasePs 4966
pmNoNormalRabReleaseAmrNb 4966
pmNoNormalRabReleaseAmrWb 4966
pmNoNormalRabReleaseCs64 4967
pmNoNormalRabReleaseCsStream 4967
pmNoNormalRabReleasePacket 4967
pmNoNormalRabReleasePacketStream 4967
pmNoNormalRabReleasePacketStream128 4967
pmNoNormalRabReleasePacketUra 4968
pmNoNormalRabReleasePsStreamHs 4968
pmNoNormalRabReleaseSpeech 4968
pmNoNormalRbReleaseEul 4969
pmNoNormalRbReleaseHs 4969
pmNoNormalReleaseSrbOnly136 4969
pmNoNormalReleaseSrbOnly34 4970
pmNoOfIurSwDownNgCong 4970
pmNoOfIurTermCsCong 4970
pmNoOfIurTermHsCong 4971
pmNoOfIurTermSpeechCong 4971
pmNoOfNonHoReqDeniedCs 4971
pmNoOfNonHoReqDeniedEul 4971
pmNoOfNonHoReqDeniedHs 4972
pmNoOfNonHoReqDeniedInteractive 4972
pmNoOfNonHoReqDeniedPsStr128 4972
pmNoOfNonHoReqDeniedPsStreaming 4972
pmNoOfNonHoReqDeniedSpeech 4972
pmNoOfReturningEmergencyCalls 4973
pmNoOfReturningRrcConn 4973
pmNoOfRlForDriftingUes 4973
pmNoOfRlForNonDriftingUes 4974
pmNoOfSampAseDl 4974
pmNoOfSampAseUl 4974
pmNoOfSwDownEulCong 4975

© Copyright IBM Corp. 2008, 2009. All Rights Reserved.

pmNoOfSwDownHsCong 4975
pmNoOfSwDownNgAdm 4975
pmNoOfSwDownNgCong 4976
pmNoOfSwDownNgHo 4976
pmNoOfTermCsCong 4976
pmNoOfTermHsCong 4977
pmNoOfTermSpeechCong 4977
pmNoOutgoingEulHardHoAttempt 4977
pmNoOutgoingEulHardHoSuccess 4978
pmNoOutgoingHsHardHoAttempt 4978
pmNoOutgoingHsHardHoSuccess 4978
pmNoOutgPsStreHsHhoAtt 4979
pmNoOutgPsStrHsHhoSucc 4979
pmNoOutIratCcAtt_RUP 4979
pmNoOutIratCcReturnOldCh_RUP 4980
pmNoOutIratCcSuccess_RUP 4980
pmNoPacketDchDiscAbnorm 4980
pmNoPacketDchDiscNormal 4981
pmNoPagingAttemptCnInitDcch 4981
pmNoPagingAttemptUtranRejected 4981
pmNoPagingType1Attempt 4981
pmNoPagingType1AttemptCs 4982
pmNoPagingType1AttemptPs 4982
pmNoPsStream128Ps8DchDiscAbnorm 4982
pmNoPsStream128Ps8DchDiscNormal 4983
pmNoPsStream64Ps8DchDiscAbnorm 4983
pmNoPsStream64Ps8DchDiscNormal 4983
pmNoPsStreamHsCcAttempt 4984
pmNoPsStreamHsCcSuccess 4984
pmNoPsStrHsHhoRtnOldSource 4984
pmNoPsStrHsHhoRtnOldTarget 4985
pmNoRabEstablishAttemptAmrNb 4985
pmNoRabEstablishAttemptAmrWb 4985
pmNoRabEstablishAttemptCs57 4986
pmNoRabEstablishAttemptCs64 4986
pmNoRabEstablishAttemptPacketInteractive 4986
pmNoRabEstablishAttemptPacketInteractiveHs 4986
pmNoRabEstablishAttemptPacketStream 4987
pmNoRabEstablishAttemptPacketStream128 4987
pmNoRabEstablishAttemptSpeech 4987
pmNoRabEstablishSuccessAmrNb 4987
pmNoRabEstablishSuccessAmrWb 4988
pmNoRabEstablishSuccessCs57 4988
pmNoRabEstablishSuccessCs64 4988
pmNoRabEstablishSuccessPacketInteractive 4988
pmNoRabEstablishSuccessPacketInteractiveHs 4989
pmNoRabEstablishSuccessPacketStream 4989
pmNoRabEstablishSuccessPacketStream128 4989
pmNoRabEstablishSuccessSpeech 4989
pmNoRabEstAttemptPsIntNonHs 4990
pmNoRabEstAttemptPsStreamHs 4990

Updated: 2009-07-22

pmNoRabEstAttPacketInteractiveEul 4990
pmNoRabEstBkRnBtPsStrHs 4991
pmNoRabEstBlkNPsIntNonHsBt 4991
pmNoRabEstBlkNPsStrNonHsBt 4991
pmNoRabEstBlkTnPsIntHsBt 4992
pmNoRabEstBlkTnPsStrHsBt 4992
pmNoRabEstBlkTnPsStrNonHsBt 4992
pmNoRabEstBlockNodeCs57Best 4993
pmNoRabEstBlockNodeCs64Best 4993
pmNoRabEstBlockNodePsIntHsBest 4993
pmNoRabEstBlockNodePsStrHsBest 4994
pmNoRabEstBlockNodeSpeechBest 4994
pmNoRabEstBlockRnPsStreamHs 4994
pmNoRabEstBlockTnCs57 4995
pmNoRabEstBlockTnCs57Best 4995
pmNoRabEstBlockTnCs64 4995
pmNoRabEstBlockTnCs64Best 4996
pmNoRabEstBlockTnPsIntHs 4996
pmNoRabEstBlockTnPsIntNonHs 4996
pmNoRabEstBlockTnPsIntNonHsBest 4997
pmNoRabEstBlockTnPsStrHs 4997
pmNoRabEstBlockTnPsStrNonHs 4997
pmNoRabEstBlockTnSpeech 4998
pmNoRabEstBlockTnSpeechBest 4998
pmNoRabEstSuccessPsIntNonHs 4998
pmNoRabEstSuccessPsStreamHs 4999
pmNoRabEstSuccPacketInteractiveEul 4999
pmNoReceivedSduDtchHs 4999
pmNoReceivedSduDtchHsPsStream 5000
pmNoRejRrcConnMpLoadC 5000
pmNoReqDeniedAdm 5000
pmNoRlDeniedAdm 5001
pmNoRrcConnReqBlockNodeCs 5001
pmNoRrcConnReqBlockNodePs 5001
pmNoRrcConnReqBlockTnCs 5002
pmNoRrcConnReqBlockTnCsBest 5002
pmNoRrcConnReqBlockTnPs 5002
pmNoRrcConnReqBlockTnPsBest 5003
pmNoRrcCsReqDeniedAdm 5003
pmNoRrcPsReqDeniedAdm 5003
pmNoRrcReqDeniedAdm 5004
pmNoRrcReqDeniedAdmDlChnlCode 5004
pmNoRrcReqDeniedAdmDlHw 5004
pmNoRrcReqDeniedAdmDlPwr 5005
pmNoRrcReqDeniedAdmUlHw 5005
pmNoRxSduDtchDlPsStr 5005
pmNoRxSduDtchUlPsStre 5006
pmNoServingCellReqDeniedEul 5006
pmNoSpeechDchDiscAbnorm 5006
pmNoSpeechDchDiscNormal 5007
pmNoSrvCellReqDeniedEulTti2 5007

© Copyright IBM Corp. 2008, 2009. All Rights Reserved.

pmNoSuccessOutIratHoCs57_RUP 5007
pmNoSuccessOutIratHoMulti_RUP 5008
pmNoSuccessOutIratHoSpeech_RUP 5008
pmNoSuccessOutIratHoStandalone_RUP 5008
pmNoSuccessOutSbHoSpeech_RUP 5009
pmNoSuccRbReconfOrigPsIntDch 5009
pmNoSuccRbReconfOrigPsIntEul 5009
pmNoSuccRbReconfOrigPsIntHs 5010
pmNoSuccRbReconfPsIntDch 5010
pmNoSuccRbReconfPsIntEul 5010
pmNoSuccRbReconfPsIntHs 5011
pmNoSysRelSpeechNeighbr 5011
pmNoSysRelSpeechSoHo 5012
pmNoSysRelSpeechULSynch 5012
pmNoSystemNasSignReleaseCs 5012
pmNoSystemNasSignReleasePs 5013
pmNoSystemRabReleaseAmrNb 5013
pmNoSystemRabReleaseAmrWb 5013
pmNoSystemRabReleaseCs64 5014
pmNoSystemRabReleaseCsStream 5014
pmNoSystemRabReleasePacket 5014
pmNoSystemRabReleasePacketStream 5014
pmNoSystemRabReleasePacketStream128 5014
pmNoSystemRabReleasePacketUra 5014
pmNoSystemRabReleasePsStreamHs 5015
pmNoSystemRabReleaseSpeech 5015
pmNoSystemRbReleaseEul 5015
pmNoSystemRbReleaseHs 5016
pmNoSystemReleaseSrbOnly136 5016
pmNoSystemReleaseSrbOnly34 5016
pmNoTimesCellFailAddToActSet 5017
pmNoTimesIfhoCellFailAddToActSet 5017
pmNoTimesIfhoRlAddToActSet 5017
pmNoTimesRlAddToActSet 5018
pmNoTimesRlDelFrActSet 5018
pmNoTimesRlRepInActSet 5018
pmNoTpSwitchSp64Speech 5019
pmNoUraUpdAttempt 5019
pmNoUraUpdSuccess 5019
pmPhyChnlReconfigAttempt 5020
pmPhyChnlReconfigSuccess 5020
pmPsIntDchToFachAtt 5020
pmPsIntDchToFachSucc 5021
pmPsIntHsToFachAtt 5021
pmPsIntHsToFachSucc 5021
pmPsStreamHsToDchAttempt 5022
pmPsStreamHsToDchSuccess 5022
pmRabEstablishAttemptBackground 5022
pmRabEstablishAttemptConvers 5023
pmRabEstablishAttemptInteractive 5023
pmRabEstablishAttemptStream 5023

Updated: 2009-07-22

pmRabEstablishEcAttempt 5024
pmRabEstablishEcSuccess 5024
pmRabEstablishSuccessBackground 5024
pmRabEstablishSuccessConvers 5025
pmRabEstablishSuccessInteractive 5025
pmRabEstablishSuccessStream 5025
pmRabEstFailDirRetry 5026
pmRabEstFailGuarBitRateUlUnavail 5026
pmRabEstFailInvalidRabId 5026
pmRabEstFailInvalidRabParamComb 5027
pmRabEstFailInvalidRabParamValue 5027
pmRabEstFailIuUPFail 5027
pmRabEstFailMaxBitRateDlUnavail 5028
pmRabEstFailMaxBitRateUlUnavail 5028
pmRabEstFailNoResource 5028
pmRabEstFailTrafficClassUnavail 5029
pmRabEstFailTransferDelay 5029
pmRabEstFailUPNoSupport 5029
pmRabEstFailVioGuarBitRate 5030
pmRabEstFailVioSduParam 5030
pmRabEstFailVioTrafficHandlingPrio 5030
pmRabReleasePsBackground 5031
pmRabReleasePsInteractive 5031
pmRadioBearerEstablishAttempt 5031
pmRadioBearerEstablishSuccess 5032
pmRadioBearerReconfigAttempt 5032
pmRadioBearerReconfigSuccess 5032
pmRanapDiscNormal 5033
pmRes1_0 5033
pmRes1_1 5033
pmRes1_10 5034
pmRes1_11 5034
pmRes1_12 5034
pmRes1_13 5035
pmRes1_14 5035
pmRes1_15 5035
pmRes1_16 5036
pmRes1_17 5036
pmRes1_18 5036
pmRes1_2 5037
pmRes1_3 5037
pmRes1_4 5037
pmRes1_5 5037
pmRes1_6 5038
pmRes1_7 5038
pmRes1_8 5038
pmRes1_9 5039
pmRes10_0 5039
pmRes10_1 5039
pmRes10_10 5040
pmRes10_11 5040

© Copyright IBM Corp. 2008, 2009. All Rights Reserved.

pmRes10_12 5040
pmRes10_13 5041
pmRes10_14 5041
pmRes10_15 5041
pmRes10_16 5042
pmRes10_17 5042
pmRes10_18 5042
pmRes10_2 5042
pmRes10_3 5043
pmRes10_4 5043
pmRes10_5 5043
pmRes10_6 5044
pmRes10_7 5044
pmRes10_8 5044
pmRes10_9 5045
pmRes11_0 5045
pmRes11_1 5045
pmRes11_10 5046
pmRes11_11 5046
pmRes11_12 5046
pmRes11_13 5047
pmRes11_14 5047
pmRes11_15 5047
pmRes11_16 5047
pmRes11_17 5048
pmRes11_18 5048
pmRes11_2 5048
pmRes11_3 5049
pmRes11_4 5049
pmRes11_5 5049
pmRes11_6 5050
pmRes11_7 5050
pmRes11_8 5050
pmRes11_9 5051
pmRes12_0 5051
pmRes12_1 5051
pmRes12_10 5052
pmRes12_11 5052
pmRes12_12 5052
pmRes12_13 5052
pmRes12_14 5053
pmRes12_15 5053
pmRes12_16 5053
pmRes12_17 5054
pmRes12_18 5054
pmRes12_2 5054
pmRes12_3 5055
pmRes12_4 5055
pmRes12_5 5055
pmRes12_6 5056
pmRes12_7 5056

pmRes12_8 5056
pmRes12_9 5056
pmRes2_0 5057
pmRes2_1 5057
pmRes2_10 5057
pmRes2_11 5058
pmRes2_12 5058
pmRes2_13 5058
pmRes2_14 5059
pmRes2_15 5059
pmRes2_16 5059
pmRes2_17 5060
pmRes2_18 5060
pmRes2_2 5060
pmRes2_3 5061
pmRes2_4 5061
pmRes2_5 5061
pmRes2_6 5061
pmRes2_7 5062
pmRes2_8 5062
pmRes2_9 5062
pmRes3_0 5063
pmRes3_1 5063
pmRes3_10 5063
pmRes3_11 5064
pmRes3_12 5064
pmRes3_13 5064
pmRes3_14 5065
pmRes3_15 5065
pmRes3_16 5065
pmRes3_17 5066
pmRes3_18 5066
pmRes3_2 5066
pmRes3_3 5066
pmRes3_4 5067
pmRes3_5 5067
pmRes3_6 5067
pmRes3_7 5068
pmRes3_8 5068
pmRes3_9 5068
pmRes4_0 5069
pmRes4_1 5069
pmRes4_10 5069
pmRes4_11 5070
pmRes4_12 5070
pmRes4_13 5070
pmRes4_14 5071
pmRes4_15 5071
pmRes4_16 5071
pmRes4_17 5071
pmRes4_18 5072

© Copyright IBM Corp. 2008, 2009. All Rights Reserved.

pmRes4_2 5072
pmRes4_3 5072
pmRes4_4 5073
pmRes4_5 5073
pmRes4_6 5073
pmRes4_7 5074
pmRes4_8 5074
pmRes4_9 5074
pmRes5_0 5075
pmRes5_1 5075
pmRes5_10 5075
pmRes5_11 5076
pmRes5_12 5076
pmRes5_13 5076
pmRes5_14 5076
pmRes5_15 5077
pmRes5_16 5077
pmRes5_17 5077
pmRes5_18 5078
pmRes5_2 5078
pmRes5_3 5078
pmRes5_4 5079
pmRes5_5 5079
pmRes5_6 5079
pmRes5_7 5080
pmRes5_8 5080
pmRes5_9 5080
pmRes6_0 5081
pmRes6_1 5081
pmRes6_10 5081
pmRes6_11 5082
pmRes6_12 5082
pmRes6_13 5082
pmRes6_14 5082
pmRes6_15 5083
pmRes6_16 5083
pmRes6_17 5083
pmRes6_18 5084
pmRes6_2 5084
pmRes6_3 5084
pmRes6_4 5085
pmRes6_5 5085
pmRes6_6 5085
pmRes6_7 5086
pmRes6_8 5086
pmRes6_9 5086
pmRes7_0 5087
pmRes7_1 5087
pmRes7_10 5087
pmRes7_11 5088
pmRes7_12 5088

Updated: 2009-07-22

pmRes7_13 5088
pmRes7_14 5088
pmRes7_15 5089
pmRes7_16 5089
pmRes7_17 5089
pmRes7_18 5090
pmRes7_2 5090
pmRes7_3 5090
pmRes7_4 5091
pmRes7_5 5091
pmRes7_6 5091
pmRes7_7 5092
pmRes7_8 5092
pmRes7_9 5092
pmRes8_0 5093
pmRes8_1 5093
pmRes8_10 5093
pmRes8_11 5094
pmRes8_12 5094
pmRes8_13 5094
pmRes8_14 5094
pmRes8_15 5095
pmRes8_16 5095
pmRes8_17 5095
pmRes8_18 5096
pmRes8_2 5096
pmRes8_3 5096
pmRes8_4 5097
pmRes8_5 5097
pmRes8_6 5097
pmRes8_7 5098
pmRes8_8 5098
pmRes8_9 5098
pmRes9_0 5099
pmRes9_1 5099
pmRes9_10 5099
pmRes9_11 5100
pmRes9_12 5100
pmRes9_13 5100
pmRes9_14 5100
pmRes9_15 5101
pmRes9_16 5101
pmRes9_17 5101
pmRes9_18 5102
pmRes9_2 5102
pmRes9_3 5102
pmRes9_4 5103
pmRes9_5 5103
pmRes9_6 5103
pmRes9_7 5104
pmRes9_8 5104

© Copyright IBM Corp. 2008, 2009. All Rights Reserved.

pmRes9_9 5104
pmRlAddAttemptsBestCellCsConvers 5105
pmRlAddAttemptsBestCellPacketHigh 5105
pmRlAddAttemptsBestCellPacketLow 5105
pmRlAddAttemptsBestCellSpeech 5105
pmRlAddAttemptsBestCellStandAlone 5106
pmRlAddAttemptsBestCellStream 5106
pmRlAddSuccessBestCellCsConvers 5106
pmRlAddSuccessBestCellPacketHigh 5106
pmRlAddSuccessBestCellPacketLow 5107
pmRlAddSuccessBestCellSpeech 5107
pmRlAddSuccessBestCellStandAlone 5107
pmRlAddSuccessBestCellStream 5108
pmRrcEstablishAttemptBackground 5108
pmRrcEstablishAttemptConvers 5108
pmRrcEstablishAttemptInteractive 5109
pmRrcEstablishAttemptStream 5109
pmRrcEstablishSuccessBackground 5109
pmRrcEstablishSuccessConvers 5110
pmRrcEstablishSuccessInteractive 5110
pmRrcEstablishSuccessStream 5110
pmSampBestAmrNbMmRabEst 5111
pmSamplesActDlRlcTotPacketThp 5111
pmSamplesActDlRlcUserPacketThp 5111
pmSamplesActiveUesBestCell 5112
pmSamplesActUlRlcTotPacketThp 5112
pmSamplesActUlRlcUserPacketThp 5112
pmSamplesAmr12200RabEstablish 5113
pmSamplesAmr4750RabEstablish 5113
pmSamplesAmr5900RabEstablish 5113
pmSamplesAmr7950RabEstablish 5114
pmSamplesAmrNbMmRabEstablish 5114
pmSamplesAmrWbRabEstablish 5114
pmSamplesBestAmr12200RabEstablish 5115
pmSamplesBestAmr4750RabEstablish 5115
pmSamplesBestAmr5900RabEstablish 5115
pmSamplesBestAmr7950RabEstablish 5116
pmSamplesBestAmrWbRabEstablish 5116
pmSamplesBestCs12Establish 5116
pmSamplesBestCs12PsIntRabEstablish 5117
pmSamplesBestCs57RabEstablish 5117
pmSamplesBestCs64PsIntRabEstablish 5117
pmSamplesBestCs64RabEstablish 5118
pmSamplesBestDchPsIntRabEstablish 5118
pmSamplesBestPsEulRabEstablish 5118
pmSamplesBestPsHsAdchRabEstablish 5119
pmSamplesBestPsStr128Ps8RabEstablish 5119
pmSamplesBestPsStr64Ps8RabEstablish 5119
pmSamplesBestPsStreamHsRabEst 5120
pmSamplesBestRrcOnlyEstablish 5120
pmSamplesBestSrbOnly34 5120

Updated: 2009-07-22

pmSamplesCompMode 5121
pmSamplesCs12Ps0RabEstablish 5121
pmSamplesCs12Ps64RabEstablish 5121
pmSamplesCs12RabEstablish 5122
pmSamplesCs57RabEstablish 5122
pmSamplesCs64Ps8RabEstablish 5122
pmSamplesCs64RabEstablish 5123
pmSamplesDchDlRlcTotPacketThp 5123
pmSamplesDchDlRlcUserPacketThp 5123
pmSamplesDchUlRlcTotPacketThp 5124
pmSamplesDchUlRlcUserPacketThp 5124
pmSamplesDlCode 5124
pmSamplesDlRlcUserThpCsConv 5125
pmSamplesDlRlcUserThpCsStream 5125
pmSamplesDlRlcUserThpPsStr128 5125
pmSamplesDlRlcUserThpPsStr64 5126
pmSamplesDlRlcUserThpPsStrHs 5126
pmSamplesDlRlcUserThpSpeech 5126
pmSamplesEulRlcTotPacketThp 5127
pmSamplesEulRlcUserPacketThp 5127
pmSamplesFachPsIntRabEstablish 5127
pmSamplesHsDlRlcTotPacketThp 5128
pmSamplesHsDlRlcUserPacketThp 5128
pmSamplesPacketDlDelay_0 5129
pmSamplesPacketDlDelay_1 5129
pmSamplesPacketDlDelay_2 5129
pmSamplesPacketLatency_0 5130
pmSamplesPacketLatency_1 5130
pmSamplesPacketLatency_2 5130
pmSamplesPktLatencyPsStrHs_0 5131
pmSamplesPktLatencyPsStrHs_1 5131
pmSamplesPktLatencyPsStrHs_2 5131
pmSamplesPs128RabEstablish 5132
pmSamplesPs384RabEstablish 5132
pmSamplesPs64RabEstablish 5132
pmSamplesPsEulRabEstablish 5133
pmSamplesPsHsAdchRabEstablish 5133
pmSamplesPsInteractive 5133
pmSamplesPsStr128Ps8RabEstablish 5134
pmSamplesPsStr64Ps8RabEstablish 5134
pmSamplesPsStreamHsRabEst 5134
pmSamplesRabFach 5135
pmSamplesRrcOnlyEstablish 5135
pmSamplesSf4Ul 5135
pmSamplesSrbOnly34 5136
pmSamplesUesWith1Rls1RlInActSet 5136
pmSamplesUesWith1Rls2RlInActSet 5136
pmSamplesUesWith1Rls3RlInActSet 5137
pmSamplesUesWith2Rls2RlInActSet 5137
pmSamplesUesWith2Rls3RlInActSet 5137
pmSamplesUesWith2Rls4RlInActSet 5137

© Copyright IBM Corp. 2008, 2009. All Rights Reserved.

pmSamplesUesWith3Rls3RlInActSet 5138
pmSamplesUesWith3Rls4RlInActSet 5138
pmSamplesUesWith4Rls4RlInActSet 5138
pmSamplesUlRlcUserThpCsConv 5139
pmSamplesUlRlcUserThpCsStream 5139
pmSamplesUlRlcUserThpPsStr128 5139
pmSamplesUlRlcUserThpPsStr16 5140
pmSamplesUlRlcUserThpPsStr32 5140
pmSamplesUlRlcUserThpSpeech 5140
pmSamplesUlRssi 5141
pmServiceDeniedCodeShortageCs57 5141
pmServiceDeniedCodeShortageCs64 5141
pmServiceDeniedCodeShortageCsSpeech 5142
pmServiceDeniedCodeShortageHs 5142
pmServiceDeniedCodeShortagePacket 5142
pmServiceDeniedCodeShortagePs64 5143
pmServiceDeniedDlPowerCs57 5143
pmServiceDeniedDlPowerCs64 5143
pmServiceDeniedDlPowerCsSpeech 5144
pmServiceDeniedDlPowerHs 5144
pmServiceDeniedDlPowerPacket 5144
pmServiceDeniedDlPowerPs64 5145
pmServiceDeniedOtherCs57 5145
pmServiceDeniedOtherCs64 5145
pmServiceDeniedOtherCsSpeech 5146
pmServiceDeniedOtherHs 5146
pmServiceDeniedOtherPacket 5146
pmServiceDeniedOtherPs64 5147
pmServiceDeniedUlIntCs57 5147
pmServiceDeniedUlIntCs64 5147
pmServiceDeniedUlIntCsSpeech 5148
pmServiceDeniedUlIntHs 5148
pmServiceDeniedUlIntPacket 5148
pmServiceDeniedUlIntPs64 5149
pmSmplActDriftUesBestCell 5149
pmSuccNonBlindInterFreqHoCsConversational_RUP 5149
pmSuccNonBlindInterFreqHoCsSpeech12_RUP 5150
pmSuccNonBlindInterFreqHoPsInteractiveGreater64_RUP 5150
pmSuccNonBlindInterFreqHoPsInteractiveLess64_RUP 5150
pmSuccNonBlindInterFreqHoStreamingOther_RUP 5151
pmSumActDlRlcTotPacketThp 5151
pmSumActDlRlcUserPacketThp 5152
pmSumActiveDriftUesBestCell 5152
pmSumActiveUesBestCell 5152
pmSumActUlRlcTotPacketThp 5153
pmSumActUlRlcUserPacketThp 5153
pmSumAmr12200RabEstablish 5153
pmSumAmr4750RabEstablish 5154
pmSumAmr5900RabEstablish 5154
pmSumAmr7950RabEstablish 5154
pmSumAmrNbMmRabEstablish 5155

Updated: 2009-07-22

pmSumAmrWbRabEstablish 5155
pmSumBestAmr12200RabEstablish 5155
pmSumBestAmr4750RabEstablish 5156
pmSumBestAmr5900RabEstablish 5156
pmSumBestAmr7950RabEstablish 5156
pmSumBestAmrNbMmRabEstablish 5157
pmSumBestAmrWbRabEstablish 5157
pmSumBestCs12Establish 5157
pmSumBestCs12PsIntRabEstablish 5158
pmSumBestCs57RabEstablish 5158
pmSumBestCs64PsIntRabEstablish 5158
pmSumBestCs64RabEstablish 5159
pmSumBestDchPsIntRabEstablish 5159
pmSumBestPsEulRabEstablish 5159
pmSumBestPsHsAdchRabEstablish 5160
pmSumBestPsStr128Ps8RabEstablish 5160
pmSumBestPsStr64Ps8RabEstablish 5160
pmSumBestPsStreamHsRabEst 5161
pmSumBestRrcOnlyEstablish 5161
pmSumBestSrbOnly34 5161
pmSumCompMode 5162
pmSumCs12Ps0RabEstablish 5162
pmSumCs12Ps64RabEstablish 5162
pmSumCs12RabEstablish 5163
pmSumCs57RabEstablish 5163
pmSumCs64Ps8RabEstablish 5163
pmSumCs64RabEstablish 5164
pmSumDchDlRlcTotPacketThp 5164
pmSumDchDlRlcUserPacketThp 5164
pmSumDchUlRlcTotPacketThp 5165
pmSumDchUlRlcUserPacketThp 5165
pmSumDlCode 5165
pmSumDlRlcUserThpCsConv 5166
pmSumDlRlcUserThpCsStream 5166
pmSumDlRlcUserThpPsStream128 5167
pmSumDlRlcUserThpPsStream64 5167
pmSumDlRlcUserThpPsStreamHs 5167
pmSumDlRlcUserThpSpeech 5168
pmSumEulRlcTotPacketThp 5168
pmSumEulRlcUserPacketThp 5168
pmSumFachPsIntRabEstablish 5169
pmSumHsDlRlcTotPacketThp 5169
pmSumHsDlRlcUserPacketThp 5170
pmSumOfSampAseDl 5170
pmSumOfSampAseUl 5170
pmSumOfTimesMeasOlDl 5170
pmSumOfTimesMeasOlUl 5171
pmSumPacketDlDelay_0 5171
pmSumPacketDlDelay_1 5171
pmSumPacketDlDelay_2 5172
pmSumPacketLatency_0 5172

© Copyright IBM Corp. 2008, 2009. All Rights Reserved.

pmSumPacketLatency_1 5172
pmSumPacketLatency_2 5173
pmSumPacketLatencyPsStreamHs_0 5173
pmSumPacketLatencyPsStreamHs_1 5173
pmSumPacketLatencyPsStreamHs_2 5174
pmSumPs128RabEstablish 5174
pmSumPs384RabEstablish 5174
pmSumPs64RabEstablish 5175
pmSumPsEulRabEstablish 5175
pmSumPsHsAdchRabEstablish 5175
pmSumPsInteractive 5176
pmSumPsStr128Ps8RabEstablish 5176
pmSumPsStr64Ps8RabEstablish 5176
pmSumPsStreamHsRabEst 5177
pmSumRabFach 5177
pmSumRrcOnlyEstablish 5177
pmSumSf4Ul 5178
pmSumSqrDlCode 5178
pmSumSqrUlRssi 5178
pmSumSrbOnly34 5179
pmSumUesWith1Rls1RlInActSet 5179
pmSumUesWith1Rls2RlInActSet 5179
pmSumUesWith1Rls3RlInActSet 5180
pmSumUesWith2Rls2RlInActSet 5180
pmSumUesWith2Rls3RlInActSet 5180
pmSumUesWith2Rls4RlInActSet 5181
pmSumUesWith3Rls3RlInActSet 5181
pmSumUesWith3Rls4RlInActSet 5181
pmSumUesWith4Rls4RlInActSet 5181
pmSumUlRlcUserThpCsConv 5182
pmSumUlRlcUserThpCsStream 5182
pmSumUlRlcUserThpPsStream128 5182
pmSumUlRlcUserThpPsStream16 5183
pmSumUlRlcUserThpPsStream32 5183
pmSumUlRlcUserThpSpeech 5184
pmSumUlRssi 5184
pmSystemRabReleaseIfhoCs 5184
pmSystemRabReleaseIfhoPs 5185
pmSystemRabReleaseIratCs 5185
pmSystemRabReleaseIratPs 5185
pmTotalTimeDlCellCong 5186
pmTotalTimeHsdschOverload 5186
pmTotalTimeUlCellCong 5186
pmTotNoRrcConnectAttIratCcOrder 5186
pmTotNoRrcConnectAttIratCellResel 5187
pmTotNoRrcConnectFailCongIratCcOrder 5187
pmTotNoRrcConnectFailCongIratCellResel 5187
pmTotNoRrcConnectReq 5188
pmTotNoRrcConnectReqCs 5188
pmTotNoRrcConnectReqCsSucc 5188
pmTotNoRrcConnectReqDetach 5189

Updated: 2009-07-22

pmTotNoRrcConnectReqEmergency 5189
pmTotNoRrcConnectReqOrigBackgrd 5189
pmTotNoRrcConnectReqOrigConv 5190
pmTotNoRrcConnectReqOrigHigh 5190
pmTotNoRrcConnectReqOrigInt 5190
pmTotNoRrcConnectReqOrigLow 5191
pmTotNoRrcConnectReqOrigStream 5191
pmTotNoRrcConnectReqOrigSub 5191
pmTotNoRrcConnectReqPs 5192
pmTotNoRrcConnectReqPsSucc 5192
pmTotNoRrcConnectReqReEst 5192
pmTotNoRrcConnectReqRegister 5193
pmTotNoRrcConnectReqSms 5193
pmTotNoRrcConnectReqSubTr 5193
pmTotNoRrcConnectReqSuccess 5194
pmTotNoRrcConnectReqTermBackgrd 5194
pmTotNoRrcConnectReqTermConv 5194
pmTotNoRrcConnectReqTermHigh 5195
pmTotNoRrcConnectReqTermInt 5195
pmTotNoRrcConnectReqTermLow 5195
pmTotNoRrcConnectReqTermStream 5196
pmTotNoRrcConnectReqTermUnknown 5196
pmTotNoRrcConnectSetup 5196
pmTotNoRrcConnectSuccDetach 5197
pmTotNoRrcConnectSuccEmergency 5197
pmTotNoRrcConnectSuccessIratCcOrder 5197
pmTotNoRrcConnectSuccessIratCellResel 5198
pmTotNoRrcConnectSuccOrigBackgrd 5198
pmTotNoRrcConnectSuccOrigConv 5198
pmTotNoRrcConnectSuccOrigHigh 5199
pmTotNoRrcConnectSuccOrigInt 5199
pmTotNoRrcConnectSuccOrigLow 5199
pmTotNoRrcConnectSuccOrigStream 5200
pmTotNoRrcConnectSuccOrigSub 5200
pmTotNoRrcConnectSuccReEst 5200
pmTotNoRrcConnectSuccRegister 5201
pmTotNoRrcConnectSuccTermBackgrd 5201
pmTotNoRrcConnectSuccTermConv 5201
pmTotNoRrcConnectSuccTermHigh 5202
pmTotNoRrcConnectSuccTermInt 5202
pmTotNoRrcConnectSuccTermLow 5203
pmTotNoRrcConnectSuccTermStream 5203
pmTotNoRrcConnectSuccTermUnknown 5203
pmTotNoRrcConnUeCap_00 5204
pmTotNoRrcConnUeCap_01 5204
pmTotNoRrcConnUeCap_02 5204
pmTotNoRrcConnUeCap_03 5205
pmTotNoRrcConnUeCap_04 5205
pmTotNoRrcConnUeCap_05 5205
pmTotNoRrcConnUeCap_06 5206
pmTotNoRrcConnUeCap_07 5206

© Copyright IBM Corp. 2008, 2009. All Rights Reserved.

pmTotNoRrcConnUeCap_08 5207
pmTotNoRrcConnUeCap_09 5207
pmTotNoRrcReq 5207
pmTotNoTermRrcConnectReq 5208
pmTotNoTermRrcConnectReqCs 5208
pmTotNoTermRrcConnectReqCsSucc 5208
pmTotNoTermRrcConnectReqPs 5208
pmTotNoTermRrcConnectReqPsSucc 5209
pmTotNoTermRrcConnectReqSucc 5209
pmTotNoUtranRejRrcConnReq 5209
pmTotRabEstSuccess 5210
pmTotServiceDeniedCs57 5210
pmTotServiceDeniedCs64 5210
pmTotServiceDeniedCsSpeech 5211
pmTotServiceDeniedHs 5211
pmTotServiceDeniedPacket 5211
pmTotServiceDeniedPs64 5212
pmTransportBlocksBcUl 5212
pmTrChnlReconfigAttempt 5212
pmTrChnlReconfigSuccess 5213
pmUlRlcUserPacketThp_0_5 5213
pmUlRlcUserPacketThp_100_120 5213
pmUlRlcUserPacketThp_120_140 5214
pmUlRlcUserPacketThp_140_160 5214
pmUlRlcUserPacketThp_160_180 5214
pmUlRlcUserPacketThp_180_200 5214
pmUlRlcUserPacketThp_20_40 5215
pmUlRlcUserPacketThp_200_220 5215
pmUlRlcUserPacketThp_220_240 5215
pmUlRlcUserPacketThp_240_260 5215
pmUlRlcUserPacketThp_260_280 5216
pmUlRlcUserPacketThp_280_300 5216
pmUlRlcUserPacketThp_300_320 5216
pmUlRlcUserPacketThp_320_340 5217
pmUlRlcUserPacketThp_340_360 5217
pmUlRlcUserPacketThp_360_more 5217
pmUlRlcUserPacketThp_40_60 5217
pmUlRlcUserPacketThp_5_20 5218
pmUlRlcUserPacketThp_60_80 5218
pmUlRlcUserPacketThp_80_100 5218
pmUlRlcUserPacketThpP5MD_19 5218
pmUlRlcUserPacketThpP5MD_20 5219
pmUlRlcUserPacketThpP5MD_21 5219
pmUlRlcUserPacketThpP5MD_22 5219
pmUlRlcUserPacketThpP5MD_23 5220
pmUlRlcUserPacketThpP5MD_24 5220
pmUlRlcUserPacketThpP5MD_25 5220
pmUlRlcUserPacketThpP5MD_26 5221
pmUlRlcUserPacketThpP5MD_27 5221
pmUlRlcUserPacketThpP5MD_28 5222
pmUlRlcUserPacketThpP5MD_29 5222

pmUlTrafficVolumeAmr4750 5222
pmUlTrafficVolumeAmr5900 5223
pmUlTrafficVolumeAmr7950 5223
pmUlTrafficVolumeAmrNbMm 5223
pmUlTrafficVolumeAmrWb 5224
pmUlTrafficVolumeCs12 5224
pmUlTrafficVolumeCs12Ps0 5224
pmUlTrafficVolumeCs12Ps64 5225
pmUlTrafficVolumeCs57 5225
pmUlTrafficVolumeCs64 5225
pmUlTrafficVolumeCs64Ps8 5226
pmUlTrafficVolumePs128 5226
pmUlTrafficVolumePs16 5226
pmUlTrafficVolumePs384 5227
pmUlTrafficVolumePs64 5227
pmUlTrafficVolumePs8 5227
pmUlTrafficVolumePsCommon 5228
pmUlTrafficVolumePsIntEul 5228
pmUlTrafficVolumePsStr128 5228
pmUlTrafficVolumePsStr128Ps8 5229
pmUlTrafficVolumePsStr16 5229
pmUlTrafficVolumePsStr32 5229
pmUlTrafficVolumePsStr64Ps8 5230
pmUlTrafficVolumeSrb136 5230
pmUlTrafficVolumeSrb34 5230
pmUlUpswitchAttemptEul 5231
pmUlUpswitchAttemptHigh 5231
pmUlUpswitchAttemptLow 5231
pmUlUpswitchAttemptMedium 5232
pmUlUpswitchSuccessEul 5232
pmUlUpswitchSuccessHigh 5232
pmUlUpswitchSuccessLow 5233
pmUlUpswitchSuccessMedium 5233
pmUpswitchFachHsAttempt 5233
pmUpswitchFachHsSuccess 5234
pmUtranRabReleaseDlIntCs64 5234
pmUtranRabReleaseDlIntCsSpeech 5234
pmUtranRabReleaseDlIntHs 5235
pmUtranRabReleaseDlIntPacket 5235
pmUtranRabReleaseOtherCs64 5235
pmUtranRabReleaseOtherCsSpeech 5235
pmUtranRabReleaseOtherHs 5236
pmUtranRabReleaseOtherPacket 5236
pmUtranRabReleaseRlFailCs64 5236
pmUtranRabReleaseRlFailCsSpeech 5237
pmUtranRabReleaseRlFailHs 5237
pmUtranRabReleaseRlFailPacket 5237
pmUtranRabReleaseUlIntCs64 5238
pmUtranRabReleaseUlIntCsSpeech 5238
pmUtranRabReleaseUlIntHs 5238
pmUtranRabReleaseUlIntPacket 5239

© Copyright IBM Corp. 2008, 2009. All Rights Reserved.

pOffset1Fach 5239
pOffset3Fach 5239
primaryCpichPower 5239
primarySchPower 5240
primaryScramblingCode 5240
pwrAdm 5240
pwrAdmOffset 5241
pwrCongFilter 5241
pwrEstFact 5241
pwrHyst 5241
pwrOffset 5242
qHyst1 5242
qHyst2 5242
qQualMin 5242
qRxLevMin 5243
qualMeasQuantity 5243
rac 5243
releaseAseDl 5243
releaseAseDlGhs 5244
releaseAseDlNg 5244
reservedBy 5244
reservedBy_CM 5245
rlFailureT 5245
routingAreaRef 5245
sac 5245
sccpchOffset 5246
sccpchOffset_CM_PCH 5246
secondarySchPower 5246
sf16Adm 5247
sf16AdmUl 5247
sf16gAdm 5247
sf32Adm 5247
sf4AdmUl 5248
sf4UlPathlossThreshold 5248
sf8Adm 5248
sf8AdmUl 5249
sHcsRat 5249
sib1PlmnScopeValueTag 5249
sInterSearch 5249
sIntraSearch 5250
snDirectedRetryTarget 5250
sRatSearch 5250
tCell 5250
tfsFlexConstant 5251
tmCongAction 5251
tmCongActionGhs 5251
tmCongActionNg 5251
tmInitialG 5252
tmInitialGhs 5252
treSelection 5252
txFilter 5253

Updated: 2009-07-22

txInterval 5253
uarfcnDl 5253
uarfcnUl 5253
ulPathlossCheckEnabled 5254
usageState 5254
usedFreqThresh2dEcno 5254
usedFreqThresh2dRscp 5254
userLabel 5255
userLabel_CM 5255
userLabel_CM_HSDSCH 5255
userLabel_CM_PCH 5256
utranCellIubLink 5256
utranCellPosition_PC1 5256
utranCellPosition_PC10 5257
utranCellPosition_PC11 5257
utranCellPosition_PC12 5257
utranCellPosition_PC13 5258
utranCellPosition_PC14 5258
utranCellPosition_PC15 5259
utranCellPosition_PC2 5259
utranCellPosition_PC3 5259
utranCellPosition_PC4 5260
utranCellPosition_PC5 5260
utranCellPosition_PC6 5261
utranCellPosition_PC7 5261
utranCellPosition_PC8 5261
utranCellPosition_PC9 5262
UtranRelation Primitive Calculations 5262
adjacentCell 5262
GRAPHmultiLineSeparator 5263
Inter_Frequency_Handover_Success_Rate_CS_non_speech 5263
Inter_Frequency_Handover_Success_Rate_Other_Services 5263
Inter_Frequency_Handover_Success_Rate_PS_Interactive_64OrLess 5263
Inter_Frequency_Handover_Success_Rate_PS_Interactive_Greater_64 5263
Inter_Frequency_HO_Success_Rate_Speech 5263
NUMDAYS 5264
NUMHOURS 5264
RlAddSuccBestCellSpeechRate 5264
UtranRelation Peg Counts 5264
cId 5264
individualOffset 5264
lac 5265
loadSharingCandidate 5265
maxTxPowerUl 5265
mcc 5266
mnc 5266
PERLENSEC 5266
PERLENSEC_K 5267
pmAttLoadBasedIfho 5267
pmAttNonBlindIfhoPsIntEul 5267
pmAttNonBlindIfhoPsIntHs 5268

© Copyright IBM Corp. 2008, 2009. All Rights Reserved.

pmAttNonBlindIfhoPsStrHs 5268
pmAttNonBlindInterFreqHoCsConversational 5268
pmAttNonBlindInterFreqHoCsSpeech12 5269
pmAttNonBlindInterFreqHoPsInteractiveGreater64 5269
pmAttNonBlindInterFreqHoPsInteractiveLess64 5269
pmAttNonBlindInterFreqHoStreamingOther 5270
pmFailLoadBasedIfhoFailRev 5270
pmFailLoadBasedIfhoRev 5270
pmFailNoBlindIfhoFRevPsIntEul 5271
pmFailNonBlindIfhoFRevPsIntHs 5271
pmFailNonBlindIfhoFRevPsStrHs 5272
pmFailNonBlindIfhoRevPsIntEul 5272
pmFailNonBlindIfhoRevPsIntHs 5272
pmFailNonBlindIfhoRevPsStrHs 5273
pmFailNonBlindInterFreqHoFailRevertCsConversational 5273
pmFailNonBlindInterFreqHoFailRevertCsSpeech12 5274
pmFailNonBlindInterFreqHoFailRevertPsInteractiveGreater64 5274
pmFailNonBlindInterFreqHoFailRevertPsInteractiveLess64 5274
pmFailNonBlindInterFreqHoFailRevertStreamingOther 5275
pmFailNonBlindInterFreqHoRevertCsConversational 5275
pmFailNonBlindInterFreqHoRevertCsSpeech12 5275
pmFailNonBlindInterFreqHoRevertPsInteractiveGreater64 5276
pmFailNonBlindInterFreqHoRevertPsInteractiveLess64 5276
pmFailNonBlindInterFreqHoRevertStreamingOther 5276
pmNoAttOutCnhhoCsNonSpeech 5277
pmNoAttOutCnhhoPsConnRelease 5277
pmNoAttOutCnhhoSpeech 5277
pmNoAttOutLoadBasedCnhho 5278
pmNoSuccOutCnhhoCsNonSpeech 5278
pmNoSuccOutCnhhoSpeech 5278
pmNoSuccOutLoadBasedCnhho 5279
pmRlAddAttemptsBestCellCsConvers 5279
pmRlAddAttemptsBestCellPacketHigh 5279
pmRlAddAttemptsBestCellPacketLow 5280
pmRlAddAttemptsBestCellSpeech 5280
pmRlAddAttemptsBestCellStandAlone 5280
pmRlAddAttemptsBestCellStream 5281
pmRlAddSuccessBestCellCsConvers 5281
pmRlAddSuccessBestCellPacketHigh 5281
pmRlAddSuccessBestCellPacketLow 5282
pmRlAddSuccessBestCellSpeech 5282
pmRlAddSuccessBestCellStandAlone 5282
pmRlAddSuccessBestCellStream 5283
pmSuccLoadBasedIfho 5283
pmSuccNonBlindIfhoPsIntEul 5283
pmSuccNonBlindIfhoPsIntHs 5284
pmSuccNonBlindIfhoPsStrHs 5284
pmSuccNonBlindInterFreqHoCsConversational 5285
pmSuccNonBlindInterFreqHoCsSpeech12 5285
pmSuccNonBlindInterFreqHoPsInteractiveGreater64 5285
pmSuccNonBlindInterFreqHoPsInteractiveLess64 5286

pmSuccNonBlindInterFreqHoStreamingOther 5286
primaryCpichPower 5286
primaryScramblingCode 5287
qOffset1sn 5287
qOffset2sn 5287
qQualMin 5288
qRxLevMin 5288
rac 5288
reservedBy 5289
rncId 5289
uarfcnDl 5289
uarfcnUl 5290
userLabel 5290
UtranRelationName 5290
Vc12Ttp_NodeB Primitive Calculations 5291
GRAPHmultiLineSeparator 5291
NUMDAYS 5291
NUMHOURS 5291
Vc12Ttp_NodeB Peg Counts 5291
NodeB_RELEASE 5291
PERLENSEC 5291
PERLENSEC_K 5292
pmVcBbe 5292
pmVcEs 5292
pmVcSes 5293
pmVcUas 5293
Vc12Ttp_RNC Primitive Calculations 5293
GRAPHmultiLineSeparator 5293
NUMDAYS 5294
NUMHOURS 5294
Vc12Ttp_RNC Peg Counts 5294
PERLENSEC 5294
PERLENSEC_K 5294
pmVcBbe 5294
pmVcEs 5295
pmVcSes 5295
pmVcUas 5295
RNC_RELEASE 5296
Vc4Ttp_NodeB Primitive Calculations 5296
GRAPHmultiLineSeparator 5296
NUMDAYS 5296
NUMHOURS 5296
Vc4Ttp_NodeB Peg Counts 5297
NodeB_RELEASE 5297
PERLENSEC 5297
PERLENSEC_K 5297
pmVcBbe 5298
pmVcEs 5298
pmVcSes 5298
pmVcUas 5299

© Copyright IBM Corp. 2008, 2009. All Rights Reserved.

Vc4Ttp_RNC Primitive Calculations 5299
GRAPHmultiLineSeparator 5299
NUMDAYS 5299
NUMHOURS 5299
Vc4Ttp_RNC Peg Counts 5299
PERLENSEC 5300
PERLENSEC_K 5300
pmVcBbe 5300
pmVcEs 5300
pmVcSes 5301
pmVcUas 5301
RNC_RELEASE 5301
VclTp_NodeB Primitive Calculations 5302
Avr_CellRate_Recieved_VclTp_NodeB 5302
Avr_CellRate_Transmitted_VclTp_NodeB 5302
GRAPHmultiLineSeparator 5302
NUMDAYS 5302
NUMHOURS 5302
VclTp_NodeB Peg Counts 5303
NodeB_RELEASE 5303
PERLENSEC 5303
PERLENSEC_K 5303
pmBwUtilizationRx_00 5304
pmBwUtilizationRx_01 5304
pmBwUtilizationRx_02 5304
pmBwUtilizationRx_03 5305
pmBwUtilizationRx_04 5305
pmBwUtilizationRx_05 5306
pmBwUtilizationRx_06 5306
pmBwUtilizationRx_07 5306
pmBwUtilizationRx_08 5307
pmBwUtilizationRx_09 5307
pmBwUtilizationRx_10 5308
pmBwUtilizationRx_11 5308
pmBwUtilizationRx_12 5308
pmBwUtilizationRx_13 5309
pmBwUtilizationRx_14 5309
pmBwUtilizationRx_15 5310
pmBwUtilizationRx_16 5310
pmBwUtilizationRx_17 5310
pmBwUtilizationRx_18 5311
pmBwUtilizationRx_19 5311
pmBwUtilizationRx_20 5312
pmBwUtilizationTx_00 5312
pmBwUtilizationTx_01 5312
pmBwUtilizationTx_02 5313
pmBwUtilizationTx_03 5313
pmBwUtilizationTx_04 5314
pmBwUtilizationTx_05 5314
pmBwUtilizationTx_06 5314

pmBwUtilizationTx_07 5315
pmBwUtilizationTx_08 5315
pmBwUtilizationTx_09 5316
pmBwUtilizationTx_10 5316
pmBwUtilizationTx_11 5316
pmBwUtilizationTx_12 5317
pmBwUtilizationTx_13 5317
pmBwUtilizationTx_14 5318
pmBwUtilizationTx_15 5318
pmBwUtilizationTx_16 5318
pmBwUtilizationTx_17 5319
pmBwUtilizationTx_18 5319
pmBwUtilizationTx_19 5320
pmBwUtilizationTx_20 5320
pmReceivedAtmCells 5320
pmTransmittedAtmCells 5321
VclTp_RNC Primitive Calculations 5321
Avr_CellRate_Recieved_VclTp_RNC 5321
Avr_CellRate_Transmitted_VclTp_RNC 5321
GRAPHmultiLineSeparator 5321
NUMDAYS 5321
NUMHOURS 5322
VclTp_RNC Peg Counts 5322
PERLENSEC 5322
PERLENSEC_K 5322
pmBwUtilizationRx_00 5323
pmBwUtilizationRx_01 5323
pmBwUtilizationRx_02 5323
pmBwUtilizationRx_03 5324
pmBwUtilizationRx_04 5324
pmBwUtilizationRx_05 5325
pmBwUtilizationRx_06 5325
pmBwUtilizationRx_07 5325
pmBwUtilizationRx_08 5326
pmBwUtilizationRx_09 5326
pmBwUtilizationRx_10 5327
pmBwUtilizationRx_11 5327
pmBwUtilizationRx_12 5327
pmBwUtilizationRx_13 5328
pmBwUtilizationRx_14 5328
pmBwUtilizationRx_15 5329
pmBwUtilizationRx_16 5329
pmBwUtilizationRx_17 5329
pmBwUtilizationRx_18 5330
pmBwUtilizationRx_19 5330
pmBwUtilizationRx_20 5331
pmBwUtilizationTx_00 5331
pmBwUtilizationTx_01 5331
pmBwUtilizationTx_02 5332
pmBwUtilizationTx_03 5332
pmBwUtilizationTx_04 5333

© Copyright IBM Corp. 2008, 2009. All Rights Reserved.

pmBwUtilizationTx_05 5333
pmBwUtilizationTx_06 5333
pmBwUtilizationTx_07 5334
pmBwUtilizationTx_08 5334
pmBwUtilizationTx_09 5335
pmBwUtilizationTx_10 5335
pmBwUtilizationTx_11 5335
pmBwUtilizationTx_12 5336
pmBwUtilizationTx_13 5336
pmBwUtilizationTx_14 5337
pmBwUtilizationTx_15 5337
pmBwUtilizationTx_16 5337
pmBwUtilizationTx_17 5338
pmBwUtilizationTx_18 5338
pmBwUtilizationTx_19 5339
pmBwUtilizationTx_20 5339
pmReceivedAtmCells 5339
pmTransmittedAtmCells 5340
RNC_RELEASE 5340
VpcTp_NodeB Primitive Calculations 5340
GRAPHmultiLineSeparator 5340
NUMDAYS 5340
NUMHOURS 5341
VpcTp_NodeB Peg Counts 5341
NodeB_RELEASE 5341
PERLENSEC 5341
PERLENSEC_K 5341
pmBwErrBlocks 5342
pmBwLostCells 5342
pmBwMissinsCells 5342
pmFwErrBlocks 5343
pmFwLostCells 5343
pmFwMissinsCells 5343
pmLostBrCells 5344
pmLostFpmCells 5344
VpcTp_RNC Primitive Calculations 5344
GRAPHmultiLineSeparator 5344
NUMDAYS 5344
NUMHOURS 5345
VpcTp_RNC Peg Counts 5345
PERLENSEC 5345
PERLENSEC_K 5345
pmBwErrBlocks 5345
pmBwLostCells 5346
pmBwMissinsCells 5346
pmFwErrBlocks 5346
pmFwLostCells 5347
pmFwMissinsCells 5347
pmLostBrCells 5347
pmLostFpmCells 5348

RNC_RELEASE 5348
VplTp_NodeB Primitive Calculations 5348
Avr_CellRate_Recieved_VplTp_NodeB 5348
Avr_CellRate_Transmitted_VplTp_NodeB 5348
GRAPHmultiLineSeparator 5349
NUMDAYS 5349
NUMHOURS 5349
VplTp_NodeB Peg Counts 5349
NodeB_RELEASE 5349
PERLENSEC 5349
PERLENSEC_K 5350
pmReceivedAtmCells 5350
pmTransmittedAtmCells 5350
VplTp_RNC Primitive Calculations 5351
Avr_CellRate_Recieved_VplTp_RNC 5351
Avr_CellRate_Transmitted_VplTp_RNC 5351
GRAPHmultiLineSeparator 5351
NUMDAYS 5351
NUMHOURS 5351
VplTp_RNC Peg Counts 5351
PERLENSEC 5352
PERLENSEC_K 5352
pmReceivedAtmCells 5352
pmTransmittedAtmCells 5353
RNC_RELEASE 5353
Vt15Ttp_NodeB Primitive Calculations 5353
GRAPHmultiLineSeparator 5353
NUMDAYS 5353
NUMHOURS 5353
Vt15Ttp_NodeB Peg Counts 5354
NodeB_RELEASE 5354
PERLENSEC 5354
PERLENSEC_K 5354
pmEs 5355
pmSes 5355
pmUas 5355
Vt15Ttp_RNC Primitive Calculations 5356
GRAPHmultiLineSeparator 5356
NUMDAYS 5356
NUMHOURS 5356
Vt15Ttp_RNC Peg Counts 5356
PERLENSEC 5356
PERLENSEC_K 5356
pmEs 5357
pmSes 5357
pmUas 5357
RNC_RELEASE 5358

Index 5359

© Copyright IBM Corp. 2008, 2009. All Rights Reserved.

1 About This Documentation

The *Performance Data Reference* provides a reference of performance data and fields to use in Prospect® software to create reports. This guide is customized to support Prospect 8.0.6 (Release 8.0.6) for Ericsson GSM/GPRS/UMTS (ReleasePoint 14.3).

Furthermore, this guide contains information to support the following technologies:

This guide was last updated on 22 July 2009.

Please see the current release notes on this product for a list of revision dates for all Prospect publications.

Audience

This guide is intended for technicians and engineers who use the Prospect software to manage and analyze the performance of a telecommunication network.

Required Skills and Knowledge

This guide is intended for users who have knowledge and skills in the following:

- Basics of Windows
- Features and functions of Microsoft Excel
- High school level mathematics
- Basic statistics
- The network from which Prospect software receives data

Document Conventions

This document uses the typographical conventions shown in the following table:

Table 1: General Document Conventions

Format	*Examples*	*Description*
ALL UPPERCASE	• GPS • NULL • MYWEBSERVER	Acronyms, device names, logical operators, registry keys, and some data structures.
Underscore	See Document Conventions	For links within a document or to the Internet. Note that TOC and index links are not underscored. Color of text is determined by browser settings.
Bold	• **Note**: The busy hour determiner is...	Heading text for Notes, Tips, and Warnings.
SMALL CAPS	• The STORED SQL dialog box... • ...click VIEW... • In the main GUI window, select the FILE menu, point to NEW, and then select TRAFFIC TEMPLATE.	Any text that appears on the GUI.
Italic	• A *busy hour* is... • A web server *must* be installed... • See the *User Guide*	New terms, emphasis, and book titles.
`Monospace`	• `./wminstall` • `$ cd /cdrom/cdrom0` • `/xml/dict` • `http://java.sun.com/products/` • `addmsc.sh` • `core.spec` • Type `OK` to continue.	Code text, command line text, paths, scripts, and file names. Text written in the body of a paragraph that the user is expected to enter.

`Monospace Bold`	**`[root] # pkginfo | grep -i perl`**
	`system Perl5 On-Line Manual Pages`
	`system Perl 5.6.1 (POD Documentation)`
	`system Perl 5.6.1`
		For contrast in a code example to show lines the user is expected to enter.

`<Monospace italics>`	`# cd <oracle_setup>`	Used in code examples: command-line variables that you replace with a real name or value. These are always marked with arrow brackets.
`[square bracket]`	`log-archiver.sh [-i][-w][-t]`	Used in code examples: indicates options.

© Copyright IBM Corp. 2008, 2009. All Rights Reserved.

User Publications

Prospect software provides the following user publications in HTML or Adobe Portable Document Format (PDF) formats.

Table 2: Prospect User Documentation

Document	*Description*
Administration Guide	Helps an administrator configure and support Prospect core server software to analyze network performance and perform other network or database management tasks.
Administrator's Quick Reference Card	Presents the principal tasks of a Prospect core server administrator in an easy-to-use format.
Expressions Technical Reference	Provides detailed information about expressions used in special calculations for reports.
Installation Guide	Instructions for installing and configuring the Prospect software.
Open Interface API Guide	Describes how the Open Interface tool enhances your access to information about database peg counts and scenarios.
Performance Data Reference	Provides detailed information including entity hierarchies, peg counts, primitive calculations, and forecast expressions specific to your organization.
Release Notes	Provides technology-specific and late-breaking information about a given Prospect release and important details about installation and operation.
Server Preparation Guide	Provides instructions for installing and setting up Solaris and Oracle software before you install Prospect software.
Server Sizing Tool Guide	Helps an administrator use the sizing tool to calculate the system space needed for the Prospect software and database.
User Guide	Provides conceptual information and procedures for using Prospect software for performance and trending analysis.

Viewing the Desktop Client Help Publications

To view the desktop client Help publications, select a guide from the HELP menu of the Prospect graphical user interface or press F1 for context-sensitive Help. To update the Help files, click the HELP menu on the Prospect Explorer, and select UPDATE ALL HELP FILES.

When Help files are updated, they are downloaded automatically from the Prospect server to the Prospect client. A message box notifies you when this download occurs.

Viewing the Publications in PDF

All of the user publications are available in Adobe Portable Document Format (PDF). To open a PDF, you need the Adobe Acrobat Reader. You can download Adobe Acrobat Reader free of charge from the Adobe Web site. For more details about the Acrobat Reader, see the Adobe Web site http://www.adobe.com/ .

Training and Technical Support

Both training and technical support are available for Prospect software. For technical support, contact us at prospect@us.ibm.com. For training, contact us at training@vallent.com.

For more information on product training courses, contact your delivery management team at:

- Americas: tivamedu@us.ibm.com
- Asia Pacific: tivtrainingap@au1.ibm.com
- EMEA: tived@uk.ibm.com

© Copyright IBM Corp. 2008, 2009. All Rights Reserved.

2 Introduction

This reference contains detailed technical information about Prospect®. The information included in this document includes the following:

- Entity descriptions and reporting hierarchy
- System-defined fields
- Reference of possible Prospect Expressions in primitive calculations

This reference lists most fields that you can include in reports. The fields listed in this reference are system-defined fields and do not reflect the complete list of available fields. Additional fields, such as User-Defined Calculations (UDCs) or External fields, may also be available.

The following table describes the field types in this reference.

Table 1: Field Types

Field Type	***Description***
Data availability	Data availability fields are automatically created for each data file type that is loaded.
Peg count	A performance metric gathered from the wireless network.
Primitive calculation	A performance metric whose value is determined by a set calculation. Some primitive calculations use Prospect expressions. For more information on Prospect expressions, see the *Expressions Technical Reference*.
Roll-up field	Roll-up fields provide aggregated information about a field defined at a child entity level.

© Copyright IBM Corp. 2008, 2009. All Rights Reserved.

3 AUC Traffic Entities

The following figures show the Prospect reporting hierarchy for AUC traffic entities.

Figure 1: Reporting Hierarchy

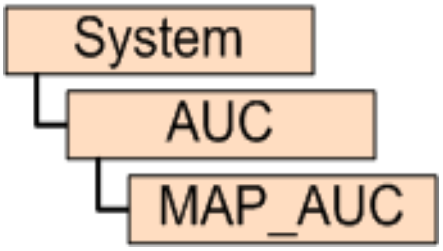

© Copyright IBM Corp. 2008, 2009. All Rights Reserved.

4 AUC Traffic Fields

The following is a list of available AUC Traffic performance data fields.

AUC Primitive Calculations

The following is a list of primitive calculations for the AUC entity.

GRAPHmultiLineSeparator

Special Control Field for Multi-Line Graphs

Calculation

```
""
```

NUMDAYS

of days in Report

Calculation

```
DAYSINREPORT()
```

NUMHOURS

of hours in Summation Data

AUC Peg Counts

The following is a list of peg counts for the AUC entity.

AUC_RELEASE

Release

NGSUBSCNT

Number of registered GSM authentication subscriptions in AUC

NSUBSCNT_AUCSUBS

Number of registered subscriptions in AUC

NUSUBSCNT

Number of registered UMTS authentication subscriptions in AUC

PERLEN

Period Length

MAP_AUC Primitive Calculations

The following is a list of primitive calculations for the MAP_AUC entity.

GRAPHmultiLineSeparator

Special Control Field for Multi-Line Graphs

Calculation

```
""
```

NUMDAYS

of days in Report

Calculation

```
DAYSINREPORT()
```

NUMHOURS

of hours in Summation Data

MAP_AUC Peg Counts

The following is a list of peg counts for the MAP_AUC entity.

AUC_RELEASE

Release

NMAPFLT

Unsuccessful operations due to problems reported by the local TCAP

NMAPSUCC

Successful operations executed

NMAPTOT

Total requests of a MAP operation

PERLEN

Period Length

System Primitive Calculations

The following is a list of primitive calculations for the System entity.

GRAPHmultiLineSeparator

Special Control Field for Multi-Line Graphs

Calculation

```
""
```

NUMDAYS

of days in Report

Calculation

```
DAYSINREPORT()
```

NUMHOURS

of hours in Summation Data

Calculation

PercentActiveSubscribers

Percent Active Subscribers

Calculation

```
sum(MSC.HLRSubs[subString(LocalKey, 1, 6) = "420608"], NHLRREGAST) * 100.0
/ sum(HLR, NSUBSCNT)
```

PercentRegisteredSubscribers

Percent Registered Subscribers

Calculation

```
sum(MSC.HLRSubs[subString(LocalKey, 1, 6) = "420608"],NHLRMSST ) * 100.0 /
sum(HLR, NSUBSCNT)
```

RegisteredInroamers

Registered Inroamers

Calculation

```
sum(MSC.HLRSubs[subString(LocalKey, 1, 6) != "420608"], NHLRMSST)
```

RegisteredOutroamer

Registered Outroamers

Calculation

```
sum(HLR.PLMN[subString(LocalKey, 1, 6) != "420608"], vsum( GPPERPLMNCNT,
PERPLMNCNT ))
```

SubscribersHLR

Subscribers in HLR

Calculation

```
AGGR(HLR, NSUBSCNT)
```

SubscribersVLR

Subscribers in VLR

Calculation

```
sum(MSC.HLRSubs[subString(LocalKey, 1, 6) = "420608"], NHLRMSST)
```

TotalCellTCHTraffic

Average TCH/F Traffic Level

Calculation

```
protect(sum(MSC.BSC.BTSSite.Cell, TCF_TRAFF_VOL))
```

TotalSwitchedTraffic

Generates a predefined graph showing total switch traffic in the network and total air traffic

Calculation

```
sum(MSC, TotalSwitchedTraffic)
```

© Copyright IBM Corp. 2008, 2009. All Rights Reserved.

System Peg Counts

The following is a list of peg counts for the System entity.

rg_reap

ReportGenerator Internal Count

© Copyright IBM Corp. 2008, 2009. All Rights Reserved.

5 FNR Traffic Entities

The following figures show the Prospect reporting hierarchy for FNR traffic entities.

Figure 2: Reporting Hierarchy

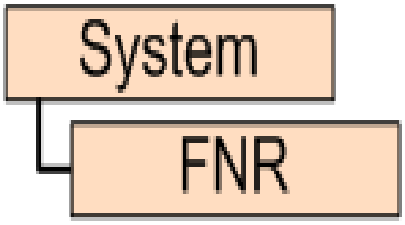

© Copyright IBM Corp. 2008, 2009. All Rights Reserved.

6 FNR Traffic Fields

The following is a list of available FNR Traffic performance data fields.

FNR Primitive Calculations

The following is a list of primitive calculations for the FNR entity.

GRAPHmultiLineSeparator

Special Control Field for Multi-Line Graphs

Calculation

```
""
```

NUMDAYS

of days in Report

Calculation

```
DAYSINREPORT()
```

NUMHOURS

of hours in Summation Data

FNR Peg Counts

The following is a list of peg counts for the FNR entity.

EXPMESSCNT

Number of successful translations performed for EXPORTED subscribers.

FNR_RELEASE

Release

IMPMESSCNT

Number of successful translations performed for IMPORTED subscribers.

INANSISUCCCNT

Number of incoming messages from ANSI-41 networks successfully translated in the SRF application.

INGSMSUCCCNT

Number of incoming messages from GSM or UMTS networks successfully translated in the SRF application.

LOCREQMAPCNT

Number of Location Request operations received in the ANSI-41 MAP application.

LOCREQRELAYCNT

Number of Location Request operations rec. in the ANSI-41 MAP application and relayed through the SCCP user function.

LOCREQSUCCCNT

Number of Location Request operations successfully answered to originating MSC for GSM or UMTS subscribers.

NANSISUBSCNT

Number of individual subscribers in the operators own ANSI-41 network defined in the FNR database.

NGSMSUBSCNT

Number of individual subscribers in the operators own GSM or UMTS network defined in the FNR database.

NPNOACNT

Tot nof mess. rec. with the non stand NOA value indicating Second Query for the subsc. (Not used for GSM 800/1900)

OTHERMESSCNT

Number of successful translations performed for OTHER subscribers.

PERLEN

Period Length

RELAYHOMECNT

Number of messages relayed to the HPLMN except those forwarded to the default route.

RELAYOUTCNT

Number of messages relayed outside the HPLMN.

SMSREQMAPCNT

Number of SMS Request operations received in the ANSI-41 MAP application.

SMSREQRELAYCNT

Number of SMS Request operations received in the ANSI-41 MAP application and relayed through the SCCP user function.

SRFDBMISCNT

Total number of messages answered with an error due to database mismatch. (Not used for GSM 800/1900)

SRIANSISUCCCNT

Number of SRI or RIR operations successfully answered to GMSC for ANSI-41 subscribers.

SRIEXPCNT

Number of SRI or RIR messages successfully answered to GMSC for EXPORTED subscribers.

SRIIMPCNT

Number of SRI or RIR messages successfully answered to GMSC for IMPORTED subscribers.

SRIOTHERCNT

Number of SRI or RIR messages successfully answered to GMSC for OTHER subscribers.

TRANSDBMISCNT

Number of mismatched relationships detected in the database. Associated to functions: NP. (Not used in GSM 800/1900)

TRANSEXPCNT

Number of EXPORTED individual relationships defined in the database. Associated to functions: NP.

TRANSFAILANSICNT

Number of SCCP messages rec. with Global Title in the Called Address and forwarded to the ANSI-41 default route.

TRANSFAILCNT

Nof rec SCCP mess with a global title in the Called Address and fw to default route. Ass to funct: NP, FAMF and NMF.

TRANSIMPCNT

Number of IMPORTED individual relationships defined in the database. Associated to functions: NP.

TRANSOTHERCNT

Number of OTHER individual relationships defined in the database. Associated to functions: NP.

TRANSPAIRCNT

Number of translation relationships defined in the database. Associated to functions: NP, FAMF and NMF.

TRANSUCNT

Number of translations succesfully accomplished for FAMF. Associated to function: FAMF.

TTIN0MESSCNT

Number of messages received with TTIN=0. (Not used for GSM 800/1900)

TTIN10MESSCNT

Counter of all the messages received with TTIN=10

TTIN128MESSCNT

Number of messages received with TTIN=128. (Not used for GSM 800/1900)

TTIN1PARCNT

No of messages received with TTIN defined by application parameter TTIN1. (Not used for GSM 900/1800)

TTIN5PARCNT

No of messages received with TTIN defined by application parameter TTIN5. (Associated to function: NMF)

TTINPOS1CNT

No of messages received with TTIN stored in position 1 of the TT table.

TTINPOS2CNT

No of messages received with TTIN stored in position 2 of the TT table.

TTINPOS3CNT

No of messages received with TTIN stored in position 3 of the TT table.

TTINPOS4CNT

No of messages received with TTIN stored in position 4 of the TT table.

TTINPOS5CNT

No of messages received with TTIN stored in position 5 of the TT table.

TTINPOS6CNT

No of messages received with TTIN stored in position 6 of the TT table.

TTINPOS7CNT

No of messages received with TTIN stored in position 7 of the TT table.

TTINPOS8CNT

No of messages received with TTIN stored in position 8 of the TT table.

UNKSUBSCNT

Number of messages answered with Unknown Subscriber error.

UNSADDRESCNT

Nof rec SCCP mess without a global title in the Called Address and fw to default route. Ass to funct: NP, FAMF and NMF.

UNSUCCANSICNT

Number of SCCP messages rec. without Global Title in the Called Address and forwarded to the ANSI-41 default route.

System Primitive Calculations

The following is a list of primitive calculations for the System entity.

GRAPHmultiLineSeparator

Special Control Field for Multi-Line Graphs

Calculation

```
""
```

NUMDAYS

of days in Report

Calculation

```
DAYSINREPORT()
```

NUMHOURS

of hours in Summation Data

Calculation

PercentActiveSubscribers

Percent Active Subscribers

Calculation

```
sum(MSC.HLRSubs[subString(LocalKey, 1, 6) = "420608"], NHLRREGAST) * 100.0
/ sum(HLR, NSUBSCNT)
```

PercentRegisteredSubscribers

Percent Registered Subscribers

Calculation

```
sum(MSC.HLRSubs[subString(LocalKey, 1, 6) = "420608"],NHLRMSST ) * 100.0 /
sum(HLR, NSUBSCNT)
```

RegisteredInroamers

Registered Inroamers

Calculation

```
sum(MSC.HLRSubs[subString(LocalKey, 1, 6) != "420608"], NHLRMSST)
```

RegisteredOutroamer

Registered Outroamers

© Copyright IBM Corp. 2008, 2009. All Rights Reserved.

Calculation

```
sum(HLR.PLMN[subString(LocalKey, 1, 6) != "420608"], vsum( GPPERPLMNCNT,
PERPLMNCNT ))
```

SubscribersHLR

Subscribers in HLR

Calculation

```
AGGR(HLR, NSUBSCNT)
```

SubscribersVLR

Subscribers in VLR

Calculation

```
sum(MSC.HLRSubs[subString(LocalKey, 1, 6) = "420608"], NHLRMSST)
```

TotalCellTCHTraffic

Average TCH/F Traffic Level

Calculation

```
protect(sum(MSC.BSC.BTSSite.Cell, TCF_TRAFF_VOL))
```

TotalSwitchedTraffic

Generates a predefined graph showing total switch traffic in the network and total air traffic

Calculation

```
sum(MSC, TotalSwitchedTraffic)
```

System Peg Counts

The following is a list of peg counts for the System entity.

rg_reap

ReportGenerator Internal Count

© Copyright IBM Corp. 2008, 2009. All Rights Reserved.

7 GPRS Traffic Entities

The following figures show the Prospect reporting hierarchy for GPRS traffic entities.

Figure 3: Reporting Hierarchy

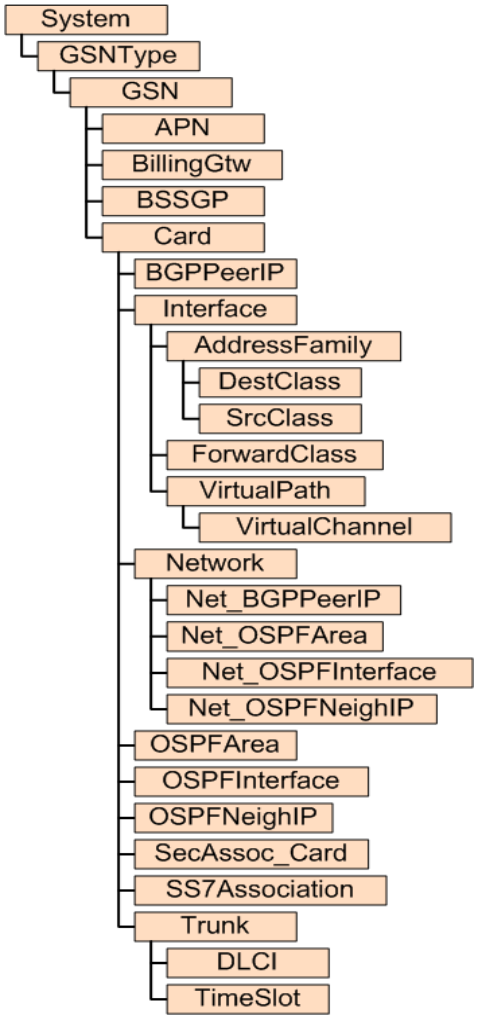

Figure 4: Reporting Hierarchy

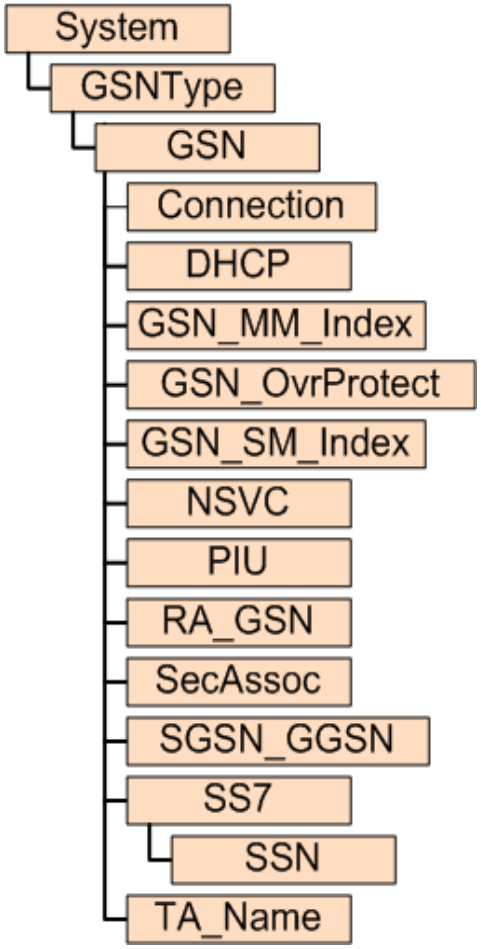

© Copyright IBM Corp. 2008, 2009. All Rights Reserved.

8 GPRS Traffic Fields

The following is a list of available GPRS Traffic performance data fields.

AddressFamily Primitive Calculations

The following is a list of primitive calculations for the AddressFamily entity.

GRAPHmultiLineSeparator

Special Control Field for Multi-Line Graphs

Calculation

```
""
```

NUMDAYS

of days in Report

Calculation

```
DAYSINREPORT()
```

NUMHOURS

of hours in Summation Data

Calculation

UnknownEnterpriseField

Unknown Field exported from Enterprise Server

Calculation

```
nullInt()
```

AddressFamily Peg Counts

The following is a list of peg counts for the AddressFamily entity.

collectionPeriod

Period Length

Data Source

GGSN

Source Field

collectionPeriod

Source Section

AddressFamily General

GSNRelease

Release

Data Source

GGSN

Source Field

GSNRelease

Source Section

AddressFamily General

jnxRpfStatsBytes

The number of bytes received on this interface, belonging to this address family, that have been rejected due to RPF processing.

Data Source

GGSN

Source Field

jnxRpfStatsBytes

Source Section

jnxRpfStatsEntry

jnxRpfStatsPackets

The number of packets received on this interface, belonging to this address family, that have been rejected due to RPF processing.

Data Source

GGSN

Source Field

jnxRpfStatsPackets

Source Section

jnxRpfStatsEntry

APN Primitive Calculations

The following is a list of primitive calculations for the APN entity.

GRAPHmultiLineSeparator

Special Control Field for Multi-Line Graphs

Calculation

```
""
```

NUMDAYS

of days in Report

Calculation

```
DAYSINREPORT()
```

NUMHOURS

of hours in Summation Data

Calculation

pAPNpacketSuccessRate

APN Packet Success Rate is the Success Factor of the overal Packets sent to and Received from an Speciefic APN. Each success factor is weighted by percentage of total packets in either uplink or downlink direction

Calculation

```
( (1- vsum(ggsnApnUplinkDrops *  ggsnApnUplinkPackets,  ggsnApnDown-
linkDrops *  ggsnApnDownlinkPackets) ) * 100.0 )  / ( 1.0 * vsum( ggsnApnU-
plinkPackets, ggsnApnDownlinkPackets ) )
```

pAPNSuccessRate

APN Success Rate shows the success factor of the Overall Operations of specific APN . Each PDP Operation success is weighted by the number of the operation

Calculation

```
( ( 1 - vsum( ggsn_Att_pdp_act, ggsn_att_da_pdp_act, ggsn_att_ms_act,
ggsn_att_init_deact, ggsn_att_ms_deact, -1 * ggsn_cmp_pdp_act, -1 *
ggsn_cmp_da_pdp_act, -1 * ggsn_cmp_ms_act,  -1 * ggsn_cmp_init_deact, -1 *
ggsn_cmp_ms_deact ) ) * 100.0 )/ ( 1.0 * vsum( ggsn_Att_pdp_act,
ggsn_att_da_pdp_act, ggsn_att_ms_act, ggsn_att_init_deact,
ggsn_att_ms_deact ) )
```

pGTPaverPacktSizeDownlinkAPN

Average packet size is the ratio between bytes send and number of packets in Downlink per APN

Calculation

```
(ggsnApnUplinkBytes * 1.0)  / ( 1.0 * ggsnApnUplinkPackets)
```

pGTPaverPacktSizeUplinkAPN

Average packet size is the ratio between bytes send and number of packets in Uplinklink per APN

Calculation

```
(ggsnApnDownlinkBytes * 1.0)  / ( 1.0 * ggsnApnDownlinkPackets)
```

ppacketDropRateDownpAPN

The Ratio between the number of uplink Dropped Packets and Downlink packets processed on a per APN in percent

Calculation

```
(ggsnApnDownlinkDrops * 100.0) / (1.0 * ggsnApnDownlinkPackets)
```

ppacketDropRateUplinkpAPN

The Ratio between the number of uplink Dropped Packets and uplink packets processed on a per APN in percent

Calculation

```
(ggsnApnUplinkDrops * 100.0) / ( 1.0 * ggsnApnUplinkPackets)
```

pPDPActFailpAPN

PDP Activation Failure Rate is the ratio between the number of Attempt PDP context activation minus PDP context Activation completed divided by Attempt PDP context Activation Received at the APN in percent

Calculation

```
(vsum( ggsn_Att_pdp_act, -1 * ggsn_cmp_pdp_act ) * 100.0) / ( 1.0 *
ggsn_Att_pdp_act)
```

pPDPActivMSFailpAPN

PDP Activation MS Failure Rate is the ratio between the number of PDP Attempted MS activations minus the number of PDP Completed MS activations divided by PDP Attempted MS activations in percent

Calculation

```
(vsum( ggsn_att_ms_act, -1 *  ggsn_cmp_ms_act ) * 100.0) / ( 1.0 *
ggsn_att_ms_act )
```

pPDPDeActivGGSNFailpAPN

PDP Deactivation Failure Rate is the ratio between the number of GGSN initiated deactivations minus the number of Completed GGSN deactivations divided by the number of GGSN initiated deactivations at the APN in percent

Calculation

```
(vsum( ggsn_att_init_deact, -1 * ggsn_cmp_init_deact ) * 100.0) / ( 1.0 *
ggsn_att_init_deact)
```

pPDPDeActivMSFailpAPN

PDP deactivation failure rate MS is the ratio between the number of Attempted MS deactivations minus the number of Completed MS deactivations divided by the number of at the APN in percent

Calculation

```
(vsum( ggsn_att_ms_deact, -1 * ggsn_cmp_ms_deact ) * 100.0) / (1.0 *
ggsn_att_ms_deact)
```

pPDPDynamicAddrFailpAPN

PDP activation with dynamic addresses failure Rate is the ratio between the number of Dynamic PDP activation attempt minus the number of PDP completed activation divided by the number of Dynamic PDP activation attempt in the APN in percent

Calculation

```
(vsum( ggsn_att_da_pdp_act, -1 * ggsn_cmp_da_pdp_act) * 100.0) / (1.0 *
ggsn_att_da_pdp_act)
```

UnknownEnterpriseField

Unknown Field exported from Enterprise Server

Calculation

```
nullInt()
```

APN Peg Counts

The following is a list of peg counts for the APN entity.

attActPdpContDynPerApnOfGgsn

Number of dynamic PDP context activation procedures initiated by the MS where a dynamic PDP address is requested (attActPdpContextDynPerApnOfGgsn)

Data Source

GGSN

attActPdpContextPerApnOfGgsn

Number of PDP context activation procedures initiated by the MS

Data Source

GGSN

attDeactPdpContextByGgsnPerApn

Number of attempted PDP Context deactivation procedures initiated by the GGSN

Data Source

GGSN

attDeactPdpContPerApnOfGgsn

Number of PDP context deactivation procedures initiated by the MS on a per APN of the GGSN. (attDeactPdpContextPerApnOfGgsn)

Data Source

GGSN

collectionPeriod

Period Length

Data Source

GGSN

Source Field

collectionPeriod

Source Section

APN General

collectionPeriod_SNMP

Period Length

Data Source

GGSN

Source Field

collectionPeriod

Source Section

APN General

ggsn_apn_avg_actcontext

Average number of active PDP context on the APN during the last 15 minutes Collected using CLI.

Data Source

GGSN

Source Field

AveragePDPcontextsforperiod

Source Section

ggsnstatisticsapn

ggsn_apn_max_actcontext

Max number of activated PDP contexts on the APN Collected using CLI.

Data Source

GGSN

Source Field

MaximumPDPcontextsforperiod

Source Section

ggsnstatisticsapn

ggsn_att_da_pdp_act

Attempted dynamic-address PDP activations collected using CLI

Data Source

GGSN

Source Field

Attempteddynamic-addressPDPactivations

Source Section

ggsnstatisticsapn

ggsn_att_deact

Attempted deactivations collected using CLI

Data Source

GGSN

Source Field

Attempteddeactivations

Source Section

ggsnstatisticsapn

ggsn_att_init_deact

Attempted GGSN initiated deactivations collected using CLI

Data Source

GGSN

Source Field

AttemptedGGSNinitiateddeactivations

Source Section

ggsnstatisticsapn

ggsn_att_ms_act

Attempted MS activations collected using CLI

Data Source

GGSN

Source Field

AttemptedMSactivations

Source Section

ggsnstatisticsapn

ggsn_att_ms_deact

Attempted MS deactivations collected using CLI

Data Source

GGSN

Source Field

AttemptedMSdeactivations

Source Section

ggsnstatisticsapn

ggsn_Att_pdp_act

Attempted PDP activations Collected using CLI

Data Source

GGSN

Source Field

AttemptedPDPactivations

Source Section

ggsnstatisticsapn

ggsn_cmp_da_pdp_act

Completed dynamic-address PDP activations collected using CLI

Data Source

GGSN

Source Field

Completeddynamic-addressPDPactivations

Source Section

ggsnstatisticsapn

ggsn_cmp_init_deact

Completed GGSN initiated deactivations collected using CLI

Data Source

GGSN

Source Field

CompletedGGSNinitiateddeactivations

Source Section

ggsnstatisticsapn

ggsn_cmp_ms_act

Completed MS activations collected using CLI

Data Source

GGSN

Source Field

CompletedMSactivations

Source Section

ggsnstatisticsapn

ggsn_cmp_ms_deact

Completed MS deactivations collected using CLI

Data Source

GGSN

Source Field

CompletedMSdeactivations

Source Section

ggsnstatisticsapn

ggsn_cmp_pdp_act

Completed PDP activations collected using CLI

Data Source

GGSN

Source Field

CompletedPDPactivations

Source Section

ggsnstatisticsapn

ggsnapn_err_ind_recvd

GTP request results Error indications received collected using CLI

Data Source

GGSN

Source Field

GTPrequestresultsErrorindicationsreceived

Source Section

ggsnstatisticsapn

ggsnapn_err_ind_trans

GTP request results Error indications Transmitted collected using CLI

Data Source

GGSN

Source Field

GTPrequestresultsTransmittedindicationsreceived

Source Section

ggsnstatisticsapn

ggsnApnActivePdpContextCount

Total number of active PDP contexts per APN Collected using CLI.

Data Source

GGSN

Source Field

ActivePDPcontexts

Source Section

ggsnstatisticsapn

ggsnApnActivePdpContextCount_jn

Total number of active PDP contexts per APN. (SNMP DataStream)

Data Source

GGSN

Source Field

ggsnApnActivePdpContextCount

Source Section

ggsnApn

ggsnApnActivePdpContextMax

Maximum number of activated PDP contexts on this APN. (Incremented when a PDP context is activated and the number of active PDP contexts = peak.) (SNMP DataStream)

Data Source

GGSN

Source Field

ggsnApnActivePdpContextMax

Source Section

ggsnApn

ggsnApnActivePdpContextMean

Average number of active PDP contexts on the APN during the last 15 minutes. Updated every 15 minutes. (SNMP DataStream)

Data Source

GGSN

Source Field

ggsnApnActivePdpContextMean

Source Section

ggsnApn

ggsnApnActPdpContextCountIpv6

Number of active IPv6 PDP contexts associated with the APN.

Data Source

GGSN

ggsnApnAtmptActivationIpv6

The total number of attempted IPv6 PDP context activation procedures on a per APN

Data Source

GGSN

ggsnApnAttemptedActivation

Number of attempted PDP context activations for this APN. (SNMP DataStream)

Data Source

GGSN

Source Field

ggsnApnAttemptedActivation

Source Section

ggsnApn

ggsnApnAttemptedAuthActivation

The total number of attempted session establishment with user authentication required per APN of this GGSN.

Data Source

GGSN

Source Field

ggsnApnAttemptedAuthActivation

ggsnApnAttemptedDeactivation

Number of attempted PDP context deactivations for this APN. (SNMP DataStream)

Data Source

GGSN

Source Field

ggsnApnAttemptedDeactivation

Source Section

ggsnApn

ggsnApnAttemptedDynActivation

Number of attempted PDP context activations where a dynamic MS IP address is requested for this APN. (SNMP DataStream)

Data Source

GGSN

Source Field

ggsnApnAttemptedDynActivation

Source Section

ggsnApn

ggsnApnAttemptedMSActivation

Number of PDP context activations initiated by the MS for this APN. (SNMP DataStream)

Data Source

GGSN

Source Field

ggsnApnAttemptedMSActivation

Source Section

ggsnApn

ggsnApnAttemptedMSDeactivation

Number of PDP context deactivations initiated by the MS for this APN. (SNMP DataStream)

Data Source

GGSN

Source Field

ggsnApnAttmptMSDeactivation

Source Section

ggsnApn

ggsnApnAttemptedSelfDeactivation

Number of PDP context deactivations initiated by this GGSN for this APN. (SNMP DataStream)

Data Source

GGSN

Source Field

ggsnApnAttmptSelfDeactivation

Source Section

ggsnApn

ggsnApnAttemptedUpdateMsAndSgsn

The total number of attempted PDP context update initiated by MS or SGSN per APN of this GGSN.

Data Source

GGSN

Source Field

ggsnApnAttemptedUpdateMsAndSgsn

ggsnApnCmpltdActivationIpv6

The total number of completed IPv6 PDP context activations on a per APN

Data Source

GGSN

ggsnApnCompletedActivation

Number of completed PDP context activations for this APN. (SNMP DataStream)

Data Source

GGSN

Source Field

ggsnApnCompletedActivation

Source Section

ggsnApn

ggsnApnCompletedDeactivation

Number of completed PDP context deactivations for this APN. (SNMP DataStream)

Data Source

GGSN

Source Field

ggsnApnCompletedDeactivation

Source Section

ggsnApn

ggsnApnCompletedDynActivation

Number of completed PDP context activations where a dynamic MS IP address is requested for this APN. (SNMP DataStream)

Data Source

GGSN

Source Field

ggsnApnCompletedDynActivation

Source Section

ggsnApn

ggsnApnCompletedMSActivation

Number of completed PDP context activations initiated by the MS for this APN. (SNMP DataStream)

Data Source

GGSN

Source Field

ggsnApnCompletedMSActivation

Source Section

ggsnApn

ggsnApnCompletedMSDeactivation

Number of completed PDP context deactivations initiated by the MS for this APN. (SNMP DataStream)

Data Source

GGSN

Source Field

ggsnApnCmpltdMSDeactivation

Source Section

ggsnApn

ggsnApnCompletedSelfDeactivation

Number of completed PDP context deactivations initiated by this GGSN for this APN. (SNMP DataStream)

Data Source

GGSN

Source Field

ggsnApnCmpltdSelfDeactivation

Source Section

ggsnApn

ggsnApnCompletedUpdateMsAndSgsn

The total number of successfully completed PDP context update initiated by MS or SGSN per APN of this GGSN.

Data Source

GGSN

Source Field

ggsnApnCompletedUpdateMsAndSgsn

ggsnApnDownlinkBytes

Number of Downlink GTP-U bytes sent for the specific APN in the GGSN Collected using CLI

Data Source

GGSN

Source Field

DownlinktrafficBytes

Source Section

ggsnstatisticsapn

ggsnApnDownlinkBytes_jn

Number of Downlink GTP-U bytes sent for the specific APN in the GGSN (SNMP DataStream)

Data Source

GGSN

Source Field

ggsnApnDownlinkBytes

Source Section

ggsnApn

ggsnApnDownlinkBytesIpv6

Total bytes for all processed IPv6 downlink packets on a per APN of this GGSN.

Data Source

GGSN

Source Field

ggsnApnDownlinkBytesIpv6

ggsnApnDownlinkDrops

Number of Downlink GTP-U packets dropped for the specific APN Collected using CLI.

Data Source

GGSN

Source Field

DownlinktrafficDroppedpackets

Source Section

ggsnstatisticsapn

ggsnApnDownlinkDrops_jn

Number of Downlink GTP-U packets dropped for the specific APN. (SNMP DataStream)

Data Source

GGSN

Source Field

ggsnApnDownlinkDrops

Source Section

ggsnApn

ggsnApnDownlinkDropsIpv6

The number of dropped IPv6 packets in the downlink direction on a per APN of this GGSN

Data Source

GGSN

Source Field

ggsnApnDownlinkDropsIpv6

ggsnApnDownlinkPackets

Number of Downlink GTP-U packets sent for the specific APN in the GGSN Collected using CLI

Data Source

GGSN

Source Field

DownlinktrafficPackets

Source Section

ggsnstatisticsapn

ggsnApnDownlinkPackets_jn

Number of Downlink GTP-U packets sent for the specific APN in the GGSN (SNMP DataStream)

Data Source

GGSN

Source Field

ggsnApnDownlinkPackets

Source Section

ggsnApn

ggsnApnDownlinkPacketsIpv6

Total downlink IPv6 packets processed on a per APN.

Data Source

GGSN

Source Field

ggsnApnDownlinkPacketsIpv6

ggsnApnFailedAuthActivation

The total number of failed session establishement due to user authentication failure, per APN of this GGSN.

Data Source

GGSN

Source Field

ggsnApnFailedAuthActivation

ggsnApnGiSignalingInBytes

The total number of bytes for incoming signaling packets on the Gi interface per APN of this GGSN.

Data Source

GGSN

Source Field

ggsnApnGiSignalingInBytes

ggsnApnGiSignalingInPackets

The number of incoming packets used for signaling purpose on the Gi interface per APN of this GGSN.

Data Source

GGSN

Source Field

ggsnApnGiSignalingInPackets

ggsnApnGiSignalingOutBytes

The total number of bytes for outgoing signaling packets on the Gi interface per APN of this GGSN.

Data Source

GGSN

Source Field

ggsnApnGiSignalingOutBytes

ggsnApnGiSignalingOutPackets

The number of outgoing packets used for signaling purpose on the Gi interface per APN of this GGSN.

Data Source

GGSN

Source Field

ggsnApnGiSignalingOutPackets

ggsnApnIdleTimeOutDeactivation

The total number of PDP contexts deactivated per APN due to continuous idle time limit

Data Source

GGSN

Source Field

ggsnApnIdleTimeOutDeactivation

ggsnApnNbrOfTftFilters

The current number of TFT filters in use per APN of this GGSN.

Data Source

GGSN

Source Field

ggsnApnNbrOfTftFilters

ggsnApnNghbrSolicitationRcv

The number of neighbor solicitation request received by GGSN, per APN

Data Source

GGSN

ggsnApnNghbrSolicitationRsp

The number of neighbor solicitation responses from GGSN, per APN

Data Source

GGSN

ggsnApnRouterSolicitationRcv

The number of router solicitation request received by GGSN, per APN

Data Source

GGSN

Source Field

ggsnApnRouterSolicitationRcv

ggsnApnRouterSolicitationRsp

The number of router solicitation responses from GGSN, per APN

Data Source

GGSN

Source Field

ggsnApnRouterSolicitationRsp

ggsnApnSessTimeoutDeactivation

The total number of PDP contexts deactivated per APN due to duration limit.

Data Source

GGSN

Source Field

ggsnApnSessTimeoutDeactivation

ggsnApnUplinkBytes

Number of Uplink GTP-U bytes sent for the specific APN in the GGSN Collected using CLI

Data Source

GGSN

Source Field

UplinktrafficBytes

Source Section

ggsnstatisticsapn

ggsnApnUplinkBytes_jn

Number of Uplink GTP-U bytes sent for the specific APN in the GGSN (SNMP DataStream)

Data Source

GGSN

Source Field

ggsnApnUplinkBytes

Source Section

ggsnApn

ggsnApnUplinkBytesIpv6

Total bytes for all processed uplink IPv6 packets on a per APN of this GGSN.

Data Source

GGSN

Source Field

ggsnApnUplinkBytesIpv6

ggsnApnUplinkDrops

Number of Uplink GTP-U packets dropped for the specific APN Collected using CLI.

Data Source

GGSN

Source Field

UplinktrafficDroppedpackets

Source Section

ggsnstatisticsapn

ggsnApnUplinkDrops_jn

Number of Uplink GTP-U packets dropped for the specific APN. (SNMP DataStream)

Data Source

GGSN

Source Field

ggsnApnUplinkDrops

Source Section

ggsnApn

ggsnApnUplinkDropsIpv6

The number of dropped IPv6 packets in the uplink direction on a per APN of this GGSN.

Data Source

GGSN

Source Field

ggsnApnUplinkDropsIpv6

ggsnApnUplinkPackets

Number of Uplink GTP-U packets sent for the specific APN in the GGSN Collected using CLI

Data Source

GGSN

Source Field

UplinktrafficPackets

Source Section

ggsnstatisticsapn

ggsnApnUplinkPackets_jn

Number of Uplink GTP-U packets sent for the specific APN in the GGSN (SNMP DataStream)

Data Source

GGSN

Source Field

ggsnApnUplinkPackets

Source Section

ggsnApn

ggsnApnUplinkPacketsIpv6

Total uplink IPv6 packets processed on a per APN

Data Source

GGSN

Source Field

ggsnApnUplinkPacketsIpv6

GGSNRelease

Release

Data Source

GGSN

Source Field

GGSNRelease

Source Section

APN General

GSNRelease

Release

Data Source

GGSN

Source Field

GSNRelease

Source Section

APN General

nbrOfActivePdpContPerApnAtGgsn

Number of active PDP context per APN (nbrOfActivePdpContextsPerApnAtGgsn)

Data Source

GGSN

succActPdpContDynPerApnOfGgsn

Number of successfully attempted dynamic PDP context activation procedures initiated by the MS where a dynamic PDP address is requested (succActPdpContextDynPerApnOfGgsn)

Data Source

GGSN

succActPdpContextPerApnOfGgsn

Number of successfully completed activation PDP context procedures initiated by the MS

Data Source

GGSN

succDeactPdpContByGgsnPerApn

Number of successful PDP Context deactivation procedures, initiated by the GGSN (succDeactPdpContextByGgsnPerApn)

Data Source

GGSN

succDeactPdpContPerApnOfGgsn

Number of successfully completed PDP context deactivation procedures initiated by the MS (succDeactPdpContextPerApnOfGgsn)

Data Source

GGSN

BGPPeerIP Primitive Calculations

The following is a list of primitive calculations for the BGPPeerIP entity.

GRAPHmultiLineSeparator

Special Control Field for Multi-Line Graphs

Calculation

```
""
```

NUMDAYS

of days in Report

Calculation

```
DAYSINREPORT()
```

NUMHOURS

of hours in Summation Data

Calculation

UnknownEnterpriseField

Unknown Field exported from Enterprise Server

Calculation

```
nullInt()
```

BGPPeerIP Peg Counts

The following is a list of peg counts for the BGPPeerIP entity.

bgpPeerInTotalMessages_30

Total number of messages received from the remote peer on this connection.

Data Source

SGSN

Source Field

bgpPeerInTotalMessages

Source Section

BGP Peer

bgpPeerInUpdates

Number of BGP UPDATE messages received on this connection.

Data Source

SGSN

Source Field

bgpPeerInUpdates

Source Section

BGP Peer

bgpPeerOutTotalMessages_30

Total number of messages transmitted to the remote peer on this connection.

Data Source

SGSN

Source Field

bgpPeerOutTotalMessages

Source Section

BGP Peer

bgpPeerOutUpdates

Number of BGP UPDATE messages transmitted on this connection.

Data Source

SGSN

Source Field

bgpPeerOutUpdates

Source Section

BGP Peer

collectionPeriod

GPRS General

Data Source

SGSN

GSNRelease

Release of GSN

Data Source

SGSN

PeerFsmEstablishedTransitions

The total number of times the BGP FSM is transitioned into the established state

Data Source

SGSN

Source Field

bgpPeerFsmEstablishedTransitions

Source Section

BGP Peer

PeerInUpdateElapsedTime

Elapsed time since the last BGP UPDATE message was received from the peer.

Data Source

SGSN

Source Field

bgpPeerInUpdateElapsedTime

Source Section

BGP Peer

BillingGtw Primitive Calculations

The following is a list of primitive calculations for the BillingGtw entity.

GRAPHmultiLineSeparator

Special Control Field for Multi-Line Graphs

Calculation

```
""
```

NUMDAYS

of days in Report

Calculation

```
DAYSINREPORT()
```

NUMHOURS

of hours in Summation Data

Calculation

UnknownEnterpriseField

Unknown Field exported from Enterprise Server

Calculation

```
nullInt()
```

BillingGtw Peg Counts

The following is a list of peg counts for the BillingGtw entity.

collectionPeriod

Period Length

Data Source

GGSN

ggsnAcctDataRecTransReqCncld

Number of Data Record Transfer Requests sent with indication to CDR packets related to previously unacknowledged sequence number (SNMP DataStream)

Data Source

GGSN

Source Field

ggsnAcctDataRecTransReqCancelled

Source Section

ggsnBillingGtw

ggsnAcctDataRecTransReqSent

Number of Data Record Transfer Requests packets sent by this GGSN (SNMP DataStream)

Data Source

GGSN

Source Field

ggsnAcctDataRecTransReqSent

Source Section

ggsnBillingGtw

ggsnAcctDataRecTransReqSentDup

Number of Data Record Transfer Requests sent with duplicated data record packets by this GGSN (SNMP DataStream)

Data Source

GGSN

Source Field

ggsnAcctDataRecTransReqSentDup

Source Section

ggsnBillingGtw

ggsnAcctDataRecTransRespRcvd

Number of Data Record Transfer Responses received by this GGSN (SNMP DataStream)

Data Source

GGSN

Source Field

ggsnAcctDataRecTransRespReceived

Source Section

ggsnBillingGtw

ggsnAcctPartialRecordGenerated

Number of partial Call Data Records generated (SNMP DataStream)

Data Source

GGSN

Source Field

ggsnAcctPartialRecordGenerated

Source Section

ggsnBillingGtw

ggsnAcctRedirectionReqRcvd

Number of Redirection Request packets received by this GGSN (SNMP DataStream)

Data Source

GGSN

Source Field

ggsnAcctRedirectionReqReceived

Source Section

ggsnBillingGtw

ggsnAcctRedirectionRespSent

Number of Redirection Response packet sent by this GGSN (SNMP DataStream)

Data Source

GGSN

Source Field

ggsnAcctRedirectionRespSent

Source Section

ggsnBillingGtw

Release_BillingGtw

Period Length

Data Source

GGSN

BSSGP Primitive Calculations

The following is a list of primitive calculations for the BSSGP entity.

GRAPHmultiLineSeparator

Special Control Field for Multi-Line Graphs

Calculation

""

Updated: 2009-07-22

NUMDAYS

of days in Report

Calculation

```
DAYSINREPORT()
```

NUMHOURS

of hours in Summation Data

Calculation

BSSGP Peg Counts

The following is a list of peg counts for the BSSGP entity.

bssgpDownlinkOctets

The total number of downlink BSSGP octets per Network Service Entity (NSE).

Data Source

SGSN

Source Field

bssgpDownlinkOctets

Source Section

NSEI

bssgpDownlinkPackets

The total number of downlink BSSGP packets per NSE.

Data Source

SGSN

Source Field

bssgpDownlinkPackets

Source Section

NSEI

bssgpDownlinkPacketsSignalling

The number of downlink BSSGP signaling packets per NSE.

Data Source

SGSN

Source Field

bssgpDownlinkPacketsSignalling

Source Section

NSEI

bssgpStatusBvcUnknown

This measurement provides the number of BVC unknown BSSGP-STATUS messages sent to the Base Station Controller (BSC). These messages are sent to the BSC when traffic, that is, BSSGP-UL-UNITDATA messages, is received on the PTP-BVCs that do not exist in the SGSN. The traffic is then discarded. The PTP-BVCs is non-existent in the SGSN since no BVC-RESET messages, for the PTP-BVC, have been received from the BSC.

Data Source

SGSN

Source Field

bssgpStatusBvcUnknown

Source Section

NSEI

bssgpUplinkOctets

The total number of uplink BSSGP octets per NSE.

Data Source

SGSN

Source Field

bssgpUplinkOctets

Source Section

NSEI

bssgpUplinkPackets

The total number of uplink BSSGP packets per NSE.

Data Source

SGSN

Source Field

bssgpUplinkPackets

Source Section

NSEI

bssgpUplinkPacketsSignalling

The number of uplink BSSGP signaling packets per NSE.

Data Source

SGSN

Source Field

bssgpUplinkPacketsSignalling

Source Section

NSEI

collectionPeriod

GPRS General

Data Source

SGSN

Card Primitive Calculations

The following is a list of primitive calculations for the Card entity.

atmal5IfInPkts

The number of received AAL5 CPCS PDUs passed to a higher-layer. R7: For IBASv3b, the port ID is always zero and the value returned is the sum of all ports.

Calculation

```
atmal5IfInUcastPkts
```

atmal5IfOutPkts

The number of AAL5 CPCS PDUs received from a higher layer for transmission. R7: For IBASv3b, the port ID is always zero and the value returned is the sum of all ports.

Calculation

```
atmal5IfOutUcastPkts
```

AverageCapGTP_CPICthisGGSN

Average capacity of the GTP-C PIC on this GGSN

Calculation

```
ggsnGtpcPdpCapacity
```

CardGOS

Dimensioned Grade of Service

Calculation

DatagramFragFailRate_GSN

Datagram fragm rates show the percentage of datagrams that have been discarded

Calculation

```
ipFragFails * 100.0 / ipFragOKs
```

DatagramInAddressFailRate_GSN

Datagram IP address fail rate shows the percentage of input datagrams discarded

Calculation

```
ipInAddrErrors * 100.0  / ipInReceives
```

DatagramInHeaderFailRate_GSN

IP datagram headers errors Shows the percentage of inc datagrams that been disca

Calculation

```
ipInHdrErrors * 100.0 / ipInReceives
```

DatagramNoRoutesFailRate_GSN

Datagram no Route failure rate shows the percentage of datagrams discarded

Calculation

```
ipOutNoRoutes * 100.0  / ipInReceives
```

GRAPHmultiLineSeparator

Special Control Field for Multi-Line Graphs

Calculation

```
""
```

IcmpInMsgsSucc

ICMP messages which the entity received success rate %

Calculation

```
100 - (icmpInDestUnreachs + icmpInRedirects + icmpOutDestUnreach + OutEr-
rors) * 100.0 / (icmpInMsgs + icmpInDestUnreachs + icmpInRedirects +
icmpOutDestUnreach + OutErrors)
```

NUMDAYS

of days in Report

Calculation

```
DAYSINREPORT()
```

NUMHOURS

of hours in Summation Data

Calculation

pDatagramFragFail

Datagram fragmentation rates show the percentage of datagrams that have been discarded because they needed to be fragmented compare to successful fragmentation.

Calculation

```
ipFragFails * 100.0 / ipFragOKs
```

pDatagramInAddrFailRate

Datagram IP address failure rate shows the percentage of input datagrams discarded because the IP address in their IP header's destination field was not a valid address.

Calculation

```
ipInAddrErrors * 100.0 / ipInReceives
```

pDatagramInHdrFail

IP datagram headers errors

Calculation

```
ipInHdrErrors * 100.0 / ipInReceives
```

pDatagramNoRoutesFail

Datagram no Route failure rate shows the percentage of datagrams discarded because no route could be found to transmit them to their destination.

Calculation

```
ipOutNoRoutes * 100.0 / ipInReceives
```

pToIDatagramsFail

Total IP datagram failures rate shows the percentage of incoming datagrams that have been discarded.

Calculation

```
ipInReceives * 100.0 / vsum(ipInHdrErrors, ipInAddrErrors, ipOutNoRoutes,
ipFragFails)
```

TotalCapGTP_CPICThisGGSN

Total capacity of the GTP-C PIC on this GGSN

Calculation

```
ggsnGtpcPdpCapacity
```

TotIpDatagramsFailRate_GSN

Tot IP datagr fail rate shows the percentage of inc datagr that have been disca

Calculation

```
ipInReceives * 100.0 / (ipInHdrErrors + ipInAddrErrors + ipOutNoRoutes +
ipFragFails)
```

UnknownEnterpriseField

Unknown Field exported from Enterprise Server

Calculation

```
nullInt()
```

Card Peg Counts

The following is a list of peg counts for the Card entity.

atmal5CRCErrors

The number of AAL5 CPCS PDUs received with CRC-32 errors. R7: For IBASv3b, the port ID is always zero and the value returned is the sum of all ports.

Data Source

SGSN

Source Field

atmal5CRCErrors

Source Section

ATM

atmal5IfInDiscards

Number of received AAL5 CPCS PDUs discarded. R7: For IBASv3b, the port ID is always zero and the value returned is the sum of all ports.

Data Source

SGSN

Source Field

atmal5IfInDiscards

Source Section

ATM

atmal5IfInErrors

Number of errored AAL5 CPCS PDUs received. R7: For IBASv3b, the port ID is always zero and the value returned is the sum of all ports.

Data Source

SGSN

Source Field

atmal5IfInErrors

Source Section

ATM

atmal5IfInOctets

The number of received AAL5 CPCS PDU octets. R7: For IBASv3b, the port ID is always zero and the value returned is the sum of all ports.

Data Source

SGSN

Source Field

atmal5IfInOctets

Source Section

ATM

atmal5IfInUcastPkts

The number of received AAL5 CPCS PDUs passed to a higher-layer.

Data Source

SGSN

Source Field

atmal5IfInUcastPkts

Source Section

ATM

atmal5IfOutDiscards

Number of AAL5 CPCS PDUs received for transmission that are discarded. R7: For IBASv3b, the port ID is always zero and the value returned is the sum of all ports.

Data Source

SGSN

Source Field

atmal5IfOutDiscards

Source Section

ATM

atmal5IfOutErrors

Number of AAL5 CPCS PDUs that could not be transmitted due to errors. R7: For IBASv3b, the port ID is always zero and the value returned is the sum of all ports.

Data Source

SGSN

Source Field

atmal5IfOutErrors

Source Section

ATM

atmal5IfOutOctets

The number of AAL5 CPCS PDU octets transmitted. R7: For IBASv3b, the port ID is always zero and the value returned is the sum of all ports.

Data Source

SGSN

Source Field

atmal5IfOutOctets

Source Section

ATM

atmal5IfOutUcastPkts

The number of AAL5 CPCS PDUs received from a higher layer for transmission

Data Source

SGSN

Source Field

atmal5IfOutUcastPkts

Source Section

ATM

atmal5OverSizedSDUs

The number of AAL5 CPCS PDUs discarded on this AAL5 VCC at the interface associated with an AAL5 entity because the AAL5 SDUs were too large. R7: For IBASv3b, the port ID is always zero and the value returned is the sum of all ports.

Data Source

SGSN

Source Field

atmal5OverSizedSDUs

Source Section

ATM

atmlCellDrops

Number of cell drops. R7: Not applicable for IBASv3b (Interface Board for ATM Single-mode version 3b).

Data Source

SGSN

Source Field

atmlCellDrops

Source Section

ATM

atmlCLPCells

Number of received cells with Cell Loss Priority (CLP) flag set. R7: Not applicable for IBASv3b (Interface Board for ATM Single-mode version 3b).

Data Source

SGSN

Source Field

atmlCLPCells

Source Section

ATM

atmlCongestionErrors

Number of received cells with PT field indicating congestion experienced. R7: Not applicable for IBASv3b (Interface Board for ATM Single-mode version 3b).

Data Source

SGSN

Source Field

atmlCongestionErrors

Source Section

ATM

atmlCPIErrors

Number of received cells with Common Part Indicator (CPI) field different from zero. R7: Not applicable for IBASv3b (Interface Board for ATM Single-mode version 3b).

Data Source

SGSN

Source Field

atmlCPIErrors

Source Section

ATM

atmlInvalidCells

Number of invalid cells. R7: Not applicable for IBASv3b (Interface Board for ATM Single-mode version 3b).

Data Source

SGSN

Source Field

atmlInvalidCells

Source Section

ATM

atmlVpiVciLookupErrors

Number of VPI VCI look-up errors. R7: For IBASv3b, the port ID is always zero and the value returned is the sum of all ports.

Data Source

SGSN

Source Field

atmlVpiVciLookupErrors

Source Section

ATM

atmplLineAIS

Number of Line Alarm Indication Signal (AIS) events.

Data Source

SGSN

Source Field

atmplLineAIS

Source Section

ATM

atmplLineOverheadBIPErrors

Number of line overhead Bit Interleaved Parity (BIP) errors.

Data Source

SGSN

Source Field

atmplLineOverheadBIPErrors

Source Section

ATM

atmplLineRDI

Number of Line Remote Defect Indication (RDI) events.

Data Source

SGSN

Source Field

atmplLineRDI

Source Section

ATM

atmplLineREI

Number of line Remote Error Indications(REI), former FEBE.

Data Source

SGSN

Source Field

atmplLineREI

Source Section

ATM

atmplLOF

Number of Loss Of Frames (LOF) events.

Data Source

SGSN

Source Field

atmplLOF

Source Section

ATM

atmplLOP

Number of Loss Of Pointer (LOP) events.

Data Source

SGSN

Source Field

atmplLOP

Source Section

ATM

atmplLOS

Number of Loss Of Signals (LOS) events.

Data Source

SGSN

Source Field

atmplLOS

Source Section

ATM

atmplOOF

Number of Out Of Frames (OOF) events.

Data Source

SGSN

Source Field

atmplOOF

Source Section

ATM

atmplPathAIS

Number of path Alarm Indication Signal (AIS) events.

Data Source

SGSN

Source Field

atmplPathAIS

Source Section

ATM

atmplPathOverheadBIPErrors

Number of path overhead Bit Interleaved Parity (BIP) errors.

Data Source

SGSN

Source Field

atmplPathOverheadBIPErrors

Source Section

ATM

atmplPathRDI

Number of path Remote Defect Indication (RDI) events.

Data Source

SGSN

Source Field

atmplPathRDI

Source Section

ATM

atmplPathREI

Number of path Remote Error Indications(REI), former FEBE.

Data Source

SGSN

Source Field

atmplPathREI

Source Section

ATM

atmplSectionOverheadBIPErrors

Number of section overhead Bit Interleaved Parity (BIP) errors.

Data Source

SGSN

Source Field

atmplSectionOverheadBIPErrors

Source Section

ATM

atmtclCorrectableHECs

Count of correctable HEC errors, if single-bit HEC error correction is enabled, otherwise not valid.

Data Source

SGSN

Source Field

atmtclCorrectableHECs

Source Section

ATM

atmtclEgressCells

Total number of user cells in egress direction.

Data Source

SGSN

Source Field

atmtclEgressCells

Source Section

ATM

atmtclIngressCells

Total number of error free user cells in ingress direction.

Data Source

SGSN

Source Field

atmtclIngressCells

Source Section

ATM

atmtclOCDEvents

The number of times the Out of Cell Delineation (OCD) events occurred.

Data Source

SGSN

Source Field

atmtclOCDEvents

Source Section

ATM

atmtclUncorrectableHECs

Count of uncorrectable HEC errors, if single-bit HEC error correction is enabled, otherwise it is a count of all errored cells

Data Source

SGSN

Source Field

atmtclUncorrectableHECs

Source Section

ATM

bgpPeerInTotalMessages_21

Total number of messages received from the remote peer on this connection.

Data Source

SGSN

Source Field

bgpPeerInTotalMessages

Source Section

BGP Peer

bgpPeerOutTotalMessages_21

Total number of messages transmitted to the remote peer on this connection.

Data Source

SGSN

Source Field

bgpPeerOutTotalMessages

Source Section

BGP Peer

collectionPeriod

GPRS General

Data Source

SGSN

collectionPeriod_SNMP_GGSN

Period Length

Data Source

GGSN

Source Field

collectionPeriod_SNMP_GGSN

Source Section

Card General

ethInErrors_Unit0

Number of incoming errors, unit 0.

Data Source

SGSN

Source Field

ethInErrors

Source Section

Ethernet

ethInErrors_Unit1

Number of incoming errors, unit 1.

Data Source

SGSN

Source Field

ethInErrors

Source Section

Ethernet

ethInErrorsBUF_Unit0

Number of incoming buffer errors, unit 0.

Data Source

SGSN

Source Field

ethInErrorsBUF

Source Section

Ethernet

ethInErrorsBUF_Unit1

Number of incoming buffer errors, unit 1.

Data Source

SGSN

Source Field

ethInErrorsBUF

Source Section

Ethernet

ethInErrorsCE_Unit0

Number of incoming CRC errors, unit 0.

Data Source

SGSN

Source Field

ethInErrorsCE

Source Section

Ethernet

ethInErrorsCE_Unit1

Number of incoming CRC errors, unit 1.

Data Source

SGSN

Source Field

ethInErrorsCE

Source Section

Ethernet

ethInErrorsCLBLK_Unit0

Number of incoming clblk errors, unit 0.

Data Source

SGSN

Source Field

ethInErrorsCLBLK

Source Section

Ethernet

ethInErrorsCLBLK_Unit1

Number of incoming clblk errors, unit 1.

Data Source

SGSN

Source Field

ethInErrorsCLBLK

Source Section

Ethernet

ethInErrorsCS_Unit0

Number of incoming collisions seen, unit 0.

Data Source

SGSN

Source Field

ethInErrorsCS

Source Section

Ethernet

ethInErrorsCS_Unit1

Number of incoming collisions seen, unit 1.

Data Source

SGSN

Source Field

ethInErrorsCS

Source Section

Ethernet

ethinErrorsFF_Unit0

Failed the address recognition filtering, unit 0.

Data Source

SGSN

Source Field

ethinErrorsFF

Source Section

Ethernet

ethinErrorsFF_Unit1

Failed the address recognition filtering, unit 1.

Data Source

SGSN

Source Field

ethinErrorsFF

Source Section

Ethernet

ethInErrorsMBLK_Unit0

Number of incoming mblock errors, unit 0.

Data Source

SGSN

Source Field

ethInErrorsMBLK

Source Section

Ethernet

ethInErrorsMBLK_Unit1

Number of incoming mblock errors, unit 1.

Data Source

SGSN

Source Field

ethInErrorsMBLK

Source Section

Ethernet

ethInErrorsRF_Unit0

Number of runt frames (frames damaged by collision), unit 0.

Data Source

SGSN

Source Field

ethInErrorsRF

Source Section

Ethernet

ethInErrorsRF_Unit1

Number of runt frames (frames damaged by collision), unit 1.

Data Source

SGSN

Source Field

ethInErrorsRF

Source Section

Ethernet

ethInErrorsTL_Unit0

Ethernet frame Too Long, unit 0.

Data Source

SGSN

Source Field

ethInErrorsTL

Source Section

Ethernet

ethInErrorsTL_Unit1

Ethernet frame Too Long, unit 1.

Data Source

SGSN

Source Field

ethInErrorsTL

Source Section

Ethernet

ethInMF_Unit0

Retired fr 5.0.10.0.0-Ethernet Multicast frames received, unit 0.

Data Source

SGSN

Source Field

ethInMF

Source Section

Ethernet

ethInMF_Unit1

Retired fr 5.0.10.0.0-Ethernet Multicast frames received, unit 1.

Data Source

SGSN

Source Field

ethInMF

Source Section

Ethernet

ethInPkts_Unit0

Retired fr 5.0.10.0.0-Total number of packets, delivered by this sub-layer to a higher (sub-)layer.

Data Source

SGSN

Source Field

ethInPkts

Source Section

Ethernet

ethInPkts_Unit1

Retired fr 5.0.10.0.0-Total number of packets, delivered by this sub-layer to a higher (sub-)layer.

Data Source

SGSN

Source Field

ethInPkts

Source Section

Ethernet

ethInUcastPkts_Unit0

Total number of packets, delivered by this sub-layer to a higher (sub-)layer.

Data Source

SGSN

Source Field

ethInUcastPkts

Source Section

Ethernet

ethInUcastPkts_Unit1

Total number of packets, delivered by this sub-layer to a higher (sub-)layer.

Data Source

SGSN

Source Field

ethInUcastPkts

Source Section

Ethernet

ethOutErrorOWN_Unit0

Number of outgoing own errors, unit 0.

Data Source

SGSN

Source Field

ethOutErrorOWN

Source Section

Ethernet

ethOutErrorOWN_Unit1

Number of outgoing own errors, unit 1.

Data Source

SGSN

Source Field

ethOutErrorOWN

Source Section

Ethernet

ethOutErrors_Unit0

Number of outbound errors, unit 0.

Data Source

SGSN

Source Field

ethOutErrors

Source Section

Ethernet

ethOutErrors_Unit1

Number of outbound errors, unit 1.

Data Source

SGSN

Source Field

ethOutErrors

Source Section

Ethernet

ethOutErrorsBUF_Unit0

Number of outgoing buffer errors, unit 0.

Data Source

SGSN

Source Field

ethOutErrorsBUF

Source Section

Ethernet

ethOutErrorsBUF_Unit1

Number of outgoing buffer errors, unit 1.

Data Source

SGSN

Source Field

ethOutErrorsBUF

Source Section

Ethernet

ethOutErrorsEC_Unit0

Number of outgoing excessive collisions, unit 0.

Data Source

SGSN

Source Field

ethOutErrorsEC

Source Section

Ethernet

ethOutErrorsEC_Unit1

Number of outgoing excessive collisions, unit 1.

Data Source

SGSN

Source Field

ethOutErrorsEC

Source Section

Ethernet

ethOutErrorsLC_Unit0

Number of outgoing late collisions, unit 0.

Data Source

SGSN

Source Field

ethOutErrorsLC

Source Section

Ethernet

ethOutErrorsLC_Unit1

Number of outgoing late collisions, unit 1.

Data Source

SGSN

Source Field

ethOutErrorsLC

Source Section

Ethernet

ethOutErrorsLO_Unit0

Number of outgoing loss of carrier errors, unit 0.

Data Source

SGSN

Source Field

ethOutErrorsLO

Source Section

Ethernet

ethOutErrorsLO_Unit1

Number of outgoing loss of carrier errors, unit 1.

Data Source

SGSN

Source Field

ethOutErrorsLO

Source Section

Ethernet

ethOutErrorsNC_Unit0

Number of outgoing no carrier errors, unit 0.

Data Source

SGSN

Source Field

ethOutErrorsNC

Source Section

Ethernet

ethOutErrorsNC_Unit1

Number of outgoing no carrier errors, unit 1.

Data Source

SGSN

Source Field

ethOutErrorsNC

Source Section

Ethernet

ethOutErrorsTO_Unit0

Number of outgoing transmit jabber timeouts, unit 0.

Data Source

SGSN

Source Field

ethOutErrorsTO

Source Section

Ethernet

ethOutErrorsTO_Unit1

Number of outgoing transmit jabber timeouts, unit 1.

Data Source

SGSN

Source Field

ethOutErrorsTO

Source Section

Ethernet

ethOutErrorsTXD_Unit0

Number of transmit descriptor errors (TxD could not be created), unit 0.

Data Source

SGSN

Source Field

ethOutErrorsTXD

Source Section

Ethernet

ethOutErrorsTXD_Unit1

Number of transmit descriptor errors (TxD could not be created), unit 1.

Data Source

SGSN

Source Field

ethOutErrorsTXD

Source Section

Ethernet

ethOutErrorsUF_Unit0

Number of outgoing underflow errors, unit 0.

Data Source

SGSN

Source Field

ethOutErrorsUF

Source Section

Ethernet

ethOutErrorsUF_Unit1

Number of outgoing underflow errors, unit 1.

Data Source

SGSN

Source Field

ethOutErrorsUF

Source Section

Ethernet

ethOutPkts_Unit0

Retired fr 5.0.10.0.0-Total number of packets that higher-level protocols requested to be transmitted, unit 0.

Data Source

SGSN

Source Field

ethOutPkts

Source Section

Ethernet

ethOutPkts_Unit1

Retired fr 5.0.10.0.0-Total number of packets that higher-level protocols requested to be transmitted, unit 1.

Data Source

SGSN

Source Field

ethOutPkts

Source Section

Ethernet

ethOutUcastPkts_Unit0

Total number of packets that higher-level protocols requested to be transmitted.

Data Source

SGSN

Source Field

ethOutUcastPkts

Source Section

Ethernet

ethOutUcastPkts_Unit1

Total number of packets that higher-level protocols requested to be transmitted.

Data Source

SGSN

Source Field

ethOutUcastPkts

Source Section

Ethernet

filterIpsecPacketsOnCPU

Number of packets classified as IPsec by filter on this CPU.

Data Source

SGSN

Source Field

filterIpsecPacketsOnCPU

Source Section

IP Filtering CPU

filterIpsecPacketsOnCPU_IPSecFilter

Number of packets classified as IPsec by filter on this CPU, type 5.

Data Source

SGSN

Source Field

filterIpsecPacketsOnCPU

Source Section

IP Filtering CPU

filterIpsecPacketsOnCPU_normalFilter

Number of packets classified as IPsec by filter on this CPU, type 2.

Data Source

SGSN

Source Field

filterIpsecPacketsOnCPU

Source Section

IP Filtering CPU

filterPacketsAllowedOnCPU

Number of packets allowed by filter on this CPU.

Data Source

SGSN

Source Field

filterPacketsAllowedOnCPU

Source Section

IP Filtering CPU

filterPacketsAllowedOnCPU_IPSecFilter

Number of packets allowed by filter on this CPU, type 5.

Data Source

SGSN

Source Field

filterPacketsAllowedOnCPU

Source Section

IP Filtering CPU

filterPacketsAllowedOnCPU_normalFilter

Number of packets allowed by filter on this CPU, type 2.

Data Source

SGSN

Source Field

filterPacketsAllowedOnCPU

Source Section

IP Filtering CPU

filterPacketsDeniedOnCPU

Number of packets denied by filter on this CPU.

Data Source

SGSN

Source Field

filterPacketsDeniedOnCPU

Source Section

IP Filtering CPU

filterPacketsDeniedOnCPU_IPSecFilter

Number of packets denied by filter on this CPU, type 5.

Data Source

SGSN

Source Field

filterPacketsDeniedOnCPU

Source Section

IP Filtering CPU

filterPacketsDeniedOnCPU_normalFilter

Number of packets denied by filter on this CPU, type 2.

Data Source

SGSN

Source Field

filterPacketsDeniedOnCPU

Source Section

IP Filtering CPU

ggsnGtpcControlLoad

Weighted PDP context load in control of the GGSN-C PIC

Data Source

GGSN

Source Field

ggsnGtpcControlLoad

ggsnGtpcControlPacketDrops

Total number of control packets that have been dropped by this GGSN-C (GTP-C) PIC (SNMP DataStream)

Data Source

GGSN

Source Field

ggsnGtpcControlPacketDrops

Source Section

ggsnGtpcTable

ggsnGtpcCpuUsage

The CPU utilization in percentage of the GGSN-C PIC.

Data Source

GGSN

Source Field

ggsnGtpcCpuUsage

ggsnGtpcMemory

The amount of memory on the GGSN-C PIC, in bytes

Data Source

GGSN

Source Field

ggsnGtpcMemory

ggsnGtpcMemoryUsed

The amount of used memory on the GGSN-C PIC, in bytes.

Data Source

GGSN

Source Field

ggsnGtpcMemoryUsed

ggsnGtpcNbrOfActivePdpContexts

The number of active PDP contexts on this GGSN-C PIC.

Data Source

GGSN

Source Field

ggsnGtpcNbrOfActivePdpContexts

ggsnGtpcNbrOfActPdpContxtIpv6

The number of active IPv6 PDP contexts on this GGSN-C PIC.

Data Source

GGSN

ggsnGtpcPdpCapacity

The capacity of the GTP-C PIC.

Data Source

GGSN

Source Field

ggsnGtpcPdpCapacity

Source Section

ggsnGtpcTable

ggsnGtpcRole

The current role of the GTP-C.

Data Source

GGSN

Source Field

ggsnGtpcRole

Source Section

ggsnGtpcTable

ggsnGtpcStatus

The current status of the GTP-C, example BLOCK.

Data Source

GGSN

Source Field

ggsnGtpcStatus

Source Section

ggsnGtpcTable

ggsnGtpcTftFilterDepthMax

The maximum number of TFT filters per user on this GGSN-C PIC in the last statistics update period

Data Source

GGSN

Source Field

ggsnGtpcTftFilterDepthMax

ggsnGtpcTftFilterDepthMean

The mean number of TFT filters per user on this GGSN-C PIC in the last staistics update period

Data Source

GGSN

Source Field

ggsnGtpcTftFilterDepthMean

ggsnGtpuCpuUsage

The CPU utilization in percentage of the GGSN-U PIC.

Data Source

GGSN

Source Field

ggsnGtpuCpuUsage

ggsnGtpuMemory

The amount of memory on the GGSN-U PIC, in bytes.

Data Source

GGSN

Source Field

ggsnGtpuMemory

ggsnGtpuMemoryUsed

The amount of used memory on the GGSN-U PIC, in bytes.

Data Source

GGSN

Source Field

ggsnGtpuMemoryUsed

ggsnGtpuNbrOfActivePdpContexts

The number of active PDP contexts on this GGSN-U PIC.

Data Source

GGSN

Source Field

ggsnGtpuNbrOfActivePdpContexts

ggsnGtpuNbrOfActPdpContxtIpv6

The number of active IPv6 PDP contexts on this GGSN-U PIC.

Data Source

GGSN

ggsnGtpuPayloadLoad

Weighted PDP context load in payload of the GGSN-U PIC

Data Source

GGSN

Source Field

ggsnGtpuPayloadLoad

ggsnGtpuPdpCapacity

The capacity of the GGSN-U (GTP-U) PIC.

Data Source

GGSN

Source Field

ggsnGtpuPdpCapacity

ggsnGtpuRole

The current role of the GGSN-U (GTP-U) PIC .

Data Source

GGSN

Source Field

ggsnGtpuRole

ggsnGtpuStatus

The current status of the GGSN-U (GTP-U) PIC, example BLOCK.

Data Source

GGSN

Source Field

ggsnGtpuStatus

ggsnGtpuUserDownlinkDrops

The number of downlink (GTP-U) packets dropped by this GGSN-U PIC.

Data Source

GGSN

Source Field

ggsnGtpuUserDownlinkDrops

ggsnGtpuUserUplinkDrops

The number of uplink (GTP-U) packets dropped by this GGSN-U PIC.

Data Source

GGSN

Source Field

ggsnGtpuUserUplinkDrops

ggsnPicNbrOfActivePdpContexts

The number of active PDP contexts on a per PIC of this GGSN.

Data Source

GGSN

Source Field

ggsnPicNbrOfActivePdpContexts

Source Section

ggsnPicStatsTable

GSNRelease

Release of GSN

icmpInDestUnreachs

Number of ICMP Destination Unreachable messages received.

Data Source

SGSN

Source Field

icmpInDestUnreachs

Source Section

ICMP

icmpInEchoReps

Number of ICMP Echo Reply messages received.

Data Source

SGSN

Source Field

icmpInEchoReps

Source Section

ICMP

icmpInEchos

Number of ICMP Echo (request) messages received.

Data Source

SGSN

Source Field

icmpInEchos

Source Section

ICMP

icmpInErrors

Number of ICMP messages which the entity received but determined as having ICMPspecific errors

Data Source

SGSN

Source Field

icmpInErrors

Source Section

ICMP

icmpInMsgs

Total number of ICMP messages which the entity received

Data Source

SGSN

Source Field

icmpInMsgs

Source Section

ICMP

icmpInParmProbs

Number of ICMP Parameter Problem messages received.

Data Source

SGSN

Source Field

icmpInParmProbs

Source Section

ICMP

icmpInRedirects

Number of ICMP Redirect messages received.

Data Source

SGSN

Source Field

icmpInRedirects

Source Section

ICMP

icmpInTimeExcds

Number of ICMP Time Exceeded messages received.

Data Source

SGSN

Source Field

icmpInTimeExcds

Source Section

ICMP

icmpOutDestUnreach

Number of ICMP Destination Unreachable messages sent.

Data Source

SGSN

Source Field

icmpOutDestUnreach

Source Section

ICMP

icmpOutEchoReps

Number of ICMP Echo Reply messages sent.

Data Source

SGSN

Source Field

icmpOutEchoReps

Source Section

ICMP

icmpOutEchos

Number of ICMP Echo (request) messages sent.

Data Source

SGSN

Source Field

icmpOutEchos

Source Section

ICMP

icmpOutMsgs

Total number of ICMP messages which this entity attempted to send.

Data Source

SGSN

Source Field

icmpOutMsgs

Source Section

ICMP

icmpOutParmProbs

Number of ICMP Parameter Problem messages sent.

Data Source

SGSN

Source Field

icmpOutParmProbs

Source Section

ICMP

icmpOutRedirects

Number of ICMP Redirect messages sent

Data Source

SGSN

Source Field

icmpOutRedirects

Source Section

ICMP

icmpOutTimeExcds

Number of ICMP Time Exceeded messages sent.

Data Source

SGSN

Source Field

icmpOutTimeExcds

Source Section

ICMP

interfaceType

Interface Type (one of: ATM, BGP, ETH, IP or ALL)

Data Source

SGSN

Source Section

GPRS General

ipForwardingTableEntries

The total number of Forwarding table entries.

Data Source

SGSN

Source Field

ipForwardingTableEntries

Source Section

IP

ipForwDatagrams

Number of input datagrams for which this entity was not their final IP destination

Data Source

SGSN

Source Field

ipForwDatagrams

Source Section

IP

ipFragCreates

Number of IP datagram fragments that have been generated as a result of fragmentation at this entity.

Data Source

SGSN

Source Field

ipFragCreates

Source Section

IP

ipFragFails

Number of IP datagrams that have been discarded because they needed to be fragmented at this entity but could not be

Data Source

SGSN

Source Field

ipFragFails

Source Section

IP

ipFragOKs

Number of IP datagrams that have been fragmented at this entity.

Data Source

SGSN

Source Field

ipFragOKs

Source Section

IP

ipInAddrErrors

Number of input datagrams discarded because the IP address in their IP header's destination field was not a valid address

Data Source

SGSN

Source Field

ipInAddrErrors

Source Section

IP

ipInHdrErrors

Number of input datagrams discarded due to errors in their IP headers

Data Source

SGSN

Source Field

ipInHdrErrors

Source Section

IP

ipInReceives

Total number of input datagrams received from interfaces, including those received in error.

Data Source

SGSN

Source Field

ipInReceives

Source Section

IP

ipOutNoRoutes

Number IP datagrams discarded because no route could be found to transmit them to their destination

Data Source

SGSN

Source Field

ipOutNoRoutes

Source Section

IP

ipReasmFails

Number of failures detected by the IP re-assembly algorithm for whatever reason

Data Source

SGSN

Source Field

ipReasmFails

Source Section

IP

ipReasmOKs

Number of IP datagrams successfully re-assembled.

Data Source

SGSN

Source Field

ipReasmOKs

Source Section

IP

ipReasmReqds

Number IP fragments received which needed to be reassembled at this entity.

Data Source

SGSN

Source Field

ipReasmReqds

Source Section

IP

ipsecIncorrectPackets

Number of packets not processed

Data Source

SGSN

Source Field

ipsecIncorrectPackets

Source Section

IPsec/GRE CPU

ipsecIssIllegalSpi

Number of incoming packets which spi does not have an SA in IPSEC SAD.

Data Source

SGSN

Source Field

ipsecIssIllegalSpi

Source Section

IPsec/GRE CPU

ipsecIssInOkPackets

Number of packets which has been processed correctly, coming in.

Data Source

SGSN

Source Field

ipsecIssInOkPackets

Source Section

IPsec/GRE CPU

ipsecIssMd5Mismatch

Number of times the comparison between the given value and the calculated (with md5 alg.) value did not match.

Data Source

SGSN

Source Field

ipsecIssMd5Mismatch

Source Section

IPsec/GRE CPU

ipsecIssOutOkPackets

Number of packets which has been processed correctly, going out.

Data Source

SGSN

Source Field

ipsecIssOutOkPackets

Source Section

IPsec/GRE CPU

ipsecIssSha1Mismatch

Number of times the comparison between the given value and the calculated (with sha1 alg.) value did not match.

Data Source

SGSN

Source Field

ipsecIssSha1Mismatch

Source Section

IPsec/GRE CPU

ipsecWaPacketsProcessed

This counter is only to be used as a randomizer for the function that drops packets during high CPU load

Data Source

SGSN

Source Field

ipsecWaPacketsProcessed

Source Section

IPsec/GRE CPU

ospfExternLsaCount

Number of external (LS type 5) link-state advertisements in the link-state database.

Data Source

SGSN

Source Field

ospfExternLsaCount

Source Section

OSPF CPU

ospfOriginateNewLsas

Number of new link-state advertisements that have been originated

Data Source

SGSN

Source Field

ospfOriginateNewLsas

Source Section

OSPF CPU

ospfRxNewLsas_R21

Number of link-state advertisements received determined to be new instantiations

Data Source

SGSN

Source Field

ospfRxNewLsas

Source Section

OSPF CPU

OutErrors

The nr of ICMP mess which entity did not send due to probl disco within ICMP

Data Source

SGSN

Source Field

icmpOutErrors

Source Section

ICMP

Release_SNMP_GGSN

Release

Data Source

GGSN

Source Field

Release_SNMP_GGSN

Source Section

Card General

Connection Primitive Calculations

The following is a list of primitive calculations for the Connection entity.

GRAPHmultiLineSeparator

Special Control Field for Multi-Line Graphs

Calculation

""

Updated: 2009-07-22

NUMDAYS

of days in Report

Calculation

```
DAYSINREPORT()
```

NUMHOURS

of hours in Summation Data

Calculation

UnknownEnterpriseField

Unknown Field exported from Enterprise Server

Calculation

```
nullInt()
```

Connection Peg Counts

The following is a list of peg counts for the Connection entity.

collectionPeriod

GPRS General

Data Source

SGSN

filterPackets_in_30

Number of packets classified as IPsec by filter, in.

Data Source

SGSN

Source Field

filterIpsecPackets

Source Section

IP Filtering Interface/SA

filterPackets_out_30

Number of packets classified as IPsec by filter, out.

Data Source

SGSN

Source Field

filterIpsecPackets

Source Section

IP Filtering Interface/SA

filterPacketsAllowed_in_30

Number of packets allowed by filter, in.

Data Source

SGSN

Source Field

filterPacketsAllowed

Source Section

IP Filtering Interface/SA

filterPacketsAllowed_out_30

Number of packets allowed by filter, out.

Data Source

SGSN

Source Field

filterPacketsAllowed

Source Section

IP Filtering Interface/SA

filterPacketsDenied_in_30

Number of packets denied by filter, in.

Data Source

SGSN

Source Field

filterPacketsDenied

Source Section

IP Filtering Interface/SA

filterPacketsDenied_out_30

Number of packets denied by filter, out.

Data Source

SGSN

Source Field

filterPacketsDenied

Source Section

IP Filtering Interface/SA

GSNRelease

Release of GSN

Data Source

SGSN

DestClass Primitive Calculations

The following is a list of primitive calculations for the DestClass entity.

GRAPHmultiLineSeparator

Special Control Field for Multi-Line Graphs

Calculation

""

NUMDAYS

of days in Report

Calculation

```
DAYSINREPORT()
```

NUMHOURS

of hours in Summation Data

Calculation

UnknownEnterpriseField

Unknown Field exported from Enterprise Server

Calculation

```
nullInt()
```

DestClass Peg Counts

The following is a list of peg counts for the DestClass entity.

collectionPeriod

Period Length

Data Source

GGSN

Source Field

collectionPeriod

Source Section

DestClass General

GSNRelease

Release

Data Source

GGSN

Source Field

GSNRelease

Source Section

DestClass General

jnxDcuStatsBytes

The number of bytes received on this interface, belonging to this address family that match this Destination Class.

Data Source

GGSN

Source Field

jnxDcuStatsBytes

Source Section

jnxDcuStatsEntry

jnxDcuStatsPackets

The number of packets received on this interface, belonging to this address family that match this Destination Class.

Data Source

GGSN

Source Field

jnxDcuStatsPackets

Source Section

jnxDcuStatsEntry

DHCP Primitive Calculations

The following is a list of primitive calculations for the DHCP entity.

GRAPHmultiLineSeparator

Special Control Field for Multi-Line Graphs

Calculation

""

NUMDAYS

of days in Report

Calculation

```
DAYSINREPORT()
```

NUMHOURS

of hours in Summation Data

Calculation

UnknownEnterpriseField

Unknown Field exported from Enterprise Server

Calculation

```
nullInt()
```

DHCP Peg Counts

The following is a list of peg counts for the DHCP entity.

collectionPeriod

Period Length

Data Source

GGSN

ggsnDhcpClientRepliesDiscarded

Number of replies received and dropped by the GGSN from this DHCP server (SNMP DataStream)

Data Source

GGSN

Source Field

ggsnDhcpClientRepliesDiscarded

Source Section

ggsnDhcp

ggsnDhcpClientRepliesReceived

Number of replies received by the GGSN from this DHCP server (SNMP DataStream)

Data Source

GGSN

Source Field

ggsnDhcpClientRepliesReceived

Source Section

ggsnDhcp

ggsnDhcpClientRequestsSent

Number of Request sent by the GGSN to this DHCP server (SNMP DataStream)

Data Source

GGSN

Source Field

ggsnDhcpClientRequestsSent

Source Section

ggsnDhcp

Release_Dhcp

Period Length

Data Source

GGSN

DLCI Primitive Calculations

The following is a list of primitive calculations for the DLCI entity.

DLCIGOS

Dimensioned Grade of Service

Calculation

Gb_FR_TrafficRX

Total Amount of data transmitted on the Gb interface at the Fr layer received , in Kbytes (including headers)

Calculation

```
(frPvcRxBytes * 1.0) / 1024.0
```

Gb_FR_TrafficTX

Total Amount of data transmitted on the Gb interface at the Fr layer transmitted , in Kbytes (including headers)

Calculation

```
(frPvcTxBytes * 1.0) / 1024.0
```

GRAPHmultiLineSeparator

Special Control Field for Multi-Line Graphs

Calculation

```
""
```

MaxCIR

Max committed data transfer rate (in bits per second) is the maximum information capacity of the virtual circuit i.e. PVC, that is guaranteed to a particular subscriber on a particular DLCI.

Calculation

```
frPvcCirHiWat
```

MinCIR

Min committed data transfer rate (in bits per second) is the minimum of CIR of the virtual circuit i.e. PVC, that is guaranteed to a particular subscriber on a particular DLCI.

Calculation

```
frPvcCirLoWat
```

NUMDAYS

of days in Report

Calculation

```
DAYSINREPORT()
```

NUMHOURS

of hours in Summation Data

Calculation

pDisEligRx

Discard Eligibility Rate Receive indicates the rate that the received frames are to be discarded in case of overload. This indication can be regarded as a prioritising function, although frames without a DE indication can also be discarded.

Calculation

```
frPvcRxDe * 100.0 / frPvcRxFrames
```

pDisEligTx

Discard Eligibility Rate indicates the rate that the transmitted frames are to be discarded in case of overload. This indication can be regarded as a prioritising function, although frames without a DE indication can also be discarded.

Calculation

```
frPvcTxDe * 100.0 / (frPvcTxFrames * 1.0)
```

UnknownEnterpriseField

Unknown Field exported from Enterprise Server

Calculation

```
nullInt()
```

UtilizationRX

Utilization RX shows the Quality of reception in the sense of not experiencing any congestion on a PVC link on a particular DLCI.

Calculation

```
(frPvcRxFrames - frPvcRxStops) * 100.0 / (frPvcRxFrames * 1.0)
```

UtilizationTX

Utilization TX shows the Quality of transmission in the sense of not experiencing any congestion on a PVC link on a particular DLCI.

Calculation

```
(frPvcTxFrames - frPvcTxStops) * 100.0 / (frPvcTxFrames * 1.0)
```

DLCI Peg Counts

The following is a list of peg counts for the DLCI entity.

collectionPeriod

GPRS General

Data Source

SGSN

frMfeRxDiscards

Incoming PDUs/fragments discarded

Data Source

SGSN

Source Field

frMfeRxDiscards

Source Section

Frame Relay MFE

frMfeRxFragmentedPDUs

Fragmented PDUs received

Data Source

SGSN

Source Field

frMfeRxFragmentedPDUs

Source Section

Frame Relay MFE

frMfeRxFragments

Fragments received

Data Source

SGSN

Source Field

frMfeRxFragments

Source Section

Frame Relay MFE

frMfeRxPDUs

PDUs successfully received

Data Source

SGSN

Source Field

frMfeRxPDUs

Source Section

Frame Relay MFE

frMfeRxReassemblyMismatch

Missing fragment(s) detected

Data Source

SGSN

Source Field

frMfeRxReassemblyMismatch

Source Section

Frame Relay MFE

frMfeRxReassemblyTooBig

Incoming PDUs too large

Data Source

SGSN

Source Field

frMfeRxReassemblyTooBig

Source Section

Frame Relay MFE

frMfeTxBlocked

Outgoing PDUs blocked

Data Source

SGSN

Source Field

frMfeTxBlocked

Source Section

Frame Relay MFE

frMfeTxDiscards

Outgoing PDUs discarded

Data Source

SGSN

Source Field

frMfeTxDiscards

Source Section

Frame Relay MFE

frMfeTxFragmentedPDUs

Outgoing PDUs fragmented

Data Source

SGSN

Source Field

frMfeTxFragmentedPDUs

Source Section

Frame Relay MFE

frMfeTxFragmentErrors

Fragmentation errors

Data Source

SGSN

Source Field

frMfeTxFragmentErrors

Source Section

Frame Relay MFE

frMfeTxFragments

Fragments successfully sent

Data Source

SGSN

Source Field

frMfeTxFragments

Source Section

Frame Relay MFE

frMfeTxPDUs

PDUs successfully sent

Data Source

SGSN

Source Field

frMfeTxPDUs

Source Section

Frame Relay MFE

frPvcCirHiWat

Committed information rate high water mark (PVC)

Data Source

SGSN

Source Field

frPvcCirHiWat

Source Section

Frame Relay PVC

frPvcCirLoWat

Committed information rate low water mark (PVC)

Data Source

SGSN

Source Field

frPvcCirLoWat

Source Section

Frame Relay PVC

frPvcRxBECNs

BECN bit set on received frame count (PVC).

Data Source

SGSN

Source Field

frPvcRxBECNs

Source Section

Frame Relay PVC

frPvcRxBytes

Total number of bytes received (PVC).

Data Source

SGSN

Source Field

frPvcRxBytes

Source Section

Frame Relay PVC

frPvcRxDe

Discard eligibility receive total (PVC).

Data Source

SGSN

Source Field

frPvcRxDe

Source Section

Frame Relay PVC

frPvcRxFECNs

FECN bit set on received frame count (PVC).

Data Source

SGSN

Source Field

frPvcRxFECNs

Source Section

Frame Relay PVC

frPvcRxFrames

Total number of frames received (PVC).

Data Source

SGSN

Source Field

frPvcRxFrames

Source Section

Frame Relay PVC

frPvcRxStops

Failed can puts to upper read queue (PVC).

Data Source

SGSN

Source Field

frPvcRxStops

Source Section

Frame Relay PVC

frPvcTxBytes

Total number of bytes transmitted (PVC).

Data Source

SGSN

Source Field

frPvcTxBytes

Source Section

Frame Relay PVC

frPvcTxDe

Discard eligibility transmit total (PVC).

Data Source

SGSN

Source Field

frPvcTxDe

Source Section

Frame Relay PVC

frPvcTxFrames

Total number of frames transmitted (PVC).

Data Source

SGSN

Source Field

frPvcTxFrames

Source Section

Frame Relay PVC

frPvcTxStops

Number of congested transmit frames (PVC).

Data Source

SGSN

Source Field

frPvcTxStops

Source Section

Frame Relay PVC

GSNRelease

Release of GSN

Data Source

SGSN

ForwardClass Primitive Calculations

The following is a list of primitive calculations for the ForwardClass entity.

GRAPHmultiLineSeparator

Special Control Field for Multi-Line Graphs

Calculation

""

NUMDAYS

of days in Report

Calculation

```
DAYSINREPORT()
```

NUMHOURS

of hours in Summation Data

Calculation

UnknownEnterpriseField

Unknown Field exported from Enterprise Server

Calculation

```
nullInt()
```

ForwardClass Peg Counts

The following is a list of peg counts for the ForwardClass entity.

collectionPeriod

Period Length

Data Source

GGSN

Source Field

collectionPeriod

Source Section

ForwardClass General

GSNRelease

Release

Data Source

GGSN

Source Field

GSNRelease

Source Section

ForwardClass General

jnxCosIfqHpNonTcpRedDropByteRate

The rate at which high PLP non TCP bytes belonging to the specified forwarding class, were RED-dropped at the output on the given interface.

Data Source

GGSN

Source Field

jnxCosIfqHpNonTcpRedDropByteRate

Source Section

jnxCosIfqStatsEntry

jnxCosIfqHpNonTcpRedDropBytes

The total number of high PLP (Packet Loss Priority) non TCP bytes belonging to the specified forwarding class RED-dropped at the output on the given interface.

Data Source

GGSN

Source Field

jnxCosIfqHpNonTcpRedDropBytes

Source Section

jnxCosIfqStatsEntry

jnxCosIfqHpNonTcpRedDropPktRate

The rate at which high PLP non TCP packets belonging to the specified forwarding class, were RED-dropped at the output on the given interface.

Data Source

GGSN

Source Field

jnxCosIfqHpNonTcpRedDropPktRate

Source Section

jnxCosIfqStatsEntry

jnxCosIfqHpNonTcpRedDropPkts

The total number of high PLP nonTCP packets belonging to the specified forwarding class RED-dropped at the output on the given interface.

Data Source

GGSN

Source Field

jnxCosIfqHpNonTcpRedDropPkts

Source Section

jnxCosIfqStatsEntry

jnxCosIfqHpTcpRedDropByteRate

The rate at which high PLP TCP bytes belonging to the specified forwarding class, were RED-dropped at the output on the given interface.

Data Source

GGSN

Source Field

jnxCosIfqHpTcpRedDropByteRate

Source Section

jnxCosIfqStatsEntry

jnxCosIfqHpTcpRedDropBytes

The total number of high PLP TCP bytes belonging to the specified forwarding class RED-dropped at the output on the given interface

Data Source

GGSN

Source Field

jnxCosIfqHpTcpRedDropBytes

Source Section

jnxCosIfqStatsEntry

jnxCosIfqHpTcpRedDropPktRate

The rate (expressed in packets per second) at which high PLP (Packet Loss Priority) TCP packets belonging to the specified forwarding class, were RED-dropped at the output on the given interface.

Data Source

GGSN

Source Field

jnxCosIfqHpTcpRedDropPktRate

Source Section

jnxCosIfqStatsEntry

jnxCosIfqHpTcpRedDropPkts

The total number of high PLP (Packet Loss Priority) TCP packets belonging to the specified forwarding class RED-dropped at the output on the given interface.

Data Source

GGSN

Source Field

jnxCosIfqHpTcpRedDropPkts

Source Section

jnxCosIfqStatsEntry

jnxCosIfqLpNonTcpRedDropByteRate

The rate at which low PLP non TCP bytes belonging to the specified forwarding class, were RED-dropped at the output on the given interface.

Data Source

GGSN

Source Field

jnxCosIfqLpNonTcpRedDropByteRate

Source Section

jnxCosIfqStatsEntry

jnxCosIfqLpNonTcpRedDropBytes

The total number of low PLP (Packet Loss Priority) non TCP bytes belonging to the specified forwarding class RED-dropped at the output on the given interface.

Data Source

GGSN

Source Field

jnxCosIfqLpNonTcpRedDropBytes

Source Section

jnxCosIfqStatsEntry

jnxCosIfqLpNonTcpRedDropPktRate

The rate (expressed in packets per second) at which low PLP (Packet Loss Priority) non TCP packets belonging to the specified forwarding class, were RED-dropped at the output on the given interface.

Data Source

GGSN

Source Field

jnxCosIfqLpNonTcpRedDropPktRate

Source Section

jnxCosIfqStatsEntry

jnxCosIfqLpNonTcpRedDropPkts

The total number of low PLP (Packet Loss Priority) non TCP packets belonging to the specified forwarding class RED-dropped at the output on the given interface.

Data Source

GGSN

Source Field

jnxCosIfqLpNonTcpRedDropPkts

Source Section

jnxCosIfqStatsEntry

jnxCosIfqLpTcpRedDropByteRate

The rate at which low PLP TCP bytes belonging to the specified forwarding class, were RED-dropped at theoutput on the given interface.

Data Source

GGSN

Source Field

jnxCosIfqLpTcpRedDropByteRate

Source Section

jnxCosIfqStatsEntry

jnxCosIfqLpTcpRedDropBytes

The total number of low PLP TCP bytes belonging to the specified forwarding class RED-dropped at the output on the given interface.

Data Source

GGSN

Source Field

jnxCosIfqLpTcpRedDropBytes

Source Section

jnxCosIfqStatsEntry

jnxCosIfqLpTcpRedDropPktRate

The rate at which low PLP TCP packets belonging to the specified forwarding class, were RED-dropped at the output on the given interface.

Data Source

GGSN

Source Field

jnxCosIfqLpTcpRedDropPktRate

Source Section

jnxCosIfqStatsEntry

jnxCosIfqLpTcpRedDropPkts

The total number of low PLP (Packet Loss Priority) TCP packets belonging to the specified forwarding class RED-dropped at the output on the given interface.

Data Source

GGSN

Source Field

jnxCosIfqLpTcpRedDropPkts

Source Section

jnxCosIfqStatsEntry

jnxCosIfqQedByteRate

The rate at which bytes belonging to the specified forwarding class were queued at the output on the given interface.

Data Source

GGSN

Source Field

jnxCosIfqQedByteRate

Source Section

jnxCosIfqStatsEntry

jnxCosIfqQedBytes

Number of bytes of specified forwarding class queued at the output on the given interface.

Data Source

GGSN

Source Field

jnxCosIfqQedBytes

Source Section

jnxCosIfqStatsEntry

jnxCosIfqQedPktRate

The rate at which packets belonging to the the specified forwarding class were queued at the output on the given interface.

Data Source

GGSN

Source Field

jnxCosIfqQedPktRate

Source Section

jnxCosIfqStatsEntry

jnxCosIfqQedPkts

The total number of packets of specified forwarding class queued at the output on the given interface.

Data Source

GGSN

Source Field

jnxCosIfqQedPkts

Source Section

jnxCosIfqStatsEntry

jnxCosIfqTailDropPktRate

The rate at which packets belonging to the specified forwarding class were taildropped at the output on the given interface.

Data Source

GGSN

Source Field

jnxCosIfqTailDropPktRate

Source Section

jnxCosIfqStatsEntry

jnxCosIfqTailDropPkts

The total number of packets of specified forwarding class dropped due to tail dropping at the output on the given interface.

Data Source

GGSN

Source Field

jnxCosIfqTailDropPkts

Source Section

jnxCosIfqStatsEntry

jnxCosIfqTotalRedDropByteRate

The rate at which bytes belonging to the specified forwarding class were RED-dropped at the output on the given interface.

Data Source

GGSN

Source Field

jnxCosIfqTotalRedDropByteRate

Source Section

jnxCosIfqStatsEntry

jnxCosIfqTotalRedDropBytes

The total number of bytes belonging to the specified forwarding class RED-dropped at the output on the given interface.

Data Source

GGSN

Source Field

jnxCosIfqTotalRedDropBytes

Source Section

jnxCosIfqStatsEntry

jnxCosIfqTotalRedDropPktRate

The most recent estimate of per-second RED-dropped packets for the specified forwarding class at the output on the given interface

Data Source

GGSN

Source Field

jnxCosIfqTotalRedDropPktRate

Source Section

jnxCosIfqStatsEntry

jnxCosIfqTotalRedDropPkts

Total number of packets belonging to the specified forwarding class dropped due to RED at the output on the given interface.

Data Source

GGSN

Source Field

jnxCosIfqTotalRedDropPkts

Source Section

jnxCosIfqStatsEntry

jnxCosIfqTxedByteRate

The current output byte rate for the specified forwarding class on the given interface.

Data Source

GGSN

Source Field

jnxCosIfqTxedByteRate

Source Section

jnxCosIfqStatsEntry

jnxCosIfqTxedBytes

Total number of bytes belonging to specified forwarding class, transmitted on the given interface.

Data Source

GGSN

Source Field

jnxCosIfqTxedBytes

Source Section

jnxCosIfqStatsEntry

jnxCosIfqTxedPktRate

The rate at which packets of specified forwarding class are transmitted on the given interface.

Data Source

GGSN

Source Field

jnxCosIfqTxedPktRate

Source Section

jnxCosIfqStatsEntry

jnxCosIfqTxedPkts

Number of packets of specified forwarding class transmitted on the given interface.

Data Source

GGSN

Source Field

jnxCosIfqTxedPkts

Source Section

jnxCosIfqStatsEntry

GSN Available Data Fields

The following is a list of available data fields for the GSN entity.

CGSN_AvailableDataPct

CGSN Available Data Pct

GGSN_CLI_AvailableDataPct

GGSN_CLI Available Data Pct

GGSN_Snmp_AvailableDataPct

GGSN_Snmp Available Data Pct

SGSN_AvailableDataPct

SGSN Available Data Pct

GSN Primitive Calculations

The following is a list of primitive calculations for the GSN entity.

attActPdpContextMSPerSgsn

Retired fr 5.0.11.0.11. Replaced by SMAttActPdpContextG. The counter is incremented for each Activate PDP Context Request received on the Gb Interface

Calculation

```
SMAttActPdpContextG
```

attDeactPdpContextGgsnPerSgsn

Retired fr 5.0.10.0.0. Replaced by SMAttDeactPdpContextGgsnG.The counter is incremented for each Deactivate PDP Context Request received on the Gn Interface

Calculation

```
SMAttDeactPdpContextGgsnG
```

attDeactPdpContextMsPerSgsn

Retired fr 5.0.10.0.0. Replaced by SMAttDeactPdpContextMsG.The counter is incremented for each Deactivate PDP Context Request received on the Gb Interface

Calculation

```
SMAttDeactPdpContextMsG
```

AverageCapGTP_CPICallGGSN

Average capacity of the GTP-C PIC on all GGSNs

Calculation

```
aggr (Card, ggsnGtpcPdpCapacity )
```

ethInErrors

Number of incoming errors.

Calculation

```
AGGR(Card, vsum(ethInErrors_Unit0, ethInErrors_Unit1))
```

ethInErrorsBUF

Number of incoming buffer errors.

Calculation

```
AGGR(Card, vsum(ethInErrorsBUF_Unit0, ethInErrorsBUF_Unit1))
```

ethInErrorsCE

Number of incoming CRC errors.

Calculation

```
AGGR(Card, vsum(ethInErrorsCE_Unit0, ethInErrorsCE_Unit1))
```

ethInErrorsCLBLK

Number of incoming clblk errors.

Calculation

```
AGGR(Card, vsum(ethInErrorsCLBLK_Unit0, ethInErrorsCLBLK_Unit1))
```

ethInErrorsCS

Number of incoming collisions seen.

Calculation

```
AGGR(Card, vsum(ethInErrorsCS_Unit0, ethInErrorsCS_Unit1))
```

ethInErrorsFF

Failed the address recognition filtering.

Calculation

```
AGGR(Card, vsum(ethinErrorsFF_Unit0, ethinErrorsFF_Unit1))
```

ethInErrorsMBLK

Number of incoming mblock errors.

Calculation

```
AGGR(Card, vsum(ethInErrorsMBLK_Unit0, ethInErrorsMBLK_Unit1))
```

ethInErrorsRF

Number of runt frames (frames damaged by collision).

Calculation

```
AGGR(Card, vsum(ethInErrorsRF_Unit0, ethInErrorsRF_Unit1))
```

ethInErrorsTL

Ethernet frame too long.

Calculation

```
AGGR(Card, vsum(ethInErrorsTL_Unit0, ethInErrorsTL_Unit1))
```

ethInMF

Retired fr 5.0.10.0.0-Ethernet Multicast frames received.

Calculation

```
AGGR(Card, vsum(ethInMF_Unit0, ethInMF_Unit1))
```

ethInPkts

Retired fr 5.0.10.0.0-The total nr of packets, delivered by this sub-layer to a higher (sub-)layer.

Calculation

```
AGGR(Card, vsum(ethInPkts_Unit0, ethInPkts_Unit1))
```

ethOutErrorOWN

Number of outgoing own errors.

Calculation

```
AGGR(Card, vsum(ethOutErrorOWN_Unit0, ethOutErrorOWN_Unit1))
```

ethOutErrors

Number of outbound errors.

Calculation

```
AGGR(Card, vsum(ethOutErrors_Unit0, ethOutErrors_Unit1))
```

ethOutErrorsBUF

Number of outgoing buffer errors.

Calculation

```
AGGR(Card, vsum(ethOutErrorsBUF_Unit0, ethOutErrorsBUF_Unit1))
```

ethOutErrorsEC

Number of outgoing excessive collisions.

Calculation

```
AGGR(Card, vsum(ethOutErrorsEC_Unit0, ethOutErrorsEC_Unit1))
```

ethOutErrorsLC

Number of outgoing late collisions.

Calculation

```
AGGR(Card, vsum(ethOutErrorsLC_Unit0, ethOutErrorsLC_Unit1))
```

ethOutErrorsLO

Number of outgoing loss of carrier errors.

Calculation

```
AGGR(Card, vsum(ethOutErrorsLO_Unit0, ethOutErrorsLO_Unit1))
```

ethOutErrorsNC

Number of outgoing no carrier errors.

Calculation

```
AGGR(Card, vsum(ethOutErrorsNC_Unit0, ethOutErrorsNC_Unit1))
```

ethOutErrorsTO

Number of outgoing transmit jabber timeouts.

Calculation

```
AGGR(Card, vsum(ethOutErrorsTO_Unit0, ethOutErrorsTO_Unit1))
```

ethOutErrorsTXD

Number of transmit descriptor errors (TxD could not be created).

Calculation

```
AGGR(Card, vsum(ethOutErrorsTXD_Unit0, ethOutErrorsTXD_Unit1))
```

ethOutErrorsUF

Number of outgoing underflow errors.

Calculation

```
AGGR(Card, vsum(ethOutErrorsUF_Unit0, ethOutErrorsUF_Unit1))
```

ethOutPkts

Retired fr 5.0.10.0.0-The total nr of packets that higher-level protocols requested to be transmitted

Calculation

```
AGGR(Card, vsum(ethOutPkts_Unit0, ethOutPkts_Unit1))
```

filterAllowedPacketsOnSlot

Number of packets allowed by filter on this CPU.

Calculation

```
AGGR(Card, filterPacketsAllowedOnCPU)
```

filterDeniedPacketsOnSlot

Number of packets denied by filter on this CPU.

Calculation

```
AGGR(Card, filterPacketsDeniedOnCPU)
```

filterIpsecPacketsOnSlot

Number of packets classified as IPsec by filter on this CPU.

Calculation

```
AGGR(Card, filterIpsecPacketsOnCPU)
```

gprsMmSgsnUnsuccessfulPagingProcedures

Retired fr 5.0.10.0.0-Unsuccessful paging procedures per SGSN.

Calculation

```
gprsMmUnsuccessfulPagingProcedures
```

GRAPHmultiLineSeparator

Special Control Field for Multi-Line Graphs

Calculation

```
""
```

icmpInDestUnreachs

Number of ICMP Destination Unreachable messages received.

Calculation

```
AGGR(Card, icmpInDestUnreachs)
```

icmpInDestUnreachsRate

ICMP Destination Unreachable Rate shows Ratio of ICMP Destination Unreachable messages received to total ICMP messages received.

Calculation

```
( jnxicmpInDestUnreachs * 100.0 ) / ( 1.0 * jnxicmpInMsgs )
```

icmpInEchoReps

Number of ICMP Echo Reply messages received.

Calculation

```
AGGR(Card, icmpInEchoReps)
```

icmpInEchos

Number of ICMP Echo (request) messages received.

Calculation

```
AGGR(Card, icmpInEchos)
```

icmpInErrorRate

Icmp Error Rate shows the ratio of ICMP messages which the entity received but determined as having ICMP-specific errors (bad ICMP checksums, bad length, etc. to the total ICMP Messages

Calculation

```
( jnxicmpInErrors * 100.0 ) / ( 1.0 * jnxicmpInMsgs)
```

icmpInErrors

Nr of ICMP mess which the entity rec but determ as having ICMP-specific errors

Calculation

```
AGGR(Card, icmpInErrors)
```

icmpInMsgs

Total nr of ICMP messages which the entity received

Calculation

```
AGGR(Card, icmpInMsgs)
```

IcmpInMsgsSucc

ICMP messages which the entity received success rate

Calculation

```
100 * (1 - ((icmpInDestUnreachs + icmpInRedirects + icmpOutDestUnreachs +
icmpOutErrors) * 1.0 / (icmpInMsgs + icmpInDestUnreachs + icmpInRedirects +
icmpOutDestUnreachs + icmpOutErrors)))
```

icmpInParmProbs

Number of ICMP Parameter Problem messages received.

Calculation

```
AGGR(Card, icmpInParmProbs)
```

icmpInRedirects

Number of ICMP Redirect messages received.

Calculation

```
AGGR(Card, icmpInRedirects)
```

icmpInTimeExcds

Number of ICMP Time Exceeded messages received.

Calculation

```
AGGR(Card, icmpInTimeExcds)
```

icmpOutDestUnreachs

Number of ICMP Destination Unreachable messages sent.

Calculation

```
AGGR(Card, icmpOutDestUnreach)
```

icmpOutDestUnreachsRate

ICMP Error Rate is ratio between the number of ICMP messages which this entity did not send and the total number of ICMP messages which this entity attempted to send.

Calculation

```
( jnxicmpOutDestUnreachs * 100.0 ) / ( 1.0 * jnxicmpOutMsgs )
```

icmpOutEchoReps

Number of ICMP Echo Reply messages sent.

Calculation

```
AGGR(Card, icmpOutEchoReps)
```

icmpOutEchos

Number of ICMP Echo (request) messages sent.

Calculation

```
AGGR(Card, icmpOutEchos)
```

icmpOutErrors

The nr of ICMP mess which entity did not send due to probl disco within ICMP

Calculation

```
AGGR(Card, OutErrors)
```

icmpOutErrorsRate

ICMP Error Rate is ratio between the number of ICMP messages which this entity did not send and the total number of ICMP messages.

Calculation

```
( jnxicmpOutErrors * 100.0 )  / ( 1.0 * jnxicmpOutMsgs )
```

icmpOutMsgs

Total number of ICMP messages which this entity attempted to send.

Calculation

```
AGGR(Card, icmpOutMsgs)
```

icmpOutParmProbs

Number of ICMP Parameter Problem messages sent.

Calculation

```
AGGR(Card, icmpOutParmProbs)
```

icmpOutRedirects

nr of ICMP Redirect messages sent. For a host this object will always be zero

Calculation

```
AGGR(Card, icmpOutRedirects)
```

icmpOutTimeExcds

Number of ICMP Time Exceeded messages sent.

Calculation

```
AGGR(Card, icmpOutTimeExcds)
```

ipForwardingTableEntries

The total number of Forwarding table entries.

Calculation

```
AGGR (Card, ipForwardingTableEntries)
```

ipForwDatagrams

Nr of input datagrams for which this entity was not their final IP destination

Calculation

```
AGGR(Card, ipForwDatagrams)
```

ipForwDatagramsRate

IP Forwarding Datagram Rate shows the ratio of input datagrams forwarded to total IP datagrams.capability of the routing.

Calculation

```
( jnxipForwDatagrams * 100.0 ) / ( 1.0 * vsum(jnxipForwDatagrams, jnxipIn-
Delivers, jnxipInAddrErrors, jnxipInDiscards, jnxipInHdrErrors, jnxipInUn-
knownProtos) )
```

ipFragCreates

nr of IP datagram fragm that have been generated as result of fragm at entity.

Calculation

```
AGGR(Card, ipFragCreates)
```

ipFragFails

Nr of IP datagrams that have been disca because needs to be fragme at entity

Calculation

```
AGGR(Card, ipFragFails)
```

ipFragFailsRate

IP Fragmentation Failure Rate shows the ratio of IP datagrams that have been discarded because they needed to be fragmented at this entity.

Calculation

```
( jnxipFragFails * 100.0 ) / ( 1.0 * vsum( jnxipFragCreates, jnxipFragFails
) )
```

ipFragOKs

Number of IP datagrams that have been fragmented at this entity.

Calculation

```
AGGR(Card, ipFragOKs)
```

ipInAddrErrors

Nr of input datagram disc bec the IP adr in their IP destinat field not valid

Calculation

```
AGGR(Card, ipInAddrErrors)
```

ipInAddrErrorsRate

IP address error rate shows the ratio number of input datagrams discarded and total IP Packets.

Calculation

```
( jnxipInAddrErrors * 100.0 )/ ( 1.0 * vsum(jnxipForwDatagrams, jnxipInDel-
ivers, jnxipInAddrErrors, jnxipInDiscards, jnxipInHdrErrors, jnxipInUn-
knownProtos) )
```

ipInDeliversRate

IP Successful Delivery Rate shows the ratio of successful datagrams delivered to IP user-protocols, to total incoming datagrams.

Calculation

```
( jnxipInDelivers * 100.0 ) / ( 1.0 * vsum (jnxipForwDatagrams, jnxipInDel-
ivers, jnxipInAddrErrors, jnxipInDiscards, jnxipInHdrErrors, jnxipInUn-
knownProtos) )
```

ipInDiscardsRate

Ip Discard Rate shows the ratio of input IP datagrams for which no problems were encountered to prevent their continued processing, but which were discarded.

Calculation

```
( jnxipInDiscards * 100.0 ) / ( 1.0 * vsum(jnxipForwDatagrams, jnxipInDel-
ivers, jnxipInAddrErrors, jnxipInDiscards, jnxipInHdrErrors, jnxipInUn-
knownProtos) )
```

ipInHdrErrors

Nr of input datagrams discarded due to errors in their IP headers

Calculation

```
AGGR(Card, ipInHdrErrors)
```

ipInHdrErrorsRate

Ip Header Error Rate shows the ratio of input datagrams discarded due to errors in their IP headers.

Calculation

```
( jnxipInHdrErrors * 100.0 ) / ( 1.0 * vsum(jnxipForwDatagrams, jnxipInDel-
ivers, jnxipInAddrErrors, jnxipInDiscards, jnxipInHdrErrors, jnxipInUn-
knownProtos) )
```

ipInReceives

Total nr of input datagrams rec from interfaces, including those rec in error

Calculation

```
AGGR(Card, ipInReceives)
```

ipOutDiscardsRate

IP Discard Rate is the ratio of output IP datagrams Discarded to total number of output datagrams.

Calculation

```
( jnxipOutDiscards * 100.0 ) / ( 1.0 * vsum ( jnxipOutDiscards, jnxipOutRe-
quests, jnxipOutNoRoutes ) )
```

ipOutNoRoutes

Nr IP datagrams disc because no route could be found to transmit them to dest

Calculation

```
AGGR(Card, ipOutNoRoutes)
```

ipReasmFails

Nr of fail detect by the IP re-assembly algorithm for reason timed out errors

Calculation

```
AGGR(Card, ipReasmFails)
```

ipReasmFailsRate

IP Datagram Segmentation Failure Rate shows the ratio of failures detected by the IP re-assembly algorithm (for whatever reason: timed out, errors, etc) to total IP Datagrams that needs fragmentation.

Calculation

```
( jnxipReasmFails * 100.0 ) / ( 1.0 * vsum( jnxipReasmFails, jnxipReasm-
Reqds) )
```

ipReasmOKs

Number of IP datagrams successfully re-assembled.

Calculation

```
AGGR(Card, ipReasmOKs)
```

ipReasmReqds

Number IP fragments received which needed to be reassembled at this entity.

Calculation

```
AGGR(Card, ipReasmReqds)
```

ipsecIncorrectPackets

Nr of packets not processed

Calculation

```
AGGR(Card, ipsecIncorrectPackets)
```

ipsecIssIllegalSpi

Number of incoming packets which spi does not have an SA in IPSEC SAD.

Calculation

```
AGGR(Card, ipsecIssIllegalSpi)
```

ipsecIssInOkPackets

Number of packets which has been processed correctly, coming in.

Calculation

```
AGGR(Card, ipsecIssInOkPackets)
```

ipsecIssMd5Mismatch

Nr of times the comparison between the given value and the calculated

Calculation

```
AGGR(Card, ipsecIssMd5Mismatch)
```

ipsecIssOutOkPackets

Number of packets which has been processed correctly, going out.

Calculation

```
AGGR(Card, ipsecIssOutOkPackets)
```

ipsecIssSha1Mismatch

Nr of times the comparison between the given value and the calc

Calculation

```
AGGR(Card, ipsecIssSha1Mismatch)
```

ipsecWaPacketsProcessed

This count only used as a random for the funct that drops packet high CPU load

Calculation

```
AGGR(Card, ipsecWaPacketsProcessed)
```

MMAttGprsAttachU

Attempted GPRS attach procedures initiated in this SGSN area

Calculation

```
AGGR(RA_GSN, MMAttGprsAttachU)
```

MMAttGprsDetachMsU

Number of attempted GPRS detach procedures initiated by MS in this SGSN area

Calculation

```
AGGR(RA_GSN, MMAttGprsDetachMsU)
```

MMAttGprsDetachSgsnU

Number of attempted GPRS detach procedures initiated by SGSN

Calculation

```
AGGR(RA_GSN, MMAttGprsDetachSgsnU)
```

MMAttInterSgsnRaUpdateU

No of att inter-SGSN Routing Area Update procedures initiated in this SGSN area

Calculation

```
AGGR(RA_GSN, MMAttInterSgsnRaUpdateU)
```

MMAttIntraSgsnRaUpdateU

Attempted intra-SGSN Routing Area Update procedures initiated in this SGSN area

Calculation

```
AGGR(RA_GSN,  MMAttIntraSgsnRaUpdateU)
```

MMNbrActAttachedSubG

Number of attached subscriber within this SGSN area.

Calculation

```
nbrOfAttachedSub
```

MMSuccInterSgsnRaUpdateU

No of succ comp inter-SGSN Routing Area Update Proc initiated in this SGSN area

Calculation

```
AGGR(RA_GSN, MMSuccInterSgsnRaUpdateU)
```

MMUnsuccAttachCC14G

Number of unsuccessful GPRS attach requests, where the Cause code in the Attach Reject is Cause Code #14

Calculation

```
gprsMmSgsnUnsuccAttachRequestsCC14
```

MMUnsuccAttachCC8G

Number of unsuccessful Combined GPRS/IMSI attach, where the Cause code in the Attach Reject is Cause Code #8

Calculation

```
gprsMmSgsnUnsuccessfulAttachRequestsCC8
```

NUMDAYS

of days in Report

Calculation

```
DAYSINREPORT()
```

NUMHOURS

of hours in Summation Data

Calculation

ospfExternLsaCount

Nr of external (LS type 5) link-state advertisements in the link-state database

Calculation

```
AGGR(Card, ospfExternLsaCount)
```

ospfOriginateNewLsas

Nr of new link-state advertisements (LSA) that have been originated

Calculation

```
AGGR(Card, ospfOriginateNewLsas)
```

ospfRxNewLsas

Nr of link-state advertisements received determined to be new instantiations.

Calculation

```
AGGR(Card, ospfRxNewLsas_R21)
```

Payload_DL_SGSN

SGSN payload traffic in downlink measured on the Iu interface (MB)

Calculation

```
S_PayloadgtpuOutDataOctIu / (1024.0 * 1024)
```

Payload_UL_SGSN

SGSN payload traffic in uplink measured on the Iu interface (MB)

Calculation

```
S_PayloadgtpuInDataOctIu / (1024.0 * 1024)
```

pdropPackRatedownAllSGSN

Total Average Packet Success Rate of overall Packets send from this GGSN to all SGSNs connected to it.

Calculation

```
AGGR( SGSN_GGSN, protect(vsum(100, -1 * pSGSN_GGSNdropPackRatedown)) )
```

pdropPackRateupAllSGSN

Total Average Packet Success Rate of overall Packets received in this GGSN from all SGSNs connected to it.

Calculation

```
AGGR( SGSN_GGSN, protect(vsum(100, -1 * pSGSN_GGSNdropPackRateup)) )
```

pGGSNPacketSuccessRate

GGSN Packet Success Rate is the Success Factor of the overall Packets sent to and Received from an Speciefic GGSN. Each success factor is weighted by the is weighted by percentage of total packets in either uplink or downlink direction

Calculation

```
((1- vsum( jnxggsnUplinkDrops *  jnxggsnUplinkPackets, jnxggsnDownlinkDrops
*  jnxggsnDownlinkPackets) ) * 100.0) / (1.0 * vsum(jnxggsnUplinkPackets,
jnxggsnDownlinkPackets ) )
```

pGprsAttchFail

Attach failure rate has a close connection to GPRS service accessibility of SGSN

Calculation

```
(vsum(gprsMmSgsnUnsuccessfulAttachRequests, attGprsAttach, attCombiAttach,
attImsiAttach, -1.0* succGprsAttach, -1 * succCombiAttach, -1 * succImsiAt-
tach) * 100.0 ) / (1.0 *  vsum( gprsMmSgsnAttachRequests, attGprsAttach,
attCombiAttach, attImsiAttach ))
```

pGTPaveragePacketSizeUpLink

Average packet size is the ratio between bytes send and number of packets in uplink

Calculation

```
(ggsnGtpUplinkBytes * 1.0) /( 1.0 * ggsnGtpUplinkPackets)
```

pGTPaverPackSizeDownlinkGGSN

Average packet size is the ratio between bytes send and number of packets in downlink

Calculation

```
( ggsnGtpDownlinkBytes * 1.0) / ( 1.0 * ggsnGtpDownlinkPackets)
```

pGTPpacketDropRateDownlink

GTP Packet Drop Rate is the ratio between dropped packets and sent packets in Downlink direction in the GGSN

Calculation

```
(jnxggsnDownlinkDrops * 100.0) / (1.0 * jnxggsnDownlinkPackets)
```

pGTPpacketDropRateUpLink

GTP Packet Drop Rate is the ratio between dropped packets and sent packets in Uplink direction in the GGSN

Calculation

```
(jnxggsnUplinkDrops * 100) / (1.0 * ggsnGtpUplinkPackets)
```

pInterSgsnRoutUpdFailpSgsn

Inter SGSN Routing area update failure rate has a close connection with the Quality of GPRS Mobility management between different Routing Areas

Calculation

```
(vsum(gprsMmSgsnUnsuccInterRoutingAreaUpdReq, attInterSgsnRaUpdate, -1.0 *
succInterSgsnRaUpdate, 0) * 100.0) / (1.0 * vsum(gprsMmSgsnInterRoutin-
gAreaUpdateRequests, attInterSgsnRaUpdate))
```

pIntraSgsnRoutUpdFailpSgsn

Intra SGSN Routing area update failure rate has a close connection with the Quality of GPRS Mobility management in a Routing Area

Calculation

```
(vsum(gprsMmSgsnUnsuccIntraRoutingAreaUpdReq, attIntraSgsnRaUpdate, -1.0 *
succIntraSgsnRaUpdate, 0) * 100.0) / (1.0 * vsum(gprsMmSgsnIntraRoutin-
gAreaUpdateRequests, attIntraSgsnRaUpdate))
```

pPagingFailpSgsn

Paging Failure Rate is an indication of SGSN and downlink accessibility

Calculation

```
gprsMmUnsuccessfulPagingProcedures * 100.0 / 1.0 * vsum(gprsMmSgsnSuccess-
fulPagingProcedures, gprsMmUnsuccessfulPagingProcedures)
```

pPdpActReFailpGGSN

The ratio between the number of Attempt PDP context activation minus completed PDP context Activation divided by Attempt PDP context Activation Received at the GGSN in percent

Calculation

```
(vsum( ggsnAttemptedActivation, -1 * ggsnCompletedActivation ) * 100.0) /
(1.0 * ggsnAttemptedActivation)
```

pPdpContextEstabFailpGGSN

PDP context establishment failure rate has a close connection of GPRS Core network accessibility of GGSN

Calculation

```
gprsSmGgsnUnsuccessfulPdpCreations * 100.0 / vsum(gprsSmGgsnSuccessfulPdp-
Creations, gprsSmGgsnUnsuccessfulPdpCreations)
```

pPdpContextEstabFailpSGSN

PDP context establishment failure rate has a close connection of GPRS Core network accessibility of SGSN

Calculation

```
vsum(gprsSmSgsnUnsuccessfulActivations, attActPdpContextMSPerSgsn, -1.0 *
succActPdpContextMSPerSgsn, 0) * 100.0 / 1.0 * vsum(gprsSmSgsnSuccessfulAc-
tivations, gprsSmSgsnUnsuccessfulActivations, attActPdpContextMSPerSgsn )
```

pPdpContextModFailpSGSN

PDP context modification failure rate has a close connection of GPRS Core network accessibility and QOS of SGSN delivered

Calculation

```
gprsSmSgsnUnsuccessfulModifications * 100.0 / vsum(gprsSmSgsnSuccessfulMod-
ifications, gprsSmSgsnUnsuccessfulModifications,0.0)
```

pPdpContextUpdFailpGGSN

PDP context modification failure rate has a close connection of GPRS Core network accessibility and QOS of GGSN delivered

Calculation

```
gprsSmGgsnUnsuccessfulPdpUpdatings * 100.0 / vsum(gprsSmGgsnSuccessfulPdp-
Updatings, gprsSmGgsnUnsuccessfulPdpUpdatings,0.0)
```

pPdpDeActReFailpGGSN

The ratio between the number of PDP attempt deactivation minus the number of PDP completed deactivate divided by PDP attempt deactivation in percent

Calculation

```
(vsum(ggsnAttemptedDeactivation, -1 * ggsnCompletedDeactivation ) * 100.0)
/ ( 1.0 * ggsnAttemptedDeactivation)
```

pPdpSelfDeActReFailpGGSN

The ratio between the number of PDP attempt Self deactivations minus the number of PDP completed Self deactivations divided by PDP attempted Self deactivations received at the GGSN in percent

Calculation

```
(vsum(ggsnAttemptedSelfDeactivation, -1 * ggsnCompletedSelfDeactivation ) *
100.0) / ( 1.0 * ggsnAttemptedSelfDeactivation)
```

pPdpSessionManReFailpGGSN

PDP Context Session Management Failure rate is an aggregated Key Quality indicator of the total Session Management failure statistic Received per GGSN

Calculation

```
(vsum( pPdpActReFailpGGSN, pPdpUpdReFailpGGSN, pPdpDeActReFailpGGSN, pPdp-
SelfDeActReFailpGGSN ) * 1.0) / (4 * 1.0)
```

pPdpUpdReFailpGGSN

The ratio between the number of PDP attempt update minus the number of PDP completed update divided by PDP attempt update received at the GGSN in percent

Calculation

```
(vsum( ggsnAttemptedUpdate, -1 * ggsnCompletedUpdate ) * 100.0) / (1.0 *
ggsnAttemptedUpdate)
```

pSessionManSuccessRateGGSN

PDP Context Session Management Failure rate is an aggregated Key Quality indicator of the total Session Management failure statistic Received per GGSN

Calculation

```
(( 1 - vsum( ggsnAttemptedActivation, ggsnAttemptedUpdate, ggsnAttemptedDe-
activation, ggsnAttemptedSelfDeactivation, -1 * ggsnCompletedActivation, -1
*  ggsnCompletedUpdate,  -1 * ggsnCompletedDeactivation, -1 * ggsnComplet-
edSelfDeactivation ) ) * 100.0)  / (vsum( ggsnAttemptedActivation, ggsnAt-
temptedUpdate, ggsnAttemptedDeactivation, ggsnAttemptedSelfDeactivation ) *
1.0)
```

pTotalAPNpacketSuccessRate

Total APN Packet Success Rate is the Total Average Success Factor of the overal Packets sent to and Received from all APN. Each success factor is weighted by percentage of total packets in either uplink or downlink direction.

Calculation

```
aggr(APN, pAPNpacketSuccessRate )
```

Updated: 2009-07-22

pTotalAPNSuccessRate

Total APN Success Rate shows the Total Average success factor of the Overall Operations of all APN . Each PDP Operation success is weighted by the number of the operation

Calculation

```
aggr(APN, pAPNSuccessRate )
```

SECAttIdentityReqImsiG

The counter is incremented when sending Identity Request to an MS

Calculation

```
attIdentityReq
```

SECAttReqAuthSetsSentToHlrBySGSN

Number of attempted requests for authentication sets, sent to the HLR by SGSN

Calculation

```
attReqAuthSetsSentToHlrBySgsn
```

SECemptyResponsesForAuthSetsFromHlr

Number of empty responses to the request for authentication sets that were sent to the HLR.

Calculation

```
emptyResponsesForAuthSetsFromHlr
```

SECSuccIdentityReqImsiG

Incremented at reception of an Identity Response message with the requested identity for example IMSI and IMEI from the MS.

Calculation

```
succIdentityReq
```

SECSuccReqAuthSetsSentToHlrBySGSN

Number of successful requests for authentication sets that were sent from the HLR to the SGSN.

Calculation

```
succReqAuthSetsHlr
```

SMAttActPdpContextDynG

The counter is incremented for each Activate PDP Context Request (with Empty PDP Address) received on the Gb Interface

Calculation

```
attActPdpContextDynMSPerSgsn
```

SMNbrActivePdpPerSgsnG

Number of mobile subscribers with activated PDP.

Calculation

```
nbrSubsWithActivePdpInSgsn
```

SMNbrActPdpContextG

Total number for the active PDP contexts per SGSN.

Calculation

```
gprsSmSgsnTotalActive
```

SMSuccActPdpContextDynG

Number of successfully completed PDP context activations where a dynamic PDP address is used.

Calculation

```
succActPdpContextDynMsPerSgsn
```

SMSuccActPdpContextG

Number of successfully completed PDP context activations

Calculation

```
succActPdpContextMSPerSgsn
```

SMSuccModPdpContextSgsnG

Unsuccessful PDP context modification per SGSN.

Calculation

```
gprsSmSgsnUnsuccessfulModifications
```

SuccActPdpContextDynRate

Successful dynamic PDP context activation procedures initiated by MS rate

Calculation

```
SMSuccActPdpContextDynU * 100.0 / SMAttActPdpContextDynU
```

SuccActPdpContextRate

Successful PDP context activation procedures initiated by MS rate

Calculation

```
SMSuccActPdpContextU * 100.0 / SMAttActPdpContextU
```

succDeactPdpContextGgsnPerSgsn

Retired fr 5.0.10.0.0. Replaced by SMSuccDeactPdpContextGgsnG. Number of successfully handled PDP context deactivations initiated by the GGSN

Calculation

```
SMSuccDeactPdpContextGgsnG
```

succDeactPdpContextMsPerSgsn

Retired fr 5.0.10.0.0. Replaced by SMSuccDeactPdpContextMsG. This measurement provides the number of successfully completed PDP context deactivations

Calculation

```
SMSuccDeactPdpContextMsG
```

SuccGprsAttachRate

Successful GPRS attach procedures initiated in this SGSN area

Calculation

```
AGGR(RA_GSN, SuccGprsAttachRate)
```

SuccIntraSgsnRaUpdate_Rate

Successful intra-SGSN Routing Area Update Rate procedure initiated in this SGSN area in percent. RA_SGN succIntraSgsnRaUpdate aggregate to GSN entity.

Calculation

```
AGGR(RA_GSN, SuccIntraSgsnRaUpdate)
```

TotalCapGTP_CPICallGGSN

Total capacity of the GTP-C PIC on all GGSNs

Calculation

```
aggr (Card, ggsnGtpcPdpCapacity)
```

UnknownEnterpriseField

Unknown Field exported from Enterprise Server

Calculation

```
nullInt()
```

GSN Peg Counts

The following is a list of peg counts for the GSN entity.

attActPdpContextDynMSPerSgsn

The counter is incremented for each Activate PDP Context Request (with Empty PDP Address) received on the Gb Interface

Data Source

SGSN

Source Field

attActPdpContextDynMSPerSgsn

Source Section

GPRS Session Management

attAuthInSgsn

The counter is incremented when sending Authentication and Ciphering Request to an MS

Data Source

SGSN

Source Field

attAuthInSgsn

Source Section

Security

attCombiAttach

The counter is incremented for each Attach Request indicating Combined GPRS/IMSI Attach received on the Gb Interface

Data Source

SGSN

Source Field

attCombiAttach

Source Section

GPRS Mobility Management

attCombiDetachMs

The counter is incremented for each Detach Request indicating Combined GPRS/IMSI Detach received on the Gb Interface

Data Source

SGSN

Source Field

attCombiDetachMs

Source Section

GPRS Mobility Management

attGprsAttach

The counter is incremented for each Attach Request indicating GPRS Only Attach received on the Gb Interface

Data Source

SGSN

Source Field

attGprsAttach

Source Section

GPRS Mobility Management

attGprsAttachUmts

The number of attempted GPRS attach procedures initiated within this SGSN area. Resending from MSs are also counted.

Data Source

SGSN

Source Field

attGprsAttachUmts

Source Section

Mobility Management

attGprsAttachVisitor

This measurement provides the number of attempted GPRS attach procedures, within this SGSN area, initiated by visiting GPRS subscribers . Visiting subscribers are defined by the roaming status parameter in the IMSI number series configuration. Resendings from MSs are not counted.

Data Source

SGSN

Source Field

attGprsAttachVisitor

Source Section

Mobility Management

attGprsDetachMs

The counter is incremented for each Detach Request indicating GPRS Detach received on the Gb Interface

Data Source

SGSN

Source Field

attGprsDetachMs

Source Section

GPRS Mobility Management

attGprsDetachMsUmts

The number of attempted GPRS detach procedures.

Data Source

SGSN

Source Field

attGprsDetachMsUmts

Source Section

Mobility Management

attGprsDetachSgsn

The counter is incremented when sending Detach Request to an MS

Data Source

SGSN

Source Field

attGprsDetachSgsn

Source Section

GPRS Mobility Management

attGprsDetachSgsnUmts

The number of attempted GPRS detach procedures initiated by the SGSN.

Data Source

SGSN

Source Field

attGprsDetachSgsnUmts

Source Section

Mobility Management

attIdentityReq

The counter is incremented when sending Identity Request to an MS

Data Source

SGSN

Source Field

attIdentityReq

Source Section

Security

attImsiAttach

The counter is incremented for each Attach Request indicating GPRS Attach while IMSI Attached received on the Gb Interface

Data Source

SGSN

Source Field

attImsiAttach

Source Section

GPRS Mobility Management

attImsiDetachMS

The counter is incremented for each Detach Request indicating IMSI Detach received on the Gb Interface

Data Source

SGSN

Source Field

attImsiDetachMS

Source Section

GPRS Mobility Management

attInterSgsnRaUpdate

The counter is incremented for each RA Update Request (where old RA is served by a cooperating SGSN) received on the Gb Interface

Data Source

SGSN

Source Field

attInterSgsnRaUpdate

Source Section

GPRS Mobility Management

attInterSgsnRaUpdateUmts

The number of attempted inter-SGSN RA update procedures.

Data Source

SGSN

Source Field

attInterSgsnRaUpdateUmts

Source Section

Mobility Management

attInterSgsnRaUpdateVisitor

This measurement provides the number of attempted inter-SGSN RAU procedures initiated by visiting GPRS subscribers within this SGSN, where the old RA is served by another SGSN. Visiting subscribers are defined by the roaming status parameter in the IMSI number series configuration. Resendings from MSs are not counted.

Data Source

SGSN

Source Field

attInterSgsnRaUpdateVisitor

Source Section

Mobility Management

attIntraSgsnRaUpdate

The counter is incremented for each RA Update Request (where old and new RA are served by this SGSN) received on the Gb Interface

Data Source

SGSN

Source Field

attIntraSgsnRaUpdate

Source Section

GPRS Mobility Management

attIntraSgsnRaUpdateUmts

The number of attempted intra-SGSN RA update procedures.

Data Source

SGSN

Source Field

attIntraSgsnRaUpdateUmts

Source Section

Mobility Management

attPacketSwitchingPaging

Number of attempted packet switched paging procedures, for GPRS services, within this SGSN area

Data Source

SGSN

Source Field

attPacketSwitchingPaging

Source Section

Radio Resource Management

attPacketSwitchingPagingUmts

The number of attempted PS paging procedures.

Data Source

SGSN

Source Field

attPacketSwitchingPagingUmts

Source Section

Mobility Management

attReqAuthSetsSentToHlrBySgsn

Number of attempted requests for authentication sets, sent to the HLR by SGSN

Data Source

SGSN

Source Field

attReqAuthSetsSentToHlrBySgsn

Source Section

Security

bssgpAttResumeProc

The number of attempted BSS GPRS Protocol (BSSGP) resume procedures.

Data Source

SGSN

Source Field

bssgpAttResumeProc

Source Section

BSSGP

bssgpAttSuspendProc

The total number of downlink BSSGP suspend procedures

Data Source

SGSN

Source Field

bssgpAttSuspendProc

Source Section

BSSGP

bssgpDLPacketsDscMobileSuspend

This measurement provides the number of discarded IP packets due to suspended mobile. This counter is increased when it is the MS that has suspended GPRS.

Data Source

SGSN

Source Field

bssgpDownlinkPacketsDiscardedMobileSuspend

Source Section

BSSGP

bssgpDownlinkPacketsBuff

This measurement provides the total number of IP packets buffered. It is updated when downlink payload is buffered.

Data Source

SGSN

Source Field

bssgpDownlinkPacketsBuff

Source Section

BSSGP

bssgpDownlinkPacketsBuffBucketFull

This measurement provides the total number of IP packets being buffered due to flow control. This counter is increased when buffering IP packets and either the BSS Cell bucket is full, the BSS MS bucket is full or when the BSS PFC bucket is full.

Data Source

SGSN

Source Field

bssgpDownlinkPacketsBuffBucketFull

Source Section

BSSGP

bssgpDownlinkPacketsBuffLlcSuspend

This measurement provides the number of IP packets buffered due to suspended Logical Link Control (LLC) between MS and SGSN.

Data Source

SGSN

Source Field

bssgpDownlinkPacketsBuffLlcSuspend

Source Section

BSSGP

bssgpDownlinkPacketsBuffMobileSuspend

This counter will be increased when buffering packets and the last reason for delay was the MS that has suspended GPRS.

Data Source

SGSN

Source Field

bssgpDownlinkPacketsBuffMobileSuspend

Source Section

BSSGP

bssgpDownlinkPacketsBuffSnapshot

This measurement is a snapshot of the number of IP packets currently being buffered. It is increased when bssgp.DownlinkPacketsBuff is stepped and decreased when a packet is removed from the buffer regardless if the packet is sent or discarded.

Data Source

SGSN

Source Field

bssgpDownlinkPacketsBuffSnapshot

Source Section

BSSGP

bssgpDownlinkPacketsDiscardedBucketFull

This measurement provides the total number of discarded IP packets due to Bucket Full. The counter is increased when either the BSS Cell bucket is full, the BSS MS bucket is full or the BSS PFC bucket is full.

Data Source

SGSN

Source Field

bssgpDownlinkPacketsDiscardedBucketFull

Source Section

BSSGP

bssgpDownlinkPacketsDiscardedBvcBlocked

This measurement provides the number of discarded packets due to blocked BVCs. The counter is increased when a packet is discarded and the BSS has blocked a cell.

Data Source

SGSN

Source Field

bssgpDownlinkPacketsDiscardedBvcBlocked

Source Section

BSSGP

bssgpDownlinkPacketsDiscardLlcSuspended

This measurement provides the number of Internet Protocol (IP) packets discarded due to suspended LLC between Mobile Station (MS) and Serving GPRS Support Node (SGSN).

Data Source

SGSN

Source Field

bssgpDownlinkPacketsDiscardLlcSuspended

Source Section

BSSGP

CAMAttCamelDialogues

The total number of CAMEL dialogue attempts in GPRS.

Data Source

SGSN

Source Field

CAM.AttCamelDialogues.G

Source Section

CAMEL

CAMAttCamelDialoguesU

The total number of CAMEL dialogue attempts in UMTS.

Data Source

SGSN

Source Field

CAM.AttCamelDialogues.U

Source Section

CAMEL

CAMFailDialoguesScf

The number of failed CAMEL dialogues in GPRS, error or reject from gsm SCF. The CAM.FailDialoguesScf counter is split into G and W counters.

Data Source

SGSN

Source Field

CAM.FailDialoguesScf.G

Source Section

CAMEL

CAMFailDialoguesScfU

The number of failed CAMEL dialogues, error or reject from gsm SCF.The CAM.FailDialoguesScf counter is split into G and W counters.

Data Source

SGSN

Source Field

CAM.FailDialoguesScf.U

Source Section

CAMEL

CAMFailDialoguesSsf

The number of failed CAMEL dialogues in GPRS, aborted locally by gprsSSF.The CAM.FailDialoguesSsf counter is split into G and W counters.

Data Source

SGSN

Source Field

CAM.FailDialoguesSsf.G

Source Section

CAMEL

CAMFailDialoguesSsfU

The number of failed CAMEL dialogues, aborted locally by gprsSSF.The CAM.FailDialoguesSsf counter is split into G and W counters.

Data Source

SGSN

Source Field

CAM.FailDialoguesSsf.U

Source Section

CAMEL

collectionPeriod

Period length of collection in seconds

Data Source

SGSN

collectionPeriod_GGSN

Period Length

Data Source

SGSN

Source Field

collectionPeriod_GGSN

Source Section

GSN General

collectionPeriod_SNMP_GGSN

Period Length

Data Source

GGSN

Source Field

collectionPeriod_SNMP_GGSN

Source Section

GGSN General

discardedAttachMsError

The discardedAttachMsError counter is incremented when there is a rejected attach because the MS has wrong Temporary Logical Link Identity (TLLI). There is an IMSI attach on non-random TLLI.

Data Source

SGSN

Source Field

discardedAttachMsError

Source Section

Mobility Management

discardedCombiAttach

The number of discarded combined GPRS/IMSI attach requests on the DP level due to overload protection or incorrect information elements.

Data Source

SGSN

Source Field

discardedCombiAttach

Source Section

Mobility Management

discardedCombiRaUpdate

The number of discarded combined GPRS/IMSI RA update requests on the DP level due to overload protection or incorrect information elements.

Data Source

SGSN

Source Field

discardedCombiRaUpdate

Source Section

Mobility Management

discardedDetach

The number of discarded detach requests on the DP level due to overload protection or incorrect information elements.

Data Source

SGSN

Source Field

discardedDetach

Source Section

Mobility Management

discardedGprsAttach

The number of discarded GPRS attach requests on the Device Processor (DP) level due to overload protection or incorrect information elements.

Data Source

SGSN

Source Field

discardedGprsAttach

Source Section

Mobility Management

discardedPayloadPacket

The number of discarded payload packets on the DP level due to overload or incorrect information elements.

Data Source

SGSN

Source Field

discardedPayloadPacket

Source Section

Session Management

discardedRaUpdate

The number of discarded RA update requests on the DP level due to overload protection or incorrect information elements.

Data Source

SGSN

Source Field

discardedRaUpdate

Source Section

Mobility Management

DiscardedSccpConnectInd

The counter is incremented when a SCCP Connect Indication message is discarded

Data Source

SGSN

discardedSessionMgmnt

The number of discarded session management messages on the DP level due to overload or incorrect information elements.

Data Source

SGSN

Source Field

discardedSessionMgmnt

Source Section

Session Management

downlinkSndcpNpduSent

The number of outgoing N-PDUs sent by the SNDCP protocol layer.

Data Source

SGSN

Source Field

downlinkSndcpNpduSent

Source Section

SNDCP

downlinkSndcpOctetSent

The number of octets in outgoing N-PDUs sent by the SNDCP protocol layer (kOctets, 1024 octets)

Data Source

SGSN

Source Field

downlinkSndcpOctetSent

Source Section

SNDCP

emptyResponsesForAuthSetsFromHlr

Number of empty responses to the request for authentication sets that were sent to the HLR.

Data Source

SGSN

Source Field

emptyResponsesForAuthSetsFromHlr

Source Section

Security

errLlcFramesDetectedBySgsn

The number of erroneously received LLC frames in case of error detection in the SGSN.

Data Source

SGSN

Source Field

errLlcFramesDetectedBySgsn

Source Section

LLC

ggsn_auth_failed

Results Authentication failed Collected using CLI

Data Source

SGSN

Source Field

ResultsAuthenticationfailed

Source Section

ggsnstatisticsgtp

ggsn_ctrl_pkt_drops

Control packets dropped Collected using CLI

Data Source

SGSN

Source Field

GTPstatisticsControlpacketsdropped

Source Section

ggsnstatisticsgtp

ggsn_da_unavail

Results Dynamic addresses unavailable Collected using CLI

Data Source

SGSN

Source Field

ResultsDynamicaddressesunavailable

Source Section

ggsnstatisticsgtp

ggsn_Dlink_Bytes

Downlink traffic Packets Collected using CLI

Data Source

SGSN

Source Field

DownlinktrafficBytes

Source Section

ggsnstatistics

ggsn_Dlink_Drops

Downlink traffic Bytes Collected using CLI

Data Source

SGSN

Source Field

DownlinktrafficDroppedpackets

Source Section

ggsnstatistics

ggsn_Dlink_Packets

Downlink traffic Dropped Packets Collected using CLI

Data Source

SGSN

Source Field

DownlinktrafficPackets

Source Section

ggsnstatistics

ggsn_err_ind_recvd

Results Error indications received Collected using CLI

Data Source

SGSN

Source Field

ResultsErrorindicationsreceived

Source Section

ggsnstatisticsgtp

ggsn_err_ind_trans

Results Error indications transmitted Collected using CLI

Data Source

SGSN

Source Field

ResultsErrorindicationstransmitted

Source Section

ggsnstatisticsgtp

ggsn_invalid_req_format

Results Invalid request format Collected using CLI

Data Source

SGSN

Source Field

ResultsInvalidrequestformat

Source Section

ggsnstatisticsgtp

ggsn_mem_unavail

Results No memory available Collected using CLI

Data Source

SGSN

Source Field

ResultsNomemoryavailable

Source Section

ggsnstatisticsgtp

ggsn_mndt_ie_invalid

Results Mandatory IE invalid Collected using CLI

Data Source

SGSN

Source Field

ResultsMandatoryIEinvalid

Source Section

ggsnstatisticsgtp

ggsn_mndt_ie_missing

Results Mandatory IE missing Collected using CLI

Data Source

SGSN

Source Field

ResultsMandatoryIEmissing

Source Section

ggsnstatisticsgtp

ggsn_opt_ie_invalid

Results Optional IE invalid Collected using CLI

Data Source

SGSN

Source Field

ResultsOptionalIEinvalid

Source Section

ggsnstatisticsgtp

ggsn_pdp_cr_resp_trans

Number of (GTP Message) PDP Create Responses transmitted from the GGSN Collected using CLI.

Data Source

SGSN

Source Field

PDPContextsGGSNPDPcreateresponsestransmitted

Source Section

ggsnstatisticsgtp

ggsn_pdp_creation_failed

PDP creations Failed Collected using CLI

Data Source

SGSN

Source Field

Failedcreations

Source Section

ggsnstatistics

ggsn_pdp_deact_failed

PDP deactivations Failed Collected using CLI

Data Source

SGSN

Source Field

Faileddeactivations

Source Section

ggsnstatistics

ggsn_pdp_del_idle_sv

PDP deletions by idle-supervision Collected using CLI

Data Source

SGSN

Source Field

PDPdeletionsbyidle-supervision

Source Section

ggsnstatistics

ggsn_pdp_del_req_trans

Number of (GTP Message) PDP Delete Requests transmitted from the GGSN Collected using CLI.

Data Source

SGSN

Source Field

PDPContextsGGSNPDPdeleterequeststransmitted

Source Section

ggsnstatisticsgtp

ggsn_pdp_del_res_recvd

PDP Contexts: PDP delete responses received Collected using CLI

Data Source

SGSN

Source Field

PDPContextsPDPdeleteresponsesreceived

Source Section

ggsnstatisticsgtp

ggsn_pdp_del_res_trans

PDP Contexts: PDP delete responses transmitted Collected using CLI

Data Source

SGSN

Source Field

PDPContextsPDPdeleteresponsestransmitted

Source Section

ggsnstatisticsgtp

ggsn_pdp_del_user_cmd

PDP deletions by user command Collected using CLI

Data Source

SGSN

Source Field

PDPdeletionsbyusercommand

Source Section

ggsnstatistics

ggsn_pdp_upd_req_recvd

Number of (GTP Message) PDP Update Requests received in the GGSN Collected using CLI.

Data Source

SGSN

Source Field

PDPContextsPDPupdaterequestsreceived

Source Section

ggsnstatisticsgtp

ggsn_pdp_upd_req_trans

Number of (GTP Message) PDP Update Requests transmitted from the GGSN Collected using CLI.

Data Source

SGSN

Source Field

PDPContextsPDPupdaterequeststransmitted

Source Section

ggsnstatisticsgtp

ggsn_pdp_upd_res_recvd

Number of (GTP Message) PDP Update Responses received in the GGSN Collected using CLI.

Data Source

SGSN

Source Field

PDPContextsPDPupdateresponsesreceived

Source Section

ggsnstatisticsgtp

ggsn_pdp_upd_res_trans

Number of (GTP Message) PDP Update Responses transmitted from the GGSN Collected using CLI.

Data Source

SGSN

Source Field

PDPContextsPDPupdateresponsestransmitted

Source Section

ggsnstatisticsgtp

ggsn_pdp_update_failed

PDP updates Failed Collected using CLI

Data Source

SGSN

Source Field

Failedupdates

Source Section

ggsnstatistics

ggsn_Pkt_filter_semantic_err

Results Packet filtering semantic error Collected using CLI

Data Source

SGSN

Source Field

ResultsPacketfilteringsemanticerror

Source Section

ggsnstatisticsgtp

ggsn_Pkt_filter_syntax_err

Results Packet filtering syntax error Collected using CLI

Data Source

SGSN

Source Field

ResultsPacketfilteringsyntaxerror

Source Section

ggsnstatisticsgtp

ggsn_ref_notexist

Results Reference does not exist Collected using CLI

Data Source

SGSN

Source Field

ResultsReferencedoesnotexist

Source Section

ggsnstatisticsgtp

ggsn_req_accpt

Results Request accepted Collected using CLI

Data Source

SGSN

Source Field

ResultsRequestaccepted

Source Section

ggsnstatisticsgtp

ggsn_req_received

Number of (GTP Message) Echo Requests received in the GGSN Collected using CLI.

Data Source

SGSN

Source Field

MessagesEchorequestsreceived

Source Section

ggsnstatisticsgtp

ggsn_req_transmitted

Number of (GTP Message) Echo Requests transmitted from the GGSN Collected using CLI.

Data Source

SGSN

Source Field

MessagesEchorequestsTransmitted

Source Section

ggsnstatisticsgtp

ggsn_res_not_avail

Results Resources not available Collected using CLI

Data Source

SGSN

Source Field

ResultsResourcesnotavailable

Source Section

ggsnstatisticsgtp

ggsn_res_received

Number of (GTP Message) Echo Responses received in the GGSN Collected using CLI.

Data Source

SGSN

Source Field

MessagesEchoresponsesreceived

Source Section

ggsnstatisticsgtp

ggsn_res_transmitted

Number of (GTP Message) Echo Responses transmitted from the GGSN Collected using CLI.

Data Source

SGSN

Source Field

MessagesEchoresponsesTransmitted

Source Section

ggsnstatisticsgtp

ggsn_serv_unsupported

Results Service is unsupported Collected using CLI

Data Source

SGSN

Source Field

ResultsServiceisunsupported

Source Section

ggsnstatisticsgtp

ggsn_sgsn_pdp_cr_req_recvd

Number of (GTP Message) PDP Create Requests received in the GGSN Collected using CLI.

Data Source

SGSN

Source Field

PDPContextsSGSNPDPcreaterequestsreceived

Source Section

ggsnstatisticsgtp

ggsn_sgsn_pdp_del_req_recvd

Number of (GTP Message) PDP Delete Requests received in the GGSN Collected using CLI.

Data Source

SGSN

Source Field

PDPContextsSGSNPDPdeleterequestsreceived

Source Section

ggsnstatisticsgtp

ggsn_sys_failed

Results System failure Collected using CLI

Data Source

SGSN

Source Field

ResultsSystemfailure

Source Section

ggsnstatisticsgtp

ggsn_tft_semantic_err

Results TFT semantic error Collected using CLI

Data Source

SGSN

Source Field

ResultsTFTsemanticerror

Source Section

ggsnstatisticsgtp

ggsn_tft_syntax_err

Results TFT syntax error Collected using CLI

Data Source

SGSN

Source Field

ResultsTFTsyntaxerror

Source Section

ggsnstatisticsgtp

ggsn_unkwn_apn

Results Unknown APN Collected using CLI

Data Source

SGSN

Source Field

ResultsUnknownAPN

Source Section

ggsnstatisticsgtp

ggsn_unkwn_pdp_add_or_type

Results Unknown PDP address or type Collected using CLI

Data Source

SGSN

Source Field

ResultsUnknownPDPaddressortype

Source Section

ggsnstatisticsgtp

ggsn_Uplink_Bytes

Uplink traffic Packets Collected using CLI

Data Source

SGSN

Source Field

UplinktrafficBytes

Source Section

ggsnstatistics

ggsn_Uplink_Drops

Uplink traffic Dropped Bytes Collected Using CLI

Data Source

SGSN

Source Field

UplinktrafficDroppedpackets

Source Section

ggsnstatistics

ggsn_Uplink_Packets

Uplink traffic Dropped packets Collected using CLI

Data Source

SGSN

Source Field

UplinktrafficPackets

Source Section

ggsnstatistics

ggsn_ver_unsupp_received

Number of (GTP Message) Version not supported received in the GGSN Collected using CLI.

Data Source

SGSN

Source Field

MessagesVersionunsupportedpacketsreceived

Source Section

ggsnstatisticsgtp

ggsn_ver_unsupp_transmitted

Number of (GTP Message) Version not supported transmitted from the GGSN Collected using CLI.

Data Source

SGSN

Source Field

MessagesVersionunsupportedpacketsTransmitted

Source Section

ggsnstatisticsgtp

ggsn_ver_unsupported

Results Version unsupported Collected using CLI

Data Source

SGSN

Source Field

ResultsVersionunsupported

Source Section

ggsnstatisticsgtp

ggsnAlarmCriticalNumber

Total number of critical alarms

Data Source

GGSN

Source Field

ggsnAlarmCriticalNumber

Source Section

ggsnAlarmInfo

ggsnAlarmMajorNumber

Total number of major alarms

Data Source

GGSN

Source Field

ggsnAlarmMajorNumber

Source Section

ggsnAlarmInfo

ggsnAlarmMinorNumber

Total number of minor alarms.

Data Source

GGSN

Source Field

ggsnAlarmMinorNumber

Source Section

ggsnAlarmInfo

ggsnAlarmNumber

Total number of active alarms, i.e. total number of entries in the alarm table

Data Source

GGSN

Source Field

ggsnAlarmNumber

Source Section

ggsnAlarmInfo

ggsnAlarmUnknownNumber

Total number of unknown alarms.

Data Source

GGSN

Source Field

ggsnAlarmUnknownNumber

Source Section

ggsnAlarmInfo

ggsnAlarmWarningNumber

Total number of warnings.

Data Source

GGSN

Source Field

ggsnAlarmWarningNumber

Source Section

ggsnAlarmInfo

ggsnAttemptedActivation

The number of PDP context activation procedures initiated by the MS on this GGSN.

Data Source

GGSN

Source Field

ggsnAttemptedActivation

Source Section

ggsnPdpContextsStatsAttempted

ggsnAttemptedActivationIpv6

The number of IPv6 PDP context activation procedures initiated by MS on this GGSN.

Data Source

GGSN

Source Field

ggsnAttemptedActivationIpv6

ggsnAttemptedDeactivation

Total number of attempted PDP context deactivation procedures served by this GGSN Collected using CLI.

Data Source

SGSN

Source Field

PDPdeactivations

Source Section

ggsnstatistics

ggsnAttemptedDeactivation_jn

The number of PDP context deactivation procedures initiated by the MS on this GGSN.

Data Source

GGSN

Source Field

ggsnAttemptedDeactivation

Source Section

ggsnPdpContextsStatsAttempted

ggsnAttemptedSecondaryActivation

The number of secondary PDP context activation procedures initiated by the MS on this GGSN.

Data Source

GGSN

Source Field

ggsnAttemptedSecondaryActivation

ggsnAttemptedSelfDeactivation

The number of PDP context deactivation procedures initiated by this GGSN

Data Source

GGSN

Source Field

ggsnAttemptedSelfDeactivation

Source Section

ggsnPdpContextsStatsAttempted

ggsnAttemptedTimeDeactivation

Total number of a attempted PDP context deactivation procedures served by this GGSN (SNMP DataStream)

Data Source

GGSN

Source Field

ggsnAttemptedTimeDeactivation

Source Section

ggsnPdpContextsStatsAttempted

ggsnAttemptedUpdate

Total number of attempted PDP context update procedures served by this GGSN Collected using CLI.

Data Source

SGSN

Source Field

PDPupdates

Source Section

ggsnstatistics

ggsnAttemptedUpdate_jn

The number of PDP context updates attempted on this GGSN.

Data Source

GGSN

Source Field

ggsnAttemptedUpdate

Source Section

ggsnPdpContextsStatsAttempted

ggsnAttmptManualDeactivation

The number of successfully completed deactivation PDP context procedures initiated by the MS on this GGSN. (SNMP DataStream)

Data Source

GGSN

Source Field

ggsnAttmptManualDeactivation

Source Section

ggsnPdpContextsStatsAttempted

ggsnCompletedActivation

The number of successfully completed activation PDP context procedures initiated by the MS on this GGSN.

Data Source

GGSN

Source Field

ggsnCompletedActivation

Source Section

ggsnPdpContextsStatsCompleted

ggsnCompletedActivationIpv6

The number of successfully completed IPv6 activation PDP contexts procedures initiated by MS on this GGSN

Data Source

GGSN

Source Field

ggsnCompletedActivationIpv6

ggsnCompletedDeactivation

The number of successfully completed deactivation PDP context procedures initiated by the MS on this GGSN.

Data Source

GGSN

Source Field

ggsnCompletedDeactivation

Source Section

ggsnPdpContextsStatsCompleted

ggsnCompletedManualDeactivation

The number of PDP context updates successfully completed on this GGSN. (SNMP DataStream)

Data Source

GGSN

Source Field

ggsnCmpltdManualDeactivation

Source Section

ggsnPdpContextsStatsCompleted

ggsnCompletedSecondaryActivation

The number of successfully completed activation secondary PDP context procedures initiated by the MS on this GGSN.

Data Source

GGSN

Source Field

ggsnCompletedSecondaryActivation

ggsnCompletedSelfDeactivation

The number of successfully completed deactivation PDP context procedures initiated by this GGSN.

Data Source

GGSN

Source Field

ggsnCompletedSelfDeactivation

Source Section

ggsnPdpContextsStatsCompleted

ggsnCompletedTimeDeactivation

The number of successfully completed deactivation PDP context procedures initiated by this GGSN. (SNMP DataStream)

Data Source

GGSN

Source Field

ggsnCompletedTimeDeactivation

Source Section

ggsnPdpContextsStatsCompleted

ggsnCompletedUpdate

The number of PDP context updates successfully completed on this GGSN.

Data Source

GGSN

Source Field

ggsnCompletedUpdate

Source Section

ggsnPdpContextsStatsCompleted

ggsnControlLoad

Weighted PDP context load in control.

Data Source

GGSN

Source Field

ggsnControlLoad

ggsnDownlinkBytesIpv6

The bytes for all processed IPv6 packets in the downlink direction via this GGSN

Data Source

GGSN

Source Field

ggsnDownlinkBytesIpv6

ggsnDownlinkDropsBytes

The total number of downlink bytes dropped by this GGSN (SNMP DataStream)

Data Source

GGSN

Source Field

ggsnDownlinkDropsBytes

Source Section

ggsnDownlinkTrafficInfo

ggsnDownlinkDropsIpv6

The number of dropped IPv6 packets by this GGSN in the downlink direction

Data Source

GGSN

Source Field

ggsnDownlinkDropsIpv6

ggsnDownlinkPacketsIpv6

Total IPv6 downlink packets processed by this GGSN.

Data Source

GGSN

Source Field

ggsnDownlinkPacketsIpv6

ggsnFailedActivation

The number of PDP context updates successfully completed on this GGSN. (SNMP DataStream)

Data Source

GGSN

Source Field

ggsnFailedActivation

Source Section

ggsnPdpContextsStatsFailed

ggsnGtpControlPacketDrops

Control packets dropped (SNMP DataStream)

Data Source

GGSN

Source Field

ggsnGtpControlPacketDrops

Source Section

ggsnGtp

ggsnGtpDownlinkBytes

Number of Downlink GTP-U bytes sent in the GGSN Collected using CLI.

Data Source

SGSN

Source Field

GTPstatisticsDownlinkBytes

Source Section

ggsnstatisticsgtp

ggsnGtpDownlinkBytes_jn

Number of Downlink GTP-U bytes sent in the GGSN. (SNMP DataStream)

Data Source

GGSN

Source Field

ggsnGtpDownlinkBytes

Source Section

ggsnGtp

ggsnGtpDownlinkPackets

Number of Downlink GTP-U packets sent in the GGSN Collected using CLI.

Data Source

SGSN

Source Field

GTPstatisticsDownlinkpackets

Source Section

ggsnstatisticsgtp

ggsnGtpDownlinkPackets_jn

Number of Downlink GTP-U packets sent in the GGSN. (SNMP DataStream)

Data Source

GGSN

Source Field

ggsnGtpDownlinkPackets

Source Section

ggsnGtp

ggsnGtpEchoReqReceived

Number of (GTP Message) Echo Requests received in the GGSN. (SNMP DataStream)

Data Source

GGSN

Source Field

ggsnGtpEchoReqReceived

Source Section

ggsnGtp

ggsnGtpEchoReqSent

Number of (GTP Message) Echo Requests transmitted from the GGSN. (SNMP DataStream)

Data Source

GGSN

Source Field

ggsnGtpEchoReqSent

Source Section

ggsnGtp

ggsnGtpEchoRespReceived

Number of (GTP Message) Echo Responses received in the GGSN. (SNMP DataStream)

Data Source

GGSN

Source Field

ggsnGtpEchoRespReceived

Source Section

ggsnGtp

ggsnGtpEchoRespSent

Number of (GTP Message) Echo Responses transmitted from the GGSN. (SNMP DataStream)

Data Source

GGSN

Source Field

ggsnGtpEchoRespSent

Source Section

ggsnGtp

ggsnGtpErrInvalidReqFormatDel

The number of GTP Invalid delete request format errors sent by the GGSN

Data Source

GGSN

ggsnGtpErrInvalidReqFormatUpd

The number of GTP Invalid update request format errors sent by the GGSN

Data Source

GGSN

ggsnGtpErrMndtryIEInvalidDel

The number of errors sent by the GGSN indicating that a mandatory information element was invalid in delete request

Data Source

GGSN

ggsnGtpErrMndtryIEInvalidUpd

The number of errors sent by the GGSN indicating that a mandatory information element was invalid in update request

Data Source

GGSN

ggsnGtpErrMndtryIEMissingDel

The number of errors sent by the GGSN indicating that a mandatory information element was missing in delete request

Data Source

GGSN

ggsnGtpErrMndtryIEMissingUpd

The number of errors sent by the GGSN indicating that a mandatory information element was missing in update request.

Data Source

GGSN

ggsnGtpErrOptionalIEInvDel

The number of errors sent by this GGSN indicating that an optional information element was invalid in delete request

Data Source

GGSN

ggsnGtpErrOptionalIEInvUpd

The number of errors sent by the GGSN indicating that an optional information element was invalid in update request

Data Source

GGSN

ggsnGtpErrorApnAccessDenied

The number of GTP APN access denied errors with no subscription

Data Source

GGSN

Source Field

ggsnGtpErrorApnAccessDenied

ggsnGtpErrorApnUnknown

Results Unknown APN (SNMP DataStream)

Data Source

GGSN

Source Field

ggsnGtpErrorApnUnknown

Source Section

ggsnGtpErrorStats

ggsnGtpErrorAuthenticationFailed

Results Authentication failed (SNMP DataStream)

Data Source

GGSN

Source Field

ggsnGtpErrAuthenFailed

Source Section

ggsnGtpErrorStats

ggsnGtpErrorDynAddrUnavailable

Results Dynamic addresses unavailable (SNMP DataStream)

Data Source

GGSN

Source Field

ggsnGtpErrDynAddrUnavailable

Source Section

ggsnGtpErrorStats

ggsnGtpErrorIndicationReceived

Results Error indications received (SNMP DataStream)

Data Source

GGSN

Source Field

ggsnGtpErrIndicationReceived

Source Section

ggsnGtpErrorStats

ggsnGtpErrorIndicationSent

Results Error indications transmitted (SNMP DataStream)

Data Source

GGSN

Source Field

ggsnGtpErrorIndicationSent

Source Section

ggsnGtpErrorStats

ggsnGtpErrorInvalidRequestFormat

Results Invalid request format (SNMP DataStream)

Data Source

GGSN

Source Field

ggsnGtpErrInvalidRqstFormat

Source Section

ggsnGtpErrorStats

ggsnGtpErrorMandatoryIEInvalid

Results Mandatory IE invalid (SNMP DataStream)

Data Source

GGSN

Source Field

ggsnGtpErrMandatoryIEInvalid

Source Section

ggsnGtpErrorStats

ggsnGtpErrorMandatoryIEMissing

Results Mandatory IE missing (SNMP DataStream)

Data Source

GGSN

Source Field

ggsnGtpErrMandatoryIEMissing

Source Section

ggsnGtpErrorStats

ggsnGtpErrorMemoryUnAvailable

Results No memory available (SNMP DataStream)

Data Source

GGSN

Source Field

ggsnGtpErrorMemoryUnAvailable

Source Section

ggsnGtpErrorStats

ggsnGtpErrorOptionalIEInvalid

Results Optional IE invalid (SNMP DataStream)

Data Source

GGSN

Source Field

ggsnGtpErrOptionalIEInvalid

Source Section

ggsnGtpErrorStats

ggsnGtpErrorPackFiltSemantError

Results Packet filtering semantic error (SNMP DataStream)

Data Source

GGSN

Source Field

ggsnGtpErrPackFiltSemantError

Source Section

ggsnGtpErrorStats

ggsnGtpErrorPackFiltSyntaxError

Results Packet filtering syntax error (SNMP DataStream)

Data Source

GGSN

Source Field

ggsnGtpErrPackFiltSyntaxError

Source Section

ggsnGtpErrorStats

ggsnGtpErrorPDPAddrUnknown

Results Unknown PDP address or type (SNMP DataStream)

Data Source

GGSN

Source Field

ggsnGtpErrorPDPAddrUnknown

Source Section

ggsnGtpErrorStats

ggsnGtpErrorPdpWithoutTft

The number of PDP context without TFT already activated.

Data Source

GGSN

Source Field

ggsnGtpErrorPdpWithoutTft

ggsnGtpErrorReferenceInexistent

Results Reference does not exist (SNMP DataStream)

Data Source

GGSN

Source Field

ggsnGtpErrReferenceInexistent

Source Section

ggsnGtpErrorStats

ggsnGtpErrorResourceUnavailable

Results Resources not available (SNMP DataStream)

Data Source

GGSN

Source Field

ggsnGtpErrResourceUnavailable

Source Section

ggsnGtpErrorStats

ggsnGtpErrorServiceUnsupported

Results Service is unsupported (SNMP DataStream)

Data Source

GGSN

Source Field

ggsnGtpErrServiceUnsupported

Source Section

ggsnGtpErrorStats

ggsnGtpErrorSystemFailure

Results System failure (SNMP DataStream)

Data Source

GGSN

Source Field

ggsnGtpErrorSystemFailure

Source Section

ggsnGtpErrorStats

ggsnGtpErrorSystemFailureUpd

The number of GTP system update failure errors sent by the GGSN

Data Source

GGSN

Source Field

ggsnGtpErrorSystemFailureUpd

ggsnGtpErrorTFTSemanticError

Results TFT semantic error (SNMP DataStream)

Data Source

GGSN

Source Field

ggsnGtpErrorTFTSemanticError

Source Section

ggsnGtpErrorStats

ggsnGtpErrorTFTSyntaxError

Results TFT syntax error (SNMP DataStream)

Data Source

GGSN

Source Field

ggsnGtpErrorTFTSyntaxError

Source Section

ggsnGtpErrorStats

ggsnGtpErrorTFTSyntaxErrorUpd

The number of GTP TFT update syntax errors sent by the GGSN.

Data Source

GGSN

Source Field

ggsnGtpErrorTFTSyntaxErrorUpd

ggsnGtpErrPackFiltSemantErUpd

The number of semantic update packet filter errors sent by the GGSN

Data Source

GGSN

ggsnGtpErrPackFiltSyntaxErUpd

The number of packet filter update syntax errors sent by the GGSN

Data Source

GGSN

ggsnGtpErrReferInexistentDel

The number of reference delete inexistent errors sent by this GGSN

Data Source

GGSN

ggsnGtpErrRefInexistentUpd

The number of reference update inexistent errors sent by this GGSN.

Data Source

GGSN

ggsnGtpErrTFTSemanticErrorUpd

The number of GTP TFT update semantic errors sent by the GGSN.

Data Source

GGSN

ggsnGtpNbrofCreatedTunnels

The total number of GTP tunnels that have been created by the GGSN.

Data Source

GGSN

Source Field

ggsnGtpNbrofCreatedTunnels

ggsnGtpNbrOfTunnels

The number of active GTP tunnels on the GGSN.

Data Source

GGSN

Source Field

ggsnGtpNbrOfTunnels

ggsnGtpPdpCreateReqReceived

Number of (GTP Message) PDP Create Requests received in the GGSN. (SNMP DataStream)

Data Source

GGSN

Source Field

ggsnGtpPdpCreateReqReceived

Source Section

ggsnGtp

ggsnGtpPdpCreateRespSent

Number of (GTP Message) PDP Create Responses transmitted from the GGSN. (SNMP DataStream)

Data Source

GGSN

Source Field

ggsnGtpPdpCreateRespSent

Source Section

ggsnGtp

ggsnGtpPdpDeleteReqReceived

Number of (GTP Message) PDP Delete Requests received in the GGSN. (SNMP DataStream)

Data Source

GGSN

Source Field

ggsnGtpPdpDeleteReqReceived

Source Section

ggsnGtp

ggsnGtpPdpDeleteReqSent

Number of (GTP Message) PDP Delete Requests transmitted from the GGSN. (SNMP DataStream)

Data Source

GGSN

Source Field

ggsnGtpPdpDeleteReqSent

Source Section

ggsnGtp

ggsnGtpPdpDeleteRespReceived

PDP Contexts: PDP delete responses received (SNMP DataStream)

Data Source

GGSN

Source Field

ggsnGtpPdpDeleteRespReceived

Source Section

ggsnGtp

ggsnGtpPdpDeleteRespSent

PDP Contexts: PDP delete responses transmitted (SNMP DataStream)

Data Source

GGSN

Source Field

ggsnGtpPdpDeleteRespSent

Source Section

ggsnGtp

ggsnGtpPdpUpdateReqReceived

Number of (GTP Message) PDP Update Requests received in the GGSN. (SNMP DataStream)

Data Source

GGSN

Source Field

ggsnGtpPdpUpdateReqReceived

Source Section

ggsnGtp

ggsnGtpPdpUpdateReqSent

Number of (GTP Message) PDP Update Requests transmitted from the GGSN. (SNMP DataStream)

Data Source

GGSN

Source Field

ggsnGtpPdpUpdateReqSent

Source Section

ggsnGtp

ggsnGtpPdpUpdateRespReceived

Number of (GTP Message) PDP Update Responses received in the GGSN. (SNMP DataStream)

Data Source

GGSN

Source Field

ggsnGtpPdpUpdateRespReceived

Source Section

ggsnGtp

ggsnGtpPdpUpdateRespSent

Number of (GTP Message) PDP Update Responses transmitted from the GGSN. (SNMP DataStream)

Data Source

GGSN

Source Field

ggsnGtpPdpUpdateRespSent

Source Section

ggsnGtp

ggsnGtpPrAlreadyFulfilled

The number of GTP Prime data record transfer response Request Already Fulfilled received by the GGSN.

Data Source

GGSN

Source Field

ggsnGtpPrAlreadyFulfilled

ggsnGtpPrDataRecTransferReceived

Number of (GTP Message) Data Record Transfer Responses received by this GGSN. (SNMP DataStream)

Data Source

GGSN

Source Field

ggsnGtpPrDataRecTransferRcvd

Source Section

ggsnGtpprime

ggsnGtpPrDataRecTransferSent

Number of (GTP Message) Data Record Transfer Requests sent by this GGSN. (SNMP DataStream)

Data Source

GGSN

Source Field

ggsnGtpPrDataRecTransferSent

Source Section

ggsnGtpprime

ggsnGtpPrDecodingError

The number of GTP Prime data record transfer response ecoding Error received by the GGSN.

Data Source

GGSN

Source Field

ggsnGtpPrDecodingError

ggsnGtpPrDupPacketFulfilled

The number of GTP Prime data record transfer response Request Duplicate Packet Fulfilled received by the GGSN.

Data Source

GGSN

Source Field

ggsnGtpPrDupPacketFulfilled

ggsnGtpPrEchoReqReceived

The number of GTP Prime Echo Requests received by this GGSN. (SNMP DataStream)

Data Source

GGSN

Source Field

ggsnGtpPrEchoReqReceived

Source Section

ggsnGtpprime

ggsnGtpPrEchoRequestsSent

The number of GTP Prime Echo Requests sent by this GGSN. (SNMP DataStream)

Data Source

GGSN

Source Field

ggsnGtpPrEchoRequestsSent

Source Section

ggsnGtpprime

ggsnGtpPrEchoRespReceived

The number of GTP Prime Echo Responses received by this GGSN. (SNMP DataStream)

Data Source

GGSN

Source Field

ggsnGtpPrEchoRespReceived

Source Section

ggsnGtpprime

ggsnGtpPrEchoRespSent

The number of GTP Prime Echo Responses sent by this GGSN. (SNMP DataStream)

Data Source

GGSN

Source Field

ggsnGtpPrEchoRespSent

Source Section

ggsnGtpprime

ggsnGtpPrErrorMandatoryIEInvalid

The number of GTP Prime Mandatory Information Element Invalid errors received by this GGSN. (SNMP DataStream)

Data Source

GGSN

Source Field

ggsnGtpPrErrMndtryIEInvalid

Source Section

ggsnGtpprime

ggsnGtpPrErrorMandatoryIEMissing

The number of GTP Prime mandatory Information Element Missing errors received by this GGSN. (SNMP DataStream)

Data Source

GGSN

Source Field

ggsnGtpPrErrMndtryIEMissing

Source Section

ggsnGtpprime

ggsnGtpPrErrorOptionalIEInvalid

The number of GTP Prime Optional Information Element Invalid errors received by this GGSN. (SNMP DataStream)

Data Source

GGSN

Source Field

ggsnGtpPrErrOptionalIEInvalid

Source Section

ggsnGtpprime

ggsnGtpPrErrorRefInexistent

The number of GTP Prime Reference Inexistent errors received by this GGSN. (SNMP DataStream)

Data Source

GGSN

Source Field

ggsnGtpPrErrorRefInexistent

Source Section

ggsnGtpprime

ggsnGtpPrimeDataRecTransfReqTransm

Number of (GTP Prime) Data record transfer requests transmitted on the GGSN Collected using CLI

Data Source

SGSN

Source Field

MessagesDatarecordtransferrequeststransmitted

Source Section

ggsnstatisticsgtpprime

ggsnGtpPrimeDataRecTransfResRcvd

Number of (GTP Prime) Data record transfer responses received on the GGSN Collected using CLI

Data Source

SGSN

Source Field

MessagesDatarecordtransferresponsesreceived

Source Section

ggsnstatisticsgtpprime

ggsnGtpPrimeEchoReqRcvd

Number of (GTP Prime) Echo requests received on the GGSN Collected using CLI

Data Source

SGSN

Source Field

MessagesEchorequestsreceived

Source Section

ggsnstatisticsgtpprime

ggsnGtpPrimeEchoReqTransm

Number of (GTP Prime) Echo requests transmitted on the GGSN Collected using CLI

Data Source

SGSN

Source Field

MessagesEchorequestsTransmitted

Source Section

ggsnstatisticsgtpprime

ggsnGtpPrimeEchoResRcvd

Number of (GTP Prime) Echo responses received on the GGSN Collected using CLI

Data Source

SGSN

Source Field

MessagesEchoresponsesreceived

Source Section

ggsnstatisticsgtpprime

ggsnGtpPrimeEchoResTransm

Number of (GTP Prime) Echo responses transmitted on the GGSN Collected using CLI

Data Source

SGSN

Source Field

MessagesEchoresponsesTransmitted

Source Section

ggsnstatisticsgtpprime

ggsnGtpPrimeMndtIE_invalid

Number of (GTP Prime) Mandatory IE invalid on the GGSN Collected using CLI

Data Source

SGSN

Source Field

ResultsMandatoryIEinvalid

Source Section

ggsnstatisticsgtpprime

ggsnGtpPrimeMndtIE_missing

Number of (GTP Prime) Mandatory IE missing on the GGSN Collected using CLI

Data Source

SGSN

Source Field

ResultsMandatoryIEmissing

Source Section

ggsnstatisticsgtpprime

ggsnGtpPrimeNodeAliveReqRcvd

Number of (GTP Prime) Node alive requests received on the GGSN Collected using CLI

Data Source

SGSN

Source Field

MessagesNodealiverequestsreceived

Source Section

ggsnstatisticsgtpprime

ggsnGtpPrimeNodeAliveReqTransm

Number of (GTP Prime) Node alive requests transmitted on the GGSN Collected using CLI

Data Source

SGSN

Source Field

MessagesNodealiverequestsTransmitted

Source Section

ggsnstatisticsgtpprime

ggsnGtpPrimeNodeAliveResRcvd

Number of (GTP Prime) Node alive responses received on the GGSN Collected using CLI

Data Source

SGSN

Source Field

MessagesNodealiveresponsesreceived

Source Section

ggsnstatisticsgtpprime

ggsnGtpPrimeNodeAliveResTransm

Number of (GTP Prime) Node alive responses transmitted on the GGSN Collected using CLI

Data Source

SGSN

Source Field

MessagesNodealiveresponsesTransmitted

Source Section

ggsnstatisticsgtpprime

ggsnGtpPrimeOptIE_invalid

Number of (GTP Prime) Optional IE invalid on the GGSN Collected using CLI

Data Source

SGSN

Source Field

ResultsOptionalIEinvalid

Source Section

ggsnstatisticsgtpprime

ggsnGtpPrimeRedReqRcvd

Number of (GTP Prime) Redirection requests received on the GGSN Collected using CLI

Data Source

SGSN

Source Field

MessagesRedirectionrequestsreceived

Source Section

ggsnstatisticsgtpprime

ggsnGtpPrimeRedReqTransm

Number of (GTP Prime) Redirection requests transmitted on the GGSN Collected using CLI

Data Source

SGSN

Source Field

MessagesRedirectionrequestsTransmitted

Source Section

ggsnstatisticsgtpprime

ggsnGtpPrimeRedResRcvd

Number of (GTP Prime) Redirection responses received on the GGSN Collected using CLI

Data Source

SGSN

Source Field

MessagesRedirectionresponsesreceived

Source Section

ggsnstatisticsgtpprime

ggsnGtpPrimeRedResTransm

Number of (GTP Prime) Redirection responses transmitted on the GGSN Collected using CLI

Data Source

SGSN

Source Field

MessagesRedirectionresponsesTransmitted

Source Section

ggsnstatisticsgtpprime

ggsnGtpPrimeVerUnsupPktRcvd

Number of (GTP Prime) Version unsupported packets received on the GGSN Collected using CLI

Data Source

SGSN

Source Field

MessagesVersionunsupportedpacketsreceived

Source Section

ggsnstatisticsgtpprime

ggsnGtpPrimeVerUnsupPktTransm

Number of (GTP Prime) Version unsupported packets transmitted on the GGSN Collected using CLI

Data Source

SGSN

Source Field

MessagesVersionunsupportedpacketsTransmitted

Source Section

ggsnstatisticsgtpprime

ggsnGtpPrInvalidMessageFormat

The number of GTP Prime data record transfer response Invalid Message Format received by the GGSN.

Data Source

GGSN

Source Field

ggsnGtpPrInvalidMessageFormat

ggsnGtpPrNodeAliveReqReceived

Number of (GTP Message) Node Alive Requests received by this GGSN. (SNMP DataStream)

Data Source

GGSN

Source Field

ggsnGtpPrNodeAliveReqReceived

Source Section

ggsnGtpprime

ggsnGtpPrNodeAliveReqSent

Number of (GTP Message) Node Alive Requests sent by this GGSN. (SNMP DataStream)

Data Source

GGSN

Source Field

ggsnGtpPrNodeAliveReqSent

Source Section

ggsnGtpprime

ggsnGtpPrNodeAliveRespReceived

Number of (GTP Message) Node Alive Responses received by this GGSN. (SNMP DataStream)

Data Source

GGSN

Source Field

ggsnGtpPrNodeAliveRespRcvd

Source Section

ggsnGtpprime

ggsnGtpPrNodeAliveRespSent

Number of (GTP Message) Node Alive Responses sent by this GGSN. (SNMP DataStream)

Data Source

GGSN

Source Field

ggsnGtpPrNodeAliveRespSent

Source Section

ggsnGtpprime

ggsnGtpPrNoResource

The number of GTP Prime data record transfer response No Resource received by the GGSN.

Data Source

GGSN

Source Field

ggsnGtpPrNoResource

ggsnGtpPrRedirectReqReceived

Number of (GTP Message) Redirection Requests received by this GGSN. (SNMP DataStream)

Data Source

GGSN

Source Field

ggsnGtpPrRedirectReqReceived

Source Section

ggsnGtpprime

ggsnGtpPrRedirectReqSent

Number of (GTP Message) Redirection Requests sent by this GGSN. (SNMP DataStream)

Data Source

GGSN

Source Field

ggsnGtpPrRedirectReqSent

Source Section

ggsnGtpprime

ggsnGtpPrRedirectRespReceived

Number of (GTP Message) Redirection Responses received by this GGSN. (SNMP DataStream)

Data Source

GGSN

Source Field

ggsnGtpPrRedirectRespReceived

Source Section

ggsnGtpprime

ggsnGtpPrRedirectRespSent

Number of (GTP Message) Redirection Responses sent by this GGSN. (SNMP DataStream)

Data Source

GGSN

Source Field

ggsnGtpPrRedirectRespSent

Source Section

ggsnGtpprime

ggsnGtpPrRequestAccepted

The number of GTP Prime data record transfer response Request Accepted received by the GGSN.

Data Source

GGSN

Source Field

ggsnGtpPrRequestAccepted

ggsnGtpPrRequestUnfulfilled

The number of GTP Prime data record transfer response Request Unfulfilled received by the GGSN.

Data Source

GGSN

Source Field

ggsnGtpPrRequestUnfulfilled

ggsnGtpPrServiceUnsupported

The number of GTP Prime data record transfer response Service Unsupported received by the GGSN.

Data Source

GGSN

Source Field

ggsnGtpPrServiceUnsupported

ggsnGtpPrSndDataRecordPackets

The number of GTP Prime data record transfer request Send Data Record packets sent by the GGSN

Data Source

GGSN

Source Field

ggsnGtpPrSndDataRecordPackets

ggsnGtpPrSystemFailure

The number of GTP Prime data record transfer response System Failure received by the GGSN.

Data Source

GGSN

Source Field

ggsnGtpPrSystemFailure

ggsnGtpPrVersionUnsupported

The number of GTP Prime data record transfer response Version Unsupported received by the GGSN.

Data Source

GGSN

Source Field

ggsnGtpPrVersionUnsupported

ggsnGtpPrVerUnsupPacketsReceived

The number of GTP Prime Version Unsupported packets received by this GGSN. (SNMP DataStream)

Data Source

GGSN

Source Field

ggsnGtpPrVerUnsupPktsReceived

Source Section

ggsnGtpprime

ggsnGtpPrVerUnsupPacketsSent

The number of GTP Prime Version Unsupported packets sent by this GGSN. (SNMP DataStream)

Data Source

GGSN

Source Field

ggsnGtpPrVerUnsupPacketsSent

Source Section

ggsnGtpprime

ggsnGtpRequestsAccepted

Results Request accepted (SNMP DataStream)

Data Source

GGSN

Source Field

ggsnGtpRequestsAccepted

Source Section

ggsnGtp

ggsnGtpUplinkBytes

GTP statistics Uplink Bytes Collected using CLI

Data Source

SGSN

Source Field

GTPstatisticsUplinkBytes

Source Section

ggsnstatisticsgtp

ggsnGtpUplinkBytes_jn

GTP statistics Uplink Bytes (SNMP DataStream)

Data Source

GGSN

Source Field

ggsnGtpUplinkBytes

Source Section

ggsnGtp

ggsnGtpUplinkPackets

GTP statistics Uplink Packets Collected using CLI

Data Source

SGSN

Source Field

GTPstatisticsUplinkpackets

Source Section

ggsnstatisticsgtp

ggsnGtpUplinkPackets_jn

GTP statistics Uplink Packets (SNMP DataStream)

Data Source

GGSN

Source Field

ggsnGtpUplinkPackets

Source Section

ggsnGtp

ggsnGtpVerUnsupPacketsReceived

Number of (GTP Message) Version not supported received in the GGSN. (SNMP DataStream)

Data Source

GGSN

Source Field

ggsnGtpVerUnsupPktsReceived

Source Section

ggsnGtp

ggsnGtpVerUnsupPacketsSent

Number of (GTP Message) Version not supported transmitted from the GGSN. (SNMP DataStream)

Data Source

GGSN

Source Field

ggsnGtpVerUnsupPacketsSent

Source Section

ggsnGtp

ggsnNbrOfActivePdpContexts

Total number of active PDP contexts currently served by this GGSN Collected using CLI.

Data Source

SGSN

Source Field

ActivePDPcontexts

Source Section

ggsnstatistics

ggsnNbrOfActivePdpContexts_jn

The number of active PDP contexts on this GGSN.

Data Source

GGSN

Source Field

ggsnNbrOfActivePdpContexts

Source Section

ggsnGlobalStats

ggsnNbrOfActPdpContextsIpv6

The number of active IPv6 PDP contexts on this GGSN.

Data Source

GGSN

ggsnNbrOfSubscribers

The number of subscribers currently serviced by this GGSN. -Subscriber is uniquely identified by IMSI

Data Source

GGSN

Source Field

ggsnNbrOfSubscribers

ggsnNbrOfSubscribersMean

The mean number of subscribers serviced by this GGSN.

Data Source

GGSN

Source Field

ggsnNbrOfSubscribersMean

ggsnNbrOfTftFilters

The number of Traffic Flow Template filters on this GGSN

Data Source

GGSN

Source Field

ggsnNbrOfTftFilters

ggsnNeighborSolicitationRcv

The number of neighbor solicitation requests received by GGSN. (to discover the routers on the network)

Data Source

GGSN

Source Field

ggsnNeighborSolicitationRcv

ggsnNeighborSolicitationRsp

The number of neighbor solicitation responses from GGSN.

Data Source

GGSN

Source Field

ggsnNeighborSolicitationRsp

ggsnPayloadLoad

Gauge to keep track of the weighted load on the node for the payload part. The gauge is used for the new load balancing scheme.

Data Source

GGSN

Source Field

ggsnPayloadLoad

ggsnRouterSolicitationRcv

The number of router solicitation requests received by GGSN.

Data Source

GGSN

Source Field

ggsnRouterSolicitationRcv

ggsnRouterSolicitationRsp

The number of router solicitation responses from GGSN.

Data Source

GGSN

Source Field

ggsnRouterSolicitationRsp

ggsnSessionTimeoutDeactivation

The number of PDP contexts deactivated on this GGSN due to duration supervision function

Data Source

GGSN

Source Field

ggsnSessionTimeoutDeactivation

ggsnUplinkBytesIpv6

Total bytes for all processed IPv6 uplink packets via this GGSN.

Data Source

GGSN

Source Field

ggsnUplinkBytesIpv6

ggsnUplinkDropsBytes

The total number of uplink bytes dropped by this GGSN (SNMP DataStream)

Data Source

GGSN

Source Field

ggsnUplinkDropsBytes

Source Section

ggsnUplinkTrafficInfo

ggsnUplinkDropsIpv6

The number of dropped IPv6 packets in the uplink direction

Data Source

GGSN

Source Field

ggsnUplinkDropsIpv6

ggsnUplinkPacketsIpv6

Total IPv6 uplink packets processed by this GGSN.

Data Source

GGSN

Source Field

ggsnUplinkPacketsIpv6

gprsMmSgsnAttachRequests

Total number of attach requests per SGSN

Data Source

SGSN

Source Field

gprsMmSgsnAttachRequests

Source Section

GPRS Mobility Management

gprsMmSgsnCurrentlyAttachedSubscribers

Number of currently attached subscriber per SGSN

Data Source

SGSN

Source Field

gprsMmSgsnCurrentlyAttachedSubscribers

Source Section

GPRS Mobility Management

gprsMmSgsnInterRoutingAreaUpdateRequests

Total number of inter SGSN RA updates per SGSN

Data Source

SGSN

Source Field

gprsMmSgsnInterRoutingAreaUpdateRequests

Source Section

GPRS Mobility Management

gprsMmSgsnIntraRoutingAreaUpdateRequests

Total number of intra SGSN RA updates per SGSN (excluding periodic RA update)

Data Source

SGSN

Source Field

gprsMmSgsnIntraRoutingAreaUpdateRequests

Source Section

GPRS Mobility Management

gprsMmSgsnPagingProcedures

Total number of paging procedures per SGSN

Data Source

SGSN

Source Field

gprsMmSgsnPagingProcedures

Source Section

GPRS Mobility Management

gprsMmSgsnRejectedByAdmissionControl

Number of Attach or Inter SGSN RA-update requests that were rejected by admission control

Data Source

SGSN

Source Field

gprsMmSgsnRejectedByAdmissionControl

Source Section

GPRS Mobility Management

gprsMmSgsnSuccessfulPagingProcedures

Successful paging procedures per SGSN

Data Source

SGSN

Source Field

gprsMmSgsnSuccessfulPagingProcedures

Source Section

GPRS Mobility Management

gprsMmSgsnUnsuccAttachRequestsCC14

Number of unsuccessful GPRS attach requests, where the Cause code in the Attach Reject is Cause Code #14

Data Source

SGSN

Source Field

gprsMmSgsnUnsuccessfulAttachRequestsCC14

Source Section

GPRS Mobility Management

gprsMmSgsnUnsuccessfulAttachRequests

Unsuccessful attach requests per SGSN

Data Source

SGSN

Source Field

gprsMmSgsnUnsuccessfulAttachRequests

Source Section

GPRS Mobility Management

gprsMmSgsnUnsuccessfulAttachRequestsCC8

Number of unsuccessful Combined GPRS/IMSI attach, where the Cause code in the Attach Reject is Cause Code #8

Data Source

SGSN

Source Field

gprsMmSgsnUnsuccessfulAttachRequestsCC8

Source Section

GPRS Mobility Management

gprsMmSgsnUnsuccInterRoutingAreaUpdReq

Unsuccessful inter SGSN RA updates per SGSN

Data Source

SGSN

Source Field

gprsMmSgsnUnsuccessfulInterRoutingAreaUpdateRequests

Source Section

GPRS Mobility Management

gprsMmSgsnUnsuccIntraRoutingAreaUpdReq

Unsuccessful intra SGSN RA updates per SGSN (excluding periodic RA update)

Data Source

SGSN

Source Field

gprsMmSgsnUnsuccessfulIntraRoutingAreaUpdateRequests

Source Section

GPRS Mobility Management

gprsMmUnsuccessfulPagingProcedures

Unsuccessful paging procedures per SGSN.

Data Source

SGSN

Source Field

gprsMmUnsuccessfulPagingProcedures

Source Section

GPRS Mobility Management

gprsSmGgsnActivePdpContexts

Total number of active PDP contexts per GGSN

Data Source

SGSN

Source Field

gprsSmGgsnActivePdpContexts

Source Section

GPRS Session Management

gprsSmGgsnPdpDeletions

Total number of PDP context deletion per GGSN

Data Source

SGSN

Source Field

gprsSmGgsnPdpDeletions

Source Section

GPRS Session Management

gprsSmGgsnSuccessfulPdpCreations

Total number of successful PDP context creations per GGSN

Data Source

SGSN

Source Field

gprsSmGgsnSuccessfulPdpCreations

Source Section

GPRS Session Management

gprsSmGgsnSuccessfulPdpUpdatings

Total number of successful PDP context Updating per GGSN

Data Source

SGSN

Source Field

gprsSmGgsnSuccessfulPdpUpdatings

Source Section

GPRS Session Management

gprsSmGgsnUnsuccessfulPdpCreations

Total number of unsuccessful PDP context creations per GGSN

Data Source

SGSN

Source Field

gprsSmGgsnUnsuccessfulPdpCreations

Source Section

GPRS Session Management

gprsSmGgsnUnsuccessfulPdpUpdatings

Total number of unsuccessful PDP context Updating per GGSN

Data Source

SGSN

Source Field

gprsSmGgsnUnsuccessfulPdpUpdatings

Source Section

GPRS Session Management

gprsSmSgsnDeactivations

Total number of PDP context deactivation per SGSN. R7: The number of deactivated PDP contexts, and not deactivation procedures, are counted

Data Source

SGSN

Source Field

gprsSmSgsnDeactivations

Source Section

GPRS Session Management

gprsSmSgsnSuccessfulActivations

Number of successful PDP context activation per SGSN

Data Source

SGSN

Source Field

gprsSmSgsnSuccessfulActivations

Source Section

GPRS Session Management

gprsSmSgsnSuccessfulModifications

Total number of successful PDP context modification per SGSN.

Data Source

SGSN

Source Field

gprsSmSgsnSuccessfulModifications

Source Section

GPRS Session Management

gprsSmSgsnTotalActive

Total number for the active PDP contexts per SGSN.

Data Source

SGSN

Source Field

gprsSmSgsnTotalActive

Source Section

GPRS Session Management

gprsSmSgsnUnsuccActivCC27_28_29_32_33

Unsucccessful activation procedure per SGSN.

Data Source

SGSN

Source Field

gprsSmSgsnUnsuccessfulActivationsCC27_28_29_32_33

Source Section

GPRS Session Management

gprsSmSgsnUnsuccessfulActivations

Number of unsuccessful PDP context activation per SGSN.

Data Source

SGSN

Source Field

gprsSmSgsnUnsuccessfulActivations

Source Section

GPRS Session Management

gprsSmSgsnUnsuccessfulModifications

Unsuccessful PDP context modification per SGSN.

Data Source

SGSN

Source Field

gprsSmSgsnUnsuccessfulModifications

Source Section

GPRS Session Management

GSN_Type

GSN Type (GGSN, SGSN or CGSN)

Data Source

SGSN

Source Section

GPRS General

gsnAutomaticConnectionRestarts

The counter is incremented when an error is detected in software which handles a single subscriber (MS) and results in an automatic connection restart.

Data Source

SGSN

Source Field

gsnAutomaticConnectionRestarts

Source Section

ISP

gsnManualConnectionRestarts

The counter is incremented when an operator manually initiates a restart of a specific subscriber (MS) via the Application Execution PXM form.

Data Source

SGSN

Source Field

gsnManualConnectionRestarts

Source Section

ISP

gsnOloadProtectionGlobalIgnoredNewConn

The counter is incremented when a request for a new connection is ignored on the GPB with global functionality.

Data Source

SGSN

Source Field

gsnOverloadProtectionGlobalIgnoredNewConnection

Source Section

GSN Overload Protection

gsnOloadProtectionIgnoredExistingConn

The counter is incremented when a request for an existing connection is ignored on the GPB with local functionality.

Data Source

SGSN

Source Field

gsnOverloadProtectionIgnoredExistingConnections

Source Section

GSN Overload Protection

gsnOloadProtectionIgnoredNewConn

The counter is incremented when a request for a new connection is ignored on the GPB with local functionality.

Data Source

SGSN

Source Field

gsnOverloadProtectionIgnoredNewConnections

Source Section

GSN Overload Protection

gsnOverloadProtectionSs7MessageReject

The counter is incremented when an outgoing request through SS7 link is rejected

Data Source

SGSN

Source Field

gsnOverloadProtectionSs7MessageReject

Source Section

GSN Overload Protection

GSNRelease

Software Release

Data Source

SGSN

GSNRelease_GGSN

Release

Data Source

SGSN

Source Field

GSNRelease_GGSN

Source Section

GSN General

GTPDownlinkPacketsBuffU

This measurement is a snapshot of the number of IP packets currently being buffered in downlink direction. It is increased when downlink payload is buffered and decreased when packet leaves the buffer.

Data Source

SGSN

Source Field

GTP.DownlinkPacketsBuff.U

Source Section

GTP

GTPGtpuInDataOctIu

The number of octets in incoming GPRS Tunneling Protocol (GTP) data packets on the Iu interface without the GTP-U header.Unit: KOctets (1024 Octets)

Data Source

SGSN

Source Field

GTP.GtpuInDataOctIu

GTPGtpuInDataPktIu

The number of GTP data PDUs which have been accepted and processed by the GTP-U protocol entity on the Iu interface.

Data Source

SGSN

Source Field

GTP.GtpuInDataPktIu

GTPGtpuOutDataOctIu

The number of octets in outgoing GTP data packets on the Iu interface without the GTP-U header.Unit: KOctets (1024 Octets)

Data Source

SGSN

Source Field

GTP.GtpuOutDataOctIu

GTPGtpuOutDataPktIu

The number of GTP data PDUs which have been generated by the GTP-U protocol entity on the Iu interface.

Data Source

SGSN

Source Field

GTP.GtpuOutDataPktIu

GTPInDataOctGn

The number of octets in incoming GTP data packets on the Gn interface.

Data Source

SGSN

Source Field

GTP.InDataOctGn

Source Section

GTP

GTPInDataPktGn

The number of GPRS Tunneling Protocol (GTP) Data PDUs, which have been accepted and processed by the GTP protocol entity on the Gn interface.

Data Source

SGSN

Source Field

GTP.InDataPktGn

Source Section

GTP

GTPMBMSInDataPktGn

This measurement provides the number of GTP data PDUs for MBMS bearer contexts which have been accepted and processed by the GTP entity on the Gn interface.

Data Source

SGSN

Source Field

GTP.MBMSInDataPktGn

Source Section

GTP

GTPMBMSOutDataPktIu

This measurement provides the number of MBMS bearer context GTP data PDUs which have been generated by the GTP-U protocol entity on the Iu interface.

Data Source

SGSN

Source Field

GTP.MBMSOutDataPktIu

Source Section

GTP

GTPOutDataOctGn

The number of octets in outgoing GTP data packets on the Gn interface.

Data Source

SGSN

Source Field

GTP.OutDataOctGn

Source Section

GTP

GTPOutDataPktGn

The number of GTP data PDUs, which have been generated by the GTP protocol entity on the Gn interface

Data Source

SGSN

Source Field

GTP.OutDataPktGn

Source Section

GTP

GTPPayloadgtpuErrorPkt

The number of incoming GTP data packets where payload length indicated in GTP header is inconsistent with actual length.

Data Source

SGSN

Source Field

GTP.PayloadgtpuErrorPkt

Source Section

GTP

GTPTotalDownlinkPacketsBuffU

This measurement provides the total number of IP packets buffered.

Data Source

SGSN

Source Field

GTP.TotalDownlinkPacketsBuff.U

Source Section

GTP

HHOAttInterSGSNNew

This measurement type counts the number of Inter PS Handover attempts in new SGSN, including possible retransmissions. Trigger: Reception of Forward Relocation Request GTP-C message from oldSGSN GSM.

Data Source

SGSN

Source Field

HHO.AttInterSGSNNew

Source Section

Mobility Management

HHOAttInterSGSNOld

This measurement type counts the number of Inter PS Handovers attempts in old SGSN, including possible retransmissions. Trigger: Reception of PS Handover Required BSSGP message from Base Station Subsystem (BSS) when Target RA is situated under cooperating SGSN or is unknown to own SGSN.

Data Source

SGSN

Source Field

HHO.AttInterSGSNOld

Source Section

Mobility Management

HHOAttIntraSGSN

This measurement type counts the number of Intra PS Handover attempts, including possible retransmissons. Trigger: Reception of PS Handover Required BSSGP message from BSS when Target RA is situated under own SGSN.

Data Source

SGSN

Source Field

HHO.AttIntraSGSN

Source Section

Mobility Management

HHOAttOptIntraSGSN

This measurement type counts the number of Optimized PS Handover attempts, including possible retransmissions. Trigger: Reception of PS Handover Complete BSSGP message from BSS when no PS Handover Required has been received.

Data Source

SGSN

Source Field

HHO.AttOptIntraSGSN

Source Section

Mobility Management

HHOSuccInterSGSNNew

This measurement type counts the number of successful Inter PS Handover procedures in new SGSN. Trigger: Sending of Forward Relocation Complete GTP-C message to sourceSGSN GSM.

Data Source

SGSN

Source Field

HHO.SuccInterSGSNNew

Source Section

Mobility Management

HHOSuccInterSGSNOld

This measurement type counts the number of successful PS Handover procedures in old SGSN. Trigger: Reception of Forward Relocation Complete GTP-C message from targetSGSN GSM.

Data Source

SGSN

Source Field

HHO.SuccInterSGSNOld

Source Section

Mobility Management

HHOSuccIntraSGSN

This measurement type counts the number of successful Intra PS Handover procedures. Trigger: Reception of PS Handover Complete BSSGP message from BSS

Data Source

SGSN

Source Field

HHO.SuccIntraSGSN

Source Section

Mobility Management

HHOSuccOptIntraSGSN

This measurement type counts the number of successful Optimized PS Handover procedures. Trigger: Reception of PS Handover Complete BSSGP message from BSS when no PS Handover Required has been received

Data Source

SGSN

Source Field

HHO.SuccOptIntraSGSN

Source Section

Mobility Management

IRATHOAttInterSGSNNewGsmUmts

Counts the number of Inter Inter-Radio Access Technology (IRAT) PS Handover attempts in new SGSN WCDMA, including possible retransmissions. Trigger: Reception of Forward Relocation Request GPRS Tunneling Protocol - Control plane (GTP-C) message in WCDMA from source SGSN when source CELL is GSM.

Data Source

SGSN

Source Field

IRATHO.AttInterSGSNNewGsmUmts

Source Section

Mobility Management

IRATHOAttInterSGSNNewUmtsGsm

Counts the number of Inter IRAT PS Handover attempts in new SGSN when moving from WCDMA to GSM, including possible retransmissions. Trigger: Reception of Forward Relocation Request GTP-C message in GSM from source SGSN when source CELL is WCDMA.

Data Source

SGSN

Source Field

IRATHO.AttInterSGSNNewUmtsGsm

Source Section

Mobility Management

IRATHOAttInterSGSNOldGsmUmts

Counts the number of Inter IRAT PS Handover attempts in old SGSN GSM, including possible retransmissions. Trigger: Reception of PS Handover Required BSSGP message from Base Station Subsystem (BSS) when Target CELL is situated under cooperating WCDMA-SGSN.

Data Source

SGSN

Source Field

IRATHO.AttInterSGSNOldGsmUmts

Source Section

Mobility Management

IRATHOAttInterSGSNOldUmtsGsm

Counts the number of Inter IRAT PS Handover attempts in old SGSN when moving from WCDMA to GSM, including possible retransmissions. Trigger: Reception of Relocation Required RANAP message from RNC when Target CELL is situated under cooperating GSM-SGSN.

Data Source

SGSN

Source Field

IRATHO.AttInterSGSNOldUmtsGsm

Source Section

Mobility Management

IRATHOAttIntraSGSNGsmUmts

Counts the number of Intra SGSN IRAT PS Handover from GSM to WCDMA attempts, including possible retransmissions. Trigger:Reception of PS Handover Required BSSGP message from BSS when Target CELL is situated under own SGSN but under WCDMA control.

Data Source

SGSN

Source Field

IRATHO.AttIntraSGSNGsmUmts

Source Section

Mobility Management

IRATHOAttIntraSGSNUmtsGsm

Counts the number of Intra IRAT PS Handover attempts when moving from WCDMA to GSM, including possible retransmissions. Trigger: Reception of Relocation Required RANAP message from RNC when Target CELL is situated under own SGSN but under GSM control.

Data Source

SGSN

Source Field

IRATHO.AttIntraSGSNUmtsGsm

Source Section

Mobility Management

IRATHOSuccInterSGSNNewGsmUmts

Counts the number of successful Inter IRAT PS Handovers in new SGSN when moving from GSM to WCDMA. Trigger: Sending of Forward Relocation Complete GTP-C message in WCDMA to source SGSN GSM.

Data Source

SGSN

Source Field

IRATHO.SuccInterSGSNNewGsmUmts

Source Section

Mobility Management

IRATHOSuccInterSGSNNewUmtsGsm

Counts the number of successful Inter IRAT PS Handovers when moving from WCDMA to GSM. Trigger: Sending of Forward Relocation Complete GTP-C message in GSM to source SGSN WCDMA

Data Source

SGSN

Source Field

IRATHO.SuccInterSGSNNewUmtsGsm

Source Section

Mobility Management

IRATHOSuccInterSGSNOldGsmUmts

Counts the number of successful Inter IRAT PS Handovers when moving from GSM to WCDMA. Trigger: Reception of Forward Relocation Complete GTP-C message from target SGSN WCDMA when source SGSN is GSM.

Data Source

SGSN

Source Field

IRATHO.SuccInterSGSNOldGsmUmts

Source Section

Mobility Management

IRATHOSuccInterSGSNOldUmtsGsm

Counts the number of successful Inter IRAT PS Handovers in old SGSN when moving from WCDMA to GSM. Trigger: Reception of Forward Relocation Complete GTP-C message from target SGSN GSM when source SGSN is WCDMA.

Data Source

SGSN

Source Field

IRATHO.SuccInterSGSNOldUmtsGsm

Source Section

Mobility Management

IRATHOSuccIntraSGSNGsmUmts

Counts the number of successful Intra IRAT PS Handovers when moving from GSM to WCDMA. Trigger: Reception of Relocation Complete RANAP message from RNC when Source CELL is situated under own SGSN but under GSM control.

Data Source

SGSN

Source Field

IRATHO.SuccIntraSGSNGsmUmts

Source Section

Mobility Management

IRATHOSuccIntraSGSNUmtsGsm

Counts the number of successful Intra IRAT PS Handovers when moving from WCDMA to GSM. Trigger: Reception of PS Handover Complete BSSGP message from BSS when Source CELL is situated under own SGSN but under WCDMA control.

Data Source

SGSN

Source Field

IRATHO.SuccIntraSGSNUmtsGsm

Source Section

Mobility Management

ISYSCAttIntraSgsnGsmUmtsRau

The number of successful intra-SGSN inter-system changes from GSM to WCDMA Systems.

Data Source

SGSN

Source Field

ISYSC.AttIntraSgsnGSMUmtsRau

Source Section

WCDMA-GSM Intersystem Change

ISYSCAttIntraSgsnUmtsGsmRau

The number of attempted intra-SGSN inter-system changes from WCDMA Systems to GSM.

Data Source

SGSN

Source Field

ISYSC.AttIntraSgsnUmtsGsmRau

Source Section

WCDMA-GSM Intersystem Change

ISYSCSuccIntraSgsnGsmUmtsRau

The number of successful intra-SGSN inter-system changes from WCDMA Systems to GSM.

Data Source

SGSN

Source Field

ISYSC.SuccIntraSgsnGSMUmtsRau

Source Section

WCDMA-GSM Intersystem Change

ISYSCSuccIntraSgsnUmtsGsmRau

The number of successful intra-SGSN inter-system changes from WCDMA Systems to GSM.

Data Source

SGSN

Source Field

ISYSC.SuccIntraSgsnUmtsGsmRau

Source Section

WCDMA-GSM Intersystem Change

ISYSCUnsuccIntraSgsnGsmUmtsRauCSPSCoord

This measurement provides the number of intra-SGSN inter-system change procedures being rejected due to the coordination of CS and PS in an MOCN constellation.

Data Source

SGSN

Source Field

ISYSC.UnsuccIntraSgsnGsmUmtsRauCSPSCoord

Source Section

Mobility Management

jnxggsnDownlinkBytes

Total bytes for all processed downlink packets via this GGSN.

Data Source

GGSN

Source Field

ggsnDownlinkBytes

Source Section

ggsnDownlinkTrafficInfo

jnxggsnDownlinkDrops

The number of dropped packets by this GGSN in the downlink direction.

Data Source

GGSN

Source Field

ggsnDownlinkDrops

Source Section

ggsnDownlinkTrafficInfo

jnxggsnDownlinkPackets

Total downlink packets processed by this GGSN.

Data Source

GGSN

Source Field

ggsnDownlinkPackets

Source Section

ggsnDownlinkTrafficInfo

jnxggsnUplinkBytes

Total bytes for all processed uplink packets via this GGSN.

Data Source

GGSN

Source Field

ggsnUplinkBytes

Source Section

ggsnUplinkTrafficInfo

jnxggsnUplinkDrops

The number of dropped packets by this GGSN in the uplink direction.

Data Source

GGSN

Source Field

ggsnUplinkDrops

Source Section

ggsnUplinkTrafficInfo

jnxggsnUplinkPackets

Total uplink packets processed by this GGSN.

Data Source

GGSN

Source Field

ggsnUplinkPackets

Source Section

ggsnUplinkTrafficInfo

jnxicmpInAddrMask

The number of ICMP Address Mask Request messages received.

Data Source

GGSN

Source Field

icmpInAddrMask

Source Section

icmp

jnxicmpInAddrMaskReps

The number of ICMP Address Mask Reply messages received.

Data Source

GGSN

Source Field

icmpInAddrMaskReps

Source Section

icmp

jnxicmpInDestUnreachs

The number of ICMP Destination Unreachable messages received.

Data Source

GGSN

Source Field

icmpInDestUnreachs

Source Section

icmp

jnxicmpInEchoReps

The number of ICMP Echo Reply messages received.

Data Source

GGSN

Source Field

icmpInEchoReps

Source Section

icmp

jnxicmpInEchos

The number of ICMP Echo (request) messages received.

Data Source

GGSN

Source Field

icmpInEchos

Source Section

icmp

jnxicmpInErrors

The number of ICMP messages which the entity received but determined as having ICMP-specific errors (bad ICMP checksums, bad length, etc.).

Data Source

GGSN

Source Field

icmpInErrors

Source Section

icmp

jnxicmpInMsgs

The total number of ICMP messages which the entity received. Note that this counter includes all those counted by icmpInErrors.

Data Source

GGSN

Source Field

icmpInMsgs

Source Section

icmp

jnxicmpInParmProbs

The number of ICMP Parameter Problem messages received.

Data Source

GGSN

Source Field

icmpInParmProbs

Source Section

icmp

jnxicmpInRedirects

The number of ICMP Redirect messages received.

Data Source

GGSN

Source Field

icmpInRedirects

Source Section

icmp

jnxicmpInSrcQuenchs

The number of ICMP Source Quench messages received.

Data Source

GGSN

Source Field

icmpInSrcQuenchs

Source Section

icmp

jnxicmpInTimeExcds

The number of ICMP Time Exceeded messages received.

Data Source

GGSN

Source Field

icmpInTimeExcds

Source Section

icmp

jnxicmpInTimestampReps

The number of ICMP Timestamp Reply messages received.

Data Source

GGSN

Source Field

icmpInTimestampReps

Source Section

icmp

jnxicmpInTimestamps

The number of ICMP Timestamp (request) messages received.

Data Source

GGSN

Source Field

icmpInTimestamps

Source Section

icmp

jnxicmpOutAddrMaskReps

The number of ICMP Address Mask Reply messages sent.

Data Source

GGSN

Source Field

icmpOutAddrMaskReps

Source Section

icmp

jnxicmpOutAddrMasks

The number of ICMP Address Mask Request messages sent.

Data Source

GGSN

Source Field

icmpOutAddrMasks

Source Section

icmp

jnxicmpOutDestUnreachs

The number of ICMP Destination Unreachable messages sent.

Data Source

GGSN

Source Field

icmpOutDestUnreachs

Source Section

icmp

jnxicmpOutEchoReps

The number of ICMP Echo Reply messages sent.

Data Source

GGSN

Source Field

icmpOutEchoReps

Source Section

icmp

jnxicmpOutEchos

The number of ICMP Echo (request) messages sent.

Data Source

GGSN

Source Field

icmpOutEchos

Source Section

icmp

jnxicmpOutErrors

The number of ICMP messages which this entity did not send due to problems discovered within ICMP such as a lack of buffers.

Data Source

GGSN

Source Field

icmpOutErrors

Source Section

icmp

jnxicmpOutMsgs

The total number of ICMP messages which this entity attempted to send.

Data Source

GGSN

Source Field

icmpOutMsgs

Source Section

icmp

jnxicmpOutParmProbs

The number of ICMP Parameter Problem messages sent.

Data Source

GGSN

Source Field

icmpOutParmProbs

Source Section

icmp

jnxicmpOutRedirects

The number of ICMP Redirect messages sent.

Data Source

GGSN

Source Field

icmpOutRedirects

Source Section

icmp

jnxicmpOutSrcQuenchs

The number of ICMP Source Quench messages sent.

Data Source

GGSN

Source Field

icmpOutSrcQuenchs

Source Section

icmp

jnxicmpOutTimeExcds

The number of ICMP Time Exceeded messages sent.

Data Source

GGSN

Source Field

icmpOutTimeExcds

Source Section

icmp

jnxicmpOutTimestampReps

The number of ICMP Timestamp Reply messages sent.

Data Source

GGSN

Source Field

icmpOutTimestampReps

Source Section

icmp

jnxicmpOutTimestamps

The number of ICMP Timestamp (request) messages sent

Data Source

GGSN

Source Field

icmpOutTimestamps

Source Section

icmp

jnxIcmpv6StatsAddrUnreachs

The total number of 'address unreachable' messages generated.

Data Source

GGSN

Source Field

jnxIcmpv6StatsAddrUnreachs

Source Section

jnxIcmpv6GlobalStats

jnxIcmpv6StatsAdminProhibits

The total number of 'dministratively prohibited messages generated.

Data Source

GGSN

Source Field

jnxIcmpv6StatsAdminProhibits

Source Section

jnxIcmpv6GlobalStats

jnxIcmpv6StatsBadChecksums

The total number of messages with bad checksums.

Data Source

GGSN

Source Field

jnxIcmpv6StatsBadChecksums

Source Section

jnxIcmpv6GlobalStats

jnxIcmpv6StatsBadCodes

The total number of messages with bad code fields.

Data Source

GGSN

Source Field

jnxIcmpv6StatsBadCodes

Source Section

jnxIcmpv6GlobalStats

jnxIcmpv6StatsBadHdrFields

The total number of 'erroneous header field' messages generated.

Data Source

GGSN

Source Field

jnxIcmpv6StatsBadHdrFields

Source Section

jnxIcmpv6GlobalStats

jnxIcmpv6StatsBadLenths

The total number of messages with bad length.

Data Source

GGSN

Source Field

jnxIcmpv6StatsBadLenths

Source Section

jnxIcmpv6GlobalStats

jnxIcmpv6StatsBadNextHdrs

The total number of 'unrecognized next header' messages generated.

Data Source

GGSN

Source Field

jnxIcmpv6StatsBadNextHdrs

Source Section

jnxIcmpv6GlobalStats

jnxIcmpv6StatsBadOptions

The total number of 'unrecognized option' messages generated.

Data Source

GGSN

Source Field

jnxIcmpv6StatsBadOptions

Source Section

jnxIcmpv6GlobalStats

jnxIcmpv6StatsBeyondScopes

The total number of 'beyond scope' messages generated.

Data Source

GGSN

Source Field

jnxIcmpv6StatsBeyondScopes

Source Section

jnxIcmpv6GlobalStats

jnxIcmpv6StatsCantErrors

The total number of errors not generated because the the old message was an icmp error.

Data Source

GGSN

Source Field

jnxIcmpv6StatsCantErrors

Source Section

jnxIcmpv6GlobalStats

jnxIcmpv6StatsErrors

The total number of calls to icmp_error.

Data Source

GGSN

Source Field

jnxIcmpv6StatsErrors

Source Section

jnxIcmpv6GlobalStats

jnxIcmpv6StatsExceedReasms

The total number of 'time exceed reassembly' messages generated

Data Source

GGSN

Source Field

jnxIcmpv6StatsExceedReasms

Source Section

jnxIcmpv6GlobalStats

jnxIcmpv6StatsExceedTrans

The total number of 'time exceed transit' messages generated.

Data Source

GGSN

Source Field

jnxIcmpv6StatsExceedTrans

Source Section

jnxIcmpv6GlobalStats

jnxIcmpv6StatsExcessNDOptions

The total number of messages processed with too many ND options

Data Source

GGSN

Source Field

jnxIcmpv6StatsExcessNDOptions

Source Section

jnxIcmpv6GlobalStats

jnxIcmpv6StatsInEchoReplies

The total number of Echo Reply messages received.

Data Source

GGSN

Source Field

jnxIcmpv6StatsInEchoReplies

Source Section

jnxIcmpv6GlobalStats

jnxIcmpv6StatsInEchoReqs

The total number of Echo Request messages received.

Data Source

GGSN

Source Field

jnxIcmpv6StatsInEchoReqs

Source Section

jnxIcmpv6GlobalStats

jnxIcmpv6StatsInMLDones

The total number of Multicast Listener Done messages received.

Data Source

GGSN

Source Field

jnxIcmpv6StatsInMLDones

Source Section

jnxIcmpv6GlobalStats

jnxIcmpv6StatsInMLQueries

The total number of Multicast Listener Query messages received.

Data Source

GGSN

Source Field

jnxIcmpv6StatsInMLQueries

Source Section

jnxIcmpv6GlobalStats

jnxIcmpv6StatsInMLReports

The total number of Multicast Listener Report messages received.

Data Source

GGSN

Source Field

jnxIcmpv6StatsInMLReports

Source Section

jnxIcmpv6GlobalStats

jnxIcmpv6StatsInNbrAdvs

The total number of Neighbor Advertisement messages received.

Data Source

GGSN

Source Field

jnxIcmpv6StatsInNbrAdvs

Source Section

jnxIcmpv6GlobalStats

jnxIcmpv6StatsInNbrSolicits

The total number of Neighbor Solicitation messages received.

Data Source

GGSN

Source Field

jnxIcmpv6StatsInNbrSolicits

Source Section

jnxIcmpv6GlobalStats

jnxIcmpv6StatsInNIReplies

The total number of Node Information Report messages received.

Data Source

GGSN

Source Field

jnxIcmpv6StatsInNIReplies

Source Section

jnxIcmpv6GlobalStats

jnxIcmpv6StatsInNIReqs

The total number of Node Information Request messages received.

Data Source

GGSN

Source Field

jnxIcmpv6StatsInNIReqs

Source Section

jnxIcmpv6GlobalStats

jnxIcmpv6StatsInParamProbs

The total number of Parameter Problem messages received.

Data Source

GGSN

Source Field

jnxIcmpv6StatsInParamProbs

Source Section

jnxIcmpv6GlobalStats

jnxIcmpv6StatsInPktTooBigs

The total number of 'Packet Too Big' messages received.

Data Source

GGSN

Source Field

jnxIcmpv6StatsInPktTooBigs

Source Section

jnxIcmpv6GlobalStats

jnxIcmpv6StatsInRedirects

The total number of Redirect messages received.

Data Source

GGSN

Source Field

jnxIcmpv6StatsInRedirects

Source Section

jnxIcmpv6GlobalStats

jnxIcmpv6StatsInRtrAdvs

The total number of Router Advertisment messages received.

Data Source

GGSN

Source Field

jnxIcmpv6StatsInRtrAdvs

Source Section

jnxIcmpv6GlobalStats

jnxIcmpv6StatsInRtrRenumbers

The total number of Router Renumber messages received.

Data Source

GGSN

Source Field

jnxIcmpv6StatsInRtrRenumbers

Source Section

jnxIcmpv6GlobalStats

jnxIcmpv6StatsInRtrSolicits

The total number of Router Solicitation messages received.

Data Source

GGSN

Source Field

jnxIcmpv6StatsInRtrSolicits

Source Section

jnxIcmpv6GlobalStats

jnxIcmpv6StatsInTimeExceeds

The total number of Time Exceeded messages received.

Data Source

GGSN

Source Field

jnxIcmpv6StatsInTimeExceeds

Source Section

jnxIcmpv6GlobalStats

jnxIcmpv6StatsInUnreachables

The total number of Unreachable messages received.

Data Source

GGSN

Source Field

jnxIcmpv6StatsInUnreachables

Source Section

jnxIcmpv6GlobalStats

jnxIcmpv6StatsNoRoutes

The total number of no route messages generated.

Data Source

GGSN

Source Field

jnxIcmpv6StatsNoRoutes

Source Section

jnxIcmpv6GlobalStats

jnxIcmpv6StatsOthers

The total number of generated messages types other than the ones listed above.

Data Source

GGSN

Source Field

jnxIcmpv6StatsOthers

Source Section

jnxIcmpv6GlobalStats

jnxIcmpv6StatsOutEchoReplies

The total number of Echo Reply messages transmitted.

Data Source

GGSN

Source Field

jnxIcmpv6StatsOutEchoReplies

Source Section

jnxIcmpv6GlobalStats

jnxIcmpv6StatsOutEchoReqs

The total number of Echo Request messages transmitted.

Data Source

GGSN

Source Field

jnxIcmpv6StatsOutEchoReqs

Source Section

jnxIcmpv6GlobalStats

jnxIcmpv6StatsOutMLDones

The total number of Multicast Listener Done messages transmitted.

Data Source

GGSN

Source Field

jnxIcmpv6StatsOutMLDones

Source Section

jnxIcmpv6GlobalStats

jnxIcmpv6StatsOutMLQueries

The total number of Multicast Listener Query messages transmitted.

Data Source

GGSN

Source Field

jnxIcmpv6StatsOutMLQueries

Source Section

jnxIcmpv6GlobalStats

jnxIcmpv6StatsOutMLReports

The total number of Multicast Listener Report messages transmitted.

Data Source

GGSN

Source Field

jnxIcmpv6StatsOutMLReports

Source Section

jnxIcmpv6GlobalStats

jnxIcmpv6StatsOutNbrAdvs

The total number of Neighbor Advertisement messages transmitted.

Data Source

GGSN

Source Field

jnxIcmpv6StatsOutNbrAdvs

Source Section

jnxIcmpv6GlobalStats

jnxIcmpv6StatsOutNbrSolicits

The total number of Neighbor Solicitation messages transmitted.

Data Source

GGSN

Source Field

jnxIcmpv6StatsOutNbrSolicits

Source Section

jnxIcmpv6GlobalStats

jnxIcmpv6StatsOutNIReplies

The total number of Node Information Report messages transmitted.

Data Source

GGSN

Source Field

jnxIcmpv6StatsOutNIReplies

Source Section

jnxIcmpv6GlobalStats

jnxIcmpv6StatsOutNIReqs

The total number of Node Information Request messages transmitted.

Data Source

GGSN

Source Field

jnxIcmpv6StatsOutNIReqs

Source Section

jnxIcmpv6GlobalStats

jnxIcmpv6StatsOutParamProbs

The total number of Parameter Problem messages transmitted.

Data Source

GGSN

Source Field

jnxIcmpv6StatsOutParamProbs

Source Section

jnxIcmpv6GlobalStats

jnxIcmpv6StatsOutPktTooBigs

The total number of 'Packet Too Big' messages to be transmitted.

Data Source

GGSN

Source Field

jnxIcmpv6StatsOutPktTooBigs

Source Section

jnxIcmpv6GlobalStats

jnxIcmpv6StatsOutRedirects

The total number of Redirect messages transmitted.

Data Source

GGSN

Source Field

jnxIcmpv6StatsOutRedirects

Source Section

jnxIcmpv6GlobalStats

jnxIcmpv6StatsOutRtrAdvs

The total number of Router Advertisment messages transmitted.

Data Source

GGSN

Source Field

jnxIcmpv6StatsOutRtrAdvs

Source Section

jnxIcmpv6GlobalStats

jnxIcmpv6StatsOutRtrRenumbers

The total number of Router Renumber messages transmitted.

Data Source

GGSN

Source Field

jnxIcmpv6StatsOutRtrRenumbers

Source Section

jnxIcmpv6GlobalStats

jnxIcmpv6StatsOutRtrSolicits

The total number of Router Solicitation messages transmitted.

Data Source

GGSN

Source Field

jnxIcmpv6StatsOutRtrSolicits

Source Section

jnxIcmpv6GlobalStats

jnxIcmpv6StatsOutTimeExceeds

The total number of Time Exceeded messages transmitted.

Data Source

GGSN

Source Field

jnxIcmpv6StatsOutTimeExceeds

Source Section

jnxIcmpv6GlobalStats

jnxIcmpv6StatsOutUnreachables

The total number of Unreachable messages transmitted.

Data Source

GGSN

Source Field

jnxIcmpv6StatsOutUnreachables

Source Section

jnxIcmpv6GlobalStats

jnxIcmpv6StatsPortUnreachs

The total number of 'port unreachable' messages generated.

Data Source

GGSN

Source Field

jnxIcmpv6StatsPortUnreachs

Source Section

jnxIcmpv6GlobalStats

jnxIcmpv6StatsRedirects

The total number of 'redirect' messages generated.

Data Source

GGSN

Source Field

jnxIcmpv6StatsRedirects

Source Section

jnxIcmpv6GlobalStats

jnxIcmpv6StatsResponses

The total number of message responses generated.

Data Source

GGSN

Source Field

jnxIcmpv6StatsResponses

Source Section

jnxIcmpv6GlobalStats

jnxIcmpv6StatsTooBigs

The total number of 'Packet Too Big' messages generated.

Data Source

GGSN

Source Field

jnxIcmpv6StatsTooBigs

Source Section

jnxIcmpv6GlobalStats

jnxIcmpv6StatsTooFreqs

The total number of errors not generated due to rate limitations.

Data Source

GGSN

Source Field

jnxIcmpv6StatsTooFreqs

Source Section

jnxIcmpv6GlobalStats

jnxIcmpv6StatsTooShorts

The total number of messages less than the minimum length.

Data Source

GGSN

Source Field

jnxIcmpv6StatsTooShorts

Source Section

jnxIcmpv6GlobalStats

jnxipForwDatagrams

The number of input datagrams for which this entity was not their final IP destination, as a result of which an attempt was made to find a route to forward them to that final destination.

Data Source

GGSN

Source Field

ipForwDatagrams

Source Section

ip

jnxipFragCreates

The number of IP datagram fragments that have been generated as a result of fragmentation at this entity.

Data Source

GGSN

Source Field

ipFragCreates

Source Section

ip

jnxipFragFails

The number of IP datagrams that have been discarded because they needed to be fragmented at this entity but could not be, e.g., because their Don't Fragment flag was set.

Data Source

GGSN

Source Field

ipFragFails

Source Section

ip

jnxipFragOKs

The number of IP datagrams that have been successfully fragmented at this entity.

Data Source

GGSN

Source Field

ipFragOKs

Source Section

ip

jnxipInAddrErrors

The number of input datagrams discarded because the IP address in their IP header's destination field was not a valid address to be received at this entity.

Data Source

GGSN

Source Field

ipInAddrErrors

Source Section

ip

jnxipInDelivers

The total number of input datagrams successfully delivered to IP user-protocols (including ICMP).

Data Source

GGSN

Source Field

ipInDelivers

Source Section

ip

jnxipInDiscards

The number of input IP datagrams for which no problems were encountered to prevent their continued processing, but which were discarded (e.g., for lack of buffer space).

Data Source

GGSN

Source Field

ipInDiscards

Source Section

ip

jnxipInHdrErrors

The number of input datagrams discarded due to errors in their IP headers.

Data Source

GGSN

Source Field

ipInHdrErrors

Source Section

ip

jnxipInReceives

The total number of input datagrams received from interfaces, including those received in error.

Data Source

GGSN

Source Field

ipInReceives

Source Section

ip

jnxipInUnknownProtos

The number of locally-addressed datagrams received successfully but discarded because of an unknown or unsupported protocol.

Data Source

GGSN

Source Field

ipInUnknownProtos

Source Section

ip

jnxipOutDiscards

The number of output IP datagrams for which no problem was encountered to prevent their transmission to their destination, but which were discarded (e.g., for lack of buffer space).

Data Source

GGSN

Source Field

ipOutDiscards

Source Section

ip

jnxipOutNoRoutes

The number of IP datagrams discarded because no route could be found to transmit them to their destination.

Data Source

GGSN

Source Field

ipOutNoRoutes

Source Section

ip

jnxipOutRequests

The total number of IP datagrams which local IP user-protocols (including ICMP) supplied to IP in requests for transmission.

Data Source

GGSN

Source Field

ipOutRequests

Source Section

ip

jnxipReasmFails

The number of failures detected by the IP re-assembly algorithm (for whatever reason: timed out, errors, etc).

Data Source

GGSN

Source Field

ipReasmFails

Source Section

ip

jnxipReasmOKs

The number of IP datagrams successfully re-assembled.

Data Source

GGSN

Source Field

ipReasmOKs

Source Section

ip

jnxipReasmReqds

The number of IP fragments received which needed to be reassembled at this entity.

Data Source

GGSN

Source Field

ipReasmReqds

Source Section

ip

jnxipReasmTimeout

The maximum number of seconds that received fragments is held while they are awaiting reassembly at this entity.

Data Source

GGSN

Source Field

ipReasmTimeout

Source Section

ip

jnxipRoutingDiscards

The number of routing entries which were chosen to be discarded even though they are valid. One possible reason for discarding such an entry could be to free-up buffer space for other routing entries.

Data Source

GGSN

Source Field

ipRoutingDiscards

Source Section

ip

jnxIpv6StatsBadOptions

The total number of IPv6 packets encountering errors in option processing.

Data Source

GGSN

Source Field

jnxIpv6StatsBadOptions

Source Section

jnxIpv6GlobalStats

jnxIpv6StatsBadScopes

The total number of IPv6 packets that violate scope rules.

Data Source

GGSN

Source Field

jnxIpv6StatsBadScopes

Source Section

jnxIpv6GlobalStats

jnxIpv6StatsBadVersions

The total number of IPv6 packets with incorrect version number.

Data Source

GGSN

Source Field

jnxIpv6StatsBadVersions

Source Section

jnxIpv6GlobalStats

jnxIpv6StatsDelivers

The total number of IPv6 packets delivered to upper layers.

Data Source

GGSN

Source Field

jnxIpv6StatsDelivers

Source Section

jnxIpv6GlobalStats

jnxIpv6StatsForwards

The total number of IPv6 packets forwarded.

Data Source

GGSN

Source Field

jnxIpv6StatsForwards

Source Section

jnxIpv6GlobalStats

jnxIpv6StatsForwCacheHits

The total number of forward cache hits.

Data Source

GGSN

Source Field

jnxIpv6StatsForwCacheHits

Source Section

jnxIpv6GlobalStats

jnxIpv6StatsForwCacheMisses

The total number of forward cache misses.

Data Source

GGSN

Source Field

jnxIpv6StatsForwCacheMisses

Source Section

jnxIpv6GlobalStats

jnxIpv6StatsFragDrops

The total number of fragments dropped.

Data Source

GGSN

Source Field

jnxIpv6StatsFragDrops

Source Section

jnxIpv6GlobalStats

jnxIpv6StatsFragments

The total number of packet fragments received.

Data Source

GGSN

Source Field

jnxIpv6StatsFragments

Source Section

jnxIpv6GlobalStats

jnxIpv6StatsFragOverFlows

The total number of fragments that exceeded limit.

Data Source

GGSN

Source Field

jnxIpv6StatsFragOverFlows

Source Section

jnxIpv6GlobalStats

jnxIpv6StatsFragTimeOuts

The total number of fragments dropped due to timeouts.

Data Source

GGSN

Source Field

jnxIpv6StatsFragTimeOuts

Source Section

jnxIpv6GlobalStats

jnxIpv6StatsHdrNotContinuous

The total number of IPv6 packets whose headers are not continuous.

Data Source

GGSN

Source Field

jnxIpv6StatsHdrNotContinuous

Source Section

jnxIpv6GlobalStats

jnxIpv6StatsInAhs

The total number of IPv6 packets with an IPv6 AH next header.

Data Source

GGSN

Source Field

jnxIpv6StatsInAhs

Source Section

jnxIpv6GlobalStats

jnxIpv6StatsInDestOpts

The total number of IPv6 packets with an IPv6 Destination Option next header.

Data Source

GGSN

Source Field

jnxIpv6StatsInDestOpts

Source Section

jnxIpv6GlobalStats

jnxIpv6StatsInEsps

The total number of IPv6 packets with an IPv6 ESP next header.

Data Source

GGSN

Source Field

jnxIpv6StatsInEsps

Source Section

jnxIpv6GlobalStats

jnxIpv6StatsInEths

The total number of IPv6 packets with an Ethernet next header.

Data Source

GGSN

Source Field

jnxIpv6StatsInEths

Source Section

jnxIpv6GlobalStats

jnxIpv6StatsInFrags

The total number of IPv6 packets with an IPv6 Fragment next header.

Data Source

GGSN

Source Field

jnxIpv6StatsInFrags

Source Section

jnxIpv6GlobalStats

jnxIpv6StatsInHopByHops

The total number of IPv6 packets received with a Hop by Hop next header.

Data Source

GGSN

Source Field

jnxIpv6StatsInHopByHops

Source Section

jnxIpv6GlobalStats

jnxIpv6StatsInIcmps

The total number of IPv6 packets received with an ICMP(v4) next header.

Data Source

GGSN

Source Field

jnxIpv6StatsInIcmps

Source Section

jnxIpv6GlobalStats

jnxIpv6StatsInIcmpv6s

The total number of IPv6 packets with an ICMPv6 next header.

Data Source

GGSN

Source Field

jnxIpv6StatsInIcmpv6s

Source Section

jnxIpv6GlobalStats

jnxIpv6StatsInIdps

The total number of IPv6 packets received with an xns IDP next header.

Data Source

GGSN

Source Field

jnxIpv6StatsInIdps

Source Section

jnxIpv6GlobalStats

jnxIpv6StatsInIgmps

The total number of IPv6 packets received with an IGMP next header.

Data Source

GGSN

Source Field

jnxIpv6StatsInIgmps

Source Section

jnxIpv6GlobalStats

jnxIpv6StatsInIps

The total number of IPv6 packets received with an IPv4 next header.

Data Source

GGSN

Source Field

jnxIpv6StatsInIps

Source Section

jnxIpv6GlobalStats

jnxIpv6StatsInIpv6s

The total number of IPv6 packets with an IPv6 next header.

Data Source

GGSN

Source Field

jnxIpv6StatsInIpv6s

Source Section

jnxIpv6GlobalStats

jnxIpv6StatsInIsoIps

The total number of IPv6 packets with an ISO CLNP next header.

Data Source

GGSN

Source Field

jnxIpv6StatsInIsoIps

Source Section

jnxIpv6GlobalStats

jnxIpv6StatsInNoNhs

The total number of IPv6 packets with no next header.

Data Source

GGSN

Source Field

jnxIpv6StatsInNoNhs

Source Section

jnxIpv6GlobalStats

jnxIpv6StatsInOspfs

The total number of IPv6 packets with an OSPF next header.

Data Source

GGSN

Source Field

jnxIpv6StatsInOspfs

Source Section

jnxIpv6GlobalStats

jnxIpv6StatsInPims

The total number of IPv6 packets with a PIM next header.

Data Source

GGSN

Source Field

jnxIpv6StatsInPims

Source Section

jnxIpv6GlobalStats

jnxIpv6StatsInRoutings

The total number of IPv6 packets with an IPv6 Routing next header.

Data Source

GGSN

Source Field

jnxIpv6StatsInRoutings

Source Section

jnxIpv6GlobalStats

jnxIpv6StatsInTcps

The total number of IPv6 packets received with a TCP next header.

Data Source

GGSN

Source Field

jnxIpv6StatsInTcps

Source Section

jnxIpv6GlobalStats

jnxIpv6StatsInTps

The total number of IPv6 packets received with a TP4 next header.

Data Source

GGSN

Source Field

jnxIpv6StatsInTps

Source Section

jnxIpv6GlobalStats

jnxIpv6StatsInUdps

The total number of IPv6 packets received with a UDP next header.

Data Source

GGSN

Source Field

jnxIpv6StatsInUdps

Source Section

jnxIpv6GlobalStats

jnxIpv6StatsMCNoDests

The total number of IPv6 Multicast packets dropped due to no destination.

Data Source

GGSN

Source Field

jnxIpv6StatsMCNoDests

Source Section

jnxIpv6GlobalStats

jnxIpv6StatsNoGifs

The total number of tunneling IPv6 packets that can't find gif.

Data Source

GGSN

Source Field

jnxIpv6StatsNoGifs

Source Section

jnxIpv6GlobalStats

jnxIpv6StatsNotMcastMembers

The total number of IPv6 multicast packets which are not joined.

Data Source

GGSN

Source Field

jnxIpv6StatsNotMcastMembers

Source Section

jnxIpv6GlobalStats

jnxIpv6StatsOptRateDrops

The total number of IPv6 option packets dropped due to rate limits.

Data Source

GGSN

Source Field

jnxIpv6StatsOptRateDrops

Source Section

jnxIpv6GlobalStats

jnxIpv6StatsOutDeadNextHops

The total number of output IPv6 packets destined to dead next hops.

Data Source

GGSN

Source Field

jnxIpv6StatsOutDeadNextHops

Source Section

jnxIpv6GlobalStats

jnxIpv6StatsOutDiscards

The total number of output IPv6 packets dropped due to no bufs, etc.

Data Source

GGSN

Source Field

jnxIpv6StatsOutDiscards

Source Section

jnxIpv6GlobalStats

jnxIpv6StatsOutFragCreates

The total number of output IPv6 packets that have been generated as a result of fragmentation at the output interface.

Data Source

GGSN

Source Field

jnxIpv6StatsOutFragCreates

Source Section

jnxIpv6GlobalStats

jnxIpv6StatsOutFragFails

The total number of output IPv6 packets that can't be fragmented.

Data Source

GGSN

Source Field

jnxIpv6StatsOutFragFails

Source Section

jnxIpv6GlobalStats

jnxIpv6StatsOutFragOKs

The total number of output IPv6 packets fragmented.

Data Source

GGSN

Source Field

jnxIpv6StatsOutFragOKs

Source Section

jnxIpv6GlobalStats

jnxIpv6StatsOutNoRoutes

The total number of output IPv6 packets discarded because no route could be found.

Data Source

GGSN

Source Field

jnxIpv6StatsOutNoRoutes

Source Section

jnxIpv6GlobalStats

jnxIpv6StatsOutRequests

The total number of IPv6 packets generated by this host.

Data Source

GGSN

Source Field

jnxIpv6StatsOutRequests

Source Section

jnxIpv6GlobalStats

jnxIpv6StatsRawOuts

The total number of IPv6 packets sent with fabricated IPv6 headers.

Data Source

GGSN

Source Field

jnxIpv6StatsRawOuts

Source Section

jnxIpv6GlobalStats

jnxIpv6StatsReasmOKs

The total number of IPv6 packets reassembled successfully.

Data Source

GGSN

Source Field

jnxIpv6StatsReasmOKs

Source Section

jnxIpv6GlobalStats

jnxIpv6StatsReceives

The total number of IPv6 packets received.

Data Source

GGSN

Source Field

jnxIpv6StatsReceives

Source Section

jnxIpv6GlobalStats

jnxIpv6StatsRedirects

The total number of IPv6 packets forwarded on the same net as received.

Data Source

GGSN

Source Field

jnxIpv6StatsRedirects

Source Section

jnxIpv6GlobalStats

jnxIpv6StatsTooManyHdrs

The total number of IPv6 packets discarded due to too many headers.

Data Source

GGSN

Source Field

jnxIpv6StatsTooManyHdrs

Source Section

jnxIpv6GlobalStats

jnxIpv6StatsTooShorts

The total number of IPv6 packets with size smaller than minimum.

Data Source

GGSN

Source Field

jnxIpv6StatsTooShorts

Source Section

jnxIpv6GlobalStats

jnxIpv6StatsTooSmalls

The total number of IPv6 packets with data size less than data length.

Data Source

GGSN

Source Field

jnxIpv6StatsTooSmalls

Source Section

jnxIpv6GlobalStats

jnxIpv6StatsUnreachables

The total number of IPv6 packets received for unreachable destinations.

Data Source

GGSN

Source Field

jnxIpv6StatsUnreachables

Source Section

jnxIpv6GlobalStats

jnxOperationBuffer

The buffer pool utilization in percentage of this subject. Zero if unavailable or nonapplicable.

Data Source

GGSN

Source Field

jnxOperationBuffer

Source Section

jnxOperationBuffer

jnxOperationCPU

The CPU utilization in percentage of this subject. Zero if unavailable or nonapplicable.

Data Source

GGSN

Source Field

jnxOperationCPU

Source Section

jnxOperationCPU

jnxOperationDRAMsize

The DRAM size in bytes of this subject. Zero if unavailable or nonapplicable.

Data Source

GGSN

Source Field

jnxOperationDRAMsize

Source Section

jnxOperationDRAMsize

jnxOperationHeap

The heap utilization in percentage of this subject. Zero if unavailable or nonapplicable.

Data Source

GGSN

Source Field

jnxOperationHeap

Source Section

jnxOperationHeap

jnxOperationISR

The CPU utilization in percentage of this subject spending in interrupt service routine (ISR). Zero if unavailable or nonapplicable.

Data Source

GGSN

Source Field

jnxOperationISR

Source Section

jnxOperationISR

jnxOperationMemory

The installed memory size in Megabytes of this subject. Zero if unavailable or nonapplicable.

Data Source

GGSN

Source Field

jnxOperationMemory

Source Section

jnxOperationMemory

jnxOperationTemp

The temperature in Celsius (degrees C) of this subject. Zero if unavailable or nonapplicable.

Data Source

GGSN

Source Field

jnxOperationTemp

Source Section

jnxOperationTemp

MMAttachedLostG

The number of attached MSs lost due to a crash or restart, except for node restart and large restart. The measurement is collected and aggregated periodically. The accuracy may therefore be affected at repeated restarts.

Data Source

SGSN

Source Field

MM.AttachedLost.G

Source Section

Mobility Management

MMAttachedLostU

The number of attached MSs lost due to a crash or restart, except for node restart and large restart. The measurement is collected and aggregated periodically. The accuracy may therefore be affected at repeated restarts.

Data Source

SGSN

Source Field

MM.AttachedLost.U

Source Section

Mobility Management

MMAttAttachAcceptNon3GPPCompliantG

This is the name of the counter that gives the number of Attach Accept messages that are altered during retransmission due to non 3GPP compliant User Equipment (UEs).

Data Source

SGSN

Source Field

MM.AttAttachAcceptNon3GPPCompliant.G

Source Section

Mobility Management

MMAttAttachAcceptNon3GPPCompliantU

This is the name of the counter that gives the number of Attach Accept messages that are altered during retransmission due to non Third Generation Partnership Project (3GPP) compliant UEs.

Data Source

SGSN

Source Field

MM.AttAttachAcceptNon3GPPCompliant.U

Source Section

Mobility Management

MMAttAuthCiphReqNon3GPPCompliantG

This is the name of the counter that gives the number of Authentication and Ciphering Request messages that are altered during retransmission due to non 3GPP compliant UEs.

Data Source

SGSN

Source Field

MM.AttAuthCiphReqNon3GPPCompliant.G

Source Section

Mobility Management

MMAttAuthCiphReqNon3GPPCompliantU

This is the name of the counter that gives the number of Authentication and Ciphering Request messages that are altered during retransmission due to non 3GPP compliant UEs.

Data Source

SGSN

Source Field

MM.AttAuthCiphReqNon3GPPCompliant.U

Source Section

Mobility Management

MMAttChangeOfLocalTimeG

Incremented when SGSN detects a change in offset and/or daylight savings time in SGSNs handling of MS local time.

Data Source

SGSN

Source Field

MM.AttChangeOfLocalTime.G

Source Section

Mobility Management

MMAttChangeOfLocalTimeU

Incremented when SGSN detects a change in offset and/or daylight savings time in SGSNs handling of MS local time.

Data Source

SGSN

Source Field

MM.AttChangeOfLocalTime.U

Source Section

Mobility Management

MMAttCombiInterSgsnRaUpdateG

The number of combined RA/LA updates (inter SGSN) procedures initiated in the SGSN.

Data Source

SGSN

Source Field

MM.AttCombiInterSgsnRaUpdate.G

MMAttCombiIntraSgsnRaUpdateG

The number of combined RA/LA updates (intra-SGSN) procedures initiated in the SGSN.

Data Source

SGSN

Source Field

MM.AttCombiIntraSgsnRaUpdate.G

MMAttDetachInactiveSubG

The number of attempted detach of inactive subscribers procedures within this SGSN area.

Data Source

SGSN

Source Field

MM.AttDetachInactiveSub.G

Source Section

Mobility Management

MMAttDetachInactiveSubU

This measurement provides the number of attempted detach of inactive subscribers procedures within this SGSN area.

Data Source

SGSN

Source Field

MM.AttDetachInactiveSub.U

Source Section

Mobility Management

MMAttImsiCombiInterSgsnRAUpdaG

The number of combined RA/LA updates with IMSI attach (inter SGSN) procedures initiated in the SGSN.

Data Source

SGSN

Source Field

MM.AttImsiCombiInterSgsnRAUpdate.G

MMAttImsiCombiIntraSgsnRAUpdaG

The number of combined RA/LA updates with IMSI attach (intra SGSN) procedures initiated in the SGSN.

Data Source

SGSN

Source Field

MM.AttImsiCombiIntraSgsnRAUpdate.G

MMAttNormalIntraSgsnRaUpdateG

The number of attempted normal intra-SGSN RA Update procedures initiated in this SGSN. Periodic RA updates are not counted. Resending from MSs are also counted.

Data Source

SGSN

Source Field

MM.AttNormalIntraSgsnRaUpdate.G

MMAttRauAcceptNon3GPPCompliantG

This is the name of the counter that gives the number of Routing Area Update Accept messages that are altered during retransmission due to non 3GPP compliant UEs.

Data Source

SGSN

Source Field

MM.AttRauAcceptNon3GPPCompliant.G

Source Section

Mobility Management

MMAttRauAcceptNon3GPPCompliantU

This is the name of the counter that gives the number of Routing Area Update Accept messages that are altered during retransmission due to non 3GPP compliant UEs.

Data Source

SGSN

Source Field

MM.AttRauAcceptNon3GPPCompliant.U

Source Section

Mobility Management

MMAttServiceReq

The number of attempted Service Requests procedures in this SGSN of the data, signaling, or paging response type. It is increased when a Service Request is received from the MS.

Data Source

SGSN

Source Field

MM.AttServiceReq

MMAttServiceReqData

The number of attempted Service Request procedures in this SGSN of the data type. It is increased when a Service Request, with the data service type is received from the MS.

Data Source

SGSN

Source Field

MM.AttServiceReqData

MMAttServiceReqDataU

The number of attempted Service Request procedures in this SGSN UMTS of the data type. It is increased when a Service Request, with the data service type is received from the MS.

Data Source

SGSN

Source Field

MM.AttServiceReqData.U

Source Section

Mobility Management

MMAttServiceRequestU

The number of attempted Service Requests procedures in this SGSN UMTS of the data, signaling, or paging response type. It is increased when a Service Request is received from the MS.

Data Source

SGSN

Source Field

MM.AttServiceRequest.U

Source Section

Mobility Management

MMNbrActAttachedSubRAG

The number of attached subscribers per RA within this SGSN. Default Alarm Triggering Level: 90% of the limit for attached subscribers depending on HW and the size of the scalable SGSN. Default Alarm Clearing Level: 85% of the limit for ttached subscribers depending on HW and the size of the scalable SGSN. Severity: Minor Default Supervision Active: True

Data Source

SGSN

Source Field

MM.NbrActAttachedS.UbRA.G

MMNbrActAttachedSubRAU

The number of attached subscribers per RA within this SGSN. Default Alarm Triggering Level: 90% of the limit for attached subscribers depending on HW and the size of the scalable SGSN. Default Alarm Clearing Level: 85% of the limit for attached subscribers depending on HW and the size of the scalable SGSN. Severity: Minor Default Supervision Active: False

Data Source

SGSN

Source Field

MM.NbrActAttachedS.UbRA.U

MMNbrActAttachedSubU

Number of attached Subscribers within this SGSN area.

Data Source

SGSN

Source Field

MM.NbrActAttachedSub.U

MMNbrCamelSubG

The number of attached subscriber within this SGSN area with CAMEL service. Default Alarm Triggering Level: value of 40% of the limit for attached subscribers depending on HW and the size of the scalable SGSN. Default Alarm Clearing Level: value of 35% of the limit for attached subscribers depending on HW and the size of the scalable SGSN. Severity: Minor Default Supervision Active: False

Data Source

SGSN

Source Field

MM.NbrCamelSUb.G

Source Section

Mobility Management

MMNbrCamelSubU

The number of attached subscriber within this SGSN area with CAMEL service. Default Alarm Triggering Level: value of 40% of the limit for attached subscribers depending on HW and the size of the scalable SGSN. Default Alarm Clearing Level: value of 35% of the limit for attached subscribers depending on HW and the size of the scalable SGSN. Severity: Minor Default Supervision Active: False

Data Source

SGSN

Source Field

MM.NbrCamelSUb.U

Source Section

Mobility Management

MMnbrDetachedInactiveSubG

The number of detached inactive subscribers procedures within this SGSN area.

Data Source

SGSN

Source Field

MM.nbrDetachedInactiveSub.G

Source Section

Mobility Management

MMnbrDetachedInactiveSubU

This measurement provides the number of detached inactive subscribers within this SGSN area.

Data Source

SGSN

Source Field

MM.nbrDetachedInactiveSub.U

Source Section

Mobility Management

MMNbrHomeSubG

The number of GPRS home subscribers located in the SGSN location register. The GPRS MM state of this subscriber is GMM_REGISTERED or GMM_DEREGISTERED. Only GPRS subscribers that are homed in the same GPRS network are considered.

Data Source

SGSN

Source Field

MM.NbrHomeSub.G

MMNbrHomeSubU

The number of GPRS home subscribers located in the SGSN location register. The GPRS MM state of this subscriber is GMM_REGISTERED or GMM_DEREGISTERED. Only GPRS subscribers that are homed in the same GPRS network are considered.

Data Source

SGSN

Source Field

MM.NbrHomeSub.U

MMNbrSubPmmConnected

This measurement provides the number of subscribers in PMM CONNECTED state. Default Alarm Triggering Level: 180000 Default Alarm Clearing Level: 175000 Severity: Warning Default Supervision Active: False

Data Source

SGSN

Source Field

MM.NbrSubPmmConnected

Source Section

Mobility Management

MMNbrVisitingForeignG

The number of visiting foreign GPRS subscribers located in the SGSN location register. The GPRS MM state of this subscriber is GMM_REGISTERED or GMM_DEREGISTERED. Only GPRS subscribers that are homed in a GPRS network of a foreign country are considered.

Data Source

SGSN

Source Field

MM.NbrVisitingForeign.G

MMNbrVisitingForeignU

The number of visiting foreign GPRS subscribers located in the SGSN location register. The GPRS MM state of this subscriber is GMM_REGISTERED or GMM_DEREGISTERED. Only GPRS subscribers that are homed in a GPRS network of a foreign country are considered.

Data Source

SGSN

Source Field

MM.NbrVisitingForeign.U

MMNbrVisitingNatSubG

The number of visiting national GPRS subscribers located in the SGSN location register. The GPRS MM state of this subscriber is GMM_REGISTERED or MM_DEREGISTERED. Only GPRS subscribers that are homed in a partner GPRS network of the same country are cons

Data Source

SGSN

Source Field

MM.NbrVisitingNatSub.G

MMNbrVisitingNatSubU

The number of visiting national GPRS subscribers located in the SGSN location register. The GPRS MM state of this subscriber is GMM_REGISTERED or GMM_DEREGISTERED. Only GPRS subscribers that are homed in a partner GPRS network of the same country are cons

Data Source

SGSN

Source Field

MM.NbrVisitingNatSub.U

MMSuccCombiInterSgsnRaUpdateG

The number of successfully performed combined RA/LA updates (inter SGSN) procedures initiated in the SGSN.

Data Source

SGSN

Source Field

MM.SuccCombiInterSgsnRaUpdate.G

MMSuccCombiIntraSgsnRaUpdateG

The number of successfully performed combined RA/LA updates (intra SGSN) procedures initiated in the SGSN.

Data Source

SGSN

Source Field

MM.SuccCombiIntraSgsnRaUpdate.G

MMSuccGprsDetachSgsnG

The number of successfully completed SGSN-initiated GPRS detach procedures within this SGSN area.

Data Source

SGSN

Source Field

MM.Succ.GprsDetachSgsn.G

MMSuccGprsDetachSgsnU

The number of successfully completed SGSN-initiated GPRS detach procedures within this SGSN area.

Data Source

SGSN

Source Field

MM.Succ.GprsDetachSgsn.U

MMSuccNormalIntraSgsnRaUpdateG

The number of successfully performed normal intra-SGSN Routing Area Update procedures initiated in this SGSN. Periodic RA Updates and RA Updates acting as resume of a suspended MS are not counted. The counter is not stepped when resending RA Update Accept to the MS.

Data Source

SGSN

Source Field

MM.SuccNormalIntraSgsnRaUpdate.G

MMSuccNormalIntraSgsnRaUpdateU

The number of successfully performed normal intra-SGSN RA Update procedures initiated in this SGSN. Periodic RA updates and RA updates acting as resume of a suspended MS are not counted. The counter is not stepped when resending RA Update Accept to the MS.

Data Source

SGSN

Source Field

MM.SuccNormalIntraSgsnRaUpdate.U

MMUnsuccAttachCC11G

The number of unsuccessful MM attach procedures that return cause code #11.

Data Source

SGSN

Source Field

MM.UnsuccAttachCC11.G

Source Section

Mobility Management

MMUnsuccAttachCC11U

The number of unsuccessful MM attach procedures that return cause code #11.

Data Source

SGSN

Source Field

MM.UnsuccAttachCC11.U

Source Section

Mobility Management

MMUnsuccAttachCC13G

The number of unsuccessful MM procedures which returns cause code #13, (Roaming not allowed in this location area).

Data Source

SGSN

Source Field

MM.UnsuccAttachCC13.G

MMUnsuccAttachCC13U

The number of unsuccessful MM procedures which returns cause code #13, (Roaming not allowed in this location area).

Data Source

SGSN

Source Field

MM.UnsuccAttachCC13.U

MMUnsuccAttachCC14U

The number of unsuccessful MM procedures which returns cause code #14, (GPRS services not allowed in this PLMN).

Data Source

SGSN

Source Field

MM.UnsuccAttachCC14.U

MMUnsuccAttachCC15G

The number of unsuccessful MM procedures, which returns cause code #15, (No suitable cells in location area).

Data Source

SGSN

Source Field

MM.UnsuccAttachCC15.G

MMUnsuccAttachCC15U

The number of unsuccessful MM procedures, which returns cause code #15, (No suitable cells in location area).

Data Source

SGSN

Source Field

MM.UnsuccAttachCC15.U

MMUnsuccAttachCC17G

The number of unsuccessful MM attach procedures, which returns cause code #17, (Network failure).

Data Source

SGSN

Source Field

MM.UnsUccAttachCC17.G

Source Section

Mobility Management

MMUnsuccAttachCC17U

The number of unsuccessful MM attach procedures, which returns cause code #17, (Network failure).

Data Source

SGSN

Source Field

MM.UnsUccAttachCC17.U

Source Section

Mobility Management

MMUnsuccAttachCC22G

The number of unsuccessful MM procedures which returns cause code #22, (Congestion).

Data Source

SGSN

Source Field

MM.UnsuccAttachCC22.G

MMUnsuccAttachCC22U

The number of unsuccessful MM procedures which returns cause code #22, (Congestion).

Data Source

SGSN

Source Field

MM.UnsuccAttachCC22.U

MMUnsuccAttachCC7G

The number of unsuccessful MM procedures which returns cause code #7 (GPRS Services not allowed).

Data Source

SGSN

Source Field

MM.UnsuccAttachCC7.G

MMUnsuccAttachCC7U

The number of unsuccessful MM procedures which returns cause code #7, (GPRS Services not allowed).

Data Source

SGSN

Source Field

MM.UnsuccAttachCC7.U

MMUnsuccAttachCC8U

The number of unsuccessful MM procedures which returns cause code #8, (GPRS and non-GPRS services not allowed).

Data Source

SGSN

Source Field

MM.UnsuccAttachCC8.U

MMUnsuccAttachCSPSCoordU

The number of attach procedures rejected due to Circuit-Switched (CS) and PS coordination in an MOCN constellation.

Data Source

SGSN

Source Field

MM.UnsuccAttachCSPSCoord.U

Source Section

Mobility Management

MMUnsuccAttachLicenseExceeded

This measurement types counts the number of unsuccessful MM attach and inter-SGSN RAU procedures due to the capacity license SAU Attach Limit being exceeded

Data Source

SGSN

Source Field

MM.UnsUccAttachLicenseExceeded

Source Section

Mobility Management

MMUnsuccInterSgsnRauCC10G

This measurement provides the number of unsuccessful MM inter- RAU procedures, that is, whenever a Routing Area Update Reject message is sent to the MS with cause code #10, Implicitly detached.

Data Source

SGSN

Source Field

MM.UnsuccInterSgsnRauCC10.G

Source Section

Mobility Management

MMUnsuccInterSgsnRauCC10U

This measurement provides the number of unsuccessful MM inter- RAU procedures, that is, whenever a Routing Area Update Reject message is sent to the MS with cause code #10, Implicitly detached.

Data Source

SGSN

Source Field

MM.UnsuccInterSgsnRauCC10.U

Source Section

Mobility Management

MMUnsuccInterSgsnRauCC14G

The number of unsuccessful MM inter-RA update procedures, which returns cause code#14, (GPRS services not allowed in this PLMN).

Data Source

SGSN

Source Field

MM.UnsuccInterSgsnRaUCC14.G

Source Section

Mobility Management Indexing

MMUnsuccInterSgsnRauCC14U

The number of unsuccessful MM inter-RA update procedures, which returns cause code#14, (GPRS services not allowed in this PLMN).

Data Source

SGSN

Source Field

MM.UnsuccInterSgsnRaUCC14.U

Source Section

Mobility Management Indexing

© Copyright IBM Corp. 2008, 2009. All Rights Reserved.

MMUnsuccInterSgsnRauCC15G

This measurement provides the number of unsuccessful MM inter- RAU procedures, that is, whenever a Routing Area Update Reject message is sent to the MS with cause code #15, No Suitable Cells In Location Area.

Data Source

SGSN

Source Field

MM.UnsuccInterSgsnRauCC15.G

Source Section

Mobility Management

MMUnsuccInterSgsnRauCC15U

This measurement provides the number of unsuccessful MM inter- RAU procedures, that is, whenever a Routing Area Update Reject message is sent to the MS with cause code #15, No Suitable Cells In Location Area.

Data Source

SGSN

Source Field

MM.UnsuccInterSgsnRauCC15.U

Source Section

Mobility Management

MMUnsuccInterSgsnRauCC17G

The number of unsuccessful MM inter-RA update procedures, which returns cause code#17, (Network failure).

Data Source

SGSN

Source Field

MM.UnsuccInterSgsnRaUCC17.G

Source Section

Mobility Management Indexing

MMUnsuccInterSgsnRauCC17U

The number of unsuccessful MM inter-RA update procedures, which returns cause code#17, (Network failure).

Data Source

SGSN

Source Field

MM.UnsuccInterSgsnRaUCC17.U

Source Section

Mobility Management Indexing

MMUnsuccInterSgsnRauCC9G

The number of unsuccessful MM inter-RA update procedures, which returns cause code#9, (MS identity cannot be derived by the network).

Data Source

SGSN

Source Field

MM.UnsuccInterSgsnRaUCC9.G

Source Section

Mobility Management Indexing

MMUnsuccInterSgsnRauCC9U

The number of unsuccessful MM inter-RA update procedures, which returns cause code#9, (MS identity cannot be derived by the network).

Data Source

SGSN

Source Field

MM.UnsuccInterSgsnRaUCC9.U

© Copyright IBM Corp. 2008, 2009. All Rights Reserved.

Source Section

Mobility Management Indexing

MMUnsuccInterSgsnRauG

This measurement provides the number of unsuccessful MM inter- RAU procedures, that is, whenever a Routing Area Update Reject message is sent to the MS.

Data Source

SGSN

Source Field

MM.UnsuccInterSgsnRau.G

Source Section

Mobility Management

MMUnsuccInterSgsnRauU

This measurement provides the number of unsuccessful MM inter- RAU procedures, that is, whenever a Routing Area Update Reject message is sent to the MS.

Data Source

SGSN

Source Field

MM.UnsuccInterSgsnRau.U

Source Section

Mobility Management

MMUnsuccIntraSgsnRauCC14G

The number of unsuccessful MM intra-RA update procedures, which returns cause code#14, meaning GPRS services not allowed in this PLMN.

Data Source

SGSN

Source Field

MM.UnsUccIntraSgsnRaUCC14.G

Source Section

Mobility Management Indexing

MMUnsuccIntraSgsnRauCC14U

The number of unsuccessful MM intra-RA update procedures, which returns cause code#14, meaning GPRS services not allowed in this PLMN.

Data Source

SGSN

Source Field

MM.UnsUccIntraSgsnRaUCC14.U

Source Section

Mobility Management Indexing

MMUnsuccIntraSgsnRauCC15G

This measurement provides the number of unsuccessful MM intra- RAU procedures, that is, whenever a Routing Area Update Reject message is sent to the MS with cause code #15, No Suitable Cells In Location Area.

Data Source

SGSN

Source Field

MM.UnsuccIntraSgsnRauCC15.G

Source Section

Mobility Management

MMUnsuccIntraSgsnRauCC15U

This measurement provides the number of unsuccessful MM intra- RAU procedures, that is, whenever a Routing Area Update Reject message is sent to the MS with cause code #15, No Suitable Cells In Location Area.

Data Source

SGSN

© Copyright IBM Corp. 2008, 2009. All Rights Reserved.

Source Field

MM.UnsuccIntraSgsnRauCC15.U

Source Section

Mobility Management

MMUnsuccIntraSgsnRauCC17G

The number of unsuccessful MM intra-RA Update procedures, which returns cause code#17, meaning network failure.

Data Source

SGSN

Source Field

MM.UnsuccIntraSgsnRaUCC17.G

Source Section

Mobility Management Indexing

MMUnsuccIntraSgsnRauCC17U

The number of unsuccessful MM intra-RA Update procedures, which returns cause code#17, meaning network failure.

Data Source

SGSN

Source Field

MM.UnsuccIntraSgsnRaUCC17.U

Source Section

Mobility Management Indexing

MMUnsuccIntraSgsnRAUCSPSCoordU

This measurement provides the number of intra-SGSN RAU procedures being rejected due to the coordination of CS and PS in an MOCN constellation.

Data Source

SGSN

Source Field

MM.UnsuccIntraSgsnRAUCSPSCoord.U

Source Section

Mobility Management

MMUnsuccIntraSgsnRauG

This measurement provides the number of unsuccessful MM intra-RAU procedures, that is, whenever a Routing Area Update Reject message is sent to the MS.

Data Source

SGSN

Source Field

MM.UnsuccIntraSgsnRau.G

Source Section

Mobility Management

MMUnsuccIntraSgsnRauU

This measurement provides the number of unsuccessful MM intra- RAU procedures, that is, whenever a Routing Area Update Reject message is sent to the MS.

Data Source

SGSN

Source Field

MM.UnsuccIntraSgsnRau.U

Source Section

Mobility Management

MMUnsuccISRAUCSPSCoordU

The number of Inter-SGSN Routing Area Update procedures rejected due to CS and PS coordination in an MOCN constellation.

Data Source

SGSN

© Copyright IBM Corp. 2008, 2009. All Rights Reserved.

Source Field

MM.UnsuccISRAUCSPSCoord.U

Source Section

Mobility Management

MMUnsuccServiceReq

The number of unsuccessful Service Request procedures in this SGSN (U). It is increased when a Service Reject message is sent.

Data Source

SGSN

Source Field

MM.UnsuccServiceReq

Source Section

Mobility Management Indexing

MMUnsuccServiceReqU

The number of unsuccessful Service Request procedures in this SGSN. It is increased when a Service Reject message is sent.

Data Source

SGSN

Source Field

MM.UnsuccServiceReq.U

Source Section

Mobility Management Indexing

nbrLlcFramesReceived

The number of received LLC frames by the SGSN.

Data Source

SGSN

Source Field

nbrLlcFramesReceived

Source Section

LLC

nbrLlcFramesSent

The number of LLC frames sent by the SGSN.

Data Source

SGSN

Source Field

nbrLlcFramesSent

Source Section

LLC

nbrOfAttachedSub

Number of attached subscriber within this SGSN area.

Data Source

SGSN

Source Field

nbrOfAttachedSub

Source Section

GPRS Mobility Management

nbrOfBlackAnswerInSgsn

The number of black list answers received from the EIR. Note! The counter contains a total count for both GSM and WCDMA.

Data Source

SGSN

© Copyright IBM Corp. 2008, 2009. All Rights Reserved.

Source Field

nbrOfBlackAnswerInSgsn

Source Section

Equipment

nbrOfCheckIMEIRequest

The number of check IMEI requests sent to the EIR. Note that the counter contains a total count for both GSM and WCDMA.

Data Source

SGSN

Source Field

nbrOfCheckIMEIRequest

Source Section

Equipment

nbrOfGreyAnswerInSgsn

The number of grey list answers received from the EIR. Note! The counter contains a total count for both GSM and WCDMA.

Data Source

SGSN

Source Field

nbrOfGreyAnswerInSgsn

Source Section

Equipment

nbrOfSubReady

Number of subscribers in READY state within this SGSN area.

Data Source

SGSN

Source Field

nbrOfSubReady

Source Section

State

nbrOfSubStandby

Number of subscribers in STANDBY state within this SGSN area.

Data Source

SGSN

Source Field

nbrOfSubStandby

Source Section

State

nbrOfUnknownAnswerInSgsn

The number of unknown IMEI answers received from the EIR. Note that the counter contains a total count for both GSM and WCDMA.

Data Source

SGSN

Source Field

nbrOfUnknownAnswerInSgsn

Source Section

Equipment

nbrOfWhiteAnswerInSgsn

The number of white list answers received from the EIR. Note! The counter contains a total count for both GSM and WCDM

Data Source

SGSN

© Copyright IBM Corp. 2008, 2009. All Rights Reserved.

Source Field

nbrOfWhiteAnswerInSgsn

Source Section

Equipment

nbrSubsWithActivePdpInSgsn

Number of mobile subscribers with activated PDP.

Data Source

SGSN

Source Field

nbrSubsWithActivePdpInSgsn

Source Section

GPRS Session Management

NoOfRunDialTot

The number of running dialogues, total.

Data Source

SGSN

Source Field

ss7NoOfRunDialTot

Source Section

SS7 TCAP Layer

NoOfRunOpTot

The number of running operations, total.

Data Source

SGSN

Source Field

ss7NoOfRunOpTot

Source Section

SS7 TCAP Layer

PDPcreations

Total number of attempted PDP context activation procedures served by this GGSN Collected using CLI.

Data Source

SGSN

Source Field

PDPcreations

Source Section

ggsnstatistics

pmReadingsPerHour

The current maximum number of measurement type readings per hour

Data Source

SGSN

Source Field

pmReadingsPerHour

Source Section

PM

pmReadingsPerOccasion

The current maximum number of measurement type readings per reading occasion

Data Source

SGSN

Source Field

pmReadingsPerOccasion

© Copyright IBM Corp. 2008, 2009. All Rights Reserved.

Source Section

PM

QoSAttActConvsPdpContextG

The number of attempted conversational PDP context activation procedures. The counter is incremented when the MS requests the QoS class conversational.

Data Source

SGSN

Source Field

QoS.AttActConversationalPdpContext.G

Source Section

Quality of Service

QoSAttActConvsPdpContextU

The number of attempted conversational PDP context activation procedures. The counter is incremented when the MS requests the QoS class conversational.

Data Source

SGSN

Source Field

QoS.AttActConversationalPdpContext.U

Source Section

Quality of Service

QoSAttActInteractPdpContextG

The number of attempted interactive PDP context activation procedures. The counter is incremented when the MS requests the QoS class interactive or the subscribed QoS class, when the subscribed QoS class is interactive.

Data Source

SGSN

Source Field

QoS.AttActInteractivePdpContext.G

Source Section

Quality of Service

QoSAttActInteractPdpContextU

The number of attempted interactive PDP context activation procedures. The counter is incremented when the MS requests the QoS class interactive or the subscribed QoS class, when the subscribed QoS class is interactive.

Data Source

SGSN

Source Field

QoS.AttActInteractivePdpContext.U

Source Section

Quality of Service

QoSAttActStreamingPdpContextG

The number of attempted streaming PDP context activation procedures. The counter is incremented when the MS requests the QoS class streaming.

Data Source

SGSN

Source Field

QoS.AttActStreamingPdpContext.G

Source Section

Quality of Service

QoSAttActStreamingPdpContextU

The number of attempted streaming PDP context activation procedures. The counter is incremented when the MS requests the QoS class streaming.

Data Source

SGSN

Source Field

QoS.AttActStreamingPdpContext.U

© Copyright IBM Corp. 2008, 2009. All Rights Reserved.

Source Section

Quality of Service

QoSBackgroundAttRabAssU

This measurement provides the number of Radio Access Bearer (RAB) setup attempts for QoS Background. Modify RAB is not counted.

Data Source

SGSN

Source Field

QoS.BackgroundAttRabAss.U

Source Section

Quality of Service

QoSBackgroundSuccRabAssU

This measurement provides the number of successful Radio Access Bearer (RAB) assignment responses for QoS Background. Modify RAB is not counted.

Data Source

SGSN

Source Field

QoS.BackgroundSuccRabAss.U

Source Section

Quality of Service

QoSConversationalAttRabAssU

This measurement provides the number of Radio Access Bearer (RAB) setup attempts for QoS Conversational. Modify RAB is not counted.

Data Source

SGSN

Source Field

QoS.ConversationalAttRabAss.U

Source Section

Quality of Service

QoSConversationalSuccRabAssU

This measurement provides the number of Radio Access Bearer (RAB) assignment responses for QoS conversational. Modify RAB is not counted.

Data Source

SGSN

Source Field

QoS.ConversationalSuccRabAss.U

Source Section

Quality of Service

QoSCurrentGuaranteedBitRate

The current aggregated guaranteed bit rate (UL+DL) for the node, related to streaming PDP contexts.

Data Source

SGSN

Source Field

QoSCurrentGuaranteedBitRate

Source Section

Quality of Service

QoSCurrentGuaranteedBitRateG

The current aggregated guaranteed bit rate (UL+DL) for the node, related to streaming PDP contexts. The QoS.CurrentGuaranteedBitRate counter is split into G and W counters.

Data Source

SGSN

Source Field

QoS.CurrentGuaranteedBitRate.G

© Copyright IBM Corp. 2008, 2009. All Rights Reserved.

Source Section

Quality of Service

QoSCurrentGuaranteedBitRateU

The current aggregated guaranteed bit rate (UL+DL) for the node, related to streaming PDP contexts. The QoS.CurrentGuaranteedBitRate counter is split into G and W counters. R8MD description changes: The current aggregated Guaranteed Bit Rate (uplink and downlink) for the SGSN, related to the traffic classes conversational and streaming.

Data Source

SGSN

Source Field

QoS.CurrentGuaranteedBitRate.U

Source Section

Quality of Service

QoSDLBackgroundPktDiscardedG

The number of downlink background packets discarded on the LLC layer.

Data Source

SGSN

Source Field

QoS.DLBackgroundPktDiscarded.G

Source Section

Quality of Service

QoSDLBackgroundPktDiscardedU

The number of WCDMA downlink background packets discarded.

Data Source

SGSN

Source Field

QoS.DLBackgroundPktDiscarded.U

Source Section

Quality of Service

QoSDLBackgroundPktForwardedG

The number of downlink background packets forwarded on the LLC layer.

Data Source

SGSN

Source Field

QoS.DLBackgroundPktForwarded.G

Source Section

Quality of Service

QoSDLBackgroundPktForwardedU

The number of WCDMA downlink background packets forwarded.

Data Source

SGSN

Source Field

QoS.DLBackgroundPktForwarded.U

Source Section

Quality of Service

QoSDLConvsPktDiscardedG

The number of discarded downlink conversational packets.

Data Source

SGSN

Source Field

QoS.DLConversationalPktDiscarded.G

Source Section

Quality of Service

© Copyright IBM Corp. 2008, 2009. All Rights Reserved.

QoSDLConvsPktDiscardedU

The number of discarded downlink conversational packets.

Data Source

SGSN

Source Field

QoS.DLConversationalPktDiscarded.U

Source Section

Quality of Service

QoSDLConvsPktForwardedG

The number of forwarded downlink conversational packets.

Data Source

SGSN

Source Field

QoS.DLConversationalPktForwarded.G

Source Section

Quality of Service

QoSDLConvsPktForwardedU

The number of forwarded downlink conversational packets.

Data Source

SGSN

Source Field

QoS.DLConversationalPktForwarded.U

Source Section

Quality of Service

QoSDLInteractivePktDiscardedG

The number of downlink interactive packets discarded on the LLC layer.

Data Source

SGSN

Source Field

QoS.DLInteractivePktDiscarded.G

Source Section

Quality of Service

QoSDLInteractivePktDiscardedU

The number of WCDMA downlink interactive packets discarded.

Data Source

SGSN

Source Field

QoS.DLInteractivePktDiscarded.U

Source Section

Quality of Service

QoSDLInteractivePktForwardedG

The number of downlink interactive packets forwarded on the LLC layer.

Data Source

SGSN

Source Field

QoS.DLInteractivePktForwarded.G

Source Section

Quality of Service

QoSDLInteractivePktForwardedU

The number of WCDMA downlink interactive packets forwarded.

Data Source

SGSN

© Copyright IBM Corp. 2008, 2009. All Rights Reserved.

Source Field

QoS.DLInteractivePktForwarded.U

Source Section

Quality of Service

QosDLStreamingPktDiscardedG

The number of downlink streaming packets discarded on the LLC layer.

Data Source

SGSN

Source Field

QoS.DLStreamingPktDiscarded.G

Source Section

Quality of Service

QoSDLStreamingPktDiscardedU

The number of WCDMA downlink streaming packets discarded.

Data Source

SGSN

Source Field

QoS.DLStreamingPktDiscarded.U

Source Section

Quality of Service

QosDLStreamingPktForwardedG

The number of downlink streaming packets forwarded on the LLC layer.

Data Source

SGSN

Source Field

QoS.DLStreamingPktForwarded.G

Source Section

Quality of Service

QoSDLStreamingPktForwardedU

The number of WCDMA downlink streaming packets forwarded.

Data Source

SGSN

Source Field

QoS.DLStreamingPktForwarded.U

Source Section

Quality of Service

QoSGuaBitRateDowngradesG

The number of rejected conversational and downgraded streaming PDP context activation procedures. The counter is incremented when the SGSN, due to admission control, downgrades the requested streaming QoS class to the interactive QoS class. It is not incremented for downgrades related to subscription, highest QoS, GGSN-, or BSS-initiated downgrades.

Data Source

SGSN

Source Field

QoS.GuaranteedBitRateDowngrades.G

Source Section

Quality of Service

QoSGuaBitRateDowngradesU

The number of rejected conversational and downgraded streaming PDP context activation procedures. The counter is incremented when the SGSN, due to admission control, downgrades the requested streaming QoS class to the interactive QoS class. It is not incremented for downgrades related to subscription, highest QoS, GGSN-, or RNC-initiated downgrades. R8MD description changes: The number of times the SGSN has failed to reserve GBR resources for the traffic classes conversational and streaming. If streaming, the traffic class might have been downgraded to interactive.

© Copyright IBM Corp. 2008, 2009. All Rights Reserved.

Data Source

SGSN

Source Field

QoS.GuaranteedBitRateDowngrades.U

Source Section

Quality of Service

QoSGuaranteedBitRateAttemptsG

The number of PDP context activation procedures checked for admission control. The counter is incremented when the SGSN checks Guaranteed Bit Rate (GBR) (admission control) for the conversational and streaming QoS classes.

Data Source

SGSN

Source Field

QoS.GuaranteedBitRateAttempts.G

Source Section

Quality of Service

QoSGuaranteedBitRateAttemptsU

The number of PDP context activation procedures checked for admission control. The counter is incremented when the SGSN checks GBR (admission control) for the conversational and streaming QoS classes. R8MD description changes: The number of times the SGSN has attempted to reserve Guaranteed Bit Rate (GBR) resources for the traffic classes conversational and streaming.

Data Source

SGSN

Source Field

QoS.GuaranteedBitRateAttempts.U

Source Section

Quality of Service

QoSInteractiveAttRabAssU

This measurement provides the number of Radio Access Bearer (RAB) setup attempts for QoS Interactive. Modify RAB is not counted.

Data Source

SGSN

Source Field

QoS.InteractiveAttRabAss.U

Source Section

Quality of Service

QoSInteractiveReSentRabAssU

This measurement provides the number of re-sent Radio Access Bearer (RAB) assignment for QoS interactive. Modify RAB is not counted. When a fallback occurs the ReSent counter for the new class shall be updated.

Data Source

SGSN

Source Field

QoS.InteractiveReSentRabAss.U

Source Section

Quality of Service

QoSInteractiveSuccRabAssU

This measurement provides the number of Radio Access Bearer (RAB) assignment responses for QoS Interactive. Modify RAB is not counted.

Data Source

SGSN

Source Field

QoS.InteractiveSuccRabAss.U

Source Section

Quality of Service

© Copyright IBM Corp. 2008, 2009. All Rights Reserved.

QoSNbrActConvsPdpContextG

The number of currently active conversational PDP contexts.

Data Source

SGSN

Source Field

QoS.NbrActConversationalPdpContext.G

Source Section

Quality of Service

QoSNbrActConvsPdpContextU

The number of currently active conversational PDP contexts.

Data Source

SGSN

Source Field

QoS.NbrActConversationalPdpContext.U

Source Section

Quality of Service

QoSNbrActInteractPdpContextG

The number of currently active interactive PDP contexts.

Data Source

SGSN

Source Field

QoS.NbrActInteractivePdpContext.G

Source Section

Quality of Service

QoSNbrActInteractPdpContextU

The number of currently active interactive PDP contexts.

Data Source

SGSN

Source Field

QoS.NbrActInteractivePdpContext.U

Source Section

Quality of Service

QoSNbrActStreamingPdpContextG

The number of currently active streaming PDP contexts.

Data Source

SGSN

Source Field

QoS.NbrActStreamingPdpContext.G

Source Section

Quality of Service

QoSNbrActStreamingPdpContextU

The number of currently active streaming PDP contexts.

Data Source

SGSN

Source Field

QoS.NbrActStreamingPdpContext.U

Source Section

Quality of Service

QoSStreamingAttRabAssU

This measurement provides the number of Radio Access Bearer (RAB) setup attempts for QoS Streaming. Modify RAB is not counted.

© Copyright IBM Corp. 2008, 2009. All Rights Reserved.

Data Source

SGSN

Source Field

QoS.StreamingAttRabAss.U

Source Section

Quality of Service

QoSStreamingReSentRabAssU

This measurement provides the number of re-sent Radio Access Bearer (RAB) assignment for QoS streaming. Modify RAB is not counted. When a fallback occurs the ReSent counter for the new class shall be updated.

Data Source

SGSN

Source Field

QoS.StreamingReSentRabAss.U

Source Section

Quality of Service

QoSStreamingSuccRabAssU

This measurement provides the number of Radio Access Bearer (RAB) assignment responses for QoS streaming. Modify RAB is not counted.

Data Source

SGSN

Source Field

QoS.StreamingSuccRabAss.U

Source Section

Quality of Service

QoSULBackgroundPktForwarded

The number of uplink background packets forwarded.

Data Source

SGSN

Source Field

QoS.ULBackgroundPktForwarded

Source Section

Quality of Service

QoSULConvsPktForwarded

The number of forwarded uplink conversational packets.

Data Source

SGSN

Source Field

QoS.ULConversationalPktForwarded

Source Section

Quality of Service

QoSULInteractivePktForwarded

The number of uplink interactive packets forwarded.

Data Source

SGSN

Source Field

QoS.ULInteractivePktForwarded

Source Section

Quality of Service

QoSULStreamingPktForwarded

The number of uplink streaming packets forwarded.

Data Source

SGSN

© Copyright IBM Corp. 2008, 2009. All Rights Reserved.

Source Field

QoS.ULStreamingPktForwarded

Source Section

Quality of Service

Release_SNMP_GGSN

Release

Data Source

GGSN

Source Field

Release_SNMP_GGSN

Source Section

GGSN General

RELOCAttInterSGSN

The number of attempted inter-SGSN SRNS relocations.

Data Source

SGSN

Source Field

RELOC.AttInterSGSN

Source Section

SRNS Relocation

RELOCAttInterSGSNNew

The number of attempted inter-SGSN SRNS relocations counted in the target SGSN.

Data Source

SGSN

Source Field

RELOC.AttInterSGSNNew

Source Section

SRNS Relocation

RELOCAttIntraSGSN

The number of attempted intra-SGSN Serving Radio Network Subsystem (SRNS) relocations.

Data Source

SGSN

Source Field

RELOC.AttIntraSGSN

Source Section

SRNS Relocation

RELOCFailInterSGSNInt

The number of failed inter-SGSN SRNS relocations counted in the source SGSN that is due to SGSN-internal reasons.

Data Source

SGSN

Source Field

RELOC.FailInterSGSNInt

Source Section

SRNS Relocation

RELOCFailIntraSGSNInt

The number of failed intra-SGSN SRNS relocations due to internal reasons.

Data Source

SGSN

Source Field

RELOC.FailIntraSGSNInt

© Copyright IBM Corp. 2008, 2009. All Rights Reserved.

Source Section

SRNS Relocation

RELOCSuccInterSGSN

The number of successful inter-SGSN SRNS relocations counted in the source SGSN.

Data Source

SGSN

Source Field

RELOC.SuccInterSGSN

Source Section

SRNS Relocation

RELOCSuccInterSGSNNew

The number of successful inter-SGSN SRNS relocations counted in the target SGSN.

Data Source

SGSN

Source Field

RELOC.SuccInterSGSNNew

Source Section

SRNS Relocation

RELOCSuccIntraSGSN

The number of successful intra-SGSN SRNS relocations.

Data Source

SGSN

Source Field

RELOC.SuccIntraSGSN

Source Section

SRNS Relocation

S_PayloadgtpuErrorPkt

Payload length indicated in GTP header inconsistent with actual length

Data Source

SGSN

S_PayloadgtpuInDataOctGn

Number of octets of incoming GTP data packets on the Gn interface.

Data Source

SGSN

S_PayloadgtpuInDataOctIu

Number of octets of incoming GTP data packets on the Iu interface.

Data Source

SGSN

S_PayloadgtpuInDataPktGn

Number of incoming GTP data packets on the Gn interface.

Data Source

SGSN

S_PayloadgtpuInDataPktIu

Number of Incoming GTP data packets on the Iu interface.

Data Source

SGSN

S_PayloadgtpuOutDataOctGn

Number of octets of outgoing GTP data packets on the Gn interface.

Data Source

SGSN

S_PayloadgtpuOutDataOctIu

Number of octets of outgoing GTP data packets on the Iu interface.

© Copyright IBM Corp. 2008, 2009. All Rights Reserved.

Data Source

SGSN

S_PayloadgtpuOutDataPktGn

Number of outgoing GTP data packets on the Gn interface.

Data Source

SGSN

S_PayloadgtpuOutDataPktIu

Number of outgoing GTP data packets on the Iu interface

Data Source

SGSN

SECAttAuthProcsSgsnSimG

The number of authentication procedures that are started within this SGSN area for a subscriber using a SIM.

Data Source

SGSN

Source Field

SEC.AttAuthProcsSgsnSim.G

Source Section

Security

SECAttAuthProcsSgsnSimU

The number of authentication procedures that are started within this SGSN area for a subscriber using a SIM. Valid for GSM subscribers located within WCDMA Access System.

Data Source

SGSN

Source Field

SEC.AttAuthProcsSgsnSim.U

SECAttAuthProcsSgsnUsimG

The number of authentication procedures that are started within this SGSN area for a subscriber using a Universal Subscriber Identity Module (USIM). Valid for WCDMA subscribers located within GSM Access Systems.

Data Source

SGSN

Source Field

SEC.AttAuthProcsSgsnUsim.G

SECAttAuthProcsSgsnUsimU

The number of authentication procedures that are started within this SGSN area for a subscriber using a USIM. Valid for WCDMA subscribers located within WCDMA Access Systems.

Data Source

SGSN

Source Field

SEC.AttAuthProcsSgsnUsim.U

SECAttContextRequestFromPsgsnG

This measurement provides the number of SGSN context requests received from a partner (new) SGSN for a subscriber deregistering from this SGSN.

Data Source

SGSN

Source Field

SEC.AttContextRequestFromPsgsn.G

Source Section

Security

SECAttContextRequestFromPsgsnU

This measurement provides the number of SGSN context requests sent to a partner (previous) SGSN for subscribers registering afresh in this SGSN.

© Copyright IBM Corp. 2008, 2009. All Rights Reserved.

Data Source

SGSN

Source Field

SEC.AttContextRequestFromPsgsn.U

Source Section

Security

SECAttContextRequestToPsgsnG

The number of SGSN context requests sent to a partner (previous) SGSN for subscribers registering a fresh in this SGSN. Resendings are also counted.

Data Source

SGSN

Source Field

SEC.AttContextRequestToPSgsn.G

Source Section

Security

SECAttContextRequestToPsgsnU

The number of SGSN context requests sent to a partner (previous) SGSN for subscribers registering a fresh in this SGSN. Resendings are also counted.

Data Source

SGSN

Source Field

SEC.AttContextRequestToPSgsn.U

Source Section

Security

SECAttIdentityReqImsiU

The number of attempted Identity Request procedures initiated by this SGSN.

Data Source

SGSN

Source Field

SEC.AttIdentityReqImsi.U

SECAttSecMode

The number of security mode control procedures started by the SGSN.

Data Source

SGSN

Source Field

SEC.AttSecMode

Source Section

Security

SECRecPOAuthFailSgsnG

The number of ciphering and authentication failures within this SGSN area.

Data Source

SGSN

Source Field

SEC.RecPOAuthFailSgsn.G

SECRecPOAuthFailSgsnU

The number of ciphering and authentication failures within this SGSN area.

Data Source

SGSN

Source Field

SEC.RecPOAuthFailSgsn.U

© Copyright IBM Corp. 2008, 2009. All Rights Reserved.

SECSuccAuthProcsSgsnSimG

The number of successful authentication procedures within this SGSN area for a subscriber using a SIM.

Data Source

SGSN

Source Field

SEC.SuccAuthProcsSgsnSim.G

Source Section

Security

SECSuccAuthProcsSgsnSimU

The number of successful authentication procedures within this SGSN area, for a subscriber using a SIM. Valid for GSM subscribers located within WCDMA access System.

Data Source

SGSN

Source Field

SEC.SuccAuthProcsSgsnSim.U

SECSuccAuthProcsSgsnUsimG

The number of successful authentication procedures within this SGSN area, for a subscriber using a USIM. Valid for WCDMA subscribers located within GSM Access Systems.

Data Source

SGSN

Source Field

SEC.SuccAuthProcsSgsnUsim.G

SECSuccAuthProcsSgsnUsimU

The number of successful authentication procedures within this SGSN area, for a subscriber using a USIM. Valid for WCDMA subscribers located within WCDMA Access Systems.

Data Source

SGSN

Source Field

SEC.SuccAuthProcsSgsnUsim.U

SECSuccContextRequestToPsgsnG

The number of successfully replied SGSN context requests that were sent to a partner (previous) SGSN for subscribers registering afresh in this SGSN.

Data Source

SGSN

Source Field

SEC.SuccContextRequestToPSgsn.G

Source Section

Security

SECSuccContextRequestToPsgsnU

The number of successfully replied SGSN context requests that were sent to a partner (previous) SGSN for subscribers registering afresh in this SGSN.

Data Source

SGSN

Source Field

SEC.SuccContextRequestToPSgsn.U

Source Section

Security

SECSuccIdentityReqImsiU

The number of successfully completed Identity Request procedures initiated by this SGSN.

Data Source

SGSN

Source Field

SEC.SuccIdentityReqImsi.U

© Copyright IBM Corp. 2008, 2009. All Rights Reserved.

SECSuccSecMode

The number of successful security mode procedures.

Data Source

SGSN

Source Field

SEC.SuccSecMode

Source Section

Security

Shared

Shared

Data Source

SGSN

Source Field

Shared

Source Section

ggsnstatistics

SMActPdpContextRedirectToDefaultApnU

This measurement provides the number of APN redirections to the SGSN default APN per SGSN

Data Source

SGSN

Source Field

SM.ActPdpContextRedirectToDefaultApn.U

Source Section

Session Management

SMActPdpContextRedirectToSubscribedApnU

This measurement provides the number of APN redirections to the subscribed APN per SGSN

Data Source

SGSN

Source Field

SM.ActPdpContextRedirectToSubscribedApn.U

Source Section

Session Management

SMActPdpContRedirToDefApnG

This measurement provides the number of Access Point Name (APN) redirections to the SGSN default APN per SGSN.

Data Source

SGSN

Source Field

SM.ActPdpContextRedirectToDefaultApn.G

Source Section

Session Management

SMActPdpContRedirToSubsApnG

This measurement provides the number of APN redirections to the subscribed APN per SGSN. Note: If the SGSN default APN included in the subscribed data is used as the negotiated APN, this counter will exclude this scenario.

Data Source

SGSN

Source Field

SM.ActPdpContextRedirectToSubscribedApn.G

Source Section

Session Management

© Copyright IBM Corp. 2008, 2009. All Rights Reserved.

SMAttActPdpContextDynU

Number of attempted dynamic PDP context activation procedures initiated by MS

Data Source

SGSN

Source Field

SM.AttActPdpContextDyn.U

SMAttActPdpContextG

The counter is incremented for each Activate PDP Context Request received on the Gb Interface

Data Source

SGSN

Source Field

SM.AttActPdpContext.G

Source Section

GPRS Session Management

SMAttActPdpContextSgsnHomeG

The number of attempted PDP Context Activation procedures per SGSN for home subscribers. Home subscribers are defined by the roaming status parameter during the IMSI-series configuration.

Data Source

SGSN

Source Field

SM.AttActPdpContextSgsnHome.G

Source Section

Session Management

SMAttActPdpContextSgsnHomeU

The number of attempted PDP Context Activation procedures per SGSN for home subscribers. Home subscribers are defined by the roaming status parameter during the IMSI-series configuration.

Data Source

SGSN

Source Field

SM.AttActPdpContextSgsnHome.U

Source Section

Session Management

SMAttActPdpContextU

Number of attempted PDP context activation procedures initiated by MS.

Data Source

SGSN

Source Field

SM.AttActPdpContext.U

SMAttActSecondPdpContextG

The number of attempted secondary PDP context activation procedures.

Data Source

SGSN

Source Field

SM.AttActSecondPdpContext.G

Source Section

Session Management

SMAttActSecondPdpContextU

The number of attempted secondary PDP context activation procedures.

© Copyright IBM Corp. 2008, 2009. All Rights Reserved.

Data Source

SGSN

Source Field

SM.AttActSecondPdpContext.U

Source Section

Session Management

SMAttDeactPdpContextGgsnG

The counter is incremented for each Deactivate PDP Context Request received on the Gn Interface. R7: The number of deactivated PDP contexts, and not deactivation procedures, are counted

Data Source

SGSN

Source Field

SM.AttDeactPdpContextGgsn.G

Source Section

Session Management

SMAttDeactPdpContextGgsnU

Number of attempted PDP context deactivation procedures initiated by the GGSN. R7: The number of deactivated PDP contexts, and not deactivation procedures, are counted

Data Source

SGSN

Source Field

SM.AttDeactPdpContextGgsn.U

Source Section

Session Management

SMAttDeactPdpContextMsG

The counter is incremented for each Deactivate PDP Context Request received on the Gb Interface. R7: The number of deactivated PDP contexts, and not deactivation procedures, are counted

Data Source

SGSN

Source Field

SM.AttDeactPdpContextMs.G

Source Section

Session Management

SMAttDeactPdpContextMsU

Number of attempted PDP context deactivation procedures initiated by the MS. R7: The number of deactivated PDP contexts, and not deactivation procedures, are counted

Data Source

SGSN

Source Field

SM.AttDeactPdpContextMs.U

Source Section

Session Management

SMAttDeactPdpContextSgsnCC38G

The number of PDP Context Deactivation procedures initiated by the SGSN due to cause code#38, (network failure, being sent to the MS). R7: The number of deactivated PDP contexts, and not deactivation procedures, are counted

Data Source

SGSN

Source Field

SM.AttDeactPdpContextSgsnCC38.G

© Copyright IBM Corp. 2008, 2009. All Rights Reserved.

Source Section

Session Management

SMAttDeactPdpContextSgsnCC38U

The number of PDP Context Deactivation procedures initiated by the SGSN due to cause code#38, (network failure, being sent to the MS). R7: The number of deactivated PDP contexts, and not deactivation procedures, are counted

Data Source

SGSN

Source Field

SM.AttDeactPdpContextSgsnCC38.U

Source Section

Session Management

SMAttDeactPdpContextSgsnCC39G

The number of PDP Context Deactivation procedures initiated by the SGSN due to cause code#39, (reactivation requested, being sent to the MS). R7: The number of deactivated PDP contexts, and not deactivation procedures, are counted

Data Source

SGSN

Source Field

SM.AttDeactPdpContextSgsnCC39.G

Source Section

Session Management

SMAttDeactPdpContextSgsnCC39U

The number of PDP Context Deactivation procedures initiated by the SGSN due to cause code#39, (reactivation requested, being sent to the MS).

Data Source

SGSN

Source Field

SM.AttDeactPdpContextSgsnCC39.U

Source Section

Session Management

SMAttDeactPdpContextSgsnG

The number of PDP Context Deactivation procedures initiated by the SGSN. The counter is not incremented when re-sending Delete PDP Context Request to the GGSN. R7: The number of deactivated PDP contexts, and not deactivation procedures, are counted

Data Source

SGSN

Source Field

SM.AttDeactPdpContextSgsn.G

Source Section

GPRS Session Management

SMAttDeactPdpContextSgsnU

Number of attempted PDP context deactivation procedures initiated by the SGSN. R7: The number of deactivated PDP contexts, and not deactivation procedures, are counted

Data Source

SGSN

Source Field

SM.AttDeactPdpContextSgsn.U

Source Section

Session Management

SMAttModPdpContextMsG

The number of attempted MS-initiated PDP Context Modifications procedures.

Data Source

SGSN

© Copyright IBM Corp. 2008, 2009. All Rights Reserved.

Source Field

SM.AttModPdpContextMs.G

Source Section

Session Management

SMAttModPdpContextMsU

The number of attempted MS-initiated PDP Context Modifications procedures.

Data Source

SGSN

Source Field

SM.AttModPdpContextMs.U

Source Section

Session Management

SMAttModPdpContextSgsnG

The number of attempted SGSN-Initiated PDP Context Modifications procedures.

Data Source

SGSN

Source Field

SM.AttModPdpContextSgsn.G

SMAttModPdpContextSgsnU

The number of attempted SGSN-Initiated PDP Context Modifications procedures.

Data Source

SGSN

Source Field

SM.AttModPdpContextSgsn.U

SMAttRabAssignment

The number of RAB assignment attempts. It is increased when a RAB Assignment Requests message with the information element Setup RAB is sent to the RNC.

Data Source

SGSN

Source Field

SM.AttRabAssignment

Source Section

Session Management

SMAttRabModPS

The number of attempted Radio Access Bearer (RAB) Modify Request procedures. It is incremented when a RAB Modify Request is received.

Data Source

SGSN

Source Field

SM.AttRabModPS

Source Section

Session Management

SMAttUpdPdpContextGgsnG

The number of attempted Gateway GPRS Support Node (GGSN)-Initiated PDP context update procedures. The counter is incremented when a QoS renegotiation is attempted. Applicable when the Operator QoS Control feature is activated.

Data Source

SGSN

Source Field

SM.AttUpdPdpContextGgsn.G

Source Section

Session Management

© Copyright IBM Corp. 2008, 2009. All Rights Reserved.

SMAttUpdPdpContextGgsnU

The number of attempted GGSN-Initiated PDP context update procedures. The counter is incremented when a QoS renegotiation is attempted. Applicable when the Operator QoS Control feature is activated.

Data Source

SGSN

Source Field

SM.AttUpdPdpContextGgsn.U

Source Section

Session Management

SMAttUpdPdpContextSgsnG

The number of attempted SGSN-Initiated PDP Context Update procedures

Data Source

SGSN

Source Field

SM.AttUpdPdpContextSgsn.G

SMAttUpdPdpContextSgsnU

The number of attempted SGSN-Initiated PDP Context Update procedures

Data Source

SGSN

Source Field

SM.AttUpdPdpContextSgsn.U

SMDeactivatedPDPContextOldSgsnG

This measurement provides the number of PDP contexts deleted in old SGSN instead of transferred to new SGSN.

Data Source

SGSN

Source Field

SM.DeactivatedPDPContextOldSgsn.G

Source Section

Session Management

SMDeactivatedPDPContextOldSgsnU

This measurement provides the number of PDP contexts deleted in old SGSN instead of transferred to new SGSN.

Data Source

SGSN

Source Field

SM.DeactivatedPDPContextOldSgsn.U

Source Section

Session Management

SMNbrActivePdpPerSgsnU

The number of mobile subscribers with activated PDP context (that is, subscribers that can send/receive GPRS packet data). The gauge is incremented when a subscriber activates the first context and decremented when the subscriber deactivates the last cont

Data Source

SGSN

Source Field

SM.NbrActivePdpPerSgsn.U

SMNbrActivePDPsApprFor3GDTU

The number of active PDP contexts approved for 3G Direct Tunnel. That is, a 3G Direct Tunnel is set up for these PDP contexts when they run payload.

Data Source

SGSN

Source Field

SM.NbrActivePDPsApprFor3GDT.U

© Copyright IBM Corp. 2008, 2009. All Rights Reserved.

Source Section

Session Management

SMNbrActPdpContextU

Number of active PDP context.

Data Source

SGSN

Source Field

SM.NbrActPdpContext.U

SMNbrActSessions

This measurement provides the number of active MBMS sessions in this SGSN.

Data Source

SGSN

Source Field

SM.NbrActSessions

Source Section

MBMS

SMNotDeactivatedPDPContextOldSgsnG

This measurement provides the number of PDP contexts not deactivated by the old SGSN after the contexts were transferred to the new SGSN. The reason is that the old SGSN aborted the ISRAU procedure when the MS re-entered the old SGSN's service area prior to the old SGSN receiving a CANCEL LOCATION message from the HLR.

Data Source

SGSN

Source Field

SM.NotDeactivatedPDPContextOldSgsn.G

Source Section

Session Management

SMNotDeactivatedPDPContextOldSgsnU

This measurement provides the number of PDP contexts not deactivated by the old SGSN after the contexts were transferred to the new SGSN. The reason is that the old SGSN aborted the ISRAU procedure when the MS re-entered the old SGSN's service area prior to the old SGSN receiving a CANCEL LOCATION message from the HLR.

Data Source

SGSN

Source Field

SM.NotDeactivatedPDPContextOldSgsn.U

Source Section

Session Management

SMPdpContextsLostG

The number of PDP contexts lost due to a crash or restart, except for node restart and large restart. The measurement is collected and aggregated periodically. The accuracy may therefore be affected at repeated restarts.

Data Source

SGSN

Source Field

SM.PdpContextsLost.G

Source Section

Session Management

SMPdpContextsLostU

The number of PDP contexts lost due to a crash or restart, except for node restart and large restart. The measurement is collected and aggregated periodically. The accuracy may therefore be affected at repeated restarts.

Data Source

SGSN

Source Field

SM.PdpContextsLost.U

© Copyright IBM Corp. 2008, 2009. All Rights Reserved.

Source Section

Session Management

SMSAttMoPSG

The number of PS SMS Mobile Originating attempts.

Data Source

SGSN

Source Field

SMSAttMoPS.G

Source Section

Short Message Service

SMSAttMoPSU

The number of PS SMS Mobile Originating attempts.

Data Source

SGSN

Source Field

SMS.AttMoPS.U

SMSAttMtPSG

The number of PS SMS Mobile Terminating attempts.

Data Source

SGSN

Source Field

SMS.AttMtPS.G

Source Section

Short Message Service

SMSAttMtPSU

The number of PS SMS Mobile Terminating attempts.

Data Source

SGSN

Source Field

SMS.AttMtPS.U

SMSSuccMoPSG

The number of successful PS SMS Mobile Originating attempts.

Data Source

SGSN

Source Field

SMS.SuccMoPS.G

Source Section

Short Message Service

SMSSuccMoPSU

The number of successful PS SMS Mobile Originating attempts.

Data Source

SGSN

Source Field

SMS.SuccMoPS.U

SMSSuccMtPSG

The number of successful PS SMS Mobile Terminating attempts.

Data Source

SGSN

Source Field

SMS.SuccMtPS.G

Source Section

Short Message Service

© Copyright IBM Corp. 2008, 2009. All Rights Reserved.

SMSSuccMtPSU

The number of successful PS SMS Mobile Terminating attempts.

Data Source

SGSN

Source Field

SMS.SuccMtPS.U

SMSuccActPdpContextDynU

Number of successful dynamic PDP context activation procedures initiated by MS

Data Source

SGSN

Source Field

SM.SuccActPdpContextDyn.U

SMSuccActPdpContextSgsnHomeG

The number of successful PDP Context Activation procedures per SGSN for home subscribers. Home subscribers are defined by the roaming status parameter during the IMSI-series configuration

Data Source

SGSN

Source Field

SM.SuccActPdpContextSgsnHome.G

Source Section

Session Management

SMSuccActPdpContextSgsnHomeU

The number of successful PDP Context Activation procedures per SGSN for home subscribers. Home subscribers are defined by the roaming status parameter during the IMSI-series configuration

Data Source

SGSN

Source Field

SM.SuccActPdpContextSgsnHome.U

Source Section

Session Management

SMSuccActPdpContextU

Number of successful PDP context activation procedures initiated by MS

Data Source

SGSN

Source Field

SM.SuccActPdpContext.U

SMSuccActSecondPdpContextG

The number of successful secondary PDP context activations.

Data Source

SGSN

Source Field

SM.SuccActSecondPdpContext.G

Source Section

Session Management

SMSuccActSecondPdpContextU

The number of successful secondary PDP context activations.

Data Source

SGSN

Source Field

SM.SuccActSecondPdpContext.U

Source Section

Session Management

© Copyright IBM Corp. 2008, 2009. All Rights Reserved.

SMSuccDeactPdpContextGgsnG

Number of successfully handled PDP context deactivations initiated by the GGSN. R7: The number of deactivated PDP contexts, and not deactivation procedures, are counted

Data Source

SGSN

Source Field

SM.SuccDeactPdpContextGgsn.G

Source Section

Session Management

SMSuccDeactPdpContextGgsnU

Number of successful PDP context deactivation procedures initiated by the GGSN. R7: The number of deactivated PDP contexts, and not deactivation procedures, are counted.

Data Source

SGSN

Source Field

SM.SuccDeactPdpContextGgsn.U

Source Section

Session Management

SMSuccDeactPdpContextMsG

This measurement provides the number of successfully completed PDP context deactivations. R7: The number of deactivated PDP contexts, and not deactivation procedures, are counted

Data Source

SGSN

Source Field

SM.SuccDeactPdpContextMs.G

Source Section

Session Management

SMSuccDeactPdpContextMsU

Number of successful PDP context deactivation procedures initiated by the MS. R7: The number of deactivated PDP contexts, and not deactivation procedures, are counted

Data Source

SGSN

Source Field

SM.SuccDeactPdpContextMs.U

Source Section

Session Management

SMSuccDeactPdpContextSgsnG

The number of successfully handled PDP Context Deactivation procedures initiated by the SGSN. R7: The number of deactivated PDP contexts, and not deactivation procedures, are counted

Data Source

SGSN

Source Field

SM.SuccDeactPdpContextSgsn.G

Source Section

GPRS Session Management

SMSuccDeactPdpContextSgsnU

Number of successful PDP context deactivation procdures initiated by the SGSN. R7: The number of deactivated PDP contexts, and not deactivation procedures, are counted

Data Source

SGSN

Source Field

SM.SuccDeactPdpContextSgsn.U

Source Section

Session Management

© Copyright IBM Corp. 2008, 2009. All Rights Reserved.

SMSuccModPdpContextMsG

The number of successfully handled MS-Initiated PDP Context Modifications procedures. These modifications are performed successfully

Data Source

SGSN

Source Field

SM.SuccModPdpContextMs.G

Source Section

Session Management

SMSuccModPdpContextMsU

The number of successfully handled MS-Initiated PDP context modifications procedures. These modifications are performed successfully when a Modify PDP Context Accept is sent to the MS.

Data Source

SGSN

Source Field

SM.SuccModPdpContextMs.U

Source Section

Session Management

SMSuccModPdpContextSgsnU

The number of successfully handled SGSN-Initiated PDP context modifications procedures. These modifications are performed successfully when a positive Modify PDP Context Accept is received from the MS.

Data Source

SGSN

Source Field

SM.SuccModPdpContextSgsn.U

SMSuccRabAssignment

The number of successful RAB assignments. It is increased when a RAB Assignment Response message is received indicating a successful RAB assignment.

Data Source

SGSN

Source Field

SM.SuccRabAssignment

Source Section

Session Management

SMSuccUpdPdpContextGgsnG

The number of successfully handled GGSN-Initiated PDP context update procedures. The counter is incremented when a QoS renegotiation has been performed.

Data Source

SGSN

Source Field

SM.SuccUpdPdpContextGgsn.G

Source Section

Session Management

SMSuccUpdPdpContextGgsnU

The number of successfully handled GGSN-Initiated PDP context update procedures. The counter is incremented when a QoS renegotiation has been performed.

Data Source

SGSN

Source Field

SM.SuccUpdPdpContextGgsn.U

Source Section

Session Management

© Copyright IBM Corp. 2008, 2009. All Rights Reserved.

SMSuccUpdPdpContextSgsnG

The number of successfully handled SGSN-initiated PDP Context Update procedures. These updates are performed successfully when a positive Update PDP Context response is received from the GGSN.

Data Source

SGSN

Source Field

SM.SuccUpdPdpContextSgsn.G

Source Section

GPRS Session Management

SMSuccUpdPdpContextSgsnU

The number of successfully handled SGSN-initiated PDP Context Update procedures. These updates are performed successfully when a positive Update PDP Context response is received from the GGSN.

Data Source

SGSN

Source Field

SM.SuccUpdPdpContextSgsn.U

SMUnsuccActPdpContextCamelG

This measurement provides the number of unsuccessful primary PDP context activation procedures per SGSN, due to PDP context activation denial, received from the gsmSCF. The counter is incremented when a CAMEL release message is received from the gsmSCF. This measurement type is indexed by either of the indexing options.

Data Source

SGSN

Source Field

SM.UnsuccActPdpContextCamel.G

Source Section

Session Management

SMUnsuccActPdpContextCamelU

This measurement provides the number of unsuccessful primary PDP context activation procedures per SGSN, due to PDP context activation denial, received from the gsmSCF. The counter is incremented when a CAMEL release message is received from the gsmSCF. This measurement type is indexed by either of the indexing options.

Data Source

SGSN

Source Field

SM.UnsuccActPdpContextCamel.U

Source Section

Session Management

SMUnsuccActPdpContextCC26G

The number of unsuccessful PDP Context procedures per SGSN due to cause code #26.

Data Source

SGSN

Source Field

SM.UnsuccActPdpContextCC26.G

Source Section

GPRS Session Management

SMUnsuccActPdpContextCC26U

The number of unsuccessful PDP Context procedures per SGSN due to cause code #26 (Insufficient resources). The reject can be caused due to for example sustained high processor load on one or more GPBs handling signaling or if the hard limit for maximum nu

Data Source

SGSN

Source Field

SM.UnsuccActPdpContextCC26.U

© Copyright IBM Corp. 2008, 2009. All Rights Reserved.

SMUnsuccActPdpContextCC27_28G

The number of unsuccessful PDP Context procedures per SGSN due to cause code #27 (Unknown or missing access point name) and cause code #28 (Unknown PDP address or PDP type). The counter is incremented when SGSN interrogates the DNS resolver and there is a

Data Source

SGSN

Source Field

SM.UnsuccActPdpContextCC27_28.G

Source Section

GPRS Session Management

SMUnsuccActPdpContextCC27_28U

The number of unsuccessful PDP Context procedures per SGSN due to cause code #27 (Unknown or missing access point name) and cause code #28 (Unknown PDP address or PDP type). The counter is incremented when SGSN interrogates the DNS resolver and there is a

Data Source

SGSN

Source Field

SM.UnsuccActPdpContextCC27_28.U

SMUnsuccActPdpContextCC29G

The number of unsuccessful PDP Context procedures per SGSN due to cause code #29 (User Authentication Failed). The counter is ncremented if the request is rejected by GGSN (RADIUS).

Data Source

SGSN

Source Field

SM.UnsuccActPdpContextCC29.G

Source Section

GPRS Session Management

SMUnsuccActPdpContextCC29U

The number of unsuccessful PDP Context procedures per SGSN due to cause code #29 (User Authentication Failed). The counter is incremented if the request is rejected by GGSN (RADIUS).

Data Source

SGSN

Source Field

SM.UnsuccActPdpContextCC29.U

SMUnsuccActPdpContextCC32_33G

The number of unsuccessful PDP Context procedures per SGSN due to cause code #32 (Service option not supported) and cause code #33 (Requested Server Option not subscribed). The counter is incremented if the PDP type is not supported or NSAPI reserved or i

Data Source

SGSN

Source Field

SM.UnsuccActPdpContextCC32_33.G

Source Section

GPRS Session Management

SMUnsuccActPdpContextCC32_33U

The number of unsuccessful PDP Context procedures per SGSN due to cause code #32 (Service option not supported) and cause code #33 (Requested Server Option not subscribed). The counter is incremented if the PDP type is not supported or NSAPI reserved or i

Data Source

SGSN

Source Field

SM.UnsuccActPdpContextCC32_33.U

SMUnsuccActPdpContextCC38G

The number of unsuccessful PDP Context procedures per SGSN due to cause code #38 (Network failure).

© Copyright IBM Corp. 2008, 2009. All Rights Reserved.

Data Source

SGSN

Source Field

SM.UnsuccActPdpContextCC38.G

Source Section

Session Management

SMUnsuccActPdpContextCC38U

The number of unsuccessful PDP Context procedures per SGSN due to cause code #38 (Network failure).

Data Source

SGSN

Source Field

SM.UnsuccActPdpContextCC38.U

Source Section

Session Management

SMUnsuccActPdpContextLicenseExceeded

This measurement provides the number of unsuccessful Session Management (SM) procedures (PDP Context Activation and inter-SGSN RAU with active PDP contexts) per SGSN due to the capacity license PDP Context Limit being exceeded

Data Source

SGSN

Source Field

SM.UnsuccActPdpContextLicenseExceeded

Source Section

Session Management

SMUnsuccActPdpContextU

This measurement provides the number of unsuccessful primary PDP Context Activation procedures per SGSN. The counter is incremented when an Activate PDP Context Reject or a SM Status message is sent as a response if an Activate PDP Context Request is unsuccessful.

Data Source

SGSN

Source Field

SM.UnsuccActPdpContext.U

Source Section

Session Management

ss7_ADP1_MessageOrigUDT

The total number of unit data (UDT) messages originated per class and source (SCCP)

Data Source

SGSN

ss7_ADP1_MessageOrigXUDT

The total number of extended unit data (XUDT) mess origin per class and source (SCCP)

Data Source

SGSN

ss7_ADP1_MessageTermUDT

The total number of UDT messages terminated per class and sink (SCCP)

Data Source

SGSN

SS7_ADP1_MessageTermXUDT

The total number of XUDT messages, that are terminated (SCCP)

Data Source

SGSN

© Copyright IBM Corp. 2008, 2009. All Rights Reserved.

ss7_ADP1_MSUDiscardError

The message signalling unit (MSU) is discarded due to routing data error (MTP)

Data Source

SGSN

ss7_ADP1_ProtocolErrorComp

A protocol error is detected in component portion (TCAP)

Data Source

SGSN

ss7_ADP1_ProtocolErrorTraA

A protocol error has occurred since P-abort is unrec transac id (TID) (TCAP)

Data Source

SGSN

ss7_ADP1_ProtocolErrorTraD

A protocol error has occurred, since P-abort is unrecognized message type (TCAP)

Data Source

SGSN

ss7_ADP1_SLFailure

Signalling link (SL) failure is detected (MTP)

Data Source

SGSN

ss7_ADP1_SLRestoration

SL restoration has occurred (MTP)

Data Source

SGSN

ss7_ADP1_SPInaccess

The adjacent signalling point (SP) is inaccessible (MTP)

Data Source

SGSN

ss7_ADP1_TCMessageReceive

The total number of TC messages received by the stack (TCAP)

Data Source

SGSN

ss7_ADP1_TCMessageSent

The total number of transaction capability (TC) messages sent by the stack (TCAP)

Data Source

SGSN

ss7AssocAvlForUP

The number of times associations are available for UP traffic.

Data Source

SGSN

Source Field

ss7AssocAvlForUP

Source Section

M3UA Management

ss7AssocUnavlForUP

The number of times associations are unavailable for User Part (UP) traffic.

Data Source

SGSN

Source Field

ss7AssocUnavlForUP

Source Section

M3UA Management

© Copyright IBM Corp. 2008, 2009. All Rights Reserved.

ss7MessageDiscardedOPCScreening

The number of discarded MSU packets received. The packets are discarded by the Originating Point Code (OPC) screening when the received OPC is not accepted. The ss7M3MSUDiscardedOPCScreening event includes both the received OPC and the adjacent DPC.

Data Source

SGSN

Source Field

ss7MessageDiscardedOPCScreening

Source Section

SS7 TCAP Layer

ss7MessageOrigUDT

The total number of unit data (UDT) messages originated per class and source.

Data Source

SGSN

Source Field

ss7MessageOrigUDT

Source Section

SS7 SCCP Layer

ss7MessageOrigXUDT

The total number of extended unit data (XUDT) messages originated per class and source.

Data Source

SGSN

Source Field

ss7MessageOrigXUDT

Source Section

SS7 SCCP Layer

ss7MessageTermUDT

The total number of UDT messages terminated per class and sink.

Data Source

SGSN

Source Field

ss7MessageTermUDT

Source Section

SS7 SCCP Layer

ss7MessageTermXUDT

The total number of XUDT messages, that are terminated.

Data Source

SGSN

Source Field

ss7MessageTermXUDT

Source Section

SS7 SCCP Layer

ss7MSUDiscardError

The message signaling unit (MSU) is discarded due to routing data error.

Data Source

SGSN

Source Field

ss7MSUDiscardError

Source Section

SS7 MTP Layer

ss7ProtocolErrorComp

A protocol error is detected in component portion.

© Copyright IBM Corp. 2008, 2009. All Rights Reserved.

Data Source

SGSN

Source Field

ss7ProtocolErrorComp

Source Section

SS7 TCAP Layer

ss7ProtocolErrorTraA

A protocol error has occurred, since P-abort is unrecognized transaction identity (TID).

Data Source

SGSN

Source Field

ss7ProtocolErrorTraA

Source Section

SS7 TCAP Layer

ss7ProtocolErrorTraD

A protocol error has occurred, since P-abort is unrecognized message type.

Data Source

SGSN

Source Field

ss7ProtocolErrorTraD

Source Section

SS7 TCAP Layer

ss7SLFailure

Retired fr 5.0.10.0.0-Signaling link (SL) failure is detected.

Data Source

SGSN

Source Field

ss7SLFailure

Source Section

SS7 MTP Layer

ss7SLRestoration

Retired fr 5.0.10.0.0-SL restoration has occurred.

Data Source

SGSN

Source Field

ss7SLRestoration

Source Section

SS7 MTP Layer

ss7SPInaccess

The adjacent signaling point (SP) is inaccessible.

Data Source

SGSN

Source Field

ss7SPInaccess

Source Section

SS7 MTP Layer

ss7TCMessageReceive

The total number of TC messages received by the stack.

Data Source

SGSN

Source Field

ss7TCMessageReceive

© Copyright IBM Corp. 2008, 2009. All Rights Reserved.

Source Section

SS7 TCAP Layer

ss7TCMessageSent

The total number of transaction capability (TC) messages sent by the stack.

Data Source

SGSN

Source Field

ss7TCMessageSent

Source Section

SS7 TCAP Layer

subscribersInTransitionalState

Gauge for Subscribers in Transitional State

Data Source

SGSN

Source Field

subscribersInTransitionalState

Source Section

ISP

succActPdpContextDynMsPerSgsn

Number of successfully completed PDP context activations where a dynamic PDP address is used.

Data Source

SGSN

Source Field

succActPdpContextDynMsPerSgsn

Source Section

GPRS Session Management

succActPdpContextMSPerSgsn

Number of successfully completed PDP context activations

Data Source

SGSN

Source Field

succActPdpContextMSPerSgsn

Source Section

GPRS Session Management

succAuthInSgsn

Number of successful authentication procedures within this SGSN area.

Data Source

SGSN

Source Field

succAuthInSgsn

Source Section

Security

succCombiAttach

The counter is incremented when sending Attach Accept indicating Combined GPRS/IMSI Attach to an MS

Data Source

SGSN

Source Field

succCombiAttach

© Copyright IBM Corp. 2008, 2009. All Rights Reserved.

Source Section

GPRS Mobility Management

succGprsAttach

The counter is incremented when sending Attach Accept indicating GPRS Only Attach to an MS

Data Source

SGSN

Source Field

succGprsAttach

Source Section

GPRS Mobility Management

succGprsAttachUmts

The number of successful GPRS attaches.

Data Source

SGSN

Source Field

succGprsAttachUmts

Source Section

Mobility Management

succGprsAttachVisitor

This measurement provides the number of successfully performed GPRS attach procedures within this SGSN area, initiated by visiting GPRS subscribers. Visiting subscribers are defined by the roaming status parameter in the IMSI number series configuration. If the SGSN resends an Attach Accept message to the MS, the counter is not incremented. If the SGSN receives an Attach Request message indicating Combined GPRS or IMSI Attach and the IMSI (CS) Attach did fail whereas the GPRS Attach was successful, the counter is not incremented.

Data Source

SGSN

Source Field

succGprsAttachVisitor

Source Section

Mobility Management

succGprsDetachSgsn

The counter is not incremented if Detach Accept is not received after the last re-transmission of Detach Request

Data Source

SGSN

Source Field

succGprsDetachSgsn

Source Section

GPRS Mobility Management

succGprsDetachSgsnUmts

The number of successful GPRS detaches initiated by the SGSN.

Data Source

SGSN

Source Field

succGprsDetachSgsnUmts

Source Section

Mobility Management

succIdentityReq

Incremented at reception of an Identity Response message with the requested identity for example IMSI and IMEI from the MS.

Data Source

SGSN

© Copyright IBM Corp. 2008, 2009. All Rights Reserved.

Source Field

succIdentityReq

Source Section

Security

succImsiAttach

The counter is incremented when sending Attach Accept indicating GPRS Attach while IMSI Attached to an MS

Data Source

SGSN

Source Field

succImsiAttach

Source Section

GPRS Mobility Management

succInterSgsnRaUpdate

The counter is incremented when receiving RA Update Complete from an MS

Data Source

SGSN

Source Field

succInterSgsnRaUpdate

Source Section

GPRS Mobility Management

succInterSgsnRaUpdateUmts

The number of successful inter-SGSN RA updates.

Data Source

SGSN

Source Field

succInterSgsnRaUpdateUmts

Source Section

Mobility Management

succInterSgsnRaUpdateVisitor

This measurement provides the number of successfully completed inter-SGSN RAU procedures initiated by visiting GPRS subscribers within this SGSN area. Visiting subscribers are defined by the roaming status parameter in the IMSI number series configuration.

Data Source

SGSN

Source Field

succInterSgsnRaUpdateVisitor

Source Section

Mobility Management

succIntraSgsnRaUpdate

The counter is incremented when sending RA Update Accept to an MS. The counter is not stepped when re-sending RA Update Accept to the MS

Data Source

SGSN

Source Field

succIntraSgsnRaUpdate

Source Section

GPRS Mobility Management

succIntraSgsnRaUpdateUmts

The number of successful intra-SGSN RA update procedures.

Data Source

SGSN

© Copyright IBM Corp. 2008, 2009. All Rights Reserved.

Source Field

succIntraSgsnRaUpdateUmts

Source Section

Mobility Management

succPacketSwitchingPagingUmts

The number of successful PS paging procedures.

Data Source

SGSN

Source Field

succPacketSwitchingPagingUmts

Source Section

Mobility Management

succReqAuthSetsHlr

Number of successful requests for authentication sets that were sent from the HLR to the SGSN.

Data Source

SGSN

Source Field

succReqAuthSetsHlr

Source Section

Security

SYSPayloadAllocationFailureG

This measurement provides the number of deleted IP packets due to memory allocation failure.

Data Source

SGSN

Source Field

SYS.PayloadAllocationFailure.G

Source Section

System Resource

SYSPayloadAllocationFailureU

This measurement provides the number of deleted IP packets due to memory allocation failure.

Data Source

SGSN

Source Field

SYS.PayloadAllocationFailure.U

Source Section

System Resource

unsuccGprsAttachUmts

The number of unsuccessful GPRS attach requests, that is, the number of reject messages sent.

Data Source

SGSN

Source Field

unsuccGprsAttachUmts

Source Section

Mobility Management

unsuccPacketSwitchingPaging

Number of unsuccessful packet switched paging (GPRS) procedures within this SGSN area. R7: The measurement type is now changed to a supervised counter. Supervision is true by default.

Data Source

SGSN

Source Field

unsuccPacketSwitchingPaging

© Copyright IBM Corp. 2008, 2009. All Rights Reserved.

Source Section

Radio Resource Management

unsuccPacketSwitchPagingUmts

The number of unsuccessful PS paging procedures.

Data Source

SGSN

Source Field

unsuccPacketSwitchingPagingUmts

Source Section

Mobility Management

uplinkSndcpNpduReceived

The number of incoming N-PDUs received by the SNDCP protocol layer.

Data Source

SGSN

Source Field

uplinkSndcpNpduReceived

Source Section

SNDCP

uplinkSndcpOctetReceivedMode

The number of octets in incoming N-PDUs received by the SNDCP protocol layer (kOctets, 1024 octets)

Data Source

SGSN

Source Field

uplinkSndcpOctetReceivedMode

Source Section

SNDCP

GSN_MM_Index Primitive Calculations

The following is a list of primitive calculations for the GSN_MM_Index entity.

GRAPHmultiLineSeparator

Special Control Field for Multi-Line Graphs

Calculation

```
""
```

NUMDAYS

of days in Report

Calculation

```
DAYSINREPORT()
```

NUMHOURS

of hours in Summation Data

Calculation

UnknownEnterpriseField

Unknown Field exported from Enterprise Server

Calculation

```
nullInt()
```

GSN_MM_Index Peg Counts

The following is a list of peg counts for the GSN_MM_Index entity.

AttGprsAttachG

Number of attempted GPRS attach procedures initiated within this SGSN area

Data Source

SGSN

© Copyright IBM Corp. 2008, 2009. All Rights Reserved.

Source Field

MM.AttGprsAttach.G

Source Section

Mobility Management for GSN

AttGprsDetachMsG

Number of MS initiated GPRS detach procedures within this SGSN area

Data Source

SGSN

Source Field

MM.AttGprsDetachMs.G

Source Section

Mobility Management for GSN

AttInterSgsnRaUpdateG

Number of attempted inter-SGSN Routing Area Update procedures initiated in this SGSN

Data Source

SGSN

Source Field

MM.AttInterSgsnRaUpdate.G

Source Section

Mobility Management for GSN

AttIntraSgsnRaUpdateG

Number of attempted Intra-SGSN Routing Area Update procedures initiated within this SGSN area

Data Source

SGSN

Source Field

MM.AttIntraSgsnRaUpdate.G

Source Section

Mobility Management for GSN

collectionPeriod

Collection period in seconds

Data Source

SGSN

GSNRelease

Release of GSN

Data Source

SGSN

MMAttCombiInterSgsnRaUpdateG

The number of combined RA/LA updates (inter SGSN) procedures initiated in the SGSN.

Data Source

SGSN

Source Field

MM.AttCombiInterSgsnRaUpdate.G

Source Section

Mobility Management Indexing

MMAttCombiIntraSgsnRaUpdateG

The number of combined RA/LA updates (intra-SGSN) procedures initiated in the SGSN.

Data Source

SGSN

Source Field

MM.AttCombiIntraSgsnRaUpdate.G

© Copyright IBM Corp. 2008, 2009. All Rights Reserved.

Source Section

Mobility Management Indexing

MMAttGprsAttachU

Attempted GPRS attach procedures initiated in this SGSN area (R5.5)

Data Source

SGSN

Source Field

MM.AttGprsAttach.U

MMAttGprsDetachMsU

Number of attempted GPRS detach procedures initiated by MS in this SGSN area (R5.5)

Data Source

SGSN

Source Field

MM.AttGprsDetachMs.U

MMAttGprsDetachSgsnG

The number of attempted GPRS detach procedures initiated by SGSN.

Data Source

SGSN

Source Field

MM.AttGprsDetachSgsn.G

MMAttGprsDetachSgsnU

Number of attempted GPRS detach procedures initiated by SGSN (R5.5)

Data Source

SGSN

Source Field

MM.AttGprsDetachSgsn.U

MMAttImsiCombiInterSgsnRAUpdaG

The number of combined RA/LA updates with IMSI attach (inter SGSN) procedures initiated in the SGSN.

Data Source

SGSN

Source Field

MM.AttImsiCombiInterSgsnRAUpdate.G

Source Section

Mobility Management Indexing

MMAttImsiCombiIntraSgsnRAUpdaG

The number of combined RA/LA updates with IMSI attach (intra SGSN) procedures initiated in the SGSN.

Data Source

SGSN

Source Field

MM.AttImsiCombiIntraSgsnRAUpdate.G

Source Section

Mobility Management Indexing

MMAttInterSgsnRaUpdateU

No of att inter-SGSN Routing Area Update procedures initiated in this SGSN area (R5.5)

Data Source

SGSN

Source Field

MM.AttInterSgsnRaUpdate.U

MMAttIntraSgsnRaUpdateU

Attempted intra-SGSN Routing Area Update procedures initiated in this SGSN area (R5.5)

© Copyright IBM Corp. 2008, 2009. All Rights Reserved.

Data Source

SGSN

Source Field

MM.AttIntraSgsnRaUpdate.U

MMAttNormalIntraSgsnRaUpdateG

The number of attempted normal intra-SGSN RA Update procedures initiated in this SGSN. Periodic RA updates are not counted. Resending from MSs are also counted.

Data Source

SGSN

Source Field

MM.AttNormalIntraSgsnRaUpdate.G

Source Section

Mobility Management Indexing

MMAttNormalIntraSgsnRaUpdateU

The number of attempted normal intra-SGSN RA Update procedures initiated in this UMTS SGSN. Periodic RA updates are not counted. Resending from MSs are also counted.

Data Source

SGSN

Source Field

MM.AttNormalIntraSgsnRaUpdate.U

Source Section

Mobility Management Indexing

MMAttPsPagingProcGb

The total number of Packet-Switched (PS) paging procedures that are initiated at the SGSN, over the Gb interface. A paging procedure means that the counter is incremented once when sending the first set of paging (that is 3 paging messages with new P-TMSI

Data Source

SGSN

Source Field

MM.AttPsPagingProcGb

Source Section

Mobility Management Indexing

MMAttPsPagingProcIu

The total number of PS paging procedures that are initiated at the SGSN, over the Iu interface. A paging procedure means that the counter is incremented once when sending the first set of paging (that is 3 paging messages with new P-TMSI and possibly 2 pa

Data Source

SGSN

Source Field

MM.AttPsPagingProcIu

Source Section

Mobility Management Indexing

MMNbrActAttachedSubRAG

The number of attached subscribers per RA within this SGSN. Default Alarm Triggering Level: 90% of the limit for attached subscribers depending on HW and the size of the scalable SGSN. Default Alarm Clearing Level: 85% of the limit for ttached subscribers depending on HW and the size of the scalable SGSN. Severity: Minor Default Supervision Active: True

Data Source

SGSN

Source Field

MM.NbrActAttachedSUbRA.G

Source Section

Mobility Management Indexing

MMNbrActAttachedSubRAU

The number of attached subscribers per RA within this SGSN. Default Alarm Triggering Level: 90% of the limit for attached subscribers depending on HW and the size of the scalable SGSN. Default Alarm Clearing Level: 85% of the limit for attached subscribers depending on HW and the size of the scalable SGSN. Severity: Minor Default Supervision Active: False

© Copyright IBM Corp. 2008, 2009. All Rights Reserved.

Data Source

SGSN

Source Field

MM.NbrActAttachedSUbRA.U

Source Section

Mobility Management Indexing

MMSuccCombiInterSgsnRaUpdateG

The number of successfully performed combined RA/LA updates (inter SGSN) procedures initiated in the SGSN.

Data Source

SGSN

Source Field

MM.SuccCombiInterSgsnRaUpdate.G

Source Section

Mobility Management Indexing

MMSuccCombiIntraSgsnRaUpdateG

The number of successfully performed combined RA/LA updates (intra SGSN) procedures initiated in the SGSN.

Data Source

SGSN

Source Field

MM.SuccCombiIntraSgsnRaUpdate.G

Source Section

Mobility Management Indexing

MMSuccFirstPsPagingGb

The number of successful first paging messages in the Packet-Switched (PS) paging procedure.

Data Source

SGSN

Source Field

MM.SuccFirstPsPagingGb

Source Section

Mobility Management

MMSuccGprsAttachU

Successful GPRS attach procedures initiated in this SGSN area (R5.5)

Data Source

SGSN

Source Field

MM.SuccGprsAttach.U

MMSuccGprsDetachSgsnG

The number of successfully completed SGSN-initiated GPRS detach procedures within this SGSN area.

Data Source

SGSN

Source Field

MM.SuccGprsDetachSgsn.G

Source Section

Mobility Management Indexing

MMSuccGprsDetachSgsnU

The number of successfully completed SGSN-initiated GPRS detach procedures within this SGSN area.

Data Source

SGSN

© Copyright IBM Corp. 2008, 2009. All Rights Reserved.

Source Field

MM.SuccGprsDetachSgsn.U

Source Section

Mobility Management Indexing

MMSuccInterSgsnRaUpdateU

No of succ comp inter-SGSN Routing Area Update Proc initiated in this SGSN area (R5.5)

Data Source

SGSN

Source Field

MM.SuccInterSgsnRaUpdate.U

MMSuccIntraSgsnRaUpdateU

Successful intra-SGSN Routing Area Update procedure initiated in this SGSN area (R5.5)

Data Source

SGSN

Source Field

MM.SuccIntraSgsnRaUpdate.U

MMSuccNormalIntraSgsnRaUpdateG

The number of successfully performed normal intra-SGSN Routing Area Update procedures initiated in this SGSN. Periodic RA Updates and RA Updates acting as resume of a suspended MS are not counted. The counter is not stepped when resending RA Update Accept to the MS.

Data Source

SGSN

Source Field

MM.SuccNormalIntraSgsnRaUpdate.G

Source Section

Mobility Management Indexing

MMSuccNormalIntraSgsnRaUpdateU

The number of successfully performed normal intra-SGSN RA Update procedures initiated in this SGSN. Periodic RA updates and RA updates acting as resume of a suspended MS are not counted. The counter is not stepped when resending RA Update Accept to the MS.

Data Source

SGSN

Source Field

MM.SuccNormalIntraSgsnRaUpdate.U

Source Section

Mobility Management Indexing

MMSuccPsPagingProcGb

The total number of successful PS paging procedures that are initiated at the SGSN, over the Gb interface.

Data Source

SGSN

Source Field

MM.SuccPsPagingProcGb

MMSuccPsPagingProcIu

The total number of successful PS paging procedures that are initiated at the SGSN, over the Iu interface.

Data Source

SGSN

Source Field

MM.SuccPsPagingProcIu

SuccGprsAttachG

Number of successfully performed GPRS attach procedures within this SGSN area

Data Source

SGSN

© Copyright IBM Corp. 2008, 2009. All Rights Reserved.

Source Field

MM.SuccGprsAttach.G

Source Section

Mobility Management for GSN

SuccInterSgsnRaUpdateG

Nnumber of successfully completed inter-SGSN Routing Area Update procedures in this SGSN

Data Source

SGSN

Source Field

MM.SuccInterSgsnRaUpdate.G

Source Section

Mobility Management for GSN

SuccIntraSgsnRaUpdateG

Number of successfully performed Intra-SGSN Routing Area Update procedures initiated in this SGSN

Data Source

SGSN

Source Field

MM.SuccIntraSgsnRaUpdate.G

Source Section

Mobility Management for GSN

GSN_OvrProtect Primitive Calculations

The following is a list of primitive calculations for the GSN_OvrProtect entity.

GRAPHmultiLineSeparator

Special Control Field for Multi-Line Graphs

Calculation

```
""
```

NUMDAYS

of days in Report

Calculation

```
DAYSINREPORT()
```

NUMHOURS

of hours in Summation Data

Calculation

UnknownEnterpriseField

Unknown Field exported from Enterprise Server

Calculation

```
nullInt()
```

GSN_OvrProtect Peg Counts

The following is a list of peg counts for the GSN_OvrProtect entity.

collectionPeriod

Collection period in seconds

Data Source

SGSN

gsnOverloadProtectionSs7MessageReject

The counter is incremented when an outgoing request through SS7 link is rejected. SCCP messages are discarded. TCAP messages are rejected with reject message

Data Source

SGSN

Source Field

gsnOverloadProtectionSs7MessageReject

© Copyright IBM Corp. 2008, 2009. All Rights Reserved.

Source Section

GSN Overload Protection

GSNRelease

Release of GSN

Data Source

SGSN

GSN_SM_Index Primitive Calculations

The following is a list of primitive calculations for the GSN_SM_Index entity.

GRAPHmultiLineSeparator

Special Control Field for Multi-Line Graphs

Calculation

```
""
```

NUMDAYS

of days in Report

Calculation

```
DAYSINREPORT()
```

NUMHOURS

of hours in Summation Data

Calculation

GSN_SM_Index Peg Counts

The following is a list of peg counts for the GSN_SM_Index entity.

collectionPeriod

Collection period in seconds

Data Source

SGSN

Source Field

granularity period (gp)

GSNRelease

Release of GSN

Data Source

SGSN

Source Field

showelements.Release

SMAttActPdpContextRaG

The number of attempted primary PDP context activation procedures per RA within the SGSN.

Data Source

SGSN

Source Field

SM.AttActPdpContextRa.G

Source Section

Session Management

SMAttActPdpContextRaU

This measurement provides the number of attempted primary PDP context activation procedures per RA within this SGSN. These include the static as well as the dynamic PDP addresses. The counter is incremented as the SGSN identifies the message as a RIL3 Activate PDP Context Request message.

Data Source

SGSN

Source Field

SM.AttActPdpContextRa.U

Source Section

Session Management

© Copyright IBM Corp. 2008, 2009. All Rights Reserved.

SMSuccActPdpContextRaG

The number of successfully completed primary PDP context activations per RA within the SGSN.

Data Source

SGSN

Source Field

SM.SuccActPdpContextRa.G

Source Section

Session Management

SMSuccActPdpContextRaU

This measurement provides the number of successfully completed primary PDP context activations per RA within this SGSN. For these context activations, the GGSN is updated successfully.

Data Source

SGSN

Source Field

SM.SuccActPdpContextRa.U

Source Section

Session Management

GSNType Primitive Calculations

The following is a list of primitive calculations for the GSNType entity.

GRAPHmultiLineSeparator

Special Control Field for Multi-Line Graphs

Calculation

""

NUMDAYS

of days in Report

Updated: 2009-07-22

Calculation

```
DAYSINREPORT()
```

NUMHOURS

of hours in Summation Data

Calculation

UnknownEnterpriseField

Unknown Field exported from Enterprise Server

Calculation

```
nullInt()
```

Interface Primitive Calculations

The following is a list of primitive calculations for the Interface entity.

ATMAAL5LenErrPkts

Ratio of packets droped because there their length was incorrect to total dropped Packets in percent

Calculation

```
( jnxAtmIfInLenErrPkts * 100.0 ) / ( 1.0 * vsum( jnxAtmIfInNoBufDropPkts,
jnxAtmIfOutVCQueueDrops,  jnxAtmIfInNoBufDropPkts,  jnxAtmIfInLenErrPkts )
)
```

ATMAAL5NoBufDropPktsRate

Ratio of packets droped because there was no enough buffer to handle them to tottal dropped Packets in percent

Calculation

```
( jnxAtmIfInNoBufDropPkts * 100.0 ) / ( 1.0 * vsum( jnxAtmIfInNoBufDropP-
kts,  jnxAtmIfOutVCQueueDrops,  jnxAtmIfInNoBufDropPkts,  jnxAtmIfInLenEr-
rPkts ) )
```

ATMAAL5TimeoutPkts

Ratio of packets droped because reassembly timeout to tottal dropped Packets in percent

Calculation

```
( jnxAtmIfInTimeoutPkts * 100.0 ) / ( 1.0 * vsum(jnxAtmIfInTimeoutPkts,
jnxAtmIfInNoBufDropPkts,  jnxAtmIfOutVCQueueDrops,  jnxAtmIfInNoBufDropP-
kts, jnxAtmIfInLenErrPkts ) )
```

© Copyright IBM Corp. 2008, 2009. All Rights Reserved.

ATMAAL5VCQueueDropsPktsRate

Ratio of packets droped because of queue limits on each VC to tottal dropped Packets in percent

Calculation

```
( jnxAtmIfOutVCQueueDrops * 100.0 ) / ( 1.0 * vsum( jnxAtmIfInNoBufDropP-
kts,  jnxAtmIfOutVCQueueDrops,  jnxAtmIfInNoBufDropPkts,  jnxAtmIfInLenEr-
rPkts ) )
```

ATMavgPktsSizeIn

Ratio of the number of bytes received to number of packets on this VC

Calculation

```
AGGR(VirtualPath.VirtualChannel, jnxAtmVCInBytes)  / AGGR(VirtualPath.Vir-
tualChannel, jnxAtmVCInPkts)
```

ATMavgPktsSizeOut

Ratio of the number of bytes Transmitted to number of packets on this VC

Calculation

```
AGGR(VirtualPath.VirtualChannel, jnxAtmVCOutBytes) / AGGR(VirtualPath.Vir-
tualChannel, jnxAtmVCOutPkts)
```

ATMHeaderCheckSeqCorrRate

ATM Cell Header Check Correction Rate is the Ratio between the number of correctable cell Header Check Sequence (HCS) Errors and the sum of correctable and uncooecteble HCS Errors that occurred in Procent.

Calculation

```
( jnxAtmIfCorrHCSErrs * 100.0 ) / ( 1.0 * vsum ( jnxAtmIfCorrHCSErrs, jnx-
AtmIfUncorrHCSErrs ) )
```

ATMHeaderCheckUnCorrErrRate

ATM Cell Header Check Uncorrectable Error Rate is the ratio Between the number Cells with uncorrectable HCS errors to total number of received Cells

Calculation

```
( jnxAtmIfUncorrHCSErrs * 100.0 ) / ( 1.0 * jnxAtmIfRxCellCount )
```

ATMIdelCellRate

ATM Idle Cell rate is the ratio between number of Idle Cells and total number of transmmited Cells in Procent . This is an indication of Utilization. Beacause when the Interface has noting to send It sends Idle Cells.

Calculation

```
( jnxAtmIfTxIdleCellCount * 100.0 )  / ( 1.0 * jnxAtmIfTxCellCount )
```

ATMNoBufferOAMFailRate

ATM No Buffer OAM Failure Rate is the ratio between dopped OAM and raw cells to total

Calculation

```
( jnxAtmIfInNoBufferOAMCells * 100.0 ) / ( 1.0 * jnxAtmIfRxCellCount  )
```

ATMoverrunFIFORecieveRate

ATM Overrun FIFO Recieve Rate is the ratio Output FIFO Overruns and total Transmit cells in procent. Input errors indicating that the input queue overflowed while copying received cells.

Calculation

```
( jnxAtmIfRxCellFIFOOverRuns * 100.0 ) / ( 1.0 * jnxAtmIfRxCellCount)
```

ATMoverrunFIFOTransmitRate

ATM Overrun FIFO Transmit Rate is the ratio Output FIFO Overruns and total Transmit cells in procent are output errors indicating that the Output queue overflowed while copying received frames.

Calculation

```
( jnxAtmIfTxCellFIFOOverRuns * 100.0 )  / ( 1.0 * jnxAtmIfTxCellCount)
```

ATMTotalAAL5PacketsDropped

Total Number of AAl5 Dropped because of reassembly timeout,length was incorrect,queue limits on each VC, ,no enough buffer to handle them.

Calculation

```
( vsum (jnxAtmIfInNoBufDropPkts,  jnxAtmIfOutVCQueueDrops,  jnxAtmIfInNo-
BufDropPkts,  jnxAtmIfInLenErrPkts ) )
```

ATMunderrunFIFORecieveRate

ATM Underrun FIFO Receive rate is the rate that the transmitter has been running faster than the interface can handle.

Calculation

```
( jnxAtmIfRxCellFIFOUnderRuns * 100.0 ) / ( 1.0 *  jnxAtmIfRxCellCount)
```

ATMVCTailQueuePktDropRate

Ratio of the number of packets dropped due to bandwidth constraints to total Packets Out on this VC in Percent. This is an Indication that packets were queued to send out at a rate faster than allowed.

© Copyright IBM Corp. 2008, 2009. All Rights Reserved.

Calculation

```
AGGR(VirtualPath.VirtualChannel, jnxAtmVCTailQueuePktDrops) * 100.0  /
AGGR(VirtualPath.VirtualChannel, jnxAtmVCOutPkts)
```

ATMVirtuConnecFailRate

ATM Virtual Connection Failure rate is ratio of cells that received with no existing virtual connection to the total number of Received Packets.

Calculation

```
( jnxAtmIfInInvalidVCCells * 100.0 )  / ( 1.0 * jnxAtmIfRxCellCount )
```

GRAPHmultiLineSeparator

Special Control Field for Multi-Line Graphs

Calculation

```
""
```

IfAccuracy

Interface accuracy can be expressed by the ratio of the packets that does not result in an error to the total packets

Calculation

```
( vsum (100, -1 * jnxifInErrors * 100.0) )  / ( 1.0 * vsum( jnxifInUcastP-
kts, jnxifInMulticastPkts, jnxifInBroadcastPkts) )
```

ifInDiscardRate

Rate of incoming packets discarded on an interface

Calculation

```
( jnxifInDiscards * 100.0 ) / ( 1.0 * vsum(jnxifInUcastPkts, jnxifInMulti-
castPkts, jnxifInBroadcastPkts, jnxifInDiscards, jnxifInErrors,jnxifInUn-
knownProtos) )
```

ifInErrorsRate

Ratio of incoming errored packets to total packets

Calculation

```
( jnxifInErrors * 100.0 )  / ( 1.0 * vsum(jnxifInUcastPkts, jnxifInMulti-
castPkts, jnxifInBroadcastPkts, jnxifInDiscards, jnxifInErrors,jnxifInUn-
knownProtos) )
```

ifInPkts

The total nr of packets, delivered by this sub-layer to a higher (sub-)layer (All CPUs)

Calculation

```
vsum(ifInPkts_CPU2, ifInPkts_CPU3, ifInPkts_CPU4)
```

ifOutDiscardRate

Rate of outgoing packets discarded on an interface

Calculation

```
( jnxifOutDiscards * 100.0 ) / ( 1.0 * vsum(jnxifOutUcastPkts, jnxifOutMul-
ticastPkts, jnxifOutBroadcastPkts, jnxifOutDiscards, jnxifOutErrors, jnxi-
fInUnknownProtos) )
```

ifOutErrorsRate

Rate of outgoing errored packets

Calculation

```
( jnxifOutErrors * 100.0 )  / ( vsum( jnxifOutUcastPkts, jnxifOutMulticast-
Pkts, jnxifOutBroadcastPkts, jnxifOutDiscards, jnxifOutErrors) )
```

ifOutPkts

The total nr of packets that higher-level protocols requested to be transmitted (All CPUs)

Calculation

```
vsum(ifOutPkts_CPU2, ifOutPkts_CPU3, ifOutPkts_CPU4)
```

InterfaceBalance_GSN

Interface balance outgoing divided by incoming traffic %

Calculation

```
(ifOutOctets_CPU2 + ifOutOctets_CPU3 + ifOutOctets_CPU4) * 100.0 /
(ifInOctets_CPU2 + ifInOctets_CPU3 + ifInOctets_CPU4)
```

InterfaceGOS

Dimensioned Grade of Service

Calculation

InterfaceThrouputRx

Interface input is the total number of octets transmitted out of the interface, including framing characters in 15 minutes in Kbytes/s

Calculation

```
(ifInOctets * 1.0) / (collectionPeriod * 60.0)
```

© Copyright IBM Corp. 2008, 2009. All Rights Reserved.

InterfaceThrouputRx_GSN

Interface input is the total number of octets/s transmitted out of the interface

Calculation

```
(ifInOctets_CPU2 + ifInOctets_CPU3 + ifInOctets_CPU4) / ( collectionPeriod
* 1.0)
```

InterfaceThrouputTx

Interface output of interface is the total number of octets transmitted out of the interface, including framing characters in 15 minutes in Kbytes/s

Calculation

```
(ifOutOctets * 1.0) / (collectionPeriod * 60.0)
```

InterfaceThrouputTx_GSN

Interface outp of interface is the tot nr of octets/s transm out of the interface

Calculation

```
(ifOutOctets_CPU2 + ifOutOctets_CPU3 + ifOutOctets_CPU4) / (collectionPe-
riod * 1.0)
```

NUMDAYS

of days in Report

Calculation

```
DAYSINREPORT()
```

NUMHOURS

of hours in Summation Data

Calculation

PacketDiscardRate_GSN

Packet Discard Rate shows the ratio of discarded packets %

Calculation

```
(ifOutDiscards_CPU2 + ifOutDiscards_CPU3 + ifOutDiscards_CPU4) * 100.0 /
(ifOutPkts_CPU2 + ifOutPkts_CPU3 + ifOutPkts_CPU4)
```

pInUtilization

Interface Utilization is an indication of the general performance of the interface.

Calculation

```
ifOutOctets * 100.0 / ifInOctets
```

pPktDis

Packet Discard Rate shows the ratio of discarded packets to delivered packets.

Calculation

```
(ifOutDiscards * 100.0) / vsum(ifInUcastPkts, ifInPkts_CPU2, ifInPkts_CPU3,
ifInPkts_CPU4, -1 * ifOutDiscards, -1 * ifOutQlen)
```

pPktQue

Packet Queued Rate shows the ratio of queued packets to delivered packets.

Calculation

```
(ifOutQlen * 100.0) / vsum(ifInUcastPkts, ifInPkts_CPU2, ifInPkts_CPU3,
ifInPkts_CPU4, -1 * ifOutDiscards, -1 * ifOutQlen)
```

UnknownEnterpriseField

Unknown Field exported from Enterprise Server

Calculation

```
nullInt()
```

Interface Peg Counts

The following is a list of peg counts for the Interface entity.

collectionPeriod

GPRS General

Data Source

SGSN

collectionPeriod_SNMP_GGSN

Period Length

Data Source

GGSN

Source Field

collectionPeriod_SNMP_GGSN

© Copyright IBM Corp. 2008, 2009. All Rights Reserved.

Source Section

Interface General

filterIpsecPackets_IPSecFilter_in_21

Number of packets classified as IPsec by filter, type 5 in.

Data Source

SGSN

Source Field

filterIpsecPackets

Source Section

IP Filtering Interface/SA

filterIpsecPackets_IPSecFilter_out_21

Number of packets classified as IPsec by filter, type 5 out.

Data Source

SGSN

Source Field

filterIpsecPackets

Source Section

IP Filtering Interface/SA

filterIpsecPackets_normalFilter_in_21

Number of packets classified as IPsec by filter, type 2 in.

Data Source

SGSN

Source Field

filterIpsecPackets

Source Section

IP Filtering Interface/SA

filterIpsecPackets_normalFilter_out_21

Number of packets classified as IPsec by filter, type 2 out.

Data Source

SGSN

Source Field

filterIpsecPackets

Source Section

IP Filtering Interface/SA

filterPacketsAllowed_IPSecFilter_in_21

Number of packets allowed by filter, type 5 in.

Data Source

SGSN

Source Field

filterPacketsAllowed

Source Section

IP Filtering Interface/SA

filterPacketsAllowed_IPSecFilter_out_21

Number of packets allowed by filter, type 5 out.

Data Source

SGSN

Source Field

filterPacketsAllowed

Source Section

IP Filtering Interface/SA

filterPacketsAllowed_normalFilter_in_21

Number of packets allowed by filter, type 2 in.

© Copyright IBM Corp. 2008, 2009. All Rights Reserved.

Data Source

SGSN

Source Field

filterPacketsAllowed

Source Section

IP Filtering Interface/SA

filterPacketsAllowed_normalFilter_out_21

Number of packets allowed by filter, type 2 out.

Data Source

SGSN

Source Field

filterPacketsAllowed

Source Section

IP Filtering Interface/SA

filterPacketsDenied_IPSecFilter_in_21

Number of packets denied by filter, type 5 in.

Data Source

SGSN

Source Field

filterPacketsDenied

Source Section

IP Filtering Interface/SA

filterPacketsDenied_IPSecFilter_out_21

Number of packets denied by filter, type 5 out.

Data Source

SGSN

Source Field

filterPacketsDenied

Source Section

IP Filtering Interface/SA

filterPacketsDenied_normalFilter_in_21

Number of packets denied by filter, type 2 in.

Data Source

SGSN

Source Field

filterPacketsDenied

Source Section

IP Filtering Interface/SA

filterPacketsDenied_normalFilter_out_21

Number of packets denied by filter, type 2 out.

Data Source

SGSN

Source Field

filterPacketsDenied

Source Section

IP Filtering Interface/SA

GSNRelease

Release of GSN

Data Source

SGSN

© Copyright IBM Corp. 2008, 2009. All Rights Reserved.

ifChassisChannel

The channel identifier for the specified interface if and only if it is part of a channelized interface. For the interface which could not be channelized, this object returns zero.

Data Source

GGSN

Source Field

ifChassisChannel

Source Section

ifChassisEntry

ifChassisLogicalUnit

The logical unit number of the specified interface.

Data Source

GGSN

Source Field

ifChassisLogicalUnit

Source Section

ifChassisEntry

ifInDiscards

The number of inbound IP packets dropped in the Ethernet driver due to lack of resources.

Data Source

SGSN

Source Field

ifInDiscards

Source Section

IP Interface

ifInOctets

The total number of octets received on the interface, including framing characters.

Data Source

SGSN

Source Field

ifInOctets

Source Section

IP Interface

ifInOctets_CPU2

The total number of octets received on the interface, including framing characters, cpu 2.

Data Source

SGSN

Source Field

ifInOctets

Source Section

IP Interface

ifInOctets_CPU3

The total number of octets received on the interface, including framing characters, cpu 3.

Data Source

SGSN

Source Field

ifInOctets

Source Section

IP Interface

ifInOctets_CPU4

The total number of octets received on the interface, including framing characters, cpu 4.

© Copyright IBM Corp. 2008, 2009. All Rights Reserved.

Data Source

SGSN

Source Field

ifInOctets

Source Section

IP Interface

ifInPkts_CPU2

The total number of packets, delivered by this sub-layer to a higher (sub-)layer, cpu 2.

Data Source

SGSN

Source Field

ifInPkts

Source Section

IP Interface

ifInPkts_CPU3

The total number of packets, delivered by this sub-layer to a higher (sub-)layer, cpu 3.

Data Source

SGSN

Source Field

ifInPkts

Source Section

IP Interface

ifInPkts_CPU4

The total number of packets, delivered by this sub-layer to a higher (sub-)layer, cpu 4.

Data Source

SGSN

Source Field

ifInPkts

Source Section

IP Interface

ifInUcastPkts

The total number of packets, delivered by this sub-layer to a higher (sub-)layer.

Data Source

SGSN

Source Field

ifInUcastPkts

Source Section

IP Interface

ifOutDiscards

The number of outbound packets which were chosen to be discarded even though no errors had been detected to prevent their being transmitted. R7: The number of outbound packets dropped in the Ethernet driver due to lack of resources

Data Source

SGSN

Source Field

ifOutDiscards

Source Section

IP Interface

ifOutDiscards_CPU2

The number of outbound packets which were chosen to be discarded even though no errors had been detected to prevent their being transmitted, cpu 2.

Data Source

SGSN

© Copyright IBM Corp. 2008, 2009. All Rights Reserved.

Source Field

ifOutDiscards

Source Section

IP Interface

ifOutDiscards_CPU3

The number of outbound packets which were chosen to be discarded even though no errors had been detected to prevent their being transmitted, cpu 3.

Data Source

SGSN

Source Field

ifOutDiscards

Source Section

IP Interface

ifOutDiscards_CPU4

The number of outbound packets which were chosen to be discarded even though no errors had been detected to prevent their being transmitted, cpu 4.

Data Source

SGSN

Source Field

ifOutDiscards

Source Section

IP Interface

ifOutOctets

The total number of octets transmitted out of the interface, including framing characters.

Data Source

SGSN

Source Field

ifOutOctets

Source Section

IP Interface

ifOutOctets_CPU2

The total number of octets transmitted out of the interface, including framing characters, cpu 2.

Data Source

SGSN

Source Field

ifOutOctets

Source Section

IP Interface

ifOutOctets_CPU3

The total number of octets transmitted out of the interface, including framing characters, cpu 3.

Data Source

SGSN

Source Field

ifOutOctets

Source Section

IP Interface

ifOutOctets_CPU4

The total number of octets transmitted out of the interface, including framing characters, cpu 4.

Data Source

SGSN

Source Field

ifOutOctets

© Copyright IBM Corp. 2008, 2009. All Rights Reserved.

Source Section

IP Interface

ifOutPkts_CPU2

The total number of packets that higher-level protocols requested to be transmitted, cpu 2.

Data Source

SGSN

Source Field

ifOutPkts

Source Section

IP Interface

ifOutPkts_CPU3

The total number of packets that higher-level protocols requested to be transmitted, cpu 3.

Data Source

SGSN

Source Field

ifOutPkts

Source Section

IP Interface

ifOutPkts_CPU4

The total number of packets that higher-level protocols requested to be transmitted, cpu 4.

Data Source

SGSN

Source Field

ifOutPkts

Source Section

IP Interface

ifOutQlen

The length of the output packet queue (in packets).

Data Source

SGSN

Source Field

ifOutQlen

Source Section

IP Interface

ifOutQlen_CPU2

The length of the output packet queue (in packets), cpu 2.

Data Source

SGSN

Source Field

ifOutQlen

Source Section

IP Interface

ifOutQlen_CPU3

The length of the output packet queue (in packets), cpu 3.

Data Source

SGSN

Source Field

ifOutQlen

Source Section

IP Interface

ifOutQlen_CPU4

The length of the output packet queue (in packets), cpu 4.

© Copyright IBM Corp. 2008, 2009. All Rights Reserved.

Data Source

SGSN

Source Field

ifOutQlen

Source Section

IP Interface

ifOutUcastPkts

The total number of packets that higher-level protocols requested to be transmitted.

Data Source

SGSN

Source Field

ifOutUcastPkts

Source Section

IP Interface

jnxAtmIfCorrHCSErrs

The number of correctable cell Header Check Sequence (HCS) Errors that occurred.

Data Source

GGSN

Source Field

jnxAtmIfCorrHCSErrs

Source Section

jnxAtmIfEntry

jnxAtmIfInBadCrcs

The total number of incoming CRC errors.

Data Source

GGSN

Source Field

jnxAtmIfInBadCrcs

Source Section

jnxAtmIfEntry

jnxAtmIfInInvalidVCCells

The number of Cells that arrived for non existent VC.

Data Source

GGSN

Source Field

jnxAtmIfInInvalidVCCells

Source Section

jnxAtmIfEntry

jnxAtmIfInLenErrPkts

The number of AAL5 packets dropped because their length was incorrect.

Data Source

GGSN

Source Field

jnxAtmIfInLenErrPkts

Source Section

jnxAtmIfEntry

jnxAtmIfInNoBufDropPkts

The number of AAL5 packets dropped because there was no enough buffer to handle them.

Data Source

GGSN

Source Field

jnxAtmIfInNoBufDropPkts

© Copyright IBM Corp. 2008, 2009. All Rights Reserved.

Source Section

jnxAtmIfEntry

jnxAtmIfInNoBufferOAMCells

The number of received OAM cells or raw cells dropped because no buffers were available to handle them.

Data Source

GGSN

Source Field

jnxAtmIfInNoBufferOAMCells

Source Section

jnxAtmIfEntry

jnxAtmIfInTimeoutPkts

The number of AAL5 packets dropped because of reassembly timeout.

Data Source

GGSN

Source Field

jnxAtmIfInTimeoutPkts

Source Section

jnxAtmIfEntry

jnxAtmIfOutVCQueueDrops

The number of packets dropped because of queue limits on each VC.

Data Source

GGSN

Source Field

jnxAtmIfOutVCQueueDrops

Source Section

jnxAtmIfEntry

jnxAtmIfRxCellCount

The number of ATM cells received by the interface.

Data Source

GGSN

Source Field

jnxAtmIfRxCellCount

Source Section

jnxAtmIfEntry

jnxAtmIfRxCellFIFOOverRuns

The number of overruns in the Receive FIFO.

Data Source

GGSN

Source Field

jnxAtmIfRxCellFIFOOverRuns

Source Section

jnxAtmIfEntry

jnxAtmIfRxCellFIFOUnderRuns

The number of underruns in the receive FIFO.

Data Source

GGSN

Source Field

jnxAtmIfRxCellFIFOUnderRuns

Source Section

jnxAtmIfEntry

© Copyright IBM Corp. 2008, 2009. All Rights Reserved.

jnxAtmIfTxCellCount

The number of ATM cells transmitted by the interface.

Data Source

GGSN

Source Field

jnxAtmIfTxCellCount

Source Section

jnxAtmIfEntry

jnxAtmIfTxCellFIFOOverRuns

The number of overruns in the Transmit FIFO.

Data Source

GGSN

Source Field

jnxAtmIfTxCellFIFOOverRuns

Source Section

jnxAtmIfEntry

jnxAtmIfTxIdleCellCount

The number of idle cells sent by the port.

Data Source

GGSN

Source Field

jnxAtmIfTxIdleCellCount

Source Section

jnxAtmIfEntry

jnxAtmIfUncorrHCSErrs

The number of uncorrectable cell Header Check Sequence (HCS) Errors that occurred.

Data Source

GGSN

Source Field

jnxAtmIfUncorrHCSErrs

Source Section

jnxAtmIfEntry

jnxifAdminStatus

The desired state of the interface

Data Source

GGSN

Source Field

ifAdminStatus

Source Section

ifEntry

jnxifHCIn1SecRate

The number of bits per second (bps), delivered by this (sub-)layer to its next higher (sub-)layer.

Data Source

GGSN

Source Field

ifHCIn1SecRate

Source Section

ifJnxEntry

jnxifHCInBroadcastPkts

The number of packets, delivered by this sub-layer to a higher (sub-)layer, which were addressed to a broadcast address at this sub-layer.

© Copyright IBM Corp. 2008, 2009. All Rights Reserved.

Data Source

GGSN

Source Field

ifHCInBroadcastPkts

Source Section

ifXEntry

jnxifHCInMulticastPkts

The number of packets, delivered by this sub-layer to a higher (sub-)layer, which were addressed to a multicast address at this sub-layer.

Data Source

GGSN

Source Field

ifHCInMulticastPkts

Source Section

ifXEntry

jnxifHCInOctets

The total number of octets received on the interface, including framing characters.

Data Source

GGSN

Source Field

ifHCInOctets

Source Section

ifXEntry

jnxifHCInUcastPkts

The number of packets, delivered by this sub-layer to a higher (sub-)layer, which were not addressed to a multicast or broadcast address at this sub-layer.

Data Source

GGSN

Source Field

ifHCInUcastPkts

Source Section

ifXEntry

jnxifHCOut1SecRate

The number of bits per second (bps), delivered by this (sub-)layer to its next lower (sub-)layer.

Data Source

GGSN

Source Field

ifHCOut1SecRate

Source Section

ifJnxEntry

jnxifHCOutBroadcastPkts

The total number of packets that higher-level protocols requested be transmitted, and which were addressed to a broadcast address at this sub-layer.

Data Source

GGSN

Source Field

ifHCOutBroadcastPkts

Source Section

ifXEntry

jnxifHCOutMulticastPkts

The total number of packets that higher-level protocols requested be transmitted, and which were addressed to a multicast address at this sub-layer.

© Copyright IBM Corp. 2008, 2009. All Rights Reserved.

Data Source

GGSN

Source Field

ifHCOutMulticastPkts

Source Section

ifXEntry

jnxifHCOutOctets

The total number of octets transmitted out of the interface, including framing characters.

Data Source

GGSN

Source Field

ifHCOutOctets

Source Section

ifXEntry

jnxifHCOutUcastPkts

The total number of packets that higher-level protocols requested be transmitted, and which were not addressed to a multicast or broadcast address at this sub-layer.

Data Source

GGSN

Source Field

ifHCOutUcastPkts

Source Section

ifXEntry

jnxifHighSpeed

An estimate of the interface's current bandwidth in units of 1,000,000 bits per second.

Data Source

GGSN

Source Field

ifHighSpeed

Source Section

ifXEntry

jnxifIn1SecOctets

The number of octets per second (Bps, Bytes persecond), delivered by this (sub-)layer to its next higher (sub-)layer.

Data Source

GGSN

Source Field

ifIn1SecOctets

Source Section

ifJnxEntry

jnxifIn1SecPkts

The number of packets per second (pps), delivered by this (sub-)layer to its next higher (sub-)layer.

Data Source

GGSN

Source Field

ifIn1SecPkts

Source Section

ifJnxEntry

jnxifIn1SecRate

The number of bits per second (bps), delivered by this (sub-)layer to its next higher (sub-)layer.

© Copyright IBM Corp. 2008, 2009. All Rights Reserved.

Data Source

GGSN

Source Field

ifIn1SecRate

Source Section

ifJnxEntry

jnxifInBroadcastPkts

The number of packets, delivered by this sub-layer to a higher (sub-)layer, which were addressed to a broadcast address at this sub-layer.

Data Source

GGSN

Source Field

ifInBroadcastPkts

Source Section

ifXEntry

jnxifInDiscards

The number of inbound packets which were chosen to be discarded

Data Source

GGSN

Source Field

ifInDiscards

Source Section

ifEntry

jnxifInErrors

The number of inbound packets that contained errors preventing them from being deliverable to a higher-layer protocol.

Data Source

GGSN

Source Field

ifInErrors

Source Section

ifEntry

jnxifInMulticastPkts

The number of packets, delivered by this sub-layer to a higher (sub-)layer, which were addressed to a multicast address at this sub-layer.

Data Source

GGSN

Source Field

ifInMulticastPkts

Source Section

ifXEntry

jnxifInOctets

The total number of octets received on the interface, including framing characters.

Data Source

GGSN

Source Field

ifInOctets

Source Section

ifEntry

jnxifInUcastPkts

The number of packets, delivered by this sub-layer to a higher (sub-)layer, which were not addressed to a multicast or broadcast address at this sub-layer.

© Copyright IBM Corp. 2008, 2009. All Rights Reserved.

Data Source

GGSN

Source Field

ifInUcastPkts

Source Section

ifEntry

jnxifInUnknownProtos

The number of packets received via the interface which were discarded because of an unknown or unsupported protocol.

Data Source

GGSN

Source Field

ifInUnknownProtos

Source Section

ifEntry

jnxifMtu

The size of the largest packet which can be sent/received on the interface, specified in octets.

Data Source

GGSN

Source Field

ifMtu

Source Section

ifEntry

jnxifOut1SecOctets

The number of octets per second (Bps, Bytes per second), delivered by this (sub-)layer to its next lower (sub-)layer.

Data Source

GGSN

Source Field

ifOut1SecOctets

Source Section

ifJnxEntry

jnxifOut1SecPkts

The number of packets per second (pps), delivered by this (sub-)layer to its next lower (sub-)layer

Data Source

GGSN

Source Field

ifOut1SecPkts

Source Section

ifJnxEntry

jnxifOut1SecRate

The number of bits per second (bps), delivered by this (sub-)layer to its next lower (sub-)layer.

Data Source

GGSN

Source Field

ifOut1SecRate

Source Section

ifJnxEntry

jnxifOutBroadcastPkts

The total number of packets that higher-level protocols requested be transmitted, and which were addressed to a broadcast address at this sub-layer

© Copyright IBM Corp. 2008, 2009. All Rights Reserved.

Data Source

GGSN

Source Field

ifOutBroadcastPkts

Source Section

ifXEntry

jnxifOutDiscards

The number of outbound packets which were chosen to be discarded even though no errors had been detected to prevent their being transmitted.

Data Source

GGSN

Source Field

ifOutDiscards

Source Section

ifEntry

jnxifOutErrors

The number of outbound packets that could not be transmitted because of errors.

Data Source

GGSN

Source Field

ifOutErrors

Source Section

ifEntry

jnxifOutMulticastPkts

The total number of packets that higher-level protocols requested be transmitted, and which were addressed to a multicast address at this sub-layer

Data Source

GGSN

Source Field

ifOutMulticastPkts

Source Section

ifXEntry

jnxifOutOctets

The total number of octets transmitted out of the interface, including framing characters.

Data Source

GGSN

Source Field

ifOutOctets

Source Section

ifEntry

jnxifOutQLen

The length of the output packet queue (in packets).

Data Source

GGSN

Source Field

ifOutQLen

Source Section

ifEntry

jnxifOutUcastPkts

The total number of packets that higher-level protocols requested be transmitted.

Data Source

GGSN

© Copyright IBM Corp. 2008, 2009. All Rights Reserved.

Source Field

ifOutUcastPkts

Source Section

ifEntry

jnxifSpeed

An estimate of the interface's current bandwidth in bits per second.

Data Source

GGSN

Source Field

ifSpeed

Source Section

ifEntry

jnxPMonAllocPerSecond

The number of flow records allocated per second.

Data Source

GGSN

Source Field

jnxPMonAllocPerSecond

Source Section

jnxPMonMemoryEntry

jnxPMonCurrentActiveFlows

The number of flows currently active.

Data Source

GGSN

Source Field

jnxPMonCurrentActiveFlows

Source Section

JnxPMonFlowEntry

jnxPMonFlowAllocFailures

The number of flow allocation failures.

Data Source

GGSN

Source Field

jnxPMonFlowAllocFailures

Source Section

JnxPMonErrorEntry

jnxPMonFlowFreeFailures

The number of flow free failures.

Data Source

GGSN

Source Field

jnxPMonFlowFreeFailures

Source Section

JnxPMonErrorEntry

jnxPMonFlowMaxAlloc

The number of maximum flow records allocated.

Data Source

GGSN

Source Field

jnxPMonFlowMaxAlloc

Source Section

jnxPMonMemoryEntry

© Copyright IBM Corp. 2008, 2009. All Rights Reserved.

jnxPMonFlowTotalAlloc

The number of flow records allocated.

Data Source

GGSN

Source Field

jnxPMonFlowTotalAlloc

Source Section

jnxPMonMemoryEntry

jnxPMonFlowTotalFree

The number of flow records freed.

Data Source

GGSN

Source Field

jnxPMonFlowTotalFree

Source Section

jnxPMonMemoryEntry

jnxPMonFreeListFailures

The number of free list failures.

Data Source

GGSN

Source Field

jnxPMonFreeListFailures

Source Section

JnxPMonErrorEntry

jnxPMonFreePerSecond

The number of flow records freed per second.

Data Source

GGSN

Source Field

jnxPMonFreePerSecond

Source Section

jnxPMonMemoryEntry

jnxPMonNoMemDrops

The number of packet drops due to low/no memory.

Data Source

GGSN

Source Field

jnxPMonNoMemDrops

Source Section

JnxPMonErrorEntry

jnxPMonNotIPDrops

The number of packet drops due to not IP.

Data Source

GGSN

Source Field

jnxPMonNotIPDrops

Source Section

JnxPMonErrorEntry

jnxPMonNotIPv4Drops

The number of packet drops due to not IPv4.

Data Source

GGSN

© Copyright IBM Corp. 2008, 2009. All Rights Reserved.

Source Field

jnxPMonNotIPv4Drops

Source Section

JnxPMonErrorEntry

jnxPMonTenSecondAverageFlowBytes

The number of flow bytes per second in 10 second average.

Data Source

GGSN

Source Field

jnxPMonTenSecondAverageFlowBytes

Source Section

JnxPMonFlowEntry

jnxPMonTenSecondAverageFlowPackets

The number of flow packets per second in 10 second average.

Data Source

GGSN

Source Field

jnxPMonTenSecondAverageFlowPackets

Source Section

JnxPMonFlowEntry

jnxPMonTooSmallDrops

The number of packet drops due to too small on header.

Data Source

GGSN

Source Field

jnxPMonTooSmallDrops

Source Section

JnxPMonErrorEntry

jnxPMonTotalFlows

The cumulative number of total flows.

Data Source

GGSN

Source Field

jnxPMonTotalFlows

Source Section

JnxPMonFlowEntry

jnxPMonTotalFlowsAged

The cumulative number of total flows aged.

Data Source

GGSN

Source Field

jnxPMonTotalFlowsAged

Source Section

JnxPMonFlowEntry

jnxPMonTotalFlowsBytes

The number of total flows bytes.

Data Source

GGSN

Source Field

jnxPMonTotalFlowsBytes

Source Section

JnxPMonFlowEntry

© Copyright IBM Corp. 2008, 2009. All Rights Reserved.

jnxPMonTotalFlowsExpired

The cumulative number of total flows expired.

Data Source

GGSN

Source Field

jnxPMonTotalFlowsExpired

Source Section

JnxPMonFlowEntry

jnxPMonTotalFlowsExported

The cumulative number of total flows exported.

Data Source

GGSN

Source Field

jnxPMonTotalFlowsExported

Source Section

JnxPMonFlowEntry

jnxPMonTotalFlowsPackets

The number of total flows packets.

Data Source

GGSN

Source Field

jnxPMonTotalFlowsPackets

Source Section

JnxPMonFlowEntry

jnxPMonTotalFlowsPacketsExported

The cumulative number of total flows packets exported.

Data Source

GGSN

Source Field

jnxPMonTotalFlowsPacketsExported

Source Section

JnxPMonFlowEntry

jnxPMonTotalMemoryFree

The total amount of memory currently freed in KBbytes.

Data Source

GGSN

Source Field

jnxPMonTotalMemoryFree

Source Section

jnxPMonMemoryEntry

jnxPMonTotalMemoryUsed

The total amount of memory currently used in KBbytes.

Data Source

GGSN

Source Field

jnxPMonTotalMemoryUsed

Source Section

jnxPMonMemoryEntry

Release_SNMP_GGSN

Release

Data Source

GGSN

© Copyright IBM Corp. 2008, 2009. All Rights Reserved.

Source Field

Release_SNMP_GGSN

Source Section

Interface General

Net_BGPPeerIP Primitive Calculations

The following is a list of primitive calculations for the Net_BGPPeerIP entity.

GRAPHmultiLineSeparator

Special Control Field for Multi-Line Graphs

Calculation

```
""
```

NUMDAYS

of days in Report

Calculation

```
DAYSINREPORT()
```

NUMHOURS

of hours in Summation Data

Calculation

Net_BGPPeerIP Peg Counts

The following is a list of peg counts for the Net_BGPPeerIP entity.

bgpPeerInTotalMessages

Total number of messages received from the remote peer on this connection.

Data Source

SGSN

Source Field

bgpPeerInTotalMessages

Source Section

BGP Peer

bgpPeerInUpdates

Number of BGP UPDATE messages received on this connection.

Data Source

SGSN

Source Field

bgpPeerInUpdates

Source Section

BGP Peer

bgpPeerOutTotalMessages

Total number of messages transmitted to the remote peer on this connection.

Data Source

SGSN

Source Field

bgpPeerOutTotalMessages

Source Section

BGP Peer

bgpPeerOutUpdates

Number of BGP UPDATE messages transmitted on this connection.

Data Source

SGSN

Source Field

bgpPeerOutUpdates

Source Section

BGP Peer

© Copyright IBM Corp. 2008, 2009. All Rights Reserved.

collectionPeriod

GPRS General

Data Source

SGSN

GSNRelease

Release of GSN

Data Source

SGSN

PeerFsmEstablishedTransitions

The total number of times the BGP FSM is transitioned into the established state

Data Source

SGSN

Source Field

bgpPeerFsmEstablishedTransitions

Source Section

BGP Peer

PeerInUpdateElapsedTime

Elapsed time since the last BGP UPDATE message was received from the peer.

Data Source

SGSN

Source Field

bgpPeerInUpdateElapsedTime

Source Section

BGP Peer

Net_OSPFArea Primitive Calculations

The following is a list of primitive calculations for the Net_OSPFArea entity.

GRAPHmultiLineSeparator

Special Control Field for Multi-Line Graphs

Calculation

```
""
```

NUMDAYS

of days in Report

Calculation

```
DAYSINREPORT()
```

NUMHOURS

of hours in Summation Data

Calculation

Net_OSPFArea Peg Counts

The following is a list of peg counts for the Net_OSPFArea entity.

collectionPeriod

GPRS General

Data Source

SGSN

GSNRelease

Release of GSN

Data Source

SGSN

ospfAreaBdrRtrCount

Total number of area border routers reachable within this area .This is initially zero, and is calculated in each Shortest Path First (SPF) Pass.

© Copyright IBM Corp. 2008, 2009. All Rights Reserved.

Data Source

SGSN

Source Field

ospfAreaBdrRtrCount

Source Section

OSPF Area

ospfAreaLsaCount

Total number of link-state advertisements in this area's link-state database, excluding AS External LSA's.

Data Source

SGSN

Source Field

ospfAreaLsaCount

Source Section

OSPF Area

ospfAsBdrRtrCount

Total number of Autonomous System border routers reachable within this area. This is initially zero, and is calculated in each SPF Pass.

Data Source

SGSN

Source Field

ospfAsBdrRtrCount

Source Section

OSPF Area

ospfRxNewLsas

Number of link-state advertisements received determined to be new instantiations

Data Source

SGSN

Source Field

ospfRxNewLsas

Source Section

OSPF Area

ospfSpfRuns

The number of times that the intra-area route table has been calculated using this area's link-state database. This is typically done using Dijkstra's algorithm.

Data Source

SGSN

Source Field

ospfSpfRuns

Source Section

OSPF Area

Net_OSPFInterface Primitive Calculations

The following is a list of primitive calculations for the Net_OSPFInterface entity.

GRAPHmultiLineSeparator

Special Control Field for Multi-Line Graphs

Calculation

```
""
```

NUMDAYS

of days in Report

Calculation

```
DAYSINREPORT()
```

NUMHOURS

of hours in Summation Data

© Copyright IBM Corp. 2008, 2009. All Rights Reserved.

Net_OSPFInterface Peg Counts

The following is a list of peg counts for the Net_OSPFInterface entity.

collectionPeriod

GPRS General

Data Source

SGSN

GSNRelease

Release of GSN

Data Source

SGSN

ospfIfEvents

Number of times this OSPF interface has changed its state, or an error has occurred.

Data Source

SGSN

Source Field

ospfIfEvents

Source Section

OSPF Interface

Net_OSPFNeighIP Primitive Calculations

The following is a list of primitive calculations for the Net_OSPFNeighIP entity.

GRAPHmultiLineSeparator

Special Control Field for Multi-Line Graphs

Calculation

""

NUMDAYS

of days in Report

Updated: 2009-07-22

Calculation

```
DAYSINREPORT()
```

NUMHOURS

of hours in Summation Data

Net_OSPFNeighIP Peg Counts

The following is a list of peg counts for the Net_OSPFNeighIP entity.

collectionPeriod

GPRS General

Data Source

SGSN

GSNRelease

Release of GSN

Data Source

SGSN

ospfNbrEvents

Number of times this neighbor relationship has changed state, or an error has occurred.

Data Source

SGSN

Source Field

ospfNbrEvents

Source Section

OSPF Neighbor

Network Primitive Calculations

The following is a list of primitive calculations for the Network entity.

© Copyright IBM Corp. 2008, 2009. All Rights Reserved.

GRAPHmultiLineSeparator

Special Control Field for Multi-Line Graphs

Calculation

```
""
```

NUMDAYS

of days in Report

Calculation

```
DAYSINREPORT()
```

NUMHOURS

of hours in Summation Data

Calculation

Network Peg Counts

The following is a list of peg counts for the Network entity.

collectionPeriod

GPRS General

Data Source

SGSN

GSNRelease

Release of GSN

Data Source

SGSN

ospfExternLsaCount

Number of external (LS type 5) link-state advertisements in the link-state database.

Data Source

SGSN

Source Field

ospfExternLsaCount

Source Section

OSPF CPU

ospfOriginateNewLsas

Number of new link-state advertisements that have been originated

Data Source

SGSN

Source Field

ospfOriginateNewLsas

Source Section

OSPF CPU

ospfRxNewLsas

Number of link-state advertisements received determined to be new instantiations

Data Source

SGSN

Source Field

ospfRxNewLsas

Source Section

OSPF CPU

NSVC Primitive Calculations

The following is a list of primitive calculations for the NSVC entity.

GRAPHmultiLineSeparator

Special Control Field for Multi-Line Graphs

Calculation

""

© Copyright IBM Corp. 2008, 2009. All Rights Reserved.

NUMDAYS

of days in Report

Calculation

```
DAYSINREPORT()
```

NUMHOURS

of hours in Summation Data

Calculation

NSVC Peg Counts

The following is a list of peg counts for the NSVC entity.

collectionPeriod

Collection period in seconds

Data Source

SGSN

Source Field

granularity period (gp)

GSNRelease

Release of GSN

Data Source

SGSN

Source Field

showelements.Release

nsDownlinkPackets

The number of downlink packets sent by the Network Service (NS) layer.

Data Source

SGSN

Source Field

nsDownlinkPackets

Source Section

Network Service Virtual Connection

nsDownlinkPacketsDiscarded

The number of downlink packets discarded by the NS layer.

Data Source

SGSN

Source Field

nsDownlinkPacketsDiscarded

Source Section

Network Service Virtual Connection

OSPFArea Primitive Calculations

The following is a list of primitive calculations for the OSPFArea entity.

GRAPHmultiLineSeparator

Special Control Field for Multi-Line Graphs

Calculation

```
""
```

NUMDAYS

of days in Report

Calculation

```
DAYSINREPORT()
```

NUMHOURS

of hours in Summation Data

Calculation

© Copyright IBM Corp. 2008, 2009. All Rights Reserved.

UnknownEnterpriseField

Unknown Field exported from Enterprise Server

Calculation

```
nullInt()
```

OSPFArea Peg Counts

The following is a list of peg counts for the OSPFArea entity.

collectionPeriod

GPRS General

Data Source

SGSN

GSNRelease

Release of GSN

Data Source

SGSN

ospfAreaBdrRtrCount

Total number of area border routers reachable within this area

Data Source

SGSN

Source Field

ospfAreaBdrRtrCount

Source Section

OSPF Area

ospfAreaLsaCount

Total number of link-state advertisements in this area's link-state database, excluding AS External LSA's.

Data Source

SGSN

Source Field

ospfAreaLsaCount

Source Section

OSPF Area

ospfAsBdrRtrCount

Total number of Autonomous System border routers reachable within this area

Data Source

SGSN

Source Field

ospfAsBdrRtrCount

Source Section

OSPF Area

ospfRxNewLsas_R30

Number of link-state advertisements received determined to be new instantiations

Data Source

SGSN

Source Field

ospfRxNewLsas

Source Section

OSPF Area

ospfSpfRuns

Number of times that the intra-area route table has been calculated using this area's link-state database

© Copyright IBM Corp. 2008, 2009. All Rights Reserved.

Data Source

SGSN

Source Field

ospfSpfRuns

Source Section

OSPF Area

OSPFInterface Primitive Calculations

The following is a list of primitive calculations for the OSPFInterface entity.

GRAPHmultiLineSeparator

Special Control Field for Multi-Line Graphs

Calculation

```
""
```

NUMDAYS

of days in Report

Calculation

```
DAYSINREPORT()
```

NUMHOURS

of hours in Summation Data

Calculation

UnknownEnterpriseField

Unknown Field exported from Enterprise Server

Calculation

```
nullInt()
```

OSPFInterface Peg Counts

The following is a list of peg counts for the OSPFInterface entity.

collectionPeriod

GPRS General

Data Source

SGSN

GSNRelease

Release of GSN

Data Source

SGSN

ospfIfEvents

Number of times this OSPF interface has changed its state, or an error has occurred.

Data Source

SGSN

Source Field

ospfIfEvents

Source Section

OSPF Interface

OSPFNeighIP Primitive Calculations

The following is a list of primitive calculations for the OSPFNeighIP entity.

GRAPHmultiLineSeparator

Special Control Field for Multi-Line Graphs

Calculation

```
""
```

NUMDAYS

of days in Report

Calculation

```
DAYSINREPORT()
```

© Copyright IBM Corp. 2008, 2009. All Rights Reserved.

NUMHOURS

of hours in Summation Data

Calculation

UnknownEnterpriseField

Unknown Field exported from Enterprise Server

Calculation

```
nullInt()
```

OSPFNeighIP Peg Counts

The following is a list of peg counts for the OSPFNeighIP entity.

collectionPeriod

GPRS General

Data Source

SGSN

GSNRelease

Release of GSN

Data Source

SGSN

ospfNbrEvents

Number of times this neighbor relationship has changed state, or an error has occurred.

Data Source

SGSN

Source Field

ospfNbrEvents

Source Section

OSPF Neighbor

PIU Primitive Calculations

The following is a list of primitive calculations for the PIU entity.

GRAPHmultiLineSeparator

Special Control Field for Multi-Line Graphs

Calculation

```
""
```

NUMDAYS

of days in Report

Calculation

```
DAYSINREPORT()
```

NUMHOURS

of hours in Summation Data

Calculation

UnknownEnterpriseField

Unknown Field exported from Enterprise Server

Calculation

```
nullInt()
```

PIU Peg Counts

The following is a list of peg counts for the PIU entity.

collectionPeriod

Collection period in seconds

Data Source

SGSN

gsnCpuUsageGPB

(Removed in R8MD)Current CPU usage per processor for a General Processing Board (GPB). R7: The value is changed from the average of one second to one minute.

© Copyright IBM Corp. 2008, 2009. All Rights Reserved.

Data Source

SGSN

Source Field

SYS.gsnCpuUsageGPB

Source Section

System Resource

gsnCpuUsageIB

(Removed in R8MD) Current CPU usage per processor for an Interface Board (IBxx). R7: The value is changed from the average of one second to one minute.

Data Source

SGSN

Source Field

SYS.gsnCpuUsageIB

Source Section

System Resource

GSNRelease

Release of GSN

Data Source

SGSN

SYSgsnCpuUsage

This measurement shows the current CPU usage per processor for an IBxx or GPB. The value is the average CPU load measured on a per minute basis.

Data Source

SGSN

Source Field

SYS.gsnCpuUsage

Source Section

System Resource

SYSgsnMemUsage

This measurement shows the current Memory usage per processor for an IBxx or GPB. (not Power and Ethernet Board (PEB)) The value is the average Memory consumption measured on a per minute basis.

Data Source

SGSN

Source Field

SYS.gsnMemUsage

Source Section

System Resource

RA_GSN Primitive Calculations

The following is a list of primitive calculations for the RA_GSN entity.

GRAPHmultiLineSeparator

Special Control Field for Multi-Line Graphs

Calculation

```
""
```

NUMDAYS

of days in Report

Calculation

```
DAYSINREPORT()
```

NUMHOURS

of hours in Summation Data

Calculation

© Copyright IBM Corp. 2008, 2009. All Rights Reserved.

SuccGprsAttachRate

Successful GPRS attach procedures initiated in this SGSN area

Calculation

```
MMSuccGprsAttachU * 100.0 / MMAttGprsAttachU
```

SuccIntraSgsnRaUpdate

Successful intra-SGSN Routing Area Update procedure initiated in this SGSN area in percent

Calculation

```
MMSuccIntraSgsnRaUpdateU * 100.0 / MMAttIntraSgsnRaUpdateU
```

RA_GSN Peg Counts

The following is a list of peg counts for the RA_GSN entity.

GSN_RELEASE

Release

Data Source

SGSN

MMAttGprsAttachU

Attempted GPRS attach procedures initiated in this SGSN area

Data Source

SGSN

Source Field

MM.AttGprsAttach.U

MMAttGprsDetachMsU

Number of attempted GPRS detach procedures initiated by MS in this SGSN area

Data Source

SGSN

Source Field

MM.AttGprsDetachMs.U

MMAttGprsDetachSgsnU

Number of attempted GPRS detach procedures initiated by SGSN

Data Source

SGSN

Source Field

MM.AttGprsDetachSgsn.U

MMAttInterSgsnRaUpdateU

No of att inter-SGSN Routing Area Update procedures initiated in this SGSN area

Data Source

SGSN

Source Field

MM.AttInterSgsnRaUpdate.U

MMAttIntraSgsnRaUpdateU

Attempted intra-SGSN Routing Area Update procedures initiated in this SGSN area

Data Source

SGSN

Source Field

MM.AttIntraSgsnRaUpdate.U

MMSuccGprsAttachU

Successful GPRS attach procedures initiated in this SGSN area

Data Source

SGSN

Source Field

MM.SuccGprsAttach.U

MMSuccInterSgsnRaUpdateU

No of succ comp inter-SGSN Routing Area Update Proc initiated in this SGSN area

© Copyright IBM Corp. 2008, 2009. All Rights Reserved.

Data Source

SGSN

Source Field

MM.SuccInterSgsnRaUpdate.U

MMSuccIntraSgsnRaUpdateU

Successful intra-SGSN Routing Area Update procedure initiated in this SGSN area

Data Source

SGSN

Source Field

MM.SuccIntraSgsnRaUpdate.U

PERLENSEC

Period Length

Data Source

SGSN

SecAssoc Primitive Calculations

The following is a list of primitive calculations for the SecAssoc entity.

GRAPHmultiLineSeparator

Special Control Field for Multi-Line Graphs

Calculation

```
""
```

NUMDAYS

of days in Report

Calculation

```
DAYSINREPORT()
```

NUMHOURS

of hours in Summation Data

Calculation

UnknownEnterpriseField

Unknown Field exported from Enterprise Server

Calculation

```
nullInt()
```

SecAssoc Peg Counts

The following is a list of peg counts for the SecAssoc entity.

collectionPeriod

GPRS General

Data Source

SGSN

GSNRelease

Release of GSN

Data Source

SGSN

ipsecSACurrentBytes_R30

Number of bytes transferred on this SA so far.

Data Source

SGSN

Source Field

ipsecSACurrentBytes

Source Section

IPsec Security Association (SA)

ipsecSAPacketsNotOk_R30

Number of incorrect packets processed associated with the current SA.

© Copyright IBM Corp. 2008, 2009. All Rights Reserved.

Data Source

SGSN

Source Field

ipsecSAPacketsNotOk

Source Section

IPsec Security Association (SA)

ipsecSAPacketsOk_R30

Number of correct packets processed associated with the current SA.

Data Source

SGSN

Source Field

ipsecSAPacketsOk

Source Section

IPsec Security Association (SA)

SecAssoc_Card Primitive Calculations

The following is a list of primitive calculations for the SecAssoc_Card entity.

GRAPHmultiLineSeparator

Special Control Field for Multi-Line Graphs

Calculation

```
""
```

NUMDAYS

of days in Report

Calculation

```
DAYSINREPORT()
```

NUMHOURS

of hours in Summation Data

Calculation

UnknownEnterpriseField

Unknown Field exported from Enterprise Server

Calculation

```
nullInt()
```

SecAssoc_Card Peg Counts

The following is a list of peg counts for the SecAssoc_Card entity.

collectionPeriod

GPRS General

Data Source

SGSN

GSNRelease

Release of GSN

Data Source

SGSN

ipsecSACurrentBytes_R21

Number of bytes transferred on this SA so far.

Data Source

SGSN

Source Field

ipsecSACurrentBytes

Source Section

IPsec Security Association (SA)

ipsecSAPacketsNotOk_R21

Number of incorrect packets processed associated with the current SA.

© Copyright IBM Corp. 2008, 2009. All Rights Reserved.

Data Source

SGSN

Source Field

ipsecSAPacketsNotOk

Source Section

IPsec Security Association (SA)

ipsecSAPacketsOk_R21

Number of correct packets processed associated with the current SA.

Data Source

SGSN

Source Field

ipsecSAPacketsOk

Source Section

IPsec Security Association (SA)

SGSN_GGSN Primitive Calculations

The following is a list of primitive calculations for the SGSN_GGSN entity.

GRAPHmultiLineSeparator

Special Control Field for Multi-Line Graphs

Calculation

```
""
```

NUMDAYS

of days in Report

Calculation

```
DAYSINREPORT()
```

NUMHOURS

of hours in Summation Data

Calculation

pSGSN_GGSNdropPackRatedown

dropped packets ratio to total packets in the downlink direction per SGSN in persent

Calculation

```
( ggsnSgsnDownlinkDrops * 100.0 ) / ( 1.0 * ggsnSgsnDownlinkPackets )
```

pSGSN_GGSNdropPackRateup

Total SGSN-GGSN Packet Success Rate is the Total Average Success Factor of the overall Packets sent to and Received from ALL GGSNs. Each success factor is weighted by the is weighted by percentage of total packets in either uplink or downlink direction

Calculation

```
( ggsnSgsnUplinkDrops * 100.0) / ( 1.0 * ggsnSgsnUplinkPackets)
```

pSGSN_GGSNpacksizeDown

Average packet size is the ratio between bytes send and number of packets in downlink per SGSN

Calculation

```
( ggsnSgsnDownlinkBytes * 1.0 ) / ( 1.0 * ggsnSgsnDownlinkPackets )
```

pSGSN_GGSNpacksizeUp

Average packet size is the ratio between bytes send and number of packets in uplink per SGSN

Calculation

```
( ggsnSgsnUplinkBytes * 1.0 ) / (1.0 * ggsnSgsnUplinkPackets)
```

UnknownEnterpriseField

Unknown Field exported from Enterprise Server

Calculation

```
nullInt()
```

SGSN_GGSN Peg Counts

The following is a list of peg counts for the SGSN_GGSN entity.

collectionPeriod

Period Length

© Copyright IBM Corp. 2008, 2009. All Rights Reserved.

Data Source

GGSN

Source Field

collectionPeriod_GGSNCLI

Source Section

SGSN_GGSN General

collectionPeriod_SNMP_GGSN

Period Length

Data Source

GSGN

Source Field

collectionPeriod

Source Section

SGSN_GGSN General

ggsnSgsn_err_ind_recvd

GTP request results Error indications received Collected using CLI

Data Source

GGSN

Source Field

GTPrequestresultsErrorindicationsreceived

Source Section

ggsnstatisticssgsn

ggsnSgsn_err_ind_trans

GTP request results Error indications Transmitted Collected using CLI

Data Source

GGSN

Source Field

GTPrequestresultsErrorindicationsTransmitted

Source Section

ggsnstatisticssgsn

ggsnSgsnDownlinkBytes

Number of Downlink GTP-U bytes sent to the specific SGSN from the GGSN Collected using CLI.

Data Source

GGSN

Source Field

DownlinktrafficBytes

Source Section

ggsnstatisticssgsn

ggsnSgsnDownlinkBytes_jn

Total bytes for all processed downlink packets on a per SGSN.

Data Source

GSGN

Source Field

ggsnSgsnDownlinkBytes

Source Section

ggsnSgsnStatsTable

ggsnSgsnDownlinkDrops

Number of Downlink GTP-U packets dropped for the specific SGSN Collected using CLI.

Data Source

GGSN

© Copyright IBM Corp. 2008, 2009. All Rights Reserved.

Source Field

DownlinktrafficDroppedpackets

Source Section

ggsnstatisticssgsn

ggsnSgsnDownlinkDrops_jn

Total dropped packets in the downlink direction on a per SGSN.

Data Source

GSGN

Source Field

ggsnSgsnDownlinkDrops

Source Section

ggsnSgsnStatsTable

ggsnSgsnDownlinkPackets

Number of Downlink GTP-U packets sent to the specific SGSN from the GGSN Collected using CLI.

Data Source

GGSN

Source Field

DownlinktrafficPackets

Source Section

ggsnstatisticssgsn

ggsnSgsnDownlinkPackets_jn

Total downlink packets processed on a per SGSN.

Data Source

GSGN

Source Field

ggsnSgsnDownlinkPackets

Source Section

ggsnSgsnStatsTable

ggsnSgsnUplinkBytes

Number of Uplink GTP-U bytes sent from the specific SGSN to the GGSN Collected using CLI.

Data Source

GGSN

Source Field

UplinktrafficBytes

Source Section

ggsnstatisticssgsn

ggsnSgsnUplinkBytes_jn

Total bytes for all processed uplink packets on a per SGSN.

Data Source

GSGN

Source Field

ggsnSgsnUplinkBytes

Source Section

ggsnSgsnStatsTable

ggsnSgsnUplinkDrops

Number of Uplink GTP-U packets dropped for the specific SGSN Collected using CLI.

Data Source

GGSN

© Copyright IBM Corp. 2008, 2009. All Rights Reserved.

Source Field

UplinktrafficDroppedpackets

Source Section

ggsnstatisticssgsn

ggsnSgsnUplinkDrops_jn

Count of dropped packets in the uplink direction on a per SGSN.

Data Source

GSGN

Source Field

ggsnSgsnUplinkDrops

Source Section

ggsnSgsnStatsTable

ggsnSgsnUplinkPackets

Number of Uplink GTP-U packets sent from the specific SGSN to the GGSN Collected using CLI

Data Source

GGSN

Source Field

UplinktrafficPackets

Source Section

ggsnstatisticssgsn

ggsnSgsnUplinkPackets_jn

Total uplink packets processed on a per SGSN.

Data Source

GSGN

Source Field

ggsnSgsnUplinkPackets

Source Section

ggsnSgsnStatsTable

GSNRelease

Release

Data Source

GGSN

Source Field

GSNRelease_GGSNCLI

Source Section

SGSN_GGSN General

Release_SNMP_GGSN

Release

Data Source

GSGN

Source Field

GSNRelease

Source Section

SGSN_GGSN General

SrcClass Primitive Calculations

The following is a list of primitive calculations for the SrcClass entity.

GRAPHmultiLineSeparator

Special Control Field for Multi-Line Graphs

Calculation

""

© Copyright IBM Corp. 2008, 2009. All Rights Reserved.

NUMDAYS

of days in Report

Calculation

```
DAYSINREPORT()
```

NUMHOURS

of hours in Summation Data

Calculation

UnknownEnterpriseField

Unknown Field exported from Enterprise Server

Calculation

```
nullInt()
```

SrcClass Peg Counts

The following is a list of peg counts for the SrcClass entity.

collectionPeriod

Period Length

Data Source

GGSN

Source Field

collectionPeriod

Source Section

SrcClass General

GSNRelease

Release

Data Source

GGSN

Source Field

GSNRelease

Source Section

SrcClass General

jnxScuStatsBytes

The number of bytes sent out of jnxScuStatsDstIfIndex that match the source class (jnxScuStatsClassName) and match the address type (jnxScuStatsAddrFamily) defined for this table entry.

Data Source

GGSN

Source Field

jnxScuStatsBytes

Source Section

jnxScuStatsEntry

jnxScuStatsPackets

The number of packets sent out of jnxScuStatsDstIfIndex that match the source class (jnxScuStatsClassName) and match the address type (jnxScuStatsAddrFamily) defined for this table entry.

Data Source

GGSN

Source Field

jnxScuStatsPackets

Source Section

jnxScuStatsEntry

SS7 Primitive Calculations

The following is a list of primitive calculations for the SS7 entity.

© Copyright IBM Corp. 2008, 2009. All Rights Reserved.

GRAPHmultiLineSeparator

Special Control Field for Multi-Line Graphs

Calculation

```
""
```

NUMDAYS

of days in Report

Calculation

```
DAYSINREPORT()
```

NUMHOURS

of hours in Summation Data

Calculation

UnknownEnterpriseField

Unknown Field exported from Enterprise Server

Calculation

```
nullInt()
```

SS7 Peg Counts

The following is a list of peg counts for the SS7 entity.

collectionPeriod

Collection period in seconds

Data Source

SGSN

GSNRelease

Release of GSN

Data Source

SGSN

NoOfCurrRunConnTot

The number of currently running connections, total.

Data Source

SGSN

Source Field

ss7NoOfCurrRunConnTot

Source Section

SS7 SCCP Layer

NoOfIncSegMes

The number of incoming segmented messages.

Data Source

SGSN

Source Field

ss7NoOfIncSegMes

Source Section

SS7 SCCP Layer

NoOfRunDialTot

The number of running dialogues, total.

Data Source

SGSN

Source Field

ss7NoOfRunDialTot

Source Section

SS7 TCAP Layer

NoOfRunOpTot

The number of running operations, total.

© Copyright IBM Corp. 2008, 2009. All Rights Reserved.

Data Source

SGSN

Source Field

ss7NoOfRunOpTot

Source Section

SS7 TCAP Layer

ss7MessageOrigCR

The number of Connection Request messages sent.

Data Source

SGSN

Source Field

ss7MessageOrigCR

Source Section

SS7

ss7MessageOrigDT1

The number of Data Form 1 messages sent (Connection Oriented data).

Data Source

SGSN

Source Field

ss7MessageOrigDT1

Source Section

SS7

ss7MessageOrigRLSD

The number of Released messages sent.

Data Source

SGSN

Source Field

ss7MessageOrigRLSD

Source Section

SS7 SCCP Layer

ss7MessageOrigUDT

The total number of unit data (UDT) messages originated per class and source.

Data Source

SGSN

Source Field

ss7MessageOrigUDT

Source Section

SS7 SCCP Layer

ss7MessageOrigXUDT

The total number of extended unit data (XUDT) messages originated per class and source

Data Source

SGSN

Source Field

ss7MessageOrigXUDT

Source Section

SS7 SCCP Layer

ss7MessageTermCR

The number of Connection Request messages received.

Data Source

SGSN

Source Field

ss7MessageTermCR

© Copyright IBM Corp. 2008, 2009. All Rights Reserved.

ss7MessageTermDT1

The number of Data Form 1 messages received (Connection Oriented data).

Data Source

SGSN

Source Field

ss7MessageTermDT1

ss7MessageTermRLSD

The number of Released messages received.

Data Source

SGSN

Source Field

ss7MessageTermRLSD

ss7MessageTermUDT

The total number of UDT messages terminated per class and sink

Data Source

SGSN

Source Field

ss7MessageTermUDT

Source Section

SS7 SCCP Layer

ss7MessageTermXUDT

The total number of XUDT messages, that are terminated.

Data Source

SGSN

Source Field

ss7MessageTermXUDT

Source Section

SS7 SCCP Layer

ss7MSUDiscardError

The message signaling unit (MSU) is discarded due to routing data error

Data Source

SGSN

Source Field

ss7MSUDiscardError

Source Section

SS7 MTP layer

ss7ProtocolErrorComp

A protocol error is detected in component portion.

Data Source

SGSN

Source Field

ss7ProtocolErrorComp

Source Section

SS7 TCAP Layer

ss7ProtocolErrorTraA

A protocol error has occurred, since P-abort is unrecognized transaction identity (TID)

Data Source

SGSN

Source Field

ss7ProtocolErrorTraA

Source Section

SS7 TCAP Layer

© Copyright IBM Corp. 2008, 2009. All Rights Reserved.

ss7ProtocolErrorTraD

A protocol error has occurred, since P-abort is unrecognized message type.

Data Source

SGSN

Source Field

ss7ProtocolErrorTraD

Source Section

SS7 TCAP Layer

ss7SLFailure

Retired fr 5.0.10.0.0-Signaling link (SL) failure is detected

Data Source

SGSN

Source Field

ss7SLFailure

Source Section

SS7 MTP layer

ss7SLRestoration

Retired fr 5.0.10.0.0-SL restoration has occurred

Data Source

SGSN

Source Field

ss7SLRestoration

Source Section

SS7 MTP layer

ss7SPInaccess

The adjacent signaling point (SP) is inaccessible

Data Source

SGSN

Source Field

ss7SPInaccess

Source Section

SS7 MTP layer

ss7TCMessageReceive

The total number of TC messages received by the stack.

Data Source

SGSN

Source Field

ss7TCMessageReceive

Source Section

SS7 TCAP Layer

ss7TCMessageSent

The total number of transaction capability (TC) messages sent by the stack.

Data Source

SGSN

Source Field

ss7TCMessageSent

Source Section

SS7 TCAP Layer

SS7Association Primitive Calculations

The following is a list of primitive calculations for the SS7Association entity.

GRAPHmultiLineSeparator

Special Control Field for Multi-Line Graphs

© Copyright IBM Corp. 2008, 2009. All Rights Reserved.

Calculation

```
""
```

NUMDAYS

of days in Report

Calculation

```
DAYSINREPORT()
```

NUMHOURS

of hours in Summation Data

Calculation

UnknownEnterpriseField

Unknown Field exported from Enterprise Server

Calculation

```
nullInt()
```

SS7Association Peg Counts

The following is a list of peg counts for the SS7Association entity.

ss7MessageReceivedPerAssociation

This measurement provides the number of Message Signal Units (MSUs) received on the MTP-L3 User Adaptation Layer (M3UA) association. The maximum read interval is 900 sec.

Data Source

SGSN

Source Field

ss7MessageReceivedPerAssociation

Source Section

SS7 Association

ss7MessageSentPerAssociation

This measurement type provides the number of MSUs sent on the M3UA association. The MagId.SlotId in the index is for the SCTP FE handling the association. The maximum read interval is 900 sec.

Data Source

SGSN

Source Field

ss7MessageSentPerAssociation

Source Section

SS7 Association

ss7OctetsReceivedPerAssociation

This measurement provides the number of kbytes received by M3UA on an M3UA association. The maximum read interval is 3600 sec.

Data Source

SGSN

Source Field

ss7OctetsReceivedPerAssociation

Source Section

SS7 Association

ss7OctetsSentPerAssociation

The number of kbytes sent by M3UA on an M3UA association. The maximum read interval is 3600 sec.

Data Source

SGSN

Source Field

ss7OctetsSentPerAssociation

Source Section

SS7 Association

© Copyright IBM Corp. 2008, 2009. All Rights Reserved.

SSN Primitive Calculations

The following is a list of primitive calculations for the SSN entity.

GRAPHmultiLineSeparator

Special Control Field for Multi-Line Graphs

Calculation

```
""
```

NUMDAYS

of days in Report

Calculation

```
DAYSINREPORT()
```

NUMHOURS

of hours in Summation Data

Calculation

SSN Peg Counts

The following is a list of peg counts for the SSN entity.

ss7NoOfRunDialPerSsn

The number of running TCAP dialogs per SSN.

Data Source

SGSN

Source Field

ss7NoOfRunDialPerSsn

ss7NoOfRunOpPerSsn

The number of running TCAP operations per SSN.

Data Source

SGSN

Source Field

ss7NoOfRunOpPerSsn

System Primitive Calculations

The following is a list of primitive calculations for the System entity.

GRAPHmultiLineSeparator

Special Control Field for Multi-Line Graphs

Calculation

```
""
```

NUMDAYS

of days in Report

Calculation

```
DAYSINREPORT()
```

NUMHOURS

of hours in Summation Data

Calculation

PercentActiveSubscribers

Percent Active Subscribers

Calculation

```
sum(MSC.HLRSubs[subString(LocalKey, 1, 6) = "420608"], NHLRREGAST) * 100.0
/ sum(HLR, NSUBSCNT)
```

PercentRegisteredSubscribers

Percent Registered Subscribers

Calculation

```
sum(MSC.HLRSubs[subString(LocalKey, 1, 6) = "420608"],NHLRMSST ) * 100.0 /
sum(HLR, NSUBSCNT)
```

pTotalGGSNPacketSuccessRate

Total GGSN Packet Success Rate is the Total Average Success Factor of the overall Packets sent to and Received from ALL GGSNs

© Copyright IBM Corp. 2008, 2009. All Rights Reserved.

Calculation

```
aggr(GSNType.GSN, pGGSNPacketSuccessRate)
```

pTotalSessionManSuccessRateGGSN

Total Session Management Success Rate

Calculation

```
aggr(GSNType.GSN, pSessionManSuccessRateGGSN)
```

RegisteredInroamers

Registered Inroamers

Calculation

```
sum(MSC.HLRSubs[subString(LocalKey, 1, 6) != "420608"], NHLRMSST)
```

RegisteredOutroamer

Registered Outroamers

Calculation

```
sum(HLR.PLMN[subString(LocalKey, 1, 6) != "420608"], vsum( GPPERPLMNCNT,
PERPLMNCNT ))
```

SubscribersHLR

Subscribers in HLR

Calculation

```
AGGR(HLR, NSUBSCNT)
```

SubscribersVLR

Subscribers in VLR

Calculation

```
sum(MSC.HLRSubs[subString(LocalKey, 1, 6) = "420608"], NHLRMSST)
```

TotalCellTCHTraffic

Average TCH/F Traffic Level

Calculation

```
protect(sum(MSC.BSC.BTSSite.Cell, TCF_TRAFF_VOL))
```

TotalSwitchedTraffic

Generates a predefined graph showing total switch traffic in the network and total air traffic

Calculation

```
sum(MSC, TotalSwitchedTraffic)
```

TA_Name Primitive Calculations

The following is a list of primitive calculations for the TA_Name entity.

GRAPHmultiLineSeparator

Special Control Field for Multi-Line Graphs

Calculation

```
""
```

NUMDAYS

of days in Report

Calculation

```
DAYSINREPORT()
```

NUMHOURS

of hours in Summation Data

Calculation

UnknownEnterpriseField

Unknown Field exported from Enterprise Server

Calculation

```
nullInt()
```

TA_Name Peg Counts

The following is a list of peg counts for the TA_Name entity.

collectionPeriod

Collection period in seconds

Data Source

SGSN

© Copyright IBM Corp. 2008, 2009. All Rights Reserved.

greTaCurrentBytes

Number of bytes transferred including the tunnel overhead

Data Source

SGSN

Source Field

greTaCurrentBytes

Source Section

GRE Tunnel Association

greTaPacketsNotOk

Number of incorrect packets processed associated with the current TA

Data Source

SGSN

Source Field

greTaPacketsNotOk

Source Section

GRE Tunnel Association

greTaPacketsOk

Number of correct packets processed associated with the current TA

Data Source

SGSN

Source Field

greTaPacketsOk

Source Section

GRE Tunnel Association

GSNRelease

Release of GSN

Data Source

SGSN

TimeSlot Primitive Calculations

The following is a list of primitive calculations for the TimeSlot entity.

GRAPHmultiLineSeparator

Special Control Field for Multi-Line Graphs

Calculation

```
""
```

NUMDAYS

of days in Report

Calculation

```
DAYSINREPORT()
```

NUMHOURS

of hours in Summation Data

Calculation

TimeSlot Peg Counts

The following is a list of peg counts for the TimeSlot entity.

ss7MessageReceivedPerLinkNb6

The number of MSU messages received on this narrowband link.

Data Source

SGSN

Source Field

ss7MessageReceivedPerLinkNb

Source Section

SS7 Narrowband Link Counter Tokens

© Copyright IBM Corp. 2008, 2009. All Rights Reserved.

ss7MessageSentPerLinkNb

The number of MSU messages sent on this narrowband link.

Data Source

SGSN

Source Field

ss7MessageSentPerLinkNb

ss7OctetsReceivedPerLinkNb

This measurement provides the number of KB received by MTP-L3 on a narrowband link. The maximum read interval is 10800 sec.

Data Source

SGSN

Source Field

ss7OctetsReceivedPerLinkNb

Source Section

SS7

ss7OctetsSentPerLinkNb

This measurement provides the number of KB sent by MTP-L3 on a narrowband link. The maximum read interval is 10800 sec.

Data Source

SGSN

Source Field

ss7OctetsSentPerLinkNb

Source Section

SS7

ss7SLFailureNb

The number of narrowband signaling link (SL) failures detected per link.

Data Source

SGSN

Source Field

ss7SLFailureNb

Source Section

SS7

ss7SLRestorationNb

The number of narrowband SL restorations occurred per link.

Data Source

SGSN

Source Field

ss7SLRestorationNb

Source Section

SS7

Trunk Primitive Calculations

The following is a list of primitive calculations for the Trunk entity.

GRAPHmultiLineSeparator

Special Control Field for Multi-Line Graphs

Calculation

```
""
```

NUMDAYS

of days in Report

Calculation

```
DAYSINREPORT()
```

NUMHOURS

of hours in Summation Data

© Copyright IBM Corp. 2008, 2009. All Rights Reserved.

Calculation

PVCThroughputRx

Throughput a PVC reception during data collection KBytes/s

Calculation

```
frWanRxBytes / (61440.0 * collectionPeriod)
```

PVCThroughputTx

Throughput a PVC transmission during 15 minutes

Calculation

```
frWanTxBytes / (61440.0 * collectionPeriod)
```

TrunkGOS

Dimensioned Grade of Service

Calculation

UnknownEnterpriseField

Unknown Field exported from Enterprise Server

Calculation

```
nullInt()
```

Trunk Peg Counts

The following is a list of peg counts for the Trunk entity.

collectionPeriod

GPRS General

Data Source

SGSN

frWanLmiErrors

Number of bad frames received on LMI DLCI (Link).

Data Source

SGSN

Source Field

frWanLmiErrors

Source Section

Frame Relay Link

frWanLmiTimeouts

Number of times T392 timer expired (Link).

Data Source

SGSN

Source Field

frWanLmiTimeouts

Source Section

Frame Relay Link

frWanLmiWanFlows

Number of canput fails for frames on the LMI channel (Link).

Data Source

SGSN

Source Field

frWanLmiWanFlows

Source Section

Frame Relay Link

frWanRxAsynchs

Number of asynchronous frames received (Link).

Data Source

SGSN

© Copyright IBM Corp. 2008, 2009. All Rights Reserved.

Source Field

frWanRxAsynchs

Source Section

Frame Relay Link

frWanRxBytes

Total number of bytes received (Link).

Data Source

SGSN

Source Field

frWanRxBytes

Source Section

Frame Relay Link

frWanRxCLLMs

Number of CLLM messages received (Link).

Data Source

SGSN

Source Field

frWanRxCLLMs

Source Section

Frame Relay Link

frWanRxDrops

Number of rx buffer allocation failures (Link).

Data Source

SGSN

Source Field

frWanRxDrops

Source Section

Frame Relay Link

frWanRxFrames

Total number of frames received (Link).

Data Source

SGSN

Source Field

frWanRxFrames

Source Section

Frame Relay Link

frWanRxFullStat

Number of full status frames received (Link).

Data Source

SGSN

Source Field

frWanRxFullStat

Source Section

Frame Relay Link

frWanRxInvDLCI

Number of frames for invalid DLCIs (Link).

Data Source

SGSN

Source Field

frWanRxInvDLCI

Source Section

Frame Relay Link

© Copyright IBM Corp. 2008, 2009. All Rights Reserved.

frWanRxInvRq

Number of invalid frames received (Link).

Data Source

SGSN

Source Field

frWanRxInvRq

Source Section

Frame Relay Link

frWanRxLmiPolls

Number of PVC status enquiries (Link).

Data Source

SGSN

Source Field

frWanRxLmiPolls

Source Section

Frame Relay Link

frWanRxSeqOnly

Number of keep alive frames received (Link).

Data Source

SGSN

Source Field

frWanRxSeqOnly

Source Section

Frame Relay Link

frWanRxTooBig

Frames received exceeding maximum size (Link).

Data Source

SGSN

Source Field

frWanRxTooBig

Source Section

Frame Relay Link

frWanRxUnattDLCIs

Number of frames for unattached (unused) DLCIs (Link).

Data Source

SGSN

Source Field

frWanRxUnattDLCIs

Source Section

Frame Relay Link

frWanTxBytes

Total number of bytes transmitted (Link).

Data Source

SGSN

Source Field

frWanTxBytes

Source Section

Frame Relay Link

frWanTxDrops

Number of tx buffer allocation failures due to drops (Link).

Data Source

SGSN

© Copyright IBM Corp. 2008, 2009. All Rights Reserved.

Source Field

frWanTxDrops

Source Section

Frame Relay Link

frWanTxFrames

Total number of frames transmitted (Link).

Data Source

SGSN

Source Field

frWanTxFrames

Source Section

Frame Relay Link

frWanTxFullStat

Number of full status enquiry responses sent (Link).

Data Source

SGSN

Source Field

frWanTxFullStat

Source Section

Frame Relay Link

frWanTxInvRq

Number of invalid transmission frames (Link).

Data Source

SGSN

Source Field

frWanTxInvRq

Source Section

Frame Relay Link

frWanTxLmiPolls

Number of transmitted PVC status enquiries (Link).

Data Source

SGSN

Source Field

frWanTxLmiPolls

Source Section

Frame Relay Link

frWanTxNoBuff

Number of tx buffer allocation failures due to no buffer (Link).

Data Source

SGSN

Source Field

frWanTxNoBuff

Source Section

Frame Relay Link

frWanTxSeqOnly

Number of other status enquiry responses sent (Link).

Data Source

SGSN

Source Field

frWanTxSeqOnly

Source Section

Frame Relay Link

© Copyright IBM Corp. 2008, 2009. All Rights Reserved.

frWanTxStops

Number of congested transmit frames (Link).

Data Source

SGSN

Source Field

frWanTxStops

Source Section

Frame Relay Link

frWanWanFlows

Number of canput fails on the lower layer (Link).

Data Source

SGSN

Source Field

frWanWanFlows

Source Section

Frame Relay Link

GSNRelease

Release of GSN

Data Source

SGSN

hdlcRxErrAbort

Number of frames discarded due to a disruption in the reception caused by a received HDLC Abort pattern.

Data Source

SGSN

Source Field

hdlcRxErrAbort

Source Section

E1/T1

hdlcRxErrAbort_SubSlot3

Number of frames discarded due to a disruption in the reception caused by a received HDLC Abort pattern, type 3 or 4.

Data Source

SGSN

Source Field

hdlcRxErrAbort

Source Section

E1/T1

hdlcRxErrAbort_SubSlot4

Number of frames discarded due to a disruption in the reception caused by a received HDLC Abort pattern, type 1 or 2.

Data Source

SGSN

Source Field

hdlcRxErrAbort

Source Section

E1/T1

hdlcRxErrBusy

Busy error. Number of times the fraction has been restarted because the SCC has no empty message block in the Rx-BD queue to write the data to

Data Source

SGSN

© Copyright IBM Corp. 2008, 2009. All Rights Reserved.

Source Field

hdlcRxErrBusy

Source Section

E1/T1

hdlcRxErrBusy_SubSlot3

Busy error. Number of times the fraction has been restarted because the SCC has no empty message block in the Rx-BD queue to write the data to, type 3 or 4.

Data Source

SGSN

Source Field

hdlcRxErrBusy

Source Section

E1/T1

hdlcRxErrBusy_SubSlot4

Busy error. Number of times the fraction has been restarted because the SCC has no empty message block in the Rx-BD queue to write the data to, type 1 or 2.

Data Source

SGSN

Source Field

hdlcRxErrBusy

Source Section

E1/T1

hdlcRxErrCRC

Number of frames discarded due to CRC error.

Data Source

SGSN

Source Field

hdlcRxErrCRC

Source Section

E1/T1

hdlcRxErrCRC_SubSlot3

Number of frames discarded due to CRC error, type 3 or 4.

Data Source

SGSN

Source Field

hdlcRxErrCRC

Source Section

E1/T1

hdlcRxErrCRC_SubSlot4

Number of frames discarded due to CRC error, type 1 or 2.

Data Source

SGSN

Source Field

hdlcRxErrCRC

Source Section

E1/T1

hdlcRxErrLackOfBufs

Number of discarded frames due to an empty STREAMS message block pool.

Data Source

SGSN

Source Field

hdlcRxErrLackOfBufs

© Copyright IBM Corp. 2008, 2009. All Rights Reserved.

Source Section

E1/T1

hdlcRxErrLackOfBufs_SubSlot3

Number of discarded frames due to an empty STREAMS message block pool, type 3 or 4.

Data Source

SGSN

Source Field

hdlcRxErrLackOfBufs

Source Section

E1/T1

hdlcRxErrLackOfBufs_SubSlot4

Number of discarded frames due to an empty STREAMS message block pool, type 1 or 2.

Data Source

SGSN

Source Field

hdlcRxErrLackOfBufs

Source Section

E1/T1

hdlcRxErrMaxFrameLen

Number of frames discarded due to exceeded maximum frame length.

Data Source

SGSN

Source Field

hdlcRxErrMaxFrameLen

Source Section

E1/T1

hdlcRxErrMaxFrameLen_SubSlot3

Number of frames discarded due to exceeded maximum frame length, type 3 or 4.

Data Source

SGSN

Source Field

hdlcRxErrMaxFrameLen

Source Section

E1/T1

hdlcRxErrMaxFrameLen_SubSlot4

Number of frames discarded due to exceeded maximum frame length, type 1 or 2.

Data Source

SGSN

Source Field

hdlcRxErrMaxFrameLen

Source Section

E1/T1

hdlcRxErrNonOctetAlign

Number of frames discarded due to noneven 8-bit length.

Data Source

SGSN

Source Field

hdlcRxErrNonOctetAlign

Source Section

E1/T1

hdlcRxErrNonOctetAlign_SubSlot3

Number of frames discarded due to noneven 8-bit length, type 3 or 4.

© Copyright IBM Corp. 2008, 2009. All Rights Reserved.

Data Source

SGSN

Source Field

hdlcRxErrNonOctetAlign

Source Section

E1/T1

hdlcRxErrNonOctetAlign_SubSlot4

Number of frames discarded due to noneven 8-bit length, type 1 or 2.

Data Source

SGSN

Source Field

hdlcRxErrNonOctetAlign

Source Section

E1/T1

hdlcRxErrQueue

Number of frames lost due to internal queue error.

Data Source

SGSN

Source Field

hdlcRxErrQueue

Source Section

E1/T1

hdlcRxErrQueue_SubSlot3

Number of frames lost due to internal queue error, type 3 or 4.

Data Source

SGSN

Source Field

hdlcRxErrQueue

Source Section

E1/T1

hdlcRxErrQueue_SubSlot4

Number of frames lost due to internal queue error, type 1 or 2.

Data Source

SGSN

Source Field

hdlcRxErrQueue

Source Section

E1/T1

hdlcRxOctets

Number of received bytes.

Data Source

SGSN

Source Field

hdlcRxOctets

Source Section

E1/T1

hdlcRxOctets_SubSlot3

Number of received bytes, type 3 or 4.

Data Source

SGSN

Source Field

hdlcRxOctets

© Copyright IBM Corp. 2008, 2009. All Rights Reserved.

Source Section

E1/T1

hdlcRxOctets_SubSlot4

Number of received bytes, type 1 or 2.

Data Source

SGSN

Source Field

hdlcRxOctets

Source Section

E1/T1

hdlcRxOK

Number of received correct frames.

Data Source

SGSN

Source Field

hdlcRxOK

Source Section

E1/T1

hdlcRxOK_SubSlot3

Number of received correct frames, type 3 or 4.

Data Source

SGSN

Source Field

hdlcRxOK

Source Section

E1/T1

hdlcRxOK_SubSlot4

Number of received correct frames, type 1 or 2.

Data Source

SGSN

Source Field

hdlcRxOK

Source Section

E1/T1

hdlcTxOctets

Number of transmitted bytes.

Data Source

SGSN

Source Field

hdlcTxOctets

Source Section

E1/T1

hdlcTxOctets_SubSlot3

Number of transmitted bytes, type 3 or 4.

Data Source

SGSN

Source Field

hdlcTxOctets

Source Section

E1/T1

hdlcTxOctets_SubSlot4

Number of transmitted bytes, type 1 or 2.

© Copyright IBM Corp. 2008, 2009. All Rights Reserved.

Data Source

SGSN

Source Field

hdlcTxOctets

Source Section

E1/T1

hdlcTxOK

Number of transmitted frames.

Data Source

SGSN

Source Field

hdlcTxOK

Source Section

E1/T1

hdlcTxOK_SubSlot3

Number of transmitted frames, type 3 or 4.

Data Source

SGSN

Source Field

hdlcTxOK

Source Section

E1/T1

hdlcTxOK_SubSlot4

Number of transmitted frames, type 1 or 2.

Data Source

SGSN

Source Field

hdlcTxOK

Source Section

E1/T1

pppIBytes

Total number of bytes received on interface

Data Source

SGSN

Source Field

pppIBytes

Source Section

PPP

pppIErrors

Total number of input errors on interface

Data Source

SGSN

Source Field

pppIErrors

Source Section

PPP

pppIPackets

Total number of packets received on interface

Data Source

SGSN

Source Field

pppIPackets

© Copyright IBM Corp. 2008, 2009. All Rights Reserved.

Source Section

PPP

pppIPRcvd

Total number of IP packets received on interface

Data Source

SGSN

Source Field

pppIPRcvd

Source Section

PPP

pppIPSent

Total number of IP packets sent on interface

Data Source

SGSN

Source Field

pppIPSent

Source Section

PPP

pppOBytes

Total number of bytes sent on interface

Data Source

SGSN

Source Field

pppOBytes

Source Section

PPP

pppOErrors

Total number of output errors on interface

Data Source

SGSN

Source Field

pppOErrors

Source Section

PPP

pppOPackets

Total number of packets sent on interface

Data Source

SGSN

Source Field

pppOPackets

Source Section

PPP

VirtualChannel Primitive Calculations

The following is a list of primitive calculations for the VirtualChannel entity.

GRAPHmultiLineSeparator

Special Control Field for Multi-Line Graphs

Calculation

```
""
```

NUMDAYS

of days in Report

Calculation

```
DAYSINREPORT()
```

© Copyright IBM Corp. 2008, 2009. All Rights Reserved.

NUMHOURS

of hours in Summation Data

Calculation

UnknownEnterpriseField

Unknown Field exported from Enterprise Server

Calculation

```
nullInt()
```

VirtualChannel Peg Counts

The following is a list of peg counts for the VirtualChannel entity.

aal5VccCrcErrors

The number of AAL5 CPCS PDUs received with CRC-32 errors on this AAL5 VCC at the interface associated with an AAL5 entity.

Data Source

GGSN

Source Field

aal5VccCrcErrors

Source Section

aal5VccEntry

aal5VccOverSizedSDUs

The number of AAL5 CPCS PDUs discarded on this AAL5 VCC at the interface associated with an AAL5 entity because the AAL5 SDUs were too large.

Data Source

GGSN

Source Field

aal5VccOverSizedSDUs

Source Section

aal5VccEntry

aal5VccSarTimeOuts

of partially re-assembled AAL5 CPCS PDUs which were discarded on this AAL5 VCC at the interface because they were not fully re-assembled within the required time period.

Data Source

GGSN

Source Field

aal5VccSarTimeOuts

Source Section

aal5VccEntry

collectionPeriod

Period Length

Data Source

GGSN

Source Field

collectionPeriod

Source Section

VirtualChannel General

GSNRelease

Release

Data Source

GGSN

Source Field

GSNRelease

© Copyright IBM Corp. 2008, 2009. All Rights Reserved.

Source Section

VirtualChannel General

jnxAtmVCConnType

The type of connection.

Data Source

GGSN

Source Field

jnxAtmVCConnType

Source Section

jnxAtmVCEntry

jnxAtmVCEncapsulation

The atm encapsulation type associated with the VC.

Data Source

GGSN

Source Field

jnxAtmVCEncapsulation

Source Section

jnxAtmVCEntry

jnxAtmVCInBytes

The number of bytes received on the VC.

Data Source

GGSN

Source Field

jnxAtmVCInBytes

Source Section

jnxAtmVCEntry

jnxAtmVCInOAMF5AISCells

The number of OAM F5 cells received, with AIS bit set.

Data Source

GGSN

Source Field

jnxAtmVCInOAMF5AISCells

Source Section

jnxAtmVCEntry

jnxAtmVCInOAMF5LoopCells

The number of OAM F5 loopback cells received.

Data Source

GGSN

Source Field

jnxAtmVCInOAMF5LoopCells

Source Section

jnxAtmVCEntry

jnxAtmVCInOAMF5RDICells

The number of OAM F5 cells received, with RDI bit set.

Data Source

GGSN

Source Field

jnxAtmVCInOAMF5RDICells

Source Section

jnxAtmVCEntry

jnxAtmVCInPkts

The number of packets received on the VC.

© Copyright IBM Corp. 2008, 2009. All Rights Reserved.

Data Source

GGSN

Source Field

jnxAtmVCInPkts

Source Section

jnxAtmVCEntry

jnxAtmVCOAMDownCellCount

The minimum number of loopback cells to be received to declare that the VC is down.

Data Source

GGSN

Source Field

jnxAtmVCOAMDownCellCount

Source Section

jnxAtmVCEntry

jnxAtmVCOAMPeriod

This time interval indicates how often the F5 cells are sent to know the status of the VC.

Data Source

GGSN

Source Field

jnxAtmVCOAMPeriod

Source Section

jnxAtmVCEntry

jnxAtmVCOAMUpCellCount

The minimum number of loopback cells to be received to declare that the VC is up.

Data Source

GGSN

Source Field

jnxAtmVCOAMUpCellCount

Source Section

jnxAtmVCEntry

jnxAtmVCOutBytes

The number of bytes sent out on the VC.

Data Source

GGSN

Source Field

jnxAtmVCOutBytes

Source Section

jnxAtmVCEntry

jnxAtmVCOutOAMF5LoopCells

The number of OAM F5 loopback cells sent.

Data Source

GGSN

Source Field

jnxAtmVCOutOAMF5LoopCells

Source Section

jnxAtmVCEntry

jnxAtmVCOutOAMF5RDICells

The number of OAM F5 cells transmitted, with RDI bit set.

Data Source

GGSN

Source Field

jnxAtmVCOutOAMF5RDICells

© Copyright IBM Corp. 2008, 2009. All Rights Reserved.

Source Section

jnxAtmVCEntry

jnxAtmVCOutPkts

The number of packets sent out on the VC.

Data Source

GGSN

Source Field

jnxAtmVCOutPkts

Source Section

jnxAtmVCEntry

jnxAtmVCTailQueuePktDrops

The number of packets dropped due to bandwidth constraints.

Data Source

GGSN

Source Field

jnxAtmVCTailQueuePktDrops

Source Section

jnxAtmVCEntry

jnxAtmVCTotalDownTime

The total VC down time in seconds ever since the system rebooted.

Data Source

GGSN

Source Field

jnxAtmVCTotalDownTime

Source Section

jnxAtmVCEntry

ss7MessageReceivedPerLinkBb

The number of MSU messages received on this broadband link.

Data Source

SGSN

ss7MessageSentPerLinkBb5

The number of MSU messages sent on this broadband link.

Data Source

SGSN

Source Field

ss7MessageSentPerLinkBb

Source Section

SS7 Broadband Link Counters

ss7OctetsReceivedPerLinkBb

This measurement provides the number of KB received by MTP-L3 on a broadband link. The maximum read interval is 3600 sec.

Data Source

SGSN

Source Field

ss7OctetsReceivedPerLinkBb

Source Section

SS7 Broadband Link Counters

ss7OctetsSentPerLinkBb

This measurement provides the number of KB sent by MTP-L3 on a broadband link. The maximum read interval is 3600 sec.

Data Source

SGSN

© Copyright IBM Corp. 2008, 2009. All Rights Reserved.

Source Field

ss7OctetsSentPerLinkBb

Source Section

SS7 Broadband Link Counters

VirtualPath Primitive Calculations

The following is a list of primitive calculations for the VirtualPath entity.

GRAPHmultiLineSeparator

Special Control Field for Multi-Line Graphs

Calculation

```
""
```

NUMDAYS

of days in Report

Calculation

```
DAYSINREPORT()
```

NUMHOURS

of hours in Summation Data

Calculation

UnknownEnterpriseField

Unknown Field exported from Enterprise Server

Calculation

```
nullInt()
```

VirtualPath Peg Counts

The following is a list of peg counts for the VirtualPath entity.

collectionPeriod

Period Length

Data Source

GGSN

Source Field

collectionPeriod

Source Section

VirtualPath General

GSNRelease

Release

Data Source

GGSN

Source Field

GSNRelease

Source Section

VirtualPath General

jnxAtmVpInBytes

The number of bytes received on the VP.

Data Source

GGSN

Source Field

jnxAtmVpInBytes

Source Section

jnxAtmVpEntry

jnxAtmVpInOamF4AisCells

The number of OAM F4 AIS cells received on the VP.

Data Source

GGSN

© Copyright IBM Corp. 2008, 2009. All Rights Reserved.

Source Field

jnxAtmVpInOamF4AisCells

Source Section

jnxAtmVpEntry

jnxAtmVpInOamF4Cells

The number of OAM F4 cells received on the VP.

Data Source

GGSN

Source Field

jnxAtmVpInOamF4Cells

Source Section

jnxAtmVpEntry

jnxAtmVpInOamF4LoopCells

The number of OAM F4 loopback cells received on the VP.

Data Source

GGSN

Source Field

jnxAtmVpInOamF4LoopCells

Source Section

jnxAtmVpEntry

jnxAtmVpInOamF4RdiCells

The number of OAM F4 RDI cells received on the VP.

Data Source

GGSN

Source Field

jnxAtmVpInOamF4RdiCells

Source Section

jnxAtmVpEntry

jnxAtmVpInPkts

The number of packets received on the VP.

Data Source

GGSN

Source Field

jnxAtmVpInPkts

Source Section

jnxAtmVpEntry

jnxAtmVpOamDownCellCount

The minimum number of consecutive loopback cells to be received to declare that the VP is down.

Data Source

GGSN

Source Field

jnxAtmVpOamDownCellCount

Source Section

jnxAtmVpEntry

jnxAtmVpOamPeriod

This time interval indicates how often the OAM F4 cells are sent to determine the status of the VP.

Data Source

GGSN

Source Field

jnxAtmVpOamPeriod

© Copyright IBM Corp. 2008, 2009. All Rights Reserved.

Source Section

jnxAtmVpEntry

jnxAtmVpOamUpCellCount

The minimum number of consecutive loopback cells to be received to declare that the VP is up.

Data Source

GGSN

Source Field

jnxAtmVpOamUpCellCount

Source Section

jnxAtmVpEntry

jnxAtmVpOutBytes

The number of bytes sent out on the VP.

Data Source

GGSN

Source Field

jnxAtmVpOutBytes

Source Section

jnxAtmVpEntry

jnxAtmVpOutOamF4Cells

The number of OAM F4 cells transmitted on the VP.

Data Source

GGSN

Source Field

jnxAtmVpOutOamF4Cells

Source Section

jnxAtmVpEntry

jnxAtmVpOutOamF4LoopCells

The number of OAM F4 loopback cells transmitted on the VP.

Data Source

GGSN

Source Field

jnxAtmVpOutOamF4LoopCells

Source Section

jnxAtmVpEntry

jnxAtmVpOutOamF4RdiCells

The number of OAM F4 RDI cells transmitted on the VP.

Data Source

GGSN

Source Field

jnxAtmVpOutOamF4RdiCells

Source Section

jnxAtmVpEntry

jnxAtmVpOutPkts

The number of packets sent out on the VP.

Data Source

GGSN

Source Field

jnxAtmVpOutPkts

Source Section

jnxAtmVpEntry

jnxAtmVpTotalDownTime

The total VP downtime in seconds, ever since the system rebooted.

© Copyright IBM Corp. 2008, 2009. All Rights Reserved.

Data Source

GGSN

Source Field

jnxAtmVpTotalDownTime

Source Section

jnxAtmVpEntry

© Copyright IBM Corp. 2008, 2009. All Rights Reserved.

9 HLR Traffic Entities

The following figures show the Prospect reporting hierarchy for HLR traffic entities.

Figure 5: Reporting Hierarchy

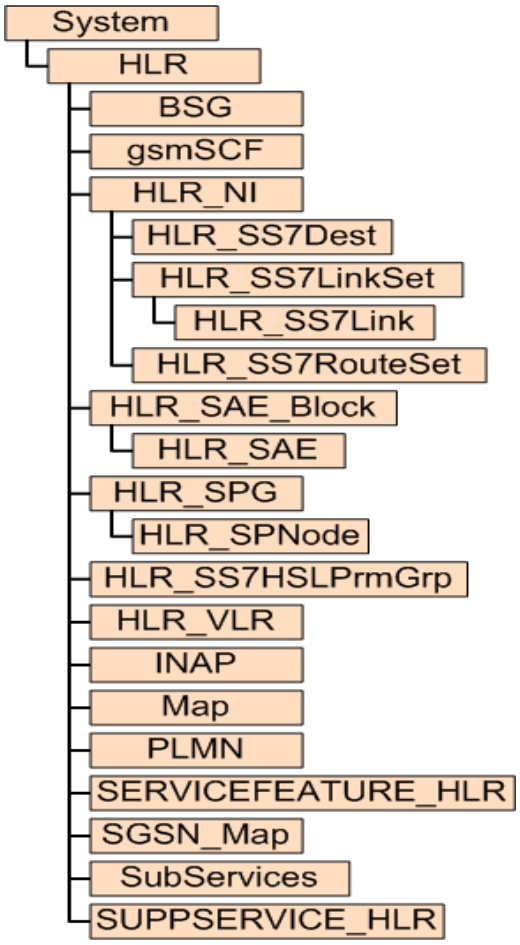

Updated: 2009-07-22

© Copyright IBM Corp. 2008, 2009. All Rights Reserved.

10 HLR Traffic Fields

The following is a list of available HLR Traffic performance data fields.

BSG Primitive Calculations

The following is a list of primitive calculations for the BSG entity.

GRAPHmultiLineSeparator

Special Control Field for Multi-Line Graphs

Calculation

```
""
```

INTERVALS

Number of 60 minute intervals covered

Calculation

```
PERLEN / (1.0 * 60)
```

LocalName

BSG Name

Calculation

```
LocalKey
```

NUMDAYS

of days in Report

Calculation

```
DAYSINREPORT()
```

NUMHOURS

of hours in Summation Data

Calculation

VENDORTECH

Vendor Technology

Calculation

```
isNull( PERLEN ) ? nullString() : "EricssonGSM"
```

BSG Peg Counts

The following is a list of peg counts for the BSG entity.

BSG_RELEASE

Release

NCUGBSG

Subscribers with CUG SS.

Data Source

HLR_IOG20_APG40

Source Field

NCUGBSG

Source Section

CUGBSG

PERLEN

Period Length

rg_reap

ReportGenerator Internal Count

gsmSCF Primitive Calculations

The following is a list of primitive calculations for the gsmSCF entity.

GRAPHmultiLineSeparator

Special Control Field for Multi-Line Graphs

Calculation

```
""
```

NUMDAYS

of days in Report

Calculation

```
DAYSINREPORT()
```

NUMHOURS

of hours in Summation Data

gsmSCF Peg Counts

The following is a list of peg counts for the gsmSCF entity.

HLR_RELEASE

Release

NGSCFCAMEL

Number of CAMEL users (Trigger Detection Points)

NGSCFMMINT

Number of MMINT users (Detection Points)

PERLEN

Period Length

HLR Primitive Calculations

The following is a list of primitive calculations for the HLR entity.

CP_LOAD%

CP load on average

Calculation

```
ACCLOAD / (1.0 * NSCAN)
```

GRAPHmultiLineSeparator

Special Control Field for Multi-Line Graphs

Calculation

```
""
```

INTERVALS

Number of 60 minute intervals covered

Calculation

```
PERLEN / (1.0 * 60)
```

NUMDAYS

of days in Report

Calculation

```
DAYSINREPORT()
```

NUMHOURS

of hours in Summation Data

Calculation

VENDORTECH

Vendor Technology

Calculation

```
isNull( PERLEN ) ? nullString() : "EricssonGSM"
```

HLR Peg Counts

The following is a list of peg counts for the HLR entity.

ACCLOAD

Accumulated Processor Load in percent

Data Source

HLR_IOG20_APG40

Source Field

ACCLOAD

Source Section

LOAS

AQUEUEOVERF

Number of messages answered with ""resource limitation"" due to overflow of a high priority queue

Data Source

HLR_IOG20_APG40

Source Field

AQUEUEOVERF

Source Section

AUTHEN

BOTHCNT

Number of subscribers with NAM to 'both GPRS and non-GPRS' NAM

Data Source

HLR_IOG20_APG40

Source Field

BOTHCNT

Source Section

NAMSUBS

CONNSECT

Total number of simultaneous connection sections

Data Source

HLR_IOG20_APG40

Source Field

CONNSECT

Source Section

C7SCCPUSE

CREFREC

Counter for CREF messages received from MTP

Data Source

HLR_IOG20_APG40

Source Field

CREFREC

Source Section

C7SCQOS

CREFSENT

Counter for CREF messages sent to MTP

Data Source

HLR_IOG20_APG40

Source Field

CREFSENT

Source Section

C7SCQOS

CRREC

Counter for CR messages received from MTP

Data Source

HLR_IOG20_APG40

Source Field

CRREC

Source Section

C7SCQOS

CRSENT

Counter for CR messages sent to MTP

Data Source

HLR_IOG20_APG40

Source Field

CRSENT

Source Section

C7SCQOS

DMSU

Number of discarded MSU's

Data Source

HLR_IOG20_APG40

Source Field

DMSU

Source Section

SS7TOTAL

DSIF

Number of discarded MSU's octets

Data Source

HLR_IOG20_APG40

Source Field

DSIF

Source Section

SS7TOTAL

ERRREC

Counter for ERR messages received from MTP

Data Source

HLR_IOG20_APG40

Source Field

ERRREC

Source Section

C7SCQOS

ERRSENT

Counter for ERR messages sent to MTP

Data Source

HLR_IOG20_APG40

Source Field

ERRSENT

Source Section

C7SCQOS

GPODBINVCNT

Number of GPRS barring invocations

Data Source

HLR_IOG20_APG40

Source Field

GPODBINVCNT

Source Section

ODBINV

GPRSCNT

Number of subscribers with 'GPRS only' NAM

Data Source

HLR_IOG20_APG40

Source Field

GPRSCNT

Source Section

NAMSUBS

HLR_RELEASE

Release

IMSU

Number of incoming MSU's

Data Source

HLR_IOG20_APG40

Source Field

IMSU

Source Section

SS7TOTAL

ISIF

Number of incoming SIF octets

Data Source

HLR_IOG20_APG40

Source Field

ISIF

Source Section

SS7TOTAL

LUDTREC

LUDT messages received from MTP

Data Source

STS_HLR

Source Field

LUDTREC

Source Section

C7SCQOS

LUDTSENT

LUDT messages sent to MTP

Data Source

STS_HLR

Source Field

LUDTSENT

Source Section

C7SCQOS

LUDTSREC

LUDTS messages received from MTP

Data Source

STS_HLR

Source Field

LUDTSREC

Source Section

C7SCQOS

LUDTSSENT

LUDTS messages sent to MTP

Data Source

STS_HLR

Source Field

LUDTSSENT

Source Section

C7SCQOS

MSGHAND

Total messages handled from local or remote subsystem

Data Source

HLR_IOG20_APG40

Source Field

MSGHAND

Source Section

C7SCCPUSE

MSGPOL

Counter for syntax error detected

Data Source

HLR_IOG20_APG40

Source Field

MSGPOL

Source Section

C7SCPERF

MSGPOLREJ

Counter for not allowed policed messages

Data Source

HLR_IOG20_APG40

Source Field

MSGPOLREJ

Source Section

C7SCPERF

MSGRCL0

Total messages received for connectionless class 0

Data Source

HLR_IOG20_APG40

Source Field

MSGRCL0

Source Section

C7SCCPUSE

MSGRCL1

Total messages received for connectionless class 1

Data Source

HLR_IOG20_APG40

Source Field

MSGRCL1

Source Section

C7SCCPUSE

MSGRQGT

Counter for messages requiring global title translation

Data Source

HLR_IOG20_APG40

Source Field

MSGRQGT

Source Section

C7SCCPUSE

MSGSCL0

Total messages sent for connectionless class 0

Data Source

HLR_IOG20_APG40

Source Field

MSGSCL0

Source Section

C7SCCPUSE

MSGSCL1

Total messages sent for connectionless class 1

Data Source

HLR_IOG20_APG40

Source Field

MSGSCL1

Source Section

C7SCCPUSE

MSINVDPC

Number of MSUs discarded due to invalid destination point code

Data Source

HLR_IOG20_APG40

Source Field

MSINVDPC

Source Section

SS7TOTAL

MSINVSIO

Number of MSUs discarded due to invalid Service Indicator Octet

Data Source

HLR_IOG20_APG40

Source Field

MSINVSIO

Source Section

SS7TOTAL

NACCBLOT

Accumulated system blocking time, in seconds

Data Source

HLR_IOG20_APG40

Source Field

NACCBLOT

Source Section

CP

NAUREQQUINT

Number of quintets requested to AUC

Data Source

HLR_IOG20_APG40

Source Field

NAUREQQUINT

Source Section

AUTHEN

NAUREQTRIP

Number of triplets requested to AUC

Data Source

HLR_IOG20_APG40

Source Field

NAUREQTRIP

Source Section

AUTHEN

NAUTIMSINOT

triplet requests failed due to International Mobile Subscriber Identity (IMSI) not found in AUC

Data Source

HLR_IOG20_APG40

Source Field

NAUTIMSINOT

Source Section

AUTHEN

NAUTPARMAP

Number of authentication parameters received from AUC-MAP

Data Source

HLR_IOG20_APG40

Source Field

NAUTPARMAP

Source Section

AUTHEN

NAUTPARREC

Number of authentication parameters received from AUC-IOS

Data Source

HLR_IOG20_APG40

Source Field

NAUTPARREC

Source Section

AUTHEN

NAUTPARREU

Number of times authentication parameters have been reused

Data Source

HLR_IOG20_APG40

Source Field

NAUTPARREU

Source Section

AUTHEN

NAUTPARSEN

Number of authentication parameters sent to VLR

Data Source

HLR_IOG20_APG40

Source Field

NAUTPARSEN

Source Section

AUTHEN

NAUTQUINPRO

Number of quintets generated by AUC

Data Source

HLR_IOG20_APG40

Source Field

NAUTQUINPRO

Source Section

AUTHEN

NAUTQUINPROCS

Number of quintets generated by AUC for CS domain

Data Source

HLR_IOG20_APG40

Source Field

NAUTQUINPROCS

Source Section

AUTHEN

NAUTQUINPROPS

Number of quintets generated by AUC for PS domain

Data Source

HLR_IOG20_APG40

Source Field

NAUTQUINPROPS

Source Section

AUTHEN

NAUTREQMAP

Number of authentication data requests in MAP queue

Data Source

HLR_IOG20_APG40

Source Field

NAUTREQMAP

Source Section

AUTHEN

NAUTREQQUE

Number of authentication data requests in IOS queue

Data Source

HLR_IOG20_APG40

Source Field

NAUTREQQUE

Source Section

AUTHEN

NAUTSYFANOVALCS

Number of not valid resynchronisation failure requests for CS domain

Data Source

HLR_IOG20_APG40

Source Field

NAUTSYFANOVALCS

Source Section

AUTHEN

NAUTSYFANOVALPS

Number of not valid resynchronisation failure requests for PS domain

Data Source

HLR_IOG20_APG40

Source Field

NAUTSYFANOVALPS

Source Section

AUTHEN

NAUTSYFAVALCS

Number of valid resynchronisation failure requests for CS domain

Data Source

HLR_IOG20_APG40

Source Field

NAUTSYFAVALCS

Source Section

AUTHEN

NAUTSYFAVALPS

Number of valid resynchronisation failure requests for PS domain

Data Source

HLR_IOG20_APG40

Source Field

NAUTSYFAVALPS

Source Section

AUTHEN

NAUTSYNCFAIL

Number of synchronization failures received in AUC

Data Source

HLR_IOG20_APG40

Source Field

NAUTSYNCFAIL

Source Section

AUTHEN

NAUTSYNFAI

Number of synchronisation failures received from VLR or SGSN

Data Source

HLR_IOG20_APG40

Source Field

NAUTSYNFAI

Source Section

AUTHEN

NAUTTRIPPRO

Number of triplets provided by AUCS

Data Source

HLR_IOG20_APG40

Source Field

NAUTTRIPPRO

Source Section

AUTHEN

NCAPREJCNT

Accumulations in requested HLR

Data Source

HLR_IOG20_APG40

Source Field

NCAPREJCNT

Source Section

LOAS

NCAPREQCNT

Number of Processor capacity requested in HLR

Data Source

HLR_IOG20_APG40

Source Field

NCAPREQCNT

Source Section

LOAS

NCPABLOT

Accumulated time of blocked CP-unit, autamatically blocked, in seconds

Data Source

HLR_IOG20_APG40

Source Field

NCPABLOT

Source Section

CP

NCPMBLOT

Accumulated time of blocked CP-unit, manually blocked, in seconds

Data Source

HLR_IOG20_APG40

Source Field

NCPMBLOT

Source Section

CP

NCUGSENT

Number of succesful CUG invocations

Data Source

HLR_IOG20_APG40

Source Field

NCUGSENT

Source Section

ROAMING

NFORLAPT

Number of forlopps aborted by APT

Data Source

HLR_IOG20_APG40

Source Field

NFORLAPT

Source Section

CP

NFORLAPZ

Number of forlopps aborted by APZ

Data Source

HLR_IOG20_APG40

Source Field

NFORLAPZ

Source Section

CP

NFORLMAN

Number of forlopps aborted manually

Data Source

HLR_IOG20_APG40

Source Field

NFORLMAN

Source Section

CP

NFORWSENT

Number of forwarded to numbers sent to GMSC

Data Source

HLR_IOG20_APG40

Source Field

NFORWSENT

Source Section

ROAMING

NFTDIEX

Number of incoming external calls fetched from the Exchange Input Load Supervision function.

Data Source

HLR_IOG20_APG40

Source Field

NFTDIEX

Source Section

LOAS

NFTDMHI

emergency calls and packet channel allocation attempts fetched from the Exchange Input Load Supervision Function

Data Source

HLR_IOG20_APG40

Source Field

NFTDMHI

Source Section

LOAS

NFTDMLO

The number of fetched high- and low priority maintenance tasks in Base Level Load Regulation.

Data Source

HLR_IOG20_APG40

Source Field

NFTDMLO

Source Section

LOAS

NFTDNPRIO_HLR

Number of non-priority originating calls fetched from the Processor Load Control function

Data Source

HLR_IOG20_APG40

Source Field

NFTDNPRIO

Source Section

LOAS

NFTDORG

originating calls (emergency calls not included) fetched from the Exchange Input Load Supervision function.

Data Source

HLR_IOG20_APG40

Source Field

NFTDORG

Source Section

LOAS

NFTDPRIO_HLR

Number of priority originating calls fetched from the Processor Load Control function

Data Source

HLR_IOG20_APG40

Source Field

NFTDPRIO

Source Section

LOAS

NFTDTCAP

Number of accepted processor capacity requests for low priority TCAP messages

Data Source

HLR_IOG20_APG40

Source Field

NFTDTCAP

Source Section

LOAS

NLMUSUBSCNT

Number of registered LMU subscribers in HLR

Data Source

HLR_IOG20_APG40

Source Field

NLMUSUBSCNT

Source Section

HLRSUBS

NLOSTCL

Number of calls lost during conversation due to system restart

Data Source

HLR_IOG20_APG40

Source Field

NLOSTCL

Source Section

RESTART

NLOSTRE

Number of calls lost during call set-up due to system restart

Data Source

HLR_IOG20_APG40

Source Field

NLOSTRE

Source Section

RESTART

NLRGA

Number of large restarts without reload, automatically initiated

Data Source

HLR_IOG20_APG40

Source Field

NLRGA

Source Section

CP

NLRGM

Number of large restarts without reload, manually initiated

Data Source

HLR_IOG20_APG40

Source Field

NLRGM

Source Section

CP

NMAUABLOT

Accumulated time of blocked MAU/AMU autamatically blocked, in seconds

Data Source

HLR_IOG20_APG40

Source Field

NMAUABLOT

Source Section

CP

NMAUF

Number of MAU/AMU faults

Data Source

HLR_IOG20_APG40

Source Field

NMAUF

Source Section

CP

NMAUMBLOT

Accumulated time of blocked MAU/AMU, manually blocked, in seconds

Data Source

HLR_IOG20_APG40

Source Field

NMAUMBLOT

Source Section

CP

NMOBSUBSCNT

Number of registered mobile subscribers in HLR

Data Source

HLR_IOG20_APG40

Source Field

NMOBSUBSCNT

Source Section

HLRSUBS

NNOREC

Number of prog executions terminated

Data Source

HLR_IOG20_APG40

Source Field

NNOREC

Source Section

CP

NOFFIEX

Number of incoming external calls offered to the Exchange Input Load Supervision function.

Data Source

HLR_IOG20_APG40

Source Field

NOFFIEX

Source Section

LOAS

NOFFMHI

emergency calls and packet channel allocation attempts offered to the Exchange Input Load Supervision Function

Data Source

HLR_IOG20_APG40

Source Field

NOFFMHI

Source Section

LOAS

NOFFMLO

The number of offered high- and low priority maintenance tasks in Base Level Load Regulation.

Data Source

HLR_IOG20_APG40

Source Field

NOFFMLO

Source Section

LOAS

NOFFNPRIO_HLR

Number of non-priority originating calls offered to the Processor Load Control function

Data Source

HLR_IOG20_APG40

Source Field

NOFFNPRIO

Source Section

LOAS

NOFFORG

originating calls offered (emergency calls not included) to the Exchange Input Load Supervision function.

Data Source

HLR_IOG20_APG40

Source Field

NOFFORG

Source Section

LOAS

NOFFPRIO_HLR

Number of priority originating calls offered to the Processor Load Control function

Data Source

HLR_IOG20_APG40

Source Field

NOFFPRIO

Source Section

LOAS

NOFFTCAP

Number of processor capacity requests for low priority TCAP messages offered to the Processor Load Control function

Data Source

HLR_IOG20_APG40

Source Field

NOFFTCAP

Source Section

LOAS

NONGPRSCNT

Number of subscribers with 'non-GPRS only' NAM

Data Source

HLR_IOG20_APG40

Source Field

NONGPRSCNT

Source Section

NAMSUBS

NPAG1SGSNTOT

Number of first page attempts to an SGSN

Data Source

HLR_IOG20_APG40

Source Field

NPAG1SGSNTOT

Source Section

SGSNSTAT

NPAG2SGSNTOT

Number of repeated page attempts to an SGSN

Data Source

HLR_IOG20_APG40

Source Field

NPAG2SGSNTOT

Source Section

SGSNSTAT

NPBITF

Number of permanent bitfaults

Data Source

HLR_IOG20_APG40

Source Field

NPBITF

Source Section

CP

NPCPF

Number of permanent CP-faults

Data Source

HLR_IOG20_APG40

Source Field

NPCPF

Source Section

CP

NREDOPCNT

Nr of MAP operations changing data from the nw for Redundant subscribers in HLR

Data Source

STS_HLR

Source Field

NREDOPCNT

Source Section

HLRPERF

NRELA

Number of large restarts with reload, automatically initiated

Data Source

HLR_IOG20_APG40

Source Field

NRELA

Source Section

CP

NRELM

Number of large restarts with reload, manually initiated

Data Source

HLR_IOG20_APG40

Source Field

NRELM

Source Section

CP

NREQMEGAUT

Number of authentication data request messages returning Global System for Mobile communications (GSM) authentication vectors

Data Source

HLR_IOG20_APG40

Source Field

NREQMEGAUT

Source Section

AUTHEN

NREQMEUAUT

Number of authentication data request messages returning Universal Mobile Telecommunication System (UMTS) authentication vectors

Data Source

HLR_IOG20_APG40

Source Field

NREQMEUAUT

Source Section

AUTHEN

NROAMSENT

Number of roaming numbers sent to GMSC

Data Source

HLR_IOG20_APG40

Source Field

NROAMSENT

Source Section

ROAMING

NRSUBSCNT

Number of Redundant subscribers registered in HLR

Data Source

HLR_IOG20_APG40

Source Field

NRSUBSCNT

Source Section

HLRSUBS

NSCAN

Accumulations

Data Source

HLR_IOG20_APG40

Source Field

NSCAN

Source Section

LOAS

NSGSNRESETREC

Number of received Reset messages from an SGSN

Data Source

HLR_IOG20_APG40

Source Field

NSGSNRESETREC

Source Section

SGSNSTAT

NSGSNRESETSENT

Number of sent Reset messages to an SGSN

Data Source

HLR_IOG20_APG40

Source Field

NSGSNRESETSENT

Source Section

SGSNSTAT

NSMLA

Number of small restarts automatically initiated

Data Source

HLR_IOG20_APG40

Source Field

NSMLA

Source Section

CP

NSMLM

Number of small restarts manually initiated

Data Source

HLR_IOG20_APG40

Source Field

NSMLM

Source Section

CP

NSUBSCNT

Number of registered subscribers in HLR

Data Source

HLR_IOG20_APG40

Source Field

NSUBSCNT

Source Section

HLRSUBS

NSUBSRSA

Number of subscribers with an RSA associated

Data Source

HLR_IOG20_APG40

Source Field

NSUBSRSA

Source Section

RSASUBS

NTBITF

Number of temporary bitfaults

Data Source

HLR_IOG20_APG40

Source Field

NTBITF

Source Section

CP

NTCPF

Number of temporary CP-faults

Data Source

HLR_IOG20_APG40

Source Field

NTCPF

Source Section

CP

OCTRETRN

Number of octets retransmitted

Data Source

HLR_IOG20_APG40

Source Field

OCTRETRN

Source Section

SS7TOTAL

ODBINVCNT

Total number of operations barred by an Operator Determined Barring

Data Source

HLR_IOG20_APG40

Source Field

ODBINVCNT

Source Section

ODBINV

ODBREGCNT

Number of call forwarding registration or activation rejections due to any ODB

Data Source

HLR_IOG20_APG40

Source Field

ODBREGCNT

Source Section

ODBINV

OMMSU

Number of originating management MSU's

Data Source

HLR_IOG20_APG40

Source Field

OMMSU

Source Section

SS7TOTAL

OMSIF

Number of originating management MSU octets

Data Source

HLR_IOG20_APG40

Source Field

OMSIF

Source Section

SS7TOTAL

ONEPCNT

Number of subscribers with at least one PDP-Context defined

Data Source

HLR_IOG20_APG40

Source Field

ONEPCNT

Source Section

PDPDEF

OUMSU

Number of originating SCCP/UP MSU's

Data Source

HLR_IOG20_APG40

Source Field

OUMSU

Source Section

SS7TOTAL

OUSIF

Number of originating SCCP/UP MSU octets

Data Source

HLR_IOG20_APG40

Source Field

OUSIF

Source Section

SS7TOTAL

P95FPHGT

Number of sampled translated MSUs failing normal-load 95% test for CP handling time

Data Source

HLR_IOG20_APG40

Source Field

P95FPHGT

Source Section

SS7TOTAL

P95FPHNT

Number of sampled non-translated MSUs failing normal-load 95% test for CP handling time

Data Source

HLR_IOG20_APG40

Source Field

P95FPHNT

Source Section

SS7TOTAL

PERLEN

Period Length

RFNETCONG

Counter for routing failure, network congestion

Data Source

HLR_IOG20_APG40

Source Field

RFNETCONG

Source Section

C7SCPERF

RFNETFAIL

Counter for routing failure, network failure (MTP or SCCP failure)

Data Source

HLR_IOG20_APG40

Source Field

RFNETFAIL

Source Section

C7SCPERF

RFSPADDR

Counter for routing failure, no translation for this specific address

Data Source

HLR_IOG20_APG40

Source Field

RFSPADDR

Source Section

C7SCPERF

RFSSNFAIL

Counter for routing failure, subsystem failure

Data Source

HLR_IOG20_APG40

Source Field

RFSSNFAIL

Source Section

C7SCPERF

RFSUADDR

Counter for routing failure, no translation for address of such nature

Data Source

HLR_IOG20_APG40

Source Field

RFSUADDR

Source Section

C7SCPERF

RFUNEQUIP

Counter for routing failure, unequipped user

Data Source

HLR_IOG20_APG40

Source Field

RFUNEQUIP

Source Section

C7SCPERF

RFUNQUAL

Counter for routing failure, reason unqualified

Data Source

HLR_IOG20_APG40

Source Field

RFUNQUAL

Source Section

C7SCPERF

rg_reap

ReportGenerator Internal Count

SAMPPHGT

Number of MSUs requiring GTT, sampled for CP handling time

Data Source

HLR_IOG20_APG40

Source Field

SAMPPHGT

Source Section

SS7TOTAL

SAMPPHNT

Number of MSUs not requiring GTT, sampled for CP handling time

Data Source

HLR_IOG20_APG40

Source Field

SAMPPHNT

Source Section

SS7TOTAL

SIZEDS

Memory size of data store

Data Source

HLR_IOG20_APG40

Source Field

SIZEDS

Source Section

CP

SIZEPS

Memory size of program store/main store

Data Source

HLR_IOG20_APG40

Source Field

SIZEPS

Source Section

CP

SIZERS

Memory size of reference store

Data Source

HLR_IOG20_APG40

Source Field

SIZERS

Source Section

CP

SUBSQUINT

Subscribers having UMTS Authentication vectors (quintets)

Data Source

STS_HLR

Source Field

SUBSQUINT

Source Section

AUTHSUBS

SUBSTRIPL

Subscribers having GSM Authentication vectors (triplets)

Data Source

STS_HLR

Source Field

SUBSTRIPL

Source Section

AUTHSUBS

SYERROR

Counter for syntax error detected

Data Source

HLR_IOG20_APG40

Source Field

SYERROR

Source Section

C7SCPERF

TIMEPHGT

Accumulated total of CP handling time for sampled GTT MSUs in ms

Data Source

HLR_IOG20_APG40

Source Field

TIMEPHGT

Source Section

SS7TOTAL

TIMEPHNT

Accumulated total of CP handling time for sampled non-translated MSUs in ms

Data Source

HLR_IOG20_APG40

Source Field

TIMEPHNT

Source Section

SS7TOTAL

TMMSU

Number of terminating management MSU's

Data Source

HLR_IOG20_APG40

Source Field

TMMSU

Source Section

SS7TOTAL

TMSIF

Number of terminating management SIF octets

Data Source

HLR_IOG20_APG40

Source Field

TMSIF

Source Section

SS7TOTAL

TOTSCBUF1

Total number of simultaneous buffers of 256 octet length

Data Source

HLR_IOG20_APG40

Source Field

TOTSCBUF1

Source Section

C7SCCPUSE

TOTSCBUF2

Total number of simultaneous buffers of 512 octet length

Data Source

HLR_IOG20_APG40

Source Field

TOTSCBUF2

Source Section

C7SCCPUSE

TOTSCBUF3

Total number of simultaneous buffers of 1024 octet length

Data Source

HLR_IOG20_APG40

Source Field

TOTSCBUF3

Source Section

C7SCCPUSE

TOTSCBUF4

Total number of simultaneous buffers of 2048 octet length

Data Source

HLR_IOG20_APG40

Source Field

TOTSCBUF4

Source Section

C7SCCPUSE

TUMSU

Number of terminating SCCP/UP MSU's

Data Source

HLR_IOG20_APG40

Source Field

TUMSU

Source Section

SS7TOTAL

TUSIF

Number of terminating SCCP/UP SIF octets

Data Source

HLR_IOG20_APG40

Source Field

TUSIF

Source Section

SS7TOTAL

UDTREC

Counter for UDT messages received from MTP

Data Source

HLR_IOG20_APG40

Source Field

UDTREC

Source Section

C7SCQOS

UDTSENT

Counter for UDT messages sent to MTP

Data Source

HLR_IOG20_APG40

Source Field

UDTSENT

Source Section

C7SCQOS

UDTSREC

Counter for UDTS messages received from MTP

Data Source

HLR_IOG20_APG40

Source Field

UDTSREC

Source Section

C7SCQOS

UDTSSENT

Counter for UDTS messages sent to MTP

Data Source

HLR_IOG20_APG40

Source Field

UDTSSENT

Source Section

C7SCQOS

XUDTREC

Counter for XUDT messages received from MTP

Data Source

HLR_IOG20_APG40

Source Field

XUDTREC

Source Section

C7SCQOS

XUDTSENT

Counter for XUDT messages sent to MTP

Data Source

HLR_IOG20_APG40

Source Field

XUDTSENT

Source Section

C7SCQOS

XUDTSREC

Counter for XUDTS messages received from MTP

Data Source

HLR_IOG20_APG40

Source Field

XUDTSREC

Source Section

C7SCQOS

XUDTSSENT

Counter for XUDTS messages sent to MTP

Data Source

HLR_IOG20_APG40

Source Field

XUDTSSENT

Source Section

C7SCQOS

HLR_NI Primitive Calculations

The following is a list of primitive calculations for the HLR_NI entity.

GRAPHmultiLineSeparator

Special Control Field for Multi-Line Graphs

Calculation

```
""
```

LocalName

HLR_NI Name

Calculation

```
LocalKey
```

NUMDAYS

of days in Report

Calculation

```
DAYSINREPORT()
```

NUMHOURS

of hours in Summation Data

Calculation

HLR_NI Peg Counts

The following is a list of peg counts for the HLR_NI entity.

rg_reap

ReportGenerator Internal Count

HLR_SAE Primitive Calculations

The following is a list of primitive calculations for the HLR_SAE entity.

GRAPHmultiLineSeparator

Special Control Field for Multi-Line Graphs

Calculation

```
""
```

INTERVALS

Number of 60 minute intervals covered

Calculation

```
PERLEN / (1.0 * 60)
```

NUMDAYS

of days in Report

Calculation

```
DAYSINREPORT()
```

NUMHOURS

of hours in Summation Data

Calculation

VENDORTECH

Vendor Technology

Calculation

```
isNull( PERLEN ) ? nullString() : "EricssonGSM"
```

HLR_SAE Peg Counts

The following is a list of peg counts for the HLR_SAE entity.

HLR_RELEASE

Release

ID1

Block number

Data Source

HLR_IOG20_APG40

Source Field

ID1

Source Section

SAE

ID2

SAE

Data Source

HLR_IOG20_APG40

Source Field

ID2

Source Section

SAE

NCALLS

Number of seizure attempts of an SAE 500 individual

Data Source

HLR_IOG20_APG40

Source Field

NCALLS

Source Section

SAE

NIND

Number of individuals assigned by command to SAE 500

Data Source

HLR_IOG20_APG40

Source Field

NIND

Source Section

SAE

NOVERFLOW

Number of unsuccessful seizure attempts of an SAE 500 individual

Data Source

HLR_IOG20_APG40

Source Field

NOVERFLOW

Source Section

SAE

NSCAN

Number of scans - Incremented each time counter NTRAL is scanned

Data Source

HLR_IOG20_APG40

Source Field

NSCAN

Source Section

SAE

NTRAL

Number of SAE 500 individuals seized at a given instant

Data Source

HLR_IOG20_APG40

Source Field

NTRAL

Source Section

SAE

NTRALACC

Accumulated value of NTRAL obtained during NSCAN scans

Data Source

HLR_IOG20_APG40

Source Field

NTRALACC

Source Section

SAE

PERLEN

Period Length

rg_reap

ReportGenerator Internal Count

HLR_SAE_Block Primitive Calculations

The following is a list of primitive calculations for the HLR_SAE_Block entity.

GRAPHmultiLineSeparator

Special Control Field for Multi-Line Graphs

Calculation

```
""
```

NUMDAYS

of days in Report

Calculation

```
DAYSINREPORT()
```

NUMHOURS

of hours in Summation Data

Calculation

HLR_SAE_Block Peg Counts

The following is a list of peg counts for the HLR_SAE_Block entity.

rg_reap

ReportGenerator Internal Count

HLR_SPG Primitive Calculations

The following is a list of primitive calculations for the HLR_SPG entity.

GRAPHmultiLineSeparator

Special Control Field for Multi-Line Graphs

Calculation

```
""
```

NUMDAYS

of days in Report

Calculation

```
DAYSINREPORT()
```

NUMHOURS

of hours in Summation Data

Calculation

HLR_SPG Peg Counts

The following is a list of peg counts for the HLR_SPG entity.

rg_reap

ReportGenerator Internal Count

HLR_SPNode Primitive Calculations

The following is a list of primitive calculations for the HLR_SPNode entity.

GRAPHmultiLineSeparator

Special Control Field for Multi-Line Graphs

Calculation

```
""
```

INTERVALS

Number of 60 minute intervals covered

Calculation

```
PERLEN / (1.0 * 60)
```

NUMDAYS

of days in Report

Calculation

```
DAYSINREPORT()
```

NUMHOURS

of hours in Summation Data

Calculation

VENDORTECH

Vendor Technology

Calculation

```
isNull( PERLEN ) ? nullString() : "EricssonGSM"
```

HLR_SPNode Peg Counts

The following is a list of peg counts for the HLR_SPNode entity.

ACCFRPM

Free memory storage (kbytes), accumulated

Data Source

HLR_IOG20_APG40

Source Field

ACCFRPM

Source Section

SPSP

ACCLOAD

CPU load (percent), accumulated. The measurements are made from priority level 6 and upwards

Data Source

HLR_IOG20_APG40

Source Field

ACCLOAD

Source Section

SPSP

ACCSPIST

Accumulated time (in minutes) when the SP has been in state ISOLATED

Data Source

HLR_IOG20_APG40

Source Field

ACCSPIST

Source Section

SPSP

DATALOSTFLAG

Lost data flag

Data Source

HLR_IOG20_APG40

Source Field

DATALOSTFLAG

Source Section

SPSP

HLR_RELEASE

Release

MAXFRPM

Maximum memory free storage (kbytes)

Data Source

HLR_IOG20_APG40

Source Field

MAXFRPM

Source Section

SPSP

MINFRPM

Minimum free memory storage (kbytes)

Data Source

HLR_IOG20_APG40

Source Field

MINFRPM

Source Section

SPSP

NOLRGUPFMS

Number of ordered large updates of FMS

Data Source

HLR_IOG20_APG40

Source Field

NOLRGUPFMS

Source Section

SPSP

NOSMUPFMS

Number of ordered small updates of FMS

Data Source

HLR_IOG20_APG40

Source Field

NOSMUPFMS

Source Section

SPSP

NPERREL

Number of performed restarts with reload

Data Source

HLR_IOG20_APG40

Source Field

NPERREL

Source Section

SPSP

NPERRES

Number of performed restarts without reload

Data Source

HLR_IOG20_APG40

Source Field

NPERRES

Source Section

SPSP

NRELA

Number of ordered restarts with reload, automatically initiated

Data Source

HLR_IOG20_APG40

Source Field

NRELA

Source Section

SPSP

NRELM

Number of ordered restarts with reload, manually initiated

Data Source

HLR_IOG20_APG40

Source Field

NRELM

Source Section

SPSP

NRESA

Number of ordered restarts without reload, automatically initiated

Data Source

HLR_IOG20_APG40

Source Field

NRESA

Source Section

SPSP

NRESM

Number of ordered restarts without reload, manually initiated

Data Source

HLR_IOG20_APG40

Source Field

NRESM

Source Section

SPSP

NSCAN

Number of accumulations (scannings)

Data Source

HLR_IOG20_APG40

Source Field

NSCAN

Source Section

SPSP

PERLEN

Period Length

rg_reap

ReportGenerator Internal Count

SIZEPM

Total storage allocated (kbytes)

Data Source

HLR_IOG20_APG40

Source Field

SIZEPM

Source Section

SPSP

HLR_SS7Dest Primitive Calculations

The following is a list of primitive calculations for the HLR_SS7Dest entity.

GRAPHmultiLineSeparator

Special Control Field for Multi-Line Graphs

Calculation

""

Updated: 2009-07-22

INTERVALS

Number of 60 minute intervals covered

Calculation

```
PERLEN / (1.0 * 60)
```

LocalName

HLR_C7Dest Name

Calculation

```
LocalKey
```

NUMDAYS

of days in Report

Calculation

```
DAYSINREPORT()
```

NUMHOURS

of hours in Summation Data

Calculation

VENDORTECH

Vendor Technology

Calculation

```
isNull( PERLEN ) ? nullString() : "EricssonGSM"
```

HLR_SS7Dest Peg Counts

The following is a list of peg counts for the HLR_SS7Dest entity.

HLR_RELEASE

Release

MSGSND

Counter for messages sent to a back-up node

Data Source

HLR_IOG20_APG40

Source Field

MSGSND

Source Section

C7SCSIGP

PERLEN

Period Length

rg_reap

ReportGenerator Internal Count

SYS7IND_HLR_C7SCSIGP

State

Data Source

HLR_IOG20_APG40

Source Field

SYS7IND

Source Section

C7SCSIGP

HLR_SS7HSLPrmGrp Primitive Calculations

The following is a list of primitive calculations for the HLR_SS7HSLPrmGrp entity.

GRAPHmultiLineSeparator

Special Control Field for Multi-Line Graphs

Calculation

""

LocalName

HLR_SS7HSLPrmGrp Name

Calculation

```
LocalKey
```

NUMDAYS

of days in Report

Calculation

```
DAYSINREPORT()
```

NUMHOURS

of hours in Summation Data

Calculation

VENDORTECH

Vendor Tech

Calculation

```
isNull( PERLEN ) ? nullString() : "EricssonGSM"
```

HLR_SS7HSLPrmGrp Peg Counts

The following is a list of peg counts for the HLR_SS7HSLPrmGrp entity.

ALPHA

A (alpha), exponential smoothing factor

Data Source

HLR_IOG20_APG40

Source Field

ALPHA

Source Section

SS7HSLPG1

CNGABTH1

Value of congestion abatement for level 1, CNGABTH1 = (number of octets in TR/RTB buffer when level 1 is reached / 1000)

Data Source

HLR_IOG20_APG40

Source Field

CNGABTH1

Source Section

SS7HSLPG2

CNGABTH2

Value of congestion abatement for level 2, CNGABTH2 = (number of octets in TR/RTB buffer when level 2 is reached / 1000)

Data Source

HLR_IOG20_APG40

Source Field

CNGABTH2

Source Section

SS7HSLPG2

CNGABTH3

Value of congestion abatement for level 3, CNGABTH3 = (number of octets in TR/RTB buffer when level 3 is reached / 1000)

Data Source

HLR_IOG20_APG40

Source Field

CNGABTH3

Source Section

SS7HSLPG2

CNGDITH1

Value of congestion discard for level 1, CNGDITH1 = (number of octets in TR/RTB buffer when level 1 is reached / 1000)

Data Source

HLR_IOG20_APG40

Source Field

CNGDITH1

Source Section

SS7HSLPG2

CNGDITH2

Value of congestion discard for level 2, CNGDITH2 = (number of octets in TR/RTB buffer when level 2 is reached / 1000)

Data Source

HLR_IOG20_APG40

Source Field

CNGDITH2

Source Section

SS7HSLPG2

CNGDITH3

Value of congestion discard for level 3, CNGDITH3 = (number of octets in TR/RTB buffer when level 3 is reached / 1000)

Data Source

HLR_IOG20_APG40

Source Field

CNGDITH3

Source Section

SS7HSLPG2

CNGONTH1

Value of congestion onset for level 1, CNGONTH1 = (number of octets in TB/RTB buffer when level 1 is reached / 1000).

Data Source

HLR_IOG20_APG40

Source Field

CNGONTH1

Source Section

SS7HSLPG2

CNGONTH2

Value of congestion onset for level 2, CNGONTH2 = (number of octets in TB/RTB buffer when level 2 is reached / 1000).

Data Source

HLR_IOG20_APG40

Source Field

CNGONTH2

Source Section

SS7HSLPG2

CNGONTH3

Value of congestion onset for level 3, CNGONTH3 = (number of octets in TB/RTB buffer when level 3 is reached / 1000)

Data Source

HLR_IOG20_APG40

Source Field

CNGONTH3

Source Section

SS7HSLPG2

HLR_RELEASE

HLR Release

LT1UNACK

Timer_CC, time between transmission of unacknowledged BGN, END, ER, or RS PDUs

Data Source

HLR_IOG20_APG40

Source Field

LT1UNACK

Source Section

SS7HSLPG1

LTBLCKSZ

T_sup, superblock size

Data Source

HLR_IOG20_APG40

Source Field

LTBLCKSZ

Source Section

SS7HSLPG1

LTFORPRV

Timer_FORCE-PROVING, force proving

Data Source

HLR_IOG20_APG40

Source Field

LTFORPRV

Source Section

SS7HSLPG1

LTKPALIV

Timer_KEEP-ALIVE, "keep alive" for 3622 cells/sec signalling rate

Data Source

HLR_IOG20_APG40

Source Field

LTKPALIV

Source Section

SS7HSLPG1

LTMAXPDU

Timer_NO-RESPONSE, maximum time interval during which at least one STAT PDU must be received

Data Source

HLR_IOG20_APG40

Source Field

LTMAXPDU

Source Section

SS7HSLPG1

LTMXIDLE

Timer_IDLE, maximum time of the IDLE phase of an SSCOP connection

Data Source

HLR_IOG20_APG40

Source Field

LTMXIDLE

Source Section

SS7HSLPG1

LTNOCRED

Timer_NO-CREDIT, maximum interval without credit

Data Source

HLR_IOG20_APG40

Source Field

LTNOCRED

Source Section

SS7HSLPG1

LTPRVPDU

Timer_T3, time between proving PDUs in 1ms

Data Source

HLR_IOG20_APG40

Source Field

LTPRVPDU

Source Section

SS7HSLPG1

LTPULLRT

Timer_POLL, "Poll" for 3622 cells/sec signalling rate

Data Source

HLR_IOG20_APG40

Source Field

LTPULLRT

Source Section

SS7HSLPG1

LTSCCFAL

Timer_T2, time SSCF will attempt alignment

Data Source

HLR_IOG20_APG40

Source Field

LTSCCFAL

Source Section

SS7HSLPG1

LTSCCOPR

Timer_REPEAT-SREC, minimum interval between reports of an SSCOP recovery

Data Source

HLR_IOG20_APG40

Source Field

LTSCCOPR

Source Section

SS7HSLPG1

LTSETALG

Timer_T1, time between link release and re-establishment during alignment

Data Source

HLR_IOG20_APG40

Source Field

LTSETALG

Source Section

SS7HSLPG1

LTSTATLS

T_loss, STAT loss limit

Data Source

HLR_IOG20_APG40

Source Field

LTSTATLS

Source Section

SS7HSLPG1

LTTAUERR

T (tau), error monitoring interval

Data Source

HLR_IOG20_APG40

Source Field

LTTAUERR

Source Section

SS7HSLPG1

MONEREVT

N, Monitoring intervals after 400ms error event

Data Source

HLR_IOG20_APG40

Source Field

MONEREVT

Source Section

SS7HSLPG1

MONINTER

N_blk, monitoring intervals per block

Data Source

HLR_IOG20_APG40

Source Field

MONINTER

Source Section

SS7HSLPG1

NMXSDPDU

MaxPD, maximum number of SD PDUs sent between POLL PDUs

Data Source

HLR_IOG20_APG40

Source Field

NMXSDPDU

Source Section

SS7HSLPG1

NMXSTPDU

MaxSTAT, maximum number of list elements in a STAT PDU

Data Source

HLR_IOG20_APG40

Source Field

NMXSTPDU

Source Section

SS7HSLPG1

NMXUNACK

MaxCC, maximum number of unacknowledged BGN, END, ER, or RS PDUs

Data Source

HLR_IOG20_APG40

Source Field

NMXUNACK

Source Section

SS7HSLPG1

PDUSENTP

N1, PDUs sent during normal proving

Data Source

HLR_IOG20_APG40

Source Field

PDUSENTP

Source Section

SS7HSLPG1

PERLEN

Period Length

rg_reap

ReportGenerator Internal Count

SCCOPPDU

Max_NRP, maximum number of retransmitted SSCOP PDUs permissible for link proving

Data Source

HLR_IOG20_APG40

Source Field

SCCOPPDU

Source Section

SS7HSLPG1

THRSRUNQ

Thres, threshold for comparing the running Quality of Service

Data Source

HLR_IOG20_APG40

Source Field

THRSRUNQ

Source Section

SS7HSLPG1

HLR_SS7Link Primitive Calculations

The following is a list of primitive calculations for the HLR_SS7Link entity.

GRAPHmultiLineSeparator

Special Control Field for Multi-Line Graphs

Calculation

```
""
```

INTERVALS

Number of 60 minute intervals covered

Calculation

```
PERLEN / (1.0 * 60)
```

INTERVALS_C7TM

Number of 60 minute intervals covered (from C7TMFILE data)

Calculation

```
PERLEN_C7TM / (1.0 * 60)
```

LocalName

HLR_C7Link Name

Calculation

```
LocalKey
```

NUMDAYS

of days in Report

Calculation

```
DAYSINREPORT()
```

NUMHOURS

of hours in Summation Data

Calculation

VENDORTECH

Vendor Technology

Updated: 2009-07-22

Calculation

```
isNull( PERLEN ) ? nullString() : "EricssonGSM"
```

HLR_SS7Link Peg Counts

The following is a list of peg counts for the HLR_SS7Link entity.

ACHGOVRS

Number of automatic changeovers

Data Source

HLR_IOG20_APG40

Source Field

ACHGOVRS

Source Section

SS7SLMT2

ACHGOVRS_SS7HSLMT2

Number of automatic changeovers

Data Source

HLR_IOG20_APG40

Source Field

ACHGOVRS

Source Section

SS7HSLMT2

ALGNFLRS_SS7HSLMT2

Signalling link alignment failures

Data Source

HLR_IOG20_APG40

Source Field

ALGNFLRS

Source Section

SS7HSLMT2

ASLDUR

Duration of link in In-Service state in seconds.

Data Source

HLR_IOG20_APG40

Source Field

ASLDUR

Source Section

C7SL1

CDISCONX_SS7HSLMT3

Number of abnormal occurrences of SSCOP Connection Disconnect

Data Source

HLR_IOG20_APG40

Source Field

CDISCONX

Source Section

SS7HSLMT3

CGSTEVL_SS7HSLMT1

Current link transmit congestion level

Data Source

HLR_IOG20_APG40

Source Field

CGSTEVL

Source Section

SS7HSLMT1

CGSTLEVL

Current Link Transmit Congestion Level

Data Source

HLR_IOG20_APG40

Source Field

CGSTLEVL

Source Section

SS7SLMT1

CGSTSTAT

Current Link Transmit Congestion State

Data Source

HLR_IOG20_APG40

Source Field

CGSTSTAT

Source Section

SS7SLMT1

CGSTSTAT_SS7HSLMT1

Current link transmit congestion state

Data Source

HLR_IOG20_APG40

Source Field

CGSTSTAT

Source Section

SS7HSLMT1

CHOVERS

Number of occurrences of local automatic changeover

Data Source

HLR_IOG20_APG40

Source Field

CHOVERS

Source Section

C7SL1

CLUSTERCODE_HLR_SS7SLMT1

SS7 Link Cluster code

Data Source

HLR_IOG20_APG40

Source Field

CLUSTERCODE

Source Section

SS7SLMT1

CLUSTERCODE_HLR_SS7SLMT2

SS7 Link Cluster code

Data Source

HLR_IOG20_APG40

Source Field

CLUSTERCODE

Source Section

SS7SLMT2

CLUSTERCODE_HLR_SS7SLTRAFF

SS7 Link Cluster code

Data Source

HLR_IOG20_APG40

Source Field

CLUSTERCODE

Source Section

SS7SLTRAFF

CNRECONX_SS7HSLMT3

Number of SSCOP Connection Reestablishment/Resynchronizations

Data Source

HLR_IOG20_APG40

Source Field

CNRECONX

Source Section

SS7HSLMT3

CNSUMERS_SS7HSLMT3

A SSCOP Connection sum of errors counter.That is the sum of CDISCONX and INITFLRS

Data Source

HLR_IOG20_APG40

Source Field

CNSUMERS

Source Section

SS7HSLMT3

CONCNT1

Number of occurrences of SL congestion indications level 1

Data Source

HLR_IOG20_APG40

Source Field

CONCNT1

Source Section

C7SL2

CONCNT2

Number of occurrences of SL congestion indications level 2

Data Source

HLR_IOG20_APG40

Source Field

CONCNT2

Source Section

C7SL2

CONCNT3

Number of occurrences of SL congestion indications level 3

Data Source

HLR_IOG20_APG40

Source Field

CONCNT3

Source Section

C7SL2

CONDUR1

Cumulative duration of SL congestion level 1 in seconds

Data Source

HLR_IOG20_APG40

Source Field

CONDUR1

Source Section

C7SL2

CONDUR2

Cumulative duration of SL congestion level 2 in seconds

Data Source

HLR_IOG20_APG40

Source Field

CONDUR2

Source Section

C7SL2

CONDUR3

Cumulative duration of SL congestion level 3 in seconds

Data Source

HLR_IOG20_APG40

Source Field

CONDUR3

Source Section

C7SL2

CONSTOP1

Number of indications of stop of SL congestion level 1

Data Source

HLR_IOG20_APG40

Source Field

CONSTOP1

Source Section

C7SL2

CONSTOP2

Number of indications of stop of SL congestion level 2

Data Source

HLR_IOG20_APG40

Source Field

CONSTOP2

Source Section

C7SL2

CONSTOP3

Number of indications of stop of SL congestion level 3

Data Source

HLR_IOG20_APG40

Source Field

CONSTOP3

Source Section

C7SL2

DCLRFAIL

Indication of Link Declared Failure State

Data Source

HLR_IOG20_APG40

Source Field

DCLRFAIL

Source Section

SS7SLMT1

DCLRFAIL_SS7HSLMT1

Indication of link declared failure state

Data Source

HLR_IOG20_APG40

Source Field

DCLRFAIL

Source Section

SS7HSLMT1

DCONG_HLR

Cumulative duration of SL congestion (in s).

Data Source

HLR_C7TMFILE

Source Field

DCONG

Source Section

ASC_CCITT7

DDCFLABN

Duration of SL declared failures due to abnormal FIBR/BNSR in 10 sec. Units

Data Source

HLR_IOG20_APG40

Source Field

DDCFLABN

Source Section

SS7SLMT2

DDCFLHWP

Duration of SL declared failures due to due to hardware problems in 10 sec. Units

Data Source

HLR_IOG20_APG40

Source Field

DDCFLHWP

Source Section

SS7SLMT2

DDCFLHWP_SS7HSLMT2

Duration of signalling link declared failures due to hardware problems in 10 sec units

Data Source

HLR_IOG20_APG40

Source Field

DDCFLHWP

Source Section

SS7HSLMT2

DDCFLXDA

Duration of SL declared failures due to excessive delay of acknowledgement in 10 sec. Units

Data Source

HLR_IOG20_APG40

Source Field

DDCFLXDA

Source Section

SS7SLMT2

DDCFLXDA_SS7HSLMT2

Duration of signalling link declared failures due to excessive delay of acknowledgement in 10 sec units

Data Source

HLR_IOG20_APG40

Source Field

DDCFLXDA

Source Section

SS7HSLMT2

DDCFLXDC

Duration of SL declared failures due to excessive duration of congestion

Data Source

HLR_IOG20_APG40

Source Field

DDCFLXDC

Source Section

SS7SLMT2

DDCFLXDC_SS7HSLMT2

Duration of signalling link declared failures due to excessive duration of congestion in 10 sec units

Data Source

HLR_IOG20_APG40

Source Field

DDCFLXDC

Source Section

SS7HSLMT2

DDCFLXER

Duration of SL declared failures due to excessive error rate in10 sec. Units

Data Source

HLR_IOG20_APG40

Source Field

DDCFLXER

Source Section

SS7SLMT2

DDCFLXER_SS7HSLMT2

Duration of signalling link declared failures due to excessive error rate in 10 sec units

Data Source

HLR_IOG20_APG40

Source Field

DDCFLXER

Source Section

SS7HSLMT2

DISMSU1

Number of occurrences of MSUs discarded due to SL congestion level 1

Data Source

HLR_IOG20_APG40

Source Field

DISMSU1

Source Section

C7SL2

DISMSU2

Number of occurrences of MSUs discarded due to SL congestion level 2

Data Source

HLR_IOG20_APG40

Source Field

DISMSU2

Source Section

C7SL2

DISMSU3

Number of occurrences of MSUs discarded due to SL congestion level 3

Data Source

HLR_IOG20_APG40

Source Field

DISMSU3

Source Section

C7SL2

DRBSYDCL

Duration of link busy status declared by near-end signaling terminal in 50 ms. Units

Data Source

HLR_IOG20_APG40

Source Field

DRBSYDCL

Source Section

SS7SLMT1

DRBSYDCL_SS7HSLMT1

Duration of link busy status declared by near-end signalling terminal in 50 ms units

Data Source

HLR_IOG20_APG40

Source Field

DRBSYDCL

Source Section

SS7HSLMT1

DRBSYRCD

Duration of busy-link status unit received from far-end in 50 ms. Units

Data Source

HLR_IOG20_APG40

Source Field

DRBSYRCD

Source Section

SS7SLMT1

DRDCLFLR

Duration of SL declared failures, - All types in 10 sec. Units

Data Source

HLR_IOG20_APG40

Source Field

DRDCLFLR

Source Section

SS7SLMT2

DRDCLFLR_SS7HSLMT2

Duration of signalling link declared failures, all types, in 10 sec units

Data Source

HLR_IOG20_APG40

Source Field

DRDCLFLR

Source Section

SS7HSLMT2

DRFEPRO

Duration of far-end processor outage in 10 sec. Units

Data Source

HLR_IOG20_APG40

Source Field

DRFEPRO

Source Section

SS7SLMT1

DRFEPRO_SS7HSLMT1

Duration of Far-end Processor Outage in 10 second units

Data Source

HLR_IOG20_APG40

Source Field

DRFEPRO

Source Section

SS7HSLMT1

DRLCLPRO

Duration of near-end processor outage in 10 sec. Units

Data Source

HLR_IOG20_APG40

Source Field

DRLCLPRO

Source Section

SS7SLMT2

DRLCLPRO_SS7HSLMT2

Duration of near-end processor outage in 10 second units

Data Source

HLR_IOG20_APG40

Source Field

DRLCLPRO

Source Section

SS7HSLMT2

DRLKFAIL

Duration of SL failures (declared and undeclared) in 10 sec. Units

Data Source

HLR_IOG20_APG40

Source Field

DRLKFAIL

Source Section

SS7SLMT2

DRLKINHB

Duration of signalling link management inhibits in 10 sec. Units

Data Source

HLR_IOG20_APG40

Source Field

DRLKINHB

Source Section

SS7SLMT2

DRLKINHB_SS7HSLMT2

Duration of signalling link management inhibits in 10 sec units

Data Source

HLR_IOG20_APG40

Source Field

DRLKINHB

Source Section

SS7HSLMT2

DRNOCRED_SS7HSLMT3

Cumulative duration of time in seconds

Data Source

HLR_IOG20_APG40

Source Field

DRNOCRED

Source Section

SS7HSLMT3

DUNAV_HLR

Duration of SL Not-In-Service (in seconds).

Data Source

HLR_C7TMFILE

Source Field

DUNAV

Source Section

ASC_CCITT7

ECCNGLV1

Number of times SL enters level 1 congestion state

Data Source

HLR_IOG20_APG40

Source Field

ECCNGLV1

Source Section

SS7SLMT1

ECCNGLV1_SS7HSLMT1

Number of times a signalling link enters level 1 congestion state

Data Source

HLR_IOG20_APG40

Source Field

ECCNGLV1

Source Section

SS7HSLMT1

ECCNGLV2

Number of times SL enters level 2 congestion state

Data Source

HLR_IOG20_APG40

Source Field

ECCNGLV2

Source Section

SS7SLMT1

ECCNGLV2_SS7HSLMT1

Number of times a signalling link enters level 2 congestion state

Data Source

HLR_IOG20_APG40

Source Field

ECCNGLV2

Source Section

SS7HSLMT1

ECCNGLV3

Number of times SL enters level 3 congestion state

Data Source

HLR_IOG20_APG40

Source Field

ECCNGLV3

Source Section

SS7SLMT1

ECCNGLV3_SS7HSLMT1

Number of times a signalling link enters level 3 congestion state

Data Source

HLR_IOG20_APG40

Source Field

ECCNGLV3

Source Section

SS7HSLMT1

ERRSEC

Number of errored seconds

Data Source

HLR_IOG20_APG40

Source Field

ERRSEC

Source Section

SS7SLTRAFF

ERRSEC_SS7HSLTRAF

Number of errored seconds for SAAL, ATM and Physical layers

Data Source

HLR_IOG20_APG40

Source Field

ERRSEC

Source Section

SS7HSLTRAF

FARMGINH

Number of far-end management inhibits

Data Source

HLR_IOG20_APG40

Source Field

FARMGINH

Source Section

SS7SLMT2

FARMGINH_SS7HSLMT2

Number of far-end management inhibits

Data Source

HLR_IOG20_APG40

Source Field

FARMGINH

Source Section

SS7HSLMT2

HDRDSCDS_SS7HSLMT3

Number of incoming ATM cells discarded due to protocol (ATM-layer Header) errors

Data Source

HLR_IOG20_APG40

Source Field

HDRDSCDS

Source Section

SS7HSLMT3

HECDSCDS_SS7HSLMT3

Number of incoming ATM cells discarded due to Header Error Control (HEC) violations

Data Source

HLR_IOG20_APG40

Source Field

HECDSCDS

Source Section

SS7HSLMT3

HLR_RELEASE

Release

ICUICELS_SS7HSLTRAF

Number of incoming (received) ATM user-information (UI) cells

Data Source

HLR_IOG20_APG40

Source Field

ICUICELS

Source Section

SS7HSLTRAF

ILS_HLR_SS7SLMT1

Link Set Pointer

Data Source

HLR_IOG20_APG40

Source Field

ILS

Source Section

SS7SLMT1

ILS_HLR_SS7SLTRAFF

Link Set Pointer

Data Source

HLR_IOG20_APG40

Source Field

ILS

Source Section

SS7SLTRAFF

INCCELLS_SS7HSLTRAF

Number of incoming (received) NDC-valid ATM cells

Data Source

HLR_IOG20_APG40

Source Field

INCCELLS

Source Section

SS7HSLTRAF

INITFLRS_SS7HSLMT3

Number of SSCOP Connection Initiation Failures

Data Source

HLR_IOG20_APG40

Source Field

INITFLRS

Source Section

SS7HSLMT3

INVLPDUS_SS7HSLMT3

Number of invalid SSCOP PDUs received

Data Source

HLR_IOG20_APG40

Source Field

INVLPDUS

Source Section

SS7HSLMT3

LACKCRED_SS7HSLMT3

Number of times that SSCOP had PDUs to send to its peer but could not do so because it was not given credit by the far end

Data Source

HLR_IOG20_APG40

Source Field

LACKCRED

Source Section

SS7HSLMT3

LBUSDUR

Duration of local busy in 100ms units

Data Source

HLR_IOG20_APG40

Source Field

LBUSDUR

Source Section

C7SL1

LINHNO

Number of occurrences of local management inhibit

Data Source

HLR_IOG20_APG40

Source Field

LINHNO

Source Section

C7SL1

LKMTCST

Maintenance state (same as 'signalling link service status')

Data Source

HLR_IOG20_APG40

Source Field

LKMTCST

Source Section

SS7SLMT1

LKMTCST_SS7HSLMT1

Maintenance state (same as 'signalling link service status')

Data Source

HLR_IOG20_APG40

Source Field

LKMTCST

Source Section

SS7HSLMT1

LOCINHDUR

Duration of SL inhibition due to local management action in seconds

Data Source

HLR_IOG20_APG40

Source Field

LOCINHDUR

Source Section

C7SL1

LOFMSU1

Number of congestion events resulting in loss of MSUs level 1

Data Source

HLR_IOG20_APG40

Source Field

LOFMSU1

Source Section

C7SL2

LOFMSU2

Number of congestion events resulting in loss of MSUs level 2

Data Source

HLR_IOG20_APG40

Source Field

LOFMSU2

Source Section

C7SL2

LOFMSU3

Number of congestion events resulting in loss of MSUs level 3

Data Source

HLR_IOG20_APG40

Source Field

LOFMSU3

Source Section

C7SL2

LS10SCAN

Number of 10 second scans in S7LS

Data Source

HLR_IOG20_APG40

Source Field

LS10SCAN

Source Section

SS7SLMT2

LS10SCAN_SS7HSLMT2

Number of 10 sec scans in S7LS

Data Source

HLR_IOG20_APG40

Source Field

LS10SCAN

Source Section

SS7HSLMT2

LSID_HLR

C7 Linkset ID

Data Source

HLR_C7TMFILE

Source Field

LSID

Source Section

ASC_CCITT7

MCHGOVRS

Number of near-end manual changeovers 17 Value of hourly link maintenance threshold

Data Source

HLR_IOG20_APG40

Source Field

MCHGOVRS

Source Section

SS7SLMT2

MCHGOVRS_SS7HSLMT2

Number of near-end manual changeovers

Data Source

HLR_IOG20_APG40

Source Field

MCHGOVRS

Source Section

SS7HSLMT2

MEMBERCODE_HLR_SS7SLMT1

SS7 Cluster Member Code

Data Source

HLR_IOG20_APG40

Source Field

MEMBERCODE

Source Section

SS7SLMT1

MEMBERCODE_HLR_SS7SLMT2

SS7 Cluster Member Code

Data Source

HLR_IOG20_APG40

Source Field

MEMBERCODE

Source Section

SS7SLMT2

MEMBERCODE_HLR_SS7SLTRAFF

SS7 Cluster Member Code

Data Source

HLR_IOG20_APG40

Source Field

MEMBERCODE

Source Section

SS7SLTRAFF

MGMTINHB

Indication of Link Management-Inhibit

Data Source

HLR_IOG20_APG40

Source Field

MGMTINHB

Source Section

SS7SLMT1

MGMTINHB_SS7HSLMT1

Indication of link management-inhibit status

Data Source

HLR_IOG20_APG40

Source Field

MGMTINHB

Source Section

SS7HSLMT1

MOCTRGTT_SS7HSLTRAF

Number of MTP3 message octets associated with MTP3 messages received that required GTT

Data Source

HLR_IOG20_APG40

Source Field

MOCTRGTT

Source Section

SS7HSLTRAF

MSGDISC0_SS7HSLMT1

Number of priority 0 MTP3 messages discarded due to signalling link congestion

Data Source

HLR_IOG20_APG40

Source Field

MSGDISC0

Source Section

SS7HSLMT1

MSGDISC1_SS7HSLMT1

Number of priority 1 MTP3 messages discarded due to signalling link congestion

Data Source

HLR_IOG20_APG40

Source Field

MSGDISC1

Source Section

SS7HSLMT1

MSGDISC2_SS7HSLMT1

Number of priority 2 MTP3 messages discarded due to signalling link congestion

Data Source

HLR_IOG20_APG40

Source Field

MSGDISC2

Source Section

SS7HSLMT1

MSGDISC3_SS7HSLMT1

Number of priority 3 MTP3 messages discarded due to signalling link congestion

Data Source

HLR_IOG20_APG40

Source Field

MSGDISC3

Source Section

SS7HSLMT1

MSGDISCH_SS7HSLMT1

Number of MTP3 messages discarded due to message length longer than 272 octets

Data Source

HLR_IOG20_APG40

Source Field

MSGDISCH

Source Section

SS7HSLMT1

MSGSRCVD_SS7HSLTRAF

Number of MTP3 messages received

Data Source

HLR_IOG20_APG40

Source Field

MSGSRCVD

Source Section

SS7HSLTRAF

MSGSRGTT_SS7HSLTRAF

Number of MTP3 messages received requiring Global Title Translation (GTT)

Data Source

HLR_IOG20_APG40

Source Field

MSGSRGTT

Source Section

SS7HSLTRAF

MSGSTRAN_SS7HSLTRAF

Number of MTP3 messages transmitted

Data Source

HLR_IOG20_APG40

Source Field

MSGSTRAN

Source Section

SS7HSLTRAF

MSUDISC0

Number of priority 0 MSUs discarded due to SL congestion

Data Source

HLR_IOG20_APG40

Source Field

MSUDISC0

Source Section

SS7SLMT1

MSUDISC1

Number of priority 1 MSUs discarded due to SL congestion

Data Source

HLR_IOG20_APG40

Source Field

MSUDISC1

Source Section

SS7SLMT1

MSUDISC2

Number of priority 2 MSUs discarded due to SL congestion

Data Source

HLR_IOG20_APG40

Source Field

MSUDISC2

Source Section

SS7SLMT1

MSUDISC3

Number of priority 3 MSUs discarded due to SL congestion

Data Source

HLR_IOG20_APG40

© Copyright IBM Corp. 2008, 2009. All Rights Reserved.

Source Field

MSUDISC3

Source Section

SS7SLMT1

MSURCERR

Number of MSUs received in error 10 Value of hourly link maintenance

Data Source

HLR_IOG20_APG40

Source Field

MSURCERR

Source Section

SS7SLTRAFF

MSURECD

Number of MSU's received 4 Number of SIF and SIO octets received

Data Source

HLR_IOG20_APG40

Source Field

MSURECD

Source Section

SS7SLTRAFF

MSURETRN

Number of MSUs retransmitted 8 Value of hourly link maintenance

Data Source

HLR_IOG20_APG40

Source Field

MSURETRN

Source Section

SS7SLTRAFF

MSUSRGTT

MSUs received requiring GTT

Data Source

HLR_IOG20_APG40

Source Field

MSUSRGTT

Source Section

SS7SLTRAFF

MSUTRAN

Number of MSU's transmitted, (retransmission not included)

Data Source

HLR_IOG20_APG40

Source Field

MSUTRAN

Source Section

SS7SLTRAFF

MTCEUSG

Link maintenance usage in 10 sec. Units

Data Source

HLR_IOG20_APG40

Source Field

MTCEUSG

Source Section

SS7SLMT1

© Copyright IBM Corp. 2008, 2009. All Rights Reserved.

MTCEUSG_SS7HSLMT1

Link maintenance usage in 10 second units

Data Source

HLR_IOG20_APG40

Source Field

MTCEUSG

Source Section

SS7HSLMT1

N10SCAN

Number of ten second scannings

Data Source

HLR_IOG20_APG40

Source Field

N10SCAN

Source Section

SS7SLMT1

N10SCAN_SS7HSLMT1

Number of 10 sec scans.

Data Source

HLR_IOG20_APG40

Source Field

N10SCAN

Source Section

SS7HSLMT1

NDCFLABN

Number of SL declared failures abnormal FIBR/BNSR

Data Source

HLR_IOG20_APG40

Source Field

NDCFLABN

Source Section

SS7SLMT2

NDCFLHWP

Number of SL declared failures due to hardware problems

Data Source

HLR_IOG20_APG40

Source Field

NDCFLHWP

Source Section

SS7SLMT2

NDCFLHWP_SS7HSLMT2

Number of signalling link declared failures due to hardware problems

Data Source

HLR_IOG20_APG40

Source Field

NDCFLHWP

Source Section

SS7HSLMT2

NDCFLXDA

Number of SL declared failures due to excessive delay of acknowledgement

Data Source

HLR_IOG20_APG40

© Copyright IBM Corp. 2008, 2009. All Rights Reserved.

Source Field

NDCFLXDA

Source Section

SS7SLMT2

NDCFLXDA_SS7HSLMT2

Number of signalling link declared failures due to excessive delay of acknowledgement

Data Source

HLR_IOG20_APG40

Source Field

NDCFLXDA

Source Section

SS7HSLMT2

NDCFLXDC

Number of SL declared failures due to due to excessive duration of congestion

Data Source

HLR_IOG20_APG40

Source Field

NDCFLXDC

Source Section

SS7SLMT2

NDCFLXDC_SS7HSLMT2

Number of signalling link declared failures due to excessive duration of congestion

Data Source

HLR_IOG20_APG40

Source Field

NDCFLXDC

Source Section

SS7HSLMT2

NDCFLXER

Number of SL declared failures due to excessive error rate

Data Source

HLR_IOG20_APG40

Source Field

NDCFLXER

Source Section

SS7SLMT2

NDCFLXER_SS7HSLMT2

Number of signalling link declared failures due to excessive error rate

Data Source

HLR_IOG20_APG40

Source Field

NDCFLXER

Source Section

SS7HSLMT2

NDISC_HLR

Number of MSUs discarded due to SL congestion.

Data Source

HLR_C7TMFILE

Source Field

NDISC

Source Section

ASC_CCITT7

© Copyright IBM Corp. 2008, 2009. All Rights Reserved.

NEARMGIH

Number of near-end management inhibits

Data Source

HLR_IOG20_APG40

Source Field

NEARMGIH

Source Section

SS7SLMT2

NEARMGIH_SS7HSLMT2

Number of near-end management inhibits

Data Source

HLR_IOG20_APG40

Source Field

NEARMGIH

Source Section

SS7HSLMT2

NEGACKS

Number of negative acknowledgments received

Data Source

HLR_IOG20_APG40

Source Field

NEGACKS

Source Section

SS7SLTRAFF

NLOSS_HLR

Number of congestion events resulting in loss of MSUs.

Data Source

HLR_C7TMFILE

Source Field

NLOSS

Source Section

ASC_CCITT7

NMDCLFLR

Number of SL declared failures,- All types

Data Source

HLR_IOG20_APG40

Source Field

NMDCLFLR

Source Section

SS7SLMT2

NMDCLFLR_SS7HSLMT2

Number of signalling link declared failures, all types

Data Source

HLR_IOG20_APG40

Source Field

NMDCLFLR

Source Section

SS7HSLMT2

NMSURE

Number of MSU's received

Data Source

HLR_IOG20_APG40

© Copyright IBM Corp. 2008, 2009. All Rights Reserved.

Source Field

NMSURE

Source Section

C7SL1

NMSURE_ASC_CCITT7_HLR

Number of MSUs received.

Data Source

HLR_C7TMFILE

Source Field

NMSURE

Source Section

ASC_CCITT7

NMSUTR

Number of MSU's transmitted

Data Source

HLR_IOG20_APG40

Source Field

NMSUTR

Source Section

C7SL1

NMSUTR_ASC_CCITT7_HLR

Number of MSUs transmitted.

Data Source

HLR_C7TMFILE

Source Field

NMSUTR

Source Section

ASC_CCITT7

NNAREC

Number of negative acknowledgements received

Data Source

HLR_IOG20_APG40

Source Field

NNAREC

Source Section

C7SL1

NOCTRE_HLR

Number of SIF and SIO octets received.

Data Source

HLR_C7TMFILE

Source Field

NOCTRE

Source Section

ASC_CCITT7

NOCTRTR_HLR

Number of octets retransmitted.

Data Source

HLR_C7TMFILE

Source Field

NOCTRTR

Source Section

ASC_CCITT7

© Copyright IBM Corp. 2008, 2009. All Rights Reserved.

NOCTTR_HLR

Number of SIF and SIO octets transmitted.

Data Source

HLR_C7TMFILE

Source Field

NOCTTR

Source Section

ASC_CCITT7

NORTRO

Number of octets retransmitted

Data Source

HLR_IOG20_APG40

Source Field

NORTRO

Source Section

C7SL1

NSIFSRE

Number of SIF and SIO octets received

Data Source

HLR_IOG20_APG40

Source Field

NSIFSRE

Source Section

C7SL1

NSIFTR

Number of SIF and SIO octets transmitted

Data Source

HLR_IOG20_APG40

Source Field

NSIFTR

Source Section

C7SL1

NSLALPRFL

Number of occurrences of SL Alignment or Proving failure.

Data Source

HLR_IOG20_APG40

Source Field

NSLALPRFL

Source Section

C7SL1

NSLCO_HLR

Number of SL congestion indications.

Data Source

HLR_C7TMFILE

Source Field

NSLCO

Source Section

ASC_CCITT7

NSLFA_HLR

Number of SL failures, all reasons.

Data Source

HLR_C7TMFILE

© Copyright IBM Corp. 2008, 2009. All Rights Reserved.

Source Field

NSLFA

Source Section

ASC_CCITT7

NSUERR

Number of signal units in error

Data Source

HLR_IOG20_APG40

Source Field

NSUERR

Source Section

C7SL1

OCDANMLS_SS7HSLMT3

Number of time of Out of Cell Delineation (OCD) anomalies

Data Source

HLR_IOG20_APG40

Source Field

OCDANMLS

Source Section

SS7HSLMT3

OCTRCGTT

MSU octets received for messages requiring GTT

Data Source

HLR_IOG20_APG40

Source Field

OCTRCGTT

Source Section

SS7SLTRAFF

OGUICELS_SS7HSLTRAF

Number of outgoing (transmitted) ATM user-information (UI) cells

Data Source

HLR_IOG20_APG40

Source Field

OGUICELS

Source Section

SS7HSLTRAF

OUTCELLS_SS7HSLTRAF

Number of outgoing (transmitted) NDC-valid ATM cells

Data Source

HLR_IOG20_APG40

Source Field

OUTCELLS

Source Section

SS7HSLTRAF

PDULSTER_SS7HSLMT3

Number of SSCOP PDUs with List Element Errors

Data Source

HLR_IOG20_APG40

Source Field

PDULSTER

Source Section

SS7HSLMT3

© Copyright IBM Corp. 2008, 2009. All Rights Reserved.

PDUOCTRC_SS7HSLTRAF

Number of octets associated with SSCOP SD PDUs received

Data Source

HLR_IOG20_APG40

Source Field

PDUOCTRC

Source Section

SS7HSLTRAF

PDUOCTTR_SS7HSLTRAF

Number of SSCOP SD PDUs received

Data Source

HLR_IOG20_APG40

Source Field

PDUOCTTR

Source Section

SS7HSLTRAF

PDUSRCVD_SS7HSLTRAF

Number of octets associated with SSCOP SD PDUs retransmitted

Data Source

HLR_IOG20_APG40

Source Field

PDUSRCVD

Source Section

SS7HSLTRAF

PDUSTRAN_SS7HSLTRAF

Number of octets associated with SSCOP SD PDUs transmitted, including retransmissions

Data Source

HLR_IOG20_APG40

Source Field

PDUSTRAN

Source Section

SS7HSLTRAF

PDUSUMER_SS7HSLMT3

A SSCOP Errored PDUs sum of errors counter. That is a sum of UNEXPDUS, INVLPDUS and PDULSTER

Data Source

HLR_IOG20_APG40

Source Field

PDUSUMER

Source Section

SS7HSLMT3

PERLEN

Period Length

PERLEN_C7TM

Period Length (of C7TMFILE data)

PROSTAT

Indication of processor outage status units being received

Data Source

HLR_IOG20_APG40

Source Field

PROSTAT

© Copyright IBM Corp. 2008, 2009. All Rights Reserved.

Source Section

SS7SLMT1

PROTRAN

Indication of processor outage status units being transmitted

Data Source

HLR_IOG20_APG40

Source Field

PROTRAN

Source Section

SS7SLMT2

RECVDOCT

Number of SIF and SIO octets received 5 Number of SIF and SIO octets transmitted

Data Source

HLR_IOG20_APG40

Source Field

RECVDOCT

Source Section

SS7SLTRAFF

RECVDOCT_SS7HSLTRAF

Number of SIF and SIO octets received

Data Source

HLR_IOG20_APG40

Source Field

RECVDOCT

Source Section

SS7HSLTRAF

REMINHDUR

Duration of SL inhibition due to remote management action in seconds

Data Source

HLR_IOG20_APG40

Source Field

REMINHDUR

Source Section

C7SL1

RETRNOCT

Number of SIF, SIO, LI, FSN, and BSN octets retransmitted

Data Source

HLR_IOG20_APG40

Source Field

RETRNOCT

Source Section

SS7SLTRAFF

rg_reap

ReportGenerator Internal Count

RINHNO

Number of occurrences of local management uninhibit

Data Source

HLR_IOG20_APG40

Source Field

RINHNO

Source Section

C7SL1

© Copyright IBM Corp. 2008, 2009. All Rights Reserved.

SAALINSV_SS7HSLMT3

Total time in seconds that the link is regarded in-service (at level 2) by SAAL

Data Source

HLR_IOG20_APG40

Source Field

SAALINSV

Source Section

SS7HSLMT3

SAMPCNT

Number of samples from signalling terminal

Data Source

HLR_IOG20_APG40

Source Field

SAMPCNT

Source Section

SS7SLMT1

SAMPCNT_SS7HSLMT1

Number of samples from signalling terminal

Data Source

HLR_IOG20_APG40

Source Field

SAMPCNT

Source Section

SS7HSLMT1

SCANSEC_ASC_CCITT7_HLR

Measurement duration in seconds.

Data Source

HLR_C7TMFILE

Source Field

SCANSEC

Source Section

ASC_CCITT7

SDOCTRCV_SS7HSLTRAF

Number of SSCOP Sequence Data (SD) PDUs transmitted, including retransmissions

Data Source

HLR_IOG20_APG40

Source Field

SDOCTRCV

Source Section

SS7HSLTRAF

SDOCTRTR_SS7HSLTRAF

Number of octets associated with SSCOP PDUs of all types transmitted

Data Source

HLR_IOG20_APG40

Source Field

SDOCTRTR

Source Section

SS7HSLTRAF

SDOCTTRN_SS7HSLTRAF

Number of SSCOP PDUs of all types received

Data Source

HLR_IOG20_APG40

© Copyright IBM Corp. 2008, 2009. All Rights Reserved.

Source Field

SDOCTTRN

Source Section

SS7HSLTRAF

SDPDURCV_SS7HSLTRAF

Number of octets associated with SSCOP PDUs of all types received

Data Source

HLR_IOG20_APG40

Source Field

SDPDURCV

Source Section

SS7HSLTRAF

SDPDURRR_SS7HSLTRAF

Number of SSCOP SD PDUs retransmitted

Data Source

HLR_IOG20_APG40

Source Field

SDPDURRR

Source Section

SS7HSLTRAF

SDPDURTR_SS7HSLTRAF

Number of SSCOP PDUs of all types transmitted

Data Source

HLR_IOG20_APG40

Source Field

SDPDURTR

Source Section

SS7HSLTRAF

SDPDUTRN_SS7HSLTRAF

Number of SSCOP SD PDU transmitted requiring retransmission because they were not acknowledged by the far-end's SSCOP peer

Data Source

HLR_IOG20_APG40

Source Field

SDPDUTRN

Source Section

SS7HSLTRAF

SL10SCAN

Number of 10 second scans in S7SL

Data Source

HLR_IOG20_APG40

Source Field

SL10SCAN

Source Section

SS7SLMT2

SL10SCAN_SS7HSLMT2

Number of 10 sec scans in S7SL

Data Source

HLR_IOG20_APG40

Source Field

SL10SCAN

© Copyright IBM Corp. 2008, 2009. All Rights Reserved.

Source Section

SS7HSLMT2

SLPARMGP

Parameter group number for signalling link

Data Source

HLR_IOG20_APG40

Source Field

SLPARMGP

Source Section

SS7SLMT2

SLPARMGP_SS7HSLMT2

Parameter group number for signalling link

Data Source

HLR_IOG20_APG40

Source Field

SLPARMGP

Source Section

SS7HSLMT2

SYS7IND

INDICATOR FOR C7 OR J7 MTP

Data Source

HLR_IOG20_APG40

Source Field

SYS7IND

Source Section

C7SL2

SYS7IND_C7SL1

Indicator

Data Source

HLR_IOG20_APG40

Source Field

SYS7IND

Source Section

C7SL1

TDCNGLV1

Total duration of level 1 congestion state in 10 sec. Units

Data Source

HLR_IOG20_APG40

Source Field

TDCNGLV1

Source Section

SS7SLMT1

TDCNGLV1_SS7HSLMT1

Total duration of level 1 congestion state in 10 sec units

Data Source

HLR_IOG20_APG40

Source Field

TDCNGLV1

Source Section

SS7HSLMT1

TDCNGLV2

Total duration of level 2 congestion state in 10 sec. Units

© Copyright IBM Corp. 2008, 2009. All Rights Reserved.

Data Source

HLR_IOG20_APG40

Source Field

TDCNGLV2

Source Section

SS7SLMT1

TDCNGLV2_SS7HSLMT1

Total duration of level 2 congestion state in 10 sec units

Data Source

HLR_IOG20_APG40

Source Field

TDCNGLV2

Source Section

SS7HSLMT1

TDCNGLV3

Total duration of level 3 congestion state in 10 sec. Units

Data Source

HLR_IOG20_APG40

Source Field

TDCNGLV3

Source Section

SS7SLMT1

TDCNGLV3_SS7HSLMT1

Total duration of level 3 congestion state in 10 sec units

Data Source

HLR_IOG20_APG40

Source Field

TDCNGLV3

Source Section

SS7HSLMT1

THRACHOV

Value of hourly link maintenance threshold for automatic changeovers

Data Source

HLR_IOG20_APG40

Source Field

THRACHOV

Source Section

SS7SLMT2

THRMSUER

Value of hourly link maintenance threshold for MSUs received in error

Data Source

HLR_IOG20_APG40

Source Field

THRMSUER

Source Section

SS7SLTRAFF

THRNEGAK

Value of hourly link maintenance threshold for negative acknowledgement received

Data Source

HLR_IOG20_APG40

Source Field

THRNEGAK

© Copyright IBM Corp. 2008, 2009. All Rights Reserved.

Source Section

SS7SLTRAFF

TLNKACTV

Signalling link active time in 10 sec. Units

Data Source

HLR_IOG20_APG40

Source Field

TLNKACTV

Source Section

SS7SLMT1

TLNKACTV_SS7HSLMT1

Signalling link active time in 10 second units

Data Source

HLR_IOG20_APG40

Source Field

TLNKACTV

Source Section

SS7HSLMT1

TOTOCMSG_SS7HSLMT1

Accumulated total of link transmission buffer occupancy in MTP3 messages

Data Source

HLR_IOG20_APG40

Source Field

TOTOCMSG

Source Section

SS7HSLMT1

TOTOCMSU

Accumulated total of link transmission buffer occupancy in MSUs

Data Source

HLR_IOG20_APG40

Source Field

TOTOCMSU

Source Section

SS7SLMT1

TOTOCOCT

Accumulated total of link transmission buffer occupancy in octets

Data Source

HLR_IOG20_APG40

Source Field

TOTOCOCT

Source Section

SS7SLMT1

TOTOCOCT_SS7HSLMT1

Accumulated total of link transmission buffer occupancy in octets

Data Source

HLR_IOG20_APG40

Source Field

TOTOCOCT

Source Section

SS7HSLMT1

TOTPRIO0

Accumulated total of link transmission buffer occupancy in priority 0 MSUs

© Copyright IBM Corp. 2008, 2009. All Rights Reserved.

Data Source

HLR_IOG20_APG40

Source Field

TOTPRIO0

Source Section

SS7SLMT1

TOTPRIO0_SS7HSLMT1

Accumulated total of link transmission buffer occupancy in priority 0 MTP3 messages

Data Source

HLR_IOG20_APG40

Source Field

TOTPRIO0

Source Section

SS7HSLMT1

TOTPRIO1

Accumulated total of link transmission buffer occupancy in priority 1 MSUs

Data Source

HLR_IOG20_APG40

Source Field

TOTPRIO1

Source Section

SS7SLMT1

TOTPRIO1_SS7HSLMT1

Accumulated total of link transmission buffer occupancy in priority 1 MTP3 messages

Data Source

HLR_IOG20_APG40

Source Field

TOTPRIO1

Source Section

SS7HSLMT1

TOTPRIO2

Accumulated total of link transmission buffer occupancy in priority 2 MSUs

Data Source

HLR_IOG20_APG40

Source Field

TOTPRIO2

Source Section

SS7SLMT1

TOTPRIO2_SS7HSLMT1

Accumulated total of link transmission buffer occupancy in priority 2 MTP3 messages

Data Source

HLR_IOG20_APG40

Source Field

TOTPRIO2

Source Section

SS7HSLMT1

TOTPRIO3

Accumulated total of link transmission buffer occupancy in priority 3 MSUs

Data Source

HLR_IOG20_APG40

Source Field

TOTPRIO3

© Copyright IBM Corp. 2008, 2009. All Rights Reserved.

Source Section

SS7SLMT1

TOTPRIO3_SS7HSLMT1

Accumulated total of link transmission buffer occupancy in priority 3 MTP3 messages

Data Source

HLR_IOG20_APG40

Source Field

TOTPRIO3

Source Section

SS7HSLMT1

TRANOCT

Number of SIF and SIO octets transmitted 6 Number of SIF, SIO, LI, and FSN

Data Source

HLR_IOG20_APG40

Source Field

TRANOCT

Source Section

SS7SLTRAFF

TRANOCT_SS7HSLTRAF

Number of SIF and SIO octets transmitted

Data Source

HLR_IOG20_APG40

Source Field

TRANOCT

Source Section

SS7HSLTRAF

UNAVAILDUR

Duration of SL unavailability (all reasons) in seconds

Data Source

HLR_IOG20_APG40

Source Field

UNAVAILDUR

Source Section

C7SL1

UNAVRBLDUR

Duration of SL unavailability due to remote processor outage in seconds

Data Source

HLR_IOG20_APG40

Source Field

UNAVRBLDUR

Source Section

C7SL1

UNAVSLFDUR

Duration of SL unavailability due to link failure in seconds

Data Source

HLR_IOG20_APG40

Source Field

UNAVSLFDUR

Source Section

C7SL1

UNEXPDUS_SS7HSLMT3

Number of unexpected SSCOP PDUs received

© Copyright IBM Corp. 2008, 2009. All Rights Reserved.

Data Source

HLR_IOG20_APG40

Source Field

UNEXPDUS

Source Section

SS7HSLMT3

HLR_SS7LinkSet Primitive Calculations

The following is a list of primitive calculations for the HLR_SS7LinkSet entity.

GRAPHmultiLineSeparator

Special Control Field for Multi-Line Graphs

Calculation

```
""
```

INTERVALS

Number of 60 minute intervals covered

Calculation

```
PERLEN / (1.0 * 60)
```

LocalName

HLR_C7LinkSet Name

Calculation

```
LocalKey
```

NUMDAYS

of days in Report

Calculation

```
DAYSINREPORT()
```

NUMHOURS

of hours in Summation Data

Calculation

VENDORTECH

Vendor Technology

Calculation

```
isNull( PERLEN ) ? nullString() : "EricssonGSM"
```

HLR_SS7LinkSet Peg Counts

The following is a list of peg counts for the HLR_SS7LinkSet entity.

ASPADUR_HLR

Duration of adjacent SP inaccessible in seconds

Data Source

HLR_IOG20_APG40

Source Field

ASPADUR

Source Section

C7ADJSLP

ASPINA_HLR

Number of occurrences of adjacent SP inaccessible

Data Source

HLR_IOG20_APG40

Source Field

ASPINA

Source Section

C7ADJSLP

AVLINKS

Number of currently available links (ACT)

© Copyright IBM Corp. 2008, 2009. All Rights Reserved.

Data Source

HLR_IOG20_APG40

Source Field

AVLINKS

Source Section

SS7LS

AVLINKS_SS7HSLS

Number of currently available links (ACT)

Data Source

HLR_IOG20_APG40

Source Field

AVLINKS

Source Section

SS7HSLS

CLUSTERCODE_HLR_SS7LS

SS7 Link Cluster code

Data Source

HLR_IOG20_APG40

Source Field

CLUSTERCODE

Source Section

SS7LS

HLR_RELEASE

Release

ICUICELS_SS7HSLS

Total number of incoming (received) ATM user information (UI) cells

Data Source

HLR_IOG20_APG40

Source Field

ICUICELS

Source Section

SS7HSLS

INCCELLS_SS7HSLS

Total number of incoming (received) NDC-valid ATM cells

Data Source

HLR_IOG20_APG40

Source Field

INCCELLS

Source Section

SS7HSLS

LINKS

Number of assigned SLs

Data Source

HLR_IOG20_APG40

Source Field

LINKS

Source Section

SS7LS

LINKS_SS7HSLS

Number of assigned signalling links

Data Source

HLR_IOG20_APG40

© Copyright IBM Corp. 2008, 2009. All Rights Reserved.

Source Field

LINKS

Source Section

SS7HSLS

LSMTCST

Maintenance state (same as 'link set service status')

Data Source

HLR_IOG20_APG40

Source Field

LSMTCST

Source Section

SS7LS

LSMTCST_SS7HSLS

Maintenance state (same as 'link set service status')

Data Source

HLR_IOG20_APG40

Source Field

LSMTCST

Source Section

SS7HSLS

MEMBERCODE_HLR_SS7LS

SS7 Cluster Member Code

Data Source

HLR_IOG20_APG40

Source Field

MEMBERCODE

Source Section

SS7LS

MSGSRCVD_SS7HSLS

Number of MTP3 messages received

Data Source

HLR_IOG20_APG40

Source Field

MSGSRCVD

Source Section

SS7HSLS

MSGSTRAN_SS7HSLS

Number of MTP3 messages transmitted, including those for which retransmissions of SSCOP SD PDUs

Data Source

HLR_IOG20_APG40

Source Field

MSGSTRAN

Source Section

SS7HSLS

MSURECD

Number of MSU's received

Data Source

HLR_IOG20_APG40

Source Field

MSURECD

© Copyright IBM Corp. 2008, 2009. All Rights Reserved.

Source Section

SS7LS

MSURETRN

Number of MSU's retransmitted

Data Source

HLR_IOG20_APG40

Source Field

MSURETRN

Source Section

SS7LS

MSUTRAN

Number of MSU's transmitted, (retransmission not included)

Data Source

HLR_IOG20_APG40

Source Field

MSUTRAN

Source Section

SS7LS

N10SCAN

Number of 10 sec. Scans

Data Source

HLR_IOG20_APG40

Source Field

N10SCAN

Source Section

SS7LS

N10SCAN_SS7HSLS

Number of 10 sec scans

Data Source

HLR_IOG20_APG40

Source Field

N10SCAN

Source Section

SS7HSLS

OGUICELS_SS7HSLS

Total number of outgoing (transmitted) ATM user information (UI) cells

Data Source

HLR_IOG20_APG40

Source Field

OGUICELS

Source Section

SS7HSLS

OOSLINKS

Number of links in the Out-of-Service (OSS) Maintenance State

Data Source

HLR_IOG20_APG40

Source Field

OOSLINKS

Source Section

SS7LS

OOSLINKS_SS7HSLS

Number of links in the out-of-service (OOS) maintenance state

© Copyright IBM Corp. 2008, 2009. All Rights Reserved.

Data Source

HLR_IOG20_APG40

Source Field

OOSLINKS

Source Section

SS7HSLS

OUTCELLS_SS7HSLS

Total number of outgoing (transmitted) NDC-valid ATM cells

Data Source

HLR_IOG20_APG40

Source Field

OUTCELLS

Source Section

SS7HSLS

PDUOCTRC_SS7HSLS

Total number of SSCOP PDU octets received

Data Source

HLR_IOG20_APG40

Source Field

PDUOCTRC

Source Section

SS7HSLS

PDUOCTTR_SS7HSLS

Total number of SSCOP PDU octets transmitted

Data Source

HLR_IOG20_APG40

Source Field

PDUOCTTR

Source Section

SS7HSLS

PDUSRCVD_SS7HSLS

Total number of SSCOP PDUs received

Data Source

HLR_IOG20_APG40

Source Field

PDUSRCVD

Source Section

SS7HSLS

PDUSTRAN_SS7HSLS

Total number of SSCOP PDUs transmitted

Data Source

HLR_IOG20_APG40

Source Field

PDUSTRAN

Source Section

SS7HSLS

PERLEN

Period Length

RECVDOCT

Number of SIF and SIO octets received

Data Source

HLR_IOG20_APG40

© Copyright IBM Corp. 2008, 2009. All Rights Reserved.

Source Field

RECVDOCT

Source Section

SS7LS

RECVDOCT_SS7HSLS

Number of SIF and SIO octets for MTP3 messages received

Data Source

HLR_IOG20_APG40

Source Field

RECVDOCT

Source Section

SS7HSLS

RETRNOCT

Number of SIF, SIO, LI, FSN, and BSN octets retransmitted

Data Source

HLR_IOG20_APG40

Source Field

RETRNOCT

Source Section

SS7LS

rg_reap

ReportGenerator Internal Count

SDOCTRCV_SS7HSLS

Number of SSCOP SD PDU octets received

Data Source

HLR_IOG20_APG40

Source Field

SDOCTRCV

Source Section

SS7HSLS

SDOCTRTR_SS7HSLS

Number of SSCOP SD PDU octets retransmitted

Data Source

HLR_IOG20_APG40

Source Field

SDOCTRTR

Source Section

SS7HSLS

SDOCTTRN_SS7HSLS

Number of SSCOP SD PDU octets transmitted, including retransmissions

Data Source

HLR_IOG20_APG40

Source Field

SDOCTTRN

Source Section

SS7HSLS

SDPDURCV_SS7HSLS

Number of SSCOP SD PDUs received

Data Source

HLR_IOG20_APG40

Source Field

SDPDURCV

© Copyright IBM Corp. 2008, 2009. All Rights Reserved.

Source Section

SS7HSLS

SDPDURTR_SS7HSLS

Number of SSCOP SD PDUs retransmitted

Data Source

HLR_IOG20_APG40

Source Field

SDPDURTR

Source Section

SS7HSLS

SDPDUTRN_SS7HSLS

Number of SSCOP SD PDUs transmitted, including retransmissions

Data Source

HLR_IOG20_APG40

Source Field

SDPDUTRN

Source Section

SS7HSLS

STUNADURAT_HLR

Duration of unavailability of signalling linkset in seconds

Data Source

HLR_IOG20_APG40

Source Field

STUNADURAT

Source Section

C7SLSET

SYS7IND_HLR_C7ADJSLP

Linkset state

Data Source

HLR_IOG20_APG40

Source Field

SYS7IND

Source Section

C7ADJSLP

SYS7IND_HLR_C7SLSET

Linkset state

Data Source

HLR_IOG20_APG40

Source Field

SYS7IND

Source Section

C7SLSET

TDLSINAC

Total duration of LS inactivity due to no links in LS are active in 10 sec. Units

Data Source

HLR_IOG20_APG40

Source Field

TDLSINAC

Source Section

SS7LS

TDLSINAC_SS7HSLS

Total duration of LS inactivity due to no links in LS are active in 10 sec units

© Copyright IBM Corp. 2008, 2009. All Rights Reserved.

Data Source

HLR_IOG20_APG40

Source Field

TDLSINAC

Source Section

SS7HSLS

TRANOCT

Number of SIF and SIO octets transmitted

Data Source

HLR_IOG20_APG40

Source Field

TRANOCT

Source Section

SS7LS

TRANOCT_SS7HSLS

Number of SIF and SIO octets for MTP3 messages transmitted

Data Source

HLR_IOG20_APG40

Source Field

TRANOCT

Source Section

SS7HSLS

UAVLINKS

Number of links in the Unavailable (UNAV) Maintenance State

Data Source

HLR_IOG20_APG40

Source Field

UAVLINKS

Source Section

SS7LS

UAVLINKS_SS7HSLS

Number of links in the unavailable (UNAV) maintenance state

Data Source

HLR_IOG20_APG40

Source Field

UAVLINKS

Source Section

SS7HSLS

HLR_SS7RouteSet Primitive Calculations

The following is a list of primitive calculations for the HLR_SS7RouteSet entity.

GRAPHmultiLineSeparator

Special Control Field for Multi-Line Graphs

Calculation

```
""
```

INTERVALS

Number of 60 minute intervals covered

Calculation

```
PERLEN / (1.0 * 60)
```

LocalName

HLR_C7RouteSet Name

Calculation

```
LocalKey
```

© Copyright IBM Corp. 2008, 2009. All Rights Reserved.

NUMDAYS

of days in Report

Calculation

```
DAYSINREPORT()
```

NUMHOURS

of hours in Summation Data

Calculation

VENDORTECH

Vendor Technology

Calculation

```
isNull( PERLEN ) ? nullString() : "EricssonGSM"
```

HLR_SS7RouteSet Peg Counts

The following is a list of peg counts for the HLR_SS7RouteSet entity.

HLR_RELEASE

Release

PERLEN

Period Length

rg_reap

ReportGenerator Internal Count

STINACNT_HLR

Number of occurrences of unavailability of route set to a given destination

Data Source

HLR_IOG20_APG40

Source Field

STINACNT

Updated: 2009-07-22

Source Section

C7RTSET

STINADURAT_HLR

Duration of unavailability of route set in seconds

Data Source

HLR_IOG20_APG40

Source Field

STINADURAT

Source Section

C7RTSET

SYS7IND_HLR_C7RTSET

Linkset state

Data Source

HLR_IOG20_APG40

Source Field

SYS7IND

Source Section

C7RTSET

HLR_VLR Primitive Calculations

The following is a list of primitive calculations for the HLR_VLR entity.

GRAPHmultiLineSeparator

Special Control Field for Multi-Line Graphs

Calculation

""

INTERVALS

Number of 60 minute intervals covered

© Copyright IBM Corp. 2008, 2009. All Rights Reserved.

Calculation

```
PERLEN / (1.0 * 60)
```

NUMDAYS

of days in Report

Calculation

```
DAYSINREPORT()
```

NUMHOURS

of hours in Summation Data

Calculation

VENDORTECH

Vendor Technology

Calculation

```
isNull( PERLEN ) ? nullString() : "EricssonGSM"
```

HLR_VLR Peg Counts

The following is a list of peg counts for the HLR_VLR entity.

HLR_RELEASE

Release

NACTIVSS

Number of activate-SS operations received

Data Source

HLR_IOG20_APG40

Source Field

NACTIVSS

Source Section

VLR

NACTTRAC

Number of ATM operations sent

Data Source

HLR_IOG20_APG40

Source Field

NACTTRAC

Source Section

VLR

NBEGACT

Number of begin subscriber activity received

Data Source

HLR_IOG20_APG40

Source Field

NBEGACT

Source Section

VLR

NCANCEL

Number of cancel location operations sent

Data Source

HLR_IOG20_APG40

Source Field

NCANCEL

Source Section

VLR

NDEACTRA

Number of DTM operations sent

© Copyright IBM Corp. 2008, 2009. All Rights Reserved.

Data Source

HLR_IOG20_APG40

Source Field

NDEACTRA

Source Section

VLR

NDEACTSS

Number of deactivate-SS operations received

Data Source

HLR_IOG20_APG40

Source Field

NDEACTSS

Source Section

VLR

NDELETE

Number of delete subscriber data operations sent

Data Source

HLR_IOG20_APG40

Source Field

NDELETE

Source Section

VLR

NERASESS

Number of erase-SS operations received

Data Source

HLR_IOG20_APG40

Source Field

NERASESS

Source Section

VLR

NINSERT

Number of insert subscriber data operations sent

Data Source

HLR_IOG20_APG40

Source Field

NINSERT

Source Section

VLR

NINTRRSS

Number of interrogate-SS operations received

Data Source

HLR_IOG20_APG40

Source Field

NINTRRSS

Source Section

VLR

NPROROA

Number of provide roaming number operations sent

Data Source

HLR_IOG20_APG40

Source Field

NPROROA

© Copyright IBM Corp. 2008, 2009. All Rights Reserved.

Source Section

VLR

NPRSINFO

Number of ProvideSubscriberInfo operations sent

Data Source

HLR_IOG20_APG40

Source Field

NPRSINFO

Source Section

VLR

NPURGEMS

Number of purge operations received

Data Source

HLR_IOG20_APG40

Source Field

NPURGEMS

Source Section

VLR

NPUSSDAR

Number of ProcessUnstructuredSS-Data operations received

Data Source

HLR_IOG20_APG40

Source Field

NPUSSDAR

Source Section

VLR

NPUSSRQR

Number of ProcessUnstructuredSS-Request operations received

Data Source

HLR_IOG20_APG40

Source Field

NPUSSRQR

Source Section

VLR

NREGPASS

Number of register passwords received

Data Source

HLR_IOG20_APG40

Source Field

NREGPASS

Source Section

VLR

NREGTRSS

Number of register-SS operations received

Data Source

HLR_IOG20_APG40

Source Field

NREGTRSS

Source Section

VLR

NUPDLOC

Number of update location operations received

© Copyright IBM Corp. 2008, 2009. All Rights Reserved.

Data Source

HLR_IOG20_APG40

Source Field

NUPDLOC

Source Section

VLR

NUSSDNTS

Number of UnstructuredSS-Notify operations sent

Data Source

HLR_IOG20_APG40

Source Field

NUSSDNTS

Source Section

VLR

NUSSDRQS

Number of UnstructuredSS-Request operations sent

Data Source

HLR_IOG20_APG40

Source Field

NUSSDRQS

Source Section

VLR

PERLEN

Period Length

rg_reap

ReportGenerator Internal Count

INAP Primitive Calculations

The following is a list of primitive calculations for the INAP entity.

GRAPHmultiLineSeparator

Special Control Field for Multi-Line Graphs

Calculation

```
""
```

NUMDAYS

of days in Report

Calculation

```
DAYSINREPORT()
```

NUMHOURS

of hours in Summation Data

INAP Peg Counts

The following is a list of peg counts for the INAP entity.

HLR_RELEASE

Release

NINAPFLT

Unsuccessful operations due to problems reported by the local TCAP

NINAPSUCC

Successful operations executed

NINAPTOT

Total requests of INAP operations

PERLEN

Period Length

© Copyright IBM Corp. 2008, 2009. All Rights Reserved.

Map Primitive Calculations

The following is a list of primitive calculations for the Map entity.

GRAPHmultiLineSeparator

Special Control Field for Multi-Line Graphs

Calculation

```
""
```

INTERVALS

Number of 60 minute intervals covered

Calculation

```
PERLEN / (1.0 * 60)
```

LocalName

Map Name

Calculation

```
LocalKey
```

NUMDAYS

of days in Report

Calculation

```
DAYSINREPORT()
```

NUMHOURS

of hours in Summation Data

Calculation

VENDORTECH

Vendor Technology

Calculation

```
isNull( PERLEN ) ? nullString() : "EricssonGSM"
```

Map Peg Counts

The following is a list of peg counts for the Map entity.

HLR_RELEASE

Release

NMAPFLT

Number of unsuccessful MAP operations for the MAP operation Alert Service Centre

Data Source

HLR_IOG20_APG40

Source Field

NMAPFLT

Source Section

HLRMAP

NMAPSUCC

Number of successful MAP operations for the MAP operation Alert Service Centre

Data Source

HLR_IOG20_APG40

Source Field

NMAPSUCC

Source Section

HLRMAP

NMAPTOT

Total number of requests of MAP operations for the MAP operation Alert Service Centre

Data Source

HLR_IOG20_APG40

Source Field

NMAPTOT

© Copyright IBM Corp. 2008, 2009. All Rights Reserved.

Source Section

HLRMAP

PERLEN

Period Length

rg_reap

ReportGenerator Internal Count

PLMN Primitive Calculations

The following is a list of primitive calculations for the PLMN entity.

GRAPHmultiLineSeparator

Special Control Field for Multi-Line Graphs

Calculation

```
""
```

INTERVALS

Number of 60 minute intervals covered

Calculation

```
PERLEN / (1.0 * 60)
```

LocalName

PLMN Name

Calculation

```
LocalKey
```

NUMDAYS

of days in Report

Calculation

```
DAYSINREPORT()
```

NUMHOURS

of hours in Summation Data

Calculation

VENDORTECH

Vendor Technology

Calculation

```
isNull( PERLEN ) ? nullString() : "EricssonGSM"
```

PLMN Peg Counts

The following is a list of peg counts for the PLMN entity.

GPPERPLMNCNT

Number of General Packet Radio Service (GPRS) subscribers located per PLMN

Data Source

HLR_IOG20_APG40

Source Field

GPPERPLMNCNT

Source Section

PLMNSUB

HLR_RELEASE

Release

PERLEN

Period Length

PERPLMNCNT

Number of non-GPRS subscribers located per PLMN

Data Source

HLR_IOG20_APG40

Source Field

PERPLMNCNT

© Copyright IBM Corp. 2008, 2009. All Rights Reserved.

Source Section

PLMNSUB

rg_reap

ReportGenerator Internal Count

SERVICEFEATURE_HLR Primitive Calculations

The following is a list of primitive calculations for the SERVICEFEATURE_HLR entity.

GRAPHmultiLineSeparator

Special Control Field for Multi-Line Graphs

Calculation

```
""
```

INTERVALS

Number of 60 minute intervals covered

Calculation

```
PERLEN / (1.0 * 60)
```

LocalName

SERVICEFEATURE_HLR Name

Calculation

```
LocalKey
```

NUMDAYS

of days in Report

Calculation

```
DAYSINREPORT()
```

NUMHOURS

of hours in Summation Data

Calculation

VENDORTECH

Vendor Technology

Calculation

```
isNull( PERLEN ) ? nullString() : "EricssonGSM"
```

SERVICEFEATURE_HLR Peg Counts

The following is a list of peg counts for the SERVICEFEATURE_HLR entity.

NSERVFEAT

Subscribers having a feature Active

Data Source

HLR_IOG20_APG40

Source Field

NSERVFEAT

Source Section

SERVFEAT

NSERVFEATINV

Number of successful feature invocations

Data Source

HLR_IOG20_APG40

Source Field

NSERVFEATINV

Source Section

SERVFEAT

PERLEN

Period Length

rg_reap

ReportGenerator Internal Count

© Copyright IBM Corp. 2008, 2009. All Rights Reserved.

SERVICEFEATURE_HLR_RELEASE

Release

SGSN_Map Primitive Calculations

The following is a list of primitive calculations for the SGSN_Map entity.

GRAPHmultiLineSeparator

Special Control Field for Multi-Line Graphs

Calculation

```
""
```

INTERVALS

Number of 60 minute intervals covered

Calculation

```
PERLEN / (1.0 * 60)
```

NUMDAYS

of days in Report

Calculation

```
DAYSINREPORT()
```

NUMHOURS

of hours in Summation Data

Calculation

VENDORTECH

Vendor Technology

Calculation

```
isNull( PERLEN ) ? nullString() : "EricssonGSM"
```

SGSN_Map Peg Counts

The following is a list of peg counts for the SGSN_Map entity.

HLR_RELEASE

Release

NCANGLOC

Number of cancel GPRS location operations sent

Data Source

HLR_IOG20_APG40

Source Field

NCANGLOC

Source Section

SGSN

NDSDGPRS

Number of delete subscriber data operations sent

Data Source

HLR_IOG20_APG40

Source Field

NDSDGPRS

Source Section

SGSN

NISDGPRS

Number of insert subscriber data operations sent

Data Source

HLR_IOG20_APG40

Source Field

NISDGPRS

Source Section

SGSN

© Copyright IBM Corp. 2008, 2009. All Rights Reserved.

NPURGEGP

Number of purge ms operations received

Data Source

HLR_IOG20_APG40

Source Field

NPURGEGP

Source Section

SGSN

NUPGPLOC

Number of update GPRS location operations received

Data Source

HLR_IOG20_APG40

Source Field

NUPGPLOC

Source Section

SGSN

PERLEN

Period Length

rg_reap

ReportGenerator Internal Count

SubServices Primitive Calculations

The following is a list of primitive calculations for the SubServices entity.

GRAPHmultiLineSeparator

Special Control Field for Multi-Line Graphs

Calculation

""

Updated: 2009-07-22

INTERVALS

Number of 60 minute intervals covered

Calculation

```
PERLEN / (1.0 * 60)
```

NUMDAYS

of days in Report

Calculation

```
DAYSINREPORT()
```

NUMHOURS

of hours in Summation Data

Calculation

VENDORTECH

Vendor Technology

Calculation

```
isNull( PERLEN ) ? nullString() : "EricssonGSM"
```

SubServices Peg Counts

The following is a list of peg counts for the SubServices entity.

HLR_RELEASE

Release

NACCESS

Number of subscribers with access

Data Source

HLR_IOG20_APG40

Source Field

NACCESS

© Copyright IBM Corp. 2008, 2009. All Rights Reserved.

Source Section

SERVICES

NACT

Number of activations

Data Source

HLR_IOG20_APG40

Source Field

NACT

Source Section

SERVICES

NACTIVE

Number of subscribers activated

Data Source

HLR_IOG20_APG40

Source Field

NACTIVE

Source Section

SERVICES

NDEACT

Number of deactivations

Data Source

HLR_IOG20_APG40

Source Field

NDEACT

Source Section

SERVICES

NSUCCACT

Number of successful activations

Data Source

HLR_IOG20_APG40

Source Field

NSUCCACT

Source Section

SERVICES

NSUCCUSE

Number of successful utilizations

Data Source

HLR_IOG20_APG40

Source Field

NSUCCUSE

Source Section

SERVICES

NUSE

Number of utilizations

Data Source

HLR_IOG20_APG40

Source Field

NUSE

Source Section

SERVICES

PERLEN

Period Length

© Copyright IBM Corp. 2008, 2009. All Rights Reserved.

rg_reap

ReportGenerator Internal Count

SUPPSERVICE_HLR Primitive Calculations

The following is a list of primitive calculations for the SUPPSERVICE_HLR entity.

GRAPHmultiLineSeparator

Special Control Field for Multi-Line Graphs

Calculation

```
""
```

INTERVALS

Number of 60 minute intervals covered

Calculation

```
PERLEN / (1.0 * 60)
```

LocalName

SUPPSERVICE_HLR Name

Calculation

```
LocalKey
```

NUMDAYS

of days in Report

Calculation

```
DAYSINREPORT()
```

NUMHOURS

of hours in Summation Data

Calculation

VENDORTECH

Vendor Technology

Calculation

```
isNull( PERLEN ) ? nullString() : "EricssonGSM"
```

SUPPSERVICE_HLR Peg Counts

The following is a list of peg counts for the SUPPSERVICE_HLR entity.

NALLBSG

Subscribers having an SS Active that is applicable to all BSGs.

Data Source

HLR_IOG20_APG40

Source Field

NALLBSG

Source Section

SSACT

NASYNCR

Subscribers having an SS Active for BSG 'All Data Circuit Asynchronous'.

Data Source

HLR_IOG20_APG40

Source Field

NASYNCR

Source Section

SSACT

NAUXSPEE

Subscribers having an SS Active for BSG 'Auxiliary Speech'.

Data Source

HLR_IOG20_APG40

Source Field

NAUXSPEE

© Copyright IBM Corp. 2008, 2009. All Rights Reserved.

Source Section

SSACT

NFACSIM

Subscribers having an SS Active for BSG 'Facsimile'

Data Source

HLR_IOG20_APG40

Source Field

NFACSIM

Source Section

SSACT

NSMS

Subscribers having an SS Active for BSG 'Short Message Service'

Data Source

HLR_IOG20_APG40

Source Field

NSMS

Source Section

SSACT

NSPEECH

Subscribers having an SS Active for BSG 'Speech'.

Data Source

HLR_IOG20_APG40

Source Field

NSPEECH

Source Section

SSACT

NSUCACTEX

Successful activation originated from external node

Data Source

HLR_IOG20_APG40

Source Field

NSUCACTEX

Source Section

SSSPROC

NSUCCACT

Successful activation executed

Data Source

HLR_IOG20_APG40

Source Field

NSUCCACT

Source Section

SSSPROC

NSUCCERA

Successful erasure executed

Data Source

HLR_IOG20_APG40

Source Field

NSUCCERA

Source Section

SSSPROC

NSUCCINT

Successful interrogation executed

© Copyright IBM Corp. 2008, 2009. All Rights Reserved.

Data Source

HLR_IOG20_APG40

Source Field

NSUCCINT

Source Section

SSSPROC

NSUCCINV

Successful invocation executed

Data Source

HLR_IOG20_APG40

Source Field

NSUCCINV

Source Section

SSSPROC

NSUCCREG

Successful registration executed

Data Source

HLR_IOG20_APG40

Source Field

NSUCCREG

Source Section

SSSPROC

NSUCDEACT

Successful deactivation executed

Data Source

HLR_IOG20_APG40

Source Field

NSUCDEACT

Source Section

SSSPROC

NSUCDEACTEX

Successful deactivation originated from external node

Data Source

HLR_IOG20_APG40

Source Field

NSUCDEACTEX

Source Section

SSSPROC

NSUCERAEX

Successful erasure originated from external node

Data Source

HLR_IOG20_APG40

Source Field

NSUCERAEX

Source Section

SSSPROC

NSUCINTEX

Successful interrogation originated from external node

Data Source

HLR_IOG20_APG40

Source Field

NSUCINTEX

© Copyright IBM Corp. 2008, 2009. All Rights Reserved.

Source Section

SSSPROC

NSUCREGEX

Successful registrations originated from external node

Data Source

HLR_IOG20_APG40

Source Field

NSUCREGEX

Source Section

SSSPROC

NSYNCRO

Subscribers having an SS Active for BSG 'All Data Circuit Synchronous'

Data Source

HLR_IOG20_APG40

Source Field

NSYNCRO

Source Section

SSACT

PERLEN

Period Length

rg_reap

ReportGenerator Internal Count

SUPPSERVICE_HLR_RELEASE

Release

System Primitive Calculations

The following is a list of primitive calculations for the System entity.

GRAPHmultiLineSeparator

Special Control Field for Multi-Line Graphs

Calculation

```
""
```

NUMDAYS

of days in Report

Calculation

```
DAYSINREPORT()
```

NUMHOURS

of hours in Summation Data

Calculation

PercentActiveSubscribers

Percent Active Subscribers

Calculation

```
sum(MSC.HLRSubs[subString(LocalKey, 1, 6) = "420608"], NHLRREGAST) * 100.0
/ sum(HLR, NSUBSCNT)
```

PercentRegisteredSubscribers

Percent Registered Subscribers

Calculation

```
sum(MSC.HLRSubs[subString(LocalKey, 1, 6) = "420608"],NHLRMSST ) * 100.0 /
sum(HLR, NSUBSCNT)
```

pTotalGGSNPacketSuccessRate

Total GGSN Packet Success Rate is the Total Average Success Factor of the overall Packets sent to and Received from ALL GGSNs

Calculation

```
aggr( GSNType.GSN, pGGSNPacketSuccessRate )
```

© Copyright IBM Corp. 2008, 2009. All Rights Reserved.

pTotalSessionManSuccessRateGGSN

Total Session Management Success Rate

Calculation

```
aggr( GSNType.GSN, pSessionManSuccessRateGGSN )
```

RegisteredInroamers

Registered Inroamers

Calculation

```
sum(MSC.HLRSubs[subString(LocalKey, 1, 6) != "420608"], NHLRMSST)
```

RegisteredOutroamer

Registered Outroamers

Calculation

```
sum(HLR.PLMN[subString(LocalKey, 1, 6) != "420608"], vsum( GPPERPLMNCNT,
PERPLMNCNT ))
```

SubscribersHLR

Subscribers in HLR

Calculation

```
AGGR(HLR, NSUBSCNT)
```

SubscribersVLR

Subscribers in VLR

Calculation

```
sum(MSC.HLRSubs[subString(LocalKey, 1, 6) = "420608"], NHLRMSST)
```

TotalCellTCHTraffic

Average TCH/F Traffic Level

Calculation

```
protect(sum(MSC.BSC.BTSSite.Cell, TCF_TRAFF_VOL))
```

TotalSwitchedTraffic

Generates a predefined graph showing total switch traffic in the network and total air traffic

Calculation

```
sum(MSC, TotalSwitchedTraffic)
```

System Peg Counts

The following is a list of peg counts for the System entity.

rg_reap

ReportGenerator Internal Count

© Copyright IBM Corp. 2008, 2009. All Rights Reserved.

11 MSC Traffic Entities

The following figures show the Prospect reporting hierarchy for MSC traffic entities.

Figure 6: Reporting Hierarchy

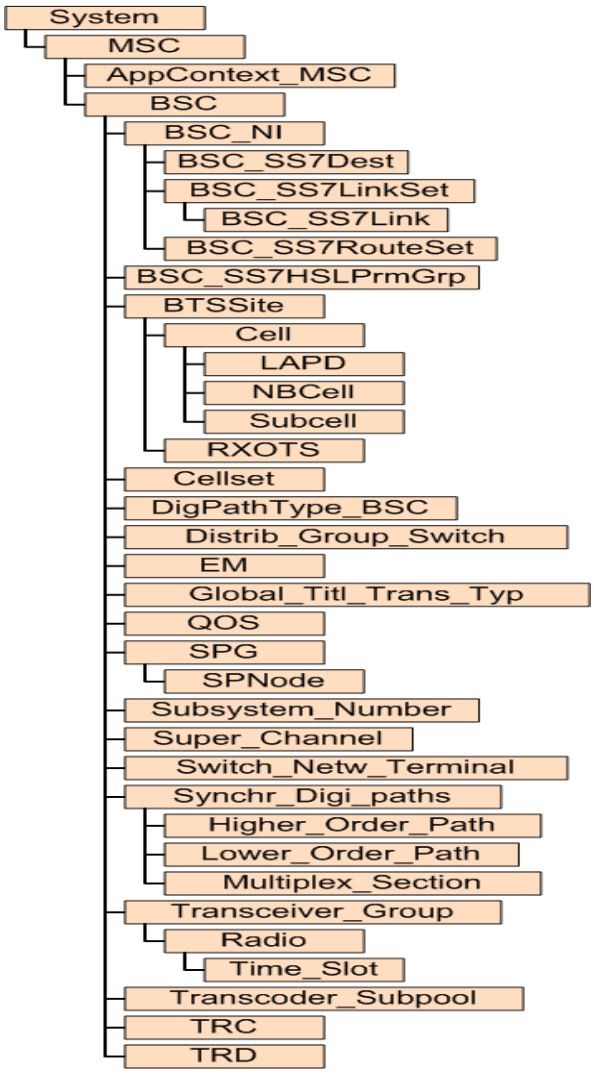

Updated: 2009-07-22

Figure 7: Reporting Hierarchy

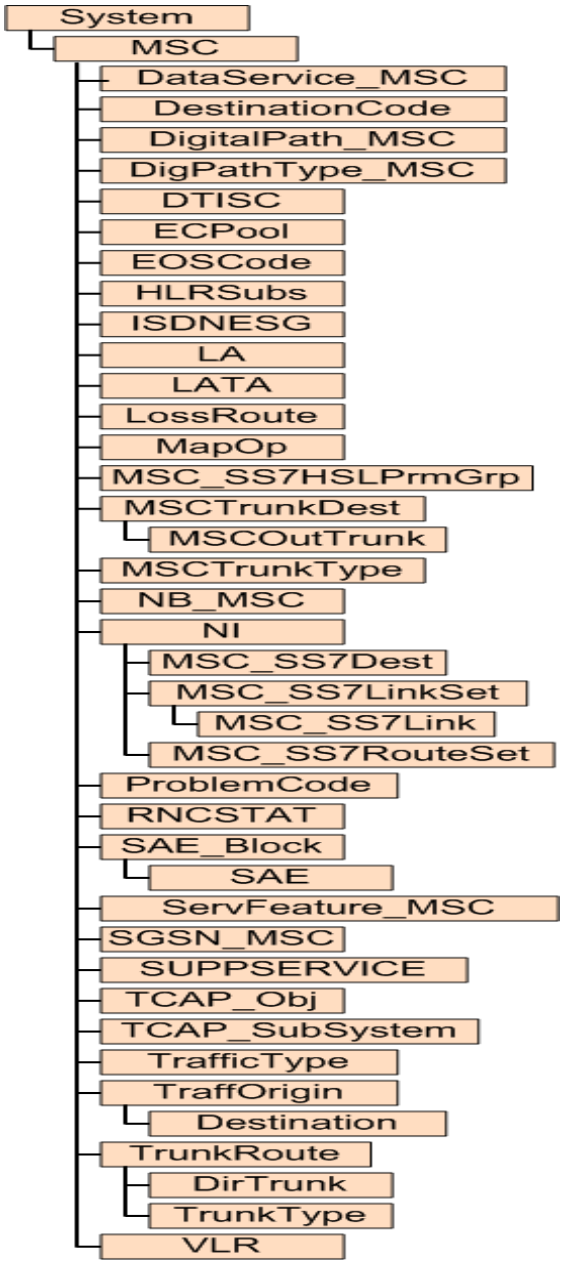

© Copyright IBM Corp. 2008, 2009. All Rights Reserved.

12 MSC Traffic Fields

The following is a list of available MSC Traffic performance data fields.

AppContext_MSC Primitive Calculations

The following is a list of primitive calculations for the AppContext_MSC entity.

GRAPHmultiLineSeparator

Special Control Field for Multi-Line Graphs

Calculation

```
""
```

NUMDAYS

of days in Report

Calculation

```
DAYSINREPORT()
```

NUMHOURS

of hours in Summation Data

Calculation

AppContext_MSC Peg Counts

The following is a list of peg counts for the AppContext_MSC entity.

NFB3TO1TOT

Number of fall backs for an application context MAP V3 to MAP V2

NFB3TO2TOT

Number of fall backs for an application context MAP V3 to MAP V2

NFBACTOT

Number of fall-backs for a specific AC

BSC Primitive Calculations

The following is a list of primitive calculations for the BSC entity.

Alloc_Fail

Preemption, No of failed PDCH allocations due to no PCU resources

Calculation

```
ALLPDCHPCUFAIL
```

CP_LOAD%

CP load on average

Calculation

```
ACCLOAD / (1.0 * NSCAN)
```

GRAPHmultiLineSeparator

Special Control Field for Multi-Line Graphs

Calculation

```
""
```

INTERVALS

Number of 60 minute intervals covered

Calculation

```
PERLEN / (1.0 * 60)
```

INTERVALS_MSC

Number of 60 minute intervals covered (from BSC objects in MSC data)

Calculation

```
PERLEN_MSC / (1.0 * 60)
```

NUMDAYS

of days in Report

Calculation

```
DAYSINREPORT()
```

NUMHOURS

of hours in Summation Data

Calculation

PROC_LOAD%

BSC processor load

Calculation

```
CP_LOAD%
```

TCH_Traffic

Traffic in Erlangs

Calculation

```
protect(sum(BTSSite.Cell,TFTRALACC / (1.0 * TFNSCAN_CELTCHF) * PERLEN /
60.0))
```

TCH_Traffic_BH

Traffic in Erlangs

Calculation

```
protect(sum(BTSSite.Cell,TFTRALACC / (1.0 * TFNSCAN_CELTCHF) * PERLEN /
60.0))
```

VENDORTECH

Vendor Technology

Calculation

```
isNull( PERLEN ) ? nullString() : "EricssonGSM"
```

BSC Peg Counts

The following is a list of peg counts for the BSC entity.

ABLOL

Number of RP's in blocking state, aut. blocked

Data Source

BSC_IOG20_APG40

Source Field

ABLOL

Source Section

RP

ABORT

Number of 08.71 ABORT messagessent to the SMLC.

Data Source

BSC_IOG20_APG40

Source Field

ABORT

Source Section

BSCPOS

ACCLOAD

Accumulated Processor Load in percent

Data Source

BSC_IOG20_APG40

Source Field

ACCLOAD

Source Section

LOAS

ALLPDCHPCUATT

Number of attempts to allocate PCU resources for PDCHs.

Data Source

BSC_IOG20_APG40

Source Field

ALLPDCHPCUATT

Source Section

BSCGPRS

ALLPDCHPCUFAIL

Cumulative number of failed PDCH (Packet Data Channel) due to no PCU (Packet Control Unit).

Data Source

BSC_IOG20_APG40

Source Field

ALLPDCHPCUFAIL

Source Section

BSCGPRS

AQMDELIVDATA

Total amount of data delivered by AQM in Kbit. This is generated per BSC.

Data Source

BSC_IOG20_APG40

Source Field

AQMDELIVDATA

Source Section

BSCGPRS

AQMRECDATA

Total amount of data received by AQM in Kbit.This is generated per BSC.

Data Source

BSC_IOG20_APG40

Source Field

AQMRECDATA

Source Section

BSCGPRS

BLOL

Number of blocked Ems

Data Source

BSC_IOG20_APG40

Source Field

BLOL

Source Section

EM

BLOL_RP

Number of blocked EMRPs. (Extension Module Regional Processor)

Data Source

BSC_IOG20_APG40

Source Field

BLOL

Source Section

EMRP

BLOLCLM_BSC

Number of blocked CLMs (blocking level)

Data Source

BSC_IOG20_APG40

Source Field

BLOLCLM

Source Section

GRPSWITCH

BLOLSPM_BSC

Number of blocked SPMs (blocking level) in both planes

Data Source

BSC_IOG20_APG40

Source Field

BLOLSPM

Source Section

GRPSWITCH

BLOLSPMA_BSC

Number of blocked SPMs (blocking level) in the A-plane

Data Source

BSC_IOG20_APG40

Source Field

BLOLSPMA

Source Section

GRPSWITCH

BLOLSPMB_BSC

Number of blocked SPMs (blocking level) in the B-plane

Data Source

BSC_IOG20_APG40

Source Field

BLOLSPMB

Source Section

GRPSWITCH

BLOLTSM_BSC

Number of blocked TSMs (blocking level) in both planes

Data Source

BSC_IOG20_APG40

Source Field

BLOLTSM

Source Section

GRPSWITCH

BLOLTSMA_BSC

Number of blocked TSMs (blocking level) in the A-plane

Data Source

BSC_IOG20_APG40

Source Field

BLOLTSMA

Source Section

GRPSWITCH

BLOLTSMB_BSC

Number of blocked TSMs (blocking level) in the B-plane.

Data Source

BSC_IOG20_APG40

Source Field

BLOLTSMB

Source Section

GRPSWITCH

BSCCUMMS

Cumulative number of MS sessions in the BSC

Data Source

BSC_IOG20_APG40

Source Field

BSCCUMMS

Source Section

BSC

BSCMAXMS

Number of ongoing MS sessions in the BSC

Data Source

BSC_IOG20_APG40

Source Field

BSCMAXMS

Source Section

BSC

BSS_RELEASE

Release

BUFFRS

Number of in-service buffers (TB&RTB)

Data Source

BSC_IOG20_APG40

Source Field

BUFFRS

Source Section

SS7TOTAL2

C7ROUTECNT

Number of occurrences of MSU discarded due to a routing data error

Data Source

BSC_IOG20_APG40

Source Field

C7ROUTECNT

Source Section

C7RTTOTAL

CONNSECT

Total number of simultaneous connection sections

Data Source

BSC_IOG20_APG40

Source Field

CONNSECT

Source Section

C7SCCPUSE

COREQSEG

Originating messages requiring segmentation. (connection oriented SCCP service)

Data Source

BSC_IOG20_APG40

Source Field

COREQSEG

Source Section

SS7SCQOS

CREFREC

Counter for CREF messages received from MTP

Data Source

BSC_IOG20_APG40

Source Field

CREFREC

Source Section

C7SCQOS

CREFSENT

Counter for CREF messages sent to MTP

Data Source

BSC_IOG20_APG40

Source Field

CREFSENT

Source Section

C7SCQOS

CRREC

Counter for CR messages received from MTP

Data Source

BSC_IOG20_APG40

Source Field

CRREC

Source Section

C7SCQOS

CRSENT

Counter for CR messages sent to MTP

Data Source

BSC_IOG20_APG40

Source Field

CRSENT

Source Section

C7SCQOS

CSEGRESF

Number of Segmentation-Reassembly errors.

Data Source

BSC_IOG20_APG40

Source Field

CSEGRESF

Source Section

SS7SCCPUSE

DELRELDLTBF

Tot nr of TBF for which the release is delayed. This counter shall only be triggered once per TBF.

Data Source

BSC_IOG20_APG40

Source Field

DELRELDLTBF

Source Section

BSCGPRS

DELRELTONRM

Nr of TBF in that resumes normal operation. This counter shall only be triggered once per TBF.

Data Source

BSC_IOG20_APG40

Source Field

DELRELTONRM

Source Section

BSCGPRS

DISCDL

Discarded PCU frames downlink for each PCU

Data Source

BSC_IOG20_APG40

Source Field

DISCDL

Source Section

BSCGPRS

DISCUL

Discarded PCU frames uplink for each PCU

Data Source

BSC_IOG20_APG40

Source Field

DISCUL

Source Section

BSCGPRS

DMSU_BSC

Number of discarded MSU's

Data Source

BSC_IOG20_APG40

Source Field

DMSU

Source Section

SS7TOTAL

DSIF_BSC

Number of discarded MSU's octets

Data Source

BSC_IOG20_APG40

Source Field

DSIF

Source Section

SS7TOTAL

ECTMCTMSD

Number of successful initial channel assignments when CTM text telephony is requested by the MS and a CTM circuit is seized

Data Source

MSC_IOG20_APG40

Source Field

ECTMCTMSD

Source Section

BSCSTAT2

ECTMMSNOT

Number of successful initial channel assignments when CTM text telephony is not requested by the MS but a CTM circuit is seized

Data Source

MSC_IOG20_APG40

Source Field

ECTMMSNOT

Source Section

BSCSTAT2

ECTMMSSUP

Number of initial channel assignments when text telephony is requested by the MS

Data Source

MSC_IOG20_APG40

Source Field

ECTMMSSUP

Source Section

BSCSTAT2

ECTMNCTMSD

Number of successful initial channel assignments when CTM text telephony is requested by the MS but a non-CTM circuit is seized

Data Source

MSC_IOG20_APG40

Source Field

ECTMNCTMSD

Source Section

BSCSTAT2

ERRREC

Counter for ERR messages received from MTP

Data Source

BSC_IOG20_APG40

Source Field

ERRREC

Source Section

C7SCQOS

ERRSENT

Counter for ERR messages sent to MTP

Data Source

BSC_IOG20_APG40

Source Field

ERRSENT

Source Section

C7SCQOS

ESUDLTBF

Tot nr of TBF set up in `Early Set-up of DL TBF mode`.

Data Source

BSC_IOG20_APG40

Source Field

ESUDLTBF

Source Section

BSCGPRS

ESUTONRM

nr of TBF in `Early Set-up of DL TBF mode` that enters normal operation

Data Source

BSC_IOG20_APG40

Source Field

ESUTONRM

Source Section

BSCGPRS

EXULNRM

Nr of UL TBFs in the BSC entering the that resumes normal operation. This counter shall only be triggered once per TBF.

Data Source

BSC_IOG20_APG40

Source Field

EXULNRM

Source Section

BSCGPRS

EXULTIP

Tot nr of UL TBFs in the BSC entering the .This counter shall only be triggered once per TBF.

Data Source

BSC_IOG20_APG40

Source Field

EXULTIP

Source Section

BSCGPRS

FAILMOVECELL

Number of times a cell relocation attempt is failed

Data Source

BSC_IOG20_APG40

Source Field

FAILMOVECELL

Source Section

BSCGPRS

FRSPV1

The number of Full Rate Speech Version 1 capable MS.

Data Source

BSC_APG40

Source Field

FRSPV1

Source Section

BSCAMSG

FRSPV2

The number of Full Rate Speech Version 2 capable MS.

Data Source

BSC_APG40

Source Field

FRSPV2

Source Section

BSCAMSG

FRSPV3

The number of Full Rate Speech Version 3 capable MS.

Data Source

BSC_APG40

Source Field

FRSPV3

Source Section

BSCAMSG

FRSPV5

The number of Full Rate Speech Version 5 capable MS.

Data Source

BSC_APG40

Source Field

FRSPV5

Source Section

BSCAMSG

FRV1UNATT

Unsuccessful Transcoder Resource Allocation Attempts,Full Rate Version 1.

Data Source

BSC_IOG20_APG40

Source Field

FRV1UNATT

Source Section

TRAPCOM

FRV2UNATT

Unsuccessful Transcoder Resource Allocation Attempts, Full Rate Version 2.

Data Source

BSC_IOG20_APG40

Source Field

FRV2UNATT

Source Section

TRAPCOM

FRV3UNATT

Unsuccessful Transcoder Resource Allocation Attempts, Full Rate Version 3.

Data Source

BSC_IOG20_APG40

Source Field

FRV3UNATT

Source Section

TRAPCOM

FRV5UNATT

Unsuccessful transcoder resource allocation attempts for Full Rate Speech Version 5

Data Source

BSC_APG40

Source Field

FRV5UNATT

Source Section

TRAPCOM

FTDTCAP

Number of capacity requests for low priority TCAP messages fetched by the Processor Load Control function

Data Source

BSC_IOG20_APG40

Source Field

FTDTCAP

Source Section

LOAS

G2GPH0040LOAD

Total number of scans where the GARP-2 load was between 0% and 40%

Data Source

BSC_APG40

Source Field

G2GPH0040LOAD

Source Section

BSCGPRS2

G2GPH4160LOAD

Total number of scans where the GARP-2 load was between 41% and 60%

Data Source

BSC_APG40

Source Field

G2GPH4160LOAD

Source Section

BSCGPRS2

G2GPH6180LOAD

Total number of scans where the GARP-2 load was between 61% and 80%

Data Source

BSC_APG40

Source Field

G2GPH6180LOAD

Source Section

BSCGPRS2

G2GPH8190LOAD

Total number of scans where the GARP-2 load was between 81% and 90%

Data Source

BSC_APG40

Source Field

G2GPH8190LOAD

Source Section

BSCGPRS2

G2GPH9100LOAD

Total number of scans where the GARP-2 load was between 91% and 100%

Data Source

BSC_APG40

Source Field

G2GPH9100LOAD

Source Section

BSCGPRS2

G2PGW0040LOAD

Number of scans where the PGW CPU load on GARP-2 was between 0% and 40%.

Data Source

BSC_APG40

Source Field

G2PGW0040LOAD

Source Section

PGW

G2PGW4160LOAD

Number of scans where the PGW CPU load on GARP-2 was between 41% and 60%

Data Source

BSC_APG40

Source Field

G2PGW4160LOAD

Source Section

PGW

G2PGW6180LOAD

Number of scans where the PGW CPU load on GARP-2 was between 61% and 80%

Data Source

BSC_APG40

Source Field

G2PGW6180LOAD

Source Section

PGW

G2PGW8190LOAD

Number of scans where the PGW CPU load on GARP-2 was between 81% and 90%

Data Source

BSC_APG40

Source Field

G2PGW8190LOAD

Source Section

PGW

G2PGW9100LOAD

Number of scans where the PGW CPU load on GARP-2 was between 91% and 100%

Data Source

BSC_APG40

Source Field

G2PGW9100LOAD

Source Section

PGW

G2TRH0040LOAD

Counts the total number of scans where the GARP-2 load was between 0% and 40%

Data Source

BSC_APG40

Source Field

G2TRH0040LOAD

Source Section

TRH

G2TRH4160LOAD

Counts the total number of scans where the GARP-2 load was between 41% and 60%.

Data Source

BSC_APG40

Source Field

G2TRH4160LOAD

Source Section

TRH

G2TRH6180LOAD

Counts the total number of scans where the GARP-2 load was between 61% and 80%.

Data Source

BSC_APG40

Source Field

G2TRH6180LOAD

Source Section

TRH

G2TRH8190LOAD

Counts the total number of scans where the GARP-2 load was between 81% and 90%.

Data Source

BSC_APG40

Source Field

G2TRH8190LOAD

Source Section

TRH

G2TRH9100LOAD

Counts the total number of scans where the GARP-2 load was between 91% and 100%.

Data Source

BSC_APG40

Source Field

G2TRH9100LOAD

Source Section

TRH

GBTIMECONG

Accumulated time when PCU discard algorithm was active (sec), DL (only valid for Gb over IP.

Data Source

BSC_APG40

Source Field

GBTIMECONG

Source Section

GPRSCAP

GBTRAFPEAK

Peak Gb traffic throughput, DL (kbit/s)

Data Source

BSC_APG40

Source Field

GBTRAFPEAK

Source Section

GPRSCAP

GBTRAFVOL

Accumulated Gb traffic volume, DL (kbit/s)

Data Source

BSC_APG40

Source Field

GBTRAFVOL

Source Section

GPRSCAP

GSL0040

Tot nr of scans where fraction (maximum GSL devices possible to use) is between 0% and 40%.

Data Source

BSC_IOG20_APG40

Source Field

GSL0040

Source Section

BSCGPRS

GSL4160

Tot nr of scans where fraction (maximum GSL devices possible to use) is between 41% and 60%.

Data Source

BSC_IOG20_APG40

Source Field

GSL4160

Source Section

BSCGPRS

GSL6180

Tot nr of scans where fraction (maximum GSL devices possible to use) is between 61% and 80%.

Data Source

BSC_IOG20_APG40

Source Field

GSL6180

Source Section

BSCGPRS

GSL8190

Tot nr of scans where fraction (maximum GSL devices possible to use) is between 81% and 490%.

Data Source

BSC_IOG20_APG40

Source Field

GSL8190

Source Section

BSCGPRS

GSL9100

Tot nr of scans where fraction (maximum GSL devices possible to use) is between 91% and 100%.

Data Source

BSC_IOG20_APG40

Source Field

GSL9100

Source Section

BSCGPRS

GSLMAX

Accumulated nr of maximum GSL 16 kbit/s devices possible to use, calculated at each scan

Data Source

BSC_IOG20_APG40

Source Field

GSLMAX

Source Section

BSCGPRS

GSLSCAN

Tot nr of scans of the PCU taken in relation to the GSL device utilisation.

Data Source

BSC_IOG20_APG40

Source Field

GSLSCAN

Source Section

BSCGPRS

GSLSSCAN

Total number of scans of the GSL Device utilization counters.

Data Source

BSC_IOG20_APG40

Source Field

GSLSSCAN

Source Section

BSCGPRS

GSLUTIL

Accumulated nr of maximum GSL devices possible to use, fractions calculated for each scan.

Data Source

BSC_IOG20_APG40

Source Field

GSLUTIL

Source Section

BSCGPRS

GSM1800CUMMS

Cumulative number of MS sessions in the BSC in GSM 1800 system

Data Source

BSC_IOG20_APG40

Source Field

GSM1800CUMMS

Source Section

BSC

GSM1800MAXMS

Number of ongoing MS sessions in the BSC in GSM 1800 system

Data Source

BSC_IOG20_APG40

Source Field

GSM1800MAXMS

Source Section

BSC

GSM400CUMMS

Cumulative number of MS sessions in the BSC in GSM 400 system

Data Source

BSC_IOG20_APG40

Source Field

GSM400CUMMS

Source Section

BSC

GSM400MAXMS

Number of ongoing MS sessions in the BSC in GSM 400 system

Data Source

BSC_IOG20_APG40

Source Field

GSM400MAXMS

Source Section

BSC

GSM800CUMMS

Cumulative number of MS sessions in the BSC in GSM 800 system

Data Source

BSC_IOG20_APG40

Source Field

GSM800CUMMS

Source Section

BSC

GSM800MAXMS

Number of ongoing MS sessions in the BSC in GSM 800 system

Data Source

BSC_IOG20_APG40

Source Field

GSM800MAXMS

Source Section

BSC

GSM900CUMMS

Cumulative number of MS sessions in the BSC in GSM 900 system

Data Source

BSC_IOG20_APG40

Source Field

GSM900CUMMS

Source Section

BSC

GSM900MAXMS

Number of ongoing MS sessions in the BSC in GSM 900 system

Data Source

BSC_IOG20_APG40

Source Field

GSM900MAXMS

Source Section

BSC

HLSCGREL

Number of attempted SCGR relocations caused by ?high? load

Data Source

BSC_APG40

Source Field

HLSCGREL

Source Section

PGWLDIST

HRSPV1

The number of Half Rate Speech Version 1 capable MS.

Data Source

BSC_APG40

Source Field

HRSPV1

Source Section

BSCAMSG

HRSPV3

The number of Half Rate Speech Version 3 capable MS.

Data Source

BSC_APG40

Source Field

HRSPV3

Source Section

BSCAMSG

HRV1UNATT

Unsuccessful Transcoder Resource Allocation Attempts, Half Rate Version 1.

Data Source

BSC_IOG20_APG40

Source Field

HRV1UNATT

Source Section

TRAPCOM

HRV2UNATT

Unsuccessful Transcoder Resource Allocation Attempts, Half Rate Version 2.

Data Source

BSC_IOG20_APG40

Source Field

HRV2UNATT

Source Section

TRAPCOM

HRV3UNATT

Unsuccessful Transcoder Resource Allocation Attempts, Half Rate Version 3.

Data Source

BSC_IOG20_APG40

Source Field

HRV3UNATT

Source Section

TRAPCOM

IMSU_BSC

Number of incoming MSU's

Data Source

BSC_IOG20_APG40

Source Field

IMSU

Source Section

SS7TOTAL

ISIF_BSC

Number of incoming SIF octets

Data Source

BSC_IOG20_APG40

Source Field

ISIF

Source Section

SS7TOTAL

LCCELLMOV

Number of succeeded cell move attempt by PCU Load Control

Data Source

BSC_IOG20_APG40

Source Field

LCCELLMOV

Source Section

GPHLOADREG

LCCELLMOVREJ

Number of failed cell move attempts by PCU Load Control due to lack of RPP candidates with low load (only valid for force move of cell).

Data Source

BSC_IOG20_APG40

Source Field

LCCELLMOVREJ

Source Section

GPHLOADREG

LCHIRPPLOAD

Increased at every 500ms interval when in any of the High Load Modes for an RPP.

Data Source

BSC_IOG20_APG40

Source Field

LCHIRPPLOAD

Source Section

GPHLOADREG

LCMSSUPRFC

The time when MS Flow Control has been sent with a reduced bucket size, due to lack of PCU-RP memory. The counter is increased by one every 20th second as long as this action is in use.

Data Source

BSC_IOG20_APG40

Source Field

LCMSSUPRFC

Source Section

GPHLOADREG

LCPARREJ

Number of rejected Packet Access Request per BSC due to lack of RPP memory.

Data Source

BSC_IOG20_APG40

Source Field

LCPARREJ

Source Section

GPHLOADREG

LCRELBUSYHI3

Number of active PDCHs released due to entering High Load Mode.

Data Source

BSC_IOG20_APG40

Source Field

LCRELBUSYHI3

Source Section

GPHLOADREG

LCRELIDLEHI3

Number of idle PDCHs released due to entering High Load Mode 3.

Data Source

BSC_IOG20_APG40

Source Field

LCRELIDLEHI3

Source Section

GPHLOADREG

LINKS

Total number of assigned signalling link.

Data Source

BSC_IOG20_APG40

Source Field

LINKS

Source Section

SS7TOTAL2

LNKSETS

Number of assigned link sets

Data Source

BSC_IOG20_APG40

Source Field

LNKSETS

Source Section

SS7TOTAL2

MSGHAND

Total messages handled from local or remote subsystem

Data Source

BSC_IOG20_APG40

Source Field

MSGHAND

Source Section

C7SCCPUSE

MSGPOL

Counter for syntax error detected

Data Source

BSC_IOG20_APG40

Source Field

MSGPOL

Source Section

C7SCPERF

MSGPOLREJ

Counter for not allowed policed messages

Data Source

BSC_IOG20_APG40

Source Field

MSGPOLREJ

Source Section

C7SCPERF

MSGRCL0

Total messages received for connectionless class 0

Data Source

BSC_IOG20_APG40

Source Field

MSGRCL0

Source Section

C7SCCPUSE

MSGRCL1

Total messages received for connectionless class 1

Data Source

BSC_IOG20_APG40

Source Field

MSGRCL1

Source Section

C7SCCPUSE

MSGRQGT

Counter for messages requiring global title translation

Data Source

BSC_IOG20_APG40

Source Field

MSGRQGT

Source Section

C7SCCPUSE

MSGSCL0

Total messages sent for connectionless class 0

Data Source

BSC_IOG20_APG40

Source Field

MSGSCL0

Source Section

C7SCCPUSE

MSGSCL1

Total messages sent for connectionless class 1

Data Source

BSC_IOG20_APG40

Source Field

MSGSCL1

Source Section

C7SCCPUSE

MSINVDPC_BSC

Number of MSUs discarded due to invalid destination point code

Data Source

BSC_IOG20_APG40

Source Field

MSINVDPC

Source Section

SS7TOTAL

MSINVSIO_BSC

Number of MSUs discarded due to invalid Service Indicator Octet

Data Source

BSC_IOG20_APG40

Source Field

MSINVSIO

Source Section

SS7TOTAL

MTPREST

Number of MTP restarts initiated at the TP/SEP

Data Source

BSC_IOG20_APG40

Source Field

MTPREST

Source Section

SS7TOTAL2

NACCBLOT_BSC

Accumulated system blocking time, in seconds.

Data Source

BSC_IOG20_APG40

Source Field

NACCBLOT

Source Section

CP

NACCPCO

nr of PACKET CELL CHANGE ORDER (PCCO) (44.060) messages sent per BSC

Data Source

BSC_IOG20_APG40

Source Field

NACCPCO

Source Section

BSCGPRS

NBLOCLMACC_BSC

Accumulated number of blocked CLMs.

Data Source

BSC_IOG20_APG40

Source Field

NBLOCLMACC

Source Section

GRPSWITCH

NBLOL

Number of RP's in blocking state, man. blocked

Data Source

BSC_IOG20_APG40

Source Field

NBLOL

Source Section

RP

NBLOSPMAACC_BSC

Number of blocked SPM's in the A-plane

Data Source

BSC_IOG20_APG40

Source Field

NBLOSPMAACC

Source Section

GRPSWITCH

NBLOSPMACC_BSC

Number of blocked SPM's in both planes

Data Source

BSC_IOG20_APG40

Source Field

NBLOSPMACC

Source Section

GRPSWITCH

NBLOSPMBACC_BSC

Number of blocked SPM's in the B-plane

Data Source

BSC_IOG20_APG40

Source Field

NBLOSPMBACC

Source Section

GRPSWITCH

NBLOTSMAACC_BSC

Accumulated number of blocked TSMs in the A-plane

Data Source

BSC_IOG20_APG40

Source Field

NBLOTSMAACC

Source Section

GRPSWITCH

NBLOTSMACC_BSC

Accumulated number of blocked TSMs in both planes

Data Source

BSC_IOG20_APG40

Source Field

NBLOTSMACC

Source Section

GRPSWITCH

NBLOTSMBACC_BSC

Accumulated number of blocked TSMs in the B-plane

Data Source

BSC_IOG20_APG40

Source Field

NBLOTSMBACC

Source Section

GRPSWITCH

NBSCOINRCVSUCC

Number of successful Location Information Report messages received from the target BSC

Data Source

MSC_IOG20_APG40

Source Field

NBSCOINRCVSUCC

Source Section

BSCSTAT

NBSCOINSNTTOT

Number of sent Connection Oriented Information messages to the target BSC

Data Source

MSC_IOG20_APG40

Source Field

NBSCOINSNTTOT

Source Section

BSCSTAT

NBSDFRFRSUCC

successful initial channel assignments with channel rate and type in 'assignment request' equal to dual FR and FR assigned

Data Source

MSC_IOG20_APG40

Source Field

NBSDFRFRSUCC

Source Section

BSCSTAT

NBSDFRHRSUCC

successful initial channel assignments with channel rate and type in 'assignment request' equal to dual FR and HR assigned

Data Source

MSC_IOG20_APG40

Source Field

NBSDFRHRSUCC

Source Section

BSCSTAT

NBSDFRSUCC

successful initial channel assignments with channel rate and type in 'assignment request' equal to dual without preference and FR assigned

Data Source

MSC_IOG20_APG40

Source Field

NBSDFRSUCC

Source Section

BSCSTAT

NBSDFRTOT

initial channel assignments with channel rate and type in 'assignment request' equal to dual FR

Data Source

MSC_IOG20_APG40

Source Field

NBSDFRTOT

Source Section

BSCSTAT

NBSDHRFRSUCC

successful initial channel assignments with channel rate and type in 'assignment request' equal to dual HR and FR assigned

Data Source

MSC_IOG20_APG40

Source Field

NBSDHRFRSUCC

Source Section

BSCSTAT

NBSDHRHRSUCC

successful initial channel assignments with channel rate and type in 'assignment request' equal to dual HR and HR assigned

Data Source

MSC_IOG20_APG40

Source Field

NBSDHRHRSUCC

Source Section

BSCSTAT

NBSDHRSUCC

successful initial channel assignments with channel rate and type in 'assignment request' equal to dual without preference and HR assigned

Data Source

MSC_IOG20_APG40

Source Field

NBSDHRSUCC

Source Section

BSCSTAT

NBSDHRTOT

initial channel assignments with channel rate and type in 'assignment request' equal to dual HR

Data Source

MSC_IOG20_APG40

Source Field

NBSDHRTOT

Source Section

BSCSTAT

NBSDTOT

initial channel assignments with channel rate and type in 'assignment request' equal to dual without preference

Data Source

MSC_IOG20_APG40

Source Field

NBSDTOT

Source Section

BSCSTAT

NBSFRFRSUCC

successful initial channel assignments with channel rate and type 'assignment request' equal to FR

Data Source

MSC_IOG20_APG40

Source Field

NBSFRFRSUCC

Source Section

BSCSTAT

NBSFRTOT

initial channel assignments with channel rate and type 'assignment request' equal to FR

Data Source

MSC_IOG20_APG40

Source Field

NBSFRTOT

Source Section

BSCSTAT

NBSFRV1ANPTOT

Number of successful initial channel assignments with speech coder other than FRV1 preferred and FRV1 assigned

Data Source

MSC_IOG20_APG40

Source Field

NBSFRV1ANPTOT

Source Section

CODERASGN

NBSFRV1ATOT

Number of successful initial channel assignments with speech coder FRV1 assigned

Data Source

MSC_IOG20_APG40

Source Field

NBSFRV1ATOT

Source Section

CODERASGN

NBSFRV1PTOT

Number of initial channel assignments with speech coder FRV1 preferred

Data Source

MSC_IOG20_APG40

Source Field

NBSFRV1PTOT

Source Section

CODERASGN

NBSFRV2ANPTOT

Number of successful initial channel assignments with speech coder other than FRV2 preferred and FRV2 assigned

Data Source

MSC_IOG20_APG40

Source Field

NBSFRV2ANPTOT

Source Section

CODERASGN

NBSFRV2ATOT

Number of successful initial channel assignments with speech coder FRV2 assigned

Data Source

MSC_IOG20_APG40

Source Field

NBSFRV2ATOT

Source Section

CODERASGN

NBSFRV2PTOT

Number of initial channel assignments with speech coder FRV2 preferred

Data Source

MSC_IOG20_APG40

Source Field

NBSFRV2PTOT

Source Section

CODERASGN

NBSFRV3ANPTOT

Number of successful initial channel assignments with speech coder other than FRV3 preferred and FRV3 assigned

Data Source

MSC_IOG20_APG40

Source Field

NBSFRV3ANPTOT

Source Section

CODERASGN

NBSFRV3ATOT

Number of successful initial channel assignments with speech coder FRV3 assigned

Data Source

MSC_IOG20_APG40

Source Field

NBSFRV3ATOT

Source Section

CODERASGN

NBSFRV3PTOT

Number of initial channel assignments with speech coder FRV3 preferred

Data Source

MSC_IOG20_APG40

Source Field

NBSFRV3PTOT

Source Section

CODERASGN

NBSHRHRSUCC

successful initial channel assignments with channel rate and type in 'assignment request' equal to HR

Data Source

MSC_IOG20_APG40

Source Field

NBSHRHRSUCC

Source Section

BSCSTAT

NBSHRTOT

initial channel assignments with channel rate and type in 'assignment request' equal to HR

Data Source

MSC_IOG20_APG40

Source Field

NBSHRTOT

Source Section

BSCSTAT

NBSHRV1ANPTOT

Number of successful initial channel assignments with speech coder other than HRV1 preferred and HRV1 assigned

Data Source

MSC_IOG20_APG40

Source Field

NBSHRV1ANPTOT

Source Section

CODERASGN

NBSHRV1ATOT

Number of successful initial channel assignments with speech coder HRV1 assigned

Data Source

MSC_IOG20_APG40

Source Field

NBSHRV1ATOT

Source Section

CODERASGN

NBSHRV1PTOT

Number of initial channel assignments with speech coder HRV1 preferred

Data Source

MSC_IOG20_APG40

Source Field

NBSHRV1PTOT

Source Section

CODERASGN

NBSHRV2ANPTOT

Number of successful initial channel assignments with speech coder other than HRV2 preferred and HRV2 assigned

Data Source

MSC_IOG20_APG40

Source Field

NBSHRV2ANPTOT

Source Section

CODERASGN

NBSHRV2ATOT

Number of successful initial channel assignments with speech coder HRV2 assigned

Data Source

MSC_IOG20_APG40

Source Field

NBSHRV2ATOT

Source Section

CODERASGN

NBSHRV2PTOT

Number of initial channel assignments with speech coder HRV2 preferred

Data Source

MSC_IOG20_APG40

Source Field

NBSHRV2PTOT

Source Section

CODERASGN

NBSHRV3ANPTOT

Number of successful initial channel assignments with speech coder other than HRV3 preferred and HRV3 assigned

Data Source

MSC_IOG20_APG40

Source Field

NBSHRV3ANPTOT

Source Section

CODERASGN

NBSHRV3ATOT

Number of successful initial channel assignments with speech coder HRV3 assigned

Data Source

MSC_IOG20_APG40

Source Field

NBSHRV3ATOT

Source Section

CODERASGN

NBSHRV3PTOT

Number of initial channel assignments with speech coder HRV3 preferred

Data Source

MSC_IOG20_APG40

Source Field

NBSHRV3PTOT

Source Section

CODERASGN

NBSLOCINCMDTOT

Number of sent Location Information Command messages to the target BSC

Data Source

MSC_IOG20_APG40

Source Field

NBSLOCINCMDTOT

Source Section

BSCSTAT

NBSLOCINREPSUCC

Number of successful Location Information Report messages received from the target BSC

Data Source

MSC_IOG20_APG40

Source Field

NBSLOCINREPSUCC

Source Section

BSCSTAT

NBSMSLSUCC

successful initial channel assignments with channel rate and type in 'assignment request' in a multi-slot configuration

Data Source

MSC_IOG20_APG40

Source Field

NBSMSLSUCC

Source Section

BSCSTAT

NBSMSLTOT

initial channel assignments with channel rate and type in 'assignment request' in a multi-slot configuration

Data Source

MSC_IOG20_APG40

Source Field

NBSMSLTOT

Source Section

BSCSTAT

NBSOVLSTOT

Number of sent OVERLOAD messages to the BSC

Data Source

MSC_IOG20_APG40

Source Field

NBSOVLSTOT

Source Section

BSCSTAT2

NBSPCHACMTOT

A-interface circuit pool number mismatch at channel assignment completion or handover completion

Data Source

MSC_IOG20_APG40

Source Field

NBSPCHACMTOT

Source Section

BSCSTAT

NBSPCHAFMTOT

channel assignment failures or handover failures due to A-interface circuit pool mismatch reason

Data Source

MSC_IOG20_APG40

Source Field

NBSPCHAFMTOT

Source Section

BSCSTAT

NBSPCHAFSWTOT

channel assignment failures or handover failures due to A-interface switch circuit pool reason

Data Source

MSC_IOG20_APG40

Source Field

NBSPCHAFSWTOT

Source Section

BSCSTAT

NBSPEHNDTOT

external intra-BSS handovers attempted for each BSC for A-interface circuit pool handling reasons

Data Source

MSC_IOG20_APG40

Source Field

NBSPEHNDTOT

Source Section

BSCSTAT

NBSRLOCRESSUCC

Number of successful PERFORM LOCATION RESPONSE messages received from the target BSC

Data Source

MSC_IOG20_APG40

Source Field

NBSRLOCRESSUCC

Source Section

BSCSTAT2

NBSSLOCREQTOT

Number of PERFORM LOCATION REQUEST messages sent to the target BSC

Data Source

MSC_IOG20_APG40

Source Field

NBSSLOCREQTOT

Source Section

BSCSTAT2

NBSTIHBSUCC

Number of successful incoming handovers to the BSC

Data Source

MSC_IOG20_APG40

Source Field

NBSTIHBSUCC

Source Section

BSCSTAT

NBSTIUGHBSUCC

Number of successful incoming handovers to the BSC during UMTS to GSM handover

Data Source

MSC_IOG20_APG40

Source Field

NBSTIUGHBSUCC

Source Section

BSCSTAT

NBSTOGUHBSUCC

Number of successful outgoing handover from the BSC

Data Source

MSC_IOG20_APG40

Source Field

NBSTOGUHBSUCC

Source Section

BSCSTAT2

NBSTOHBSUCC

Number of successful outgoing handovers from the BSC

Data Source

MSC_IOG20_APG40

Source Field

NBSTOHBSUCC

Source Section

BSCSTAT

NBSTRGUHRTOT

Number of handover required messages received

Data Source

MSC_IOG20_APG40

Source Field

NBSTRGUHRTOT

Source Section

BSCSTAT2

NBSTRHPTOT

Number of successful internal intra-BSS handovers (handover performed)

Data Source

MSC_IOG20_APG40

Source Field

NBSTRHPTOT

Source Section

BSCSTAT

NBSTRHRTOT

Number of received handover required messages

Data Source

MSC_IOG20_APG40

Source Field

NBSTRHRTOT

Source Section

BSCSTAT

NBSTRRMTOT

Number of received reset messages

Data Source

MSC_IOG20_APG40

Source Field

NBSTRRMTOT

Source Section

BSCSTAT

NBSTSHRTOT

Number of sent handover request messages to the target BSC

Data Source

MSC_IOG20_APG40

Source Field

NBSTSHRTOT

Source Section

BSCSTAT

NBSTSMITTOT

Number of sent MSC Invoke Trace messages to the target BSC

Data Source

MSC_IOG20_APG40

Source Field

NBSTSMITTOT

Source Section

BSCSTAT

NBSTSUGHRTOT

Number of handover request messages sent to the target BSC during UMTS to GSM handover (NBSTSUGHRTOT)

Data Source

MSC_IOG20_APG40

Source Field

NBSTSUGHRTOT

Source Section

BSCSTAT

NC2CONF

The number of times per BSC that MSs have sent at least one 44.060 PACKET MEASUREMENT REPORT message after being ordered to enter NC2.

Data Source

BSC_APG40

Source Field

NC2CONF

Source Section

BSCGPRS2

NC2ORDER

The number of times per BSC that MSs were ordered to NC2 and remained in NC2 long enough to be given the opportunity to send at least one 44.060 PACKET MEASUREMENT REPORT message.

Data Source

BSC_APG40

Source Field

NC2ORDER

Source Section

BSCGPRS2

NC2PCO

The number of 44.060 PACKET CELL CHANGE ORDER messages sent per BSC while the MS was in NC2

Data Source

BSC_APG40

Source Field

NC2PCO

Source Section

BSCGPRS2

NCAPREJCNT

Accumulations in requested HLR

Data Source

BSC_IOG20_APG40

Source Field

NCAPREJCNT

Source Section

LOAS

NCAPREQCNT

Number of Processor capacity requested in HLR

Data Source

BSC_IOG20_APG40

Source Field

NCAPREQCNT

Source Section

LOAS

NCLM_BSC

Number of CLMs

Data Source

BSC_IOG20_APG40

Source Field

NCLM

Source Section

GRPSWITCH

NCPABLOT_BSC

Accumulated time of blocked CP-unit, autamatically blocked, in seconds.

Data Source

BSC_IOG20_APG40

Source Field

NCPABLOT

Source Section

CP

NCPMBLOT_BSC

Accumulated time of blocked CP-unit, manually blocked, in seconds.

Data Source

BSC_IOG20_APG40

Source Field

NCPMBLOT

Source Section

CP

NEM

Number of Ems(Extension Modules).

Data Source

BSC_IOG20_APG40

Source Field

NEM

Source Section

EM

NEMG

Number of EMGs.(Extension Module Group)

Data Source

BSC_IOG20_APG40

Source Field

NEMG

Source Section

EMG

NEMRP

Number of EMRPs. (Extension Module Regional Processor)

Data Source

BSC_IOG20_APG40

Source Field

NEMRP

Source Section

EMRP

NFORLAPT_BSC

Number of forlopps aborted by APT.

Data Source

BSC_IOG20_APG40

Source Field

NFORLAPT

Source Section

CP

NFORLAPZ_BSC

Number of forlopps aborted by APZ.

Data Source

BSC_IOG20_APG40

Source Field

NFORLAPZ

Source Section

CP

NFORLMAN_BSC

Number of forlopps aborted manually.

Data Source

BSC_IOG20_APG40

Source Field

NFORLMAN

Source Section

CP

NFTDEMC

originating emergency calls accepted by the block RMSCS

Data Source

BSC_IOG20_APG40

Source Field

NFTDEMC

Source Section

LOADREG

NFTDIEX

Number of incoming external calls fetched from the Exchange Input Load Supervision function.

Data Source

BSC_IOG20_APG40

Source Field

NFTDIEX

Source Section

LOAS

NFTDMHI

emergency calls and packet channel allocation attempts fetched from the Exchange Input Load Supervision Function

Data Source

BSC_IOG20_APG40

Source Field

NFTDMHI

Source Section

LOAS

NFTDMLO

The number of fetched high- and low priority maintenance tasks in Base Level Load Regulation.

Data Source

BSC_IOG20_APG40

Source Field

NFTDMLO

Source Section

LOAS

NFTDMT0

Number of emergency calls fetched from the Exchange Input Load Supervision function.

Data Source

BSC_IOG20_APG40

Source Field

NFTDMT0

Source Section

LOASMISC

NFTDMT1

Number of requests of miscellaneous tasks with priority level one fetched by the Processor Load Control function

Data Source

BSC_IOG20_APG40

Source Field

NFTDMT1

Source Section

LOASMISC

NFTDMT10

Number of requests of miscellaneous tasks with priority level 10 fetched by the Processor Load Control function

Data Source

BSC_IOG20_APG40

Source Field

NFTDMT10

Source Section

LOASMISC

NFTDMT12

Number of fetched System Information tasks due to distribution of circuit switch System Information messages to the BSC.

Data Source

BSC_IOG20_APG40

Source Field

NFTDMT12

Source Section

LOASMISC

NFTDMT13

Number of fetched high priority Base Level Load Regulation (BALREG) tasks.

Data Source

BSC_IOG20_APG40

Source Field

NFTDMT13

Source Section

LOASMISC

NFTDMT14

Number of fetched low priority BaseLevel Load Regulation (BALREG) tasks.

Data Source

BSC_IOG20_APG40

Source Field

NFTDMT14

Source Section

LOASMISC

NFTDMT15

Number of requests of miscellaneous tasks with priority level 15 fetched by the Processor Load Control function

Data Source

BSC_IOG20_APG40

Source Field

NFTDMT15

Source Section

LOASMISC

NFTDMT2

Number of requests of miscellaneous tasks with priority level 2 fetched by the Processor Load Control function

Data Source

BSC_IOG20_APG40

Source Field

NFTDMT2

Source Section

LOASMISC

NFTDMT3

Number of requests of miscellaneous tasks with priority level 3 fetched by the Processor Load Control function

Data Source

BSC_IOG20_APG40

Source Field

NFTDMT3

Source Section

LOASMISC

NFTDMT4

Number of TRA requests to TRC fetched from the Exchange Input Load Supervision function.

Data Source

BSC_IOG20_APG40

Source Field

NFTDMT4

Source Section

LOASMISC

NFTDMT5

Number of requests of miscellaneous tasks with priority level 5 fetched by the Processor Load Control function

Data Source

BSC_IOG20_APG40

Source Field

NFTDMT5

Source Section

LOASMISC

NFTDMT6

Number of requests of miscellaneous tasks with priority level 6 fetched by the Processor Load Control function

Data Source

BSC_IOG20_APG40

Source Field

NFTDMT6

Source Section

LOASMISC

NFTDMT7

Number of requests of miscellaneous tasks with priority level 7 fetched by the Processor Load Control function

Data Source

BSC_IOG20_APG40

Source Field

NFTDMT7

Source Section

LOASMISC

NFTDMT8

Number of requests of miscellaneous tasks with priority level 8 fetched by the Processor Load Control function

Data Source

BSC_IOG20_APG40

Source Field

NFTDMT8

Source Section

LOASMISC

NFTDMT9

Number of requests of miscellaneous tasks with priority level 9 fetched by the Processor Load Control function

Data Source

BSC_IOG20_APG40

Source Field

NFTDMT9

Source Section

LOASMISC

NFTDNPRIO_BSC

Number of non-priority originating calls fetched from the Processor Load Control function

Data Source

BSC_IOG20_APG40

Source Field

NFTDNPRIO

Source Section

LOAS

NFTDORG

originating calls (emergency calls not included) fetched from the Exchange Input Load Supervision function.

Data Source

BSC_IOG20_APG40

Source Field

NFTDORG

Source Section

LOAS

NFTDPRIO_BSC

Number of priority originating calls fetched from the Processor Load Control function

Data Source

BSC_IOG20_APG40

Source Field

NFTDPRIO

Source Section

LOAS

NFTDTCAP

Number of accepted processor capacity requests for low priority TCAP messages

Data Source

BSC_IOG20_APG40

Source Field

NFTDTCAP

Source Section

LOAS

NLRGA_BSC

Number of large restarts without reload, automatically initiated.

Data Source

BSC_IOG20_APG40

Source Field

NLRGA

Source Section

CP

NLRGM_BSC

Number of large restarts without reload, manually initiated.

Data Source

BSC_IOG20_APG40

Source Field

NLRGM

Source Section

CP

NMAUABLOT_BSC

Accumulated time of blocked MAU/AMU autamatically blocked, in seconds.

Data Source

BSC_IOG20_APG40

Source Field

NMAUABLOT

Source Section

CP

NMAUF_BSC

Number of MAU/AMU faults

Data Source

BSC_IOG20_APG40

Source Field

NMAUF

Source Section

CP

NMAUMBLOT_BSC

Accumulated time of blocked MAU/AMU, manually blocked, in seconds.

Data Source

BSC_IOG20_APG40

Source Field

NMAUMBLOT

Source Section

CP

NNOREC_BSC

Number of prog executions terminated

Data Source

BSC_IOG20_APG40

Source Field

NNOREC

Source Section

CP

NOFFIEX

Number of incoming external calls offered to the Exchange Input Load Supervision function.

Data Source

BSC_IOG20_APG40

Source Field

NOFFIEX

Source Section

LOAS

NOFFMHI

emergency calls and packet channel allocation attempts offered to the Exchange Input Load Supervision Function

Data Source

BSC_IOG20_APG40

Source Field

NOFFMHI

Source Section

LOAS

NOFFMLO

The number of offered high- and low priority maintenance tasks in Base Level Load Regulation.

Data Source

BSC_IOG20_APG40

Source Field

NOFFMLO

Source Section

LOAS

NOFFMT0

Number of emergency calls offered to the Exchange Input Load Supervision function.

Data Source

BSC_IOG20_APG40

Source Field

NOFFMT0

Source Section

LOASMISC

NOFFMT1

Number of requests of miscellaneous tasks with priority level one offered to the Processor Load Control function

Data Source

BSC_IOG20_APG40

Source Field

NOFFMT1

Source Section

LOASMISC

NOFFMT10

Number of requests of miscellaneous tasks with priority level 10 offered to the Processor Load Control function

Data Source

BSC_IOG20_APG40

Source Field

NOFFMT10

Source Section

LOASMISC

NOFFMT12

Number of offered System Information tasks due to distribution of circuit switch System Information messages to the BSC.

Data Source

BSC_IOG20_APG40

Source Field

NOFFMT12

Source Section

LOASMISC

NOFFMT13

Number of offered high priority Base Level Regulation (BALREG) tasks.

Data Source

BSC_IOG20_APG40

Source Field

NOFFMT13

Source Section

LOASMISC

NOFFMT14

Number of offered low priority Base Level Regulation (BALREG) tasks.

Data Source

BSC_IOG20_APG40

Source Field

NOFFMT14

Source Section

LOASMISC

NOFFMT15

Number of requests of miscellaneous tasks with priority level 15 offered to the Processor Load Control function

Data Source

BSC_IOG20_APG40

Source Field

NOFFMT15

Source Section

LOASMISC

NOFFMT2

Number of requests of miscellaneous tasks with priority level 2 offered to the Processor Load Control function

Data Source

BSC_IOG20_APG40

Source Field

NOFFMT2

Source Section

LOASMISC

NOFFMT3

Number of requests of miscellaneous tasks with priority level 3 offered to the Processor Load Control function

Data Source

BSC_IOG20_APG40

Source Field

NOFFMT3

Source Section

LOASMISC

NOFFMT4

Number of TRA requests to TRC offered to the Exchange Input Load Supervision function.

Data Source

BSC_IOG20_APG40

Source Field

NOFFMT4

Source Section

LOASMISC

NOFFMT5

Number of requests of miscellaneous tasks with priority level 5 offered to the Processor Load Control function

Data Source

BSC_IOG20_APG40

Source Field

NOFFMT5

Source Section

LOASMISC

NOFFMT6

Number of requests of miscellaneous tasks with priority level 6 offered to the Processor Load Control function

Data Source

BSC_IOG20_APG40

Source Field

NOFFMT6

Source Section

LOASMISC

NOFFMT7

Number of requests of miscellaneous tasks with priority level 7 offered to the Processor Load Control function

Data Source

BSC_IOG20_APG40

Source Field

NOFFMT7

Source Section

LOASMISC

NOFFMT8

Number of requests of miscellaneous tasks with priority level 8 offered to the Processor Load Control function

Data Source

BSC_IOG20_APG40

Source Field

NOFFMT8

Source Section

LOASMISC

NOFFMT9

Number of requests of miscellaneous tasks with priority level nine fetched by the Processor Load Control function

Data Source

BSC_IOG20_APG40

Source Field

NOFFMT9

Source Section

LOASMISC

NOFFNPRIO_BSC

Number of non-priority originating calls offered to the Processor Load Control function

Data Source

BSC_IOG20_APG40

Source Field

NOFFNPRIO

Source Section

LOAS

NOFFORG

originating calls offered (emergency calls not included) to the Exchange Input Load Supervision function.

Data Source

BSC_IOG20_APG40

Source Field

NOFFORG

Source Section

LOAS

NOFFPRIO_BSC

Number of priority originating calls offered to the Processor Load Control function

Data Source

BSC_IOG20_APG40

Source Field

NOFFPRIO

Source Section

LOAS

NOFFTCAP

Number of processor capacity requests for low priority TCAP messages offered to the Processor Load Control function

Data Source

BSC_IOG20_APG40

Source Field

NOFFTCAP

Source Section

LOAS

NPBITF_BSC

Number of permanent bitfaults

Data Source

BSC_IOG20_APG40

Source Field

NPBITF

Source Section

CP

NPCPF_BSC

Number of permanent CP-faults

Data Source

BSC_IOG20_APG40

Source Field

NPCPF

Source Section

CP

NPERMF

Number of permanent faults in RP

Data Source

BSC_IOG20_APG40

Source Field

NPERMF

Source Section

RP

NPERMF_EMG

Number of permanent faults in EMG.(Extension Module Group)

Data Source

BSC_IOG20_APG40

Source Field

NPERMF

Source Section

EMG

NREJEMC

originating emergency calls rejected by the block RMSCS

Data Source

BSC_IOG20_APG40

Source Field

NREJEMC

Source Section

LOADREG

NREJIEX

Number of mobile terminating calls rejected by the Process Load Control in BSC/TRC function

Data Source

BSC_IOG20_APG40

Source Field

NREJIEX

Source Section

LOADREG

NREJNPRIO

Number of location updates rejected by the Processor Load Control function

Data Source

BSC_IOG20_APG40

Source Field

NREJNPRIO

Source Section

LOADREG

NREJORG

originating calls rejected by the block RMSCS

Data Source

BSC_IOG20_APG40

Source Field

NREJORG

Source Section

LOADREG

NREJPCH

packet channel allocation attempts rejected

Data Source

BSC_IOG20_APG40

Source Field

NREJPCH

Source Section

LOADREG

NREJPRIO

Number of normal originating connections rejected by the Processor Load Control function

Data Source

BSC_IOG20_APG40

Source Field

NREJPRIO

Source Section

LOADREG

NRELA_BSC

Number of large restarts with reload, automatically initiated.

Data Source

BSC_IOG20_APG40

Source Field

NRELA

Source Section

CP

NRELM_BSC

Number of large restarts with reload, manually initiated.

Data Source

BSC_IOG20_APG40

Source Field

NRELM

Source Section

CP

NRP

Number of RP's

Data Source

BSC_IOG20_APG40

Source Field

NRP

Source Section

RP

NSCAN

Accumulations

Data Source

BSC_IOG20_APG40

Source Field

NSCAN

Source Section

LOAS

NSCAN_GRPSWITCH_BSC

Number of accumulations.

Data Source

BSC_IOG20_APG40

Source Field

NSCAN

Source Section

GRPSWITCH

NSMLA_BSC

Number of small restarts automatically initiated.

Data Source

BSC_IOG20_APG40

Source Field

NSMLA

Source Section

CP

NSMLM_BSC

Number of small restarts manually initiated.

Data Source

BSC_IOG20_APG40

Source Field

NSMLM

Source Section

CP

NSPM_BSC

Number of SPMs.

Data Source

BSC_IOG20_APG40

Source Field

NSPM

Source Section

GRPSWITCH

NT10SRST

T1.111.4 T10 Timer in seconds.

Data Source

BSC_IOG20_APG40

Source Field

NT10SRST

Source Section

SS7TIMERS

NT11TFRS

T1.111.4 T11 Timer in seconds.

Data Source

BSC_IOG20_APG40

Source Field

NT11TFRS

Source Section

SS7TIMERS

NT12UNAK

T1.111.4 T12 Timer in 100millisecond units.

Data Source

BSC_IOG20_APG40

Source Field

NT12UNAK

Source Section

SS7TIMERS

NT13FUNH

T1.111.4 T13 Timer in 100millisecond units.

Data Source

BSC_IOG20_APG40

Source Field

NT13FUNH

Source Section

SS7TIMERS

NT14INAK

T1.111.4 T14 Timer in seconds.

Data Source

BSC_IOG20_APG40

Source Field

NT14INAK

Source Section

SS7TIMERS

NT15RSCT

T1.111.4 T15 Timer in seconds.

Data Source

BSC_IOG20_APG40

Source Field

NT15RSCT

Source Section

SS7TIMERS

NT16RSCS

T1.111.4 T16 Timer in 100millisecond units.

Data Source

BSC_IOG20_APG40

Source Field

NT16RSCS

Source Section

SS7TIMERS

NT19FLKR

T1.111.4 T19 Timer in seconds.

Data Source

BSC_IOG20_APG40

Source Field

NT19FLKR

Source Section

SS7TIMERS

NT1TDCHO

T1.111.4 T1 Timer in 100 millisecond units.

Data Source

BSC_IOG20_APG40

Source Field

NT1TDCHO

Source Section

SS7TIMERS

NT20RLIH

T1.111.4 T20 Timer in seconds.

Data Source

BSC_IOG20_APG40

Source Field

NT20RLIH

Source Section

SS7TIMERS

NT21RRIH

T1.111.4 T21 Timer in seconds.

Data Source

BSC_IOG20_APG40

Source Field

NT21RRIH

Source Section

SS7TIMERS

NT2CHOAK

T1.111.4 T2 Timer in 100 millisecond units.

Data Source

BSC_IOG20_APG40

Source Field

NT2CHOAK

Source Section

SS7TIMERS

NT3TDCHB

T1.111.4 T3 Timer in 100 millisecond units.

Data Source

BSC_IOG20_APG40

Source Field

NT3TDCHB

Source Section

SS7TIMERS

NT4CHBK1

T1.111.4 T4 Timer in 100 millisecond units.

Data Source

BSC_IOG20_APG40

Source Field

NT4CHBK1

Source Section

SS7TIMERS

NT5CHBK2

T1.111.4 T5 Timer in 100 millisecond units.

Data Source

BSC_IOG20_APG40

Source Field

NT5CHBK2

Source Section

SS7TIMERS

NT6TDCRR

T1.111.4 T6 Timer in 100 millisecond units.

Data Source

BSC_IOG20_APG40

Source Field

NT6TDCRR

Source Section

SS7TIMERS

NT8TRPRH

T1.111.4 T8 Timer in 100 millisecond units.

Data Source

BSC_IOG20_APG40

Source Field

NT8TRPRH

Source Section

SS7TIMERS

NTBITF_BSC

Number of temporary bitfaults

Data Source

BSC_IOG20_APG40

Source Field

NTBITF

Source Section

CP

NTCPF_BSC

Number of temporary CP-faults

Data Source

BSC_IOG20_APG40

Source Field

NTCPF

Source Section

CP

NTEMPF

Number of temporary faults in RP

Data Source

BSC_IOG20_APG40

Source Field

NTEMPF

Source Section

RP

NTSM_BSC

Number of TSMs

Data Source

BSC_IOG20_APG40

Source Field

NTSM

Source Section

GRPSWITCH

OCTRETRN_BSC

Number of octets retransmitted

Data Source

BSC_IOG20_APG40

Source Field

OCTRETRN

Source Section

SS7TOTAL

OMMSU_BSC

Number of originating management MSU's

Data Source

BSC_IOG20_APG40

Source Field

OMMSU

Source Section

SS7TOTAL

OMSIF_BSC

Number of originating management MSU octets

Data Source

BSC_IOG20_APG40

Source Field

OMSIF

Source Section

SS7TOTAL

OUMSU_BSC

Number of originating SCCP/UP MSU's

Data Source

BSC_IOG20_APG40

Source Field

OUMSU

Source Section

SS7TOTAL

OUSIF_BSC

Number of originating SCCP/UP MSU octets

Data Source

BSC_IOG20_APG40

Source Field

OUSIF

Source Section

SS7TOTAL

P95FPHGT_BSC

Number of sampled translated MSUs failing normal-load 95% test for CP handling time

Data Source

BSC_IOG20_APG40

Source Field

P95FPHGT

Source Section

SS7TOTAL

P95FPHNT_BSC

Number of sampled non-translated MSUs failing normal-load 95% test for CP handling time.

Data Source

BSC_IOG20_APG40

Source Field

P95FPHNT

Source Section

SS7TOTAL

PAGCSBSC

Cumulative # PAGING CS messages received from Serving General Packet Radio Services (GPRS) Support Node (SGSN) with paging area set to BSC or Location Area

Data Source

BSC_IOG20_APG40

Source Field

PAGCSBSC

Source Section

BSCGPRS

PAGCSCONG

Cumulative number of PAGING CS messages received from the SGSN that are rejected due to congestion.

Data Source

BSC_IOG20_APG40

Source Field

PAGCSCONG

Source Section

BSCGPRS

PAGPSBSC

Cumulative # PAGING PS messages received from the SGSN with paging area set to the BSC or Location Area.

Data Source

BSC_IOG20_APG40

Source Field

PAGPSBSC

Source Section

BSCGPRS

PAIRABLOL

Number of pair of RP's in blocking state, aut. blocked

Data Source

BSC_IOG20_APG40

Source Field

PAIRABLOL

Source Section

RP

PAIRABLOL1

Number of RP's, in an RP-pair, in blocking state, aut blocked

Data Source

BSC_IOG20_APG40

Source Field

PAIRABLOL1

Source Section

RP

PAIRMBLOL

Number of pair of RP's in blocking state, man. blocked

Data Source

BSC_IOG20_APG40

Source Field

PAIRMBLOL

Source Section

RP

PAIRMBLOL1

Number of RP's, in an RP-pair, in blocking state, man blocked

Data Source

BSC_IOG20_APG40

Source Field

PAIRMBLOL1

Source Section

RP

PBPGW0040LOAD

Counts the total number of scans where the PGW load on PGWB was between 0% and 40%

Data Source

BSC_APG40

Source Field

PBPGW0040LOAD

Source Section

PGW

PBPGW4160LOAD

Counts the total number of scans where the PGW load on PGWB was between 41% and 60%

Data Source

BSC_APG40

Source Field

PBPGW4160LOAD

Source Section

PGW

PBPGW6180LOAD

Counts the total number of scans where the PGW load on PGWB was between 61% and 80%

Data Source

BSC_APG40

Source Field

PBPGW6180LOAD

Source Section

PGW

PBPGW8190LOAD

Counts the total number of scans where the PGW load on PGWB was between 81% and 90%

Data Source

BSC_APG40

Source Field

PBPGW8190LOAD

Source Section

PGW

PBPGW9100LOAD

Counts the total number of scans where the PGW load was between 91% and 100%

Data Source

BSC_APG40

Source Field

PBPGW9100LOAD

Source Section

PGW

PENDCONTSTRTBF

Accumulated nr of times a Streaming TBF continue as a Streaming TBF after TSTREAMPENDING has been triggered.

Data Source

BSC_IOG20_APG40

Source Field

PENDCONTSTRTBF

Source Section

DELSTRTBF

PENDSTRTBF

Accumulated nr of times when TSTREAMPENDING has been triggered.

Data Source

BSC_IOG20_APG40

Source Field

PENDSTRTBF

Source Section

DELSTRTBF

PERFLOCABORT

Number of 09.31 PERFORM LOCATION ABORT messages sent to the SMLC.

Data Source

BSC_IOG20_APG40

Source Field

PERFLOCABORT

Source Section

BSCPOS

PERFLOCREQ

Number of 09.31 PERFORM LOCATION REQUEST messages sent to the SMLC.

Data Source

BSC_IOG20_APG40

Source Field

PERFLOCREQ

Source Section

BSCPOS

PERFLOCRESP

Number of 48.008 PERFORM LOCATION RESPONSE messages sent to the MSC.

Data Source

BSC_IOG20_APG40

Source Field

PERFLOCRESP

Source Section

BSCPOS

PERLEN

Period Length

PERLEN_MSC

Period Length (of BSC objects in MSC data)

PGWHLRPP

Number of PGW-RPs where the CPU load has exceeded the "high" load Threshold

Data Source

BSC_APG40

Source Field

PGWHLRPP

Source Section

PGWLDIST

RCBFSZMS

Link receiving message buffer size in MSUs

Data Source

BSC_IOG20_APG40

Source Field

RCBFSZMS

Source Section

SS7TOTAL2

RESET

Number of 08.71 RESET messagessent to the SMLC.

Data Source

BSC_IOG20_APG40

Source Field

RESET

Source Section

BSCPOS

RFNETCONG

Counter for routing failure, network congestion

Data Source

BSC_IOG20_APG40

Source Field

RFNETCONG

Source Section

C7SCPERF

RFNETFAIL

Counter for routing failure, network failure (MTP or SCCP failure)

Data Source

BSC_IOG20_APG40

Source Field

RFNETFAIL

Source Section

C7SCPERF

RFSPADDR

Counter for routing failure, no translation for this specific address

Data Source

BSC_IOG20_APG40

Source Field

RFSPADDR

Source Section

C7SCPERF

RFSSNFAIL

Counter for routing failure, subsystem failure

Data Source

BSC_IOG20_APG40

Source Field

RFSSNFAIL

Source Section

C7SCPERF

RFSUADDR

Counter for routing failure, no translation for address of such nature

Data Source

BSC_IOG20_APG40

Source Field

RFSUADDR

Source Section

C7SCPERF

RFUNEQUIP

Counter for routing failure, unequipped user

Data Source

BSC_IOG20_APG40

Source Field

RFUNEQUIP

Source Section

C7SCPERF

RFUNQUAL

Counter for routing failure, reason unqualified

Data Source

BSC_IOG20_APG40

Source Field

RFUNQUAL

Source Section

C7SCPERF

RPP0040

Tot nr of scans where the RPP load was between 0% and 40%

Data Source

BSC_IOG20_APG40

Source Field

RPP0040

Source Section

BSCGPRS2

RPP4160

Tot nr of scans where the RPP load was between 41% and 60%

Data Source

BSC_IOG20_APG40

Source Field

RPP4160

Source Section

BSCGPRS2

RPP6180

Tot nr of scans where the RPP load was between 61% and 80%

Data Source

BSC_IOG20_APG40

Source Field

RPP6180

Source Section

BSCGPRS2

RPP8190

Tot nr of scans where the RPP load was between 81% and 90%

Data Source

BSC_IOG20_APG40

Source Field

RPP8190

Source Section

BSCGPRS2

RPP9100

Tot nr of scans where the RPP load was between 91% and 100%

Data Source

BSC_IOG20_APG40

Source Field

RPP9100

Source Section

BSCGPRS2

SAMPPHGT_BSC

Number of MSUs requiring GTT, sampled for CP handling time

Data Source

BSC_IOG20_APG40

Source Field

SAMPPHGT

Source Section

SS7TOTAL

SAMPPHNT_BSC

Number of MSUs not requiring GTT, sampled for CP handling time.

Data Source

BSC_IOG20_APG40

Source Field

SAMPPHNT

Source Section

SS7TOTAL

SHLSCGREL

Number of successful SCGR relocations caused by ?high? load

Data Source

BSC_APG40

Source Field

SHLSCGREL

Source Section

PGWLDIST

SIZEDS_BSC

Memory size of data store

Data Source

BSC_IOG20_APG40

Source Field

SIZEDS

Source Section

CP

SIZEPS_BSC

Memory size of program store/main store

Data Source

BSC_IOG20_APG40

Source Field

SIZEPS

Source Section

CP

SIZERS_BSC

Memory size of reference store

Data Source

BSC_IOG20_APG40

Source Field

SIZERS

Source Section

CP

SPEECHCALL

The number of SETUP and CALL CONFIRMED messages.

Data Source

BSC_APG40

Source Field

SPEECHCALL

Source Section

BSCAMSG

STARTCONTSTRTBF

Accumulated nr of times a Streaming TBF continue as a Streaming TBF after TSTREAMSTART has been triggered.

Data Source

BSC_IOG20_APG40

Source Field

STARTCONTSTRTBF

Source Section

DELSTRTBF

STARTSTRTBF

Accumulated nr of times when TSTREAMSTART has been triggered.

Data Source

BSC_IOG20_APG40

Source Field

STARTSTRTBF

Source Section

DELSTRTBF

SVHLSCGREL

Number of successful SCGR relocations caused by ?very high? load

Data Source

BSC_APG40

Source Field

SVHLSCGREL

Source Section

PGWLDIST

SYERROR

Counter for syntax error detected

Data Source

BSC_IOG20_APG40

Source Field

SYERROR

Source Section

C7SCPERF

TIMEPHGT_BSC

Accumulated total of CP handling time for sampled GTT MSUs in ms

Data Source

BSC_IOG20_APG40

Source Field

TIMEPHGT

Source Section

SS7TOTAL

TIMEPHNT_BSC

Accumulated total of CP handling time for sampled non-translated MSUs in ms.

Data Source

BSC_IOG20_APG40

Source Field

TIMEPHNT

Source Section

SS7TOTAL

TMASSALL

Assignment attempts for Multislot connections

Data Source

BSC_IOG20_APG40

Source Field

TMASSALL

Source Section

BSCMSLOT

TMCASSALL

Assignment complete for Multislot connections

Data Source

BSC_IOG20_APG40

Source Field

TMCASSALL

Source Section

BSCMSLOT

TMCHRECACC

Number of received channels for Multislot connections accumulator

Data Source

BSC_IOG20_APG40

Source Field

TMCHRECACC

Source Section

BSCMSLOT

TMCHREQACC

Number of requested channels for Multislot connections accumulator

Data Source

BSC_IOG20_APG40

Source Field

TMCHREQACC

Source Section

BSCMSLOT

TMCHSCAN

Number of accumulations of requested and received channels for Multislot connections counter

Data Source

BSC_IOG20_APG40

Source Field

TMCHSCAN

Source Section

BSCMSLOT

TMCNCBATT

Configuration change attempts for Multislot connections initiated by the SC

Data Source

BSC_IOG20_APG40

Source Field

TMCNCBATT

Source Section

BSCMSLOT

TMCNCBSUCC

Successful configuration changes for Multislot connections initiated by the BSC

Data Source

BSC_IOG20_APG40

Source Field

TMCNCBSUCC

Source Section

BSCMSLOT

TMCNCMATT

Configuration change attempts for Multislot connections initiated by the MSC

Data Source

BSC_IOG20_APG40

Source Field

TMCNCMATT

Source Section

BSCMSLOT

TMCNCMSUCC

Successful configuration changes for Multislot connections initiated by the MSC

Data Source

BSC_IOG20_APG40

Source Field

TMCNCMSUCC

Source Section

BSCMSLOT

TMHOATT

Handover attempts for Multislot connections

Data Source

BSC_IOG20_APG40

Source Field

TMHOATT

Source Section

BSCMSLOT

TMHOSUCC

Successful handovers for Multislot connections

Data Source

BSC_IOG20_APG40

Source Field

TMHOSUCC

Source Section

BSCMSLOT

TMMSU_BSC

Number of terminating management MSU's

Data Source

BSC_IOG20_APG40

Source Field

TMMSU

Source Section

SS7TOTAL

TMSIF_BSC

Number of terminating management SIF octets

Data Source

BSC_IOG20_APG40

Source Field

TMSIF

Source Section

SS7TOTAL

TOTCONGPAG

Number of Paging messages discarded due to congestion

Data Source

BSC_IOG20_APG40

Source Field

TOTCONGPAG

Source Section

BSC

TOTPAG

Number of paging messages received from the MSC

Data Source

BSC_IOG20_APG40

Source Field

TOTPAG

Source Section

BSC

TOTSCBUF1

Total number of simultaneous buffers of 256 octet length

Data Source

BSC_IOG20_APG40

Source Field

TOTSCBUF1

Source Section

C7SCCPUSE

TOTSCBUF2

Total number of simultaneous buffers of 512 octet length

Data Source

BSC_IOG20_APG40

Source Field

TOTSCBUF2

Source Section

C7SCCPUSE

TOTSCBUF3

Total number of simultaneous buffers of 1024 octet length

Data Source

BSC_IOG20_APG40

Source Field

TOTSCBUF3

Source Section

C7SCCPUSE

TOTSCBUF4

Total number of simultaneous buffers of 2048 octet length

Data Source

BSC_IOG20_APG40

Source Field

TOTSCBUF4

Source Section

C7SCCPUSE

TRASSYNCF

V.110 Synchronization Failure for semipermanently connected transcoder devices

Data Source

BSC_IOG20_APG40

Source Field

TRASSYNCF

Source Section

TRASEVENT

TREQRES

Terminating messages requiring reassembly. (connection oriented SCCP service)

Data Source

BSC_IOG20_APG40

Source Field

TREQRES

Source Section

SS7SCQOS

TSMODECS

Number of 'Remote Transcoder Lost' fault reports for Circuit Switched TS Mode.

Data Source

BSC_IOG20_APG40

Source Field

TSMODECS

Source Section

TRALOST

TSMODEIDLE

Number of 'Remote Transcoder Lost' fault reports for Idle TS Mode.

Data Source

BSC_IOG20_APG40

Source Field

TSMODEIDLE

Source Section

TRALOST

TSMODEPS

Number of 'Remote Transcoder Lost' fault reports for Packet Switched TS Mode.

Data Source

BSC_IOG20_APG40

Source Field

TSMODEPS

Source Section

TRALOST

TUMSU_BSC

Number of terminating SCCP/UP MSU's

Data Source

BSC_IOG20_APG40

Source Field

TUMSU

Source Section

SS7TOTAL

TUSIF_BSC

Number of terminating SCCP/UP SIF octets

Data Source

BSC_IOG20_APG40

Source Field

TUSIF

Source Section

SS7TOTAL

TXBFSZOC

Link transmission buffer size in octets

Data Source

BSC_IOG20_APG40

Source Field

TXBFSZOC

Source Section

SS7TOTAL2

UDTREC

Counter for UDT messages received from MTP

Data Source

BSC_IOG20_APG40

Source Field

UDTREC

Source Section

C7SCQOS

UDTSENT

Counter for UDT messages sent to MTP

Data Source

BSC_IOG20_APG40

Source Field

UDTSENT

Source Section

C7SCQOS

UDTSREC

Counter for UDTS messages received from MTP

Data Source

BSC_IOG20_APG40

Source Field

UDTSREC

Source Section

C7SCQOS

UDTSSENT

Counter for UDTS messages sent to MTP

Data Source

BSC_IOG20_APG40

Source Field

UDTSSENT

Source Section

C7SCQOS

USGSCNVC

30-minutes usage verification count , in 10 sec units

Data Source

BSC_IOG20_APG40

Source Field

USGSCNVC

Source Section

SS7TOTAL2

VHLSCGREL

Number of attempted SCGR relocations caused by ?very high? load

Data Source

BSC_APG40

Source Field

VHLSCGREL

Source Section

PGWLDIST

XUDTREC

Counter for XUDT messages received from MTP

Data Source

BSC_IOG20_APG40

Source Field

XUDTREC

Source Section

C7SCQOS

XUDTSENT

Counter for XUDT messages sent to MTP

Data Source

BSC_IOG20_APG40

Source Field

XUDTSENT

Source Section

C7SCQOS

XUDTSREC

Counter for XUDTS messages received from MTP

Data Source

BSC_IOG20_APG40

Source Field

XUDTSREC

Source Section

C7SCQOS

XUDTSSENT

Counter for XUDTS messages sent to MTP

Data Source

BSC_IOG20_APG40

Source Field

XUDTSSENT

Source Section

C7SCQOS

Z22

T1.111.4 T22 Timer in seconds.

Data Source

BSC_IOG20_APG40

Source Field

Z22

Source Section

SS7TIMERS

Z23

T1.111.4 T23 Timer in seconds.

Data Source

BSC_IOG20_APG40

Source Field

Z23

Source Section

SS7TIMERS

Z24

T1.111.4 T24 Timer in seconds.

Data Source

BSC_IOG20_APG40

Source Field

Z24

Source Section

SS7TIMERS

Z25

T1.111.4 T25 Timer in seconds.

Data Source

BSC_IOG20_APG40

Source Field

Z25

Source Section

SS7TIMERS

Z26

T1.111.4 T26 Timer in seconds.

Data Source

BSC_IOG20_APG40

Source Field

Z26

Source Section

SS7TIMERS

Z27

T1.111.4 T27 Timer in seconds.

Data Source

BSC_IOG20_APG40

Source Field

Z27

Source Section

SS7TIMERS

Z28

T1.111.4 T28 Timer in seconds.

Data Source

BSC_IOG20_APG40

Source Field

Z28

Source Section

SS7TIMERS

Z29

T1.111.4 T29 Timer in seconds.

Data Source

BSC_IOG20_APG40

Source Field

Z29

Source Section

SS7TIMERS

Z30

T1.111.4 T30 Timer in seconds.

Data Source

BSC_IOG20_APG40

Source Field

Z30

Source Section

SS7TIMERS

Z31

T1.111.4 T31 Timer in seconds.

Data Source

BSC_IOG20_APG40

Source Field

Z31

Source Section

SS7TIMERS

Z32

T1.111.4 T32 Timer in seconds.

Data Source

BSC_IOG20_APG40

Source Field

Z32

Source Section

SS7TIMERS

BSC_NI Primitive Calculations

The following is a list of primitive calculations for the BSC_NI entity.

GRAPHmultiLineSeparator

Special Control Field for Multi-Line Graphs

Calculation

```
""
```

NUMDAYS

of days in Report

Calculation

```
DAYSINREPORT()
```

NUMHOURS

of hours in Summation Data

Calculation

BSC_SS7Dest Primitive Calculations

The following is a list of primitive calculations for the BSC_SS7Dest entity.

LocalName

BSC_C7Dest Name

Calculation

```
LocalKey
```

BSC_SS7HSLPrmGrp Primitive Calculations

The following is a list of primitive calculations for the BSC_SS7HSLPrmGrp entity.

GRAPHmultiLineSeparator

Special Control Field for Multi-Line Graphs

Calculation

```
""
```

LocalName

BSC_SS7HSLPrmGrp Name

Calculation

```
LocalKey
```

NUMDAYS

of days in Report

Calculation

```
DAYSINREPORT()
```

NUMHOURS

of hours in Summation Data

Calculation

VENDORTECH

Vendor Tech

Calculation

```
isNull( PERLEN ) ? nullString() : "EricssonGSM"
```

BSC_SS7HSLPrmGrp Peg Counts

The following is a list of peg counts for the BSC_SS7HSLPrmGrp entity.

AERMM

AERM parameter M.

Data Source

BSC_IOG20_APG40

Source Field

AERMM

Source Section

SS7PRGRP

AERMN

AERM parameter N in octets.

Data Source

BSC_IOG20_APG40

Source Field

AERMN

Source Section

SS7PRGRP

AERMTIE

AERM parameter Tie.

Data Source

BSC_IOG20_APG40

Source Field

AERMTIE

Source Section

SS7PRGRP

AERMTIN

AERM parameter Tin.

Data Source

BSC_IOG20_APG40

Source Field

AERMTIN

Source Section

SS7PRGRP

ALPHA

A (alpha), exponential smoothing factor

Data Source

BSC_IOG20_APG40

Source Field

ALPHA

Source Section

SS7HSLPG1

CNGABTH1

Value of congestion abatement for level 1, CNGABTH1 = (number of octets in TR/RTB buffer when level 1 is reached / 1000)

Data Source

BSC_IOG20_APG40

Source Field

CNGABTH1

Source Section

SS7HSLPG2

CNGABTH2

Value of congestion abatement for level 2, CNGABTH2 = (number of octets in TR/RTB buffer when level 2 is reached / 1000)

Data Source

BSC_IOG20_APG40

Source Field

CNGABTH2

Source Section

SS7HSLPG2

CNGABTH3

Value of congestion abatement for level 3, CNGABTH3 = (number of octets in TR/RTB buffer when level 3 is reached / 1000)

Data Source

BSC_IOG20_APG40

Source Field

CNGABTH3

Source Section

SS7HSLPG2

CNGDITH1

Value of congestion discard for level 1, CNGDITH1 = (number of octets in TR/RTB buffer when level 1 is reached / 1000)

Data Source

BSC_IOG20_APG40

Source Field

CNGDITH1

Source Section

SS7HSLPG2

CNGDITH2

Value of congestion discard for level 2, CNGDITH2 = (number of octets in TR/RTB buffer when level 2 is reached / 1000)

Data Source

BSC_IOG20_APG40

Source Field

CNGDITH2

Source Section

SS7HSLPG2

CNGDITH3

Value of congestion discard for level 3, CNGDITH3 = (number of octets in TR/RTB buffer when level 3 is reached / 1000)

Data Source

BSC_IOG20_APG40

Source Field

CNGDITH3

Source Section

SS7HSLPG2

CNGONTH1

Value of congestion onset for level 1, CNGONTH1 = (number of octets in TB/RTB buffer when level 1 is reached / 1000).

Data Source

BSC_IOG20_APG40

Source Field

CNGONTH1

Source Section

SS7HSLPG2

CNGONTH2

Value of congestion onset for level 2, CNGONTH2 = (number of octets in TB/RTB buffer when level 2 is reached / 1000).

Data Source

BSC_IOG20_APG40

Source Field

CNGONTH2

Source Section

SS7HSLPG2

CNGONTH3

Value of congestion onset for level 3, CNGONTH3 = (number of octets in TB/RTB buffer when level 3 is reached / 1000)

Data Source

BSC_IOG20_APG40

Source Field

CNGONTH3

Source Section

SS7HSLPG2

ERRCORR

correction method

Data Source

BSC_IOG20_APG40

Source Field

ERRCORR

Source Section

SS7PRGRP

HLR_RELEASE

HLR Release

LT1ALNRD

T1.111.3 T1 Timer, "aligned/ready" in 50 ms units.

Data Source

BSC_IOG20_APG40

Source Field

LT1ALNRD

Source Section

SS7PRGRP

LT1UNACK

Timer_CC, time between transmission of unacknowledged BGN, END, ER, or RS PDUs

Data Source

BSC_IOG20_APG40

Source Field

LT1UNACK

Source Section

SS7HSLPG1

LT2NOALN

T1.111.3 T2 Timer, "not aligned" in 50 ms units.

Data Source

BSC_IOG20_APG40

Source Field

LT2NOALN

Source Section

SS7PRGRP

LT3ALIND

T1.111.3 T3 Timer, "aligned" in 50 msunits.

Data Source

BSC_IOG20_APG40

Source Field

LT3ALIND

Source Section

SS7PRGRP

LT4EMGPV

T1.111.3 T4 Timer, emergency proving period timer in 50 ms units.

Data Source

BSC_IOG20_APG40

Source Field

LT4EMGPV

Source Section

SS7PRGRP

LT4NMLPV

T1.111.3 T4 Timer, normal proving period timer in 50 ms units.

Data Source

BSC_IOG20_APG40

Source Field

LT4NMLPV

Source Section

SS7PRGRP

LT5DSIB

T1.111.3 T5 Timer, "sending SIB" in 50 ms units.

Data Source

BSC_IOG20_APG40

Source Field

LT5DSIB

Source Section

SS7PRGRP

LT6RMCNG

T1.111.3 T6 Timer, "remotecongestion" in 50 ms units.

Data Source

BSC_IOG20_APG40

Source Field

LT6RMCNG

Source Section

SS7PRGRP

LT7XDLAK

T1.111.3 T7 Timer, "excessive delay of acknowledgement" in 50 ms units.

Data Source

BSC_IOG20_APG40

Source Field

LT7XDLAK

Source Section

SS7PRGRP

LTBLCKSZ

T_sup, superblock size

Data Source

BSC_IOG20_APG40

Source Field

LTBLCKSZ

Source Section

SS7HSLPG1

LTFORPRV

Timer_FORCE-PROVING, force proving

Data Source

BSC_IOG20_APG40

Source Field

LTFORPRV

Source Section

SS7HSLPG1

LTKPALIV

Timer_KEEP-ALIVE, keep alive for 3622 cells/sec signalling rate

Data Source

BSC_IOG20_APG40

Source Field

LTKPALIV

Source Section

SS7HSLPG1

LTMAXPDU

Timer_NO-RESPONSE, maximum time interval during which at least one STAT PDU must be received

Data Source

BSC_IOG20_APG40

Source Field

LTMAXPDU

Source Section

SS7HSLPG1

LTMXIDLE

Timer_IDLE, maximum time of the IDLE phase of an SSCOP connection

Data Source

BSC_IOG20_APG40

Source Field

LTMXIDLE

Source Section

SS7HSLPG1

LTNOCRED

Timer_NO-CREDIT, maximum interval without credit

Data Source

BSC_IOG20_APG40

Source Field

LTNOCRED

Source Section

SS7HSLPG1

LTPRVPDU

Timer_T3, time between proving PDUs in 1ms

Data Source

BSC_IOG20_APG40

Source Field

LTPRVPDU

Source Section

SS7HSLPG1

LTPULLRT

Timer_POLL, Poll for 3622 cells/sec signalling rate

Data Source

BSC_IOG20_APG40

Source Field

LTPULLRT

Source Section

SS7HSLPG1

LTSCCFAL

Timer_T2, time SSCF will attempt alignment

Data Source

BSC_IOG20_APG40

Source Field

LTSCCFAL

Source Section

SS7HSLPG1

LTSCCOPR

Timer_REPEAT-SREC, minimum interval between reports of an SSCOP recovery

Data Source

BSC_IOG20_APG40

Source Field

LTSCCOPR

Source Section

SS7HSLPG1

LTSETALG

Timer_T1, time between link release and re-establishment during alignment

Data Source

BSC_IOG20_APG40

Source Field

LTSETALG

Source Section

SS7HSLPG1

LTSTATLS

T_loss, STAT loss limit

Data Source

BSC_IOG20_APG40

Source Field

LTSTATLS

Source Section

SS7HSLPG1

LTTAUERR

T (tau), error monitoring interval

Data Source

BSC_IOG20_APG40

Source Field

LTTAUERR

Source Section

SS7HSLPG1

MONEREVT

N, Monitoring intervals after 400ms error event

Data Source

BSC_IOG20_APG40

Source Field

MONEREVT

Source Section

SS7HSLPG1

MONINTER

N_blk, monitoring intervals per block

Data Source

BSC_IOG20_APG40

Source Field

MONINTER

Source Section

SS7HSLPG1

NMXSDPDU

MaxPD, maximum number of SD PDUs sent between POLL PDUs

Data Source

BSC_IOG20_APG40

Source Field

NMXSDPDU

Source Section

SS7HSLPG1

NMXSTPDU

MaxSTAT, maximum number of list elements in a STAT PDU

Data Source

BSC_IOG20_APG40

Source Field

NMXSTPDU

Source Section

SS7HSLPG1

NMXUNACK

MaxCC, maximum number of unacknowledged BGN, END, ER, or RS PDUs

Data Source

BSC_IOG20_APG40

Source Field

NMXUNACK

Source Section

SS7HSLPG1

NT17REAL

T1.111.4 T17 Timer, "delay to avoidoscillation of initial alignment failure and link restart" in ms.

Data Source

BSC_IOG20_APG40

Source Field

NT17REAL

Source Section

SS7PRGRP

PCRN2

Number of octets in TB and RTB before forced retransmission is ordered-64 -1. Valid only when ERRCORR = 2.

Data Source

BSC_IOG20_APG40

Source Field

PCRN2

Source Section

SS7PRGRP

PDUSENTP

N1, PDUs sent during normal proving

Data Source

BSC_IOG20_APG40

Source Field

PDUSENTP

Source Section

SS7HSLPG1

PERLEN

Period Length

SCCOPPDU

Max_NRP, maximum number of retransmitted SSCOP PDUs permissible for link proving

Data Source

BSC_IOG20_APG40

Source Field

SCCOPPDU

Source Section

SS7HSLPG1

SUERMD

SUERM parameter D in signal units/4.

Data Source

BSC_IOG20_APG40

Source Field

SUERMD

Source Section

SS7PRGRP

SUERMT

SUERM parameter T.

Data Source

BSC_IOG20_APG40

Source Field

SUERMT

Source Section

SS7PRGRP

TAS

T1.111.7 T1 Timer, "signalling linktest message acknowledgementsupervision" in sec.

Data Source

BSC_IOG20_APG40

Source Field

TAS

Source Section

SS7PRGRP

THRSRUNQ

Thres, threshold for comparing the running Quality of Service

Data Source

BSC_IOG20_APG40

Source Field

THRSRUNQ

Source Section

SS7HSLPG1

TTS

Signalling link test procedure periodin sec.

Data Source

BSC_IOG20_APG40

Source Field

TTS

Source Section

SS7PRGRP

BSC_SS7Link Primitive Calculations

The following is a list of primitive calculations for the BSC_SS7Link entity.

C7_SLTL_RX

C7 Link Received Traffic (Erlangs)

Calculation

```
(8 * vsum(nullValue(NSIFSRE,RECVDOCT_BSC_C7Link), (6 * null-
Value(NMSURE,MSURECD_BSC_C7Link))) / (1.0 * ((PERLEN * 60.0) * 64000)))
```

C7_SLTL_TX

C7 Link Transmitted Traffic (Erlangs)

Calculation

```
(8 * vsum(nullValue(NSIFTR,TRANOCT_BSC_C7Link), (6 * null-
Value(NMSUTR,MSUTRAN_BSC_C7Link))) / (1.0 * ((PERLEN * 60.0) * 64000)))
```

GRAPHmultiLineSeparator

Special Control Field for Multi-Line Graphs

Calculation

```
""
```

INTERVALS

Number of 60 minute intervals covered

Calculation

```
PERLEN / (1.0 * 60)
```

NumberMSUsReceived

Number of MSU's received

Calculation

```
nullValue(NMSURE,MSURECD_BSC_C7Link)
```

NumberMSUsTransmitted

Number of MSU's transmitted

Calculation

```
nullValue(NMSUTR,MSUTRAN_BSC_C7Link)
```

NumberSIFAndSIOOctetsReceived

Number of SIF and SIO octets received

Calculation

```
nullValue(NSIFSRE,RECVDOCT_BSC_C7Link)
```

NumberSIFAndSIOOctetsTransmitted

Number of SIF and SIO octets transmitted

Calculation

```
nullValue(NSIFTR,TRANOCT_BSC_C7Link)
```

NUMDAYS

of days in Report

Calculation

```
DAYSINREPORT()
```

NUMHOURS

of hours in Summation Data

Calculation

PercentageLinkAvailability

Percentage Link Availability

Calculation

```
nullValue(ASLDUR,TLNKACTV_BSC_C7Link) * 100.0 / (PERLEN * 60)
```

PercentageLocalBusy

Percentage Local Busy

Calculation

```
((10.0 * LBUSDUR) / (PERLEN * 60.0))
```

VENDORTECH

Vendor Technology

Calculation

```
isNull( PERLEN ) ? nullString() : "EricssonGSM"
```

BSC_SS7Link Peg Counts

The following is a list of peg counts for the BSC_SS7Link entity.

ACHGOVRS_BSC_C7Link

Number of automatic changeovers

Data Source

BSC_IOG20_APG40

Source Field

ACHGOVRS

Source Section

SS7SLMT2

ACHGOVRS_BSC_HSC7Link

Number of automatic changeovers

Data Source

BSC_IOG20_APG40

Source Field

ACHGOVRS

Source Section

SS7HSLMT2

ALGNFLRS_BSC_HSC7Link

Signalling link alignment failures

Data Source

BSC_IOG20_APG40

Source Field

ALGNFLRS

Source Section

SS7HSLMT2

ASLDUR

Duration of link in In-Service state in seconds.

Data Source

BSC_IOG20_APG40

Source Field

ASLDUR

Source Section

C7SL1

BSS_RELEASE

Release

CDISCONX_BSC_HSC7Link

Number of abnormal occurrences of SSCOP Connection Disconnect

Data Source

BSC_IOG20_APG40

Source Field

CDISCONX

Source Section

SS7HSLMT3

CGSTEVL_BSC_HSC7Link

Current link transmit congestion level

Data Source

BSC_IOG20_APG40

Source Field

CGSTEVL

Source Section

SS7HSLMT1

CGSTLEVL

Current link transmit congestion level is 0, 1, 2, or 3.

Data Source

BSC_IOG20_APG40

Source Field

CGSTLEVL

Source Section

SS7HSLMT1

CGSTLEVL_BSC_C7Link

Current Link Transmit Congestion Level

Data Source

BSC_IOG20_APG40

Source Field

CGSTLEVL

Source Section

SS7SLMT1

CGSTSTAT_BSC_C7Link

Current Link Transmit Congestion State

Data Source

BSC_IOG20_APG40

Source Field

CGSTSTAT

Source Section

SS7SLMT1

CGSTSTAT_BSC_HSC7Link

Current link transmit congestion state

Data Source

BSC_IOG20_APG40

Source Field

CGSTSTAT

Source Section

SS7HSLMT1

CHOVERS

Number of occurrences of local automatic changeover

Data Source

BSC_IOG20_APG40

Source Field

CHOVERS

Source Section

C7SL1

CLUSTERCODE_BSC_SS7SLMT1

SS7 Link Cluster code

Data Source

BSC_IOG20_APG40

Source Field

CLUSTERCODE

Source Section

SS7SLMT1

CLUSTERCODE_BSC_SS7SLMT2

SS7 Link Cluster code

Data Source

BSC_IOG20_APG40

Source Field

CLUSTERCODE

Source Section

SS7SLMT2

CLUSTERCODE_BSC_SS7SLTRAFF

SS7 Link Cluster code

Data Source

BSC_IOG20_APG40

Source Field

CLUSTERCODE

Source Section

SS7SLTRAFF

CNRECONX_BSC_HSC7Link

Number of SSCOP Connection Reestablishment/Resynchronizations

Data Source

BSC_IOG20_APG40

Source Field

CNRECONX

Source Section

SS7HSLMT3

CNSUMERS_BSC_HSC7Link

A SSCOP Connection sum of errors counter.That is the sum of CDISCONX and INITFLRS

Data Source

BSC_IOG20_APG40

Source Field

CNSUMERS

Source Section

SS7HSLMT3

CONCNT1

Number of occurrences of SL congestion indications level 1

Data Source

BSC_IOG20_APG40

Source Field

CONCNT1

Source Section

C7SL2

CONCNT2

Number of occurrences of SL congestion indications level 2

Data Source

BSC_IOG20_APG40

Source Field

CONCNT2

Source Section

C7SL2

CONCNT3

Number of occurrences of SL congestion indications level 3

Data Source

BSC_IOG20_APG40

Source Field

CONCNT3

Source Section

C7SL2

CONDUR1

Cumulative duration of SL congestion level 1 in seconds

Data Source

BSC_IOG20_APG40

Source Field

CONDUR1

Source Section

C7SL2

CONDUR2

Cumulative duration of SL congestion level 2 in seconds

Data Source

BSC_IOG20_APG40

Source Field

CONDUR2

Source Section

C7SL2

CONDUR3

Cumulative duration of SL congestion level 3 in seconds

Data Source

BSC_IOG20_APG40

Source Field

CONDUR3

Source Section

C7SL2

CONSTOP1

Number of indications of stop of SL congestion level 1

Data Source

BSC_IOG20_APG40

Source Field

CONSTOP1

Source Section

C7SL2

CONSTOP2

Number of indications of stop of SL congestion level 2

Data Source

BSC_IOG20_APG40

Source Field

CONSTOP2

Source Section

C7SL2

CONSTOP3

Number of indications of stop of SL congestion level 3

Data Source

BSC_IOG20_APG40

Source Field

CONSTOP3

Source Section

C7SL2

DATALOSTFLAG_SPDL

Lost data flag

Data Source

BSC_IOG20_APG40

Source Field

DATALOSTFLAG

Source Section

SPDL

DCLRFAIL_BSC_C7Link

Indication of Link Declared Failure State

Data Source

BSC_IOG20_APG40

Source Field

DCLRFAIL

Source Section

SS7SLMT1

DCLRFAIL_BSC_HSC7Link

Indication of link declared failure state

Data Source

BSC_IOG20_APG40

Source Field

DCLRFAIL

Source Section

SS7HSLMT1

DDCFLABN_BSC_C7Link

Duration of SL declared failures due to abnormal FIBR/BNSR in 10 sec. Units

Data Source

BSC_IOG20_APG40

Source Field

DDCFLABN

Source Section

SS7SLMT2

DDCFLHWP_BSC_C7Link

Duration of SL declared failures due to due to hardware problems in 10 sec. units

Data Source

BSC_IOG20_APG40

Source Field

DDCFLHWP

Source Section

SS7SLMT2

DDCFLHWP_BSC_HSC7Link

Duration of signalling link declared failures due to hardware problems in 10 sec units

Data Source

BSC_IOG20_APG40

Source Field

DDCFLHWP

Source Section

SS7HSLMT2

DDCFLXDA_BSC_C7Link

Duration of SL declared failures due to excessive delay of acknowledgement in 10 sec. Units

Data Source

BSC_IOG20_APG40

Source Field

DDCFLXDA

Source Section

SS7SLMT2

DDCFLXDA_BSC_HSC7Link

Duration of signalling link declared failures due to excessive delay of acknowledgement in 10 sec units

Data Source

BSC_IOG20_APG40

Source Field

DDCFLXDA

Source Section

SS7HSLMT2

DDCFLXDC_BSC_C7Link

Duration of SL declared failures due to excessive duration of congestion

Data Source

BSC_IOG20_APG40

Source Field

DDCFLXDC

Source Section

SS7SLMT2

DDCFLXDC_BSC_HSC7Link

Duration of signalling link declared failures due to excessive duration of congestion in 10 sec units

Data Source

BSC_IOG20_APG40

Source Field

DDCFLXDC

Source Section

SS7HSLMT2

DDCFLXER_BSC_C7Link

Duration of SL declared failures due to excessive error rate in10 sec. units

Data Source

BSC_IOG20_APG40

Source Field

DDCFLXER

Source Section

SS7SLMT2

DDCFLXER_BSC_HSC7Link

Duration of signalling link declared failures due to excessive error rate in 10 sec units

Data Source

BSC_IOG20_APG40

Source Field

DDCFLXER

Source Section

SS7HSLMT2

DISMSU1

Number of occurrences of MSUs discarded due to SL congestion level 1

Data Source

BSC_IOG20_APG40

Source Field

DISMSU1

Source Section

C7SL2

DISMSU2

Number of occurrences of MSUs discarded due to SL congestion level 2

Data Source

BSC_IOG20_APG40

Source Field

DISMSU2

Source Section

C7SL2

DISMSU3

Number of occurrences of MSUs discarded due to SL congestion level 3

Data Source

BSC_IOG20_APG40

Source Field

DISMSU3

Source Section

C7SL2

DRBSYDCL_BSC_C7Link

Duration of link busy status declared by near-end signaling terminal in 50 ms. units

Data Source

BSC_IOG20_APG40

Source Field

DRBSYDCL

Source Section

SS7SLMT1

DRBSYDCL_BSC_HSC7Link

Duration of link busy status declared by near-end signalling terminal in 50 ms units

Data Source

BSC_IOG20_APG40

Source Field

DRBSYDCL

Source Section

SS7HSLMT1

DRBSYRCD_BSC_C7Link

Duration of busy-link status unit received from far-end in 50 ms. units

Data Source

BSC_IOG20_APG40

Source Field

DRBSYRCD

Source Section

SS7SLMT1

DRDCLFLR_BSC_C7Link

Duration of SL declared failures, - All types in 10 sec. Units

Data Source

BSC_IOG20_APG40

Source Field

DRDCLFLR

Source Section

SS7SLMT2

DRDCLFLR_BSC_HSC7Link

Duration of signalling link declared failures, all types, in 10 sec units

Data Source

BSC_IOG20_APG40

Source Field

DRDCLFLR

Source Section

SS7HSLMT2

DRFEPRO_BSC_C7Link

Duration of far-end processor outage in 10 sec. units

Data Source

BSC_IOG20_APG40

Source Field

DRFEPRO

Source Section

SS7SLMT1

DRFEPRO_BSC_HSC7Link

Duration of Far-end Processor Outage in 10 second units

Data Source

BSC_IOG20_APG40

Source Field

DRFEPRO

Source Section

SS7HSLMT1

DRLCLPRO_BSC_C7Link

Duration of near-end processor outage in 10 sec. units

Data Source

BSC_IOG20_APG40

Source Field

DRLCLPRO

Source Section

SS7SLMT2

DRLCLPRO_BSC_HSC7Link

Duration of near-end processor outage in 10 second units

Data Source

BSC_IOG20_APG40

Source Field

DRLCLPRO

Source Section

SS7HSLMT2

DRLKFAIL_BSC_C7Link

Duration of SL failures (declared and undeclared) in 10 sec. units.

Data Source

BSC_IOG20_APG40

Source Field

DRLKFAIL

Source Section

SS7SLMT2

DRLKINHB_BSC_C7Link

Duration of signalling link management inhibits in 10 sec. units

Data Source

BSC_IOG20_APG40

Source Field

DRLKINHB

Source Section

SS7SLMT2

DRLKINHB_BSC_HSC7Link

Duration of signalling link management inhibits in 10 sec units

Data Source

BSC_IOG20_APG40

Source Field

DRLKINHB

Source Section

SS7HSLMT2

DRNOCRED_BSC_HSC7Link

Cumulative duration of time in seconds

Data Source

BSC_IOG20_APG40

Source Field

DRNOCRED

Source Section

SS7HSLMT3

ECCNGLV1_BSC_C7Link

Number of times SL enters level 1 congestion state

Data Source

BSC_IOG20_APG40

Source Field

ECCNGLV1

Source Section

SS7SLMT1

ECCNGLV1_BSC_HSC7Link

Number of times a signalling link enters level 1 congestion state

Data Source

BSC_IOG20_APG40

Source Field

ECCNGLV1

Source Section

SS7HSLMT1

ECCNGLV2_BSC_C7Link

Number of times SL enters level 2 congestion state

Data Source

BSC_IOG20_APG40

Source Field

ECCNGLV2

Source Section

SS7SLMT1

ECCNGLV2_BSC_HSC7Link

Number of times a signalling link enters level 2 congestion state

Data Source

BSC_IOG20_APG40

Source Field

ECCNGLV2

Source Section

SS7HSLMT1

ECCNGLV3_BSC_C7Link

Number of times SL enters level 3 congestion state

Data Source

BSC_IOG20_APG40

Source Field

ECCNGLV3

Source Section

SS7SLMT1

ECCNGLV3_BSC_HSC7Link

Number of times a signalling link enters level 3 congestion state

Data Source

BSC_IOG20_APG40

Source Field

ECCNGLV3

Source Section

SS7HSLMT1

ERRSEC_BSC_C7Link

Number of errored seconds

Data Source

BSC_IOG20_APG40

Source Field

ERRSEC

Source Section

SS7SLTRAFF

ERRSEC_BSC_HSC7Link

Number of errored seconds for SAAL, ATM and Physical layers

Data Source

BSC_IOG20_APG40

Source Field

ERRSEC

Source Section

SS7HSLTRAF

FARMGINH_BSC_C7Link

Number of far-end management inhibits

Data Source

BSC_IOG20_APG40

Source Field

FARMGINH

Source Section

SS7SLMT2

FARMGINH_BSC_HSC7Link

Number of far-end management inhibits

Data Source

BSC_IOG20_APG40

Source Field

FARMGINH

Source Section

SS7HSLMT2

HDRDSCDS_BSC_HSC7Link

Number of incoming ATM cells discarded due to protocol (ATM-layer Header) errors

Data Source

BSC_IOG20_APG40

Source Field

HDRDSCDS

Source Section

SS7HSLMT3

HECDSCDS_BSC_HSC7Link

Number of incoming ATM cells discarded due to Header Error Control (HEC) violations

Data Source

BSC_IOG20_APG40

Source Field

HECDSCDS

Source Section

SS7HSLMT3

HSLDISMSU1

Number of messages discarded due to SL congestion on level 1

Data Source

BSC_IOG20_APG40

Source Field

HSLDISMSU1

Source Section

HS7SL1

HSLDISMSU2

Number of messages discarded due toSL congestion on level 2

Data Source

BSC_IOG20_APG40

Source Field

HSLDISMSU2

Source Section

HS7SL1

HSLDISMSU3

Number of messages discarded due toSL congestion on level 3

Data Source

BSC_IOG20_APG40

Source Field

HSLDISMSU3

Source Section

HS7SL1

HSLHDRDSCDS

Number of cells discarded due to protocol (ATM Layer Header) errors

Data Source

BSC_IOG20_APG40

Source Field

HSLHDRDSCDS

Source Section

HS7SL1

HSLHECDSCDS

Number of cells discarded due to header error control violations

Data Source

BSC_IOG20_APG40

Source Field

HSLHECDSCDS

Source Section

HS7SL1

HSLINCCELLS

Number of incoming network data collection valid (occupied) ATM cells

Data Source

BSC_IOG20_APG40

Source Field

HSLINCCELLS

Source Section

HS7SL1

HSLLOFMSU1

Number of congestion events resulting in loss of messages at level 1

Data Source

BSC_IOG20_APG40

Source Field

HSLLOFMSU1

Source Section

HS7SL1

HSLLOFMSU2

Number of congestion events resulting in loss of messages at level 2

Data Source

BSC_IOG20_APG40

Source Field

HSLLOFMSU2

Source Section

HS7SL1

HSLLOFMSU3

Number of congestion events resulting in loss of messages at level 3

Data Source

BSC_IOG20_APG40

Source Field

HSLLOFMSU3

Source Section

HS7SL1

HSLNMSURE

Number of messages received

Data Source

BSC_IOG20_APG40

Source Field

HSLNMSURE

Source Section

HS7SL1

HSLNMSUTR

Number of messages transmitted(not including retransmitted messages)

Data Source

BSC_IOG20_APG40

Source Field

HSLNMSUTR

Source Section

HS7SL1

HSLNNAREC

Number of negative acknowledgments received to messages sent. That is the number of MAA-ERROR.indicationswith error type sequenced data loss(outgoing message error rate)

Data Source

BSC_IOG20_APG40

Source Field

HSLNNAREC

Source Section

HS7SL1

HSLNSUERR

Number of messages received in error (incoming message error rate)

Data Source

BSC_IOG20_APG40

Source Field

HSLNSUERR

Source Section

HS7SL1

HSLOCDANMLS

Number of out of cell delineation anomalies

Data Source

BSC_IOG20_APG40

Source Field

HSLOCDANMLS

Source Section

HS7SL1

HSLOUTCELLS

Number of outgoing network data collection valid ATM cells

Data Source

BSC_IOG20_APG40

Source Field

HSLOUTCELLS

Source Section

HS7SL1

HSLTTLRBC

Duration of local busy in 100 ms units

Data Source

BSC_IOG20_APG40

Source Field

HSLTTLRBC

Source Section

HS7SL1

ICUICELS_BSC_HSC7Link

Number of incoming (received) ATM user-information (UI) cells

Data Source

BSC_IOG20_APG40

Source Field

ICUICELS

Source Section

SS7HSLTRAF

ILS_BSC_SS7SLMT1

Link Set Pointer

Data Source

BSC_IOG20_APG40

Source Field

ILS

Source Section

SS7SLMT1

ILS_BSC_SS7SLTRAFF

Link Set Pointer

Data Source

BSC_IOG20_APG40

Source Field

ILS

Source Section

SS7SLTRAFF

INCCELLS_BSC_HSC7Link

Number of incoming (received) NDC-valid ATM cells

Data Source

BSC_IOG20_APG40

Source Field

INCCELLS

Source Section

SS7HSLTRAF

INITFLRS_BSC_HSC7Link

Number of SSCOP Connection Initiation Failures

Data Source

BSC_IOG20_APG40

Source Field

INITFLRS

Source Section

SS7HSLMT3

INVLPDUS_BSC_HSC7Link

Number of invalid SSCOP PDUs received

Data Source

BSC_IOG20_APG40

Source Field

INVLPDUS

Source Section

SS7HSLMT3

LACKCRED_BSC_HSC7Link

Number of times that SSCOP had PDUs to send to its peer but could not do so because it was not given credit by the far end

Data Source

BSC_IOG20_APG40

Source Field

LACKCRED

Source Section

SS7HSLMT3

LBUSDUR

Duration of local busy in 100ms units

Data Source

BSC_IOG20_APG40

Source Field

LBUSDUR

Source Section

C7SL1

LINHNO

Number of occurrences of local management inhibit

Data Source

BSC_IOG20_APG40

Source Field

LINHNO

Source Section

C7SL1

LKMTCST_BSC_C7Link

Maintenance state (same as 'signalling link service status')

Data Source

BSC_IOG20_APG40

Source Field

LKMTCST

Source Section

SS7SLMT1

LKMTCST_BSC_HSC7Link

Maintenance state (same as 'signalling link service status')

Data Source

BSC_IOG20_APG40

Source Field

LKMTCST

Source Section

SS7HSLMT1

LOCINHDUR

Duration of SL inhibition due to local management action in seconds

Data Source

BSC_IOG20_APG40

Source Field

LOCINHDUR

Source Section

C7SL1

LOFMSU1

Number of congestion events resulting in loss of MSUs level 1

Data Source

BSC_IOG20_APG40

Source Field

LOFMSU1

Source Section

C7SL2

LOFMSU2

Number of congestion events resulting in loss of MSUs level 2

Data Source

BSC_IOG20_APG40

Source Field

LOFMSU2

Source Section

C7SL2

LOFMSU3

Number of congestion events resulting in loss of MSUs level 3

Data Source

BSC_IOG20_APG40

Source Field

LOFMSU3

Source Section

C7SL2

LS10SCAN_BSC_C7Link

Number of 10 second scans in S7LS

Data Source

BSC_IOG20_APG40

Source Field

LS10SCAN

Source Section

SS7SLMT2

LS10SCAN_BSC_HSC7Link

Number of 10 sec scans in S7LS

Data Source

BSC_IOG20_APG40

Source Field

LS10SCAN

Source Section

SS7HSLMT2

MCHGOVRS_BSC_C7Link

Number of near-end manual changeovers 17 Value of hourly link maintenance threshold

Data Source

BSC_IOG20_APG40

Source Field

MCHGOVRS

Source Section

SS7SLMT2

MCHGOVRS_BSC_HSC7Link

Number of near-end manual changeovers

Data Source

BSC_IOG20_APG40

Source Field

MCHGOVRS

Source Section

SS7HSLMT2

MEMBERCODE_BSC_SS7SLMT1

SS7 Cluster Member Code

Data Source

BSC_IOG20_APG40

Source Field

MEMBERCODE

Source Section

SS7SLMT1

MEMBERCODE_BSC_SS7SLMT2

SS7 Cluster Member Code

Data Source

BSC_IOG20_APG40

Source Field

MEMBERCODE

Source Section

SS7SLMT2

MEMBERCODE_BSC_SS7SLTRAFF

SS7 Cluster Member Code

Data Source

BSC_IOG20_APG40

Source Field

MEMBERCODE

Source Section

SS7SLTRAFF

MGMTINHB_BSC_C7Link

Indication of Link Management-Inhibit

Data Source

BSC_IOG20_APG40

Source Field

MGMTINHB

Source Section

SS7SLMT1

MGMTINHB_BSC_HSC7Link

Indication of link management-inhibit status

Data Source

BSC_IOG20_APG40

Source Field

MGMTINHB

Source Section

SS7HSLMT1

MOCTRGTT_BSC_HSC7Link

Number of MTP3 message octets associated with MTP3 messages received that required GTT

Data Source

BSC_IOG20_APG40

Source Field

MOCTRGTT

Source Section

SS7HSLTRAF

MSGDISC0_BSC_HSC7Link

Number of priority 0 MTP3 messages discarded due to signalling link congestion

Data Source

BSC_IOG20_APG40

Source Field

MSGDISC0

Source Section

SS7HSLMT1

MSGDISC1_BSC_HSC7Link

Number of priority 1 MTP3 messages discarded due to signalling link congestion

Data Source

BSC_IOG20_APG40

Source Field

MSGDISC1

Source Section

SS7HSLMT1

MSGDISC2_BSC_HSC7Link

Number of priority 2 MTP3 messages discarded due to signalling link congestion

Data Source

BSC_IOG20_APG40

Source Field

MSGDISC2

Source Section

SS7HSLMT1

MSGDISC3_BSC_HSC7Link

Number of priority 3 MTP3 messages discarded due to signalling link congestion

Data Source

BSC_IOG20_APG40

Source Field

MSGDISC3

Source Section

SS7HSLMT1

MSGDISCH_BSC_HSC7Link

Number of MTP3 messages discarded due to message length longer than 272 octets

Data Source

BSC_IOG20_APG40

Source Field

MSGDISCH

Source Section

SS7HSLMT1

MSGSRCVD_BSC_HSC7Link

Number of MTP3 messages received

Data Source

BSC_IOG20_APG40

Source Field

MSGSRCVD

Source Section

SS7HSLTRAF

MSGSRGTT_BSC_HSC7Link

Number of MTP3 messages received requiring Global Title Translation (GTT)

Data Source

BSC_IOG20_APG40

Source Field

MSGSRGTT

Source Section

SS7HSLTRAF

MSGSTRAN_BSC_HSC7Link

Number of MTP3 messages transmitted

Data Source

BSC_IOG20_APG40

Source Field

MSGSTRAN

Source Section

SS7HSLTRAF

MSUDISC0_BSC_C7Link

Number of priority 0 MSUs discarded due to SL congestion

Data Source

BSC_IOG20_APG40

Source Field

MSUDISC0

Source Section

SS7SLMT1

MSUDISC1_BSC_C7Link

Number of priority 1 MSUs discarded due to SL congestion

Data Source

BSC_IOG20_APG40

Source Field

MSUDISC1

Source Section

SS7SLMT1

MSUDISC2_BSC_C7Link

Number of priority 2 MSUs discarded due to SL congestion

Data Source

BSC_IOG20_APG40

Source Field

MSUDISC2

Source Section

SS7SLMT1

MSUDISC3_BSC_C7Link

Number of priority 3 MSUs discarded due to SL congestion

Data Source

BSC_IOG20_APG40

Source Field

MSUDISC3

Source Section

SS7SLMT1

MSURCERR_BSC_C7Link

Number of MSUs received in error 10 Value of hourly link maintenance

Data Source

BSC_IOG20_APG40

Source Field

MSURCERR

Source Section

SS7SLTRAFF

MSURECD_BSC_C7Link

Number of MSU's received 4 Number of SIF and SIO octets received

Data Source

BSC_IOG20_APG40

Source Field

MSURECD

Source Section

SS7SLTRAFF

MSURETRN_BSC_C7Link

Number of MSUs retransmitted 8 Value of hourly link maintenance

Data Source

BSC_IOG20_APG40

Source Field

MSURETRN

Source Section

SS7SLTRAFF

MSUSRGTT_BSC_C7Link

MSUs received requiring GTT

Data Source

BSC_IOG20_APG40

Source Field

MSUSRGTT

Source Section

SS7SLTRAFF

MSUTRAN_BSC_C7Link

Number of MSU's transmitted, (retransmission not included)

Data Source

BSC_IOG20_APG40

Source Field

MSUTRAN

Source Section

SS7SLTRAFF

MTCEUSG_BSC_C7Link

Link maintenance usage in 10 sec. units

Data Source

BSC_IOG20_APG40

Source Field

MTCEUSG

Source Section

SS7SLMT1

MTCEUSG_BSC_HSC7Link

Link maintenance usage in 10 second units

Data Source

BSC_IOG20_APG40

Source Field

MTCEUSG

Source Section

SS7HSLMT1

N10SCAN_BSC_C7Link

Number of ten second scannings

Data Source

BSC_IOG20_APG40

Source Field

N10SCAN

Source Section

SS7SLMT1

N10SCAN_BSC_HSC7Link

Number of 10 sec scans.

Data Source

BSC_IOG20_APG40

Source Field

N10SCAN

Source Section

SS7HSLMT1

NDCFLABN_BSC_C7Link

Number of SL declared failures abnormal FIBR/BNSR

Data Source

BSC_IOG20_APG40

Source Field

NDCFLABN

Source Section

SS7SLMT2

NDCFLHWP_BSC_C7Link

Number of SL declared failures due to hardware problems

Data Source

BSC_IOG20_APG40

Source Field

NDCFLHWP

Source Section

SS7SLMT2

NDCFLHWP_BSC_HSC7Link

Number of signalling link declared failures due to hardware problems

Data Source

BSC_IOG20_APG40

Source Field

NDCFLHWP

Source Section

SS7HSLMT2

NDCFLXDA_BSC_C7Link

Number of SL declared failures due to excessive delay of acknowledgement

Data Source

BSC_IOG20_APG40

Source Field

NDCFLXDA

Source Section

SS7SLMT2

NDCFLXDA_BSC_HSC7Link

Number of signalling link declared failures due to excessive delay of acknowledgement

Data Source

BSC_IOG20_APG40

Source Field

NDCFLXDA

Source Section

SS7HSLMT2

NDCFLXDC_BSC_C7Link

Number of SL declared failures due to due to excessive duration of congestion

Data Source

BSC_IOG20_APG40

Source Field

NDCFLXDC

Source Section

SS7SLMT2

NDCFLXDC_BSC_HSC7Link

Number of signalling link declared failures due to excessive duration of congestion

Data Source

BSC_IOG20_APG40

Source Field

NDCFLXDC

Source Section

SS7HSLMT2

NDCFLXER_BSC_C7Link

Number of SL declared failures due to excessive error rate

Data Source

BSC_IOG20_APG40

Source Field

NDCFLXER

Source Section

SS7SLMT2

NDCFLXER_BSC_HSC7Link

Number of signalling link declared failures due to excessive error rate

Data Source

BSC_IOG20_APG40

Source Field

NDCFLXER

Source Section

SS7HSLMT2

NEARMGIH_BSC_C7Link

Number of near-end management inhibits

Data Source

BSC_IOG20_APG40

Source Field

NEARMGIH

Source Section

SS7SLMT2

NEARMGIH_BSC_HSC7Link

Number of near-end management inhibits

Data Source

BSC_IOG20_APG40

Source Field

NEARMGIH

Source Section

SS7HSLMT2

NEGACKS_BSC_C7Link

Number of negative acknowledgments received

Data Source

BSC_IOG20_APG40

Source Field

NEGACKS

Source Section

SS7SLTRAFF

NMDCLFLR_BSC_C7Link

Number of SL declared failures,- All types

Data Source

BSC_IOG20_APG40

Source Field

NMDCLFLR

Source Section

SS7SLMT2

NMDCLFLR_BSC_HSC7Link

Number of signalling link declared failures, all types

Data Source

BSC_IOG20_APG40

Source Field

NMDCLFLR

Source Section

SS7HSLMT2

NMSURE

Number of MSU's received

Data Source

BSC_IOG20_APG40

Source Field

NMSURE

Source Section

C7SL1

NMSUTR

Number of MSU's transmitted

Data Source

BSC_IOG20_APG40

Source Field

NMSUTR

Source Section

C7SL1

NNAREC

Number of negative acknowledgements received

Data Source

BSC_IOG20_APG40

Source Field

NNAREC

Source Section

C7SL1

NORTRO

Number of octets retransmitted

Data Source

BSC_IOG20_APG40

Source Field

NORTRO

Source Section

C7SL1

NSIFSRE

Number of SIF and SIO octets received

Data Source

BSC_IOG20_APG40

Source Field

NSIFSRE

Source Section

C7SL1

NSIFTR

Number of SIF and SIO octets transmitted

Data Source

BSC_IOG20_APG40

Source Field

NSIFTR

Source Section

C7SL1

NSLALPRFL

Number of occurrences of SL Alignment or Proving failure.

Data Source

BSC_IOG20_APG40

Source Field

NSLALPRFL

Source Section

C7SL1

NSUERR

Number of signal units in error

Data Source

BSC_IOG20_APG40

Source Field

NSUERR

Source Section

C7SL1

OCDANMLS_BSC_HSC7Link

Number of time of Out of Cell Delineation (OCD) anomalies

Data Source

BSC_IOG20_APG40

Source Field

OCDANMLS

Source Section

SS7HSLMT3

OCTRCGTT_BSC_C7Link

MSU octets received for messages requiring GTT

Data Source

BSC_IOG20_APG40

Source Field

OCTRCGTT

Source Section

SS7SLTRAFF

OGUICELS_BSC_HSC7Link

Number of outgoing (transmitted) ATM user-information (UI) cells

Data Source

BSC_IOG20_APG40

Source Field

OGUICELS

Source Section

SS7HSLTRAF

OUTCELLS_BSC_HSC7Link

Number of outgoing (transmitted) NDC-valid ATM cells

Data Source

BSC_IOG20_APG40

Source Field

OUTCELLS

Source Section

SS7HSLTRAF

PDULSTER_BSC_HSC7Link

Number of SSCOP PDUs with List Element Errors

Data Source

BSC_IOG20_APG40

Source Field

PDULSTER

Source Section

SS7HSLMT3

PDUOCTRC_BSC_HSC7Link

Number of octets associated with SSCOP PDUs of all types received

Data Source

BSC_IOG20_APG40

Source Field

PDUOCTRC

Source Section

SS7HSLTRAF

PDUOCTTR_BSC_HSC7Link

Number of octets associated with SSCOP PDUs of all types transmitted

Data Source

BSC_IOG20_APG40

Source Field

PDUOCTTR

Source Section

SS7HSLTRAF

PDUSRCVD_BSC_HSC7Link

Number of SSCOP PDUs of all types received

Data Source

BSC_IOG20_APG40

Source Field

PDUSRCVD

Source Section

SS7HSLTRAF

PDUSTRAN_BSC_HSC7Link

Number of SSCOP PDUs of all types transmitted

Data Source

BSC_IOG20_APG40

Source Field

PDUSTRAN

Source Section

SS7HSLTRAF

PDUSUMER_BSC_HSC7Link

A SSCOP Errored PDUs sum of errors counter. That is a sum of UNEXPDUS, INVLPDUS and PDULSTER

Data Source

BSC_IOG20_APG40

Source Field

PDUSUMER

Source Section

SS7HSLMT3

PERLEN

Period Length

PROSTAT_BSC_C7Link

Indication of processor outage status units being received

Data Source

BSC_IOG20_APG40

Source Field

PROSTAT

Source Section

SS7SLMT1

PROTRAN_BSC_C7Link

Indication of processor outage status units being transmitted

Data Source

BSC_IOG20_APG40

Source Field

PROTRAN

Source Section

SS7SLMT2

RECVDOCT_BSC_C7Link

Number of SIF and SIO octets received 5 Number of SIF and SIO octets transmitted

Data Source

BSC_IOG20_APG40

Source Field

RECVDOCT

Source Section

SS7SLTRAFF

RECVDOCT_BSC_HSC7Link

Number of SIF and SIO octets received

Data Source

BSC_IOG20_APG40

Source Field

RECVDOCT

Source Section

SS7HSLTRAF

REMINHDUR

Duration of SL inhibition due to remote management action in seconds

Data Source

BSC_IOG20_APG40

Source Field

REMINHDUR

Source Section

C7SL1

RETRNOCT_BSC_C7Link

Number of SIF, SIO, LI, FSN, and BSN octets retransmitted

Data Source

BSC_IOG20_APG40

Source Field

RETRNOCT

Source Section

SS7SLTRAFF

RETRP

Number of retransmitted information frames

Data Source

BSC_IOG20_APG40

Source Field

RETRP

Source Section

SPDL

RINHNO

Number of occurrences of local management uninhibit

Data Source

BSC_IOG20_APG40

Source Field

RINHNO

Source Section

C7SL1

SAALINSV_BSC_HSC7Link

Total time in seconds that the link is regarded in-service (at level 2) by SAAL

Data Source

BSC_IOG20_APG40

Source Field

SAALINSV

Source Section

SS7HSLMT3

SAMPCNT_BSC_C7Link

Number of samples from signalling terminal

Data Source

BSC_IOG20_APG40

Source Field

SAMPCNT

Source Section

SS7SLMT1

SAMPCNT_BSC_HSC7Link

Number of samples from signalling terminal

Data Source

BSC_IOG20_APG40

Source Field

SAMPCNT

Source Section

SS7HSLMT1

SDOCTRCV_BSC_HSC7Link

Number of octets associated with SSCOP SD PDUs received

Data Source

BSC_IOG20_APG40

Source Field

SDOCTRCV

Source Section

SS7HSLTRAF

SDOCTRTR_BSC_HSC7Link

Number of octets associated with SSCOP SD PDUs retransmitted

Data Source

BSC_IOG20_APG40

Source Field

SDOCTRTR

Source Section

SS7HSLTRAF

SDOCTTRN_BSC_HSC7Link

Number of octets associated with SSCOP SD PDUs transmitted, including retransmissions

Data Source

BSC_IOG20_APG40

Source Field

SDOCTTRN

Source Section

SS7HSLTRAF

SDPDURCV_BSC_HSC7Link

Number of SSCOP SD PDUs received

Data Source

BSC_IOG20_APG40

Source Field

SDPDURCV

Source Section

SS7HSLTRAF

SDPDURRR_BSC_HSC7Link

Number of SSCOP SD PDU transmitted requiring retransmission because they were not acknowledged by the far-end's SSCOP peer

Data Source

BSC_IOG20_APG40

Source Field

SDPDURRR

Source Section

SS7HSLTRAF

SDPDURTR_BSC_HSC7Link

Number of SSCOP SD PDUs retransmitted

Data Source

BSC_IOG20_APG40

Source Field

SDPDURTR

Source Section

SS7HSLTRAF

SDPDUTRN_BSC_HSC7Link

Number of SSCOP Sequence Data (SD) PDUs transmitted, including retransmissions

Data Source

BSC_IOG20_APG40

Source Field

SDPDUTRN

Source Section

SS7HSLTRAF

SL10SCAN_BSC_C7Link

Number of 10 second scans in S7SL

Data Source

BSC_IOG20_APG40

Source Field

SL10SCAN

Source Section

SS7SLMT2

SL10SCAN_BSC_HSC7Link

Number of 10 sec scans in S7SL

Data Source

BSC_IOG20_APG40

Source Field

SL10SCAN

Source Section

SS7HSLMT2

SLPARMGP_BSC_C7Link

Parameter group number for signalling link

Data Source

BSC_IOG20_APG40

Source Field

SLPARMGP

Source Section

SS7SLMT2

SLPARMGP_BSC_HSC7Link

Parameter group number for signalling link

Data Source

BSC_IOG20_APG40

Source Field

SLPARMGP

Source Section

SS7HSLMT2

SYS7IND

INDICATOR FOR C7 OR J7 MTP

Data Source

BSC_IOG20_APG40

Source Field

SYS7IND

Source Section

C7SL2

SYS7IND_C7SL1

Indicator

Data Source

BSC_IOG20_APG40

Source Field

SYS7IND

Source Section

C7SL1

TDCNGLV1_BSC_C7Link

Total duration of level 1 congestion state in 10 sec. units

Data Source

BSC_IOG20_APG40

Source Field

TDCNGLV1

Source Section

SS7SLMT1

TDCNGLV1_BSC_HSC7Link

Total duration of level 1 congestion state in 10 sec units

Data Source

BSC_IOG20_APG40

Source Field

TDCNGLV1

Source Section

SS7HSLMT1

TDCNGLV2_BSC_C7Link

Total duration of level 2 congestion state in 10 sec. units

Data Source

BSC_IOG20_APG40

Source Field

TDCNGLV2

Source Section

SS7SLMT1

TDCNGLV2_BSC_HSC7Link

Total duration of level 2 congestion state in 10 sec units

Data Source

BSC_IOG20_APG40

Source Field

TDCNGLV2

Source Section

SS7HSLMT1

TDCNGLV3_BSC_C7Link

Total duration of level 3 congestion state in 10 sec. units

Data Source

BSC_IOG20_APG40

Source Field

TDCNGLV3

Source Section

SS7SLMT1

TDCNGLV3_BSC_HSC7Link

Total duration of level 3 congestion state in 10 sec units

Data Source

BSC_IOG20_APG40

Source Field

TDCNGLV3

Source Section

SS7HSLMT1

THRACHOV_BSC_C7Link

Value of hourly link maintenance threshold for automatic changeovers

Data Source

BSC_IOG20_APG40

Source Field

THRACHOV

Source Section

SS7SLMT2

THRMSUER_BSC_C7Link

Value of hourly link maintenance threshold for MSUs received in error

Data Source

BSC_IOG20_APG40

Source Field

THRMSUER

Source Section

SS7SLTRAFF

THRNEGAK_BSC_C7Link

Value of hourly link maintenance threshold for negative acknowledgement received

Data Source

BSC_IOG20_APG40

Source Field

THRNEGAK

Source Section

SS7SLTRAFF

TLNKACTV_BSC_C7Link

Signalling link active time in 10 sec. units

Data Source

BSC_IOG20_APG40

Source Field

TLNKACTV

Source Section

SS7SLMT1

TLNKACTV_BSC_HSC7Link

Signalling link active time in 10 second units

Data Source

BSC_IOG20_APG40

Source Field

TLNKACTV

Source Section

SS7HSLMT1

TOTOCMSG_BSC_HSC7Link

Accumulated total of link transmission buffer occupancy in MTP3 messages

Data Source

BSC_IOG20_APG40

Source Field

TOTOCMSG

Source Section

SS7HSLMT1

TOTOCMSU_BSC_C7Link

Accumulated total of link transmission buffer occupancy in MSUs

Data Source

BSC_IOG20_APG40

Source Field

TOTOCMSU

Source Section

SS7SLMT1

TOTOCOCT_BSC_C7Link

Accumulated total of link transmission buffer occupancy in octets

Data Source

BSC_IOG20_APG40

Source Field

TOTOCOCT

Source Section

SS7SLMT1

TOTOCOCT_BSC_HSC7Link

Accumulated total of link transmission buffer occupancy in octets

Data Source

BSC_IOG20_APG40

Source Field

TOTOCOCT

Source Section

SS7HSLMT1

TOTPRIO0_BSC_C7Link

Accumulated total of link transmission buffer occupancy in priority 0 MSUs

Data Source

BSC_IOG20_APG40

Source Field

TOTPRIO0

Source Section

SS7SLMT1

TOTPRIO0_BSC_HSC7Link

Accumulated total of link transmission buffer occupancy in priority 0 MTP3 messages

Data Source

BSC_IOG20_APG40

Source Field

TOTPRIO0

Source Section

SS7HSLMT1

TOTPRIO1_BSC_C7Link

Accumulated total of link transmission buffer occupancy in priority 1 MSUs

Data Source

BSC_IOG20_APG40

Source Field

TOTPRIO1

Source Section

SS7SLMT1

TOTPRIO1_BSC_HSC7Link

Accumulated total of link transmission buffer occupancy in priority 1 MTP3 messages

Data Source

BSC_IOG20_APG40

Source Field

TOTPRIO1

Source Section

SS7HSLMT1

TOTPRIO2_BSC_C7Link

Accumulated total of link transmission buffer occupancy in priority 2 MSUs

Data Source

BSC_IOG20_APG40

Source Field

TOTPRIO2

Source Section

SS7SLMT1

TOTPRIO2_BSC_HSC7Link

Accumulated total of link transmission buffer occupancy in priority 2 MTP3 messages

Data Source

BSC_IOG20_APG40

Source Field

TOTPRIO2

Source Section

SS7HSLMT1

TOTPRIO3_BSC_C7Link

Accumulated total of link transmission buffer occupancy in priority 3 MSUs

Data Source

BSC_IOG20_APG40

Source Field

TOTPRIO3

Source Section

SS7SLMT1

TOTPRIO3_BSC_HSC7Link

Accumulated total of link transmission buffer occupancy in priority 3 MTP3 messages

Data Source

BSC_IOG20_APG40

Source Field

TOTPRIO3

Source Section

SS7HSLMT1

TOTTRP

Total number of transmitted information frames

Data Source

BSC_IOG20_APG40

Source Field

TOTTRP

Source Section

SPDL

TRANOCT_BSC_C7Link

Number of SIF and SIO octets transmitted 6 Number of SIF, SIO, LI, FSN, and

Data Source

BSC_IOG20_APG40

Source Field

TRANOCT

Source Section

SS7SLTRAFF

TRANOCT_BSC_HSC7Link

Number of SIF and SIO octets transmitted

Data Source

BSC_IOG20_APG40

Source Field

TRANOCT

Source Section

SS7HSLTRAF

UNAVAILDUR

Duration of SL unavailability (all reasons) in seconds

Data Source

BSC_IOG20_APG40

Source Field

UNAVAILDUR

Source Section

C7SL1

UNAVRBLDUR

Duration of SL unavailability due to remote processor outage in seconds

Data Source

BSC_IOG20_APG40

Source Field

UNAVRBLDUR

Source Section

C7SL1

UNAVSLFDUR

Duration of SL unavailability due to link failure in seconds

Data Source

BSC_IOG20_APG40

Source Field

UNAVSLFDUR

Source Section

C7SL1

UNEXPDUS_BSC_HSC7Link

Number of unexpected SSCOP PDUs received

Data Source

BSC_IOG20_APG40

Source Field

UNEXPDUS

Source Section

SS7HSLMT3

BSC_SS7LinkSet Primitive Calculations

The following is a list of primitive calculations for the BSC_SS7LinkSet entity.

C7_LSTL_AvgRX

Average C7 Link Received Traffic (Erlangs)

Calculation

```
mean(BSC_SS7Link, C7_SLTL_RX)
```

C7_LSTL_AvgTX

Average C7 Link Transmitted Traffic (Erlangs)

Calculation

```
mean(BSC_SS7Link, C7_SLTL_TX)
```

GRAPHmultiLineSeparator

Special Control Field for Multi-Line Graphs

Calculation

```
""
```

INTERVALS

Number of 60 minute intervals covered

Calculation

```
PERLEN / (1.0 * 60)
```

Link_Unavailable

Link UnAvailability in LinkSet

Calculation

```
protect(sum( BSC_SS7Link, UNAVAILDUR ) / NumLinks)
```

NUMDAYS

of days in Report

Calculation

```
DAYSINREPORT()
```

NUMHOURS

of hours in Summation Data

Calculation

NumLinks

Number of Links Per Linkset

Calculation

```
count(BSC_SS7Link)
```

PercentageLinkAvailability

Signalling Link Unavailability Duration

Calculation

```
mean(BSC_SS7Link,PercentageLinkAvailability)
```

PercentageLinksetInService

Percentage Linkset In Service

Calculation

```
(100 * (mean(BSC_SS7Link, nullValue(ASLDUR,(TLNKACTV_BSC_C7Link * 10))) /
(1.0 * (PERLEN * 60))))
```

RX_AvgLink

Total (RX) LinkSet Usage per Link

Calculation

```
C7_LSTL_AvgRX / ( 1.0 * NumLinks )
```

RX_MSUS

RX MSUS For all Links

Calculation

```
AGGR(BSC_SS7Link, NMSURE)
```

RX_Octets

RX SIF/SIO Octets for all Links

Calculation

```
AGGR(BSC_SS7Link, NSIFSRE)
```

TX_AvgLink

Total (TX) LinkSet Usage per Link

Calculation

```
C7_LSTL_AvgTX / ( 1.0 * NumLinks )
```

TX_MSUS

TX MSUS For all Links

Calculation

```
AGGR(BSC_SS7Link, NMSUTR)
```

TX_Octets

TX SIF/SIO Octets for all Links

Calculation

```
AGGR(BSC_SS7Link, NSIFTR)
```

VENDORTECH

Vendor Technology

Calculation

```
isNull( PERLEN ) ? nullString() : "EricssonGSM"
```

BSC_SS7LinkSet Peg Counts

The following is a list of peg counts for the BSC_SS7LinkSet entity.

ASPADUR_BSC

Duration of adjacent SP inaccessible in seconds

Data Source

BSC_IOG20_APG40

Source Field

ASPADUR

Source Section

C7ADJSLP

ASPINA_BSC

Number of occurrences of adjacent SP inaccessible

Data Source

BSC_IOG20_APG40

Source Field

ASPINA

Source Section

C7ADJSLP

AVLINKS_BSC_C7LinkSet

Number of currently available links (ACT)

Data Source

BSC_IOG20_APG40

Source Field

AVLINKS

Source Section

SS7LS

AVLINKS_SS7HSLS

Number of currently available links (ACT)

Data Source

BSC_IOG20_APG40

Source Field

AVLINKS

Source Section

SS7HSLS

BSS_RELEASE

Release

CLUSTERCODE_BSC_SS7LS

SS7 Link Cluster code

Data Source

BSC_IOG20_APG40

Source Field

CLUSTERCODE

Source Section

SS7LS

ICUICELS_SS7HSLS

Total number of incoming (received) ATM user information (UI) cells

Data Source

BSC_IOG20_APG40

Source Field

ICUICELS

Source Section

SS7HSLS

INCCELLS_SS7HSLS

Total number of incoming (received) NDC-valid ATM cells

Data Source

BSC_IOG20_APG40

Source Field

INCCELLS

Source Section

SS7HSLS

LINKS_BSC_C7LinkSet

Number of assigned SLs

Data Source

BSC_IOG20_APG40

Source Field

LINKS

Source Section

SS7LS

LINKS_SS7HSLS

Number of assigned signalling links

Data Source

BSC_IOG20_APG40

Source Field

LINKS

Source Section

SS7HSLS

LSMTCST_BSC_C7LinkSet

Maintenance state (same as 'link set service status')

Data Source

BSC_IOG20_APG40

Source Field

LSMTCST

Source Section

SS7LS

LSMTCST_SS7HSLS

Maintenance state (same as 'link set service status')

Data Source

BSC_IOG20_APG40

Source Field

LSMTCST

Source Section

SS7HSLS

MEMBERCODE_BSC_SS7LS

SS7 Cluster Member Code

Data Source

BSC_IOG20_APG40

Source Field

MEMBERCODE

Source Section

SS7LS

MSGSRCVD_SS7HSLS

Number of MTP3 messages received

Data Source

BSC_IOG20_APG40

Source Field

MSGSRCVD

Source Section

SS7HSLS

MSGSTRAN_SS7HSLS

Number of MTP3 messages transmitted, including those for which retransmissions of SSCOP SD PDUs

Data Source

BSC_IOG20_APG40

Source Field

MSGSTRAN

Source Section

SS7HSLS

MSURECD_BSC_C7LinkSet

Number of MSU's received

Data Source

BSC_IOG20_APG40

Source Field

MSURECD

Source Section

SS7LS

MSURETRN_BSC_C7LinkSet

Number of MSU's retransmitted

Data Source

BSC_IOG20_APG40

Source Field

MSURETRN

Source Section

SS7LS

MSUTRAN_BSC_C7LinkSet

Number of MSU's transmitted, (retransmission not included)

Data Source

BSC_IOG20_APG40

Source Field

MSUTRAN

Source Section

SS7LS

N10SCAN_BSC_C7LinkSet

Number of 10 sec. scans

Data Source

BSC_IOG20_APG40

Source Field

N10SCAN

Source Section

SS7LS

N10SCAN_SS7HSLS

Number of 10 sec scans

Data Source

BSC_IOG20_APG40

Source Field

N10SCAN

Source Section

SS7HSLS

OGUICELS_SS7HSLS

Total number of outgoing (transmitted) ATM user information (UI) cells

Data Source

BSC_IOG20_APG40

Source Field

OGUICELS

Source Section

SS7HSLS

OOSLINKS_BSC_C7LinkSet

Number of links in the Out-of-Service (OSS) Maintenance State

Data Source

BSC_IOG20_APG40

Source Field

OOSLINKS

Source Section

SS7LS

OOSLINKS_SS7HSLS

Number of links in the out-of-service (OOS) maintenance state

Data Source

BSC_IOG20_APG40

Source Field

OOSLINKS

Source Section

SS7HSLS

OUTCELLS_SS7HSLS

Total number of outgoing (transmitted) NDC-valid ATM cells

Data Source

BSC_IOG20_APG40

Source Field

OUTCELLS

Source Section

SS7HSLS

PDUOCTRC_SS7HSLS

Total number of SSCOP PDU octets received

Data Source

BSC_IOG20_APG40

Source Field

PDUOCTRC

Source Section

SS7HSLS

PDUOCTTR_SS7HSLS

Total number of SSCOP PDU octets transmitted

Data Source

BSC_IOG20_APG40

Source Field

PDUOCTTR

Source Section

SS7HSLS

PDUSRCVD_SS7HSLS

Total number of SSCOP PDUs received

Data Source

BSC_IOG20_APG40

Source Field

PDUSRCVD

Source Section

SS7HSLS

PDUSTRAN_SS7HSLS

Total number of SSCOP PDUs transmitted

Data Source

BSC_IOG20_APG40

Source Field

PDUSTRAN

Source Section

SS7HSLS

PERLEN

Period Length

RECVDOCT_BSC_C7LinkSet

Number of SIF and SIO octets received

Data Source

BSC_IOG20_APG40

Source Field

RECVDOCT

Source Section

SS7LS

RECVDOCT_SS7HSLS

Number of SIF and SIO octets for MTP3 messages received

Data Source

BSC_IOG20_APG40

Source Field

RECVDOCT

Source Section

SS7HSLS

RETRNOCT_BSC_C7LinkSet

Number of SIF, SIO, LI, FSN, and BSN octets retransmitted

Data Source

BSC_IOG20_APG40

Source Field

RETRNOCT

Source Section

SS7LS

SDOCTRCV_SS7HSLS

Number of SSCOP SD PDU octets received

Data Source

BSC_IOG20_APG40

Source Field

SDOCTRCV

Source Section

SS7HSLS

SDOCTRTR_SS7HSLS

Number of SSCOP SD PDU octets retransmitted

Data Source

BSC_IOG20_APG40

Source Field

SDOCTRTR

Source Section

SS7HSLS

SDOCTTRN_SS7HSLS

Number of SSCOP SD PDU octets transmitted, including retransmissions

Data Source

BSC_IOG20_APG40

Source Field

SDOCTTRN

Source Section

SS7HSLS

SDPDURCV_SS7HSLS

Number of SSCOP SD PDUs received

Data Source

BSC_IOG20_APG40

Source Field

SDPDURCV

Source Section

SS7HSLS

SDPDURTR_SS7HSLS

Number of SSCOP SD PDUs retransmitted

Data Source

BSC_IOG20_APG40

Source Field

SDPDURTR

Source Section

SS7HSLS

SDPDUTRN_SS7HSLS

Number of SSCOP SD PDUs transmitted, including retransmissions

Data Source

BSC_IOG20_APG40

Source Field

SDPDUTRN

Source Section

SS7HSLS

STUNADURAT_BSC

Duration of unavailability of signalling linkset in seconds

Data Source

BSC_IOG20_APG40

Source Field

STUNADURAT

Source Section

C7SLSET

SYS7IND_BSC_C7ADJSLP

Linkset state

Data Source

BSC_IOG20_APG40

Source Field

SYS7IND

Source Section

C7ADJSLP

SYS7IND_BSC_C7SLSET

Linkset state

Data Source

BSC_IOG20_APG40

Source Field

SYS7IND

Source Section

C7SLSET

TDLSINAC_BSC_C7LinkSet

Total duration of LS inactivity due to no links in LS are active in 10 sec. Units

Data Source

BSC_IOG20_APG40

Source Field

TDLSINAC

Source Section

SS7LS

TDLSINAC_SS7HSLS

Total duration of LS inactivity due to no links in LS are active in 10 sec units

Data Source

BSC_IOG20_APG40

Source Field

TDLSINAC

Source Section

SS7HSLS

TRANOCT_BSC_C7LinkSet

Number of SIF and SIO octets transmitted

Data Source

BSC_IOG20_APG40

Source Field

TRANOCT

Source Section

SS7LS

TRANOCT_SS7HSLS

Number of SIF and SIO octets for MTP3 messages transmitted

Data Source

BSC_IOG20_APG40

Source Field

TRANOCT

Source Section

SS7HSLS

UAVLINKS_BSC_C7LinkSet

Number of links in the Unavailable (UNAV) maintenance state

Data Source

BSC_IOG20_APG40

Source Field

UAVLINKS

Source Section

SS7LS

UAVLINKS_SS7HSLS

Number of links in the unavailable (UNAV) maintenance state

Data Source

BSC_IOG20_APG40

Source Field

UAVLINKS

Source Section

SS7HSLS

BSC_SS7RouteSet Primitive Calculations

The following is a list of primitive calculations for the BSC_SS7RouteSet entity.

GRAPHmultiLineSeparator

Special Control Field for Multi-Line Graphs

Calculation

```
""
```

INTERVALS

Number of 60 minute intervals covered

Calculation

```
PERLEN / (1.0 * 60)
```

LocalName

BSC_C7RouteSet Name

Calculation

```
LocalKey
```

NUMDAYS

of days in Report

Calculation

```
DAYSINREPORT()
```

NUMHOURS

of hours in Summation Data

Calculation

VENDORTECH

Vendor Technology

Calculation

```
isNull( PERLEN ) ? nullString() : "EricssonGSM"
```

BSC_SS7RouteSet Peg Counts

The following is a list of peg counts for the BSC_SS7RouteSet entity.

BSS_RELEASE

Release

PERLEN

Period Length

STINACNT_BSC

Number of occurrences of unavailability of route set to a given destination

Data Source

BSC_IOG20_APG40

Source Field

STINACNT

Source Section

C7RTSET

STINADURAT_BSC

Duration of unavailability of route set in seconds

Data Source

BSC_IOG20_APG40

Source Field

STINADURAT

Source Section

C7RTSET

SYS7IND_BSC_C7RTSET

Linkset state

Data Source

BSC_IOG20_APG40

Source Field

SYS7IND

Source Section

C7RTSET

BTSSite Primitive Calculations

The following is a list of primitive calculations for the BTSSite entity.

GRAPHmultiLineSeparator

Special Control Field for Multi-Line Graphs

Calculation

```
""
```

INTERVALS

Number of 60 minute intervals covered

Calculation

```
PERLEN / (1.0 * 60)
```

NUMDAYS

of days in Report

Calculation

```
DAYSINREPORT()
```

NUMHOURS

of hours in Summation Data

Calculation

VENDORTECH

Vendor Technology

Calculation

```
isNull( PERLEN ) ? nullString() : "EricssonGSM"
```

BTSSite Peg Counts

The following is a list of peg counts for the BTSSite entity.

BSS_RELEASE

Release

PERLEN

Period Length

Cell Primitive Calculations

The following is a list of primitive calculations for the Cell entity.

Active_PDCH

Average number of active PDCHs

Calculation

```
ALLPDCHACTACC / (1.0 * ALLPDCHSCAN)
```

Active_Preempted_PDCH

Preemption, Active PDCHs. No of preempted active PDCHs

Calculation

```
PREEMPTPDCH
```

Alloc_Failure%

Packet Channel Allocation Failure rate (%)

Calculation

```
100 * (PCHALLFAIL / PCHALLATT)
```

AvailableSDCCH

Average number of available sdcch's

Calculation

```
CAVAACC / (1.0 * CAVASCAN)
```

Correlation

Correlation co-efficient

Calculation

```
WM_FCAST_CORRELATION(instance_id)
```

CS12DLACK_and_RETRANSDL

Number of retransmitted radio messages, downlink (R9 + R10)

Calculation

```
nullValue(CS12DLACK, RETRANSDL)
```

CS12DLSCHED_and_RBCDL

Number of radio block messages, downlink (R9 + R10)

Calculation

```
nullValue(CS12DLSCHED, RBCDL)
```

CS12ULACK_and_RETRANSUL

Number of retransmitted radio messages, uplink (R9 + R10)

Calculation

```
nullValue(CS12ULACK, RETRANSUL)
```

CS12ULSCHED_and_RBCUL

Number of radio block messages, uplink (R9 + R10)

Calculation

```
nullValue(CS12ULSCHED, RBCUL)
```

DIMENSION

Dimensioning Parameter

Calculation

```
WM_FCAST_DIMENSION(instance_id, TimeAndElement.tstamp)
```

DropBadQualitys

Drop Bad Quality

Calculation

```
vsum(TFDISQAUL, TFDISQADL, TFDISQABL)
```

DropLow_ss

Drop Low SS

Calculation

```
vsum(TFDISSDL, TFDISSUL, TFDISSBL)
```

ExtraChan_Req

Extra Channels Required in Cell at the End of Forecast Period

Calculation

```
vsum( N3Days_FCAST_Ch, -1.0 * TNUCHCNT)
```

Forecast_Value1

Forecasted Value at N1 days ahead

Calculation

```
vsum(WM_FCAST_DIMENSION(instance_id, TimeAndElement.tstamp), GROWTH / 7 *
WM_FCAST_DAYS(1))
```

Forecast_Value2

Forecasted Value at N2 days ahead

Calculation

```
vsum(WM_FCAST_DIMENSION(instance_id, TimeAndElement.tstamp), GROWTH / 7 *
WM_FCAST_DAYS(2))
```

Forecast_Value3

Forecasted Value at N3 days ahead

Calculation

```
vsum(WM_FCAST_DIMENSION(instance_id, TimeAndElement.tstamp), GROWTH / 7 *
WM_FCAST_DAYS(3))
```

GRAPHmultiLineSeparator

Special Control Field for Multi-Line Graphs

Calculation

```
""
```

GROWTH

The Growth in Erlangs per Week for Linear Regression

Calculation

```
WM_FCAST_GROWTH(instance_id) * 3600 * 24 * 7
```

HO_CAUSE_BKC%

Percentage of Handovers due to better K-Cell

Calculation

```
sum(NBCell, HOTOLCL) * 100.0 / HO_CAUSEALL
```

HO_CAUSE_BKC%_RUP

Percentage of Handovers due to better K-Cell

Calculation

```
S_HOTOLCL * 100.0 / HO_CAUSEALL_RUP
```

HO_CAUSE_BLC%

Percentage of Handovers due to better L-Cell

Calculation

```
sum(NBCell, HOTOKCL) * 100.0 / HO_CAUSEALL
```

HO_CAUSE_BLC%_RUP

Percentage of Handovers due to better L-Cell

Calculation

```
S_HOTOKCL * 100.0 / HO_CAUSEALL_RUP
```

HO_CAUSEALL

Number of Handovers (All Causes)

Calculation

```
sum(NBCell, HO_CAUSEALL)
```

HO_CAUSEALL_RUP

Number of Handovers (All Causes)

Calculation

```
vsum(S_HOTOKCL, S_HOTOLCL, S_HODWNQA, S_HOUPLQA, S_HOEXCTA, S_HOATTLSS,
S_HOATTHSS)
```

HO_CAUSEDIST%

Percentage of Handovers due to Distance

Calculation

```
protect(sum(NBCell, HOEXCTA) * 100.0 / HO_CAUSEALL)
```

Updated: 2009-07-22

HO_CAUSEDIST%_RUP

Percentage of Handovers due to Distance

Calculation

```
(100.0 * S_HOEXCTA) / (1.0 * HO_CAUSEALL_RUP)
```

HO_CAUSEDWQL%

Percentage of Handovers due to Downlink Quality

Calculation

```
protect(sum(NBCell, HODWNQA) * 100.0 / HO_CAUSEALL)
```

HO_CAUSEDWQL%_RUP

Percentage of Handovers due to Downlink Quality

Calculation

```
(100.0 * S_HODWNQA) / (1.0 * HO_CAUSEALL_RUP)
```

HO_CAUSEHCS

Handovers due to HCS Processing

Calculation

```
AGGR(NBCell, HOTOHCS)
```

HO_CAUSEHCS_RUP

Handovers due to HCS Processing

Calculation

```
S_HOTOHCS
```

HO_CAUSEPWBGHI%

Percentage of Handovers due to Power Budget (High Signal Strength

Calculation

```
protect(sum(NBCell, HOATTHSS) * 100.0 / HO_CAUSEALL)
```

HO_CAUSEPWBGHI%_RUP

Percentage of Handovers due to Power Budget (High Signal Strength)

Calculation

```
(100.0 * S_HOATTHSS) / (1.0 * HO_CAUSEALL_RUP)
```

HO_CAUSEPWBGLO%

Percentage of Handovers due to Power Budget (Low Signal Strength)

Calculation

```
sum(NBCell, HOATTLSS) * 100.0 / HO_CAUSEALL
```

HO_CAUSEPWBGLO%_RUP

Percentage of Handovers due to Power Budget (Low Signal Strength)

Calculation

```
(S_HOATTLSS * 100.0) / HO_CAUSEALL_RUP
```

HO_CAUSEUPQL%

Percentage of Handovers due to Uplink Quality

Calculation

```
protect(sum(NBCell, HOUPLQA) * 100.0 / HO_CAUSEALL)
```

HO_CAUSEUPQL%_RUP

Percentage of Handovers due to Uplink Quality

Calculation

```
(100.0 * S_HOUPLQA) / (1.0 * HO_CAUSEALL_RUP)
```

HO_SUCHIHR%

Percentage of successful HO at High HO Rate

Calculation

```
AGGR(NBCell, HO_SUCHIHR%)
```

HO_SUCHIHR%_RUP

Percentage of successful HO at High HO Rate

Calculation

```
100.0 * SM_HOSUCHR / SM_HOATTHR
```

HOASBCL

Assign Handover Att to Better cell

Calculation

```
AGGR(NBCell, HOASBCL)
```

HOASBCL_RUP

Assign Handover Att to Better cell

Calculation

```
S_HOASBCL
```

HOASWCL

Assign Handover to Worse cell

Calculation

```
AGGR(NBCell, HOASWCL )
```

HOASWCL_RUP

Assign Handover to Worse cell

Calculation

```
S_HOASWCL
```

HOATTLS

Handover attempts due to cell load sharing.

Calculation

```
nullValue(HOATTLS_CELLEVENT, HOATTLS_CELEVENTH)
```

HODUPFT

Number of internal handover attempts during a predefined time (10 seconds)

Calculation

```
AGGR(NBCell, HODUPFT)
```

HODUPFT_RUP

Number of internal handover attempts during a predefined time (10 seconds)

Calculation

```
S_HODUPFT
```

HOE_LOST

MS lost at BSC external handover

Calculation

```
AGGR(NBCell, nullValue(HOE_LOST, 0))
```

HOE_LOST%

Percentage MS lost at BSC external handover

Calculation

```
AGGR(NBCell, nullValue(HOE_LOST%, 0))
```

HOE_LOST%_RUP

Percentage MS lost at BSC external handover

Calculation

```
(100.0 * protect(vsum(0.0, HOE_LOST_E_RUP))) / (1.0 * protect(vsum(0.0,
S_HOETOT)))
```

HOE_LOST_E_RUP

MS lost at BSC external handover)

Calculation

```
S_HOELOST
```

HOE_LOST_RUP

MS lost at BSC external handover

Calculation

```
HOE_LOST_E_RUP
```

HOE_SUC

BSC external handover successful attempts

Calculation

```
AGGR(NBCell, nullValue(HOE_SUC, 0))
```

HOE_SUC_RUP

BSC external handover successful attempts

Calculation

```
S_HOESUC
```

HOE_TOT

BSC external handover attempts

Calculation

```
AGGR(NBCell, nullValue(HOE_TOT, 0))
```

HOE_TOT_RUP

BSC external handover attempts

Calculation

```
S_HOETOT
```

HOI_LOST

MS lost at BSC internal handover

Calculation

```
AGGR(NBCell, nullValue(HOI_LOST, 0))
```

HOI_LOST%

Percentage MS lost at BSC internal handover

Calculation

```
AGGR(NBCell, nullValue(HOI_LOST%, 0))
```

HOI_LOST%_RUP

Percentage MS lost at BSC internal handover

Calculation

```
(100.0 * protect(vsum(0.0, S_HOILOSTPC2))) / (1.0 * protect(vsum(0.0,
S_HOILOSTPC)))
```

HOI_LOST_RUP

MS lost at BSC internal handover

Calculation

```
S_HOILOST
```

HOI_SUC

BSC internal handover successful attempts

Calculation

```
AGGR(NBCell, nullValue(HOI_SUC, 0))
```

HOI_SUC_RUP

BSC internal handover successful attempts

Calculation

```
S_HOISUC
```

HOI_TOT

BSC internal handover attempts

Calculation

```
AGGR(NBCell, nullValue(HOI_TOT, 0))
```

HOI_TOT_RUP

BSC internal handover attempts

Calculation

```
S_HOITOT
```

HOINBOCH

Number of unsuccessful intra-cell handover attempts, MS back on old channel

Calculation

```
nullValue(HOINBOCH_CELLEVENT, HOINBOCH_CELEVENTI)
```

HOINBQA

Number of intra-cell handover attempts at bad quality in both links

Calculation

```
nullValue(HOINBQA_CELLEVENT, HOINBQA_CELEVENTI)
```

HOINDQA

Number of intra-cell handover attempts due to bad downlink quality

Calculation

```
nullValue(HOINDQA_CELLEVENT, HOINDQA_CELEVENTI)
```

HOINSUC

Number of successful intra-cell handovers

Calculation

```
nullValue(HOINSUC_CELLEVENT, HOINSUC_CELEVENTI)
```

HOINUQA

Number of intra cell handover attempts at bad uplink quality

Calculation

```
nullValue(HOINUQA_CELLEVENT, HOINUQA_CELEVENTI)
```

HOSUCBCL

successful assignment HOs to better cell

Calculation

```
AGGR(NBCell, HOSUCBCL )
```

HOSUCBCL_RUP

successful assignment HOs to better cell

Calculation

```
S_HOSUCBCL
```

HOSUCLS

Successful handovers due to cell load sharing.

Calculation

```
nullValue(HOSUCLS_CELLEVENT, HOSUCLS_CELEVENTH)
```

HOSUCWCL

successful assignment HOs to worse cell

Calculation

```
AGGR(NBCell, HOSUCWCL)
```

HOSUCWCL_RUP

successful assignment HOs to worse cell

Calculation

```
S_HOSUCWCL
```

HOVERCNT

Handover Atts to CELL

Calculation

```
AGGR(NBCell, HOVERCNT)
```

HOVERCNT_E_RUP

Handover Atts to CELL

Calculation

```
S_HOVERCNT
```

HOVERCNT_RUP

Handover Atts to CELL

Calculation

```
HOVERCNT_E_RUP
```

IDLU_BAND1

Mean number of idle full rate UL TCH in interference band 1

Calculation

```
protect(ITFUSIB1 / (1.0 * NOACCUF ))
```

IDLU_BAND2

Mean number of idle full rate UL TCH in interference band 2

Calculation

```
protect(ITFUSIB2 / (1.0 * NOACCUF ))
```

IDLU_BAND3

Mean number of idle full rate UL TCH in interference band 3

Calculation

```
protect(ITFUSIB3 / (1.0 * NOACCUF ))
```

IDLU_BAND4

Mean number of idle full rate UL TCH in interference band 4

Calculation

```
protect(ITFUSIB4 / (1.0 * NOACCUF ))
```

IDLU_BAND5

Mean number of idle full rate UL TCH in interference band 5

Calculation

```
protect(ITFUSIB5 / (1.0 * NOACCUF ))
```

IHO_LOST

Total number of intra cell handover Lost

Calculation

```
vsum(HOINDQA, HOINUQA, HOINBQA, -1 * HOINSUC, -1 * HOINBOCH)
```

IHO_LOST%

Percentage of intra cell handover Lost

Calculation

```
nullValue(IHO_LOST * 100.0 / IHO_TOT, 0.0)
```

IHO_TOT

Total number of intra cell handover attempts

Calculation

```
vsum(HOINDQA, HOINUQA, HOINBQA)
```

INTERVALS

Number of 60 minute intervals covered

Calculation

```
PERLEN / (1.0 * 60)
```

MAXTSDL

The Accumulation of the maximum possible timeslots for all DL TBFs scanned.

Calculation

```
vsum(MAXGTSDL, MAXEGTSDL)
```

MC19ULACK_and_ERETRANSUL

Number of retransmitted RLC Data blocks, uplink for EGPRS (R9 + R10)

Calculation

```
nullValue(MC19ULACK, ERETRANSUL)
```

MC19ULSCHED_and_ERBCUL

Number of transmitted RLC Data blocks, uplink for EGPRS (R9 + R10)

Calculation

```
nullValue(MC19ULSCHED, ERBCUL)
```

N1Days_FCAST_Ch

Forecast Channels in N1 days time

Calculation

```
nullValue(circuits(TCH_GOS, Forecast_Value1),0)
```

N2Days_FCAST_Ch

Forecast Channels in N2 days time

Calculation

```
nullValue(circuits(TCH_GOS, Forecast_Value2),0)
```

N3Days_FCAST_Ch

Forecast Channels in N3 days time

Calculation

```
nullValue(circuits(TCH_GOS, Forecast_Value3),0)
```

NUMDAYS

of days in Report

Calculation

```
DAYSINREPORT()
```

NUMHOURS

of hours in Summation Data

Calculation

PABH3

Profile Average Busy Hour for 3 highest values

Calculation

```
WM_FCAST_PABH(instance_id, TimeAndElement.tstamp, 3)
```

PABH5

Profile Average Busy Hour for 5 highest values

Calculation

```
WM_FCAST_PABH(instance_id, TimeAndElement.tstamp, 5)
```

PDCH_Alloc

Average no of allocated PDCH

Calculation

```
ALLPDCHACC / (1.0 * ALLPDCHSCAN)
```

Peak_Usage

Peak Usage

Calculation

```
ALLPDCHPEAK
```

PercentageCallSetupSuccessRate

% Call set up Success Rate

Calculation

```
TFCASSALL * 100.0/ TASSALL
```

RA_ACC%

Number of accepted random accesses

Calculation

```
CNROCNT * 100.0 / RA_TOT
```

RA_ImmAsgnAtt

Immediate Assignment Attempts (Derived from RACH Counts)

Calculation

```
vsum(RAANPAG, RAEMCAL, RACALRE, RAOSREQ, RAOTHER, RAAPOPS, RAORSPE, RAOR-
DAT, RAAPAG1, RAAPAG2)
```

RA_TOT

Total random accesses

Calculation

```
vsum(CNROCNT, RAACCFA)
```

Req_Ch

No of Channels Required to carry the traffic given by Dimensioning parameter

Calculation

```
circuits(TCH_GOS, DIMENSION)
```

RL_EGPRS_Quality_UL%

Radio Link quality -EGPRS Retransmitted Radio Block Msg, UL (%)

Calculation

```
100 * (MC19ULACK / MC19ULSCHED)
```

RL_GPRS_Quality_DL%

Radio Link quality -GPRS Retransmitted Radio Block Messages, rate DL (%)

Calculation

```
100 * (CS12DLACK / CS12DLSCHED)
```

RL_GPRS_Quality_UL%

Radio Link quality -GPRS Retransmitted Radio Block Messages, rate UL (%)

Calculation

```
100 * (CS12DLACK / CS12ULSCHED)
```

Sample_Size

The number of Samples in the Regression

Calculation

```
WM_FCAST_SAMPLES(instance_id)
```

SD_CONG%

SDCCH congestion of total number of SDCCH seizure attempts

Calculation

```
CCONGS * 100.0 / CCALLS
```

SD_DR_ALL%

Dropped SDCCH connections

Calculation

```
CNDROP * 100.0 / CMSESTAB
```

SD_MHT

SDCCH Mean Holding Time (s)

Calculation

```
(CTRALACC * PERLEN * 60.0) / (CNSCAN * CMSESTAB)
```

SD_TRAFF_VOL

SDCCH traffic volume (Erlang hours)

Calculation

```
protect((CTRALACC / (1.0 * CNSCAN)) * PERLEN / 60.0)
```

SEG_LLC_PDU_Data_DL

Average LLC-PDU Data (kbit)

Calculation

```
DLBGEGDATA / (1.0 * DLBGEGPFC)
```

SEG_LLC_PDU_Data_DL1

Average LLC-PDU Data (kbit)

Calculation

```
DLTHP1EGDATA / (1.0 * DLTHP1EGPFC)
```

SEG_LLC_PDU_Data_DL2

Average LLC-PDU Data (kbit)

Calculation

```
DLTHP2EGDATA / (1.0 * DLTHP2EGPFC)
```

SEG_LLC_PDU_Data_DL3

Average LLC-PDU Data (kbit)

Calculation

```
DLTHP3EGDATA / (1.0 * DLTHP3EGPFC)
```

SEG_LLC_PDU_Data_UL

Average LLC-PDU Data (kbit)

Calculation

```
ULBGEGDATA / (1.0 * ULBGEGPFC)
```

SEG_LLC_PDU_Data_UL1

Average LLC-PDU Data (kbit)

Calculation

```
ULTHP1EGDATA / (1.0 * ULTHP1EGPFC)
```

SEG_LLC_PDU_Data_UL2

Average LLC-PDU Data (kbit)

Calculation

```
ULTHP2EGDATA / (1.0 * ULTHP2EGPFC)
```

SEG_LLC_PDU_Data_UL3

Average LLC-PDU Data (kbit)

Calculation

```
ULTHP3EGDATA / (1.0 * ULTHP3EGPFC)
```

SEG_LLC_PDU_Throughput_DL

Average LLC-PDU Throughput (kbit/s)

Calculation

```
DLBGEGTHR / (1.0 * DLBGEGPFC)
```

SEG_LLC_PDU_Throughput_DL1

Average LLC-PDU Throughput (kbit/s)

Calculation

```
DLTHP1EGTHR / (1.0 * DLTHP1EGPFC)
```

SEG_LLC_PDU_Throughput_DL2

Average LLC-PDU Throughput (kbit/s)

Calculation

```
DLTHP2EGTHR / (1.0 * DLTHP2EGPFC)
```

SEG_LLC_PDU_Throughput_DL3

Average LLC-PDU Throughput (kbit/s)

Calculation

```
DLTHP3EGTHR / (1.0 * DLTHP3EGPFC)
```

SEG_LLC_PDU_Throughput_UL

Average LLC-PDU Throughput (kbit/s)

Calculation

```
ULBGEGTHR / (1.0 * ULBGEGPFC)
```

SEG_LLC_PDU_Throughput_UL1

Average LLC-PDU Throughput (kbit/s)

Calculation

```
ULTHP1EGTHR / (1.0 * ULTHP1EGPFC)
```

SEG_LLC_PDU_Throughput_UL2

Average LLC-PDU Throughput (kbit/s)

Calculation

```
ULTHP2EGTHR / (1.0 * ULTHP2EGPFC)
```

SEG_LLC_PDU_Throughput_UL3

Average LLC-PDU Throughput (kbit/s)

Calculation

```
ULTHP3EGTHR / (1.0 * ULTHP3EGPFC)
```

SG_LLC_PDU_Data_DL

Average LLC-PDU Data (kbit)

Calculation

```
DLBGGDATA / (1.0 * DLBGGPFC)
```

SG_LLC_PDU_Data_DL1

Average LLC-PDU Data (kbit)

Calculation

```
DLTHP1GDATA / (1.0 * DLTHP1GPFC)
```

SG_LLC_PDU_Data_DL2

Average LLC-PDU Data (kbit)

Calculation

```
DLTHP2GDATA / (1.0 * DLTHP2GPFC)
```

SG_LLC_PDU_Data_DL3

Average LLC-PDU Data (kbit)

Calculation

```
DLTHP3GDATA / (1.0 * DLTHP3GPFC)
```

SG_LLC_PDU_Data_UL

Average LLC-PDU Data (kbit)

Calculation

```
ULBGGDATA / (1.0 * ULBGGPFC)
```

SG_LLC_PDU_Data_UL1

Average LLC-PDU Data (kbit)

Calculation

```
ULTHP1GDATA / (1.0 * ULTHP1GPFC)
```

SG_LLC_PDU_Data_UL2

Average LLC-PDU Data (kbit)

Calculation

```
ULTHP2GDATA / (1.0 * ULTHP2GPFC)
```

SG_LLC_PDU_Data_UL3

Average LLC-PDU Data (kbit)

Calculation

```
ULTHP3GDATA / (1.0 * ULTHP3GPFC)
```

SG_LLC_PDU_Throughput_DL

Average LLC-PDU Throughput (kbit/s)

Calculation

```
DLBGGTHR / (1.0 * DLBGGPFC)
```

SG_LLC_PDU_Throughput_DL1

Average LLC-PDU Throughput (kbit/s)

Calculation

```
DLTHP1GTHR / (1.0 * DLTHP1GPFC)
```

SG_LLC_PDU_Throughput_DL2

Average LLC-PDU Throughput (kbit/s)

Calculation

```
DLTHP2GTHR / (1.0 * DLTHP2GPFC)
```

SG_LLC_PDU_Throughput_DL3

Average LLC-PDU Throughput (kbit/s)

Calculation

```
DLTHP3GTHR / (1.0 * DLTHP3GPFC)
```

SG_LLC_PDU_Throughput_UL

Average LLC-PDU Throughput (kbit/s)

Calculation

```
ULBGGTHR / (1.0 * ULBGGPFC)
```

SG_LLC_PDU_Throughput_UL1

Average LLC-PDU Throughput (kbit/s)

Calculation

```
ULTHP1GTHR / (1.0 * ULTHP1GPFC)
```

SG_LLC_PDU_Throughput_UL2

Average LLC-PDU Throughput (kbit/s)

Calculation

```
ULTHP2GTHR / (1.0 * ULTHP2GPFC)
```

SG_LLC_PDU_Throughput_UL3

Average LLC-PDU Throughput (kbit/s)

Calculation

```
ULTHP3GTHR / (1.0 * ULTHP3GPFC)
```

TBF_EGPRS_DL

TBFs EGPRS, DL

Calculation

```
TBFDLEGPRS / (1.0 * TRAFFDLGPRSSCAN)
```

TBF_EGPRS_UL

TBFs EGPRS, UL

Calculation

```
TBFULEGPRS / (1.0 * TRAFFULGPRSSCAN)
```

TBF_GPRS_DL

TBFs GPRS, DL

Calculation

```
TBFDLGPRS / (1.0 * TRAFFDLGPRSSCAN)
```

TBF_GPRS_UL

TBFs GPRS, UL

Calculation

```
TBFULGPRS / (1.0 * TRAFFULGPRSSCAN)
```

TBF_PDCH_EGPRS_DL

TBFs/PDCH EGPRS, DL

Calculation

```
TBFPDLEGPRS / (1.0 * PDCHDLEGPRS)
```

TBF_PDCH_EGPRS_UL

TBFs/PDCH EGPRS, UL

Calculation

```
TBFPULEGPRS / (1.0 * PDCHULEGPRS)
```

TBF_PDCH_GPRS_DL

TBFs/PDCH GPRS, DL

Calculation

```
TBFPDLGPRS / (1.0 * PDCHDLGPRS)
```

TBF_PDCH_GPRS_UL

TBFs/PDCH GPRS, UL

Calculation

```
TBFPULGPRS / (1.0 * PDCHULGPRS)
```

TC_AVAIL%

TCH availability

Calculation

```
TAVAACC * 100.0 / (TAVASCAN * TNUCHCNT)
```

TC_AVAIL%_Rank

% Cell Availability Ranking (1 = lowest availability)

Calculation

```
rankAscending(nullValue(decode(TC_AVAIL%,0.0,nullFloat(),TC_AVAIL%),null-
Float()), TimeAndElement.Cell, nullValue(decode(TC_AVAIL%,0.0,null-
Float(),TC_AVAIL%),nullFloat()),IsValid())
```

TCF_AV_NR

Average Number of Available TCHs

Calculation

```
TAVAACC / (1.0 * TAVASCAN )
```

TCF_CONGS_AS%

Failed Attempts to Allocate TCH/Fs due to Congestion of Total Call Attempts

Calculation

```
TFCONGSAS * 100.0 / TASSALL
```

TCF_CONGS_AS%_Rank

% Cell Assignment Congestion (1 = highest congestion)

Calculation

```
rankDescending(TCF_CONGS_AS% , TimeAndElement.Cell, TCF_CONGS_AS%,
IsValid())
```

TCF_DR_ALL_C%

Full rate dropped TCH connections of total TCH connections. This formula shows t

Calculation

```
TFNDROP * 100.0 / TFMSESTB
```

TCF_DR_ALL_C%_Rank

% Cell Dropped Call Rate (1 = highest dropped %)

Calculation

```
rankDescending(TCF_DR_ALL_C% , TimeAndElement.Cell, TCF_DR_ALL_C%,
IsValid())
```

TCF_DR_BQ

Full rate dropped connections due to bad quality. From this formula the amount o

Calculation

```
vsum(TFDISQAUL, TFDISQADL, TFDISQABL)
```

TCF_DR_SS_C

Full rate dropped TCH connections due to low signal strength

Calculation

```
vsum(TFDISSDL, TFDISSUL, TFDISSBL)
```

TCF_MNHOLD

Full rate mean holding time [s]

Calculation

```
(60 * PERLEN * TFTRALACC) / (1.0 * TFNSCAN_CELTCHF * TFMSESTB )
```

TCF_TRAFF_VOL

Full rate TCH traffic volume [Erlang hours]

Calculation

```
protect((TFTRALACC / (1.0 * TFNSCAN_CELTCHF)) * PERLEN / 60.0)
```

TCF_TRAFF_VOL_BH

Full rate TCH traffic volume [Erlang hours]

Calculation

```
protect((TFTRALACC / (1.0 * TFNSCAN_CELTCHF)) * PERLEN / 60.0)
```

TCH_Critical_Carried

TCH Critical Traffic based on Carried Traffic

Calculation

```
capacityB( (int) TCF_AV_NR, TCH_GOS )
```

TCH_Critical_Offerred

TCH Critical Traffic based on Offered Traffic

Calculation

```
TCH_Critical_Carried / (1.0 - TCH_GOS )
```

TCH_Current_Util%

Current Utilization%

Calculation

```
100 * (DIMENSION / TCH_Critical_Offerred)
```

TCH_Est_GOS_%

Calculated Theoretical Grade of Service

Calculation

```
gos( (int) TCF_AV_NR, offTraffic( (int) TCF_AV_NR, TCF_TRAFF_VOL)) * 100.0
```

TCH_Est_Lost

Calculated Theoretical Lost Traffic

Calculation

```
(TCH_Est_Lost_H < 0.01) ? 0.0 : TCH_Est_Lost_H
```

TCH_Est_Lost_H

Calculated Theoretical Lost Traffic

Calculation

```
vsum(offTraffic( (int) TCF_AV_NR, TCF_TRAFF_VOL), -1.0 * TCF_TRAFF_VOL)
```

TCH_Exhaust_Date

Cell Exhaustion Date based on Critical Traffic

Calculation

```
dateToString(stringToDate(TimeAndElement.tstamp, "%Y-%m-%d") +
(int)(vsum(TCH_Critical_Carried, -1.0 * DIMENSION) /
(WM_FCAST_GROWTH(instance_id) * 3600 * 24)), "%Y-%m-%d")
```

TCH_Exhaust_Days

Number of Days until Cell Exhausts, based on Critical Traffic

Calculation

```
(int)(vsum(TCH_Critical_Carried, -1.0 * DIMENSION) /
(WM_FCAST_GROWTH(instance_id) * 3600 * 24))
```

TCH_Final_Util%

The forecast utilization at the end of the forecast period.

Calculation

```
100 * ( Forecast_Value3 / TCH_Critical_Offerred )
```

TCH_GOS

Dimensioned Grade of Service for TCH Channels

Calculation

TCH_Traffic_Off

Calculated Theoretical Offered Traffic

Calculation

```
offTraffic( (int) TCF_AV_NR, TCF_TRAFF_VOL)
```

TCH_Util_Offered

TCH %Utilization based on Offered Traffic

Calculation

```
100 * (TCH_Traffic_Off / (1.0 * TCH_Critical_Offerred ))
```

VENDORTECH

Vendor Technology

Calculation

```
isNull( PERLEN ) ? nullString() : "EricssonGSM"
```

Cell Peg Counts

The following is a list of peg counts for the Cell entity.

ACCEGEXTIPLAT

IP latency measured for EGPRS extended UL capable MS.

Data Source

BSC_IOG20_APG40

Source Field

ACCEGEXTIPLAT

Source Section

CELLGPRS3

ACCEGNOEXTIPLAT

IP latency measured for EGPRS no extended UL capable MS.

Data Source

BSC_IOG20_APG40

Source Field

ACCEGNOEXTIPLAT

Source Section

CELLGPRS3

ACCEGRLIPLAT

Accumulates the IP Latency for an EGPRS capable MS with Reduced Latency capability.

Data Source

BSC_APG40

Source Field

ACCEGRLIPLAT

Source Section

CELLGPRS3

ACCGEXTIPLAT

IP latency measured for GPRS extended UL capable MS.

Data Source

BSC_IOG20_APG40

Source Field

ACCGEXTIPLAT

Source Section

CELLGPRS3

ACCGNOEXTIPLAT

IP latency measured for GPRS no extended UL capable MS.

Data Source

BSC_IOG20_APG40

Source Field

ACCGNOEXTIPLAT

Source Section

CELLGPRS3

ACREJEIT

Number of times channel resources could not be reserved for EIT service as requested due to Admission Control and the action according to the parameter EITQOSPRIO was performed.

Data Source

BSC_IOG20_APG40

Source Field

ACREJEIT

Source Section

CELLEIT2

ACREQEIT

Total number of Admission Control requests for EIT.

Data Source

BSC_IOG20_APG40

Source Field

ACREQEIT

Source Section

CELLEIT2

ACTEUSE

The accumulated number of active users with EGPRS capable mobiles

Data Source

BSC_IOG20_APG40

Source Field

ACTEUSE

Source Section

CELLGPRS4

ACTGUSE

The accumulated number of active users with GPRS capable mobiles

Data Source

BSC_IOG20_APG40

Source Field

ACTGUSE

Source Section

CELLGPRS4

ACTUSESCAN

Number of scans of active users

Data Source

BSC_IOG20_APG40

Source Field

ACTUSESCAN

Source Section

CELLGPRS4

ALLPDCHACC

Number of allocated PDCHs accumulator

Data Source

BSC_IOG20_APG40

Source Field

ALLPDCHACC

Source Section

CELLGPRS

ALLPDCHACC0

Accumulate ALLPDCH0 on ALLPDCHACC0 i.e. every tenth. second.

Data Source

BSC_IOG20_APG40

Source Field

ALLPDCHACC0

Source Section

CHGRP0F

ALLPDCHACCSUB

nr of allocated PDCHs accumulator for OL subcells.

Data Source

BSC_IOG20_APG40

Source Field

ALLPDCHACCSUB

Source Section

CELLGPRSO

ALLPDCHACTACC

Number of used PDCHs last 15 minutes

Data Source

BSC_IOG20_APG40

Source Field

ALLPDCHACTACC

Source Section

CELLGPRS

ALLPDCHACTACCSUB

nr of used PDCHs accumulator for OL subcells.

Data Source

BSC_IOG20_APG40

Source Field

ALLPDCHACTACCSUB

Source Section

CELLGPRSO

ALLPDCHPEAK

The peak number of active PDCHs. If the measurement period is 1 hour then this value represents the peak for the last 15min of the hour

Data Source

BSC_IOG20_APG40

Source Field

ALLPDCHPEAK

Source Section

CELLGPRS

ALLPDCHSCAN

Number of accumulations of allocated PDCHs

Data Source

BSC_IOG20_APG40

Source Field

ALLPDCHSCAN

Source Section

CELLGPRS

ALLPDCHSCAN0

Number of accumulation of allocated PDCHs in channel group 0.

Data Source

BSC_IOG20_APG40

Source Field

ALLPDCHSCAN0

Source Section

CHGRP0F

ALLPDCHSCANSUB

nr of accumulations of allocated PDCHs in OL subcell.

Data Source

BSC_IOG20_APG40

Source Field

ALLPDCHSCANSUB

Source Section

CELLGPRSO

AMRABHOSUCFRHR

Number of successful intra cell handovers due to FR to HR channel rate change at Abis congestion made by an AMR capable mobile.

Data Source

BSC_IOG20_APG40

Source Field

AMRABHOSUCFRHR

Source Section

CLRATECHG

ATAMRLDHRFRHO

Number of intra cell handover attempts, due to HR to FR channel rate change triggered by low cell load and low Abis load, for AMR/HR calls.

Data Source

BSC_APG40

Source Field

ATAMRLDHRFRHO

Source Section

CLRATECHG

ATNAMRLDHRFRHO

Number of intra cell handover attempts, due to HR to FR channel rate change triggered by low cell load and low Abis load, for NON AMR/HR calls.

Data Source

BSC_APG40

Source Field

ATNAMRLDHRFRHO

Source Section

CLRATECHG

AVAILRBLKS

Number of available 20 ms RLC blocks on all allocated PDCHs (DL and UL).

Data Source

BSC_IOG20_APG40

Source Field

AVAILRBLKS

Source Section

CELLGPRS3

AWABHOSUCFRHR

Number of successful Intra Cell Handovers due to FR to HR channel rate change at Abis congestion

Data Source

BSC_APG40

Source Field

AWABHOSUCFRHR

Source Section

CLRATECHG

BCDTCBCOM

Number of intra-cell handover attempt out of BCCH channel group, BCCHDTCB criteria.

Data Source

BSC_IOG20_APG40

Source Field

BCDTCBCOM

Source Section

CELEVENTI

BCDTCBSUC

Number of successful intra-cell handover out of BCCH channel group, BCCHDTCB criteria.

Data Source

BSC_IOG20_APG40

Source Field

BCDTCBSUC

Source Section

CELEVENTI

BCLOSSCOM

Number of intra-cell handover attempt out of BCCH channel group, BCCHLOSS criteria.

Data Source

BSC_IOG20_APG40

Source Field

BCLOSSCOM

Source Section

CELEVENTI

BCLOSSSUC

Number of successful intra-cell handover out of BCCH channel group, BCCHLOSS criteria.

Data Source

BSC_IOG20_APG40

Source Field

BCLOSSSUC

Source Section

CELEVENTI

BDWNACC

When a timeout occurs RNLC scans through the whole cell file and for every defined cell a check shall be made if a BCCH is present or not

Data Source

BSC_IOG20_APG40

Source Field

BDWNACC

Source Section

DOWNTIME

BRHILAYER

Accumulated # locating evaluations where HCS ranking differs from basic ranking

Data Source

BSC_IOG20_APG40

Source Field

BRHILAYER

Source Section

CELLHCS

BSS_RELEASE

Release

BULTBFSCAN

Number of UL TBFs mode BASIC scanned during the measurement period.

Data Source

BSC_IOG20_APG40

Source Field

BULTBFSCAN

Source Section

TRAFGPRS3

CAVAACC

Available Channels Accum (every tenth of a second)

Data Source

BSC_IOG20_APG40

Source Field

CAVAACC

Source Section

CLSDCCH

CAVASCAN

Accum of available channels CNT (inc every 1/10th second)

Data Source

BSC_IOG20_APG40

Source Field

CAVASCAN

Source Section

CLSDCCH

CAVASCANSUB

Number of accumulations of available channels counter for overlaid subcell.

Data Source

BSC_IOG20_APG40

Source Field

CAVASCANSUB

Source Section

CLSDCCHO

CAVASUB

Available channel accumulator for overlaid subcell

Data Source

BSC_IOG20_APG40

Source Field

CAVASUB

Source Section

CLSDCCHO

CCALLS

Call Attempt CNT

Data Source

BSC_IOG20_APG40

Source Field

CCALLS

Source Section

CLSDCCH

CCALLSSUB

Call attempt counter for overlaid subcell

Data Source

BSC_IOG20_APG40

Source Field

CCALLSSUB

Source Section

CLSDCCHO

CCHHOCNT

Number of SDCCH handover attempts.

Data Source

BSC_IOG20_APG40

Source Field

CCHHOCNT

Source Section

CELLCCHHO

CCHHOSUC

Number of successful SDCCH handover attempts.

Data Source

BSC_IOG20_APG40

Source Field

CCHHOSUC

Source Section

CELLCCHHO

CCHHOTOCH

Number of SDCCH handover attempt, return to old channel.

Data Source

BSC_IOG20_APG40

Source Field

CCHHOTOCH

Source Section

CELLCCHHO

CCONGS

Congestion CNT

Data Source

BSC_IOG20_APG40

Source Field

CCONGS

Source Section

CLSDCCH

CCONGSSUB

Congestion counter for overlaid subcell

Data Source

BSC_IOG20_APG40

Source Field

CCONGSSUB

Source Section

CLSDCCHO

CDISQA

Dropped connections at bad quality down or up link

Data Source

BSC_IOG20_APG40

Source Field

CDISQA

Source Section

CELLCCHDR

CDISQASUB

Number of dropped connections due to a bad quality downlink or uplink per overlaid subcell

Data Source

BSC_IOG20_APG40

Source Field

CDISQASUB

Source Section

CELLCCHDR

CDISSS

Number of dropped connections due to a low signal strength downlink or uplink per cell

Data Source

BSC_IOG20_APG40

Source Field

CDISSS

Source Section

CELLCCHDR

CDISSS1

Dropped connections for classmark 1 MSs, at low signal strength down or up link.

Data Source

BSC_IOG20_APG40

Source Field

CDISSS1

Source Section

CELLCCHDR

CDISSS2

Dropped connections for classmark 2 MSs, at low signal strength down or up link.

Data Source

BSC_IOG20_APG40

Source Field

CDISSS2

Source Section

CELLCCHDR

CDISSS3

Dropped connections for classmark 3 MSs, at low signal strength down or up link.

Data Source

BSC_IOG20_APG40

Source Field

CDISSS3

Source Section

CELLCCHDR

CDISSS4

Dropped connections for classmark 4 MSs, at low signal strength down or up link.

Data Source

BSC_IOG20_APG40

Source Field

CDISSS4

Source Section

CELLCCHDR

CDISSS5

Dropped connections for classmark 5 MSs, at low signal strength down or up link.

Data Source

BSC_IOG20_APG40

Source Field

CDISSS5

Source Section

CELLCCHDR

CDISSSSUB

Number of dropped connections due to a low signal strength downlink or uplink per overlaid subcell

Data Source

BSC_IOG20_APG40

Source Field

CDISSSSUB

Source Section

CELLCCHDR

CDISTA

Number of dropped connections due to a excessive TA

Data Source

BSC_IOG20_APG40

Source Field

CDISTA

Source Section

CELLCCHDR

CELLMOVED

Number of times a cell is moved to another RP

Data Source

BSC_IOG20_APG40

Source Field

CELLMOVED

Source Section

CELLGPRS

CELLPPRS

Accumulated nr of pre-empted effective OPDCHs.

Data Source

BSC_IOG20_APG40

Source Field

CELLPPRS

Source Section

CLQOSSCON

CESTCHACTIV

Number of SDDCH establishment failure that occurs under Channel Allocation and Channel Activation.

Data Source

BSC_IOG20_APG40

Source Field

CESTCHACTIV

Source Section

CLSDCCH

CESTIMMASS

Number of SDCCH establishment failure due to timeout after sending Immediate Assignment.

Data Source

BSC_IOG20_APG40

Source Field

CESTIMMASS

Source Section

CLSDCCH

CLSTIME

Total time in seconds cell load sharing evaluations is performed in the cell.

Data Source

BSC_IOG20_APG40

Source Field

CLSTIME

Source Section

CELEVENTH

CLUDISQA

Dropped connections at bad quality down or up link during Location Area Update.

Data Source

BSC_APG40

Source Field

CLUDISQA

Source Section

CELLCCHDR

CLUDISQA_CELL7SPARE

Dropped LA updates at low quality down or up link per cell

Data Source

BSC_APG40

Source Field

CELL7SPARE

Source Section

CELLGEN

CLUDISQASUB

Dropped connections at bad quality down or up link per overlaid subcel during Location Area Update.

Data Source

BSC_APG40

Source Field

CLUDISQASUB

Source Section

CELLCCHDR

CLUDISQASUB_CELL8SPARE

Dropped LA updates at low quality down or up link per overlaid subcell

Data Source

BSC_APG40

Source Field

CELL8SPARE

Source Section

CELLGEN

CLUDISSS

Dropped connections at low signal strength down or up link during Location Area Update.

Data Source

BSC_APG40

Source Field

CLUDISSS

Source Section

CELLCCHDR

CLUDISSS_CELL5SPARE

Dropped LA updates at low signal strength down or up link per cell

Data Source

BSC_APG40

Source Field

CELL5SPARE

Source Section

CELLGEN

CLUDISSSSUB

Dropped connections at low signal strength down or up link per overlaid subcell during Location Area Update.

Data Source

BSC_APG40

Source Field

CLUDISSSSUB

Source Section

CELLCCHDR

CLUDISSSSUB_CELL6SPARE

Dropped LA updates at low signal strength down or up link per overlaid subcell

Data Source

BSC_APG40

Source Field

CELL6SPARE

Source Section

CELLGEN

CLUDISTA

Dropped connections at excessive TA during Location Area Update.

Data Source

BSC_APG40

Source Field

CLUDISTA

Source Section

CELLCCHDR

CLUDISTA_CELL4SPARE

Dropped LA updates at excessive TA

Data Source

BSC_APG40

Source Field

CELL4SPARE

Source Section

CELLGEN

CLUMSESTAB

Successful MS channel establishment on SDCCHs during Location Area Update.

Data Source

BSC_APG40

Source Field

CLUMSESTAB

Source Section

CLSDCCH

CLUMSESTAB_CELL1SPARE

Successful LA updates on SDCCHs

Data Source

BSC_APG40

Source Field

CELL1SPARE

Source Section

CELLGEN

CLUMSESTABSUB_CELL2SPARE

Successful LA updates on SDCCHs in overlaid subcell

Data Source

BSC_APG40

Source Field

CELL2SPARE

Source Section

CELLGEN

CLUNDROP

Dropped connections due to failure during Location Area Update.

Data Source

BSC_APG40

Source Field

CLUNDROP

Source Section

CLSDCCH

CLUNDROP_CELL3SPARE

Dropped LA updates due to failure

Data Source

BSC_APG40

Source Field

CELL3SPARE

Source Section

CELLGEN

CMSESTAB

Succ SDCCH Rel due to Radio Cong

Data Source

BSC_IOG20_APG40

Source Field

CMSESTAB

Source Section

CLSDCCH

CMSESTABSUB

Successful MS channel establishment on SDCCHs for overlaid subcell

Data Source

BSC_IOG20_APG40

Source Field

CMSESTABSUB

Source Section

CLSDCCHO

CNDROP

Drop Connections due to failure

Data Source

BSC_IOG20_APG40

Source Field

CNDROP

Source Section

CLSDCCH

CNRELCONG

SDCCHs released due to radio resource congestion.

Data Source

BSC_IOG20_APG40

Source Field

CNRELCONG

Source Section

CLSDCCH

CNRELCONGSUB

Number of SDCCH released due to a radio resource congestion

Data Source

BSC_IOG20_APG40

Source Field

CNRELCONGSUB

Source Section

CLSDCCHO

CNROCNT

RA Atts received by BSC

Data Source

BSC_IOG20_APG40

Source Field

CNROCNT

Source Section

RANDOMACC

CNSCAN

Accum of SDCCH Traff Lev CNT (inc every 2 second)

Data Source

BSC_IOG20_APG40

Source Field

CNSCAN

Source Section

CLSDCCH

CNSCANSUB

Number of accumulations of SDCCH traffic level counter for overlaid subcell.

Data Source

BSC_IOG20_APG40

Source Field

CNSCANSUB

Source Section

CLSDCCHO

CNUCHCNT

defined channels

Data Source

BSC_IOG20_APG40

Source Field

CNUCHCNT

Source Section

CLSDCCH

CNUCHSUB

Number of defined channels in overlaid subcell

Data Source

BSC_IOG20_APG40

Source Field

CNUCHSUB

Source Section

CLSDCCHO

CONFATTC

configuration attempts from Traffic Channel (TCH) to Stand Alone Dedicated Control Channel (SDCCH) per cell

Data Source

BSC_IOG20_APG40

Source Field

CONFATTC

Source Section

CELLCONF

CONFATTT

Number of configuration attempts from SDCCH to TCH per cell

Data Source

BSC_IOG20_APG40

Source Field

CONFATTT

Source Section

CELLCONF

CRSULREL

Total number of times, per cell, that an established uplink TBF was released due to a successful cell reselection.

Data Source

BSC_IOG20_APG40

Source Field

CRSULREL

Source Section

CELLGPRS2

CRSULRELSUB

Total number of times, per OL subcell that an established uplink TBF was released due to successful cell reselection.

Data Source

BSC_IOG20_APG40

Source Field

CRSULRELSUB

Source Section

CELLGPRSO

CS12DLACK

Number of retransmitted radio messages, downlink (R10)

Data Source

BSC_IOG20_APG40

Source Field

CS12DLACK

Source Section

CELLGPRS

CS12DLACKSUB

Tot amount of RLC data volume successfully acknowledged by the MSs

Data Source

BSC_IOG20_APG40

Source Field

CS12DLACKSUB

Source Section

CELLGPRSO

CS12DLSCHED

Number of radio block messages, downlink (R10)

Data Source

BSC_IOG20_APG40

Source Field

CS12DLSCHED

Source Section

CELLGPRS

CS12DLSCHEDSUB

Tot nr of RLC data blocks scheduled by the MAC protocol in the OL subcell only, for CS-1/2 mode.

Data Source

BSC_IOG20_APG40

Source Field

CS12DLSCHEDSUB

Source Section

CELLGPRSO

CS12ULACK

Number of retransmitted radio messages, uplink (R10)

Data Source

BSC_IOG20_APG40

Source Field

CS12ULACK

Source Section

CELLGPRS

CS12ULACKSUB

Tot amount of RLC data volume successfully received by the PCU

Data Source

BSC_IOG20_APG40

Source Field

CS12ULACKSUB

Source Section

CELLGPRSO

CS12ULSCHED

Number of radio block messages, uplink (R10)

Data Source

BSC_IOG20_APG40

Source Field

CS12ULSCHED

Source Section

CELLGPRS

CS12ULSCHEDSUB

Tot nr of RLC data blocks scheduled by the MAC protocol in the OL subcell only, for CS-1/2 mode.

Data Source

BSC_IOG20_APG40

Source Field

CS12ULSCHEDSUB

Source Section

CELLGPRSO

CS14DLACK

Total amount of RLC data volume successfully acknowledged by MSs with a GPRS mode TBF (CS-1 to CS-4)

Data Source

BSC_IOG20_APG40

Source Field

CS14DLACK

Source Section

CELLGPRS2

CS14DLACKSUB

Tot amount of RLC data volume successfully acknowledged by the MSs from the Tot RLC data blocks scheduled on the DL in the OL subcell only, for CS-1-4 mode.

Data Source

BSC_IOG20_APG40

Source Field

CS14DLACKSUB

Source Section

CELLGPRSO

CS14DLSCHED

RLC data blocks sent with CS1-4

Data Source

BSC_IOG20_APG40

Source Field

CS14DLSCHED

Source Section

CELLGPRS2

CS14DLSCHEDSUB

Tot nr of RLC data blocks scheduled by the MAC protocol in the OL subcell only, for CS-1-4 mode.

Data Source

BSC_IOG20_APG40

Source Field

CS14DLSCHEDSUB

Source Section

CELLGPRSO

CS14QDLACK

Total amount of RLC data volume successfully acknowledged by MSs with a GPRS mode TBF (CS-1 to CS-4). GPRS RLC data blocks during CS ramp-up and ramp-down periods excluded

Data Source

BSC_IOG20_APG40

Source Field

CS14QDLACK

Source Section

CELLGPRS2

CS14QDLACKSUB

Total amount of RLC data volume successfully acknowledged by the MSs from the total RLC data blocks scheduled on the DL in the OL subcell only,for CS 1 4 mode. TBFs carrying EIT excluded. GPRS RLC data blocks during CS ramp-up and ramp-down periods excluded

Data Source

BSC_IOG20_APG40

Source Field

CS14QDLACKSUB

Source Section

CELLGPRSO

CS14QDLSCHED

Total number of RLC data blocks sent for user data or GMM/SM signalling for CS-1/2/3/4, RLC acknowledged, mode transfers on the downlink (so includes retransmissions but excludes RLC dummy blocks, RLC/MAC signalling blocks, RLC idle blocks and GPRS data blocks during CS ramp-up and ramp-down periods).

Data Source

BSC_IOG20_APG40

Source Field

CS14QDLSCHED

Source Section

CELLGPRS2

CS14QDLSCHEDSUB

Total number of RLC data blocks scheduled by the MAC protocol in the OL subcell only, for CS-1-4 mode. TBFs carrying EIT and GPRS RLC data blocks during CS ramp-up and ramp-down periods excluded.

Data Source

BSC_IOG20_APG40

Source Field

CS14QDLSCHEDSUB

Source Section

CELLGPRSO

CSCSOPTCONG

Signalling Connection setup time congestion for other procedures that can be completed on a SDCCH.

Data Source

BSC_IOG20_APG40

Source Field

CSCSOPTCONG

Source Section

CLSDCCH

CSCSTCONG

Signalling Connection setup time congestion for procedures requiring a TCH.

Data Source

BSC_IOG20_APG40

Source Field

CSCSTCONG

Source Section

CLSDCCH

CSIMMASS

Number of CS IMMEDIATE ASSIGNMENTS sent on the CCCH.

Data Source

BSC_IOG20_APG40

Source Field

CSIMMASS

Source Section

CCCHLOAD

CSMSDWN

SMS message downlink SDCCH

Data Source

BSC_IOG20_APG40

Source Field

CSMSDWN

Source Section

CLSMS

CSMSUP

SMS message uplink SDCCH

Data Source

BSC_IOG20_APG40

Source Field

CSMSUP

Source Section

CLSMS

CTCONGS

SDCCH Congestion Time (in seconds)

Data Source

BSC_IOG20_APG40

Source Field

CTCONGS

Source Section

CLSDCCH

CTCONSUB

SDCCH congestion time for overlaid subcell

Data Source

BSC_IOG20_APG40

Source Field

CTCONSUB

Source Section

CLSDCCHO

CTRALACC

Traff level CNT Accum (period 2 seconds)

Data Source

BSC_IOG20_APG40

Source Field

CTRALACC

Source Section

CLSDCCH

CTRALSUB

Traffic level counter acccumulator for overlaid subcell

Data Source

BSC_IOG20_APG40

Source Field

CTRALSUB

Source Section

CLSDCCHO

DISBQA_CELEVENTD

Disconnection at bad radio link quality

Data Source

BSC_IOG20_APG40

Source Field

DISBQA

Source Section

CELEVENTD

DISBQA_CELLEVENT

Disconnection at bad radio link quality

Data Source

BSC_IOG20_APG40

Source Field

DISBQA

Source Section

CELLEVENT

DISBSS_CELEVENTD

Disconnection at low signal strength

Data Source

BSC_IOG20_APG40

Source Field

DISBSS

Source Section

CELEVENTD

DISBSS_CELLEVENT

Disconnection at bad signal strength

Data Source

BSC_IOG20_APG40

Source Field

DISBSS

Source Section

CELLEVENT

DISCIMMASS

Number of discarded Immediate Assignments (for CS and PS) in the BTS.

Data Source

BSC_IOG20_APG40

Source Field

DISCIMMASS

Source Section

CCCHLOAD

DISETA_CELEVENTD

Disconnection at TA out of range

Data Source

BSC_IOG20_APG40

Source Field

DISETA

Source Section

CELEVENTD

DISETA_CELLEVENT

Disconnection at excessive TA

Data Source

BSC_IOG20_APG40

Source Field

DISETA

Source Section

CELLEVENT

DISFER

Disconnection at high FER

Data Source

BSC_APG40

Source Field

DISFER

Source Section

CELEVENTD

DISNORM_CELEVENTD

Number of normal disconnections

Data Source

BSC_IOG20_APG40

Source Field

DISNORM

Source Section

CELEVENTD

DISNORM_CELLEVENT

Normal disconnection

Data Source

BSC_IOG20_APG40

Source Field

DISNORM

Source Section

CELLEVENT

DISPH

Number of disconnections due to preemption

Data Source

BSC_IOG20_APG40

Source Field

DISPH

Source Section

PREEMP

DISRET3G

Disconnection with request to immediately connect to UTRAN network.

Data Source

BSC_APG40

Source Field

DISRET3G

Source Section

CELEVENTD

DLACTBPDCH

Number of B-PDCHs that carried one or more active TBFs of any mode, DL.

Data Source

BSC_IOG20_APG40

Source Field

DLACTBPDCH

Source Section

TRAFDLGPRS

DLACTEPDCH

Number of E-PDCHs that carried one or more active TBFs of any mode, DL.

Data Source

BSC_IOG20_APG40

Source Field

DLACTEPDCH

Source Section

TRAFDLGPRS

DLACTGPDCH

Number of G-PDCHs that carried one or more active TBFs of any mode, DL.

Data Source

BSC_IOG20_APG40

Source Field

DLACTGPDCH

Source Section

TRAFDLGPRS

DLACTTBFPBPDCH

Sum of simultaneous active TBFs (all TBF modes) on each and every B-PDCH, DL.

Data Source

BSC_IOG20_APG40

Source Field

DLACTTBFPBPDCH

Source Section

TRAFDLGPRS

DLACTTBFPEPDCH

Sum of simultaneous active TBFs (all TBF modes) on each and every E-PDCH, DL.

Data Source

BSC_IOG20_APG40

Source Field

DLACTTBFPEPDCH

Source Section

TRAFDLGPRS

DLACTTBFPGPDCH

Sum of simultaneous active TBFs (all TBF modes) on each and every G-PDCH, DL.

Data Source

BSC_IOG20_APG40

Source Field

DLACTTBFPGPDCH

Source Section

TRAFDLGPRS

DLBGEGDATA

Accumulated LLC PDU data for active EGPRS, DL and QoS class Background PFCs.

Data Source

BSC_IOG20_APG40

Source Field

DLBGEGDATA

Source Section

CELLQOSEG

DLBGEGPFC

Accumulated nr of active PFCs for EGPRS, DL and QoS class Background PFCs.

Data Source

BSC_IOG20_APG40

Source Field

DLBGEGPFC

Source Section

CELLQOSEG

DLBGEGTHR

Accumulated throughput per active PFC for EGPRS, DL and QoS class Background PFCs.

Data Source

BSC_IOG20_APG40

Source Field

DLBGEGTHR

Source Section

CELLQOSEG

DLBGGDATA

Accumulated LLC PDU data for active GPRS, DL and QoS class Background PFCs.

Data Source

BSC_IOG20_APG40

Source Field

DLBGGDATA

Source Section

CELLQOSG

DLBGGPFC

Accumulated nr of active PFCs for GPRS, DL and QoS class Background PFCs.

Data Source

BSC_IOG20_APG40

Source Field

DLBGGPFC

Source Section

CELLQOSG

DLBGGTHR

Accumulated throughput per active PFC for GPRS, DL and QoS class Background PFCs.

Data Source

BSC_IOG20_APG40

Source Field

DLBGGTHR

Source Section

CELLQOSG

DLBPDCH

nr of B-PDCH that carried one or more DL TBF of any mode.

Data Source

BSC_IOG20_APG40

Source Field

DLBPDCH

Source Section

TRAFDLGPRS

DLEPDCH

nr of E-PDCH that carried one or more DL TBF of any mode.

Data Source

BSC_IOG20_APG40

Source Field

DLEPDCH

Source Section

TRAFDLGPRS

DLGMMVOL

Counts GMM/SM signalling DL

Data Source

BSC_IOG20_APG40

Source Field

DLGMMVOL

Source Section

CELLGPRS3

DLGPDCH

nr of G-PDCH that carried one or more DL TBF of any mode.

Data Source

BSC_IOG20_APG40

Source Field

DLGPDCH

Source Section

TRAFDLGPRS

DLINTBGVOL

Counts Interactive & Background PFCs DL

Data Source

BSC_IOG20_APG40

Source Field

DLINTBGVOL

Source Section

CELLGPRS3

DLMSEGDATA

Accumulated LLC data volume for interactive/background, EGPRS capable MSs,DL.

Data Source

BSC_IOG20_APG40

Source Field

DLMSEGDATA

Source Section

CELLGPRS4

DLMSEGTHR

Accumulated weighted LLC throughput for interactive/background, EGPRS capable MSs, DL.

Data Source

BSC_IOG20_APG40

Source Field

DLMSEGTHR

Source Section

CELLGPRS4

DLMSGDATA

Accumulated LLC data volume for interactive/background, GPRS capable MSs,DL.

Data Source

BSC_IOG20_APG40

Source Field

DLMSGDATA

Source Section

CELLGPRS4

DLMSGTHR

Accumulated weighted LLC throughput for interactive/background, GPRS capable MSs,DL.

Data Source

BSC_IOG20_APG40

Source Field

DLMSGTHR

Source Section

CELLGPRS4

DLSAICVOL

LCC user data volume generated by SAIC capable MSs on DL. GMM/SM signalling is not included.

Data Source

BSC_IOG20_APG40

Source Field

DLSAICVOL

Source Section

CELLGPRS3

DLSTRVOL

Counts the total LLC data vol. streaming in PFCs DL

Data Source

BSC_IOG20_APG40

Source Field

DLSTRVOL

Source Section

CELLGPRS3

DLTBFEST

Number of DL TBF establishment requests

Data Source

BSC_IOG20_APG40

Source Field

DLTBFEST

Source Section

CELLGPRS

DLTBFPBPDCH

Sum of simultaneous DL TBF (all TBF modes) on each and every B-PDCH.

Data Source

BSC_IOG20_APG40

Source Field

DLTBFPBPDCH

Source Section

TRAFDLGPRS

DLTBFPEPDCH

Sum of simultaneous DL TBF (all TBF modes) on each and every E-PDCH.

Data Source

BSC_IOG20_APG40

Source Field

DLTBFPEPDCH

Source Section

TRAFDLGPRS

DLTBFPGPDCH

Sum of simultaneous DL TBF (all TBF modes) on each and every G-PDCH.

Data Source

BSC_IOG20_APG40

Source Field

DLTBFPGPDCH

Source Section

TRAFDLGPRS

DLTHP1EGDATA

Accumulated LLC PDU data for active EGPRS, DL and QoS class THP1 PFCs.

Data Source

BSC_IOG20_APG40

Source Field

DLTHP1EGDATA

Source Section

CELLQOSEG

DLTHP1EGPFC

Accumulated nr of active PFCs for EGPRS, DL and QoS class THP1 PFCs.

Data Source

BSC_IOG20_APG40

Source Field

DLTHP1EGPFC

Source Section

CELLQOSEG

DLTHP1EGTHR

Accumulated throughput per active PFC for EGPRS, DL and QoS class THP1 PFCs.

Data Source

BSC_IOG20_APG40

Source Field

DLTHP1EGTHR

Source Section

CELLQOSEG

DLTHP1GDATA

Accumulated LLC PDU data for active GPRS, DL and QoS class THP1 PFCs.

Data Source

BSC_IOG20_APG40

Source Field

DLTHP1GDATA

Source Section

CELLQOSG

DLTHP1GPFC

Accumulated nr of active PFCs for GPRS, DL and QoS class THP1 PFCs.

Data Source

BSC_IOG20_APG40

Source Field

DLTHP1GPFC

Source Section

CELLQOSG

DLTHP1GTHR

Accumulated throughput per active PFC for GPRS, DL and QoS class THP1 PFCs.

Data Source

BSC_IOG20_APG40

Source Field

DLTHP1GTHR

Source Section

CELLQOSG

DLTHP2EGDATA

Accumulated LLC PDU data for active EGPRS, DL and QoS class THP2 PFCs.

Data Source

BSC_IOG20_APG40

Source Field

DLTHP2EGDATA

Source Section

CELLQOSEG

DLTHP2EGPFC

Accumulated nr of active PFCs for EGPRS, DL and QoS class THP2 PFCs.

Data Source

BSC_IOG20_APG40

Source Field

DLTHP2EGPFC

Source Section

CELLQOSEG

DLTHP2EGTHR

Accumulated throughput per active PFC for EGPRS, DL and QoS class THP2 PFCs.

Data Source

BSC_IOG20_APG40

Source Field

DLTHP2EGTHR

Source Section

CELLQOSEG

DLTHP2GDATA

Accumulated LLC PDU data for active GPRS, DL and QoS class THP2 PFCs.

Data Source

BSC_IOG20_APG40

Source Field

DLTHP2GDATA

Source Section

CELLQOSG

DLTHP2GPFC

Accumulated nr of active PFCs for GPRS, DL and QoS class THP2 PFCs.

Data Source

BSC_IOG20_APG40

Source Field

DLTHP2GPFC

Source Section

CELLQOSG

DLTHP2GTHR

Accumulated throughput per active PFC for GPRS, DL and QoS class THP2 PFCs.

Data Source

BSC_IOG20_APG40

Source Field

DLTHP2GTHR

Source Section

CELLQOSG

DLTHP3EGDATA

Accumulated LLC PDU data for active EGPRS, DL and QoS class THP3 PFCs.

Data Source

BSC_IOG20_APG40

Source Field

DLTHP3EGDATA

Source Section

CELLQOSEG

DLTHP3EGPFC

Accumulated nr of active PFCs for EGPRS, DL and QoS class THP3 PFCs.

Data Source

BSC_IOG20_APG40

Source Field

DLTHP3EGPFC

Source Section

CELLQOSEG

DLTHP3EGTHR

Accumulated throughput per active PFC for EGPRS, DL and QoS class THP3 PFCs.

Data Source

BSC_IOG20_APG40

Source Field

DLTHP3EGTHR

Source Section

CELLQOSEG

DLTHP3GDATA

Accumulated LLC PDU data for active GPRS, DL and QoS class THP3 PFCs.

Data Source

BSC_IOG20_APG40

Source Field

DLTHP3GDATA

Source Section

CELLQOSG

DLTHP3GPFC

Accumulated nr of active PFCs for GPRS, DL and QoS class THP3 PFCs.

Data Source

BSC_IOG20_APG40

Source Field

DLTHP3GPFC

Source Section

CELLQOSG

DLTHP3GTHR

Accumulated throughput per active PFC for GPRS, DL and QoS class THP3 PFCs.

Data Source

BSC_IOG20_APG40

Source Field

DLTHP3GTHR

Source Section

CELLQOSG

DTCBCOMUL

Subcell change attempts and successful subcell change

Data Source

BSC_IOG20_APG40

Source Field

DTCBCOMUL

Source Section

CELEVENTSC

DTCBSUCUL

Subcell change attempts and successful subcell change

Data Source

BSC_IOG20_APG40

Source Field

DTCBSUCUL

Source Section

CELEVENTSC

DTMACTEUSE

The accumulated number of active users with EGPRS capable mobiles in DTM

Data Source

BSC_IOG20_APG40

Source Field

DTMACTEUSE

Source Section

CLDTMPER

DTMACTGUSE

The accumulated number of active users with GPRS capable mobiles in DTM.

Data Source

BSC_IOG20_APG40

Source Field

DTMACTGUSE

Source Section

CLDTMPER

DTMACTUSESCAN

Number of scans of active users in DTM

Data Source

BSC_IOG20_APG40

Source Field

DTMACTUSESCAN

Source Section

CLDTMPER

DTMDLEGDATA

Accumulated LLC PDU data for active EGPRS capable MSs in DTM, DL

Data Source

BSC_IOG20_APG40

Source Field

DTMDLEGDATA

Source Section

CLDTMQOS

DTMDLGDATA

Accumulated LLC PDU data for active GPRS capable MSs in DTM, DL

Data Source

BSC_IOG20_APG40

Source Field

DTMDLGDATA

Source Section

CLDTMQOS

DTMDLMAXTS

The accumulation of the maximum possible reservable timeslots DL for DTM TBFs

Data Source

BSC_IOG20_APG40

Source Field

DTMDLMAXTS

Source Section

CLDTMPER

DTMDLMUTIL

The average multislot utilisation for DL DTM TBFs in modes BASIC, GPRS and EGPRS

Data Source

BSC_IOG20_APG40

Source Field

DTMDLMUTIL

Source Section

CLDTMPER

DTMDLSTRDATA

Accumulated LLC PDU data for active GPRS/EGPRS streaming in DTM, DL

Data Source

BSC_IOG20_APG40

Source Field

DTMDLSTRDATA

Source Section

CLDTMQOS

DTMDLTBFSCAN

Number of DL DTM TBFs in modes BASIC, GPRS and EGPRS scanned during the measurement period.

Data Source

BSC_IOG20_APG40

Source Field

DTMDLTBFSCAN

Source Section

CLDTMPER

DTMEGDLTHP

Accumulated throughput *data for active PFC for EGPRS capable MSs in DTM, DL

Data Source

BSC_IOG20_APG40

Source Field

DTMEGDLTHP

Source Section

CLDTMQOS

DTMEGULTHP

Accumulated throughput *data for active PFC for EGPRS capable MSs in DTM, UL

Data Source

BSC_IOG20_APG40

Source Field

DTMEGULTHP

Source Section

CLDTMQOS

DTMGDLTHP

Accumulated throughput*data for active PFC for GPRS capable MSs in DTM, DL

Data Source

BSC_IOG20_APG40

Source Field

DTMGDLTHP

Source Section

CLDTMQOS

DTMGULTHP

Accumulated throughput*data for active PFC for GPRS capable MSs in DTM, UL

Data Source

BSC_IOG20_APG40

Source Field

DTMGULTHP

Source Section

CLDTMQOS

DTMOTHLDIS

Total number of times the entire contents of the downlink LLC PDU buffer was discarded due to the reason ?Other? for DTM TBFs

Data Source

BSC_IOG20_APG40

Source Field

DTMOTHLDIS

Source Section

CLDTMPER

DTMOTHULREL

Total number of UL DTM TBFs released due to all other reasons than pre-emption and radio contact lost.

Data Source

BSC_IOG20_APG40

Source Field

DTMOTHULREL

Source Section

CLDTMPER

DTMPREEMPTULREL

Total number of UL DTM TBFs released due to pre-emption

Data Source

BSC_IOG20_APG40

Source Field

DTMPREEMPTULREL

Source Section

CLDTMPER

DTMRRLDIS

Total number of times the entire contents of the downlink LLC PDU buffer was discarded due to radio reasons for DTM TBFs

Data Source

BSC_IOG20_APG40

Source Field

DTMRRLDIS

Source Section

CLDTMPER

DTMTFILDIS

Total number of times the entire contents of the downlink LLC PDU buffer was discarded due to the reason, ?No available PDCH or TFI? for DTM TBFs

Data Source

BSC_IOG20_APG40

Source Field

DTMTFILDIS

Source Section

CLDTMPER

DTMULABISFAILRES

Number of UL Temporary Block Flows (TBFs) for MSs in DTM mode that have been rejected on PDCHs carried on traffic session that have Abis congestion, for Packet Abis.

Data Source

BSC_APG40

Source Field

DTMULABISFAILRES

Source Section

CLDTMPER

DTMULEGDATA

Accumulated LLC PDU data for active EGPRS capable MSs in DTM, UL

Data Source

BSC_IOG20_APG40

Source Field

DTMULEGDATA

Source Section

CLDTMQOS

DTMULGDATA

Accumulated LLC PDU data for active GPRS capable MSs in DTM, UL

Data Source

BSC_IOG20_APG40

Source Field

DTMULGDATA

Source Section

CLDTMQOS

DTMULMAXTS

The accumulation of the maximum possible reservable timeslots UL for DTM TBFs+

Data Source

BSC_IOG20_APG40

Source Field

DTMULMAXTS

Source Section

CLDTMPER

DTMULMUTIL

The average multislot utilisation for UL DTM TBFs in modes BASIC, GPRS and EGPRS

Data Source

BSC_IOG20_APG40

Source Field

DTMULMUTIL

Source Section

CLDTMPER

DTMULOTHFAILRES

Total number of failed UL reservations for the reason ?Other? as a result of the message DTM REQUEST

Data Source

BSC_IOG20_APG40

Source Field

DTMULOTHFAILRES

Source Section

CLDTMPER

DTMULRELLOST

Total number of times a DTM UL TBF is closed down because radio contact with the MS has been lost after the Packet UL Assignment, DTM Assignment Command or Packet Assignment has been sent (time-out of T3169)

Data Source

BSC_IOG20_APG40

Source Field

DTMULRELLOST

Source Section

CLDTMPER

DTMULSTRDATA

Accumulated LLC PDU data for active GPRS/EGPRS streaming in DTM, UL

Data Source

BSC_IOG20_APG40

Source Field

DTMULSTRDATA

Source Section

CLDTMQOS

DTMULSUCRES

Total number successful UL reservations as a result of the message DTM REQUEST

Data Source

BSC_IOG20_APG40

Source Field

DTMULSUCRES

Source Section

CLDTMPER

DTMULTBFSCAN

Number of UL DTM TBFs in modes BASIC, GPRS and EGPRS scanned during the measurement period.

Data Source

BSC_IOG20_APG40

Source Field

DTMULTBFSCAN

Source Section

CLDTMPER

DTMULTFIFAILRES

Total number of failed UL reservations for the reason ?No PDCH, USF or TFI? as a result of the message DTM REQUEST

Data Source

BSC_IOG20_APG40

Source Field

DTMULTFIFAILRES

Source Section

CLDTMPER

EASDLACTSBL

Number of downlink SACCH blocks received by the MS during downlink SACCH block repetition

Data Source

BSC_APG40

Source Field

EASDLACTSBL

Source Section

CLTCHEAS

EASDLCAPSBL

Number of downlink SACCH blocks received by an MS while downlink SACCH blocks are repeated

Data Source

BSC_APG40

Source Field

EASDLCAPSBL

Source Section

CLTCHEAS

EASULACTMREP

Number of Measurement Reports received from MS during uplink SACCH block repetition

Data Source

BSC_APG40

Source Field

EASULACTMREP

Source Section

CLTCHEAS

EASULCAPMREP

Number of Measurement Reports received from MS capable of SACCH block repetition

Data Source

BSC_APG40

Source Field

EASULCAPMREP

Source Section

CLTCHEAS

EGEXTIPLAT

Number of samples for EGPRS extended UL capable MS

Data Source

BSC_IOG20_APG40

Source Field

EGEXTIPLAT

Source Section

CELLGPRS3

EGNOEXTIPLAT

Number of samples for EGPRS no extended UL capable MS

Data Source

BSC_IOG20_APG40

Source Field

EGNOEXTIPLAT

Source Section

CELLGPRS3

EGRLIPLAT

Number of samples for EGPRS with Reduced Latency capable MS.

Data Source

BSC_APG40

Source Field

EGRLIPLAT

Source Section

CELLGPRS3

EITDLBPDCH

No of PDCHs carried at least one EIT B-TBF DL.

Data Source

BSC_IOG20_APG40

Source Field

EITDLBPDCH

Source Section

CELLEIT

EITDLEPDCH

No of PDCHs carried at least one EIT E-TBF DL.

Data Source

BSC_IOG20_APG40

Source Field

EITDLEPDCH

Source Section

CELLEIT

EITDLETBF

No of DL EIT Streaming? E-TBFs

Data Source

BSC_IOG20_APG40

Source Field

EITDLETBF

Source Section

CELLEIT

EITDLGPDCH

No of PDCHs carried at least one EIT G-TBF DL.

Data Source

BSC_IOG20_APG40

Source Field

EITDLGPDCH

Source Section

CELLEIT

EITDLGTBF

No of DL EIT Streaming? B- and G- TBFs

Data Source

BSC_IOG20_APG40

Source Field

EITDLGTBF

Source Section

CELLEIT

EITTBFSCAN

Total no of scans for counting PDCHs and TBFs for EIT

Data Source

BSC_IOG20_APG40

Source Field

EITTBFSCAN

Source Section

CELLEIT

EITULBPDCH

No of?PDCHs carried at least one EIT B-TBF UL.

Data Source

BSC_IOG20_APG40

Source Field

EITULBPDCH

Source Section

CELLEIT

EITULEPDCH

No of PDCHs carried at least one EIT E-TBF UL.

Data Source

BSC_IOG20_APG40

Source Field

EITULEPDCH

Source Section

CELLEIT

EITULETBF

No of UL EIT Streaming E-TBFs

Data Source

BSC_IOG20_APG40

Source Field

EITULETBF

Source Section

CELLEIT

EITULGPDCH

No of?PDCHs carried at least one EIT G-TBF UL.

Data Source

BSC_IOG20_APG40

Source Field

EITULGPDCH

Source Section

CELLEIT

EITULGTBF

No of UL EIT Streaming B- and G- TBFs

Data Source

BSC_IOG20_APG40

Source Field

EITULGTBF

Source Section

CELLEIT

EPDCHGE

Accumulated number of E-PDCHs in the cell that are simultaneously reserved by at least one DL E-TBF and at least one DL B-or G-TBF.

Data Source

BSC_IOG20_APG40

Source Field

EPDCHGE

Source Section

TRAFDLGPRS

ERBCUL

Number of transmitted RLC Data blocks, uplink for EGPRS

Data Source

BSC_IOG20_APG40

Source Field

ERBCUL

Source Section

CELLGPRS

ERETRANSUL

Number of retransmitted RLC Data blocks, uplink for EGPRS

Data Source

BSC_IOG20_APG40

Source Field

ERETRANSUL

Source Section

CELLGPRS

EULTBFSCAN

Number of UL TBFs mode EGPRS scanned during the measurement period.

Data Source

BSC_IOG20_APG40

Source Field

EULTBFSCAN

Source Section

TRAFGPRS3

FAILDLANSW

Number of DL TBF establishment attempts that failed due to either No answer from MS, Access Delay > max TA, Packet Control Ack syntax error

Data Source

BSC_APG40

Source Field

FAILDLANSW

Source Section

CELLGPRS

FAILDLTBFEST

Number of unsuccessful DL TBF establishment requests due to lack of resources

Data Source

BSC_IOG20_APG40

Source Field

FAILDLTBFEST

Source Section

CELLGPRS

FAILPH

Number of failed assignment and intra BSC handover attempts for connections with Pre-emption Capability Indicator set.

Data Source

BSC_IOG20_APG40

Source Field

FAILPH

Source Section

PREEMP

FLUDISC

Tot nr of flush messages received from the SGSN that resulted in one or more LLC PDUs in the buffer being discarded.

Data Source

BSC_IOG20_APG40

Source Field

FLUDISC

Source Section

CELLGPRS2

FLUMOVE

Tot nr of flush messages received from the SGSN that resulted in some LLC PDUs in a buffer being moved to another queue

Data Source

BSC_IOG20_APG40

Source Field

FLUMOVE

Source Section

CELLGPRS2

FLX16ATT

Number of allocation attempts (FLX16ATT) of a 16 kbit/s Abis path

Data Source

BSC_IOG20_APG40

Source Field

FLX16ATT

Source Section

CELLFLXAB

FLX16SUCC

Number of successful allocations of a 16 kbit/s Abis path.

Data Source

BSC_IOG20_APG40

Source Field

FLX16SUCC

Source Section

CELLFLXAB

FLX64ATT

Number of allocation attempts (FLX16ATT)of a 64 kbit/s Abis path.

Data Source

BSC_IOG20_APG40

Source Field

FLX64ATT

Source Section

CELLFLXAB

FLX64SUCC

Number of successful allocations of a 64 kbit/s Abis path.

Data Source

BSC_IOG20_APG40

Source Field

FLX64SUCC

Source Section

CELLFLXAB

FLX8SUCC

Number of successful allocations for an AMR FR using a 8 kbit/s Abis path

Data Source

BSC_IOG20_APG40

Source Field

FLX8SUCC

Source Section

CELLFLXAB

FLXCS16ATT

Number of attempts to allocate a 16k flexible Abis paths for CS

Data Source

BSC_IOG20_APG40

Source Field

FLXCS16ATT

Source Section

CELLFLXAB

FLXCS16SUCC

Number of successful allocations of a 16k flexible Abis path for CS

Data Source

BSC_IOG20_APG40

Source Field

FLXCS16SUCC

Source Section

CELLFLXAB

GBR10FAIL

Accumulated nr of streaming TBFs that have failed to reserve any PDCHs for the exclusive use

Data Source

BSC_IOG20_APG40

Source Field

GBR10FAIL

Source Section

CLQOSSCON2

GBR10LOW

Accumulated nr of Streaming TBFs that have been reserved on fewer PDCHs than required in GBR interval 10-19.

Data Source

BSC_IOG20_APG40

Source Field

GBR10LOW

Source Section

CLQOSSCON

GBR10REQ

Accumulated nr of streaming TBFs that have been reserved on minimum required nr of PDCHs in GBR interval 10-19.

Data Source

BSC_IOG20_APG40

Source Field

GBR10REQ

Source Section

CLQOSSCON

GBR120FAIL

Accumulated nr of streaming TBFs that have failed to reserve any PDCHs for the exclusive use

Data Source

BSC_IOG20_APG40

Source Field

GBR120FAIL

Source Section

CLQOSSCON2

GBR120LOW

Accumulated nr of Streaming TBFs that have been reserved on fewer PDCHs than required in GBR interval 120-159.

Data Source

BSC_IOG20_APG40

Source Field

GBR120LOW

Source Section

CLQOSSCON

GBR120REQ

Accumulated nr of streaming TBFs that have been reserved on minimum required nr of PDCHs in GBR interval 120-159.

Data Source

BSC_IOG20_APG40

Source Field

GBR120REQ

Source Section

CLQOSSCON

GBR160FAIL

Accumulated nr of streaming TBFs that have failed to reserve any PDCHs for the exclusive use

Data Source

BSC_IOG20_APG40

Source Field

GBR160FAIL

Source Section

CLQOSSCON2

GBR160LOW

Accumulated nr of Streaming TBFs that have been reserved on fewer PDCHs than required in GBR interval 160 and over.

Data Source

BSC_IOG20_APG40

Source Field

GBR160LOW

Source Section

CLQOSSCON

GBR160REQ

Accumulated nr of streaming TBFs that have been reserved on minimum required nr of PDCHs in GBR interval 160 and over.

Data Source

BSC_IOG20_APG40

Source Field

GBR160REQ

Source Section

CLQOSSCON

GBR20FAIL

Accumulated nr of streaming TBFs that have failed to reserve any PDCHs for the exclusive use

Data Source

BSC_IOG20_APG40

Source Field

GBR20FAIL

Source Section

CLQOSSCON2

GBR20LOW

Accumulated nr of Streaming TBFs that have been reserved on fewer PDCHs than required in GBR interval 20-29.

Data Source

BSC_IOG20_APG40

Source Field

GBR20LOW

Source Section

CLQOSSCON

GBR20REQ

Accumulated nr of streaming TBFs that have been reserved on minimum required nr of PDCHs in GBR interval 20-29.

Data Source

BSC_IOG20_APG40

Source Field

GBR20REQ

Source Section

CLQOSSCON

GBR30FAIL

Accumulated nr of streaming TBFs that have failed to reserve any PDCHs for the exclusive use

Data Source

BSC_IOG20_APG40

Source Field

GBR30FAIL

Source Section

CLQOSSCON2

GBR30LOW

Accumulated nr of Streaming TBFs that have been reserved on fewer PDCHs than required in GBR interval 30-39.

Data Source

BSC_IOG20_APG40

Source Field

GBR30LOW

Source Section

CLQOSSCON

GBR30REQ

Accumulated nr of streaming TBFs that have been reserved on minimum required nr of PDCHs in GBR interval 30-39.

Data Source

BSC_IOG20_APG40

Source Field

GBR30REQ

Source Section

CLQOSSCON

GBR40FAIL

Accumulated nr of streaming TBFs that have failed to reserve any PDCHs for the exclusive use

Data Source

BSC_IOG20_APG40

Source Field

GBR40FAIL

Source Section

CLQOSSCON2

GBR40LOW

Accumulated nr of Streaming TBFs that have been reserved on fewer PDCHs than required in GBR interval 40-59.

Data Source

BSC_IOG20_APG40

Source Field

GBR40LOW

Source Section

CLQOSSCON

GBR40REQ

Accumulated nr of streaming TBFs that have been reserved on minimum required nr of PDCHs in GBR interval 40-59.

Data Source

BSC_IOG20_APG40

Source Field

GBR40REQ

Source Section

CLQOSSCON

GBR60FAIL

Accumulated nr of streaming TBFs that have failed to reserve any PDCHs for the exclusive use

Data Source

BSC_IOG20_APG40

Source Field

GBR60FAIL

Source Section

CLQOSSCON2

GBR60LOW

Accumulated nr of Streaming TBFs that have been reserved on fewer PDCHs than required in GBR interval 60-79.

Data Source

BSC_IOG20_APG40

Source Field

GBR60LOW

Source Section

CLQOSSCON

GBR60REQ

Accumulated nr of streaming TBFs that have been reserved on minimum required nr of PDCHs in GBR interval 60-79.

Data Source

BSC_IOG20_APG40

Source Field

GBR60REQ

Source Section

CLQOSSCON

GBR80FAIL

Accumulated nr of streaming TBFs that have failed to reserve any PDCHs for the exclusive use

Data Source

BSC_IOG20_APG40

Source Field

GBR80FAIL

Source Section

CLQOSSCON2

GBR80LOW

Accumulated nr of Streaming TBFs that have been reserved on fewer PDCHs than required in GBR interval 80-119.

Data Source

BSC_IOG20_APG40

Source Field

GBR80LOW

Source Section

CLQOSSCON

GBR80REQ

Accumulated nr of streaming TBFs that have been reserved on minimum required nr of PDCHs in GBR interval 80-119.

Data Source

BSC_IOG20_APG40

Source Field

GBR80REQ

Source Section

CLQOSSCON

GETBFONPDCH

Accumulated number of DL B-TBFs and DL G-TBFs on all PDCHs in the cell that are simultaneously reserved by at least one DL E-TBF.

Data Source

BSC_IOG20_APG40

Source Field

GETBFONPDCH

Source Section

TRAFDLGPRS

GEXTIPLAT

Number of samples for GPRS extended UL capable MS

Data Source

BSC_IOG20_APG40

Source Field

GEXTIPLAT

Source Section

TRAFGPRS2

GNOETBFONPDCH

Accumulated number of DL B-TBFs and DL G-TBFs on all PDCHs in the cell that are not simultaneously reserved by any DL E-TBF

Data Source

BSC_IOG20_APG40

Source Field

GNOETBFONPDCH

Source Section

TRAFDLGPRS

GNOEXTIPLAT

Number of samples for GPRS no extended UL capable MS

Data Source

BSC_IOG20_APG40

Source Field

GNOEXTIPLAT

Source Section

TRAFGPRS2

GPRSAVA

Every time when ?inject? is performed successfully in the cell by a MS.

Data Source

BSC_IOG20_APG40

Source Field

GPRSAVA

Source Section

CELLGPRS3

GPRSCELLAVA

Number of five-minute intervals a cell is unavailable for GPRS

Data Source

BSC_IOG20_APG40

Source Field

GPRSCELLAVA

Source Section

CELLGPRS3

GULTBFSCAN

Number of UL TBFs mode GPRS scanned during the measurement period.

Data Source

BSC_IOG20_APG40

Source Field

GULTBFSCAN

Source Section

TRAFGPRS3

HOAATOL

Handover attempts to overlaid subcell.

Data Source

BSC_IOG20_APG40

Source Field

HOAATOL

Source Section

CELLEVENT

HOAATOL_CELEVENTS

Handover attempts to overlaid subcell

Data Source

BSC_IOG20_APG40

Source Field

HOAATOL

Source Section

CELEVENTS

HOAATUL

Handover attempts to underlaid subcell.

Data Source

BSC_IOG20_APG40

Source Field

HOAATUL

Source Section

CELLEVENT

HOAATUL_CELEVENTS

Handover attempts to underlaid subcell

Data Source

BSC_IOG20_APG40

Source Field

HOAATUL

Source Section

CELEVENTS

HOATFRHRAMR

nr of intra cell handover attempts due to FR to HR channel rate change made by an AMR capable mobile

Data Source

BSC_IOG20_APG40

Source Field

HOATFRHRAMR

Source Section

CLRATECHG

HOATFRHRAW

Number of Intra Cell Handover attempts due to FR to HR channel rate change for AMR-WB calls.

Data Source

BSC_APG40

Source Field

HOATFRHRAW

Source Section

CLRATECHG

HOATFRHRNAMR

nr of intra cell handover attempts due to FR to HR channel rate change made by a mobile not capable of AMR

Data Source

BSC_IOG20_APG40

Source Field

HOATFRHRNAMR

Source Section

CLRATECHG

HOATHRFRAMR

nr of intra cell handover attempts due to HR to FR channel rate change made by an AMR capable mobile

Data Source

BSC_IOG20_APG40

Source Field

HOATHRFRAMR

Source Section

CLRATECHG

HOATHRFRNAMR

nr of intra cell handover attempts due to HR to FR channel rate change made by a mobile not capable of AMR

Data Source

BSC_IOG20_APG40

Source Field

HOATHRFRNAMR

Source Section

CLRATECHG

HOATTBL_CELEVENTH

Number of handover attempts due to blocking

Data Source

BSC_IOG20_APG40

Source Field

HOATTBL

Source Section

CELEVENTH

HOATTBL_CELLEVENT

Handover attempts due to operation and maintenance intervention.

Data Source

BSC_IOG20_APG40

Source Field

HOATTBL

Source Section

CELLEVENT

HOATTHRPACK

Number of intra cell handover attempts due to half rate packing.

Data Source

BSC_IOG20_APG40

Source Field

HOATTHRPACK

Source Section

CELEVENTI

HOATTLS_CELEVENTH

Handover attempts due to Cell Load Sharing

Data Source

BSC_IOG20_APG40

Source Field

HOATTLS

Source Section

CELEVENTH

HOATTLS_CELLEVENT

Handover attempts due to cell load sharing.

Data Source

BSC_IOG20_APG40

Source Field

HOATTLS

Source Section

CELLEVENT

HOATTOLMAXIHO

Number of handover attempts from UL to OL subcell due to MAXIHO in UL subcell

Data Source

BSC_IOG20_APG40

Source Field

HOATTOLMAXIHO

Source Section

CELEVENTS

HOATTPH

Number of handover attempts due to pre-emption.

Data Source

BSC_IOG20_APG40

Source Field

HOATTPH

Source Section

PREEMP

HOATTULBQ

Number of handover attempts to underlaid subcell due to bad quality urgency

Data Source

BSC_IOG20_APG40

Source Field

HOATTULBQ

Source Section

CELEVENTS

HOATTULMAXIHO

Number of handover attempts from OL to UL subcell due to MAXIHO in OL subcell

Data Source

BSC_IOG20_APG40

Source Field

HOATTULMAXIHO

Source Section

CELEVENTS

HOINBOCH_CELEVENTI

Number of unsuccessful intra-cell handover attempts, MS back on old channel

Data Source

BSC_IOG20_APG40

Source Field

HOINBOCH

Source Section

CELEVENTI

HOINBOCH_CELLEVENT

Number of unsuccessful intra cell handover attempts, MS back on old channel.

Data Source

BSC_IOG20_APG40

Source Field

HOINBOCH

Source Section

CELLEVENT

HOINBQA_CELEVENTI

Number of intra-cell handover attempts at bad quality in both links

Data Source

BSC_IOG20_APG40

Source Field

HOINBQA

Source Section

CELEVENTI

HOINBQA_CELLEVENT

Number of intra cell handover attempts at bad quality in both links.

Data Source

BSC_IOG20_APG40

Source Field

HOINBQA

Source Section

CELLEVENT

HOINBQA0

Peg Intra Cell Attempts BQ Both Links

Data Source

BSC_IOG20_APG40

Source Field

HOINBQA0

Source Section

CHGRP0H

HOINDQA_CELEVENTI

Number of intra-cell handover attempts due to bad downlink quality

Data Source

BSC_IOG20_APG40

Source Field

HOINDQA

Source Section

CELEVENTI

HOINDQA_CELLEVENT

Number of intra cell handover attempts at bad downlink quality.

Data Source

BSC_IOG20_APG40

Source Field

HOINDQA

Source Section

CELLEVENT

HOINDQA0

Peg Intra Cell HO attempts BQ DL

Data Source

BSC_IOG20_APG40

Source Field

HOINDQA0

Source Section

CHGRP0H

HOINSUC_CELEVENTI

Number of successful intra-cell handovers

Data Source

BSC_IOG20_APG40

Source Field

HOINSUC

Source Section

CELEVENTI

HOINSUC_CELLEVENT

Number of successful intra cell handovers.

Data Source

BSC_IOG20_APG40

Source Field

HOINSUC

Source Section

CELLEVENT

HOINUQA_CELEVENTI

Number of intra-cell handover attempts due to bad uplink quality

Data Source

BSC_IOG20_APG40

Source Field

HOINUQA

Source Section

CELEVENTI

HOINUQA_CELLEVENT

Number of intra cell handover attempts at bad uplink quality.

Data Source

BSC_IOG20_APG40

Source Field

HOINUQA

Source Section

CELLEVENT

HOINUQA0

Peg Intra Cell HO attempts BQ UL

Data Source

BSC_IOG20_APG40

Source Field

HOINUQA0

Source Section

CHGRP0H

HONIDQA0

Number of intra cell handover attempts bad quality downlink in channel group zero.

Data Source

BSC_IOG20_APG40

Source Field

HONIDQA0

Source Section

CHGRP0H

HONIDQA0_DL

Number of intra cell handover attempts bad quality downlink in channel group zero.

Data Source

BSC_IOG20_APG40

Source Field

HONIDQA0

Source Section

CHGRP0H

HONIUQA0

Number of intra cell handover attempts bad quality both links in channel group zero.

Data Source

BSC_IOG20_APG40

Source Field

HONIUQA0

Source Section

CHGRP0H

HONIUQA0_UP_DL

Number of intra cell handover attempts bad quality both links in channel group zero.

Data Source

BSC_IOG20_APG40

Source Field

HONIUQA0

Source Section

CHGRP0H

HOSUCBL_CELEVENTH

Number of successful handovers due to blocking

Data Source

BSC_IOG20_APG40

Source Field

HOSUCBL

Source Section

CELEVENTH

HOSUCBL_CELLEVENT

Successful handovers due to operation and maintenance intervention.

Data Source

BSC_IOG20_APG40

Source Field

HOSUCBL

Source Section

CELLEVENT

HOSUCFRHRAMR

nr of succesful intra cell handovers due to FR to HR channel rate change made by an AMR capable mobile

Data Source

BSC_IOG20_APG40

Source Field

HOSUCFRHRAMR

Source Section

CLRATECHG

HOSUCFRHRAW

Number of successful Intra Cell Handovers due to FR to HR channel rate change

Data Source

BSC_APG40

Source Field

HOSUCFRHRAW

Source Section

CLRATECHG

HOSUCFRHRNAMR

nr of successful intra cell handovers due to FR to HR channel rate change made by a mobile not capable of AMR

Data Source

BSC_IOG20_APG40

Source Field

HOSUCFRHRNAMR

Source Section

CLRATECHG

HOSUCHRFRAMR

nr of successful intra cell handovers due to HR to FR channel rate change made by an AMR capable mobile

Data Source

BSC_IOG20_APG40

Source Field

HOSUCHRFRAMR

Source Section

CLRATECHG

HOSUCHRFRNAMR

nr of successful intra cell handovers due to HR to FR channel rate change made by a mobile not capable of AMR

Data Source

BSC_IOG20_APG40

Source Field

HOSUCHRFRNAMR

Source Section

CLRATECHG

HOSUCHRPACK

Number of successful intra cell handovers due to half rate packing.

Data Source

BSC_IOG20_APG40

Source Field

HOSUCHRPACK

Source Section

CELEVENTI

HOSUCLS_CELEVENTH

Succ Handover due to Cell Load Sharing

Data Source

BSC_IOG20_APG40

Source Field

HOSUCLS

Source Section

CELEVENTH

HOSUCLS_CELLEVENT

Successful handovers due to cell load sharing.

Data Source

BSC_IOG20_APG40

Source Field

HOSUCLS

Source Section

CELLEVENT

HOSUCOL

Number of Successful handover attempts to overlaid subcell.

Data Source

BSC_IOG20_APG40

Source Field

HOSUCOL

Source Section

CELLEVENT

HOSUCOL_CELEVENTS

Number of Successful handover attempts to overlaid subcell

Data Source

BSC_IOG20_APG40

Source Field

HOSUCOL

Source Section

CELEVENTS

HOSUCOLMAXIHO

Number of successful handovers from UL to OL subcell due to MAXIHO in UL subcell

Data Source

BSC_IOG20_APG40

Source Field

HOSUCOLMAXIHO

Source Section

CELEVENTS

HOSUCTCHOPT

Number of successful Intra Cell Handover due to TCH optimization.

Data Source

BSC_IOG20_APG40

Source Field

HOSUCTCHOPT

Source Section

CELEVENTI

HOSUCUL

Number of Successful handover attempts to underlaid subcell.

Data Source

BSC_IOG20_APG40

Source Field

HOSUCUL

Source Section

CELLEVENT

HOSUCUL_CELEVENTS

Number of Successful handover attempts to underlaid subcell

Data Source

BSC_IOG20_APG40

Source Field

HOSUCUL

Source Section

CELEVENTS

HOSUCULBQ

Number of handover successful attempts to underlaid subcell due to bad quality urgency

Data Source

BSC_IOG20_APG40

Source Field

HOSUCULBQ

Source Section

CELEVENTS

HOSUCULMAXIHO

Number of successful handovers from OL to UL subcell due to MAXIHO in OL subcell

Data Source

BSC_IOG20_APG40

Source Field

HOSUCULMAXIHO

Source Section

CELEVENTS

IAULREL

Tot nr of times an UL TBFis closed down because radio contact has been lost

Data Source

BSC_IOG20_APG40

Source Field

IAULREL

Source Section

CELLGPRS2

IAULRELSUB

Tot nr of times an UL TBF is closed down because radio contact has been lost

Data Source

BSC_IOG20_APG40

Source Field

IAULRELSUB

Source Section

CELLGPRSO

ID1_CELEVENTD

Global cell pointer to the serving cell

Data Source

BSC_IOG20_APG40

Source Field

ID1

Source Section

CELEVENTD

ID1_CELEVENTH

ID

Data Source

BSC_IOG20_APG40

Source Field

ID1

Source Section

CELEVENTH

ID1_CELEVENTI

Numeric Cell ID

Data Source

BSC_IOG20_APG40

Source Field

ID1

Source Section

CELEVENTI

ID1_CELEVENTS

Global cell pointer to the serving cell

Data Source

BSC_IOG20_APG40

Source Field

ID1

Source Section

CELEVENTS

ID1_CELLCCHHO

Numeric Cell ID

Data Source

BSC_IOG20_APG40

Source Field

ID1

Source Section

CELLCCHHO

ID1_CELLCONF

Numeric Cell ID

Data Source

BSC_IOG20_APG40

Source Field

ID1

Source Section

CELLCONF

ID1_CELLEVENT

Numeric cell ID

Data Source

BSC_IOG20_APG40

Source Field

ID1

Source Section

CELLEVENT

INT10BREGPRSTBF

Accumulated nr of EGPRS TBFs within the bitrate interval 10 kbps (interval < 12.5 kbps).

Data Source

BSC_IOG20_APG40

Source Field

INT10BREGPRSTBF

Source Section

RLINKBITR

INT10BRGPRSTBF

Accumulated nr of GPRS TBFs within the bitrate interval 10 kbps (9 kbps <= interval < 11 kbps).

Data Source

BSC_IOG20_APG40

Source Field

INT10BRGPRSTBF

Source Section

RLINKBITR

INT12BRGPRSTBF

Accumulated nr of GPRS TBFs within the bitrate interval 12 kbps (11 kbps <= interval < 13 kbps).

Data Source

BSC_IOG20_APG40

Source Field

INT12BRGPRSTBF

Source Section

RLINKBITR

INT14BRGPRSTBF

Accumulated nr of GPRS TBFs within the bitrate interval 14 kbps (13 kbps <= interval < 15 kbps).

Data Source

BSC_IOG20_APG40

Source Field

INT14BRGPRSTBF

Source Section

RLINKBITR

INT15BREGPRSTBF

Accumulated nr of EGPRS TBFs within the bitrate interval 15 kbps (12.5 kbps <= interval < 17.5 kbps)

Data Source

BSC_IOG20_APG40

Source Field

INT15BREGPRSTBF

Source Section

RLINKBITR

INT16BRGPRSTBF

Accumulated nr of GPRS TBFs within the bitrate interval 16 kbps (15 kbps <= interval < 17 kbps).

Data Source

BSC_IOG20_APG40

Source Field

INT16BRGPRSTBF

Source Section

RLINKBITR

INT18BRGPRSTBF

Accumulated nr of GPRS TBFs within the bitrate interval 18 kbps (17 kbps <= interval).

Data Source

BSC_IOG20_APG40

Source Field

INT18BRGPRSTBF

Source Section

RLINKBITR

INT20BREGPRSTBF

Accumulated nr of EGPRS TBFs within the bitrate interval 20 kbps (17.5 kbps <= interval < 22.5 kbps)

Data Source

BSC_IOG20_APG40

Source Field

INT20BREGPRSTBF

Source Section

RLINKBITR

INT25BREGPRSTBF

Accumulated nr of EGPRS TBFs within the bitrate interval 25 kbps (22.5 kbps <= interval < 27.5 kbps)

Data Source

BSC_IOG20_APG40

Source Field

INT25BREGPRSTBF

Source Section

RLINKBITR

INT30BREGPRSTBF

Accumulated nr of EGPRS TBFs within the bitrate interval 30 kbps (27.5 kbps <= interval < 32.5 kbps)

Data Source

BSC_IOG20_APG40

Source Field

INT30BREGPRSTBF

Source Section

RLINKBITR

INT35BREGPRSTBF

Accumulated nr of EGPRS TBFs within the bitrate interval 35 kbps (32.5 kbps <= interval < 37.5 kbps)

Data Source

BSC_IOG20_APG40

Source Field

INT35BREGPRSTBF

Source Section

RLINKBITR

INT40BREGPRSTBF

Accumulated nr of EGPRS TBFs within the bitrate interval 40 kbps (37.5 kbps <= interval < 42.5 kbps)

Data Source

BSC_IOG20_APG40

Source Field

INT40BREGPRSTBF

Source Section

RLINKBITR

INT45BREGPRSTBF

Accumulated nr of EGPRS TBFs within the bitrate interval 45 kbps (42.5 kbps <= interval < 47.5 kbps)

Data Source

BSC_IOG20_APG40

Source Field

INT45BREGPRSTBF

Source Section

RLINKBITR

INT50BREGPRSTBF

Accumulated nr of EGPRS TBFs within the bitrate interval 50 kbps (47.5 kbps <= interval < 52.5 kbps)

Data Source

BSC_IOG20_APG40

Source Field

INT50BREGPRSTBF

Source Section

RLINKBITR

INT55BREGPRSTBF

Accumulated nr of EGPRS TBFs within the bitrate interval 55 kbps (52.5 kbps <= interval).

Data Source

BSC_IOG20_APG40

Source Field

INT55BREGPRSTBF

Source Section

RLINKBITR

INT8BRGPRSTBF

Accumulated nr of GPRS TBFs within the bitrate interval 8 kbps (interval < 9 kbps).

Data Source

BSC_IOG20_APG40

Source Field

INT8BRGPRSTBF

Source Section

RLINKBITR

INTERCNT

Intermittent faults. Incremented when an intermittent fault is reported on one of the managed objects within the TG.

Data Source

BSC_IOG20_APG40

Source Field

INTERCNT

Source Section

MOTG

ITFOSIB1

Accumulated number of idle TCH/F in the overlaid subcell in interference band 1

Data Source

BSC_IOG20_APG40

Source Field

ITFOSIB1

Source Section

IDLEOTCHF

ITFOSIB2

Accumulated number of idle TCH/F in the overlaid subcell in interference band 2

Data Source

BSC_IOG20_APG40

Source Field

ITFOSIB2

Source Section

IDLEOTCHF

ITFOSIB3

Accumulated number of idle TCH/F in the overlaid subcell in interference band 3

Data Source

BSC_IOG20_APG40

Source Field

ITFOSIB3

Source Section

IDLEOTCHF

ITFOSIB4

Accumulated number of idle TCH/F in the overlaid subcell in interference band 4

Data Source

BSC_IOG20_APG40

Source Field

ITFOSIB4

Source Section

IDLEOTCHF

ITFOSIB5

Accumulated number of idle TCH/F in the overlaid subcell in interference band 5

Data Source

BSC_IOG20_APG40

Source Field

ITFOSIB5

Source Section

IDLEOTCHF

ITFUSIB1

Accumulated number of idle TCH/Fs in Underlaid Subcell in Interference Band 1

Data Source

BSC_IOG20_APG40

Source Field

ITFUSIB1

Source Section

IDLEUTCHF

ITFUSIB2

Accumulated number of idle TCH/Fs in Underlaid Subcell in Interference Band 2

Data Source

BSC_IOG20_APG40

Source Field

ITFUSIB2

Source Section

IDLEUTCHF

ITFUSIB3

Accumulated number of idle TCH/Fs in Underlaid Subcell in Interference Band 3

Data Source

BSC_IOG20_APG40

Source Field

ITFUSIB3

Source Section

IDLEUTCHF

ITFUSIB4

Accumulated number of idle TCH/Fs in Underlaid Subcell in Interference Band 4

Data Source

BSC_IOG20_APG40

Source Field

ITFUSIB4

Source Section

IDLEUTCHF

ITFUSIB5

Accumulated number of idle TCH/Fs in Underlaid Subcell in Interference Band 5

Data Source

BSC_IOG20_APG40

Source Field

ITFUSIB5

Source Section

IDLEUTCHF

ITHOSIB1

Accumulated nr of idle TCH/Hs in Overlaid Subcell in Interference Band 1

Data Source

BSC_IOG20_APG40

Source Field

ITHOSIB1

Source Section

IDLEOTCHH

ITHOSIB2

Accumulated nr of idle TCH/Hs in Overlaid Subcell in Interference Band 2

Data Source

BSC_IOG20_APG40

Source Field

ITHOSIB2

Source Section

IDLEOTCHH

ITHOSIB3

Accumulated nr of idle TCH/Hs in Overlaid Subcell in Interference Band 3

Data Source

BSC_IOG20_APG40

Source Field

ITHOSIB3

Source Section

IDLEOTCHH

ITHOSIB4

Accumulated nr of idle TCH/Hs in Overlaid Subcell in Interference Band 4

Data Source

BSC_IOG20_APG40

Source Field

ITHOSIB4

Source Section

IDLEOTCHH

ITHOSIB5

Accumulated nr of idle TCH/Hs in Overlaid Subcell in Interference Band 5

Data Source

BSC_IOG20_APG40

Source Field

ITHOSIB5

Source Section

IDLEOTCHH

ITHUSIB1

Accumulated nr of idle TCH/Hs in Underlaid Subcell in Interference Band 1

Data Source

BSC_IOG20_APG40

Source Field

ITHUSIB1

Source Section

IDLEUTCHH

ITHUSIB2

Accumulated nr of idle TCH/Hs in Underlaid Subcell in Interference Band 2

Data Source

BSC_IOG20_APG40

Source Field

ITHUSIB2

Source Section

IDLEUTCHH

ITHUSIB3

Accumulated nr of idle TCH/Hs in Underlaid Subcell in Interference Band 3

Data Source

BSC_IOG20_APG40

Source Field

ITHUSIB3

Source Section

IDLEUTCHH

ITHUSIB4

Accumulated nr of idle TCH/Hs in Underlaid Subcell in Interference Band 4

Data Source

BSC_IOG20_APG40

Source Field

ITHUSIB4

Source Section

IDLEUTCHH

ITHUSIB5

Accumulated nr of idle TCH/Hs in Underlaid Subcell in Interference Band 5

Data Source

BSC_IOG20_APG40

Source Field

ITHUSIB5

Source Section

IDLEUTCHH

LCCLRELBUSYHI3

Number of active PDCHs released due to entering High Load Mode

Data Source

BSC_IOG20_APG40

Source Field

LCCLRELBUSYHI3

Source Section

CELLGPRS3

LDISEST

Number of times the entire content of the downlink LLC PDU buffer was discarded during downlink TBF establishment was discarded during downlink TBF establishment. GSM/SM signalling excluded

Data Source

BSC_APG40

Source Field

LDISEST

Source Section

CELLGPRS

LDISOTH

Tot nr of times the entire contents of the downlink LLC PDU buffer were discarded due to the reason 'Other'.

Data Source

BSC_IOG20_APG40

Source Field

LDISOTH

Source Section

CELLGPRS2

LDISRR

Tot nr of times the entire contents of the downlink LLC PDU buffer were discarded due to radio reasons.

Data Source

BSC_IOG20_APG40

Source Field

LDISRR

Source Section

CELLGPRS2

LDISRRSUB

Tot nr of times the entire contents of the DL LLC PDU buffer were discarded due to Radio reasons.

Data Source

BSC_IOG20_APG40

Source Field

LDISRRSUB

Source Section

CELLGPRSO

LDISTFI

Tot nr of times the entire contents of the downlink LLC PDU buffer were discarded

Data Source

BSC_IOG20_APG40

Source Field

LDISTFI

Source Section

CELLGPRS2

LLCVOLDLEIT

Volume data in LLC blocks sent for EIT, DL

Data Source

BSC_IOG20_APG40

Source Field

LLCVOLDLEIT

Source Section

CELLEIT2

LLCVOLULEIT

Volume data in LLC blocks sent for EIT, UL

Data Source

BSC_IOG20_APG40

Source Field

LLCVOLULEIT

Source Section

CELLEIT2

LOCEVAL

Accumulated # locating evaluations

Data Source

BSC_IOG20_APG40

Source Field

LOCEVAL

Source Section

CELLHCS

LOLCOMUL

Subcell change attempts and successful subcell change

Data Source

BSC_IOG20_APG40

Source Field

LOLCOMUL

Source Section

CELEVENTSC

LOLSUCUL

Subcell change attempts and successful subcell change

Data Source

BSC_IOG20_APG40

Source Field

LOLSUCUL

Source Section

CELEVENTSC

LSTIME

Accumulated time for load sharing in seconds.

Data Source

BSC_IOG20_APG40

Source Field

LSTIME

Source Section

CELLEVENT

MAXEGTSDL

The Accumulation of maximum possible timeslots for EGPRS DL TBFs scanned for EGPRS capable MSs.

Data Source

BSC_IOG20_APG40

Source Field

MAXEGTSDL

Source Section

TRAFGPRS2

MAXEGTSUL

The accumulation of the maximum reservable timeslots for all UL TBFs scanned, for TBFs in EGPRS mode

Data Source

BSC_IOG20_APG40

Source Field

MAXEGTSUL

Source Section

TRAFGPRS3

MAXGTSDL

The Accumulation of maximum possible timeslots for Basic and GPRS TBFs for all MSs (R11).

Data Source

BSC_IOG20_APG40

Source Field

MAXGTSDL

Source Section

TRAFGPRS2

MAXGTSUL

The accumulation of the maximum reservable timeslots for all UL TBFs scanned, for TBFs in GPRS mode

Data Source

BSC_IOG20_APG40

Source Field

MAXGTSUL

Source Section

TRAFGPRS3

MC19DLACK

Total amount of RLC data volume successfully acknowledged by MSs with an EGPRS mode TBF (MCS-1 to MCS-9)

Data Source

BSC_IOG20_APG40

Source Field

MC19DLACK

Source Section

CELLGPRS2

MC19DLACKSUB

Tot amount of RLC data volume successfully acknowledged by the MSs

Data Source

BSC_IOG20_APG40

Source Field

MC19DLACKSUB

Source Section

CELLGPRSO

MC19DLSCHED

RLC data blocks sent with MSC1-9

Data Source

BSC_IOG20_APG40

Source Field

MC19DLSCHED

Source Section

CELLGPRS2

MC19DLSCHEDSUB

Tot nr of RLC data blocks scheduled by the MAC protocol in the OL subcell only, for MCS-1-9 mode.

Data Source

BSC_IOG20_APG40

Source Field

MC19DLSCHEDSUB

Source Section

CELLGPRSO

MC19QDLACK

Total amount of RLC data volume successfully acknowledged by the MSs from the total RLC data blocks scheduled on the DL, for MCS-1-9 mode. TBFs carrying EIT excluded.

Data Source

BSC_IOG20_APG40

Source Field

MC19QDLACK

Source Section

CELLGPRS2

MC19QDLACKSUB

Total amount of RLC data volume successfully acknowledged by the MSs from the total RLC data blocks scheduled on the DL in the OL subcell only, for MCS 1 9 mode. TBFs carrying EIT excluded. EGPRS RLC data blocks during MCS ramp-up and ramp-down periods excluded.

Data Source

BSC_IOG20_APG40

Source Field

MC19QDLACKSUB

Source Section

CELLGPRSO

MC19QDLSCHED

Total number of RLC data blocks sent for user data or GMM/SM signalling for EGPRS, RLC acknowledged, mode transfers on the downlink (so includes re-transmissions but excludes RLC dummy blocks, RLC/MAC signalling blocks, RLC idle blocks and EGPRS RLC data blocks during MCS ramp-up and ramp-down periods).

Data Source

BSC_IOG20_APG40

Source Field

MC19QDLSCHED

Source Section

CELLGPRS2

MC19QDLSCHEDSUB

Total number of RLC data blocks scheduled on the DL by the MAC protocol in the OL subcell only, for MCS 1 9 mode. TBFs carrying EIT excluded. EGPRS RLC data Blocks during MCS ramp-up and ramp-down periods excluded.

Data Source

BSC_IOG20_APG40

Source Field

MC19QDLSCHEDSUB

Source Section

CELLGPRSO

MC19QULACK

Total amount of RLC data volume successfully received in PCU for scheduled RLC data blocks for MCS-1-9, RLC ack mode UL. TBFs carrying EIT excluded. EGPRS RLC data blocks during MCS ramp-up and ramp-down periods excluded.

Data Source

BSC_IOG20_APG40

Source Field

MC19QULACK

Source Section

CELLGPRS

MC19QULACKSUB

Total amount of RLC data volume successfully received by the PCU from the total RLC data blocks scheduled on the UL in the OL subcell only, for MCS 1 9 mode. TBFs carrying EIT excluded. EGPRS RLC data blocks during MCS ramp-up and ramp-down periods excluded.

Data Source

BSC_IOG20_APG40

Source Field

MC19QULACKSUB

Source Section

CELLGPRSO

MC19QULSCHED

Number of RLC data blocks scheduled by MAC protocol for MCS-1-9 and RLC ack mode, UL. TBFs carrying EIT excluded.

Data Source

BSC_IOG20_APG40

Source Field

MC19QULSCHED

Source Section

CELLGPRS

MC19QULSCHEDSUB

Total number of RLC data blocks scheduled on the UL by the MAC protocol in the OL subcell only, for MCS 1 9 mode. TBFs carrying EIT excluded. EGPRS RLC data blocks during MCS ramp-up and ramp-down periods excluded.

Data Source

BSC_IOG20_APG40

Source Field

MC19QULSCHEDSUB

Source Section

CELLGPRSO

MC19ULACK

Number of retransmitted RLC Data blocks, uplink for EGPRS

Data Source

BSC_IOG20_APG40

Source Field

MC19ULACK

Source Section

CELLGPRS

MC19ULACKSUB

Tot amount RLC data volume succ received by the PCU

Data Source

BSC_IOG20_APG40

Source Field

MC19ULACKSUB

Source Section

CELLGPRSO

MC19ULSCHED

Number of transmitted RLC Data blocks, uplink for EGPRS

Data Source

BSC_IOG20_APG40

Source Field

MC19ULSCHED

Source Section

CELLGPRS

MC19ULSCHEDSUB

Tot nr of RLC data blocks scheduled by the MAC protocol in the OL subcell only, for MCS-1-9 mode.

Data Source

BSC_IOG20_APG40

Source Field

MC19ULSCHEDSUB

Source Section

CELLGPRSO

MEASPOSREQ

Number of 04.31 MEASURE POSITION REQUEST sent to the MS

Data Source

BSC_IOG20_APG40

Source Field

MEASPOSREQ

Source Section

CELLPOS

MEASPOSRESP

Number of 04.31 MEASURE POSITION REQUEST sent to the MS RESPONSE sent to the SMLC

Data Source

BSC_IOG20_APG40

Source Field

MEASPOSRESP

Source Section

CELLPOS

MOVECELLTBF

Number of released TBF's due to move of cell and GPRS support is removed

Data Source

BSC_IOG20_APG40

Source Field

MOVECELLTBF

Source Section

CELLGPRS

MSESTDLTBF

Number of successfully established DL TBFs where at least one data block has been sent and acknowledged

Data Source

BSC_APG40

Source Field

MSESTDLTBF

Source Section

CELLGPRS

MSESTULDTMTBF

Number of UL DTM TBFs where the mobile has stated to send data UL in the TBF.

Data Source

BSC_IOG20_APG40

Source Field

MSESTULDTMTBF

Source Section

CLDTMPER

MSESTULTBF

Number of UL TBFs where the mobile has started to send data UL in the TBF.

Data Source

BSC_IOG20_APG40

Source Field

MSESTULTBF

Source Section

CELLGPRS2

MUTIL12

nr of DL TBFs scanned where 1 out of 2 PDCHs is reserved.

Data Source

BSC_IOG20_APG40

Source Field

MUTIL12

Source Section

TRAFGPRS2

MUTIL12UL

Number of UL TBFs scanned where 1 out of 2 maximum reservable timeslots are reserved.

Data Source

BSC_IOG20_APG40

Source Field

MUTIL12UL

Source Section

TRAFGPRS3

MUTIL13

nr of DL TBFs scanned where 1 out of 3 PDCHs is reserved.

Data Source

BSC_IOG20_APG40

Source Field

MUTIL13

Source Section

TRAFGPRS2

MUTIL13UL

Number of UL TBFs scanned where 1 out of 3 maximum reservable timeslots are reserved.

Data Source

BSC_IOG20_APG40

Source Field

MUTIL13UL

Source Section

TRAFGPRS3

MUTIL14

nr of DL TBFs scanned where 1 out of 4 PDCHs is reserved.

Data Source

BSC_IOG20_APG40

Source Field

MUTIL14

Source Section

TRAFGPRS2

MUTIL14UL

Number of UL TBFs scanned where 1 out of 4 maximum reservable timeslots are reserved.

Data Source

BSC_IOG20_APG40

Source Field

MUTIL14UL

Source Section

TRAFGPRS3

MUTIL15

Number of DL TBFs scanned where 1 out of 5 PDCHs are reserved.

Data Source

BSC_IOG20_APG40

Source Field

MUTIL15

Source Section

TRAFGPRS2

MUTIL22

nr of DL TBFs scanned where 2 out of 2 PDCHs are reserved.

Data Source

BSC_IOG20_APG40

Source Field

MUTIL22

Source Section

TRAFGPRS2

MUTIL22UL

Number of UL TBFs scanned where 2 out of 2 maximum reservable timeslots are reserved.

Data Source

BSC_IOG20_APG40

Source Field

MUTIL22UL

Source Section

TRAFGPRS3

MUTIL23

nr of DL TBFs scanned where 2 out of 3 PDCHs is reserved.

Data Source

BSC_IOG20_APG40

Source Field

MUTIL23

Source Section

TRAFGPRS2

MUTIL23UL

Number of UL TBFs scanned where 2 out of 3 maximum reservable timeslots are reserved.

Data Source

BSC_IOG20_APG40

Source Field

MUTIL23UL

Source Section

TRAFGPRS3

MUTIL24

nr of DL TBFs scanned where 2 out of 4 PDCHs are reserved.

Data Source

BSC_IOG20_APG40

Source Field

MUTIL24

Source Section

TRAFGPRS2

MUTIL24UL

Number of UL TBFs scanned where 2 out of 4 maximum reservable timeslots are reserved.

Data Source

BSC_IOG20_APG40

Source Field

MUTIL24UL

Source Section

TRAFGPRS3

MUTIL25

Number of DL TBFs scanned where 2 out of 5 PDCHs are reserved.

Data Source

BSC_IOG20_APG40

Source Field

MUTIL25

Source Section

TRAFGPRS2

MUTIL33

nr of DL TBFs scanned where 3 out of 3 PDCHs are reserved.

Data Source

BSC_IOG20_APG40

Source Field

MUTIL33

Source Section

TRAFGPRS2

MUTIL33UL

Number of UL TBFs scanned where 3 out of 3 maximum reservable timeslots are reserved.

Data Source

BSC_IOG20_APG40

Source Field

MUTIL33UL

Source Section

TRAFGPRS3

MUTIL34

nr of DL TBFs scanned where 3 out of 4 PDCHs are reserved.

Data Source

BSC_IOG20_APG40

Source Field

MUTIL34

Source Section

TRAFGPRS2

MUTIL34UL

Number of UL TBFs scanned where 3 out of 4 maximum reservable timeslots are reserved.

Data Source

BSC_IOG20_APG40

Source Field

MUTIL34UL

Source Section

TRAFGPRS3

MUTIL35

Number of DL TBFs scanned where 3 out of 5 PDCHs are reserved.

Data Source

BSC_IOG20_APG40

Source Field

MUTIL35

Source Section

TRAFGPRS2

MUTIL44

nr of DL TBFs scanned where 4 out of 4 PDCHs are reserved.

Data Source

BSC_IOG20_APG40

Source Field

MUTIL44

Source Section

TRAFGPRS2

MUTIL44UL

Number of UL TBFs scanned where 4 out of 4 maximum reservable timeslots are reserved.

Data Source

BSC_IOG20_APG40

Source Field

MUTIL44UL

Source Section

TRAFGPRS3

MUTIL45

Number of DL TBFs scanned where 4 out of 5 PDCHs are reserved.

Data Source

BSC_IOG20_APG40

Source Field

MUTIL45

Source Section

TRAFGPRS2

MUTIL55

Number of DL TBFs scanned where 5 out of 5 PDCHs are reserved.

Data Source

BSC_IOG20_APG40

Source Field

MUTIL55

Source Section

TRAFGPRS2

MUTILBASIC

The average multislot utilization for DL TBF mode BASIC.

Data Source

BSC_IOG20_APG40

Source Field

MUTILBASIC

Source Section

TRAFGPRS2

MUTILBASICUL

The average multislot utilization for UL?TBF mode BASIC.

Data Source

BSC_IOG20_APG40

Source Field

MUTILBASICUL

Source Section

TRAFGPRS3

MUTILEGPRS

The average Multislot utilization for DL TBF mode EGPRS.

Data Source

BSC_IOG20_APG40

Source Field

MUTILEGPRS

Source Section

TRAFGPRS2

MUTILEGPRSUL

The average multislot utilization for UL TBF mode EGPRS.

Data Source

BSC_IOG20_APG40

Source Field

MUTILEGPRSUL

Source Section

TRAFGPRS3

MUTILGPRS

The average Multislot utilization for DL TBF mode GPRS.

Data Source

BSC_IOG20_APG40

Source Field

MUTILGPRS

Source Section

TRAFGPRS2

MUTILGPRSUL

The average multislot utilization for UL TBF mode GPRS.

Data Source

BSC_IOG20_APG40

Source Field

MUTILGPRSUL

Source Section

TRAFGPRS3

NAMRABHOSUCFRHR

Number of successful intra cell handovers due to FR to HR channel rate change made at Abis congestion by a mobile not capable of AMR.

Data Source

BSC_IOG20_APG40

Source Field

NAMRABHOSUCFRHR

Source Section

CLRATECHG

NIQLOWCNT

Number of GSM Priority Connections not inserted in the queue when queue is full, due to low ranking

Data Source

BSC_IOG20_APG40

Source Field

NIQLOWCNT

Source Section

CELLMSQ

NIQLOWUTRANCNT

Number of UTRAN priority connections not inserted in to the queue for indicated cell, due to the priority connection has lowest priority and the queue is full.

Data Source

BSC_APG40

Source Field

NIQLOWUTRANCNT

Source Section

CELLMSQ

NOACCOF

Number of accumulations

Data Source

BSC_IOG20_APG40

Source Field

NOACCOF

Source Section

IDLEOTCHF

NOACCOH

nr of accumulations

Data Source

BSC_IOG20_APG40

Source Field

NOACCOH

Source Section

IDLEOTCHH

NOACCUF

Number of accumulations

Data Source

BSC_IOG20_APG40

Source Field

NOACCUF

Source Section

IDLEUTCHF

NOACCUH

nr of accumulations

Data Source

BSC_IOG20_APG40

Source Field

NOACCUH

Source Section

IDLEUTCHH

NONAVFCH

Number of attempts to allocate channels of TCH/F type when no channels of this type are defined

Data Source

BSC_IOG20_APG40

Source Field

NONAVFCH

Source Section

CLTCH

NONAVHCH

Number of attempts to allocate channels of TCH/H type when no channels of this type are defined

Data Source

BSC_IOG20_APG40

Source Field

NONAVHCH

Source Section

CLTCH

NPCALLOCCNT

Number of times a GSM or UTRAN non priority connection allocates a channel in a cell where a queue exists

Data Source

BSC_IOG20_APG40

Source Field

NPCALLOCCNT

Source Section

CELLMSQ

NQPCCNT

Number of Queued GSM Priority Connections

Data Source

BSC_IOG20_APG40

Source Field

NQPCCNT

Source Section

CELLMSQ

NQPCUTRANCNT

Number of queued UTRAN priority connections.

Data Source

BSC_APG40

Source Field

NQPCUTRANCNT

Source Section

CELLMSQ

OLSCLDCOM

Number of subcell change attempts to overlaid subcell due to subcell load distribution

Data Source

BSC_IOG20_APG40

Source Field

OLSCLDCOM

Source Section

CELEVENTSC

OLSCLDSUC

Number of successful subcell change to overlaid subcell due to subcell load distribution.

Data Source

BSC_IOG20_APG40

Source Field

OLSCLDSUC

Source Section

CELEVENTSC

OTHULREL

When an EGPRS/GPRS UL TBF is abnormally released due to all other causes.

Data Source

BSC_IOG20_APG40

Source Field

OTHULREL

Source Section

CELLGPRS3

OVERLOADREJCON

To monitor rejected new connections at packet ABIS overload

Data Source

BSC_APG40

Source Field

OVERLOADREJCON

Source Section

CLTCH

PAGCSBVCI

Number of 08.18 PAGING CS messages to be transmitted on PCH

Data Source

BSC_IOG20_APG40

Source Field

PAGCSBVCI

Source Section

CELLGPRS

PAGCSONPPCH

Total number of 48.018 PAGING CS messages from SGSN to be sent on PPCH.

Data Source

BSC_IOG20_APG40

Source Field

PAGCSONPPCH

Source Section

CELLGPRS2

PAGDISCPPCH

Total number of 48.018 PAGING CS and 48.018 PAGING PS messages to be sent on PPCH and were discarded

Data Source

BSC_IOG20_APG40

Source Field

PAGDISCPPCH

Source Section

CELLGPRS2

PAGETOOOLD

Nr of discarded pages due to age

Data Source

BSC_IOG20_APG40

Source Field

PAGETOOOLD

Source Section

CELLPAG

PAGPCHCONG

Nr of discarded pages due to full Page queue in the BTS

Data Source

BSC_IOG20_APG40

Source Field

PAGPCHCONG

Source Section

CELLPAG

PAGPSONPPCH

Total number of 48.018 PAGING PS messages from SGSN to be sent on PPCH.

Data Source

BSC_IOG20_APG40

Source Field

PAGPSONPPCH

Source Section

CELLGPRS2

PCHALLATT

Number of packet channel allocation attempts

Data Source

BSC_IOG20_APG40

Source Field

PCHALLATT

Source Section

CELLGPRS

PCHALLFAIL

Number of packet channel allocation failures

Data Source

BSC_IOG20_APG40

Source Field

PCHALLFAIL

Source Section

CELLGPRS

PCHROPRETRY

Peak value of the ratio between received Packet Channel Requests with the retry bit set to one and the total number of received Packet Channel Requests on PRACH

Data Source

BSC_IOG20_APG40

Source Field

PCHROPRETRY

Source Section

CELLGPRS2

PCHRREQ

Total number of received Packet Channel Requests.

Data Source

BSC_IOG20_APG40

Source Field

PCHRREQ

Source Section

CELLGPRS2

PCHRSCAN

Scan counter for Packet Channel Request statistics.

Data Source

BSC_IOG20_APG40

Source Field

PCHRSCAN

Source Section

CELLGPRS2

PCHRZRETRY

Number of not retried GPRS and EGPRS packet channel requests.

Data Source

BSC_IOG20_APG40

Source Field

PCHRZRETRY

Source Section

CELLGPRS2

PCHZRETRY

Total number of received MAC headers with retries bit set to zero (first try).

Data Source

BSC_IOG20_APG40

Source Field

PCHZRETRY

Source Section

CELLGPRS2

PDCHDLEGPRS

GPRS Traffic Load counter

Data Source

BSC_IOG20_APG40

Source Field

PDCHDLEGPRS

Source Section

TRAFFGPRS

PDCHDLGPRS

GPRS Traffic Load counter

Data Source

BSC_IOG20_APG40

Source Field

PDCHDLGPRS

Source Section

TRAFFGPRS

PDCHULEGPRS

GPRS Traffic Load counter

Data Source

BSC_IOG20_APG40

Source Field

PDCHULEGPRS

Source Section

TRAFFGPRS

PDCHULGPRS

GPRS Traffic Load counter

Data Source

BSC_IOG20_APG40

Source Field

PDCHULGPRS

Source Section

TRAFFGPRS

PDPRAC

Number of packet data packet random accesses

Data Source

BSC_IOG20_APG40

Source Field

PDPRAC

Source Section

CELLGPRS

PDRAC

Number of packet data random accesses

Data Source

BSC_IOG20_APG40

Source Field

PDRAC

Source Section

CELLGPRS

PERLEN

Period Length

PMTATT

When a pre-emption attempt occurred of a On Demand PDCHs.

Data Source

BSC_IOG20_APG40

Source Field

PMTATT

Source Section

CELLGPRS2

PMTCSABCONG

Number of CS initiated preemptions of Abis path done either by preemption of an idle PDCH or by downgrading of a E-PDCH not carrying any EGPRS traffic from E-PDCH to BPDCH.

Data Source

BSC_IOG20_APG40

Source Field

PMTCSABCONG

Source Section

CELLGPRS3

PMTPSABCONG

Number of PS initiated preemptions of Abis path done either by preemption of an idle PDCH or by downgrading of a E-PDCH not carrying any EGPRS traffic from E-PDCH to BPDCH.

Data Source

BSC_IOG20_APG40

Source Field

PMTPSABCONG

Source Section

CELLGPRS3

PMTREF

When a pre-emption attempt is refused by the PS domain

Data Source

BSC_IOG20_APG40

Source Field

PMTREF

Source Section

CELLGPRS2

PPAGCSBVCI

Number of 08.18 PAGING CS messages to be transmitted on PPCH

Data Source

BSC_IOG20_APG40

Source Field

PPAGCSBVCI

Source Section

CELLGPRS

PREEMPTPDCH

Number of preempted used PDCHs

Data Source

BSC_IOG20_APG40

Source Field

PREEMPTPDCH

Source Section

CELLGPRS

PREEMPTPDCHSUB

Number of preempted used PDCHs in OL subcell.

Data Source

BSC_IOG20_APG40

Source Field

PREEMPTPDCHSUB

Source Section

CELLGPRSO

PREEMPTTBF

Number of released TBF's due to preemption

Data Source

BSC_IOG20_APG40

Source Field

PREEMPTTBF

Source Section

CELLGPRS

PREEMPTULREL

When an EGPRS/GPRS UL TBF is abnormally released due to pre-emption.

Data Source

BSC_IOG20_APG40

Source Field

PREEMPTULREL

Source Section

CELLGPRS2

PREEMTPDCHSUB

Nr of preempted used PDCHs in OL subcell.

Data Source

BSC_IOG20_APG40

Source Field

PREEMTPDCHSUB

Source Section

CELLGPRSO

PREJABISCONG

Number of UL Temporary Block Flows (TBFs) for new MSs that have been rejected on PDCH:s carried on traffic session that have Abis congestion, for Packet Abis.

Data Source

BSC_APG40

Source Field

PREJABISCONG

Source Section

CELLGPRS3

PREJOTH

Tot nr of rejecyed access requests for the reason 'Other'.

Data Source

BSC_IOG20_APG40

Source Field

PREJOTH

Source Section

CELLGPRS2

PREJTFI

Tot nr of rejecyed access requests for the reason 'No PDCH, USF or TFI'.

Data Source

BSC_IOG20_APG40

Source Field

PREJTFI

Source Section

CELLGPRS2

PSCHREQ

Tot nr of access requests successfully received in the PCU on any channel.

Data Source

BSC_IOG20_APG40

Source Field

PSCHREQ

Source Section

CELLGPRS2

PSIMMASS

Number of PS IMMEDIATE ASSIGNMENTS sent on the CCCH.

Data Source

BSC_IOG20_APG40

Source Field

PSIMMASS

Source Section

CCCHLOAD

Q1TDDLEIT

Transfer delay achieved for EIT 0-80% DL

Data Source

BSC_IOG20_APG40

Source Field

Q1TDDLEIT

Source Section

CELLEIT

Q1TDULEIT

Transfer delay achieved for EIT 0-80% UL

Data Source

BSC_IOG20_APG40

Source Field

Q1TDULEIT

Source Section

CELLEIT

Q2TDDLEIT

Transfer delay achieved for EIT 81-95% DL

Data Source

BSC_IOG20_APG40

Source Field

Q2TDDLEIT

Source Section

CELLEIT

Q2TDULEIT

Transfer delay achieved for EIT 81-95% UL

Data Source

BSC_IOG20_APG40

Source Field

Q2TDULEIT

Source Section

CELLEIT

Q3TDDLEIT

Transfer delay achieved for EIT 96-100% DL

Data Source

BSC_IOG20_APG40

Source Field

Q3TDDLEIT

Source Section

CELLEIT

Q3TDULEIT

Transfer delay achieved for EIT 96-100% UL

Data Source

BSC_IOG20_APG40

Source Field

Q3TDULEIT

Source Section

CELLEIT

QOSWDLBASIC

Sum of the QoS weights on each and every DL B-PDCH.

Data Source

BSC_IOG20_APG40

Source Field

QOSWDLBASIC

Source Section

TRAFDLGPRS

QOSWDLEGPRS

Sum of the QoS weights on each and every DL E-PDCH.

Data Source

BSC_IOG20_APG40

Source Field

QOSWDLEGPRS

Source Section

TRAFDLGPRS

QOSWDLGPRS

Sum of the QoS weights on each and every DL G-PDCH.

Data Source

BSC_IOG20_APG40

Source Field

QOSWDLGPRS

Source Section

TRAFDLGPRS

QOSWULBASIC

Sum of the QoS weights on each and every UL B-PDCH.

Data Source

BSC_IOG20_APG40

Source Field

QOSWULBASIC

Source Section

TRAFULGPRS

QOSWULEGPRS

Sum of the QoS weights on each and every UL E-PDCH.

Data Source

BSC_IOG20_APG40

Source Field

QOSWULEGPRS

Source Section

TRAFULGPRS

QOSWULGPRS

Sum of the QoS weights on each and every UL G-PDCH.

Data Source

BSC_IOG20_APG40

Source Field

QOSWULGPRS

Source Section

TRAFULGPRS

QUAL00DL

Quality 0 reported on downlink

Data Source

BSC_IOG20_APG40

Source Field

QUAL00DL

Source Section

CLRXQUAL

QUAL00UL

Quality 0 reported on uplink

Data Source

BSC_IOG20_APG40

Source Field

QUAL00UL

Source Section

CLRXQUAL

QUAL10DL

Quality 1 reported on downlink

Data Source

BSC_IOG20_APG40

Source Field

QUAL10DL

Source Section

CLRXQUAL

QUAL10UL

Quality 1 reported on uplink

Data Source

BSC_IOG20_APG40

Source Field

QUAL10UL

Source Section

CLRXQUAL

QUAL20DL

Quality 2 reported on downlink

Data Source

BSC_IOG20_APG40

Source Field

QUAL20DL

Source Section

CLRXQUAL

QUAL20UL

Quality 2 reported on uplink

Data Source

BSC_IOG20_APG40

Source Field

QUAL20UL

Source Section

CLRXQUAL

QUAL30DL

Quality 3 reported on downlink

Data Source

BSC_IOG20_APG40

Source Field

QUAL30DL

Source Section

CLRXQUAL

QUAL30UL

Quality 3 reported on uplink

Data Source

BSC_IOG20_APG40

Source Field

QUAL30UL

Source Section

CLRXQUAL

QUAL40DL

Quality 4 reported on downlink

Data Source

BSC_IOG20_APG40

Source Field

QUAL40DL

Source Section

CLRXQUAL

QUAL40UL

Quality 4 reported on uplink

Data Source

BSC_IOG20_APG40

Source Field

QUAL40UL

Source Section

CLRXQUAL

QUAL50DL

Quality 5 reported on downlink

Data Source

BSC_IOG20_APG40

Source Field

QUAL50DL

Source Section

CLRXQUAL

QUAL50UL

Quality 5 reported on uplink

Data Source

BSC_IOG20_APG40

Source Field

QUAL50UL

Source Section

CLRXQUAL

QUAL60DL

Quality 6 reported on downlink

Data Source

BSC_IOG20_APG40

Source Field

QUAL60DL

Source Section

CLRXQUAL

QUAL60UL

Quality 6 reported on uplink

Data Source

BSC_IOG20_APG40

Source Field

QUAL60UL

Source Section

CLRXQUAL

QUAL70DL

Quality 7 reported on downlink

Data Source

BSC_IOG20_APG40

Source Field

QUAL70DL

Source Section

CLRXQUAL

QUAL70UL

Quality 7 reported on uplink

Data Source

BSC_IOG20_APG40

Source Field

QUAL70UL

Source Section

CLRXQUAL

RAACCFA

Failed RA Atts

Data Source

BSC_IOG20_APG40

Source Field

RAACCFA

Source Section

RANDOMACC

RAANPAG

RA Atts, answer to paging

Data Source

BSC_IOG20_APG40

Source Field

RAANPAG

Source Section

RANDOMACC

RAAPAG1

RAs, answer to paging Channel needed = TCH/F, MS Capability = Dual Rate

Data Source

BSC_IOG20_APG40

Source Field

RAAPAG1

Source Section

RNDACCEXT

RAAPAG2

RAs, answer to paging Channel needed = TCH/F, MS Capability = Dual Rate

Data Source

BSC_IOG20_APG40

Source Field

RAAPAG2

Source Section

RNDACCEXT

RAAPOPS

RAs, answer to paging or other procedures that can be completed with an SDCCH

Data Source

BSC_IOG20_APG40

Source Field

RAAPOPS

Source Section

RNDACCEXT

RACALR1

RAs, call reestablishment TCH/H was in use and the network sets the NECI bit to 1

Data Source

BSC_IOG20_APG40

Source Field

RACALR1

Source Section

RNDACCEXT

RACALR2

RAs, call reestablishment TCH/H+TCH/H was in use and the network sets the NECI bit to 1

Data Source

BSC_IOG20_APG40

Source Field

RACALR2

Source Section

RNDACCEXT

RACALRE

RA Atts, call reestablishment

Data Source

BSC_IOG20_APG40

Source Field

RACALRE

Source Section

RANDOMACC

RAEMCAL

RA Atts, emergency call

Data Source

BSC_IOG20_APG40

Source Field

RAEMCAL

Source Section

RANDOMACC

RAORDAT

RAs, originating data call from Dual Rate MS when TCH/H is sufficient and the network sets the NECI bit to 1

Data Source

BSC_IOG20_APG40

Source Field

RAORDAT

Source Section

RNDACCEXT

RAORSPE

RAs, originating speech call from Dual Rate MS when TCH/H is sufficient and the network sets the NECI bit to 1

Data Source

BSC_IOG20_APG40

Source Field

RAORSPE

Source Section

RNDACCEXT

RAOSREQ

RA Atts, other service request

Data Source

BSC_IOG20_APG40

Source Field

RAOSREQ

Source Section

RANDOMACC

RAOTHER

RA Atts, all other cases

Data Source

BSC_IOG20_APG40

Source Field

RAOTHER

Source Section

RANDOMACC

RATRHFAANPAG

Random Access counter

Data Source

BSC_IOG20_APG40

Source Field

RATRHFAANPAG

Source Section

RANDOMACC

RATRHFAEMCAL

rejected emergency CHANNEL REQUIRED with establishment cause 'Emergency call' in TRH.

Data Source

BSC_IOG20_APG40

Source Field

RATRHFAEMCAL

Source Section

RANDOMACC

RATRHFAOTHER

rejected normal CHANNEL REQUIRED with all other establishment causes in TRH.

Data Source

BSC_IOG20_APG40

Source Field

RATRHFAOTHER

Source Section

RANDOMACC

RATRHFAREG

rejected registration CHANNEL REQUIRED with establishment cause 'Answer to paging', 'Call reestablishment' and 'Other service request' in TRH

Data Source

BSC_IOG20_APG40

Source Field

RATRHFAREG

Source Section

RANDOMACC

RBCDL

Number of radio block messages, downlink

Data Source

BSC_IOG20_APG40

Source Field

RBCDL

Source Section

CELLGPRS

RBCUL

Number of radio block messages, uplink

Data Source

BSC_IOG20_APG40

Source Field

RBCUL

Source Section

CELLGPRS

REJCSIMMASS

Number of CS IMMEDIATE ASSIGNMENTS REJECT sent on the CCCH.

Data Source

BSC_IOG20_APG40

Source Field

REJCSIMMASS

Source Section

CCCHLOAD

REJPSIMMASS

Number of PS IMMEDIATE ASSIGNMENTS REJECT sent on the CCCH.

Data Source

BSC_IOG20_APG40

Source Field

REJPSIMMASS

Source Section

CCCHLOAD

RETRANSDL

Number of retransmitted radio messages, downlink

Data Source

BSC_IOG20_APG40

Source Field

RETRANSDL

Source Section

CELLGPRS

RETRANSUL

Number of retransmitted radio messages, uplink

Data Source

BSC_IOG20_APG40

Source Field

RETRANSUL

Source Section

CELLGPRS

RLCEDLEITSCHED

No of EIT EGPRS RLC blocks sched. DL. Both first time and re-transmission. Exclude dummy and control blocks.

Data Source

BSC_IOG20_APG40

Source Field

RLCEDLEITSCHED

Source Section

CELLEIT

RLCEDLVOLEIT

Payload data in EGPRS RLC blocks sched.? for EIT, DL. Only first time. Exclude re-transmitted, dummy and control blocks.

Data Source

BSC_IOG20_APG40

Source Field

RLCEDLVOLEIT

Source Section

CELLEIT2

RLCEULEITSCHED

No of EIT EGPRS RLC blocks sched. UL. . Both first time and re-transmission. Exclude dummy and control blocks.

Data Source

BSC_IOG20_APG40

Source Field

RLCEULEITSCHED

Source Section

CELLEIT

RLCEULVOLEIT

Payload data in EGPRS RLC blocks sched.? for EIT, UL. Only first time correctly received.? Exclude re-transmitted, dummy and control blocks.

Data Source

BSC_IOG20_APG40

Source Field

RLCEULVOLEIT

Source Section

CELLEIT2

RLCGDLEITSCHED

No of EIT GPRS RLC blocks sched. DL. Both first time and re-transmission. Exclude dummy and control blocks.

Data Source

BSC_IOG20_APG40

Source Field

RLCGDLEITSCHED

Source Section

CELLEIT

RLCGDLVOLEIT

Payload data in GPRS RLC blocks sched.? for EIT, DL. Only first time. Exclude re-transmitted, dummy and control blocks.

Data Source

BSC_IOG20_APG40

Source Field

RLCGDLVOLEIT

Source Section

CELLEIT2

RLCGULEITSCHED

No of EIT GPRS RLC blocks sched. UL. . Both first time and re-transmission. Exclude dummy and control blocks.

Data Source

BSC_IOG20_APG40

Source Field

RLCGULEITSCHED

Source Section

CELLEIT

RLCGULVOLEIT

Payload data in GPRS RLC blocks sched. for EIT, UL. Only first time correctly received.? Exclude re-transmitted, dummy and control blocks.

Data Source

BSC_IOG20_APG40

Source Field

RLCGULVOLEIT

Source Section

CELLEIT2

RQHIGHCNT

Number of GSM Priority Connections removed from the queue when queue is full due to arrival of a higher ranked UTRAN or GSM Priority Connection

Data Source

BSC_IOG20_APG40

Source Field

RQHIGHCNT

Source Section

CELLMSQ

RQHIUTRANCNT

Number of UTRAN calls removed from the queue due to arrival of higher ranked GSM or UTRAN priority connection.

Data Source

BSC_APG40

Source Field

RQHIUTRANCNT

Source Section

CELLMSQ

RQLOSSCNT

Number of GSM or UTRAN Priority Connections released from the queue due to loss of radio contact with MSor because then Service User abandon the call

Data Source

BSC_IOG20_APG40

Source Field

RQLOSSCNT

Source Section

CELLMSQ

RQLOSSUTRANCNT

Number of UTRAN priority connections released from the queue, due to CLEAR COMMAND received from MSC.

Data Source

BSC_APG40

Source Field

RQLOSSUTRANCNT

Source Section

CELLMSQ

RQT11CNT

Number of GSM Priority Connections that have been removed from a queue due to timeout of GSM queuing timer T11

Data Source

BSC_IOG20_APG40

Source Field

RQT11CNT

Source Section

CELLMSQ

RQTQHOCNT

Number of UTRAN priority connections removed from queue due to time-out of UTRAN queuing timer (TQHO)

Data Source

BSC_APG40

Source Field

RQTQHOCNT

Source Section

CELLMSQ

SAICSCAN

Number of accumulations of traffic level accumulator for SAIC capable MSs.

Data Source

BSC_IOG20_APG40

Source Field

SAICSCAN

Source Section

CELLMSCAP

SAICTRALACC

Traffic level accumulator for SAIC capable MSs

Data Source

BSC_IOG20_APG40

Source Field

SAICTRALACC

Source Section

CELLMSCAP

SCLDCOMUL

Subcell change attempts and successful subcell change

Data Source

BSC_IOG20_APG40

Source Field

SCLDCOMUL

Source Section

CELEVENTSC

SCLDSUCUL

Subcell change attempts and successful subcell change

Data Source

BSC_IOG20_APG40

Source Field

SCLDSUCUL

Source Section

CELEVENTSC

State

Cell state (active or halted). Derived from CNA export

Data Source

CNA

Source Field

HALTED

Source Section

CELLCONFIG

STRBPDCH

Accumulates the nr of Streaming PDCHs of B-GPRS reservad in DL TBFs each scan interval.

Data Source

BSC_IOG20_APG40

Source Field

STRBPDCH

Source Section

TRAFDLGPRS

STREPDCH

Accumulates the nr of Streaming PDCHs of EGPRS reservad in DL TBFs each scan interval.

Data Source

BSC_IOG20_APG40

Source Field

STREPDCH

Source Section

TRAFDLGPRS

STRGPDCH

Accumulates the nr of Streaming PDCHs of GPRS reservad in DL TBFs each scan interval.

Data Source

BSC_IOG20_APG40

Source Field

STRGPDCH

Source Section

TRAFDLGPRS

SUCAMRLDHRFRHO

Number of successful intra cell handovers, due to HR to FR channel rate change triggered by low cell load and low Abis load, for AMR/HR calls

Data Source

BSC_APG40

Source Field

SUCAMRLDHRFRHO

Source Section

CLRATECHG

SUCNAMRLDHRFRHO

Number of successful intra cell handovers, due to HR to FR channel rate change triggered by low cell load and low Abis load, for NON AMR/HR calls

Data Source

BSC_APG40

Source Field

SUCNAMRLDHRFRHO

Source Section

CLRATECHG

TACCSCAN0

Number of scans taken for traffic level accumulators in CHGRP0

Data Source

BSC_IOG20_APG40

Source Field

TACCSCAN0

Source Section

CHGRP0F

TAF1DLFER

Number of FER occurrences in the range 0-FERTHR1, for codec type AMR FR, DL.

Data Source

BSC_IOG20_APG40

Source Field

TAF1DLFER

Source Section

CELLAFFER

TAF1DLSUBFER

Number of FER occurrences in the range 0-FERTHR1, for codec type AMR FR, overlaid subcell DL.

Data Source

BSC_IOG20_APG40

Source Field

TAF1DLSUBFER

Source Section

CELLAFFER

TAF1ULFER

Number of FER occurrences in the range 0-FERTHR1, for codec type AMR FR, UL.

Data Source

BSC_IOG20_APG40

Source Field

TAF1ULFER

Source Section

CELLAFFER

TAF1ULSUBFER

Number of FER occurrences in the range 0-FERTHR1, for codec type AMR FR, overlaid subcell UL.

Data Source

BSC_IOG20_APG40

Source Field

TAF1ULSUBFER

Source Section

CELLAFFER

TAF2DLFER

Number of FER occurrences in the rangeFERTHR1-FERTHR2, for codec type AMR FR,DL.

Data Source

BSC_IOG20_APG40

Source Field

TAF2DLFER

Source Section

CELLAFFER

TAF2DLSUBFER

Number of FER occurrences in the range FERTHR1-FERTHR2, for codec type AMR FR, overlaid subcell DL.

Data Source

BSC_IOG20_APG40

Source Field

TAF2DLSUBFER

Source Section

CELLAFFER

TAF2ULFER

Number of FER occurrences in the range FERTHR1-FERTHR2, for codec type AMR FR,UL.

Data Source

BSC_IOG20_APG40

Source Field

TAF2ULFER

Source Section

CELLAFFER

TAF2ULSUBFER

Number of FER occurrences in the range FERTHR1-FERTHR2, for codec type AMR FR, overlaid subcell UL.

Data Source

BSC_IOG20_APG40

Source Field

TAF2ULSUBFER

Source Section

CELLAFFER

TAF3DLFER

Number of FER occurrences in the rangeFERTHR2-FERTHR3, for codec type AMR FR,DL.

Data Source

BSC_IOG20_APG40

Source Field

TAF3DLFER

Source Section

CELLAFFER

TAF3DLSUBFER

Number of FER occurrences in the range FERTHR2-FERTHR3, for codec type AMR FR, overlaid subcell DL.

Data Source

BSC_IOG20_APG40

Source Field

TAF3DLSUBFER

Source Section

CELLAFFER

TAF3ULFER

Number of FER occurrences in the range FERTHR2-FERTHR3, for codec type AMR FR,UL.

Data Source

BSC_IOG20_APG40

Source Field

TAF3ULFER

Source Section

CELLAFFER

TAF3ULSUBFER

Number of FER occurrences in the range FERTHR2-FERTHR3, for codec type AMR FR, overlaid subcell UL.

Data Source

BSC_IOG20_APG40

Source Field

TAF3ULSUBFER

Source Section

CELLAFFER

TAF4DLFER

Number of FER occurrences in the rangeFERTHR3-FERTHR4, for codec type AMR FR,DL.

Data Source

BSC_IOG20_APG40

Source Field

TAF4DLFER

Source Section

CELLAFFER

TAF4DLSUBFER

Number of FER occurrences in the range FERTHR3-FERTHR4, for codec type AMR FR, overlaid subcell DL.

Data Source

BSC_IOG20_APG40

Source Field

TAF4DLSUBFER

Source Section

CELLAFFER

TAF4ULFER

Number of FER occurrences in the range FERTHR3-FERTHR4, for codec type AMR FR,UL.

Data Source

BSC_IOG20_APG40

Source Field

TAF4ULFER

Source Section

CELLAFFER

TAF4ULSUBFER

Number of FER occurrences in the rangeFERTHR3-FERTHR4, for codec type AMR FR,overlaid subcell UL.

Data Source

BSC_IOG20_APG40

Source Field

TAF4ULSUBFER

Source Section

CELLAFFER

TAF5DLFER

Number of FER occurrences in the range FERTHR4-96, for codec type AMR FR, DL.

Data Source

BSC_IOG20_APG40

Source Field

TAF5DLFER

Source Section

CELLAFFER

TAF5DLSUBFER

Number of FER occurrences in the range FERTHR4-96, for codec type AMR FR,overlaid subcell DL.

Data Source

BSC_IOG20_APG40

Source Field

TAF5DLSUBFER

Source Section

CELLAFFER

TAF5ULFER

Number of FER occurrences in the range FERTHR4-96, for codec type AMR FR, UL.

Data Source

BSC_IOG20_APG40

Source Field

TAF5ULFER

Source Section

CELLAFFER

TAF5ULSUBFER

Number of FER occurrences in the range FERTHR4-96, for codec type AMR FR, overlaid subcell UL.

Data Source

BSC_IOG20_APG40

Source Field

TAF5ULSUBFER

Source Section

CELLAFFER

TAH1DLFER

Number of FER occurrences in the range 0- FERTHR1, for codec type AMR HR, DL.

Data Source

BSC_IOG20_APG40

Source Field

TAH1DLFER

Source Section

CELLAHFER

TAH1DLSUBFER

Number of FER occurrences in the range 0- FERTHR1, for codec type AMR HR, overlaid subcell DL.

Data Source

BSC_IOG20_APG40

Source Field

TAH1DLSUBFER

Source Section

CELLAHFER

TAH1ULFER

Number of FER occurrences in the range 0-FERTHR1, for codec type AMR HR, UL.

Data Source

BSC_IOG20_APG40

Source Field

TAH1ULFER

Source Section

CELLAHFER

TAH1ULSUBFER

Number of FER occurrences in the range 0- FERTHR1, for codec type AMR HR, overlaid subcell UL.

Data Source

BSC_IOG20_APG40

Source Field

TAH1ULSUBFER

Source Section

CELLAHFER

TAH2DLFER

Number of FER occurrences in the range FERTHR1-FERTHR2, for codec type AMR HR, DL.

Data Source

BSC_IOG20_APG40

Source Field

TAH2DLFER

Source Section

CELLAHFER

TAH2DLSUBFER

Number of FER occurrences in the range FERTHR1-FERTHR2, for codec type AMR HR, overlaid subcell DL.

Data Source

BSC_IOG20_APG40

Source Field

TAH2DLSUBFER

Source Section

CELLAHFER

TAH2ULFER

Number of FER occurrences in the range FERTHR1-FERTHR2, for codec type AMR HR, UL.

Data Source

BSC_IOG20_APG40

Source Field

TAH2ULFER

Source Section

CELLAHFER

TAH2ULSUBFER

Number of FER occurrences in the range FERTHR1-FERTHR2, for codec type AMR HR, overlaid subcell UL.

Data Source

BSC_IOG20_APG40

Source Field

TAH2ULSUBFER

Source Section

CELLAHFER

TAH3DLFER

Number of FER occurrences in the range FERTHR2-FERTHR3, for codec type AMR HR, DL.

Data Source

BSC_IOG20_APG40

Source Field

TAH3DLFER

Source Section

CELLAHFER

TAH3DLSUBFER

Number of FER occurrences in the range FERTHR2-FERTHR3, for codec type AMR HR, overlaid subcell DL.

Data Source

BSC_IOG20_APG40

Source Field

TAH3DLSUBFER

Source Section

CELLAHFER

TAH3ULFER

Number of FER occurrences in the range FERTHR2-FERTHR3, for codec type AMR HR, UL.

Data Source

BSC_IOG20_APG40

Source Field

TAH3ULFER

Source Section

CELLAHFER

TAH3ULSUBFER

Number of FER occurrences in the range FERTHR2-FERTHR3, for codec type AMR HR, overlaid subcell UL.

Data Source

BSC_IOG20_APG40

Source Field

TAH3ULSUBFER

Source Section

CELLAHFER

TAH4DLFER

Number of FER occurrences in the range FERTHR3-FERTHR4, for codec type AMR HR, DL.

Data Source

BSC_IOG20_APG40

Source Field

TAH4DLFER

Source Section

CELLAHFER

TAH4DLSUBFER

Number of FER occurrences in the range FERTHR3-FERTHR4, for codec type AMR HR, overlaid subcell DL.

Data Source

BSC_IOG20_APG40

Source Field

TAH4DLSUBFER

Source Section

CELLAHFER

TAH4ULFER

Number of FER occurrences in the range FERTHR3-FERTHR4, for codec type AMR HR, UL.

Data Source

BSC_IOG20_APG40

Source Field

TAH4ULFER

Source Section

CELLAHFER

TAH4ULSUBFER

Number of FER occurrences in the range FERTHR3-FERTHR4, for codec type AMR HR, overlaid subcell UL.

Data Source

BSC_IOG20_APG40

Source Field

TAH4ULSUBFER

Source Section

CELLAHFER

TAH5DLFER

Number of FER occurrences in the range FERTHR4-96, for codec type AMR HR, DL.

Data Source

BSC_IOG20_APG40

Source Field

TAH5DLFER

Source Section

CELLAHFER

TAH5DLSUBFER

Number of FER occurrences in the range FERTHR4-96, for codec type AMR HR, overlaid subcell DL.

Data Source

BSC_IOG20_APG40

Source Field

TAH5DLSUBFER

Source Section

CELLAHFER

TAH5ULFER

Number of FER occurrences in the range FERTHR4-96, for codec type AMR HR, UL.

Data Source

BSC_IOG20_APG40

Source Field

TAH5ULFER

Source Section

CELLAHFER

TAH5ULSUBFER

Number of FER occurrences in the range FERTHR4-96, for codec type AMR HR, overlaid subcell UL.

Data Source

BSC_IOG20_APG40

Source Field

TAH5ULSUBFER

Source Section

CELLAHFER

TAOLCOMUL

Subcell change attempts and successful subcell change

Data Source

BSC_IOG20_APG40

Source Field

TAOLCOMUL

Source Section

CELEVENTSC

TAOLSUCUL

Subcell change attempts and successful subcell change

Data Source

BSC_IOG20_APG40

Source Field

TAOLSUCUL

Source Section

CELEVENTSC

TASSALL

Number of assignment attempts to a TCH.

Data Source

BSC_IOG20_APG40

Source Field

TASSALL

Source Section

CLTCH

TASSATT

Number of assignment attempts on TCH.

Data Source

BSC_IOG20_APG40

Source Field

TASSATT

Source Section

CLTCH

TASSATTVGCS

Number of attempts for VGCS call set-ups in the cell

Data Source

BSC_IOG20_APG40

Source Field

TASSATTVGCS

Source Section

CLVGCSEST

TASSMS5

Assignment attempts for MS power class 5.

Data Source

BSC_IOG20_APG40

Source Field

TASSMS5

Source Section

CLTCH

TASSSUCVGCS

Number of successful VGCS call set-ups in the cell

Data Source

BSC_IOG20_APG40

Source Field

TASSSUCVGCS

Source Section

CLVGCSEST

TAVAACC

Available Channels Accum (period 1/10th second)

Data Source

BSC_IOG20_APG40

Source Field

TAVAACC

Source Section

CLTCH

TAVAACC0

Number of available TCHs accumulated.

Data Source

BSC_IOG20_APG40

Source Field

TAVAACC0

Source Section

CHGRP0F

TAVASCAN

Acc of available Channels CNT (inc 1/10th second)

Data Source

BSC_IOG20_APG40

Source Field

TAVASCAN

Source Section

CLTCH

TAVASCANSUB

Number of accumulations of available BPCs for traffic channels for subcell

Data Source

BSC_IOG20_APG40

Source Field

TAVASCANSUB

Source Section

CLTCH

TAVASUB

Available BPCs for traffic channels accumulator for overlaid subcell

Data Source

BSC_IOG20_APG40

Source Field

TAVASUB

Source Section

CLTCH

TAW1DLFER

Number of FER occurrences in the range 0-FERTHR1, DL, in the cell (or underlaid subcell)

Data Source

BSC_APG40

Source Field

TAW1DLFER

Source Section

CELLAWFER

TAW1DLSUBFER

Number of FER occurrences in the range 0-FERTHR1, DL, in the OL subcell

Data Source

BSC_APG40

Source Field

TAW1DLSUBFER

Source Section

CELLAWFER

TAW1ULFER

Number of FER occurrences in the range 0-FERTHR1, UL, in the cell (or underlaid subcell)

Data Source

BSC_APG40

Source Field

TAW1ULFER

Source Section

CELLAWFER

TAW1ULSUBFER

Number of FER occurrences in the range 0- FERTHR1, UL, in the OL subcell

Data Source

BSC_APG40

Source Field

TAW1ULSUBFER

Source Section

CELLAWFER

TAW2DLFER

Number of FER occurrences in the range FERTHR1- FERTHR2, DL, in the cell (or underlaid subcell)

Data Source

BSC_APG40

Source Field

TAW2DLFER

Source Section

CELLAWFER

TAW2DLSUBFER

Number of FER occurrences in the range FERTHR1- FERTHR2, DL, in the OL subcell

Data Source

BSC_APG40

Source Field

TAW2DLSUBFER

Source Section

CELLAWFER

TAW2ULFER

Number of FER occurrences in the range FERTHR1- FERTHR2, UL, in the cell (or underlaid subcell)

Data Source

BSC_APG40

Source Field

TAW2ULFER

Source Section

CELLAWFER

TAW2ULSUBFER

Number of FER occurrences in the range FERTHR1- FERTHR2, UL, in the OL subcell

Data Source

BSC_APG40

Source Field

TAW2ULSUBFER

Source Section

CELLAWFER

TAW3DLFER

Number of FER occurrences in the range FERTHR2- FERTHR3, DL, in the cell (or underlaid subcell)

Data Source

BSC_APG40

Source Field

TAW3DLFER

Source Section

CELLAWFER

TAW3DLSUBFER

Number of FER occurrences in the range FERTHR2- FERTHR3, DL, in the OL subcell

Data Source

BSC_APG40

Source Field

TAW3DLSUBFER

Source Section

CELLAWFER

TAW3ULFER

Number of FER occurrences in the range FERTHR2- FERTHR3, UL, in the cell (or underlaid subcell)

Data Source

BSC_APG40

Source Field

TAW3ULFER

Source Section

CELLAWFER

TAW3ULSUBFER

Number of FER occurrences in the range FERTHR2- FERTHR3, UL, in the OL subcell

Data Source

BSC_APG40

Source Field

TAW3ULSUBFER

Source Section

CELLAWFER

TAW4DLFER

Number of FER occurrences in the range FERTHR3- FERTHR4, DL, in the cell (or underlaid subcell)

Data Source

BSC_APG40

Source Field

TAW4DLFER

Source Section

CELLAWFER

TAW4DLSUBFER

Number of FER occurrences in the range FERTHR3- FERTHR4, DL, in the OL subcell

Data Source

BSC_APG40

Source Field

TAW4DLSUBFER

Source Section

CELLAWFER

TAW4ULFER

Number of FER occurrences in the range FERTHR3- FERTHR4, UL, in the cell (or underlaid subcell)

Data Source

BSC_APG40

Source Field

TAW4ULFER

Source Section

CELLAWFER

TAW4ULSUBFER

Number of FER occurrences in the range FERTHR3- FERTHR4, UL, in the OL subcell

Data Source

BSC_APG40

Source Field

TAW4ULSUBFER

Source Section

CELLAWFER

TAW5DLFER

Number of FER occurrences in the range FERTHR3- FERTHR4, DL, in the cell (or underlaid subcell)

Data Source

BSC_APG40

Source Field

TAW5DLFER

Source Section

CELLAWFER

TAW5DLSUBFER

Number of FER occurrences in the range FERTHR4-96, DL, in the OL subcell

Data Source

BSC_APG40

Source Field

TAW5DLSUBFER

Source Section

CELLAWFER

TAW5ULFER

Number of FER occurrences in the range FERTHR4- 96, UL, in the cell (or underlaid subcell)

Data Source

BSC_APG40

Source Field

TAW5ULFER

Source Section

CELLAWFER

TAW5ULSUBFER

Number of FER occurrences in the range FERTHR4-96, UL, in the OL subcell

Data Source

BSC_APG40

Source Field

TAW5ULSUBFER

Source Section

CELLAWFER

TBFDLEGPRS

nr of simultaneous DL TBF for EGPRS in a cell.

Data Source

BSC_IOG20_APG40

Source Field

TBFDLEGPRS

Source Section

TRAFDLGPRS

TBFDLEGPRS_TRAFFGPRS

GPRS Traffic Load counter

Data Source

BSC_IOG20_APG40

Source Field

TBFDLEGPRS

Source Section

TRAFFGPRS

TBFDLEGPRSCAP

When an EGPRS DL TBF is found.

Data Source

BSC_IOG20_APG40

Source Field

TBFDLEGPRSCAP

Source Section

TRAFGPRS2

TBFDLGPRS

nr of simultaneous DL TBF for GPRS in a cell.

Data Source

BSC_IOG20_APG40

Source Field

TBFDLGPRS

Source Section

TRAFDLGPRS

TBFDLGPRS_TRAFFGPRS

GPRS Traffic Load counter

Data Source

BSC_IOG20_APG40

Source Field

TBFDLGPRS

Source Section

TRAFFGPRS

TBFDLGPRSCAP

When a GPRS DL TBF is found.

Data Source

BSC_IOG20_APG40

Source Field

TBFDLGPRSCAP

Source Section

TRAFGPRS2

TBFPDLEGPRS

GPRS Traffic Load counter

Data Source

BSC_IOG20_APG40

Source Field

TBFPDLEGPRS

Source Section

TRAFFGPRS

TBFPDLGPRS

GPRS Traffic Load counter

Data Source

BSC_IOG20_APG40

Source Field

TBFPDLGPRS

Source Section

TRAFFGPRS

TBFPREEMPEST

Average time between a TBF release due to PDCH preemption and a successful TBF establishment

Data Source

BSC_IOG20_APG40

Source Field

TBFPREEMPEST

Source Section

CELLGPRS

TBFPULEGPRS

GPRS Traffic Load counter

Data Source

BSC_IOG20_APG40

Source Field

TBFPULEGPRS

Source Section

TRAFFGPRS

TBFPULGPRS

GPRS Traffic Load counter

Data Source

BSC_IOG20_APG40

Source Field

TBFPULGPRS

Source Section

TRAFFGPRS

TBFULEGPRS

nr of simultaneous UL TBF for EGPRS in a cell.

Data Source

BSC_IOG20_APG40

Source Field

TBFULEGPRS

Source Section

TRAFULGPRS

TBFULEGPRS_TRAFFGPRS

GPRS Traffic Load counter

Data Source

BSC_IOG20_APG40

Source Field

TBFULEGPRS

Source Section

TRAFFGPRS

TBFULEGPRSCAP

When a UL EGPRS TBF is found.

Data Source

BSC_IOG20_APG40

Source Field

TBFULEGPRSCAP

Source Section

TRAFGPRS3

TBFULGPRS

nr of simultaneous UL TBF for GPRS in a cell.

Data Source

BSC_IOG20_APG40

Source Field

TBFULGPRS

Source Section

TRAFULGPRS

TBFULGPRS_TRAFFGPRS

GPRS Traffic Load counter

Data Source

BSC_IOG20_APG40

Source Field

TBFULGPRS

Source Section

TRAFFGPRS

TBFULGPRSCAP

When a UL GPRS TBF is found.

Data Source

BSC_IOG20_APG40

Source Field

TBFULGPRSCAP

Source Section

TRAFGPRS3

TBFUPS

nr of times a Streaming TBF has been successfully upgraded.

Data Source

BSC_IOG20_APG40

Source Field

TBFUPS

Source Section

CLQOSSCON2

TCASSALL

Assignment attempts for MS power class 5 (R10).

Data Source

BSC_IOG20_APG40

Source Field

TCASSALL

Source Section

CLTCH

TCHSIG

TCH Connections for Signalling

Data Source

BSC_IOG20_APG40

Source Field

TCHSIG

Source Section

CLTCH

TDTMALLOCATT

Number of channel allocation attempt.

Data Source

BSC_IOG20_APG40

Source Field

TDTMALLOCATT

Source Section

CLDTMEST

TDTMATT

Number of attempts to establish a DTM connection in the cell

Data Source

BSC_IOG20_APG40

Source Field

TDTMATT

Source Section

CLDTMEST

TDWNACC

Cell downtime accumulator

Data Source

BSC_IOG20_APG40

Source Field

TDWNACC

Source Section

DOWNTIME

TDWNSCAN

Number of accumulations of Cell downtime (period 1/10th second)

Data Source

BSC_IOG20_APG40

Source Field

TDWNSCAN

Source Section

DOWNTIME

TEF1DLFER

Number of FER occurrences in the range 0- FERTHR1, for codec type EFR, DL.

Data Source

BSC_IOG20_APG40

Source Field

TEF1DLFER

Source Section

CELLEFFER

TEF1DLSUBFER

Number of FER occurrences in the range 0- FERTHR1, for codec type EFR, overlaid subcell DL.

Data Source

BSC_IOG20_APG40

Source Field

TEF1DLSUBFER

Source Section

CELLEFFER

TEF1ULFER

Number of FER occurrences in the range 0- FERTHR1, for codec type EFR, UL.

Data Source

BSC_IOG20_APG40

Source Field

TEF1ULFER

Source Section

CELLEFFER

TEF1ULSUBFER

Number of FER occurrences in the range 0- FERTHR1, for codec type EFR, overlaid subcell UL.

Data Source

BSC_IOG20_APG40

Source Field

TEF1ULSUBFER

Source Section

CELLEFFER

TEF2DLFER

Number of FER occurrences in the range FERTHR1-FERTHR2, for codec type EFR, DL.

Data Source

BSC_IOG20_APG40

Source Field

TEF2DLFER

Source Section

CELLEFFER

TEF2DLSUBFER

Number of FER occurrences in the range FERTHR1-FERTHR2, for codec type EFR, overlaid subcell DL.

Data Source

BSC_IOG20_APG40

Source Field

TEF2DLSUBFER

Source Section

CELLEFFER

TEF2ULFER

Number of FER occurrences in the range FERTHR1-FERTHR2, for codec type EFR, UL.

Data Source

BSC_IOG20_APG40

Source Field

TEF2ULFER

Source Section

CELLEFFER

TEF2ULSUBFER

Number of FER occurrences in the range FERTHR1-FERTHR2, for codec type EFR, overlaid subcell UL.

Data Source

BSC_IOG20_APG40

Source Field

TEF2ULSUBFER

Source Section

CELLEFFER

TEF3DLFER

Number of FER occurrences in the range FERTHR2-FERTHR3, for codec type EFR, DL.

Data Source

BSC_IOG20_APG40

Source Field

TEF3DLFER

Source Section

CELLEFFER

TEF3DLSUBFER

Number of FER occurrences in the range FERTHR2-FERTHR3, for codec type EFR, overlaid subcell DL.

Data Source

BSC_IOG20_APG40

Source Field

TEF3DLSUBFER

Source Section

CELLEFFER

TEF3ULFER

Number of FER occurrences in the range FERTHR2-FERTHR3, for codec type EFR, UL.

Data Source

BSC_IOG20_APG40

Source Field

TEF3ULFER

Source Section

CELLEFFER

TEF3ULSUBFER

Number of FER occurrences in the range FERTHR2-FERTHR3, for codec type EFR, overlaid subcell UL.

Data Source

BSC_IOG20_APG40

Source Field

TEF3ULSUBFER

Source Section

CELLEFFER

TEF4DLFER

Number of FER occurrences in the range FERTHR3-FERTHR4, for codec type EFR, DL.

Data Source

BSC_IOG20_APG40

Source Field

TEF4DLFER

Source Section

CELLEFFER

TEF4DLSUBFER

Number of FER occurrences in the range FERTHR3-FERTHR4, for codec type EFR, overlaid subcell DL.

Data Source

BSC_IOG20_APG40

Source Field

TEF4DLSUBFER

Source Section

CELLEFFER

TEF4ULFER

Number of FER occurrences in the range FERTHR3-FERTHR4, for codec type EFR, UL.

Data Source

BSC_IOG20_APG40

Source Field

TEF4ULFER

Source Section

CELLEFFER

TEF4ULSUBFER

Number of FER occurrences in the range FERTHR3-FERTHR4, for codec type EFR, overlaid subcell UL.

Data Source

BSC_IOG20_APG40

Source Field

TEF4ULSUBFER

Source Section

CELLEFFER

TEF5DLFER

Number of FER occurrences in the range FERTHR4-96, for codec type EFR, DL.

Data Source

BSC_IOG20_APG40

Source Field

TEF5DLFER

Source Section

CELLEFFER

TEF5DLSUBFER

Number of FER occurrences in the range FERTHR4-96, for codec type EFR, overlaid subcell DL.

Data Source

BSC_IOG20_APG40

Source Field

TEF5DLSUBFER

Source Section

CELLEFFER

TEF5ULFER

Number of FER occurrences in the range FERTHR4-96, for codec type EFR, UL.

Data Source

BSC_IOG20_APG40

Source Field

TEF5ULFER

Source Section

CELLEFFER

TEF5ULSUBFER

Number of FER occurrences in the range FERTHR4-96, for codec type EFR, overlaid subcell UL.

Data Source

BSC_IOG20_APG40

Source Field

TEF5ULSUBFER

Source Section

CELLEFFER

TF1DLFER

Number of FER occurrences in the range 0- FERTHR1, for codec type FR, DL.

Data Source

BSC_IOG20_APG40

Source Field

TF1DLFER

Source Section

CELLFFER

TF1DLSUBFER

Number of FER occurrences in the range 0-FERTHR1, for codec type FR, overlaid subcell DL.

Data Source

BSC_IOG20_APG40

Source Field

TF1DLSUBFER

Source Section

CELLFFER

TF1ULFER

Number of FER occurrences in the range 0- FERTHR1, for codec type FR, UL.

Data Source

BSC_IOG20_APG40

Source Field

TF1ULFER

Source Section

CELLFFER

TF1ULSUBFER

Number of FER occurrences in the range 0-FERTHR1, for codec type FR, overlaid subcell,UL.

Data Source

BSC_IOG20_APG40

Source Field

TF1ULSUBFER

Source Section

CELLFFER

TF2DLFER

Number of FER occurrences in the range FERTHR1-FERTHR2, for codec type FR, DL.

Data Source

BSC_IOG20_APG40

Source Field

TF2DLFER

Source Section

CELLFFER

TF2DLSUBFER

Number of FER occurrences in the range FERTHR1-FERTHR2, for codec type FR, overlaid subcell DL.

Data Source

BSC_IOG20_APG40

Source Field

TF2DLSUBFER

Source Section

CELLFFER

TF2ULFER

Number of FER occurrences in the rangeFERTHR1-FERTHR2, for codec type FR, UL.

Data Source

BSC_IOG20_APG40

Source Field

TF2ULFER

Source Section

CELLFFER

TF2ULSUBFER

Number of FER occurrences in the range FERTHR1-FERTHR2, for codec type FR,overlaid subcell UL.

Data Source

BSC_IOG20_APG40

Source Field

TF2ULSUBFER

Source Section

CELLFFER

TF3DLFER

Number of FER occurrences in the range FERTHR2-FERTHR3, for codec type FR, DL.

Data Source

BSC_IOG20_APG40

Source Field

TF3DLFER

Source Section

CELLFFER

TF3DLSUBFER

Number of FER occurrences in the range FERTHR2-FERTHR3, for codec type FR, overlaid subcell DL.

Data Source

BSC_IOG20_APG40

Source Field

TF3DLSUBFER

Source Section

CELLFFER

TF3ULFER

Number of FER occurrences in the rangeFERTHR2-FERTHR3, for codec type FR, UL.

Data Source

BSC_IOG20_APG40

Source Field

TF3ULFER

Source Section

CELLFFER

TF3ULSUBFER

Number of FER occurrences in the range FERTHR2-FERTHR3, for codec type FR, overlaid subcell UL.

Data Source

BSC_IOG20_APG40

Source Field

TF3ULSUBFER

Source Section

CELLFFER

TF4DLFER

Number of FER occurrences in the range FERTHR3-FERTHR4, for codec type FR, DL.

Data Source

BSC_IOG20_APG40

Source Field

TF4DLFER

Source Section

CELLFFER

TF4DLSUBFER

Number of FER occurrences in the range FERTHR3-FERTHR4, for codec type FR, overlaid subcell DL.

Data Source

BSC_IOG20_APG40

Source Field

TF4DLSUBFER

Source Section

CELLFFER

TF4ULFER

Number of FER occurrences in the rangeFERTHR3-FERTHR4, for codec type FR, UL.

Data Source

BSC_IOG20_APG40

Source Field

TF4ULFER

Source Section

CELLFFER

TF4ULSUBFER

Number of FER occurrences in the range FERTHR3-FERTHR4, for codec type FR, overlaid subcell UL.

Data Source

BSC_IOG20_APG40

Source Field

TF4ULSUBFER

Source Section

CELLFFER

TF5DLFER

Number of FER occurrences in the range FERTHR4-96, for codec type FR, DL.

Data Source

BSC_IOG20_APG40

Source Field

TF5DLFER

Source Section

CELLFFER

TF5DLSUBFER

Number of FER occurrences in the range FERTHR4-96, for codec type FR, overlaid subcell DL.

Data Source

BSC_IOG20_APG40

Source Field

TF5DLSUBFER

Source Section

CELLFFER

TF5ULFER

Number of FER occurrences in the rangeFERTHR4-96, for codec type FR, UL.

Data Source

BSC_IOG20_APG40

Source Field

TF5ULFER

Source Section

CELLFFER

TF5ULSUBFER

Number of FER occurrences in the range FERTHR4-96, for codec type FR, overlaid subcell UL.

Data Source

BSC_IOG20_APG40

Source Field

TF5ULSUBFER

Source Section

CELLFFER

TFCALLS

Call attempt counter

Data Source

BSC_IOG20_APG40

Source Field

TFCALLS

Source Section

CELTCHF

TFCALLSSUB

Call attempt counter for overlaid subcell

Data Source

BSC_IOG20_APG40

Source Field

TFCALLSSUB

Source Section

CELTCHF

TFCASSALL

Number of assignment complete to TCH/FRs.

Data Source

BSC_IOG20_APG40

Source Field

TFCASSALL

Source Section

CELTCHF

TFCASSALLSUB

Number of assignment complete to TCH/FRs in overlaid cell.

Data Source

BSC_IOG20_APG40

Source Field

TFCASSALLSUB

Source Section

CELTCHF

TFCONGPGSM

Congestion time in an underlaid subcell

Data Source

BSC_IOG20_APG40

Source Field

TFCONGPGSM

Source Section

CELTCHFP

TFCONGPGSMSUB

Congestion time in an overlaid subcell

Data Source

BSC_IOG20_APG40

Source Field

TFCONGPGSMSUB

Source Section

CELTCHFP

TFCONGSAS

Number of congestions at assignment

Data Source

BSC_IOG20_APG40

Source Field

TFCONGSAS

Source Section

CELTCHF

TFCONGSASSUB

Number of congestions at assignment in overlaid subcell

Data Source

BSC_IOG20_APG40

Source Field

TFCONGSASSUB

Source Section

CELTCHF

TFCONGSHO

Number of congestions at handover

Data Source

BSC_IOG20_APG40

Source Field

TFCONGSHO

Source Section

CELTCHF

TFCONGSHOSUB

Number of congestions at handover in overlaid subcell

Data Source

BSC_IOG20_APG40

Source Field

TFCONGSHOSUB

Source Section

CELTCHF

TFDISFERBL

Dropped FR connections, FER bothlink.

Data Source

BSC_IOG20_APG40

Source Field

TFDISFERBL

Source Section

CLTCHDRF

TFDISFERBLA

Dropped FR AMR connections, FER bothlink.

Data Source

BSC_IOG20_APG40

Source Field

TFDISFERBLA

Source Section

CLTCHDRAF

TFDISFERBLSUB

Dropped FR connections, FER bothlink, overlaid subcell.

Data Source

BSC_IOG20_APG40

Source Field

TFDISFERBLSUB

Source Section

CLTCHDRF

TFDISFERBLSUBA

Dropped FR AMR connections, FER bothlink, overlaid subcell.

Data Source

BSC_IOG20_APG40

Source Field

TFDISFERBLSUBA

Source Section

CLTCHDRAF

TFDISFERDL

Dropped FR connections, FER downlink.

Data Source

BSC_IOG20_APG40

Source Field

TFDISFERDL

Source Section

CLTCHDRF

TFDISFERDLA

Dropped FR AMR connections, FER downlink.

Data Source

BSC_IOG20_APG40

Source Field

TFDISFERDLA

Source Section

CLTCHDRAF

TFDISFERDLSUB

Dropped FR connections, FER downlink,

Data Source

BSC_IOG20_APG40

Source Field

TFDISFERDLSUB

Source Section

CLTCHDRF

TFDISFERDLSUBA

Dropped FR AMR connections, FER downlink, overlaid subcell.

Data Source

BSC_IOG20_APG40

Source Field

TFDISFERDLSUBA

Source Section

CLTCHDRAF

TFDISFERUL

Dropped FR connections, FER uplink.

Data Source

BSC_IOG20_APG40

Source Field

TFDISFERUL

Source Section

CLTCHDRF

TFDISFERULA

Dropped FR AMR connections, FER uplink.

Data Source

BSC_IOG20_APG40

Source Field

TFDISFERULA

Source Section

CLTCHDRAF

TFDISFERULSUB

Dropped FR connections, FER uplink, overlaid subcell

Data Source

BSC_IOG20_APG40

Source Field

TFDISFERULSUB

Source Section

CLTCHDRF

TFDISFERULSUBA

Dropped FR AMR connections, FER uplink, overlaid subcell.

Data Source

BSC_IOG20_APG40

Source Field

TFDISFERULSUBA

Source Section

CLTCHDRAF

TFDISQA

Dropped connections at low quality down or up link.

Data Source

BSC_IOG20_APG40

Source Field

TFDISQA

Source Section

CLTCHDRF

TFDISQABL

Number of dropped connections due to a bad signal quality, bidirectional link

Data Source

BSC_IOG20_APG40

Source Field

TFDISQABL

Source Section

CLTCHDRF

TFDISQABLA

Dropped connections at bad quality bothlink

Data Source

BSC_IOG20_APG40

Source Field

TFDISQABLA

Source Section

CLTCHDRAF

TFDISQABLSUB

Number of dropped connections due to a bad signal quality, bidirectional link in overlaid subcell

Data Source

BSC_IOG20_APG40

Source Field

TFDISQABLSUB

Source Section

CLTCHDRF

TFDISQABLSUBA

Dropped connections at bad quality bothlink in overlaid subcell

Data Source

BSC_IOG20_APG40

Source Field

TFDISQABLSUBA

Source Section

CLTCHDRAF

TFDISQADL

Dropped connections, bad quality, downlink

Data Source

BSC_IOG20_APG40

Source Field

TFDISQADL

Source Section

CLTCHDRF

TFDISQADLA

Dropped connections at bad quality downlink

Data Source

BSC_IOG20_APG40

Source Field

TFDISQADLA

Source Section

CLTCHDRAF

TFDISQADLSUB

Number of dropped connections due to a bad signal quality, downlink in underlaid subcell

Data Source

BSC_IOG20_APG40

Source Field

TFDISQADLSUB

Source Section

CLTCHDRF

TFDISQADLSUBA

Dropped connections at bad quality downlink in overlaid subcell

Data Source

BSC_IOG20_APG40

Source Field

TFDISQADLSUBA

Source Section

CLTCHDRAF

TFDISQAUL

Number of dropped connections due to a bad signal quality, uplink

Data Source

BSC_IOG20_APG40

Source Field

TFDISQAUL

Source Section

CLTCHDRF

TFDISQAULA

Dropped connections at bad quality uplink

Data Source

BSC_IOG20_APG40

Source Field

TFDISQAULA

Source Section

CLTCHDRAF

TFDISQAULSUB

Number of dropped connections due to a bad signal quality, uplink, in overlaid subcell

Data Source

BSC_IOG20_APG40

Source Field

TFDISQAULSUB

Source Section

CLTCHDRF

TFDISQAULSUBA

Dropped connections at bad quality uplink in overlaid subcell

Data Source

BSC_IOG20_APG40

Source Field

TFDISQAULSUBA

Source Section

CLTCHDRAF

TFDISSBL

Number of dropped connections, low signal strength, bidirectional link

Data Source

BSC_IOG20_APG40

Source Field

TFDISSBL

Source Section

CLTCHDRF

TFDISSBLA

Dropped connections at low signal strength bothlink

Data Source

BSC_IOG20_APG40

Source Field

TFDISSBLA

Source Section

CLTCHDRAF

TFDISSBLSUB

Number of dropped connections, low signal strength, bidirectional link, in overlaid subcell

Data Source

BSC_IOG20_APG40

Source Field

TFDISSBLSUB

Source Section

CLTCHDRF

TFDISSBLSUBA

Dropped connections at low signal strength bothlink in overlaid subcell

Data Source

BSC_IOG20_APG40

Source Field

TFDISSBLSUBA

Source Section

CLTCHDRAF

TFDISSDL

Number of dropped connections due to a low signal strength, downlink

Data Source

BSC_IOG20_APG40

Source Field

TFDISSDL

Source Section

CLTCHDRF

TFDISSDLA

Dropped connections at low signal strength downlink

Data Source

BSC_IOG20_APG40

Source Field

TFDISSDLA

Source Section

CLTCHDRAF

TFDISSDLSUB

Number of dropped connections due to a low signal strength downlink in overlaid subcell

Data Source

BSC_IOG20_APG40

Source Field

TFDISSDLSUB

Source Section

CLTCHDRF

TFDISSDLSUBA

Dropped connections at low signal strength downlink in overlaid subcell

Data Source

BSC_IOG20_APG40

Source Field

TFDISSDLSUBA

Source Section

CLTCHDRAF

TFDISSS1

Number of dropped connections due to a low signal strength downlink or uplink for MS power class 1.

Data Source

BSC_IOG20_APG40

Source Field

TFDISSS1

Source Section

CLTCHDRF

TFDISSS2

Number of dropped connections due to a low signal strength downlink or uplink for MS power class 2.

Data Source

BSC_IOG20_APG40

Source Field

TFDISSS2

Source Section

CLTCHDRF

TFDISSS3

Number of dropped connections due to a low signal strength downlink or uplink for MS power class 3.

Data Source

BSC_IOG20_APG40

Source Field

TFDISSS3

Source Section

CLTCHDRF

TFDISSS4

Number of dropped connections due to a low signal strength downlink or uplink for MS power class 4.

Data Source

BSC_IOG20_APG40

Source Field

TFDISSS4

Source Section

CLTCHDRF

TFDISSS5

Number of dropped connections due to a low signal strength downlink or uplink for MS power class 5.

Data Source

BSC_IOG20_APG40

Source Field

TFDISSS5

Source Section

CLTCHDRF

TFDISSUL

Number of dropped connections due to a low signal strength, uplink

Data Source

BSC_IOG20_APG40

Source Field

TFDISSUL

Source Section

CLTCHDRF

TFDISSULA

Dropped connections at low signal strength uplink

Data Source

BSC_IOG20_APG40

Source Field

TFDISSULA

Source Section

CLTCHDRAF

TFDISSULSUB

Number of dropped connections due to a low signal strength, uplink, in overlaid subcell

Data Source

BSC_IOG20_APG40

Source Field

TFDISSULSUB

Source Section

CLTCHDRF

TFDISSULSUBA

Dropped connections at low signal strength uplink in overlaid subcell

Data Source

BSC_IOG20_APG40

Source Field

TFDISSULSUBA

Source Section

CLTCHDRAF

TFDISTA

Number of dropped connections due to a excessive Timing Advance, TA

Data Source

BSC_IOG20_APG40

Source Field

TFDISTA

Source Section

CLTCHDRF

TFDISTAA

Dropped connections at excessive TA

Data Source

BSC_IOG20_APG40

Source Field

TFDISTAA

Source Section

CLTCHDRAF

TFDROPPGSM

Number of dropped connections due to failure for connections in an underlaid subcell

Data Source

BSC_IOG20_APG40

Source Field

TFDROPPGSM

Source Section

CELTCHFP

TFDROPPGSMSUB

Number of dropped connections due to failure for connections in an overlaid subcell

Data Source

BSC_IOG20_APG40

Source Field

TFDROPPGSMSUB

Source Section

CELTCHFP

TFDUALASSALL

assignment attempts to TCH/FRs for dualband MSs

Data Source

BSC_IOG20_APG40

Source Field

TFDUALASSALL

Source Section

CELLDUALT

TFDUALCASSALL

assignment complete to TCH/FRs for dualband MSs

Data Source

BSC_IOG20_APG40

Source Field

TFDUALCASSALL

Source Section

CELLDUALT

TFDUALNDROP

dropped connections due to failure to TCH/FRs for dual band MSs.

Data Source

BSC_IOG20_APG40

Source Field

TFDUALNDROP

Source Section

CELLDUALT

TFDUALSCAN

Number of accumulations of traffic level counter

Data Source

BSC_IOG20_APG40

Source Field

TFDUALSCAN

Source Section

CELLDUALT

TFDUALTRALACC

Traffic level accumulator (period 10 seconds).

Data Source

BSC_IOG20_APG40

Source Field

TFDUALTRALACC

Source Section

CELLDUALT

TFESTPGSM

Number of connections successfully established in underlaid subcell

Data Source

BSC_IOG20_APG40

Source Field

TFESTPGSM

Source Section

CELTCHFP

TFESTPGSMSUB

Number of connections successfully established in overlaid subcell

Data Source

BSC_IOG20_APG40

Source Field

TFESTPGSMSUB

Source Section

CELTCHFP

TFFERBLDIS0

FER drop calls, FR bothlink, for CHGRP0.

Data Source

BSC_IOG20_APG40

Source Field

TFFERBLDIS0

Source Section

CHGRP0F

TFFERDLDIS0

FER drop calls, FR downlink, for CHGRP0.

Data Source

BSC_IOG20_APG40

Source Field

TFFERDLDIS0

Source Section

CHGRP0F

TFFERULDIS0

FER drop calls, FR uplink, for CHGRP0.

Data Source

BSC_IOG20_APG40

Source Field

TFFERULDIS0

Source Section

CHGRP0F

TFHSCSDESEC

Traffic level accumulator for seized essential HSCSD secondary channels

Data Source

BSC_IOG20_APG40

Source Field

TFHSCSDESEC

Source Section

CELLHSCSD

TFHSCSDESECSUB

Traffic level accumulator for seized essential HSCSD secondary channels in overlaid subcell

Data Source

BSC_IOG20_APG40

Source Field

TFHSCSDESECSUB

Source Section

CELLHSCSD

TFHSCSDMAIN

Traffic level accumulator for seized HSCSD main channels

Data Source

BSC_IOG20_APG40

Source Field

TFHSCSDMAIN

Source Section

CELLHSCSD

TFHSCSDMAINSUB

Traffic level accumulator for seized HSCSD main channels in the overlaid cell

Data Source

BSC_IOG20_APG40

Source Field

TFHSCSDMAINSUB

Source Section

CELLHSCSD

TFHSCSDNESEC

Traffic level accumulator for seized non-essential HSCSD secondary channels

Data Source

BSC_IOG20_APG40

Source Field

TFHSCSDNESEC

Source Section

CELLHSCSD

TFHSCSDNESECSUB

Traffic level accumulator for seized non-essential HSCSD secondary channels in overlaid subcell

Data Source

BSC_IOG20_APG40

Source Field

TFHSCSDNESECSUB

Source Section

CELLHSCSD

TFMSESTB

Number of successful MS channel establishments

Data Source

BSC_IOG20_APG40

Source Field

TFMSESTB

Source Section

CELTCHF

TFMSESTBSUB

Number of successful MS channel establishments for overlaid subcell

Data Source

BSC_IOG20_APG40

Source Field

TFMSESTBSUB

Source Section

CELTCHF

TFNCEDROP

Number of dropped connections that occur in underlaid subcell when a subscriber to subscriber connection is established. This is between the DTAP messages Connect Acknowledge and Release or Disconnect.

Data Source

BSC_IOG20_APG40

Source Field

TFNCEDROP

Source Section

CELTCHF

TFNCEDROPSUB

Number of dropped connections that occur in overlaid subcell when a subscriber to subscriber connection is established. This is between the DTAP messages Connect

Data Source

BSC_IOG20_APG40

Source Field

TFNCEDROPSUB

Source Section

CELTCHF

TFNDROP

Number of dropped connections due to a failure.

Data Source

BSC_IOG20_APG40

Source Field

TFNDROP

Source Section

CELTCHF

TFNDROP0

Total dropped TCH/F connections in CHGRP0

Data Source

BSC_IOG20_APG40

Source Field

TFNDROP0

Source Section

CHGRP0F

TFNDROPSUB

Number of dropped connections in overlaid cell due to a failure

Data Source

BSC_IOG20_APG40

Source Field

TFNDROPSUB

Source Section

CELTCHF

TFNRELCONG

Number of released TCH due to a radio resource congestion

Data Source

BSC_IOG20_APG40

Source Field

TFNRELCONG

Source Section

CELTCHF

TFNRELCONGSUB

Number of released TCH due to a radio resource congestion in overlaid subcell

Data Source

BSC_IOG20_APG40

Source Field

TFNRELCONGSUB

Source Section

CELTCHF

TFNSCAN_CELTCHF

Number of accumulations of traffic level

Data Source

BSC_IOG20_APG40

Source Field

TFNSCAN

Source Section

CELTCHF

TFNSCAN_CELTCHFP

Number of accumulations of traffic P-900 level counter

Data Source

BSC_IOG20_APG40

Source Field

TFNSCAN

Source Section

CELTCHFP

TFQABLDIS0

Dropped connection, bad quality both links

Data Source

BSC_IOG20_APG40

Source Field

TFQABLDIS0

Source Section

CHGRP0F

TFQADLDIS0

Dropped connection, bad quality downlink

Data Source

BSC_IOG20_APG40

Source Field

TFQADLDIS0

Source Section

CHGRP0F

TFQAULDIS0

Dropped connection, bad quality uplink

Data Source

BSC_IOG20_APG40

Source Field

TFQAULDIS0

Source Section

CHGRP0F

TFSPV1DTMSUC

Number of successful establishment of a DTM connection in the cell, TCH/FR SPV1

Data Source

BSC_IOG20_APG40

Source Field

TFSPV1DTMSUC

Source Section

CLDTMEST

TFSPV2DTMSUC

Number of successful establishment of a DTM connection in the cell, TCH/FR SPV2

Data Source

BSC_IOG20_APG40

Source Field

TFSPV2DTMSUC

Source Section

CLDTMEST

TFSPV3DTMSUC

Number of successful establishment of a DTM connection in the cell, TCH/FR SPV3

Data Source

BSC_IOG20_APG40

Source Field

TFSPV3DTMSUC

Source Section

CLDTMEST

TFSPV5DTMSUC

Number of successful establishment of a DTM connection in the cell, TCH/FR SPV5.

Data Source

BSC_APG40

Source Field

TFSPV5DTMSUC

Source Section

CLDTMEST

TFSSBLDIS0

Dropped connection, low signal strength both links

Data Source

BSC_IOG20_APG40

Source Field

TFSSBLDIS0

Source Section

CHGRP0F

TFSSDLDIS0

Dropped connection, low signal strength downlink

Data Source

BSC_IOG20_APG40

Source Field

TFSSDLDIS0

Source Section

CHGRP0F

TFSSULDIS0

Dropped connection, low signal strength uplink

Data Source

BSC_IOG20_APG40

Source Field

TFSSULDIS0

Source Section

CHGRP0F

TFSUDLOS

suddenly lost connections

Data Source

BSC_IOG20_APG40

Source Field

TFSUDLOS

Source Section

CLTCHDRF

TFSUDLOS0

Suddenly lost connection

Data Source

BSC_IOG20_APG40

Source Field

TFSUDLOS0

Source Section

CHGRP0F

TFSUDLOSA

Suddenly lost connections

Data Source

BSC_IOG20_APG40

Source Field

TFSUDLOSA

Source Section

CLTCHDRAF

TFSUDLOSSUB

Number of suddenly lost connections in overlaid subcell

Data Source

BSC_IOG20_APG40

Source Field

TFSUDLOSSUB

Source Section

CLTCHDRF

TFSUDLOSSUBA

Suddenly lost connections in overlaid subcell

Data Source

BSC_IOG20_APG40

Source Field

TFSUDLOSSUBA

Source Section

CLTCHDRAF

TFTADIS0

Dropped connection at excessive TA

Data Source

BSC_IOG20_APG40

Source Field

TFTADIS0

Source Section

CHGRP0F

TFTCONGS

TCH/F congestion time

Data Source

BSC_IOG20_APG40

Source Field

TFTCONGS

Source Section

CELTCHF

TFTCONSUB

TCH/F congestion time for overlaid subcell

Data Source

BSC_IOG20_APG40

Source Field

TFTCONSUB

Source Section

CELTCHF

TFTHARDCONGS

TCH/F hard congestion time

Data Source

BSC_IOG20_APG40

Source Field

TFTHARDCONGS

Source Section

CELTCHF

TFTHARDCONGSSUB

TCH/F hard congestion for overlaid subcell

Data Source

BSC_IOG20_APG40

Source Field

TFTHARDCONGSSUB

Source Section

CELTCHF

TFTRALACC

Traffic level accumulator (period 10 seconds)

Data Source

BSC_IOG20_APG40

Source Field

TFTRALACC

Source Section

CELTCHF

TFTRALACC0

Number of FR traffic level accumulations.

Data Source

BSC_IOG20_APG40

Source Field

TFTRALACC0

Source Section

CHGRP0F

TFTRALPACC

Traffic level accumulator in an underlaid subcell

Data Source

BSC_IOG20_APG40

Source Field

TFTRALPACC

Source Section

CELTCHFP

TFTRALPACCSUB

Traffic level accumulator in an overlaid subcell

Data Source

BSC_IOG20_APG40

Source Field

TFTRALPACCSUB

Source Section

CELTCHFP

TFTRALSUB

Traffic level accumulator for overlaid subcell

Data Source

BSC_IOG20_APG40

Source Field

TFTRALSUB

Source Section

CELTCHF

TFV1CALLS

Call attempt counter

Data Source

BSC_IOG20_APG40

Source Field

TFV1CALLS

Source Section

CLTCHFV1

TFV1CALLSSUB

Call attempt counter for subcell

Data Source

BSC_IOG20_APG40

Source Field

TFV1CALLSSUB

Source Section

CLTCHFV1

TFV1CONGS

Congestion counter

Data Source

BSC_IOG20_APG40

Source Field

TFV1CONGS

Source Section

CLTCHFV1

TFV1CONGSAS

Number of congestion at assignment

Data Source

BSC_IOG20_APG40

Source Field

TFV1CONGSAS

Source Section

CLTCHFV1

TFV1CONGSASSUB

Number of congestion at assignment, overlaid subcell

Data Source

BSC_IOG20_APG40

Source Field

TFV1CONGSASSUB

Source Section

CLTCHFV1

TFV1CONGSHO

Number of congestion at handover

Data Source

BSC_IOG20_APG40

Source Field

TFV1CONGSHO

Source Section

CLTCHFV1

TFV1CONGSHOSUB

Number of congestion at handover, overlaid subcell

Data Source

BSC_IOG20_APG40

Source Field

TFV1CONGSHOSUB

Source Section

CLTCHFV1

TFV1CONGSSUB

Congestion counter for subcell

Data Source

BSC_IOG20_APG40

Source Field

TFV1CONGSSUB

Source Section

CLTCHFV1

TFV1FER

FR Frame Erasure Rate (FER) counter

Data Source

BSC_IOG20_APG40

Source Field

TFV1FER

Source Section

CELLFERF

TFV1FERTF

FR Frame Erasure Rate (FER) counter

Data Source

BSC_IOG20_APG40

Source Field

TFV1FERTF

Source Section

CELLFERF

TFV1NSCAN

Number of accumulations of traffic level counter

Data Source

BSC_IOG20_APG40

Source Field

TFV1NSCAN

Source Section

CLTCHFV1

TFV1NSCANSUB

Number of accumulations of traffic level counter for subcell

Data Source

BSC_IOG20_APG40

Source Field

TFV1NSCANSUB

Source Section

CLTCHFV1

TFV1TCONGS

TCH congestion time

Data Source

BSC_IOG20_APG40

Source Field

TFV1TCONGS

Source Section

CLTCHFV1

TFV1TCONSUB

TCH congestion time for subcell

Data Source

BSC_IOG20_APG40

Source Field

TFV1TCONSUB

Source Section

CLTCHFV1

TFV1TRALACC

Traffic level accumulator

Data Source

BSC_IOG20_APG40

Source Field

TFV1TRALACC

Source Section

CLTCHFV1

TFV1TRALSUB

TCH traffic level accumulated in subcell

Data Source

BSC_IOG20_APG40

Source Field

TFV1TRALSUB

Source Section

CLTCHFV1

TFV2CALLS

Call attempt counter

Data Source

BSC_IOG20_APG40

Source Field

TFV2CALLS

Source Section

CLTCHFV2

TFV2CALLSSUB

Call attempt counter for subcell

Data Source

BSC_IOG20_APG40

Source Field

TFV2CALLSSUB

Source Section

CLTCHFV2

TFV2CONGS

Congestion counter

Data Source

BSC_IOG20_APG40

Source Field

TFV2CONGS

Source Section

CLTCHFV2

TFV2CONGSAS

Number of congestion at assignment

Data Source

BSC_IOG20_APG40

Source Field

TFV2CONGSAS

Source Section

CLTCHFV2

TFV2CONGSASSUB

Number of congestion at assignment, overlaid subcell

Data Source

BSC_IOG20_APG40

Source Field

TFV2CONGSASSUB

Source Section

CLTCHFV2

TFV2CONGSHO

Number of congestion at handover

Data Source

BSC_IOG20_APG40

Source Field

TFV2CONGSHO

Source Section

CLTCHFV2

TFV2CONGSHOSUB

Number of congestion at handover, overlaid subcell

Data Source

BSC_IOG20_APG40

Source Field

TFV2CONGSHOSUB

Source Section

CLTCHFV2

TFV2CONGSSUB

Congestion counter for subcell

Data Source

BSC_IOG20_APG40

Source Field

TFV2CONGSSUB

Source Section

CLTCHFV2

TFV2FER

FR Frame Erasure Rate (FER) counter

Data Source

BSC_IOG20_APG40

Source Field

TFV2FER

Source Section

CELLFERF

TFV2FERTF

FR Frame Erasure Rate (FER) counter

Data Source

BSC_IOG20_APG40

Source Field

TFV2FERTF

Source Section

CELLFERF

TFV2NSCAN

Number of accumulations of traffic level counter

Data Source

BSC_IOG20_APG40

Source Field

TFV2NSCAN

Source Section

CLTCHFV2

TFV2NSCANSUB

Number of accumulations of traffic level counter for subcell

Data Source

BSC_IOG20_APG40

Source Field

TFV2NSCANSUB

Source Section

CLTCHFV2

TFV2TCONGS

TCH congestion time

Data Source

BSC_IOG20_APG40

Source Field

TFV2TCONGS

Source Section

CLTCHFV2

TFV2TCONSUB

TCH congestion time for subcell

Data Source

BSC_IOG20_APG40

Source Field

TFV2TCONSUB

Source Section

CLTCHFV2

TFV2TRALACC

Traffic level accumulator

Data Source

BSC_IOG20_APG40

Source Field

TFV2TRALACC

Source Section

CLTCHFV2

TFV2TRALSUB

TCH traffic level accumulated in subcell

Data Source

BSC_IOG20_APG40

Source Field

TFV2TRALSUB

Source Section

CLTCHFV2

TFV3CALLS

Call attempt counter

Data Source

BSC_IOG20_APG40

Source Field

TFV3CALLS

Source Section

CLTCHFV3

TFV3CALLSSUB

Call attempt counter for subcell

Data Source

BSC_IOG20_APG40

Source Field

TFV3CALLSSUB

Source Section

CLTCHFV3

TFV3CM1DL

Time (number of frames) on TCH/F SPV3 Mode 1 downlink

Data Source

BSC_IOG20_APG40

Source Field

TFV3CM1DL

Source Section

CLTCHFV3C

TFV3CM1UL

Time (number of frames) on TCH/F SPV3 Mode 1 uplink

Data Source

BSC_IOG20_APG40

Source Field

TFV3CM1UL

Source Section

CLTCHFV3C

TFV3CM2DL

Time (number of frames) on TCH/F SPV3 Mode 2 downlink

Data Source

BSC_IOG20_APG40

Source Field

TFV3CM2DL

Source Section

CLTCHFV3C

TFV3CM2UL

Time (number of frames) on TCH/F SPV3 Mode 2 uplink

Data Source

BSC_IOG20_APG40

Source Field

TFV3CM2UL

Source Section

CLTCHFV3C

TFV3CM3DL

Time (number of frames) on TCH/F SPV3 Mode 3 downlink

Data Source

BSC_IOG20_APG40

Source Field

TFV3CM3DL

Source Section

CLTCHFV3C

TFV3CM3UL

Time (number of frames) on TCH/F SPV3 Mode 3 uplink

Data Source

BSC_IOG20_APG40

Source Field

TFV3CM3UL

Source Section

CLTCHFV3C

TFV3CM4DL

Time (number of frames) on TCH/F SPV3 Mode 4 downlink

Data Source

BSC_IOG20_APG40

Source Field

TFV3CM4DL

Source Section

CLTCHFV3C

TFV3CM4UL

Time (number of frames) on TCH/F SPV3 Mode 4 uplink

Data Source

BSC_IOG20_APG40

Source Field

TFV3CM4UL

Source Section

CLTCHFV3C

TFV3CONGSAS

Number of congestion at assignment

Data Source

BSC_IOG20_APG40

Source Field

TFV3CONGSAS

Source Section

CLTCHFV3

TFV3CONGSASSUB

Number of congestion at assignment, overlaid subcell

Data Source

BSC_IOG20_APG40

Source Field

TFV3CONGSASSUB

Source Section

CLTCHFV3

TFV3CONGSHO

Number of congestion at handover

Data Source

BSC_IOG20_APG40

Source Field

TFV3CONGSHO

Source Section

CLTCHFV3

TFV3CONGSHOSUB

Number of congestion at handover, overlaid subcell

Data Source

BSC_IOG20_APG40

Source Field

TFV3CONGSHOSUB

Source Section

CLTCHFV3

TFV3FERCM1

FR Frame Erasure Rate (FER) counter

Data Source

BSC_IOG20_APG40

Source Field

TFV3FERCM1

Source Section

CELLFERF

TFV3FERCM2

FR Frame Erasure Rate (FER) counter

Data Source

BSC_IOG20_APG40

Source Field

TFV3FERCM2

Source Section

CELLFERF

TFV3FERCM3

FR Frame Erasure Rate (FER) counter

Data Source

BSC_IOG20_APG40

Source Field

TFV3FERCM3

Source Section

CELLFERF

TFV3FERCM4

FR Frame Erasure Rate (FER) counter

Data Source

BSC_IOG20_APG40

Source Field

TFV3FERCM4

Source Section

CELLFERF

TFV3NSCAN

Number of accumulations of traffic level counter

Data Source

BSC_IOG20_APG40

Source Field

TFV3NSCAN

Source Section

CLTCHFV3

TFV3TCONGS

TCH congestion time

Data Source

BSC_IOG20_APG40

Source Field

TFV3TCONGS

Source Section

CLTCHFV3

TFV3TCONSUB

TCH congestion time for subcell

Data Source

BSC_IOG20_APG40

Source Field

TFV3TCONSUB

Source Section

CLTCHFV3

TFV3TFCM1

FR Frame Erasure Rate (FER) counter

Data Source

BSC_IOG20_APG40

Source Field

TFV3TFCM1

Source Section

CELLFERF

TFV3TFCM2

FR Frame Erasure Rate (FER) counter

Data Source

BSC_IOG20_APG40

Source Field

TFV3TFCM2

Source Section

CELLFERF

TFV3TFCM3

FR Frame Erasure Rate (FER) counter

Data Source

BSC_IOG20_APG40

Source Field

TFV3TFCM3

Source Section

CELLFERF

TFV3TFCM4

FR Frame Erasure Rate (FER) counter

Data Source

BSC_IOG20_APG40

Source Field

TFV3TFCM4

Source Section

CELLFERF

TFV3TRALACC

Traffic level accumulator

Data Source

BSC_IOG20_APG40

Source Field

TFV3TRALACC

Source Section

CLTCHFV3

TFV3TRALSUB

TCH traffic level accumulated in subcell

Data Source

BSC_IOG20_APG40

Source Field

TFV3TRALSUB

Source Section

CLTCHFV3

TFV5CALLS

Call attempt counter. CLTCHFV5 (TCH/F Speech Version 5 per Cell)

Data Source

BSC_APG40

Source Field

TFV5CALLS

Source Section

CLTCHFV5

TFV5CALLSSUB

Call attempt counter for overlaid subcell. CLTCHFV5 (TCH/F Speech Version 5 per Cell)

Data Source

BSC_APG40

Source Field

TFV5CALLSSUB

Source Section

CLTCHFV5

TFV5CM1DL

Time (number of frames) on TCH/F SPV5 Mode 1 downlink

Data Source

BSC_APG40

Source Field

TFV5CM1DL

Source Section

CLTCHFV5C

TFV5CM1UL

Time (number of frames) on TCH/F SPV5 Mode 1 uplink

Data Source

BSC_APG40

Source Field

TFV5CM1UL

Source Section

CLTCHFV5C

TFV5CM2DL

Time (number of frames) on TCH/F SPV5 Mode 2 downlink

Data Source

BSC_APG40

Source Field

TFV5CM2DL

Source Section

CLTCHFV5C

TFV5CM2UL

Time (number of frames) on TCH/F SPV5 Mode 2 uplink

Data Source

BSC_APG40

Source Field

TFV5CM2UL

Source Section

CLTCHFV5C

TFV5CM3DL

Time (number of frames) on TCH/F SPV5 Mode 3 downlink

Data Source

BSC_APG40

Source Field

TFV5CM3DL

Source Section

CLTCHFV5C

TFV5CM3UL

Time (number of frames) on TCH/F SPV5 Mode 3 uplink

Data Source

BSC_APG40

Source Field

TFV5CM3UL

Source Section

CLTCHFV5C

TFV5CONGSAS

Number of congestion at assignment. CLTCHFV5 (TCH/F Speech Version 5 per Cell)

Data Source

BSC_APG40

Source Field

TFV5CONGSAS

Source Section

CLTCHFV5

TFV5CONGSASSUB

Number of congestion at assignment, overlaid subcell. CLTCHFV5 (TCH/F Speech Version 5 per Cell)

Data Source

BSC_APG40

Source Field

TFV5CONGSASSUB

Source Section

CLTCHFV5

TFV5CONGSHO

Number of congestion at handover. CLTCHFV5 (TCH/F Speech Version 5 per Cell)

Data Source

BSC_APG40

Source Field

TFV5CONGSHO

Source Section

CLTCHFV5

TFV5CONGSHOSUB

Number of congestion at handover, overlaid subcell. CLTCHFV5 (TCH/F Speech Version 5 per Cell)

Data Source

BSC_APG40

Source Field

TFV5CONGSHOSUB

Source Section

CLTCHFV5

TFV5FERCM1

counts the number of frames erased by the BTS when AMR-WB is used and the MS is using codec mode 1.

Data Source

BSC_APG40

Source Field

TFV5FERCM1

Source Section

CELLFERF

TFV5FERCM2

count the number of frames erased by the BTS when AMR-WB is used and the MS is using codec mode 2.

Data Source

BSC_APG40

Source Field

TFV5FERCM2

Source Section

CELLFERF

TFV5FERCM3

count the number of frames erased by the BTS when AMR-WB is used and the MS is using codec mode 3.

Data Source

BSC_APG40

Source Field

TFV5FERCM3

Source Section

CELLFERF

TFV5NSCAN

Number of accumulations of traffic level counter. CLTCHFV5 (TCH/F Speech Version 5 per Cell)

Data Source

BSC_APG40

Source Field

TFV5NSCAN

Source Section

CLTCHFV5

TFV5TCONGS

TCH congestion time. CLTCHFV5 (TCH/F Speech Version 5 per Cell)

Data Source

BSC_APG40

Source Field

TFV5TCONGS

Source Section

CLTCHFV5

TFV5TCONSUB

TCH congestion time for overlaid subcell. CLTCHFV5 (TCH/F Speech Version 5 per Cell)

Data Source

BSC_APG40

Source Field

TFV5TCONSUB

Source Section

CLTCHFV5

TFV5TFCM1

count the number of frames transmitted from the MS for AMR-WB and the MS is using codec mode 1.

Data Source

BSC_APG40

Source Field

TFV5TFCM1

Source Section

CELLFERF

TFV5TFCM2

count the number of frames transmitted from the MS for AMR-WB and the MS is using codec mode 2.

Data Source

BSC_APG40

Source Field

TFV5TFCM2

Source Section

CELLFERF

TFV5TFCM3

count the number of frames transmitted from the MS for AMR-WB and the MS is using codec mode 3.

Data Source

BSC_APG40

Source Field

TFV5TFCM3

Source Section

CELLFERF

TFV5TRALACC

Traffic level accumulator. CLTCHFV5 (TCH/F Speech Version 5 per Cell)

Data Source

BSC_APG40

Source Field

TFV5TRALACC

Source Section

CLTCHFV5

TFV5TRALSUB

TCH traffic level accumulated in overlaid subcell. CLTCHFV5 (TCH/F Speech Version 5 per Cell)

Data Source

BSC_APG40

Source Field

TFV5TRALSUB

Source Section

CLTCHFV5

TH1DLFER

Number of FER occurrences in the range 0- FERTHR1, for codec type HR, DL.

Data Source

BSC_IOG20_APG40

Source Field

TH1DLFER

Source Section

CELLHFER

TH1DLSUBFER

Number of FER occurrences in the range 0- FERTHR1, for codec type HR, overlaid subcell DL.

Data Source

BSC_IOG20_APG40

Source Field

TH1DLSUBFER

Source Section

CELLHFER

TH1ULFER

Number of FER occurrences in the range 0- FERTHR1, for codec type HR, UL.

Data Source

BSC_IOG20_APG40

Source Field

TH1ULFER

Source Section

CELLHFER

TH1ULSUBFER

Number of FER occurrences in the range 0-FERTHR1, for codec type HR, overlaid subcell UL.

Data Source

BSC_IOG20_APG40

Source Field

TH1ULSUBFER

Source Section

CELLHFER

TH2DLFER

Number of FER occurrences in the range FERTHR1-FERTHR2, for codec type HR, DL.

Data Source

BSC_IOG20_APG40

Source Field

TH2DLFER

Source Section

CELLHFER

TH2DLSUBFER

Number of FER occurrences in the range FERTHR1-FERTHR2, for codec type HR, overlaid subcell DL.

Data Source

BSC_IOG20_APG40

Source Field

TH2DLSUBFER

Source Section

CELLHFER

TH2ULFER

Number of FER occurrences in the range FERTHR1-FERTHR2, for codec type HR, UL.

Data Source

BSC_IOG20_APG40

Source Field

TH2ULFER

Source Section

CELLHFER

TH2ULSUBFER

Number of FER occurrences in the range FERTHR1-FERTHR2, for codec type HR, overlaid subcell UL.

Data Source

BSC_IOG20_APG40

Source Field

TH2ULSUBFER

Source Section

CELLHFER

TH3DLFER

Number of FER occurrences in the range FERTHR2-FERTHR3, for codec type HR, DL.

Data Source

BSC_IOG20_APG40

Source Field

TH3DLFER

Source Section

CELLHFER

TH3DLSUBFER

Number of FER occurrences in the range FERTHR2-FERTHR3, for codec type HR, overlaid subcell DL.

Data Source

BSC_IOG20_APG40

Source Field

TH3DLSUBFER

Source Section

CELLHFER

TH3ULFER

Number of FER occurrences in the range FERTHR2-FERTHR3, for codec type HR, UL.

Data Source

BSC_IOG20_APG40

Source Field

TH3ULFER

Source Section

CELLHFER

TH3ULSUBFER

Number of FER occurrences in the range FERTHR2-FERTHR3, for codec type HR, overlaid subcell UL.

Data Source

BSC_IOG20_APG40

Source Field

TH3ULSUBFER

Source Section

CELLHFER

TH4DLFER

Number of FER occurrences in the range FERTHR3-FERTHR4, for codec type HR, DL.

Data Source

BSC_IOG20_APG40

Source Field

TH4DLFER

Source Section

CELLHFER

TH4DLSUBFER

Number of FER occurrences in the range FERTHR3-FERTHR4, for codec type HR, overlaid subcell DL.

Data Source

BSC_IOG20_APG40

Source Field

TH4DLSUBFER

Source Section

CELLHFER

TH4ULFER

Number of FER occurrences in the range FERTHR3-FERTHR4, for codec type HR, UL.

Data Source

BSC_IOG20_APG40

Source Field

TH4ULFER

Source Section

CELLHFER

TH4ULSUBFER

Number of FER occurrences in the range FERTHR3-FERTHR4, for codec type HR, overlaid subcell UL.

Data Source

BSC_IOG20_APG40

Source Field

TH4ULSUBFER

Source Section

CELLHFER

TH5DLFER

Number of FER occurrences in the range FERTHR4-96, for codec type HR, DL.

Data Source

BSC_IOG20_APG40

Source Field

TH5DLFER

Source Section

CELLHFER

TH5DLSUBFER

Number of FER occurrences in the range FERTHR4-96, for codec type HR, overlaid subcell DL.

Data Source

BSC_IOG20_APG40

Source Field

TH5DLSUBFER

Source Section

CELLHFER

TH5ULFER

Number of FER occurrences in the range FERTHR4-96, for codec type HR, UL.

Data Source

BSC_IOG20_APG40

Source Field

TH5ULFER

Source Section

CELLHFER

TH5ULSUBFER

Number of FER occurrences in the range FERTHR4-96, for codec type HR, overlaid subcell UL.

Data Source

BSC_IOG20_APG40

Source Field

TH5ULSUBFER

Source Section

CELLHFER

THCALLS

Call attempt counter

Data Source

BSC_IOG20_APG40

Source Field

THCALLS

Source Section

CELTCHH

THCALLSSUB

Call attempt counter for overlaid subcell

Data Source

BSC_IOG20_APG40

Source Field

THCALLSSUB

Source Section

CELTCHH

THCASSALL

Assignment complete for all MS power classes

Data Source

BSC_IOG20_APG40

Source Field

THCASSALL

Source Section

CELTCHH

THCASSALLSUB

Assignment complete in overlaid subcell for all MS power classes.

Data Source

BSC_IOG20_APG40

Source Field

THCASSALLSUB

Source Section

CELTCHH

THCONGSAS

nr of congestion at assignment

Data Source

BSC_IOG20_APG40

Source Field

THCONGSAS

Source Section

CELTCHH

THCONGSASSUB

nr of congestion at assignment in overlaid subcell

Data Source

BSC_IOG20_APG40

Source Field

THCONGSASSUB

Source Section

CELTCHH

THCONGSHO

nr of congestion at handover

Data Source

BSC_IOG20_APG40

Source Field

THCONGSHO

Source Section

CELTCHH

THCONGSHOSUB

nr of congestion at handover in overlaid subcell

Data Source

BSC_IOG20_APG40

Source Field

THCONGSHOSUB

Source Section

CELTCHH

THDISFERBL

Dropped HR connections, FER bothlink.

Data Source

BSC_IOG20_APG40

Source Field

THDISFERBL

Source Section

CLTCHDRH

THDISFERBLA

Dropped HR AMR connections, FER bothlink.

Data Source

BSC_IOG20_APG40

Source Field

THDISFERBLA

Source Section

CLTCHDRAH

THDISFERBLSUB

Dropped HR connections, FER bothlink, overlaid subcell.

Data Source

BSC_IOG20_APG40

Source Field

THDISFERBLSUB

Source Section

CLTCHDRH

THDISFERBLSUBA

Dropped HR AMR connections, FER bothlink,

Data Source

BSC_IOG20_APG40

Source Field

THDISFERBLSUBA

Source Section

CLTCHDRAH

THDISFERDL

Dropped HR connections, FER downlink.

Data Source

BSC_IOG20_APG40

Source Field

THDISFERDL

Source Section

CLTCHDRH

THDISFERDLA

Dropped HR AMR connections, FER downlink.

Data Source

BSC_IOG20_APG40

Source Field

THDISFERDLA

Source Section

CLTCHDRAH

THDISFERDLSUB

Dropped HR connections, FER downlink, overlaid subcell.

Data Source

BSC_IOG20_APG40

Source Field

THDISFERDLSUB

Source Section

CLTCHDRH

THDISFERDLSUBA

Dropped HR AMR connections, FER downlink, overlaid subcell.

Data Source

BSC_IOG20_APG40

Source Field

THDISFERDLSUBA

Source Section

CLTCHDRAH

THDISFERUL

Dropped HR connections, FER uplink.

Data Source

BSC_IOG20_APG40

Source Field

THDISFERUL

Source Section

CLTCHDRH

THDISFERULA

Dropped HR AMR connections, FER uplink.

Data Source

BSC_IOG20_APG40

Source Field

THDISFERULA

Source Section

CLTCHDRAH

THDISFERULSUB

Dropped HR connections, FER uplink, overlaid subcell.

Data Source

BSC_IOG20_APG40

Source Field

THDISFERULSUB

Source Section

CLTCHDRH

THDISFERULSUBA

Dropped HR AMR connections, FER uplink, overlaid subcell.

Data Source

BSC_IOG20_APG40

Source Field

THDISFERULSUBA

Source Section

CLTCHDRAH

THDISQABL

Dropped connections at bad quality bothlink

Data Source

BSC_IOG20_APG40

Source Field

THDISQABL

Source Section

CLTCHDRH

THDISQABLA

Dropped connections at bad quality bothlink

Data Source

BSC_IOG20_APG40

Source Field

THDISQABLA

Source Section

CLTCHDRAH

THDISQABLSUB

Dropped connections at bad quality bothlink in overlaid subcell

Data Source

BSC_IOG20_APG40

Source Field

THDISQABLSUB

Source Section

CLTCHDRH

THDISQABLSUBA

Dropped connections at bad quality bothlink in overlaid subcell

Data Source

BSC_IOG20_APG40

Source Field

THDISQABLSUBA

Source Section

CLTCHDRAH

THDISQADL

Dropped connections at bad quality downlink

Data Source

BSC_IOG20_APG40

Source Field

THDISQADL

Source Section

CLTCHDRH

THDISQADLA

Dropped connections at bad quality downlink

Data Source

BSC_IOG20_APG40

Source Field

THDISQADLA

Source Section

CLTCHDRAH

THDISQADLSUB

Dropped connections at bad quality downlink in overlaid subcell

Data Source

BSC_IOG20_APG40

Source Field

THDISQADLSUB

Source Section

CLTCHDRH

THDISQADLSUBA

Dropped connections at bad quality downlink in overlaid subcell

Data Source

BSC_IOG20_APG40

Source Field

THDISQADLSUBA

Source Section

CLTCHDRAH

THDISQAUL

Dropped connections at bad quality uplink

Data Source

BSC_IOG20_APG40

Source Field

THDISQAUL

Source Section

CLTCHDRH

THDISQAULA

Dropped connections at bad quality uplink

Data Source

BSC_IOG20_APG40

Source Field

THDISQAULA

Source Section

CLTCHDRAH

THDISQAULSUB

Dropped connections at bad quality uplink in overlaid subcell

Data Source

BSC_IOG20_APG40

Source Field

THDISQAULSUB

Source Section

CLTCHDRH

THDISQAULSUBA

Dropped connections at bad quality uplink in overlaid subcell

Data Source

BSC_IOG20_APG40

Source Field

THDISQAULSUBA

Source Section

CLTCHDRAH

THDISSBL

Dropped connections at low signal strength bothlink

Data Source

BSC_IOG20_APG40

Source Field

THDISSBL

Source Section

CLTCHDRH

THDISSBLA

Dropped connections at low signal strength bothlink

Data Source

BSC_IOG20_APG40

Source Field

THDISSBLA

Source Section

CLTCHDRAH

THDISSBLSUB

Dropped connections at low signal strength bothlink in overlaid subcell

Data Source

BSC_IOG20_APG40

Source Field

THDISSBLSUB

Source Section

CLTCHDRH

THDISSBLSUBA

Dropped connections at low signal strength bothlink in overlaid subcell

Data Source

BSC_IOG20_APG40

Source Field

THDISSBLSUBA

Source Section

CLTCHDRAH

THDISSDL

Dropped connections at low signal strength downlink

Data Source

BSC_IOG20_APG40

Source Field

THDISSDL

Source Section

CLTCHDRH

THDISSDLA

Dropped connections at low signal strength downlink

Data Source

BSC_IOG20_APG40

Source Field

THDISSDLA

Source Section

CLTCHDRAH

THDISSDLSUB

Dropped connections at low signal strength downlink in overlaid subcell

Data Source

BSC_IOG20_APG40

Source Field

THDISSDLSUB

Source Section

CLTCHDRH

THDISSDLSUBA

Dropped connections at low signal strength downlink in overlaid subcell

Data Source

BSC_IOG20_APG40

Source Field

THDISSDLSUBA

Source Section

CLTCHDRAH

THDISSS1

Dropped connections for classmark 1 MSs at low signal strength downlink or uplink.

Data Source

BSC_IOG20_APG40

Source Field

THDISSS1

Source Section

CLTCHDRH

THDISSS2

Dropped connections for classmark 2 MSs at low signal strength downlink or uplink.

Data Source

BSC_IOG20_APG40

Source Field

THDISSS2

Source Section

CLTCHDRH

THDISSS3

Dropped connections for classmark 3 MSs at low signal strength downlink or uplink.

Data Source

BSC_IOG20_APG40

Source Field

THDISSS3

Source Section

CLTCHDRH

THDISSS4

Dropped connections for classmark 4 MSs at low signal strength downlink or uplink.

Data Source

BSC_IOG20_APG40

Source Field

THDISSS4

Source Section

CLTCHDRH

THDISSS5

Dropped connections for classmark 5 MSs at low signal strength downlink or uplink.

Data Source

BSC_IOG20_APG40

Source Field

THDISSS5

Source Section

CLTCHDRH

THDISSUL

Dropped connections at low signal strength uplink

Data Source

BSC_IOG20_APG40

Source Field

THDISSUL

Source Section

CLTCHDRH

THDISSULA

Dropped connections at low signal strength uplink

Data Source

BSC_IOG20_APG40

Source Field

THDISSULA

Source Section

CLTCHDRAH

THDISSULSUB

Dropped connections at low signal strength uplink in overlaid subcell

Data Source

BSC_IOG20_APG40

Source Field

THDISSULSUB

Source Section

CLTCHDRH

THDISSULSUBA

Dropped connections at low signal strength uplink in overlaid subcell

Data Source

BSC_IOG20_APG40

Source Field

THDISSULSUBA

Source Section

CLTCHDRAH

THDISTA

Dropped connections at excessive TA

Data Source

BSC_IOG20_APG40

Source Field

THDISTA

Source Section

CLTCHDRH

THDISTAA

Dropped connections at excessive TA

Data Source

BSC_IOG20_APG40

Source Field

THDISTAA

Source Section

CLTCHDRAH

THFERBLDIS0

FER drop calls, HR bothlink, for CHGRP0.

Data Source

BSC_IOG20_APG40

Source Field

THFERBLDIS0

Source Section

CHGRP0H

THFERDLDIS0

FER drop calls, HR downlink, for CHGRP0.

Data Source

BSC_IOG20_APG40

Source Field

THFERDLDIS0

Source Section

CHGRP0H

THFERULDIS0

FER drop calls, HR uplink, for CHGRP0.

Data Source

BSC_IOG20_APG40

Source Field

THFERULDIS0

Source Section

CHGRP0H

THMSESTB

Successful MS channel establishment on TCHs

Data Source

BSC_IOG20_APG40

Source Field

THMSESTB

Source Section

CELTCHH

THMSESTBSUB

Successful MS channel establishment on TCHs for overlaid subcell

Data Source

BSC_IOG20_APG40

Source Field

THMSESTBSUB

Source Section

CELTCHH

THNCEDROP

Number of dropped connections that occur in underlaid subcell when a subscriber to subscriber connection is established. This is between the DTAP messages Connect Acknowledge and Release or Disconnect.

Data Source

BSC_IOG20_APG40

Source Field

THNCEDROP

Source Section

CELTCHH

THNCEDROPSUB

Number of dropped connections that occur in overlaid subcell when a subscriber to subscriber connection is established. This is between the DTAP messages Connect

Data Source

BSC_IOG20_APG40

Source Field

THNCEDROPSUB

Source Section

CELTCHH

THNDROP

Dropped connections due to failure.

Data Source

BSC_IOG20_APG40

Source Field

THNDROP

Source Section

CELTCHH

THNDROP0

Total dropped TCH/H connections in CHGRP0

Data Source

BSC_IOG20_APG40

Source Field

THNDROP0

Source Section

CHGRP0H

THNDROPSUB

Dropped connections in overlaid subcell due to failure.

Data Source

BSC_IOG20_APG40

Source Field

THNDROPSUB

Source Section

CELTCHH

THNRELCONG

nr of released TCH due to radio resource congestion

Data Source

BSC_IOG20_APG40

Source Field

THNRELCONG

Source Section

CELTCHH

THNRELCONGSUB

nr of released TCH due to radio resource congestion in overlaid subcell

Data Source

BSC_IOG20_APG40

Source Field

THNRELCONGSUB

Source Section

CELTCHH

THNSCAN

nr of accumulations of traffic level counter

Data Source

BSC_IOG20_APG40

Source Field

THNSCAN

Source Section

CELTCHH

THNSCAN_SUM

nr of accumulations of traffic level counter

Data Source

BSC_IOG20_APG40

Source Field

THNSCAN

Source Section

CELTCHH

THQABLDIS0

Dropped connection, bad quality both links

Data Source

BSC_IOG20_APG40

Source Field

THQABLDIS0

Source Section

CHGRP0H

THQADLDIS0

Dropped connection, bad quality downlink

Data Source

BSC_IOG20_APG40

Source Field

THQADLDIS0

Source Section

CHGRP0H

THQAULDIS0

Dropped connection, bad quality uplink

Data Source

BSC_IOG20_APG40

Source Field

THQAULDIS0

Source Section

CHGRP0H

THSAICTRALACC

Traffic level accumulator for SAIC capable MSs with channel rate HR

Data Source

BSC_APG40

Source Field

THSAICTRALACC

Source Section

CELLMSCAP

THSPV1DTMSUC

Number of successful establishment of a DTM connection in the cell, TCH/HR SPV1

Data Source

BSC_IOG20_APG40

Source Field

THSPV1DTMSUC

Source Section

CLDTMEST

THSPV3DTMSUC

Number of successful establishment of a DTM connection in the cell, TCH/HR SPV3

Data Source

BSC_IOG20_APG40

Source Field

THSPV3DTMSUC

Source Section

CLDTMEST

THSSBLDIS0

Dropped connection, low signal strength both links

Data Source

BSC_IOG20_APG40

Source Field

THSSBLDIS0

Source Section

CHGRP0H

THSSDLDIS0

Dropped connection, low signal strength downlink

Data Source

BSC_IOG20_APG40

Source Field

THSSDLDIS0

Source Section

CHGRP0H

THSSULDIS0

Dropped connection, low signal strength uplink

Data Source

BSC_IOG20_APG40

Source Field

THSSULDIS0

Source Section

CHGRP0H

THSUDLOS

Suddenly lost connections

Data Source

BSC_IOG20_APG40

Source Field

THSUDLOS

Source Section

CLTCHDRH

THSUDLOS0

Suddenly lost connection

Data Source

BSC_IOG20_APG40

Source Field

THSUDLOS0

Source Section

CHGRP0H

THSUDLOSA

Suddenly lost connections

Data Source

BSC_IOG20_APG40

Source Field

THSUDLOSA

Source Section

CLTCHDRAH

THSUDLOSSUB

Suddenly lost connections in overlaid subcell

Data Source

BSC_IOG20_APG40

Source Field

THSUDLOSSUB

Source Section

CLTCHDRH

THSUDLOSSUBA

Suddenly lost connections in overlaid subcell

Data Source

BSC_IOG20_APG40

Source Field

THSUDLOSSUBA

Source Section

CLTCHDRAH

THTADIS0

Dropped connection at excessive TA

Data Source

BSC_IOG20_APG40

Source Field

THTADIS0

Source Section

CHGRP0H

THTCONGS

TCH congestion time

Data Source

BSC_IOG20_APG40

Source Field

THTCONGS

Source Section

CELTCHH

THTCONSUB

TCH congestion time for overlaid subcell

Data Source

BSC_IOG20_APG40

Source Field

THTCONSUB

Source Section

CELTCHH

THTHARDCONGS

Counts the time when all radio resources are occupied (hard congestion) and an allocation attempt is made in the underlaid subcell

Data Source

BSC_IOG20_APG40

Source Field

THTHARDCONGS

Source Section

CELTCHH

THTHARDCONSUB

Counts the time when all radio resources are occupied (hard congestion) and an allocation attempt is made in the overlaid subcell

Data Source

BSC_IOG20_APG40

Source Field

THTHARDCONSUB

Source Section

CELTCHH

THTRALACC

Traffic level accumulator

Data Source

BSC_IOG20_APG40

Source Field

THTRALACC

Source Section

CELTCHH

THTRALACC_SUM

Traffic level accumulator

Data Source

BSC_IOG20_APG40

Source Field

THTRALACC

Source Section

CELTCHH

THTRALACC0

Half-rate traffic level accumulator.

Data Source

BSC_IOG20_APG40

Source Field

THTRALACC0

Source Section

CHGRP0H

THTRALSUB

TCH traffic level accumulated in overlaid subcell.

Data Source

BSC_IOG20_APG40

Source Field

THTRALSUB

Source Section

CELTCHH

THV1CALLS

Call attempt counter

Data Source

BSC_IOG20_APG40

Source Field

THV1CALLS

Source Section

CLTCHHV1

THV1CALLSSUB

Call attempt counter for overlaid subcell

Data Source

BSC_IOG20_APG40

Source Field

THV1CALLSSUB

Source Section

CLTCHHV1

THV1CONGSAS

nr of congestion at assignment

Data Source

BSC_IOG20_APG40

Source Field

THV1CONGSAS

Source Section

CLTCHHV1

THV1CONGSASSUB

nr of congestion at assignment overlaid subcell

Data Source

BSC_IOG20_APG40

Source Field

THV1CONGSASSUB

Source Section

CLTCHHV1

THV1CONGSHO

nr of congestion at handover

Data Source

BSC_IOG20_APG40

Source Field

THV1CONGSHO

Source Section

CLTCHHV1

THV1CONGSHOSUB

nr of congestion at handover overlaid subcell

Data Source

BSC_IOG20_APG40

Source Field

THV1CONGSHOSUB

Source Section

CLTCHHV1

THV1FER

Number of erased frames for TCH/H SPV1

Data Source

BSC_IOG20_APG40

Source Field

THV1FER

Source Section

CELLFERH

THV1FERTF

Number of transmitted frames for TCH/H SPV1

Data Source

BSC_IOG20_APG40

Source Field

THV1FERTF

Source Section

CELLFERH

THV1NSCAN

nr of accumulations of traffic level counter

Data Source

BSC_IOG20_APG40

Source Field

THV1NSCAN

Source Section

CLTCHHV1

THV1TCONGS

TCH congestion time

Data Source

BSC_IOG20_APG40

Source Field

THV1TCONGS

Source Section

CLTCHHV1

THV1TCONSUB

TCH congestion time for overlaid subcell

Data Source

BSC_IOG20_APG40

Source Field

THV1TCONSUB

Source Section

CLTCHHV1

THV1TRALACC

Traffic level accumulator

Data Source

BSC_IOG20_APG40

Source Field

THV1TRALACC

Source Section

CLTCHHV1

THV1TRALACC_SUM

Traffic level accumulator

Data Source

BSC_IOG20_APG40

Source Field

THV1TRALACC

Source Section

CLTCHHV1

THV1TRALSUB

TCH traffic level accumulated in overlaid subcell.

Data Source

BSC_IOG20_APG40

Source Field

THV1TRALSUB

Source Section

CLTCHHV1

THV2CALLS

Call attempt counter

Data Source

BSC_IOG20_APG40

Source Field

THV2CALLS

Source Section

CLTCHHV2

THV2CALLSSUB

Call attempt counter for overlaid subcell

Data Source

BSC_IOG20_APG40

Source Field

THV2CALLSSUB

Source Section

CLTCHHV2

THV2CONGSAS

Number of congestion at assignment (assignment or immediate assignment fails due to no idle channels are available)

Data Source

BSC_IOG20_APG40

Source Field

THV2CONGSAS

Source Section

CLTCHHV2

THV2CONGSASSUB

Number of congestion at assignment,overlaid subcell (assignment or immediate assignment fails due to no idle channels are available)

Data Source

BSC_IOG20_APG40

Source Field

THV2CONGSASSUB

Source Section

CLTCHHV2

THV2CONGSHO

Number of congestion at handover(assignment or immediate assignment fails due to no idle channels are available)

Data Source

BSC_IOG20_APG40

Source Field

THV2CONGSHO

Source Section

CLTCHHV2

THV2CONGSHOSUB

Number of congestion at handover,overlaid subcell (assignment or immediate assignment fails due to no idle channels are available)

Data Source

BSC_IOG20_APG40

Source Field

THV2CONGSHOSUB

Source Section

CLTCHHV2

THV2NSCAN

Number of accumulations of traffic level counter

Data Source

BSC_IOG20_APG40

Source Field

THV2NSCAN

Source Section

CLTCHHV2

THV2TCONGS

TCH congestion time (when an allocation attempt for the required TCH channel is failed due to congestion)

Data Source

BSC_IOG20_APG40

Source Field

THV2TCONGS

Source Section

CLTCHHV2

THV2TCONSUB

TCH congestion time for overlaid subcell (when an allocation attempt for the required TCH channel is failed due to congestion)

Data Source

BSC_IOG20_APG40

Source Field

THV2TCONSUB

Source Section

CLTCHHV2

THV2TRALACC

Traffic level accumulator (Info about number of seized channels in the cell)

Data Source

BSC_IOG20_APG40

Source Field

THV2TRALACC

Source Section

CLTCHHV2

THV2TRALSUB

Traffic level accumulated in overlaid subcell.

Data Source

BSC_IOG20_APG40

Source Field

THV2TRALSUB

Source Section

CLTCHHV2

THV3CALLS

Call attempt counter

Data Source

BSC_IOG20_APG40

Source Field

THV3CALLS

Source Section

CLTCHHV3

THV3CALLSSUB

Call attempt counter for subcell

Data Source

BSC_IOG20_APG40

Source Field

THV3CALLSSUB

Source Section

CLTCHHV3

THV3CM1DL

Time (number of frames) on TCH/H SPV3 Mode 1 downlink

Data Source

BSC_IOG20_APG40

Source Field

THV3CM1DL

Source Section

CLTCHHV3C

THV3CM1UL

Time (number of frames) on TCH/H SPV3 Mode 1 uplink

Data Source

BSC_IOG20_APG40

Source Field

THV3CM1UL

Source Section

CLTCHHV3C

THV3CM2DL

Time (number of frames) on TCH/H SPV3 Mode 2 downlink

Data Source

BSC_IOG20_APG40

Source Field

THV3CM2DL

Source Section

CLTCHHV3C

THV3CM2UL

Time (number of frames) on TCH/H SPV3 Mode 2 uplink

Data Source

BSC_IOG20_APG40

Source Field

THV3CM2UL

Source Section

CLTCHHV3C

THV3CM3DL

Time (number of frames) on TCH/H SPV3 Mode 3 downlink

Data Source

BSC_IOG20_APG40

Source Field

THV3CM3DL

Source Section

CLTCHHV3C

THV3CM3UL

Time (number of frames) on TCH/H SPV3 Mode 3 uplink

Data Source

BSC_IOG20_APG40

Source Field

THV3CM3UL

Source Section

CLTCHHV3C

THV3CM4DL

Time (number of frames) on TCH/H SPV3 Mode 4 downlink

Data Source

BSC_IOG20_APG40

Source Field

THV3CM4DL

Source Section

CLTCHHV3C

THV3CM4UL

Time (number of frames) on TCH/H SPV3 Mode 4 uplink

Data Source

BSC_IOG20_APG40

Source Field

THV3CM4UL

Source Section

CLTCHHV3C

THV3CONGSAS

Number of congestion at assignment

Data Source

BSC_IOG20_APG40

Source Field

THV3CONGSAS

Source Section

CLTCHHV3

THV3CONGSASSUB

Number of congestion at assignment, overlaid subcell

Data Source

BSC_IOG20_APG40

Source Field

THV3CONGSASSUB

Source Section

CLTCHHV3

THV3CONGSHO

Number of congestion at handover

Data Source

BSC_IOG20_APG40

Source Field

THV3CONGSHO

Source Section

CLTCHHV3

THV3CONGSHOSUB

Number of congestion at handover, overlaid subcell

Data Source

BSC_IOG20_APG40

Source Field

THV3CONGSHOSUB

Source Section

CLTCHHV3

THV3FERCM1

Number of erased frames for TCH/H SPV3 Mode 1

Data Source

BSC_IOG20_APG40

Source Field

THV3FERCM1

Source Section

CELLFERH

THV3FERCM2

Number of erased frames for TCH/H SPV3 Mode 2

Data Source

BSC_IOG20_APG40

Source Field

THV3FERCM2

Source Section

CELLFERH

THV3FERCM3

Number of erased frames for TCH/H SPV3 Mode 3

Data Source

BSC_IOG20_APG40

Source Field

THV3FERCM3

Source Section

CELLFERH

THV3FERCM4

Number of erased frames for TCH/H SPV3 Mode 4

Data Source

BSC_IOG20_APG40

Source Field

THV3FERCM4

Source Section

CELLFERH

THV3NSCAN

Number of accumulations of traffic level counter

Data Source

BSC_IOG20_APG40

Source Field

THV3NSCAN

Source Section

CLTCHHV3

THV3TCONGS

TCH congestion time

Data Source

BSC_IOG20_APG40

Source Field

THV3TCONGS

Source Section

CLTCHHV3

THV3TCONSUB

TCH congestion time for subcell

Data Source

BSC_IOG20_APG40

Source Field

THV3TCONSUB

Source Section

CLTCHHV3

THV3TFCM1

Number of transmitted frames for TCH/H SPV3 Mode 1

Data Source

BSC_IOG20_APG40

Source Field

THV3TFCM1

Source Section

CELLFERH

THV3TFCM2

Number of transmitted frames for TCH/H SPV3 Mode 2

Data Source

BSC_IOG20_APG40

Source Field

THV3TFCM2

Source Section

CELLFERH

THV3TFCM3

Number of transmitted frames for TCH/H SPV3 Mode 3

Data Source

BSC_IOG20_APG40

Source Field

THV3TFCM3

Source Section

CELLFERH

THV3TFCM4

Number of transmitted frames for TCH/H SPV3 Mode 4

Data Source

BSC_IOG20_APG40

Source Field

THV3TFCM4

Source Section

CELLFERH

THV3TRALACC

Traffic level accumulator

Data Source

BSC_IOG20_APG40

Source Field

THV3TRALACC

Source Section

CLTCHHV3

THV3TRALSUB

TCH traffic level accumulated in subcell

Data Source

BSC_IOG20_APG40

Source Field

THV3TRALSUB

Source Section

CLTCHHV3

TIME_CELLEVENT

Total Time in seconds.

Data Source

BSC_IOG20_APG40

Source Field

TIME

Source Section

CELLEVENT

TIMEHCSOUT

Accumulated time in seconds when the serving cell's channel availability is below or equal to HCSOUT.

Data Source

BSC_IOG20_APG40

Source Field

TIMEHCSOUT

Source Section

CELLHCS

TNUCHCNT

Number of defined channels.The counter is set by command.

Data Source

BSC_IOG20_APG40

Source Field

TNUCHCNT

Source Section

CLTCH

TNUCHSUB

Number of defined channels in overlaid subcell, set by command.

Data Source

BSC_IOG20_APG40

Source Field

TNUCHSUB

Source Section

CLTCH

TOTCLSTIME

The total time the cell is active for cell load sharing (in seconds).

Data Source

BSC_IOG20_APG40

Source Field

TOTCLSTIME

Source Section

CELEVENTH

TRAFF2BTBFSCAN

nr of TBFs mode BASIC scanned during the measurement period.

Data Source

BSC_IOG20_APG40

Source Field

TRAFF2BTBFSCAN

Source Section

TRAFGPRS2

TRAFF2ETBFSCAN

nr of TBFs mode EGPRS scanned during the measurement period.

Data Source

BSC_IOG20_APG40

Source Field

TRAFF2ETBFSCAN

Source Section

TRAFGPRS2

TRAFF2GTBFSCAN

nr of TBFs mode GPRS scanned during the measurement period.

Data Source

BSC_IOG20_APG40

Source Field

TRAFF2GTBFSCAN

Source Section

TRAFGPRS2

TRAFFDLGPRSSCAN

nr of accumulation of DL TBFs and PDCHs.

Data Source

BSC_IOG20_APG40

Source Field

TRAFFDLGPRSSCAN

Source Section

TRAFDLGPRS

TRAFFGPRSSCAN

nr of accumulation of TBFs and PDCHs.

Data Source

BSC_IOG20_APG40

Source Field

TRAFFGPRSSCAN

Source Section

TRAFFGPRS

TRAFFULGPRSSCAN

nr of accumulation of UL TBFs and PDCHs.

Data Source

BSC_IOG20_APG40

Source Field

TRAFFULGPRSSCAN

Source Section

TRAFULGPRS

TRAFGPRS2SCAN

Count of the total number of scans of the cell carried out for the multi-slot utilisation and number of simultaneous TBFs on the downlink

Data Source

BSC_IOG20_APG40

Source Field

TRAFGPRS2SCAN

Source Section

TRAFGPRS2

TRAFGPRS3SCAN

Total number of scans of the cell carried out for the number of UL TBFs.

Data Source

BSC_IOG20_APG40

Source Field

TRAFGPRS3SCAN

Source Section

TRAFGPRS3

TRASYNCCNT

TRA synchronisation faults. Incremented when a TRA synchronisation fault is reported by the BTS on one of the TS

Data Source

BSC_IOG20_APG40

Source Field

TRASYNCCNT

Source Section

MOTG

TSMSDWN

SMS message downlink TCH

Data Source

BSC_IOG20_APG40

Source Field

TSMSDWN

Source Section

CLSMS

TSMSUP

SMS message uplink TCH

Data Source

BSC_IOG20_APG40

Source Field

TSMSUP

Source Section

CLSMS

TSQ0ACCPT

Number of measurements with acceptable speech quality in CHGRP0

Data Source

BSC_IOG20_APG40

Source Field

TSQ0ACCPT

Source Section

CHGRP0F

TSQ0ACCPTDL

Number of measurements with acceptable speech quality.

Data Source

BSC_IOG20_APG40

Source Field

TSQ0ACCPTDL

Source Section

CHGRP0SQI

TSQ0AFACCPT

Number of measurements with acceptable speech quality in CHGRP0 when an AMR codec is used and the channel rate is FR

Data Source

BSC_IOG20_APG40

Source Field

TSQ0AFACCPT

Source Section

CHGRP0F

TSQ0AFACCPTDL

Number of measurements with acceptable speech quality, AMR FR.

Data Source

BSC_IOG20_APG40

Source Field

TSQ0AFACCPTDL

Source Section

CHGRP0SQI

TSQ0AFBAD

Number of measurements with unsatisfactory speech quality in CHGRP0 when an AMR codec is used and the channel rate is FR

Data Source

BSC_IOG20_APG40

Source Field

TSQ0AFBAD

Source Section

CHGRP0F

TSQ0AFBADDL

Number of measurements with unsatisfactory speech quality, AMR FR.

Data Source

BSC_IOG20_APG40

Source Field

TSQ0AFBADDL

Source Section

CHGRP0SQI

TSQ0AFGOOD

Number of measurements with good speech quality in CHGRP0 when an AMR codec is used and the channel rate is FR

Data Source

BSC_IOG20_APG40

Source Field

TSQ0AFGOOD

Source Section

CHGRP0F

TSQ0AFGOODDL

Number of measurements with good speech quality, AMR FR.

Data Source

BSC_IOG20_APG40

Source Field

TSQ0AFGOODDL

Source Section

CHGRP0SQI

TSQ0AHACCPT

Number of measurements with acceptable speech quality in channel group zero when an AMR codec is used and the channel rate is HR.

Data Source

BSC_IOG20_APG40

Source Field

TSQ0AHACCPT

Source Section

CHGRP0H

TSQ0AHACCPTDL

Number of measurements with acceptable speech quality, AMR HR.

Data Source

BSC_IOG20_APG40

Source Field

TSQ0AHACCPTDL

Source Section

CHGRP0SQI

TSQ0AHBAD

Number of measurements with unsatisfactory speech quality in channel group zero when an AMR codec is used and the channel rate is HR.

Data Source

BSC_IOG20_APG40

Source Field

TSQ0AHBAD

Source Section

CHGRP0H

TSQ0AHBADDL

Number of measurements with unsatisfactory speech quality, AMR HR.

Data Source

BSC_IOG20_APG40

Source Field

TSQ0AHBADDL

Source Section

CHGRP0SQI

TSQ0AHGOOD

Number of measurements with good speech quality in channel group zero when an AMR codec is used and the channel rate is HR.

Data Source

BSC_IOG20_APG40

Source Field

TSQ0AHGOOD

Source Section

CHGRP0H

TSQ0AHGOODDL

Number of measurements with good speech quality, AMR HR.

Data Source

BSC_IOG20_APG40

Source Field

TSQ0AHGOODDL

Source Section

CHGRP0SQI

TSQ0AWACCPT

Number of measurements with acceptable speech quality in channel group zero when AMR-WB codec is used and the channel rate is FR

Data Source

BSC_APG40

Source Field

TSQ0AWACCPT

Source Section

CHGRP0F

TSQ0AWACCPTDL

Number of measurements with acceptable speech quality in channel group zero when an AMR-WB codec is used and the channel rate is FR downlink.

Data Source

BSC_APG40

Source Field

TSQ0AWACCPTDL

Source Section

CHGRP0SQI

TSQ0AWBAD

Number of measurements with unsatisfactory speech quality in channel group zero when AMR-WB codec is used and the channel rate is FR

Data Source

BSC_APG40

Source Field

TSQ0AWBAD

Source Section

CHGRP0F

TSQ0AWBADDL

Number of measurements with unsatisfactory speech quality in channel group zero when an AMR-WB codec is used and the channel rate is FR downlink.

Data Source

BSC_APG40

Source Field

TSQ0AWBADDL

Source Section

CHGRP0SQI

TSQ0AWGOOD

Number of measurements with good speech quality in channel group zero when an Adaptive Multirate WideBand Codec (AMR-WB) codec is used and the channel rate is FR

Data Source

BSC_APG40

Source Field

TSQ0AWGOOD

Source Section

CHGRP0F

TSQ0AWGOODDL

Number of measurements with good speech quality in channel group zero when an Adaptive Multirate Codec WideBand (AMR-WB) codec is used and the channel rate is FR downlink.

Data Source

BSC_APG40

Source Field

TSQ0AWGOODDL

Source Section

CHGRP0SQI

TSQ0BAD

Number of measurements with unsatisfactory speech quality in CHGRP0

Data Source

BSC_IOG20_APG40

Source Field

TSQ0BAD

Source Section

CHGRP0F

TSQ0BADDL

Number of measurements with unsatisfactory speech quality.

Data Source

BSC_IOG20_APG40

Source Field

TSQ0BADDL

Source Section

CHGRP0SQI

TSQ0GOOD

Number of measurements with good speech quality in CHGRP0

Data Source

BSC_IOG20_APG40

Source Field

TSQ0GOOD

Source Section

CHGRP0F

TSQ0GOODDL

Number of measurements with good speech quality.

Data Source

BSC_IOG20_APG40

Source Field

TSQ0GOODDL

Source Section

CHGRP0SQI

TSQIACCPT

measurements with acceptable speech quality

Data Source

BSC_IOG20_APG40

Source Field

TSQIACCPT

Source Section

CELLSQI

TSQIACCPTAF

Number of measurements with acceptable speech quality when the channel rate is TCH/F and the speech version is SPV3.

Data Source

BSC_IOG20_APG40

Source Field

TSQIACCPTAF

Source Section

CELLSQI

TSQIACCPTAFDL

Number of measurements with acceptable speech quality, AMR FR.

Data Source

BSC_IOG20_APG40

Source Field

TSQIACCPTAFDL

Source Section

CELLSQIDL

TSQIACCPTAH

Number of measurements with acceptable speech quality when the channel rate is TCH/H and the speech version is SPV3

Data Source

BSC_IOG20_APG40

Source Field

TSQIACCPTAH

Source Section

CELLSQI

TSQIACCPTAHDL

Number of measurements with acceptable speech quality, AMR HR.

Data Source

BSC_IOG20_APG40

Source Field

TSQIACCPTAHDL

Source Section

CELLSQIDL

TSQIACCPTAW

Number of measurements with acceptable speech quality when the channel rate is TCH/F and the speech version is SPV5.

Data Source

BSC_APG40

Source Field

TSQIACCPTAW

Source Section

CELLSQI

TSQIACCPTAWDL

Number of measurements with acceptable speech quality when the channel rate is TCH/F and the speech version is SPV5 on downlink.

Data Source

BSC_APG40

Source Field

TSQIACCPTAWDL

Source Section

CELLSQIDL

TSQIACCPTDL

Number of measurements with acceptable speech quality.

Data Source

BSC_IOG20_APG40

Source Field

TSQIACCPTDL

Source Section

CELLSQIDL

TSQIACCPTSUB

Number of measurements with acceptable speech quality in overlaid subcell

Data Source

BSC_IOG20_APG40

Source Field

TSQIACCPTSUB

Source Section

CELLSQI

TSQIACCPTSUBAF

Number of measurements with acceptable speech quality in overlaid subcell when the channel rate is TCH/F and the speech version is SPV3

Data Source

BSC_IOG20_APG40

Source Field

TSQIACCPTSUBAF

Source Section

CELLSQI

TSQIACCPTSUBAFDL

Number of measurements with acceptable speech quality in overlaid subcell, AMR FR.

Data Source

BSC_IOG20_APG40

Source Field

TSQIACCPTSUBAFDL

Source Section

CELLSQIDL

TSQIACCPTSUBAH

Number of measurements with acceptable speech quality in overlaid subcell when the channel rate is TCH/H and the speech version is SPV3

Data Source

BSC_IOG20_APG40

Source Field

TSQIACCPTSUBAH

Source Section

CELLSQI

TSQIACCPTSUBAHDL

Number of measurements with acceptable speech quality in overlaid subcell, AMR HR.

Data Source

BSC_IOG20_APG40

Source Field

TSQIACCPTSUBAHDL

Source Section

CELLSQIDL

TSQIACCPTSUBAW

Number of measurements with acceptable speech quality in overlaid subcell when the channel rate is TCH/F and the speech version is SPV5.

Data Source

BSC_APG40

Source Field

TSQIACCPTSUBAW

Source Section

CELLSQI

TSQIACCPTSUBAWDL

Number of measurements with acceptable speech quality in overlaid subcell when the channel rate is TCH/F and the speech version is SPV5 on downlink.

Data Source

BSC_APG40

Source Field

TSQIACCPTSUBAWDL

Source Section

CELLSQIDL

TSQIACCPTSUBDL

Number of measurements with acceptable speech quality in overlaid subcell.

Data Source

BSC_IOG20_APG40

Source Field

TSQIACCPTSUBDL

Source Section

CELLSQIDL

TSQIBAD

measurements with bad speech quality

Data Source

BSC_IOG20_APG40

Source Field

TSQIBAD

Source Section

CELLSQI

TSQIBADAF

Number of measurements with unsatisfactory speech quality when the channel rate is TCH/F and the speech version is SPV3

Data Source

BSC_IOG20_APG40

Source Field

TSQIBADAF

Source Section

CELLSQI

TSQIBADAFDL

Number of measurements with unsatisfactory speech quality, AMR FR.

Data Source

BSC_IOG20_APG40

Source Field

TSQIBADAFDL

Source Section

CELLSQIDL

TSQIBADAH

Number of measurements with unsatisfactory speech quality when the channel rate is TCH/H and the speech version is SPV3

Data Source

BSC_IOG20_APG40

Source Field

TSQIBADAH

Source Section

CELLSQI

TSQIBADAHDL

Number of measurements with unsatisfactory speech quality, AMR HR.

Data Source

BSC_IOG20_APG40

Source Field

TSQIBADAHDL

Source Section

CELLSQIDL

TSQIBADAW

Number of measurements with unsatisfactory speech quality when the channel rate is TCH/F and the speech version is SPV5 on downlink.

Data Source

BSC_APG40

Source Field

TSQIBADAW

Source Section

CELLSQI

TSQIBADAWDL

Number of measurements with unsatisfactory speech quality when the channel rate is TCH/F and the speech version is SPV5.

Data Source

BSC_APG40

Source Field

TSQIBADAWDL

Source Section

CELLSQIDL

TSQIBADDL

Number of measurements with unsatisfactory speech quality.

Data Source

BSC_IOG20_APG40

Source Field

TSQIBADDL

Source Section

CELLSQIDL

TSQIBADSUB

Number of measurements with bad speech quality in overlaid subcell

Data Source

BSC_IOG20_APG40

Source Field

TSQIBADSUB

Source Section

CELLSQI

TSQIBADSUBAF

Number of measurements with unsatisfactory speech quality in overlaid subcell when the channel rate is TCH/F and the speech version is SPV3

Data Source

BSC_IOG20_APG40

Source Field

TSQIBADSUBAF

Source Section

CELLSQI

TSQIBADSUBAFDL

Number of measurements with unsatisfactory speech quality in overlaid subcell, AMR FR.

Data Source

BSC_IOG20_APG40

Source Field

TSQIBADSUBAFDL

Source Section

CELLSQIDL

TSQIBADSUBAH

Number of measurements with unsatisfactory speech quality in overlaid subcell when the channel rate is TCH/H and the speech version is SPV3

Data Source

BSC_IOG20_APG40

Source Field

TSQIBADSUBAH

Source Section

CELLSQI

TSQIBADSUBAHDL

Number of measurements with unsatisfactory speech quality in overlaid subcell, AMR HR.

Data Source

BSC_IOG20_APG40

Source Field

TSQIBADSUBAHDL

Source Section

CELLSQIDL

TSQIBADSUBAW

Number of measurements with unsatisfactory speech quality in overlaid subcell when the channel rate is TCH/F and the speech version is SPV3.

Data Source

BSC_APG40

Source Field

TSQIBADSUBAW

Source Section

CELLSQI

TSQIBADSUBAWDL

Number of measurements with unsatisfactory speech quality in overlaid subcell when the channel rate is TCH/F and the speech version is SPV5 on downlink.

Data Source

BSC_APG40

Source Field

TSQIBADSUBAWDL

Source Section

CELLSQIDL

TSQIBADSUBDL

Number of measurements with unsatisfactory speech quality in overlaid subcell.

Data Source

BSC_IOG20_APG40

Source Field

TSQIBADSUBDL

Source Section

CELLSQIDL

TSQIGOOD

measurements with good speech quality

Data Source

BSC_IOG20_APG40

Source Field

TSQIGOOD

Source Section

CELLSQI

TSQIGOODAF

Number of measurements with good speech quality when the channel rate is TCH/F and the speech version is SPV3

Data Source

BSC_IOG20_APG40

Source Field

TSQIGOODAF

Source Section

CELLSQI

TSQIGOODAFDL

Number of measurements with good speech quality, AMR FR.

Data Source

BSC_IOG20_APG40

Source Field

TSQIGOODAFDL

Source Section

CELLSQIDL

TSQIGOODAH

Number of measurements with good speech quality when the channel rate is TCH/H and the speech version is SPV3

Data Source

BSC_IOG20_APG40

Source Field

TSQIGOODAH

Source Section

CELLSQI

TSQIGOODAHDL

Number of measurements with good speech quality, AMR HR.

Data Source

BSC_IOG20_APG40

Source Field

TSQIGOODAHDL

Source Section

CELLSQIDL

TSQIGOODAW

Number of measurements with good speech quality when the channel rate is TCH/F and the speech version is SPV5.

Data Source

BSC_APG40

Source Field

TSQIGOODAW

Source Section

CELLSQI

TSQIGOODAWDL

Number of measurements with good speech quality when the channel rate is TCH/F and the speech version is SPV5 on downlink.

Data Source

BSC_APG40

Source Field

TSQIGOODAWDL

Source Section

CELLSQIDL

TSQIGOODDL

Number of measurements with good speech quality.

Data Source

BSC_IOG20_APG40

Source Field

TSQIGOODDL

Source Section

CELLSQIDL

TSQIGOODSUB

Number of measurements with good speech quality in overlaid subcell

Data Source

BSC_IOG20_APG40

Source Field

TSQIGOODSUB

Source Section

CELLSQI

TSQIGOODSUBAF

Number of measurements with good speech quality in overlaid subcell when the channel rate is TCH/F and the speech version is SPV3

Data Source

BSC_IOG20_APG40

Source Field

TSQIGOODSUBAF

Source Section

CELLSQI

TSQIGOODSUBAFDL

Number of measurements with good speech quality in overlaid subcell, AMR FR.

Data Source

BSC_IOG20_APG40

Source Field

TSQIGOODSUBAFDL

Source Section

CELLSQIDL

TSQIGOODSUBAH

Number of measurements with good speech quality in overlaid subcell when the channel rate is TCH/H and the speech version is SPV3.

Data Source

BSC_IOG20_APG40

Source Field

TSQIGOODSUBAH

Source Section

CELLSQI

TSQIGOODSUBAHDL

Number of measurements with good speech quality in overlaid subcell, AMR HR.

Data Source

BSC_IOG20_APG40

Source Field

TSQIGOODSUBAHDL

Source Section

CELLSQIDL

TSQIGOODSUBAW

Number of measurements with good speech quality in overlaid subcell when the channel rate is TCH/F and the speech version is SPV5.

Data Source

BSC_APG40

Source Field

TSQIGOODSUBAW

Source Section

CELLSQI

TSQIGOODSUBAWDL

Number of measurements with good speech quality in overlaid subcell when the channel rate is TCH/F and the speech version is SPV5 on downlink.

Data Source

BSC_APG40

Source Field

TSQIGOODSUBAWDL

Source Section

CELLSQIDL

TSQIGOODSUBDL

Number of measurements with good speech quality in overlaid subcell.

Data Source

BSC_IOG20_APG40

Source Field

TSQIGOODSUBDL

Source Section

CELLSQIDL

TWDISFERBLA

Number of dropped connection, FER bothlink.

Data Source

BSC_APG40

Source Field

TWDISFERBLA

Source Section

CLTCHDRAW

TWDISFERBLSUBA

Number of dropped connection, FER bothlink, OL subcell.

Data Source

BSC_APG40

Source Field

TWDISFERBLSUBA

Source Section

CLTCHDRAW

TWDISFERDLA

Number of dropped connection, FER DL.

Data Source

BSC_APG40

Source Field

TWDISFERDLA

Source Section

CLTCHDRAW

TWDISFERDLSUBA

Number of dropped connection, FER DL, OL subcell.

Data Source

BSC_APG40

Source Field

TWDISFERDLSUBA

Source Section

CLTCHDRAW

TWDISFERULA

Number of dropped connection, FER UL.

Data Source

BSC_APG40

Source Field

TWDISFERULA

Source Section

CLTCHDRAW

TWDISFERULSUBA

Number of dropped connection, FER UL, OL subcell.

Data Source

BSC_APG40

Source Field

TWDISFERULSUBA

Source Section

CLTCHDRAW

TWDISQABLA

Number of dropped connection, bad quality bothlink.

Data Source

BSC_APG40

Source Field

TWDISQABLA

Source Section

CLTCHDRAW

TWDISQABLSUBA

Number of dropped connection, bad quality bothlink, OL subcell.

Data Source

BSC_APG40

Source Field

TWDISQABLSUBA

Source Section

CLTCHDRAW

TWDISQADLA

Number of dropped connection, bad quality DL.

Data Source

BSC_APG40

Source Field

TWDISQADLA

Source Section

CLTCHDRAW

TWDISQADLSUBA

Number of dropped connection, bad quality DL, OL subcell.

Data Source

BSC_APG40

Source Field

TWDISQADLSUBA

Source Section

CLTCHDRAW

TWDISQAULA

Number of dropped connection, bad quality UL.

Data Source

BSC_APG40

Source Field

TWDISQAULA

Source Section

CLTCHDRAW

TWDISQAULSUBA

Number of dropped connection, bad quality UL, OL subcell.

Data Source

BSC_APG40

Source Field

TWDISQAULSUBA

Source Section

CLTCHDRAW

TWDISSBLA

Number of dropped connection, low SS bothlink.

Data Source

BSC_APG40

Source Field

TWDISSBLA

Source Section

CLTCHDRAW

TWDISSBLSUBA

Number of dropped connection, low SS bothlink, OL subcell.

Data Source

BSC_APG40

Source Field

TWDISSBLSUBA

Source Section

CLTCHDRAW

TWDISSDLA

Number of dropped connection, low SignalStrength DL.

Data Source

BSC_APG40

Source Field

TWDISSDLA

Source Section

CLTCHDRAW

TWDISSDLSUBA

Number of dropped connection, low SS DL, OL subcell.

Data Source

BSC_APG40

Source Field

TWDISSDLSUBA

Source Section

CLTCHDRAW

TWDISSULA

Number of dropped connection, low SS UL.

Data Source

BSC_APG40

Source Field

TWDISSULA

Source Section

CLTCHDRAW

TWDISSULSUBA

Number of dropped connection, low SS UL, OL subcell.

Data Source

BSC_APG40

Source Field

TWDISSULSUBA

Source Section

CLTCHDRAW

TWDISTAA

Number of dropped connection at excessive TA.

Data Source

BSC_APG40

Source Field

TWDISTAA

Source Section

CLTCHDRAW

TWSUDLOSA

Number of suddenly lost connection.

Data Source

BSC_APG40

Source Field

TWSUDLOSA

Source Section

CLTCHDRAW

TWSUDLOSSUBA

Number of suddenly lost connection, OL subcell.

Data Source

BSC_APG40

Source Field

TWSUDLOSSUBA

Source Section

CLTCHDRAW

ULACTBPDCH

Number of B-PDCHs that carried one or more active TBFs of any mode, UL.

Data Source

BSC_IOG20_APG40

Source Field

ULACTBPDCH

Source Section

TRAFULGPRS

ULACTEPDCH

Number of E-PDCHs that carried one or more active TBFs of any mode, UL.

Data Source

BSC_IOG20_APG40

Source Field

ULACTEPDCH

Source Section

TRAFULGPRS

ULACTGPDC

Number of G-PDCHs that carried one or more active TBFs of any mode, UL.

Data Source

BSC_IOG20_APG40

Source Field

ULACTGPDC

Source Section

TRAFULGPRS

ULACTTBFPBPDCH

Sum of simultaneous active TBFs (all TBF modes) on each and every B-PDCH, UL.

Data Source

BSC_IOG20_APG40

Source Field

ULACTTBFPBPDCH

Source Section

TRAFULGPRS

ULACTTBFPEPDCH

Sum of simultaneous active TBFs (all TBF modes) on each and every E-PDCH, UL.

Data Source

BSC_IOG20_APG40

Source Field

ULACTTBFPEPDCH

Source Section

TRAFULGPRS

ULACTTBFPGPDCH

Sum of simultaneous active TBFs (all TBF modes) on each and every G-PDCH, UL.

Data Source

BSC_IOG20_APG40

Source Field

ULACTTBFPGPDCH

Source Section

TRAFULGPRS

ULBGEGDATA

Accumulated LLC PDU data for active EGPRS, UL and QoS class Background PFCs.

Data Source

BSC_IOG20_APG40

Source Field

ULBGEGDATA

Source Section

CELLQOSEG

ULBGEGPFC

Accumulated nr of active PFCs for EGPRS, UL and QoS class Background PFCs.

Data Source

BSC_IOG20_APG40

Source Field

ULBGEGPFC

Source Section

CELLQOSEG

ULBGEGTHR

Accumulated throughput per active PFC for EGPRS, UL and QoS class Background PFCs.

Data Source

BSC_IOG20_APG40

Source Field

ULBGEGTHR

Source Section

CELLQOSEG

ULBGGDATA

Accumulated LLC PDU data for active GPRS, UL and QoS class Background PFCs.

Data Source

BSC_IOG20_APG40

Source Field

ULBGGDATA

Source Section

CELLQOSG

ULBGGPFC

Accumulated nr of active PFCs for GPRS, UL and QoS class Background PFCs.

Data Source

BSC_IOG20_APG40

Source Field

ULBGGPFC

Source Section

CELLQOSG

ULBGGTHR

Accumulated throughput per active PFC for GPRS, UL and QoS class Background PFCs.

Data Source

BSC_IOG20_APG40

Source Field

ULBGGTHR

Source Section

CELLQOSG

ULBPDCH

nr of B-PDCH that carried one or more UL TBF of any mode.

Data Source

BSC_IOG20_APG40

Source Field

ULBPDCH

Source Section

TRAFULGPRS

ULEPDCH

nr of E-PDCH that carried one or more UL TBF of any mode.

Data Source

BSC_IOG20_APG40

Source Field

ULEPDCH

Source Section

TRAFULGPRS

ULGMMVOL

Counts GMM/SM signalling UL

Data Source

BSC_IOG20_APG40

Source Field

ULGMMVOL

Source Section

CELLGPRS3

ULGPDCH

nr of G-PDCH that carried one or more UL TBF of any mode.

Data Source

BSC_IOG20_APG40

Source Field

ULGPDCH

Source Section

TRAFULGPRS

ULINTBGVOL

Counts Interactive & Background PFCs UL

Data Source

BSC_IOG20_APG40

Source Field

ULINTBGVOL

Source Section

CELLGPRS3

ULMSEGDATA

Accumulated LLC data volume for interactive/background, EGPRS capable MSs, UL.

Data Source

BSC_IOG20_APG40

Source Field

ULMSEGDATA

Source Section

CELLGPRS4

ULMSEGTHR

Accumulated weighted LLC throughput for interactive/background, EGPRS capable MSs, UL.

Data Source

BSC_IOG20_APG40

Source Field

ULMSEGTHR

Source Section

CELLGPRS4

ULMSGDATA

Accumulated LLC data volume for interactive/background, GPRS capable MSs, UL.

Data Source

BSC_IOG20_APG40

Source Field

ULMSGDATA

Source Section

CELLGPRS4

ULMSGTHR

Accumulated weighted LLC throughput for interactive/background, GPRS capable MSs,UL.

Data Source

BSC_IOG20_APG40

Source Field

ULMSGTHR

Source Section

CELLGPRS4

ULSAICVOL

LCC user data volume generated by SAIC capable MSs on UL. GMM/SM signalling is not included.

Data Source

BSC_IOG20_APG40

Source Field

ULSAICVOL

Source Section

CELLGPRS3

ULTBFPBPDCH

Sum of simultaneous UL TBF (all TBF modes) on each and every B-PDCH.

Data Source

BSC_IOG20_APG40

Source Field

ULTBFPBPDCH

Source Section

TRAFULGPRS

ULTBFPEPDCH

Sum of simultaneous UL TBF (all TBF modes) on each and every E-PDCH.

Data Source

BSC_IOG20_APG40

Source Field

ULTBFPEPDCH

Source Section

TRAFULGPRS

ULTBFPGPDCH

Sum of simultaneous UL TBF (all TBF modes) on each and every G-PDCH.

Data Source

BSC_IOG20_APG40

Source Field

ULTBFPGPDCH

Source Section

TRAFULGPRS

ULTHP1EGDATA

Accumulated LLC PDU data for active EGPRS, UL and QoS class THP1 PFCs.

Data Source

BSC_IOG20_APG40

Source Field

ULTHP1EGDATA

Source Section

CELLQOSEG

ULTHP1EGPFC

Accumulated nr of active PFCs for EGPRS, UL and QoS class THP1 PFCs.

Data Source

BSC_IOG20_APG40

Source Field

ULTHP1EGPFC

Source Section

CELLQOSEG

ULTHP1EGTHR

Accumulated throughput per active PFC for EGPRS, UL and QoS class THP1 PFCs.

Data Source

BSC_IOG20_APG40

Source Field

ULTHP1EGTHR

Source Section

CELLQOSEG

ULTHP1GDATA

Accumulated LLC PDU data for active GPRS, UL and QoS class THP1 PFCs.

Data Source

BSC_IOG20_APG40

Source Field

ULTHP1GDATA

Source Section

CELLQOSG

ULTHP1GPFC

Accumulated nr of active PFCs for GPRS, UL and QoS class THP1 PFCs.

Data Source

BSC_IOG20_APG40

Source Field

ULTHP1GPFC

Source Section

CELLQOSG

ULTHP1GTHR

Accumulated throughput per active PFC for GPRS, UL and QoS class THP1 PFCs.

Data Source

BSC_IOG20_APG40

Source Field

ULTHP1GTHR

Source Section

CELLQOSG

ULTHP2EGDATA

Accumulated LLC PDU data for active EGPRS, UL and QoS class THP2 PFCs.

Data Source

BSC_IOG20_APG40

Source Field

ULTHP2EGDATA

Source Section

CELLQOSEG

ULTHP2EGPFC

Accumulated nr of active PFCs for EGPRS, UL and QoS class THP2 PFCs.

Data Source

BSC_IOG20_APG40

Source Field

ULTHP2EGPFC

Source Section

CELLQOSEG

ULTHP2EGTHR

Accumulated throughput per active PFC for EGPRS, UL and QoS class THP2 PFCs.

Data Source

BSC_IOG20_APG40

Source Field

ULTHP2EGTHR

Source Section

CELLQOSEG

ULTHP2GDATA

Accumulated LLC PDU data for active GPRS, UL and QoS class THP2 PFCs.

Data Source

BSC_IOG20_APG40

Source Field

ULTHP2GDATA

Source Section

CELLQOSG

ULTHP2GPFC

Accumulated nr of active PFCs for GPRS, UL and QoS class THP2 PFCs.

Data Source

BSC_IOG20_APG40

Source Field

ULTHP2GPFC

Source Section

CELLQOSG

ULTHP2GTHR

Accumulated throughput per active PFC for GPRS, UL and QoS class THP2 PFCs.

Data Source

BSC_IOG20_APG40

Source Field

ULTHP2GTHR

Source Section

CELLQOSG

ULTHP3EGDATA

Accumulated LLC PDU data for active EGPRS, UL and QoS class THP3 PFCs.

Data Source

BSC_IOG20_APG40

Source Field

ULTHP3EGDATA

Source Section

CELLQOSEG

ULTHP3EGPFC

Accumulated nr of active PFCs for EGPRS, UL and QoS class THP3 PFCs.

Data Source

BSC_IOG20_APG40

Source Field

ULTHP3EGPFC

Source Section

CELLQOSEG

ULTHP3EGTHR

Accumulated throughput per active PFC for EGPRS, UL and QoS class THP3 PFCs.

Data Source

BSC_IOG20_APG40

Source Field

ULTHP3EGTHR

Source Section

CELLQOSEG

ULTHP3GDATA

Accumulated LLC PDU data for active GPRS, UL and QoS class THP3 PFCs.

Data Source

BSC_IOG20_APG40

Source Field

ULTHP3GDATA

Source Section

CELLQOSG

ULTHP3GPFC

Accumulated nr of active PFCs for GPRS, UL and QoS class THP3 PFCs.

Data Source

BSC_IOG20_APG40

Source Field

ULTHP3GPFC

Source Section

CELLQOSG

ULTHP3GTHR

Accumulated throughput per active PFC for GPRS, UL and QoS class THP3 PFCs.

Data Source

BSC_IOG20_APG40

Source Field

ULTHP3GTHR

Source Section

CELLQOSG

USEDDLRBLKS

Number of occupied radio blocks DL

Data Source

BSC_IOG20_APG40

Source Field

USEDDLRBLKS

Source Section

CELLGPRS3

USEDULRBLKS

Number of occupied (scheduled) radio blocks UL.

Data Source

BSC_IOG20_APG40

Source Field

USEDULRBLKS

Source Section

CELLGPRS3

VOL10STRACC

The accumulated DL TBF data volume over one measurement period in the GBR interval 10-19.

Data Source

BSC_IOG20_APG40

Source Field

VOL10STRACC

Source Section

CELLQOSS

VOL120STRACC

The accumulated DL TBF data volume over one measurement period in the GBR interval 120-159.

Data Source

BSC_IOG20_APG40

Source Field

VOL120STRACC

Source Section

CELLQOSS

VOL160STRACC

The accumulated DL TBF data volume over one measurement period in the GBR interval 160 and over.

Data Source

BSC_IOG20_APG40

Source Field

VOL160STRACC

Source Section

CELLQOSS

VOL20STRACC

The accumulated DL TBF data volume over one measurement period in the GBR interval 20-29.

Data Source

BSC_IOG20_APG40

Source Field

VOL20STRACC

Source Section

CELLQOSS

VOL30STRACC

The accumulated DL TBF data volume over one measurement period in the GBR interval 30-39.

Data Source

BSC_IOG20_APG40

Source Field

VOL30STRACC

Source Section

CELLQOSS

VOL40STRACC

The accumulated DL TBF data volume over one measurement period in the GBR interval 40-59.

Data Source

BSC_IOG20_APG40

Source Field

VOL40STRACC

Source Section

CELLQOSS

VOL60STRACC

The accumulated DL TBF data volume over one measurement period in the GBR interval 60-79.

Data Source

BSC_IOG20_APG40

Source Field

VOL60STRACC

Source Section

CELLQOSS

VOL80STRACC

The accumulated DL TBF data volume over one measurement period in the GBR interval 80-199.

Data Source

BSC_IOG20_APG40

Source Field

VOL80STRACC

Source Section

CELLQOSS

VOLULSTRACC

The accumulated UL TBF volume over one measurement period.

Data Source

BSC_IOG20_APG40

Source Field

VOLULSTRACC

Source Section

CELLQOSS

WTHR10STRACC

The DL TBF weighted throughput over one measurement period in the GBR interval 10-19.

Data Source

BSC_IOG20_APG40

Source Field

WTHR10STRACC

Source Section

CELLQOSS

WTHR120STRACC

The DL TBF weighted throughput over one measurement period in the GBR interval 120-159.

Data Source

BSC_IOG20_APG40

Source Field

WTHR120STRACC

Source Section

CELLQOSS

WTHR160STRACC

The DL TBF weighted throughput over one measurement period in the GBR interval 160 and over.

Data Source

BSC_IOG20_APG40

Source Field

WTHR160STRACC

Source Section

CELLQOSS

WTHR20STRACC

The DL TBF weighted throughput over one measurement period in the GBR interval 20-29.

Data Source

BSC_IOG20_APG40

Source Field

WTHR20STRACC

Source Section

CELLQOSS

WTHR30STRACC

The DL TBF weighted throughput over one measurement period in the GBR interval 30-39.

Data Source

BSC_IOG20_APG40

Source Field

WTHR30STRACC

Source Section

CELLQOSS

WTHR40STRACC

The DL TBF weighted throughput over one measurement period in the GBR interval 40-59.

Data Source

BSC_IOG20_APG40

Source Field

WTHR40STRACC

Source Section

CELLQOSS

WTHR60STRACC

The DL TBF weighted throughput over one measurement period in the GBR interval 60-79.

Data Source

BSC_IOG20_APG40

Source Field

WTHR60STRACC

Source Section

CELLQOSS

WTHR80STRACC

The DL TBF weighted throughput over one measurement period in the GBR interval 80-199.

Data Source

BSC_IOG20_APG40

Source Field

WTHR80STRACC

Source Section

CELLQOSS

Cellset Primitive Calculations

The following is a list of primitive calculations for the Cellset entity.

GRAPHmultiLineSeparator

Special Control Field for Multi-Line Graphs

Calculation

```
""
```

MRR_RELEASE

Release

Calculation

NUMDAYS

of days in Report

Calculation

```
DAYSINREPORT()
```

NUMHOURS

of hours in Summation Data

Calculation

Cellset Peg Counts

The following is a list of peg counts for the Cellset entity.

Cell_Set_Name

Cell Set Name

Data Source

Cell Set Name

Creator

Creator

Data Source

Creator

Day_setting

Day setting example MoTuWeThFrSaSu

Data Source

Day setting

No_of_Cells

No of Cells

Data Source

No of Cells

Period__1

Period #1

Data Source

Period #1

Period__2

Period #2

Data Source

Period #2

Period__3

Period #3

Data Source

Period #3

Period__4

Period #4

Data Source

Period #4

Result_Name

Result Name

Data Source

Result Name

Result_Status

Result Status

Data Source

Result Status

Start_Time

Start Time

Data Source

Start Time

Stop_Time

Stop Time

Data Source

Stop Time

Threshold

Threshold

Data Source

Threshold

DataService_MSC Primitive Calculations

The following is a list of primitive calculations for the DataService_MSC entity.

GRAPHmultiLineSeparator

Special Control Field for Multi-Line Graphs

Calculation

```
""
```

NUMDAYS

of days in Report

Calculation

```
DAYSINREPORT()
```

NUMHOURS

of hours in Summation Data

Calculation

DataService_MSC Peg Counts

The following is a list of peg counts for the DataService_MSC entity.

NDATATOT

Nr of req for data services id through called party Nr prefix analysis at call

Destination Primitive Calculations

The following is a list of primitive calculations for the Destination entity.

GRAPHmultiLineSeparator

Special Control Field for Multi-Line Graphs

Calculation

```
""
```

INTERVALS

Number of 60 minute intervals covered

Calculation

```
PERLEN / (1.0 * 60)
```

LocalName

Destination Name

Calculation

```
LocalKey
```

NUMDAYS

of days in Report

Calculation

```
DAYSINREPORT()
```

NUMHOURS

of hours in Summation Data

Calculation

VENDORTECH

Vendor Technology

Calculation

```
isNull( PERLEN ) ? nullString() : "EricssonGSM"
```

Destination Peg Counts

The following is a list of peg counts for the Destination entity.

BANS_TRART

Number of calls that resulted in B-answer

Data Source

MSC_TRART

Source Field

BANS

Source Section

ASC_TRART

MSC_RELEASE

Release

NANSW_MBASTRAFTY

Number of calls with B-answer

Data Source

MSC_IOG20_APG40

Source Field

NANSW

Source Section

MBASTRAFTY

NCALLS_MBASTRAFTY

Number of calls

Data Source

MSC_IOG20_APG40

Source Field

NCALLS

Source Section

MBASTRAFTY

NCALLS_SSF

Number of calls to or from integrated Service Switching Function

Data Source

MSC_TRART

Source Field

NCALLS

Source Section

ASC_TRART

NCALLS_TRART

Number of attempted calls (bids)

Data Source

MSC_TRART

Source Field

NCALLS

Source Section

ASC_TRART

NCALLSDB

Number of calls to data base

Data Source

MSC_TRART

Source Field

NCALLSDB

Source Section

ASC_TRART

NCALLSEXTCONG

Count of congestion in last choice trunk group

Data Source

MSC_TRART

Source Field

NCALLSEXTCONG

Source Section

ASC_TRART

NCALLSINTCONG

Count of congestion in switching network and junctor groups

Data Source

MSC_TRART

Source Field

NCALLSINTCONG

Source Section

ASC_TRART

NCALLSSUCCEOS

Number of calls with successful End-of-selection

Data Source

MSC_TRART

Source Field

NCALLSSUCCEOS

Source Section

ASC_TRART

NCALLSUNSUCC

Count of congestion in auxiliary groups,common control groups,SUS functions,intelligent network and calls lost to technical faults in the exchange

Data Source

MSC_TRART

Source Field

NCALLSUNSUCC

Source Section

ASC_TRART

NECONG_MBASTRAFTY

Number of calls rejected due to external congestion

Data Source

MSC_IOG20_APG40

Source Field

NECONG

Source Section

MBASTRAFTY

NICONG_MBASTRAFTY

Number of calls rejected due to internal congestion

Data Source

MSC_IOG20_APG40

Source Field

NICONG

Source Section

MBASTRAFTY

NSCAN_MBASTRAFTY

Number of accumulations.

Data Source

MSC_IOG20_APG40

Source Field

NSCAN

Source Section

MBASTRAFTY

NSUEOS_MBASTRAFTY

Number of successful end of selections

Data Source

MSC_IOG20_APG40

Source Field

NSUEOS

Source Section

MBASTRAFTY

NTRALACC_MBASTRAFTY

Traffic Level Acuumulator, Number of ongoing through connected calls

Data Source

MSC_IOG20_APG40

Source Field

NTRALACC

Source Section

MBASTRAFTY

NUNSUCC_MBASTRAFTY

Number of unsuccessful calls

Data Source

MSC_IOG20_APG40

Source Field

NUNSUCC

Source Section

MBASTRAFTY

PERLEN

Period Length

TRAFLVLCNTR

Accumulated value of traffic flow per origin and destination

Data Source

MSC_TRART

Source Field

TRAFLVLCNTR

Source Section

ASC_TRART

TRAL_MBASTRAFTY

Traffic Level, Number of ongoing through connected calls

Data Source

MSC_IOG20_APG40

Source Field

TRAL

Source Section

MBASTRAFTY

DestinationCode Primitive Calculations

The following is a list of primitive calculations for the DestinationCode entity.

GRAPHmultiLineSeparator

Special Control Field for Multi-Line Graphs

Calculation

```
""
```

INTERVALS

Number of 60 minute intervals covered

Calculation

```
PERLEN / (1.0 * 60)
```

NUMDAYS

of days in Report

Calculation

```
DAYSINREPORT()
```

NUMHOURS

of hours in Summation Data

Calculation

VENDORTECH

Vendor Technology

Calculation

```
isNull( PERLEN ) ? nullString() : "EricssonGSM"
```

DestinationCode Peg Counts

The following is a list of peg counts for the DestinationCode entity.

MSC_RELEASE

Release

NANSW

Number of B-answers

Data Source

MSC_IOG20_APG40

Source Field

NANSW

Source Section

TRAFFDEST

NCALLS

Number of seizure attempts towards the destination

Data Source

MSC_IOG20_APG40

Source Field

NCALLS

Source Section

TRAFFDEST

NOUTGSCNT

Number of calls towards a traffic destination seizing an outgoing individual

Data Source

MSC_IOG20_APG40

Source Field

NOUTGSCNT

Source Section

TRAFFDEST1

NTDBLO

Number of calls that have been rejected due to the network management function Traffic Destination Blocking

Data Source

MSC_IOG20_APG40

Source Field

NTDBLO

Source Section

TRAFFDEST

NUNSUCC

Number of failed calls towards a traffic destination code caused by congestion when seizing an outgoing individual

Data Source

MSC_IOG20_APG40

Source Field

NUNSUCC

Source Section

TRAFFDEST

PERLEN

Period Length

TRAL

Number of ongoing calls (traffic level)

Data Source

MSC_IOG20_APG40

Source Field

TRAL

Source Section

TRAFFDEST

DigitalPath_MSC Primitive Calculations

The following is a list of primitive calculations for the DigitalPath_MSC entity.

GRAPHmultiLineSeparator

Special Control Field for Multi-Line Graphs

Calculation

```
""
```

NUMDAYS

of days in Report

Calculation

```
DAYSINREPORT()
```

NUMHOURS

of hours in Summation Data

Calculation

DigitalPath_MSC Peg Counts

The following is a list of peg counts for the DigitalPath_MSC entity.

BFF

Bit faults frequency

CSLE

Number of seconds with controlled slips

CSLER

Number of seconds with controlled slips

DF

Number of disturbances

ES

Number of errored seconds

ESR

Number of errored seconds remote end

FSBE

Number of frame synchronization bit error events

FSBER

Number of frame synchronization bit error events

G1

Number of CRC error events of type G1

G1R

Number of CRC error events of type G1

G2

Number of CRC error events of type G2

G2R

Number of CRC error events of type G2

G3

Number of CRC error events of type G3

G3R

Number of CRC error events of type G3

G4

Number of CRC error events of type G4

G4R

Number of CRC error events of type G4

G5

Number of CRC error events of type G5

G5R

Number of CRC error events of type G5

G6

Number of CRC error events of type G6

G6R

Number of CRC error events of type G6

LCVE

Number of line code violation events

LCVER

Number of line code violation events

SEFE

Number of severely errored framing events

SEFER

Number of severely errored framing events

SES

Number of severely errored seconds

SESR

Number of severely errored seconds remote end

SF

Number of slips

SMI

Nr of suspect-marked 15-minute intervals UASB and SMI are used in 32-ch PCM sys

UAS

Number of unavailable seconds

UASB

Number of unavailable seconds bi-directional, unavailable time

UASR

Number of unavailable seconds remote end

UAV

Number of unavailability events

DigPathType_BSC Primitive Calculations

The following is a list of primitive calculations for the DigPathType_BSC entity.

GRAPHmultiLineSeparator

Special Control Field for Multi-Line Graphs

Calculation

```
""
```

NUMDAYS

of days in Report

Calculation

```
DAYSINREPORT()
```

Updated: 2009-07-22

NUMHOURS

of hours in Summation Data

Calculation

DigPathType_BSC Peg Counts

The following is a list of peg counts for the DigPathType_BSC entity.

BLOHP

Number of blockings made by higher order path supervision

Data Source

BSC_IOG20_APG40

Source Field

BLOHP

Source Section

DIGPATH

BLOLP

Number of blockings made by lower order path supervision

Data Source

BSC_IOG20_APG40

Source Field

BLOLP

Source Section

DIGPATH

NBLOC

Number of blockings made by the digital path supervision

Data Source

BSC_IOG20_APG40

Source Field

NBLOC

Source Section

DIGPATH

NBLOMS

Number of blockings made by the multiplex section supervision

Data Source

BSC_IOG20_APG40

Source Field

NBLOMS

Source Section

DIGPATH

NBLOSDIP

Number of blockings made by the synchronous digital path supervision

Data Source

BSC_IOG20_APG40

Source Field

NBLOSDIP

Source Section

DIGPATH

NCONHP

Number of connected higher order path objects (VC-4)

Data Source

BSC_IOG20_APG40

Source Field

NCONHP

Source Section

DIGPATH

NCONLP

Number of connected lower order path objects (VC-12)

Data Source

BSC_IOG20_APG40

Source Field

NCONLP

Source Section

DIGPATH

NCONMS

Number of connected multiplex sections (number of connected MSs for each SDIP type)

Data Source

BSC_IOG20_APG40

Source Field

NCONMS

Source Section

DIGPATH

NCONSDIP

Number of connected synchronous digital paths

Data Source

BSC_IOG20_APG40

Source Field

NCONSDIP

Source Section

DIGPATH

NDIPST

Number of connected digital paths

Data Source

BSC_IOG20_APG40

Source Field

NDIPST

Source Section

DIGPATH

NPC

Number of performed network protection switching events

Data Source

BSC_IOG20_APG40

Source Field

NPC

Source Section

DIGPATH

PERLEN

Period Length

DigPathType_MSC Primitive Calculations

The following is a list of primitive calculations for the DigPathType_MSC entity.

GRAPHmultiLineSeparator

Special Control Field for Multi-Line Graphs

Calculation

""

NUMDAYS

of days in Report

Calculation

```
DAYSINREPORT()
```

NUMHOURS

of hours in Summation Data

Calculation

DigPathType_MSC Peg Counts

The following is a list of peg counts for the DigPathType_MSC entity.

NBLOC

Number of blockings made by digital path supervision

NDIPST

Number of connected digital paths

DirTrunk Primitive Calculations

The following is a list of primitive calculations for the DirTrunk entity.

GRAPHmultiLineSeparator

Special Control Field for Multi-Line Graphs

Calculation

```
""
```

INTERVALS

Number of 60 minute intervals covered

Calculation

```
PERLEN / (1.0 * 60)
```

NANSWERSI_PC

Number of seizures that leads to a B-answer on the incoming trunks

Calculation

```
protect(decode(TRK_TYPE,"INC",NANSWERSI,nullFloat()))
```

NANSWERSO_PC

Number of seizures that leads to a B-answer on the Outgoing trunks

Calculation

```
protect(decode(TRK_TYPE,"OUT",NANSWERSO,nullFloat()))
```

NCALLSI_PC

Number of detected seizures by the incoming route

Calculation

```
protect(decode(TRK_TYPE,"INC",NCALLSI,nullFloat()))
```

NCALLSO_PC

Number of detected seizures by the outgoing route

Calculation

```
protect(decode(TRK_TYPE,"OUT",NCALLSO,nullFloat()))
```

NISUPATPI_PC

Number of ATP received (incoming route and affiliated outgoing route)

Calculation

```
protect(decode(TRK_TYPE,"INC",NISUPATPI,nullFloat()))
```

NISUPATPO_PC

Number of ATP received (outgoing route and affiliated incoming route)

Calculation

```
protect(decode(TRK_TYPE,"OUT",NISUPATPO,nullFloat()))
```

NOVERFLOWI_PC

Number of calls with congestion (incoming route)

Calculation

```
protect(decode(TRK_TYPE,"INC",NOVERFLOWI,nullFloat()))
```

NOVERFLOWO_PC

Number of calls with congestion (Outgoing route)

Calculation

```
protect(decode(TRK_TYPE,"OUT",NOVERFLOWO,nullFloat()))
```

NRESTRICTI_PC

Number of incoming calls rejected

Calculation

```
protect(decode(TRK_TYPE,"INC",NRESTRICTI,nullFloat()))
```

NRESTRICTO_PC

outgoing calls rejected for the route due to the function Restriction of accessible outgoing circuits

Calculation

```
protect(decode(TRK_TYPE,"OUT",NRESTRICTO,nullFloat()))
```

NSEMIPERCI_PC

Number of semiperminant connection (incoming)

Calculation

```
protect(decode(TRK_TYPE,"INC",NSEMIPERCI,nullFloat()))
```

NSEMIPERCO_PC

Number of semiperminant connection (outgoing)

Calculation

```
protect(decode(TRK_TYPE,"OUT",NSEMIPERCO,nullFloat()))
```

NTRALACCI_TRUNKROUTE_PC

Accumulated traffic level (incoming route)

Calculation

```
protect(decode(TRK_TYPE,"INC",NTRALACCI_TRUNKROUTE,nullFloat()))
```

NTRALACCO_TRUNKROUTE_PC

Accumulated traffic level (outgoing route)

Calculation

```
protect(decode(TRK_TYPE,"OUT",NTRALACCO_TRUNKROUTE,nullFloat()))
```

NUMDAYS

of days in Report

Calculation

```
DAYSINREPORT()
```

NUMHOURS

of hours in Summation Data

Calculation

TRALI_TRUNKROUTE_PC

Indicates at each moment the number of seized individuals by the incoming route

Calculation

```
protect(decode(TRK_TYPE,"INC",TRALI_TRUNKROUTE,nullFloat()))
```

TRALO_TRUNKROUTE_PC

Indicates at each moment the number of seized individuals by the outgoing route

Calculation

```
protect(decode(TRK_TYPE,"OUT",TRALO_TRUNKROUTE,nullFloat()))
```

VENDORTECH

Vendor Technology

Calculation

```
isNull( PERLEN ) ? nullString() : "EricssonGSM"
```

DirTrunk Peg Counts

The following is a list of peg counts for the DirTrunk entity.

BBLOL

Number of Type B-Blocked Devices

Data Source

MSC_IOG20_APG40

Source Field

BBLOL

Source Section

TRUNKROUTE

BLOL_TRUNKROUTE

blocked individuals in the route Individuals in state BLOC, LIBL or SEAL; BLOL=MBLOL+ABLOL+OBLOL

Data Source

MSC_IOG20_APG40

Source Field

BLOL

Source Section

TRUNKROUTE

ID1_TRUNKROUTE

Global route number (I)

Data Source

MSC_IOG20_APG40

Source Field

ID1

Source Section

TRUNKROUTE

ID2_TRUNKROUTE

Global route number (O)

Data Source

MSC_IOG20_APG40

Source Field

ID2

Source Section

TRUNKROUTE

LASTCONGCNT

Number of congestions on the last available route, outgoing route

Data Source

MSC_IOG20_APG40

Source Field

LASTCONGCNT

Source Section

TRUNKROUTE

MSC_RELEASE

Release

NANSWERSI

Number of seizures that leads to a B-answer on the incoming route

Data Source

MSC_IOG20_APG40

Source Field

NANSWERSI

Source Section

TRUNKROUTE

NANSWERSO

Number of seizures that leads to a B-answer on the outgoing route

Data Source

MSC_IOG20_APG40

Source Field

NANSWERSO

Source Section

TRUNKROUTE

NBBLOCACC

Accumulated number of type B-blocked devices

Data Source

MSC_IOG20_APG40

Source Field

NBBLOCACC

Source Section

TRUNKROUTE

NBLOCACC_TRUNKROUTE

Accumulated number of blocked devices

Data Source

MSC_IOG20_APG40

Source Field

NBLOCACC

Source Section

TRUNKROUTE

NC7DSEIZ

Number of simultaneous calls

Data Source

MSC_IOG20_APG40

Source Field

NC7DSEIZ

Source Section

TRUNKROUTE

NCALLSI

Number of detected seizures by the incoming route

Data Source

MSC_IOG20_APG40

Source Field

NCALLSI

Source Section

TRUNKROUTE

NCALLSO

Number of seizure attempts by the outgoing route

Data Source

MSC_IOG20_APG40

Source Field

NCALLSO

Source Section

TRUNKROUTE

NCONGBAS

Number of congestions due to no resources available in Bearer Access

Data Source

MSC_IOG20_APG40

Source Field

NCONGBAS

Source Section

TRUNKROUT2

NCONGTRANS

Nr of congestions due to no transmission resources available in Bearer Access

Data Source

MSC_IOG20_APG40

Source Field

NCONGTRANS

Source Section

TRUNKROUT2

NDEV_TRUNKROUTE

Number of individuals in service on the route

Data Source

MSC_IOG20_APG40

Source Field

NDEV

Source Section

TRUNKROUTE

NDSEIZ

Number of simultaneous seizures of devices on bothway route

Data Source

MSC_IOG20_APG40

Source Field

NDSEIZ

Source Section

TRUNKROUTE

NISUPATPI

Number of ATP received (incoming route and affiliated outgoing route)

Data Source

MSC_IOG20_APG40

Source Field

NISUPATPI

Source Section

TRUNKROUTE

NISUPATPO

Number of ATP received (outgoing route and affiliated incoming route)

Data Source

MSC_IOG20_APG40

Source Field

NISUPATPO

Source Section

TRUNKROUTE

NOSEIZ_TRUNKROUTE

Number of outgoing seizures

Data Source

MSC_IOG20_APG40

Source Field

NOSEIZ

Source Section

TRUNKROUTE

NOVERFLOWI

Number of calls with congestion (incoming route)

Data Source

MSC_IOG20_APG40

Source Field

NOVERFLOWI

Source Section

TRUNKROUTE

NOVERFLOWO

Number of congested call attempts

Data Source

MSC_IOG20_APG40

Source Field

NOVERFLOWO

Source Section

TRUNKROUTE

NRESTRICTI

Number of incoming calls rejected

Data Source

MSC_IOG20_APG40

Source Field

NRESTRICTI

Source Section

TRUNKROUTE

NRESTRICTO

outgoing calls rejected for the route due to the function Restriction of accessible outgoing circuits

Data Source

MSC_IOG20_APG40

Source Field

NRESTRICTO

Source Section

TRUNKROUTE

NSCAN_TRUNKROUTE

Number of accumulations (scannings)

Data Source

MSC_IOG20_APG40

Source Field

NSCAN

Source Section

TRUNKROUTE

NSEMIPERCI

Number of semiperminant connection (incoming)

Data Source

MSC_IOG20_APG40

Source Field

NSEMIPERCI

Source Section

TRUNKROUTE

NSEMIPERCO

Number of semiperminant connection (outgoing)

Data Source

MSC_IOG20_APG40

Source Field

NSEMIPERCO

Source Section

TRUNKROUTE

NTRALACCI_TRUNKROUTE

Accumulated traffic level (incoming route)

Data Source

MSC_IOG20_APG40

Source Field

NTRALACCI

Source Section

TRUNKROUTE

NTRALACCO_TRUNKROUTE

Accumulated traffic level (outgoing route)

Data Source

MSC_IOG20_APG40

Source Field

NTRALACCO

Source Section

TRUNKROUTE

PERLEN

Period Length

RESTRDEVCNT

Number of restricted devices (outgoing route)

Data Source

MSC_IOG20_APG40

Source Field

RESTRDEVCNT

Source Section

TRUNKROUTE

THROUGHRTECNT

Number of through connections to an idle B-subscriber on a route basis, outgoing route

Data Source

MSC_IOG20_APG40

Source Field

THROUGHRTECNT

Source Section

TRUNKROUTE

TRALI_TRUNKROUTE

Indicates at each moment the number of seized individuals by the incoming route.

Data Source

MSC_IOG20_APG40

Source Field

TRALI

Source Section

TRUNKROUTE

TRALO_TRUNKROUTE

Indicates at each moment the number of seized individuals by the outgoing route.

Data Source

MSC_IOG20_APG40

Source Field

TRALO

Source Section

TRUNKROUTE

TRK_TYPE

Trunk Type

Data Source

MSC_IOG20_APG40

Source Field

TRK

Source Section

TRUNKROUTE

Distrib_Group_Switch Primitive Calculations

The following is a list of primitive calculations for the Distrib_Group_Switch entity.

GRAPHmultiLineSeparator

Special Control Field for Multi-Line Graphs

Calculation

```
""
```

LocalName

Distrib_Group_Switch ID

Calculation

```
LocalKey
```

NUMDAYS

of days in Report

Calculation

```
DAYSINREPORT()
```

NUMHOURS

of hours in Summation Data

Calculation

Distrib_Group_Switch Peg Counts

The following is a list of peg counts for the Distrib_Group_Switch entity.

ACCPLA

Number of accumulated blocked DIGS units in plane A

Data Source

BSC_IOG20_APG40

Source Field

ACCPLA

Source Section

DIGS

ACCPLB

Number of accumulated blocked DIGS units in plane B

Data Source

BSC_IOG20_APG40

Source Field

ACCPLB

Source Section

DIGS

ACCUNIT

Number of accumulated blocked DIGS units

Data Source

BSC_IOG20_APG40

Source Field

ACCUNIT

Source Section

DIGS

BLKPLA

Number of blocked DIGS unitsin plane A

Data Source

BSC_IOG20_APG40

Source Field

BLKPLA

Source Section

DIGS

BLKPLB

Number of blocked DIGS unitsin plane B

Data Source

BSC_IOG20_APG40

Source Field

BLKPLB

Source Section

DIGS

BLKUNIT

Number of blocked DIGS units

Data Source

BSC_IOG20_APG40

Source Field

BLKUNIT

Source Section

DIGS

NSCAN

Number of accumulations

Data Source

BSC_IOG20_APG40

Source Field

NSCAN

Source Section

DIGS

NUNIT

Number of connected DIGS units

Data Source

BSC_IOG20_APG40

Source Field

NUNIT

Source Section

DIGS

PERLEN

Period Length

DTISC Primitive Calculations

The following is a list of primitive calculations for the DTISC entity.

GRAPHmultiLineSeparator

Special Control Field for Multi-Line Graphs

Calculation

```
""
```

INTERVALS

Number of 60 minute intervals covered

Calculation

```
PERLEN / (1.0 * 60)
```

NUMDAYS

of days in Report

Calculation

```
DAYSINREPORT()
```

NUMHOURS

of hours in Summation Data

Calculation

VENDORTECH

Vendor Technology

Calculation

```
isNull( PERLEN ) ? nullString() : "EricssonGSM"
```

DTISC Peg Counts

The following is a list of peg counts for the DTISC entity.

MSC_RELEASE

Release

NDTICMMFLT

Number of CMM requests from a DTI or DTI2 not performed successfully

Data Source

MSC_IOG20_APG40

Source Field

NDTICMMFLT

Source Section

DTISTAT

NDTICMMTOT

Number of CMM requests from a DTI or DTI2

Data Source

MSC_IOG20_APG40

Source Field

NDTICMMTOT

Source Section

DTISTAT

NDTICNGTOT

Number of data service call attempts which fail because of congestion in all priority routes, with a DTI or DTI2 connected to the highest priority route

Data Source

MSC_IOG20_APG40

Source Field

NDTICNGTOT

Source Section

DTISTAT

NDTIDDDCTOT

Number of requests sent to a DTI or DTI2 to prepare Direct Digital Data (DDD) calls

Data Source

MSC_IOG20_APG40

Source Field

NDTIDDDCTOT

Source Section

DTISTAT

NDTIESTFLT

Number of timeouts from a DTI or DTI2 responding to requests to establish traffic channel synchronization for data service calls

Data Source

MSC_IOG20_APG40

Source Field

NDTIESTFLT

Source Section

DTISTAT

NDTIESTTOT

Number of requests sent to a DTI or DTI2 to establish traffic channel synchronization for data service calls

Data Source

MSC_IOG20_APG40

Source Field

NDTIESTTOT

Source Section

DTISTAT

NDTIICMCANTOT

Number of requests sent to a DTI or DTI2 to cancel prepared ICMs

Data Source

MSC_IOG20_APG40

Source Field

NDTIICMCANTOT

Source Section

DTISTAT

NDTIICMCPLFLT

Number of ICMs which a DTI or DTI2 prepared but did not complete successfully

Data Source

MSC_IOG20_APG40

Source Field

NDTIICMCPLFLT

Source Section

DTISTAT

NDTIICMCPLTOT

Number of requests sent to a DTI or DTI2 to complete prepared ICMs

Data Source

MSC_IOG20_APG40

Source Field

NDTIICMCPLTOT

Source Section

DTISTAT

NDTIICMFLT

Number of timeouts from a DTI or DTI2 responding to requests to prepare data services for ICM

Data Source

MSC_IOG20_APG40

Source Field

NDTIICMFLT

Source Section

DTISTAT

NDTIICMTOT

Number of requests to a DTI or DTI2 to prepare data services for ICM

Data Source

MSC_IOG20_APG40

Source Field

NDTIICMTOT

Source Section

DTISTAT

NDTIPREPFLT

Number of timeouts from a DTI or DTI2 responding to requests to prepare data service calls

Data Source

MSC_IOG20_APG40

Source Field

NDTIPREPFLT

Source Section

DTISTAT

NDTIPREPTOT

Number of requests sent to a DTI or DTI2 to prepare data service calls

Data Source

MSC_IOG20_APG40

Source Field

NDTIPREPTOT

Source Section

DTISTAT

NDTIRELTOT

Number of requests from a DTI or DTI2 to release data service calls

Data Source

MSC_IOG20_APG40

Source Field

NDTIRELTOT

Source Section

DTISTAT

NIWUANMFLT

Number of timeouts from a GIWU responding to requests to establish traffic channel synchronization for data service calls

Data Source

MSC_IOG20_APG40

Source Field

NIWUANMFLT

Source Section

GIWUSTAT

NIWUANMTOT

Number of requests sent to a GIWU to establish traffic channel synchronization for data service calls

Data Source

MSC_IOG20_APG40

Source Field

NIWUANMTOT

Source Section

GIWUSTAT

NIWUCMMFLT

Number of CMM requests from a GIWU not performed successfully

Data Source

MSC_IOG20_APG40

Source Field

NIWUCMMFLT

Source Section

GIWUSTAT

NIWUCMMTOT

Number of CMM requests from a GIWU

Data Source

MSC_IOG20_APG40

Source Field

NIWUCMMTOT

Source Section

GIWUSTAT

NIWUCNGTOT

Number of data service call attempts which fail because of congestion in all priority routes, with a GIWU connected to the highest priority route

Data Source

MSC_IOG20_APG40

Source Field

NIWUCNGTOT

Source Section

GIWUSTAT

NIWUICMCANTOT

Number of requests sent to a GIWU to cancel prepared ICMs

Data Source

MSC_IOG20_APG40

Source Field

NIWUICMCANTOT

Source Section

GIWUSTAT

NIWUICMCPLFLT

Number of ICMs which a GIWU prepared but did not complete successfully

Data Source

MSC_IOG20_APG40

Source Field

NIWUICMCPLFLT

Source Section

GIWUSTAT

NIWUICMCPLTOT

Number of requests sent to a GIWU to complete prepared ICMs

Data Source

MSC_IOG20_APG40

Source Field

NIWUICMCPLTOT

Source Section

GIWUSTAT

NIWUICMFLT

Number of timeouts from a GIWU responding to requests to prepare data services for ICM

Data Source

MSC_IOG20_APG40

Source Field

NIWUICMFLT

Source Section

GIWUSTAT

NIWUICMTOT

Number of requests to a GIWU to prepare data services for In-Call Modification (ICM)

Data Source

MSC_IOG20_APG40

Source Field

NIWUICMTOT

Source Section

GIWUSTAT

NIWUIWRFLT

Number of timeouts from a GIWU responding to requests to prepare data service calls

Data Source

MSC_IOG20_APG40

Source Field

NIWUIWRFLT

Source Section

GIWUSTAT

NIWUIWRTOT

Number of requests sent to a GIWU to prepare data service calls

Data Source

MSC_IOG20_APG40

Source Field

NIWUIWRTOT

Source Section

GIWUSTAT

NIWURELTOT

Number of requests from a GIWU to release data service calls

Data Source

MSC_IOG20_APG40

Source Field

NIWURELTOT

Source Section

GIWUSTAT

PERLEN

Period Length

ECPool Primitive Calculations

The following is a list of primitive calculations for the ECPool entity.

GRAPHmultiLineSeparator

Special Control Field for Multi-Line Graphs

Calculation

```
""
```

INTERVALS

Number of 60 minute intervals covered

Calculation

```
PERLEN / (1.0 * 60)
```

NUMDAYS

of days in Report

Calculation

```
DAYSINREPORT()
```

NUMHOURS

of hours in Summation Data

Calculation

VENDORTECH

Vendor Technology

Calculation

```
isNull( PERLEN ) ? nullString() : "EricssonGSM"
```

ECPool Peg Counts

The following is a list of peg counts for the ECPool entity.

ABLOCCNT

Number of automatically-blocked ECDH devices

Data Source

MSC_IOG20_APG40

Source Field

ABLOCCNT

Source Section

ECPOOL

BLOCCNT

Blocking counter

Data Source

MSC_IOG20_APG40

Source Field

BLOCCNT

Source Section

ECPOOL

CALLCNT

Call counter

Data Source

MSC_IOG20_APG40

Source Field

CALLCNT

Source Section

ECPOOL

CONGCNT

Congestion counter

Data Source

MSC_IOG20_APG40

Source Field

CONGCNT

Source Section

ECPOOL

MBLOCCNT

Number of manually-blocked ECDH devices

Data Source

MSC_IOG20_APG40

Source Field

MBLOCCNT

Source Section

ECPOOL

MSC_RELEASE

Release

NUDEVCNT

Number of devices in service counter

Data Source

MSC_IOG20_APG40

Source Field

NUDEVCNT

Source Section

ECPOOL

OBLOCCNT

Number of 'other' type of blocking for ECDH devices

Data Source

MSC_IOG20_APG40

Source Field

OBLOCCNT

Source Section

ECPOOL

PERLEN

Period Length

POOL_ID

ID

Data Source

MSC_IOG20_APG40

Source Field

POOL

Source Section

ECPOOL

TOTDEVCNT

Total devices counter

Data Source

MSC_IOG20_APG40

Source Field

TOTDEVCNT

Source Section

ECPOOL

TRALCNT

Traffic level counter

Data Source

MSC_IOG20_APG40

Source Field

TRALCNT

Source Section

ECPOOL

EM Primitive Calculations

The following is a list of primitive calculations for the EM entity.

GRAPHmultiLineSeparator

Special Control Field for Multi-Line Graphs

Calculation

```
""
```

INTERVALS

Number of 60 minute intervals covered

Calculation

```
PERLEN / (1.0 * 60)
```

LocalName

EM Name

Calculation

```
LocalKey
```

NUMDAYS

of days in Report

Calculation

```
DAYSINREPORT()
```

NUMHOURS

of hours in Summation Data

Calculation

VENDORTECH

Vendor Technology

Calculation

```
isNull( PERLEN ) ? nullString() : "EricssonGSM"
```

EM Peg Counts

The following is a list of peg counts for the EM entity.

BSS_RELEASE

Release

ID1_EM

RP ID

Data Source

BSC_IOG20_APG40

Source Field

ID1

Source Section

EMGPRS

PERLEN

Period Length

RPPLOAD

PCU-RP processor load for each RP

Data Source

BSC_IOG20_APG40

Source Field

RPPLOAD

Source Section

EMGPRS

EOSCode Primitive Calculations

The following is a list of primitive calculations for the EOSCode entity.

GRAPHmultiLineSeparator

Special Control Field for Multi-Line Graphs

Calculation

```
""
```

INTERVALS

Number of 60 minute intervals covered

Calculation

```
PERLEN / (1.0 * 60)
```

LocalName

EOSCode Name

Calculation

```
LocalKey
```

NUMDAYS

of days in Report

Calculation

```
DAYSINREPORT()
```

NUMHOURS

of hours in Summation Data

Calculation

VENDORTECH

Vendor Technology

Calculation

```
isNull( PERLEN ) ? nullString() : "EricssonGSM"
```

EOSCode Peg Counts

The following is a list of peg counts for the EOSCode entity.

MSC_RELEASE

Release

NEVERY

Number of occurred events during call setup

Data Source

MSC_IOG20_APG40

Source Field

NEVERY

Source Section

EOS

NLAST

calls release due to indicated event

Data Source

MSC_IOG20_APG40

Source Field

NLAST

Source Section

EOS

PERLEN

Period Length

Global_Titl_Trans_Typ Primitive Calculations

The following is a list of primitive calculations for the Global_Titl_Trans_Typ entity.

GRAPHmultiLineSeparator

Special Control Field for Multi-Line Graphs

Calculation

```
""
```

NUMDAYS

of days in Report

Calculation

```
DAYSINREPORT()
```

NUMHOURS

of hours in Summation Data

Calculation

Global_Titl_Trans_Typ Peg Counts

The following is a list of peg counts for the Global_Titl_Trans_Typ entity.

GTTPERFD

Number of GTTs performed.

Data Source

BSC_IOG20_APG40

Source Field

GTTPERFD

Source Section

SS7TT

GTTUN0NS

Number of GTTs unable to perform - Diagnostic 0: No translation for address of such nature.

Data Source

BSC_IOG20_APG40

Source Field

GTTUN0NS

Source Section

SS7TT

GTTUN1NT

Number of GTTs unable to perform- Diagnostic 1: No translation for this address.

Data Source

BSC_IOG20_APG40

Source Field

GTTUN1NT

Source Section

SS7TT

PERLEN

Period Length

Higher_Order_Path Primitive Calculations

The following is a list of primitive calculations for the Higher_Order_Path entity.

GRAPHmultiLineSeparator

Special Control Field for Multi-Line Graphs

Calculation

""

LocalName

Higher_Order_Path ID

Updated: 2009-07-22

Calculation

```
LocalKey
```

NUMDAYS

of days in Report

Calculation

```
DAYSINREPORT()
```

NUMHOURS

of hours in Summation Data

Calculation

Higher_Order_Path Peg Counts

The following is a list of peg counts for the Higher_Order_Path entity.

HPFBBE

Number of background block errors higher order path far end

Data Source

BSC_IOG20_APG40

Source Field

HPFBBE

Source Section

SDIPHP

HPFES

Number of errored seconds far end Higher order path

Data Source

BSC_IOG20_APG40

Source Field

HPFES

Source Section

SDIPHP

HPFSES

Number of severely errored seconds far end higher order path

Data Source

BSC_IOG20_APG40

Source Field

HPFSES

Source Section

SDIPHP

HPFUAS

Number of unavailable seconds far end higher order path

Data Source

BSC_IOG20_APG40

Source Field

HPFUAS

Source Section

SDIPHP

HPFUAV

Number of unavailable events far end higher order path

Data Source

BSC_IOG20_APG40

Source Field

HPFUAV

Source Section

SDIPHP

HPNBBE

Number of background block errors higher order path near end

Data Source

BSC_IOG20_APG40

Source Field

HPNBBE

Source Section

SDIPHP

HPNES

Number of errored seconds near end Higher order path

Data Source

BSC_IOG20_APG40

Source Field

HPNES

Source Section

SDIPHP

HPNSES

Number of severely errored seconds near end higher order path

Data Source

BSC_IOG20_APG40

Source Field

HPNSES

Source Section

SDIPHP

HPNUAS

Number of unavailable seconds near end higher order path

Data Source

BSC_IOG20_APG40

Source Field

HPNUAS

Source Section

SDIPHP

HPNUAV

Number of unavailable events near end higher order path

Data Source

BSC_IOG20_APG40

Source Field

HPNUAV

Source Section

SDIPHP

PERLEN

Period Length

SMI

Flag indicating if any suspect marked intervals occured during 24 h measurement period higher order path.

Data Source

BSC_IOG20_APG40

Source Field

SMI

Source Section

SDIPHP

HLRSubs Primitive Calculations

The following is a list of primitive calculations for the HLRSubs entity.

GRAPHmultiLineSeparator

Special Control Field for Multi-Line Graphs

Calculation

```
""
```

INTERVALS

Number of 60 minute intervals covered

Calculation

```
PERLEN / (1.0 * 60)
```

LocalName

HLRSubs Name

Calculation

```
LocalKey
```

NUMDAYS

of days in Report

Calculation

```
DAYSINREPORT()
```

NUMHOURS

of hours in Summation Data

Calculation

VENDORTECH

Vendor Technology

Calculation

```
isNull( PERLEN ) ? nullString() : "EricssonGSM"
```

Updated: 2009-07-22

HLRSubs Peg Counts

The following is a list of peg counts for the HLRSubs entity.

MSC_RELEASE

Release

NHLRMSST

Registered Mobile Subscribers in a Mobile Services Switching Centre (MSC)/VLR

Data Source

MSC_IOG20_APG40

Source Field

NHLRMSST

Source Section

HLRSTAT

NHLRREGAST

Registered Attached Mobile Subscribers in an MSC/VLR

Data Source

MSC_IOG20_APG40

Source Field

NHLRREGAST

Source Section

HLRSTAT

PERLEN

Period Length

ISDNESG Primitive Calculations

The following is a list of primitive calculations for the ISDNESG entity.

GRAPHmultiLineSeparator

Special Control Field for Multi-Line Graphs

Calculation

```
""
```

INTERVALS

Number of 60 minute intervals covered

Calculation

```
PERLEN / (1.0 * 60)
```

LocalName

ISDNESG Name

Calculation

```
LocalKey
```

NUMDAYS

of days in Report

Calculation

```
DAYSINREPORT()
```

NUMHOURS

of hours in Summation Data

Calculation

VENDORTECH

Vendor Technology

Calculation

```
isNull( PERLEN ) ? nullString() : "EricssonGSM"
```

ISDNESG Peg Counts

The following is a list of peg counts for the ISDNESG entity.

BSUBCNT

Blocked subscribers

Data Source

MSC_IOG20_APG40

Source Field

BSUBCNT

Source Section

ISDNESG

MSC_RELEASE

Release

NSCAN

Scannings

Data Source

MSC_IOG20_APG40

Source Field

NSCAN

Source Section

ISDNESG

OSEIZCNT

Originating seizure counter

Data Source

MSC_IOG20_APG40

Source Field

OSEIZCNT

Source Section

ISDNESG

OTRALCNT

Originating traffic level counter

Data Source

MSC_IOG20_APG40

Source Field

OTRALCNT

Source Section

ISDNESG

PERLEN

Period Length

SUBCNT

Subscribers

Data Source

MSC_IOG20_APG40

Source Field

SUBCNT

Source Section

ISDNESG

TANSCNT

Terminating answer counter

Data Source

MSC_IOG20_APG40

Source Field

TANSCNT

Source Section

ISDNESG

TBUSYCNT

Terminating busy counter

Data Source

MSC_IOG20_APG40

Source Field

TBUSYCNT

Source Section

ISDNESG

TCALLCNT

Terminating call attempt counter

Data Source

MSC_IOG20_APG40

Source Field

TCALLCNT

Source Section

ISDNESG

TNUMLCNT

Terminating number of active calls

Data Source

MSC_IOG20_APG40

Source Field

TNUMLCNT

Source Section

ISDNESG

TRSERCNT

Terminating rejected due to active service

Data Source

MSC_IOG20_APG40

Source Field

TRSERCNT

Source Section

ISDNESG

TSEIZCNT

Terminating seizure counter

Data Source

MSC_IOG20_APG40

Source Field

TSEIZCNT

Source Section

ISDNESG

TTRALCNT

Terminating traffic level counter

Data Source

MSC_IOG20_APG40

Source Field

TTRALCNT

Source Section

ISDNESG

TUCACNT

Terminating end user call attempts counter

Data Source

MSC_IOG20_APG40

Source Field

TUCACNT

Source Section

ISDNESG

TUSBUCNT

Terminating user busy counter

Data Source

MSC_IOG20_APG40

Source Field

TUSBUCNT

Source Section

ISDNESG

LA Primitive Calculations

The following is a list of primitive calculations for the LA entity.

GRAPHmultiLineSeparator

Special Control Field for Multi-Line Graphs

Calculation

```
""
```

INTERVALS

Number of 60 minute intervals covered

Calculation

```
PERLEN / (1.0 * 60)
```

NUMDAYS

of days in Report

Calculation

```
DAYSINREPORT()
```

NUMHOURS

of hours in Summation Data

Calculation

PL_SUCC%

Successful Page Reponse Percentage

Calculation

```
vsum(NLAPAG1RESUCC, NLAPAG2RESUCC) * 100.0 / vsum(NLAPAG1LOTOT,
NLAPAG2LOTOT)
```

PL_TOT_1

Total Number of Page Attempts (First and Repeated Pages)

Calculation

```
vsum(NLAPAG1LOTOT, NLAPAG2LOTOT)
```

VENDORTECH

Vendor Technology

Calculation

```
isNull( PERLEN ) ? nullString() : "EricssonGSM"
```

LA Peg Counts

The following is a list of peg counts for the LA entity.

MSC_RELEASE

Release

NLAL2IOTOT

Number of IMSI attached location updatings for already registered subscribers over Gs-interface.

Data Source

MSC_IOG20_APG40

Source Field

NLAL2IOTOT

Source Section

LOCAREAST

NLAL2NOSUCC

Number of successful normal location updatings for already registered subscribers over Gs-interface.

Data Source

MSC_IOG20_APG40

Source Field

NLAL2NOSUCC

Source Section

LOCAREAST

NLAL2OISUCC

Number of successful IMSI attached location updatings for already registered subscribers over Gs-interface.

Data Source

MSC_IOG20_APG40

Source Field

NLAL2OISUCC

Source Section

LOCAREAST

NLAL2ONTOT

Number of normal location updatings for already registered subscribers over Gs- interface.

Data Source

MSC_IOG20_APG40

Source Field

NLAL2ONTOT

Source Section

LOCAREAST

NLALIOSUCC

Number of successful IMSI attached location updatings for already registered subscribers over A and Iu-interface.

Data Source

MSC_IOG20_APG40

Source Field

NLALIOSUCC

Source Section

LOCAREAST

NLALIOTOT

Number of IMSI attached location updatings for already registered subscribers over A and Iu-interface.

Data Source

MSC_IOG20_APG40

Source Field

NLALIOTOT

Source Section

LOCAREAST

NLALNNSUCC

Number of successful normal location updatings for non-registered subscribers over A and Iu-interface.

Data Source

MSC_IOG20_APG40

Source Field

NLALNNSUCC

Source Section

LOCAREAST

NLALNNTOT

Number of normal location updatings for non-registered subscribers over A and Iu-interface.

Data Source

MSC_IOG20_APG40

Source Field

NLALNNTOT

Source Section

LOCAREAST

NLALNOSUCC

Number of successful normal location updatings for already registered subscribers over A and Iu-interface.

Data Source

MSC_IOG20_APG40

Source Field

NLALNOSUCC

Source Section

LOCAREAST

NLALNOTOT

Number of normal location updating attempts for already registered subscribers over A and Iu-interface.

Data Source

MSC_IOG20_APG40

Source Field

NLALNOTOT

Source Section

LOCAREAST

NLALOCPRRFLT

Number of location updating rejections due to Partial Roaming.

Data Source

MSC_IOG20_APG40

Source Field

NLALOCPRRFLT

Source Section

LOCAREAST

NLALOCSSRFLT

Number of location updating rejections due to the Cellular Service Separation (CSS) restriction

Data Source

MSC_IOG20_APG40

Source Field

NLALOCSSRFLT

Source Section

LOCAREAST

NLALOCSUCC

Successful Location Updatings

Data Source

MSC_IOG20_APG40

Source Field

NLALOCSUCC

Source Section

LOCAREAST

NLALOCTOT

Total # LU attempts

Data Source

MSC_IOG20_APG40

Source Field

NLALOCTOT

Source Section

LOCAREAST

NLALPESUCC

Number of successful periodic location updatings over A and Iu-interface.

Data Source

MSC_IOG20_APG40

Source Field

NLALPESUCC

Source Section

LOCAREAST

NLALPETOT

Number of periodic location updatings over A and Iu-interface.

Data Source

MSC_IOG20_APG40

Source Field

NLALPETOT

Source Section

LOCAREAST

NLAPAG1LOTOT

first page attempts to a LA

Data Source

MSC_IOG20_APG40

Source Field

NLAPAG1LOTOT

Source Section

LOCAREAST

NLAPAG1RESUCC

page responses to first page to a LA

Data Source

MSC_IOG20_APG40

Source Field

NLAPAG1RESUCC

Source Section

LOCAREAST

NLAPAG2LOTOT

repeated page attempts to a LA

Data Source

MSC_IOG20_APG40

Source Field

NLAPAG2LOTOT

Source Section

LOCAREAST

NLAPAG2RESUCC

page responses to repeated page to a LA

Data Source

MSC_IOG20_APG40

Source Field

NLAPAG2RESUCC

Source Section

LOCAREAST

NLAPAGERR

Number of unsuccessful page responses (includes unexpected page responses, location area level)

Data Source

MSC_IOG20_APG40

Source Field

NLAPAGERR

Source Section

LOCAREAST

PERLEN

Period Length

LAPD Primitive Calculations

The following is a list of primitive calculations for the LAPD entity.

GRAPHmultiLineSeparator

Special Control Field for Multi-Line Graphs

Calculation

```
""
```

INTERVALS

Number of 60 minute intervals covered

Calculation

```
PERLEN / (1.0 * 60)
```

LocalName

LAPD Name

Updated: 2009-07-22

Calculation

```
LocalKey
```

NUMDAYS

of days in Report

Calculation

```
DAYSINREPORT()
```

NUMHOURS

of hours in Summation Data

Calculation

VENDORTECH

Vendor Technology

Calculation

```
isNull( PERLEN ) ? nullString() : "EricssonGSM"
```

LAPD Peg Counts

The following is a list of peg counts for the LAPD entity.

BSS_RELEASE

Release

CBADFRAME

Number of bad frames received on a device.

Data Source

BSC_IOG20_APG40

Source Field

CBADFRAME

Source Section

LAPD

CLINKFAIL

Number of LAPD link failures.

Data Source

BSC_IOG20_APG40

Source Field

CLINKFAIL

Source Section

LAPD

COVERLOAD

Number of LAPD overloads.

Data Source

BSC_IOG20_APG40

Source Field

COVERLOAD

Source Section

LAPD

CPROCOLERR

Number of LAPD protocol errors.

Data Source

BSC_IOG20_APG40

Source Field

CPROCOLERR

Source Section

LAPD

CRECIFRAME

Number of received LAPD I and UI frames (divided by 10 to prevent overflow).

Data Source

BSC_IOG20_APG40

Source Field

CRECIFRAME

Source Section

LAPD

CRETRANSM

Number of retransmitted LAPD frames.

Data Source

BSC_IOG20_APG40

Source Field

CRETRANSM

Source Section

LAPD

CTRIFRAME

Number of transmitted LAPD I and UI frames (divided by 10 to prevent overflow).

Data Source

BSC_IOG20_APG40

Source Field

CTRIFRAME

Source Section

LAPD

PERLEN

Period Length

LATA Primitive Calculations

The following is a list of primitive calculations for the LATA entity.

GRAPHmultiLineSeparator

Special Control Field for Multi-Line Graphs

Calculation

```
""
```

NUMDAYS

of days in Report

Calculation

```
DAYSINREPORT()
```

NUMHOURS

of hours in Summation Data

Calculation

LATA Peg Counts

The following is a list of peg counts for the LATA entity.

NLTPG1SUCC

Number of page responses to first location area pages to a LATA

NLTPG1TOT

Number of first location area page attempts to a LATA

NLTPG2SUCC

Number of page responses to repeated location area pages to a LATA

NLTPG2TOT

Number of repeated location area page attempts to a LATA

NLTWPGSUCC

Number of page responses to LATA wide paging

NLTWPGTOT

Number of LATA wide page attempts to a LATA

LossRoute Primitive Calculations

The following is a list of primitive calculations for the LossRoute entity.

GRAPHmultiLineSeparator

Special Control Field for Multi-Line Graphs

Calculation

```
""
```

INTERVALS

Number of 60 minute intervals covered

Calculation

```
PERLEN / (1.0 * 60)
```

NUMDAYS

of days in Report

Calculation

```
DAYSINREPORT()
```

NUMHOURS

of hours in Summation Data

Calculation

VENDORTECH

Vendor Technology

Calculation

```
isNull( PERLEN ) ? nullString() : "EricssonGSM"
```

LossRoute Peg Counts

The following is a list of peg counts for the LossRoute entity.

ABLOL_LOSSROUTE

Number of automatically (type-A) blocked devices

Data Source

MSC_IOG20_APG40

Source Field

ABLOL

Source Section

LOSSROUTE

BLOL_LOSSROUTE

Blocking device counter

Data Source

MSC_IOG20_APG40

Source Field

BLOL

Source Section

LOSSROUTE

ID1_LOSSROUTE

ID1 Global route number

Data Source

MSC_IOG20_APG40

Source Field

ID1

Source Section

LOSSROUTE

MBLOL_LOSSROUTE

Number of manually blocked devices

Data Source

MSC_IOG20_APG40

Source Field

MBLOL

Source Section

LOSSROUTE

MSC_RELEASE

Release

NABLOCACC_LOSSROUTE

Accumulated number of automatically type A blocked devices

Data Source

MSC_IOG20_APG40

Source Field

NABLOCACC

Source Section

LOSSROUTE

NANSW_LOSSROUTE

Number of answers

Data Source

MSC_IOG20_APG40

Source Field

NANSW

Source Section

LOSSROUTE

NBLOCACC_LOSSROUTE

Accumulated number of blocked devices counter

Data Source

MSC_IOG20_APG40

© Copyright IBM Corp. 2008, 2009. All Rights Reserved.

Source Field

NBLOCACC

Source Section

LOSSROUTE

NCALLS

Number of seizure attempts counter

Data Source

MSC_IOG20_APG40

Source Field

NCALLS

Source Section

LOSSROUTE

NDEV_LOSSROUTE

Connected device counter

Data Source

MSC_IOG20_APG40

Source Field

NDEV

Source Section

LOSSROUTE

NMBLOCACC_LOSSROUTE

Accumulated number of manually blocked devices

Data Source

MSC_IOG20_APG40

Source Field

NMBLOCACC

Source Section

LOSSROUTE

NOBLOCACC_LOSSROUTE

Accumulated number of 'other' blocked devices

Data Source

MSC_IOG20_APG40

Source Field

NOBLOCACC

Source Section

LOSSROUTE

NOVERFLOW_LOSSROUTE

Number of congested call attempts

Data Source

MSC_IOG20_APG40

Source Field

NOVERFLOW

Source Section

LOSSROUTE

NSCAN_LOSSROUTE

Number of accumulations counter

Data Source

MSC_IOG20_APG40

Source Field

NSCAN

Source Section

LOSSROUTE

© Copyright IBM Corp. 2008, 2009. All Rights Reserved.

NTRALACC_LOSSROUTE

Accumulated traffic level counter

Data Source

MSC_IOG20_APG40

Source Field

NTRALACC

Source Section

LOSSROUTE

OBLOL_LOSSROUTE

Number of "other" blocked devices (other than manually or automatically type A blocked devices)

Data Source

MSC_IOG20_APG40

Source Field

OBLOL

Source Section

LOSSROUTE

PERLEN

Period Length

TRAL_LOSSROUTE

Traffic level counter

Data Source

MSC_IOG20_APG40

Source Field

TRAL

Source Section

LOSSROUTE

Lower_Order_Path Primitive Calculations

The following is a list of primitive calculations for the Lower_Order_Path entity.

GRAPHmultiLineSeparator

Special Control Field for Multi-Line Graphs

Calculation

```
""
```

LocalName

Lower_Order_Path ID

Calculation

```
LocalKey
```

NUMDAYS

of days in Report

Calculation

```
DAYSINREPORT()
```

NUMHOURS

of hours in Summation Data

Calculation

Lower_Order_Path Peg Counts

The following is a list of peg counts for the Lower_Order_Path entity.

LPFBBE

Number of background block errors lower order path far end

Data Source

BSC_IOG20_APG40

© Copyright IBM Corp. 2008, 2009. All Rights Reserved.

Source Field

LPFBBE

Source Section

SDIPLP

LPFES

Number of errored seconds far end Lower order path

Data Source

BSC_IOG20_APG40

Source Field

LPFES

Source Section

SDIPLP

LPFSES

Number of severely errored seconds far end lower order path

Data Source

BSC_IOG20_APG40

Source Field

LPFSES

Source Section

SDIPLP

LPFUAS

Number of unavailable seconds far end lower order path

Data Source

BSC_IOG20_APG40

Source Field

LPFUAS

Source Section

SDIPLP

LPFUAV

Number of unavailable events far end lower order path

Data Source

BSC_IOG20_APG40

Source Field

LPFUAV

Source Section

SDIPLP

LPNBBE

Number of background block errors lower order path near end

Data Source

BSC_IOG20_APG40

Source Field

LPNBBE

Source Section

SDIPLP

LPNES

Number of errored seconds near end Lower order path

Data Source

BSC_IOG20_APG40

Source Field

LPNES

Source Section

SDIPLP

© Copyright IBM Corp. 2008, 2009. All Rights Reserved.

LPNSES

Number of severely errored seconds near end lower order path

Data Source

BSC_IOG20_APG40

Source Field

LPNSES

Source Section

SDIPLP

LPNUAS

Number of unavailable seconds near end lower order path

Data Source

BSC_IOG20_APG40

Source Field

LPNUAS

Source Section

SDIPLP

LPNUAV

Number of unavailable events near end lower order path

Data Source

BSC_IOG20_APG40

Source Field

LPNUAV

Source Section

SDIPLP

PERLEN

Period Length

SMI

Flag indicating if any suspect marked intervals occured during24 h measurement period lower order path

Data Source

BSC_IOG20_APG40

Source Field

SMI

Source Section

SDIPLP

MapOp Primitive Calculations

The following is a list of primitive calculations for the MapOp entity.

GRAPHmultiLineSeparator

Special Control Field for Multi-Line Graphs

Calculation

```
""
```

INTERVALS

Number of 60 minute intervals covered

Calculation

```
PERLEN / (1.0 * 60)
```

NUMDAYS

of days in Report

Calculation

```
DAYSINREPORT()
```

NUMHOURS

of hours in Summation Data

Calculation

© Copyright IBM Corp. 2008, 2009. All Rights Reserved.

VENDORTECH

Vendor Technology

Calculation

```
isNull( PERLEN ) ? nullString() : "EricssonGSM"
```

MapOp Peg Counts

The following is a list of peg counts for the MapOp entity.

MSC_RELEASE

Release

NMAP1FLT

Number of unsuccessful MAP V2 and MAP V3 "Restore Data" operations because of local Transaction Capability Application Part (TCAP) resource problems

Data Source

MSC_IOG20_APG40

Source Field

NMAP1FLT

Source Section

MAPSIGIWRK

NMAP1SUCC

Number of successful MAP V2 and MAP V3 "Restore Data" operations

Data Source

MSC_IOG20_APG40

Source Field

NMAP1SUCC

Source Section

MAPSIGIWRK

NMAP1TOT

Number of requests for MAP V2 and MAP V3 "Restore Data" operations

Data Source

MSC_IOG20_APG40

Source Field

NMAP1TOT

Source Section

MAPSIGIWRK

NMAP1TOTST

Number of queued requests for MAP V1 and MAP V2 operations 'Reset' at a given instant

Data Source

MSC_IOG20_APG40

Source Field

NMAP1TOTST

Source Section

MAPSIGIWRK

NMAP2FLT

Number of unsuccessful MAP V2 and MAP V3 "Activate Trace Mode" operations because of local TCAP resource problems

Data Source

MSC_IOG20_APG40

Source Field

NMAP2FLT

Source Section

MAPSIGIWRK

© Copyright IBM Corp. 2008, 2009. All Rights Reserved.

NMAP2SUCC

Number of successful MAP V2 and MAP V3 "Activate Trace Mode" operations in connection with "Restore Data"

Data Source

MSC_IOG20_APG40

Source Field

NMAP2SUCC

Source Section

MAPSIGIWRK

NMAP2TOT

Number of requests for MAP V2 and MAP V3 "Activate Trace Mode" operations

Data Source

MSC_IOG20_APG40

Source Field

NMAP2TOT

Source Section

MAPSIGIWRK

NMAP3FLT

Number of unsuccessful MAP V2 and MAP V3 "Insert Subscriber Data" operations because of local TCAP resource problems

Data Source

MSC_IOG20_APG40

Source Field

NMAP3FLT

Source Section

MAPSIGIWRK

NMAP3SUCC

Number of successful MAP V2 and MAP V3 "Insert Subscriber Data" operations in connection with "Restore Data"

Data Source

MSC_IOG20_APG40

Source Field

NMAP3SUCC

Source Section

MAPSIGIWRK

NMAP3TOT

Number of requests for MAP V1, MAP V2, and MAP V3 "Insert Subscriber Data" operations

Data Source

MSC_IOG20_APG40

Source Field

NMAP3TOT

Source Section

MAPSIGIWRK

PERLEN

Period Length

MSC Available Data Fields

The following is a list of available data fields for the MSC entity.

C7TMFILE_MSC_AvailableDataPct

C7TMFILE_MSC Available Data Pct

STS_MSC_AvailableDataPct

STS_MSC Available Data Pct

© Copyright IBM Corp. 2008, 2009. All Rights Reserved.

MSC Primitive Calculations

The following is a list of primitive calculations for the MSC entity.

AnsSwitchCallsFiltered

Answered Switched Calls

Calculation

```
AGGR(TrafficType[inGroup(LocalKey, "IEX", "ORG")], NANSW)
```

CP_LOAD%

CP load on average

Calculation

```
ACCLOAD / (1.0 * NSCAN)
```

FailedIncominginterMSChandoverattempts

Failed incoming inter MSC handover attempts

Calculation

```
protect(sum(NB_MSC, vsum(NNBRHINATOT, -1.0 * NNBRHINASUCC)))
```

FailedInterCelIntraMSCHandovers

Failed inter cell intra MSC Handover

Calculation

```
vsum(NHNDEBSTOT, NHNDBSSTOT, -1.0 * NHNDEBSSUCC, -1 * NHNDBSSSUCC)
```

FailedOutgoingInterMSCHandoverAttempts

Failed outgoing inter MSC Handover attempts

Calculation

```
protect(sum(NB_MSC, vsum(NNBRHBANTOT, NNBRHSNATOT, -1.0 * NNBRHBANSUCC, -
1.0 * NNBRHSNASUCC)))
```

FailSwitchCallsFiltered

Failed Switched Calls

Calculation

```
AGGR(TrafficType[inGroup(LocalKey, "IEX", "ORG")], vsum(NUNSUCC, NECONG))
```

GRAPHmultiLineSeparator

Special Control Field for Multi-Line Graphs

Calculation

```
""
```

IncominterMSChandoverattempts

Incoming inter MSC handover attempts

Calculation

```
AGGR(NB_MSC, NNBRHINATOT)
```

IntBSCIncHOAtts

Incoming Inter-BSC Handover Attempts

Calculation

```
vsum(NHNDEBSTOT, NHNDBSSTOT)
```

IntBSCIncHOFail%

Percentage Incoming Inter-BSC Handover Failures

Calculation

```
nullValue(IntBSCIncHOFails * 100.0 / IntBSCIncHOAtts, 0.0)
```

IntBSCIncHOFails

Incoming Inter-BSC Handover Failures

Calculation

```
vsum(NHNDEBSTOT, NHNDBSSTOT, -1 * NHNDEBSSUCC, -1 * NHNDBSSSUCC)
```

INTERVALS

Number of 60 minute intervals covered

Calculation

```
PERLEN / (1.0 * 60)
```

INTERVALS_TRAR

Number of 60 minute intervals covered (from TRAR data)

Calculation

```
PERLEN_TRAR / (1.0 * 60)
```

© Copyright IBM Corp. 2008, 2009. All Rights Reserved.

INTERVALS_TRART

Number of 60 minute intervals covered (from TRART data)

Calculation

```
PERLEN_TRART / (1.0 * 60)
```

IntMSCIncHOAtts

Incoming Inter-MSC Handover Attempts

Calculation

```
sum(bridgeList(LocalKey, System.MSC.NB_MSC, LocalKey), NNBRHINATOT)
```

IntMSCIncHOFail%

Percentage Incoming Inter-MSC Handover Failures

Calculation

```
nullValue(IntMSCIncHOFails * 100.0 / IntMSCIncHOAtts, 0.0)
```

IntMSCIncHOFails

Incoming Inter-MSC Handover Failures

Calculation

```
sum(bridgeList(LocalKey, System.MSC.NB_MSC, LocalKey), NNBRHINATOT -
NNBRHINASUCC)
```

IntMSCOutHOAtts

Outgoing Inter-MSC Handover Attempts

Calculation

```
AGGR(NB_MSC, vsum(NNBRHBANTOT, NNBRHSNATOT))
```

IntMSCOutHOFail%

Percentage Outgoing Inter-MSC Handover Failures

Calculation

```
nullValue(IntMSCOutHOFails * 100.0 / IntMSCOutHOAtts, 0.0)
```

IntMSCOutHOFails

Outgoing Inter-MSC Handover Failures

Calculation

```
AGGR(NB_MSC, vsum(NNBRHBANTOT, NNBRHSNATOT, -1 * NNBRHBANSUCC, -1 * NNBRHS-
NASUCC))
```

LU_IMSI_AT

Ratio between IMSI attach/detach and all location updates. (When BSC parameter ATT = on)

Calculation

```
NLOCATTTOT * 100.0 / NLOCOLDTOT
```

LU_IMSI_DE

Ratio between IMSI detach and IMSI attach

Calculation

```
NLOCDETTOT * 100.0 / NLOCATTTOT
```

LU_NORM

Ratio between location updates made when an MS is changing loaction area and all location updates

Calculation

```
(NLOCOLDTOT - NLOCPERTOT - NLOCATTTOT) * 100.0 / NLOCOLDTOT
```

LU_NR

The rate of location update from non registered subscribers

Calculation

```
NLOCNRGTOT * 100.0 / (NLOCOLDTOT + NLOCNRGTOT)
```

LU_NR_SUC

The success rate for location updates made by subscribers not registered in VLR

Calculation

```
NLOCNRGSUCC * 100.0 / NLOCNRGTOT
```

LU_PERIOD

Ratio between periodic registrations and all location updates

Calculation

```
NLOCPERTOT * 100.0 / NLOCOLDTOT
```

© Copyright IBM Corp. 2008, 2009. All Rights Reserved.

LU_R

The rate of location update from registered subscribers

Calculation

```
NLOCOLDTOT * 100.0 / (NLOCOLDTOT + NLOCNRGTOT)
```

LU_R_SUC

The success rate for location updates made by subscribers already registered in VLR

Calculation

```
NLOCOLDSUCC * 100.0 / NLOCOLDTOT
```

LU_SUC

The percentage rate of location update success registered and non registered subscribers

Calculation

```
vsum(NLOCOLDSUCC, NLOCNRGSUCC) * 100.0 / vsum( (1.0 * NLOCOLDTOT), NLOCNRG-
TOT)
```

LU_TOT

Number of location update attempts

Calculation

```
NLOCOLDTOT + NLOCNRGTOT
```

MobileTerminatingFailedCalls

Mobile Terminating Failed Calls

Calculation

```
vsum(NCHATOMTOT, -1.0 * NCHATOMSUCC)
```

MobilOriginatingFailedCalls

Mobil Originating Failed Calls

Calculation

```
vsum(NCHAFRMTOT, -1.0 * NCHAFRMSUCC)
```

MocMtcSetupSuccessRate

Call setup success. Successful TCH Assignments of Tot Nr of Assignment Attempts %

Calculation

```
(NCHAFRMSUCC + NCHATOMSUCC) * 100.0 / (NCHAFRMTOT + NCHATOMTOT)
```

Updated: 2009-07-22

MocMtcSetupSuccessRate_UMTS

UMTS Call setup success. Successful TCH Assignments of Tot Nr of Assignment Attempts %

Calculation

```
(NMSFRMSCCI + NMSTOMSCCO) * 100.0 / (NMSFRMTOTI + NMSTOMTOTO)
```

MocMtcSetupSuccessRateUMTS

RAB assignment success rate % (includes both MOC and MTC)

Calculation

```
(NMSFRMSCCI + NMSTOMSCCO) * 100.0 / (NMSFRMTOTI + NMSTOMTOTO)
```

MocSetupRatio

Mobile Originating traffic %

Calculation

```
NCHAFRMTOT * 100.0 / (NCHAFRMTOT + NCHATOMTOT)
```

MocSetupRatio_UMTS

UMTS Mobile Originating traffic %

Calculation

```
NMSFRMTOTI * 100.0 / (NMSFRMTOTI + NMSTOMTOTO)
```

MocSetupRatioUMTS

Mobile Originated Traffic in % of total traffic.

Calculation

```
NMSFRMTOTI * 100.0 / (NMSFRMTOTI + NMSTOMTOTO)
```

MocSetupSuccessRate

MOC setup success. Successful originating MSC channel assignments %

Calculation

```
NCHAFRMSUCC * 100.0 / NCHAFRMTOT
```

MocSetupSuccessRate_UMTS

UMTS MOC setup success. Successful originating MSC channel assignments %

Calculation

```
NMSFRMSCCI * 100.0 / NMSFRMTOTI
```

© Copyright IBM Corp. 2008, 2009. All Rights Reserved.

MocSetupSuccessRateUMTS

RAB assignment success rate % for Mobile Originated Call (MOC)

Calculation

```
NMSFRMSCCI * 100.0 / NMSFRMTOTI
```

MtcSetupRatio

Mobile Terminating traffic %

Calculation

```
NCHATOMTOT * 100.0 / (NCHAFRMTOT + NCHATOMTOT)
```

MtcSetupRatio_UMTS

UMTS Mobile Terminating traffic %

Calculation

```
NMSTOMTOTO * 100.0 / (NMSFRMTOTI + NMSTOMTOTO)
```

MtcSetupRatioUMTS

Mobile Originated Traffic in % of total traffic.

Calculation

```
NMSTOMTOTO * 100.0 / (NMSFRMTOTI + NMSTOMTOTO)
```

MtcSetupSuccessRate

MTC setup success. Successful terminating MSC channel assignments %

Calculation

```
NCHATOMSUCC * 100.0 / NCHATOMTOT
```

MtcSetupSuccessRate_UMTS

UMTS MTC setup success. Successful terminating MSC channel assignments %

Calculation

```
NMSTOMSCCO * 100.0 / NMSTOMTOTO
```

MtcSetupSuccessRateUMTS

RAB assignment success rate % for Mobile Terminated Call (MTC)

Calculation

```
NMSTOMSCCO * 100.0 / NMSTOMTOTO
```

NANSWERS_BW

Number of seizures that leads to a B-answer on the incoming and outgoing trunks

Calculation

```
AGGR(TrunkRoute, NANSWERS_BW) / 2.0
```

NCALLS_BW

Number of detected seizures by the incoming and outgoing trunks

Calculation

```
AGGR(TrunkRoute, NCALLS_BW) / 2.0
```

NHLRMSST_AVG

Subscriber in VLR

Calculation

```
sum(HLRSubs,NHLRMSST)
```

NHLRMSST_MAX

Subscriber in VLR

Calculation

```
sum(HLRSubs,NHLRMSST)
```

NISUPATP_BW

Number of ATP received on incoming and outgoing routes

Calculation

```
AGGR(TrunkRoute, NISUPATP_BW) / 2.0
```

NOVERFLOW_BW

Number of congested call attempts on incoming and outgoing trunks

Calculation

```
AGGR(TrunkRoute, NOVERFLOW_BW) / 2.0
```

NRESTRICT_BW

Sum of Number of Incoming and Outgoing calls rejected due to the function restriction of accessible incoming and outgoing circuits

Calculation

```
AGGR(TrunkRoute, NRESTRICT_BW) / 2.0
```

© Copyright IBM Corp. 2008, 2009. All Rights Reserved.

NSEMIPERC_BW

Number of semiperminant connection (Both Way)

Calculation

```
AGGR(TrunkRoute, NSEMIPERC_BW) / 2.0
```

NTRALACC_TRUNKROUTE_BW

Accumulated traffic level (Both Way)

Calculation

```
AGGR(TrunkRoute, NTRALACC_TRUNKROUTE_BW) / 2.0
```

NUMDAYS

of days in Report

Calculation

```
DAYSINREPORT()
```

NUMHOURS

of hours in Summation Data

Calculation

OutgoingInterMSCHandoverAttempts

Outgoing inter MSC Handover attempts

Calculation

```
protect(sum(NB_MSC, vsum(NNBRHBANTOT, NNBRHSNATOT)))
```

PercAnsSwitchCallsFiltered

Percentage Answered Switched Calls

Calculation

```
100 * AGGR(TrafficType[inGroup(LocalKey, "IEX", "ORG")], (NANSW / (1.0 *
vsum(NCALLS, -1.0 * NICONG))))
```

PercFailCallsFiltered

Percentage Failed Calls on an MSC

Calculation

```
100 * AGGR(TrafficType[inGroup(LocalKey, "IEX", "ORG")], (vsum(NUNSUCC,
NICONG, NECONG) / (1.0 * NCALLS)))
```

PercFailSwitchCallsFiltered

Percentage Failed Switched Calls

Calculation

```
100 * AGGR(TrafficType[inGroup(LocalKey, "IEX", "ORG")], (vsum(NUNSUCC,
NECONG) / (1.0 * vsum(NCALLS, -1.0 * NICONG))))
```

SMS_MO_SUC

Successful Transfer of Mobile Originated SMSs

Calculation

```
NSMSCAOSUCC * 100.0 / NSMSCDOTOT
```

SMS_MOSENT

Number of Mobile Originated Requests for SMS Delivery towards SC

Calculation

```
NSMSCDOTOT * 100.0 / NSMSRDOTOT
```

SMS_MT_SUC

Successful SMS deliveries towards MSs of Total Number of Sent SMSs towards MSs

Calculation

```
NSMSCMRSUCC * 100.0 / NSMSCMTOT
```

SMS_MTSENT

Number of SMS-GMSC Requests for SMS delivery towards MSs

Calculation

```
NSMSCMTOT * 100.0 / NSMSSMRLTOT
```

SMS_Successful

Number of successful SMS Total

Calculation

```
(NSMSCAOSUCC + NSMSSRSUCC) * 100.0 / (NSMSCMTOT + NSMSCDOTOT)
```

© Copyright IBM Corp. 2008, 2009. All Rights Reserved.

SRNCDroppedCallRate

Dropped Call (%)

Calculation

```
NRELRELERR * 100.0 / NRELRNCTOT
```

SRNCRelocationSuccessRate

SRNC Relocation Success (%)

Calculation

```
NRELRNCSUCC * 100.0 / NRELRNCTOT
```

SRNCRelocSucSigChanRate

SRNC Relocation Success on Signalling Channel %

Calculation

```
NRELSDHSUCC * 100.0 / NRELSDHTOT
```

SRNCSwitchBackRate

Switch Back (%)

Calculation

```
NRELATTSUCC * 100.0 / NRELRNCTOT
```

SuccessfulInterCelIntraMSCHandovers

Successful inter cell intra MSC Handover

Calculation

```
vsum(NHNDEBSSUCC, NHNDIBSSUCC)
```

SwitchCallsFiltered

Switched Calls

Calculation

```
AGGR(TrafficType[inGroup(LocalKey, "IEX", "ORG")], vsum(NCALLS, -1.0 *
NICONG))
```

SwitchedAttmptFiltered

Switched Attempt

Calculation

```
AGGR(TrafficType[inGroup(LocalKey, "IEX", "ORG")], NCALLS)
```

Updated: 2009-07-22

SwitchTraffFiltered

Switched Traffic

Calculation

```
sum(TrafficType[inGroup(LocalKey, "IEX", "ORG")], SwitchedTraffic)
```

TotalGlobalPages

Total Global Pages on an MSC

Calculation

```
vsum(NPAG1GLTOT, NPAG2GLTOT)
```

TotalInterSwitchTraffic

Total Inter Switch Traffic

Calculation

```
protect(sum(TrunkRoute[(subString(LocalKey,0,1) == "M")], SUMTRAFLVL) /
(1.0 * ACCTRAFCNTR))
```

TotalLADirectedPages

Total LA Directed Pages on an MSC

Calculation

```
vsum(NPAG1LOTOT, NPAG2LOTOT)
```

TotalPOITraffic

Total POI Traffic

Calculation

```
protect(sum(TrunkRoute[inGroup(subString(LocalKey,0,2), "PH", "BO", "OL",
"KO", "RD", "AL", "TG") ], SUMTRAFLVL) / (1.0 * ACCTRAFCNTR))
```

TotalSwitchedTraffic

Total Switched Traffic on an MSC

Calculation

```
sum(TrafficType[inGroup(LocalKey, "IEX", "ORG")], SwitchedTraffic)
```

TRAL_TRUNKROUTE_BW

Indicator of the number of seized individuals by incoming and outgoing routes.

© Copyright IBM Corp. 2008, 2009. All Rights Reserved.

Calculation

```
AGGR(TrunkRoute, TRAL_TRUNKROUTE_BW) / 2.0
```

VENDORTECH

Vendor Technology

Calculation

```
isNull( PERLEN ) ? nullString() : "EricssonGSM"
```

MSC Peg Counts

The following is a list of peg counts for the MSC entity.

ABLOL_MSC

Number of RP's in blocking state, aut. blocked.

Data Source

MSC_IOG20_APG40

Source Field

ABLOL

Source Section

RP

ACCBLKCNTR

Number of accumulations of the blocking level counter

Data Source

MSC_TRAR

Source Field

ACCBLKCNTR

Source Section

ASC_TRAR

ACCLOAD

Accumulated Processor Load in percent

Data Source

MSC_IOG20_APG40

Source Field

ACCLOAD

Source Section

LOAS

ACCTRAFCNTR

Number of accumulations of the traffic level counter

Data Source

MSC_TRAR

Source Field

ACCTRAFCNTR

Source Section

ASC_TRAR

BLOLCLM

Number of blocked CLMs (blocking level).

Data Source

MSC_IOG20_APG40

Source Field

BLOLCLM

Source Section

GRPSWITCH

BLOLEMUX

Number of blocked EMUXs (blocking level) in both planes.

Data Source

MSC_IOG20_APG40

© Copyright IBM Corp. 2008, 2009. All Rights Reserved.

Source Field

BLOLEMUX

Source Section

GRPSWITCH

BLOLEMUXA

Number of blocked EMUXs (blocking level) in the A plane.

Data Source

MSC_IOG20_APG40

Source Field

BLOLEMUXA

Source Section

GRPSWITCH

BLOLEMUXB

Number of blocked EMUXs (blocking level) in the B plane.

Data Source

MSC_IOG20_APG40

Source Field

BLOLEMUXB

Source Section

GRPSWITCH

BLOLSPM

Number of blocked SPMs (blocking level) in both planes.

Data Source

MSC_IOG20_APG40

Source Field

BLOLSPM

Source Section

GRPSWITCH

BLOLSPMA

Number of blocked SPMs (blocking level) in the A-plane.

Data Source

MSC_IOG20_APG40

Source Field

BLOLSPMA

Source Section

GRPSWITCH

BLOLSPMB

Number of blocked SPMs (blocking level) in the B-plane.

Data Source

MSC_IOG20_APG40

Source Field

BLOLSPMB

Source Section

GRPSWITCH

BLOLTSM

Number of blocked TSMs (blocking level) in both planes.

Data Source

MSC_IOG20_APG40

Source Field

BLOLTSM

Source Section

GRPSWITCH

© Copyright IBM Corp. 2008, 2009. All Rights Reserved.

BLOLTSMA

Number of blocked TSMs (blocking level) in the A-plane.

Data Source

MSC_IOG20_APG40

Source Field

BLOLTSMA

Source Section

GRPSWITCH

BLOLTSMB

Number of blocked TSMs (blocking level) in the B-plane.

Data Source

MSC_IOG20_APG40

Source Field

BLOLTSMB

Source Section

GRPSWITCH

CALLATT

Number of call seizure attempts. This counter is never decremented

Data Source

MSC_IOG20_APG40

Source Field

CALLATT

Source Section

SHAM

CALLCNG

Number of call attempts that have met congestion. This counter is never decremented

Data Source

MSC_IOG20_APG40

Source Field

CALLCNG

Source Section

SHAM

CALLCNTI

Number of NS/EP calls received from incoming trunks.

Data Source

BSC_IOG20_APG40

Source Field

CALLCNTI

CALLNPPI

Number of NS/EP calls received from incoming trunks, without the Precedence parameter.

Data Source

BSC_IOG20_APG40

Source Field

CALLNPPI

CALLTRF

Number of occupied individuals. The counter gives continuous information on the number of calls which are at a given moment directed through the SSF. The counter is increased at each successful seizure attempt and decreased at release of the call

Data Source

MSC_IOG20_APG40

Source Field

CALLTRF

© Copyright IBM Corp. 2008, 2009. All Rights Reserved.

Source Section

SHAM

CDIALABORTSSF_SESSSF

Number of unsuccessful Dialogues, Aborted locally by SSF

Data Source

MSC_IOG20_APG40

Source Field

CDIALABORTSSF

Source Section

SESSSF

CDIALABORTSSF_SHAM

Number of unsuccessful dialogues, aborted by the SSF

Data Source

MSC_IOG20_APG40

Source Field

CDIALABORTSSF

Source Section

SHAM

CDIALATTFAIL_SESSSF

Number of unsuccessful Dialogues, Activity Test failed

Data Source

MSC_IOG20_APG40

Source Field

CDIALATTFAIL

Source Section

SESSSF

CDIALATTFAIL_SHAM

Number of Unsuccessful Dialogues, Activity Test Failed

Data Source

MSC_IOG20_APG40

Source Field

CDIALATTFAIL

Source Section

SHAM

CDIALINITATT_SESSSF

Number of Dialogue Initiation Attempts

Data Source

MSC_IOG20_APG40

Source Field

CDIALINITATT

Source Section

SESSSF

CDIALINITATT_SHAM

Dialogue Initiation Attempt

Data Source

MSC_IOG20_APG40

Source Field

CDIALINITATT

Source Section

SHAM

CDIALINITCONG_SESSSF

Number of Dialogue Initiation Attempts with congestion

© Copyright IBM Corp. 2008, 2009. All Rights Reserved.

Data Source

MSC_IOG20_APG40

Source Field

CDIALINITCONG

Source Section

SESSSF

CDIALINITCONG_SHAM

Dialogue Initiation Attempt Congestion

Data Source

MSC_IOG20_APG40

Source Field

CDIALINITCONG

Source Section

SHAM

CDIALINPROG_SESSSF

Number of Dialogues in progress

Data Source

MSC_IOG20_APG40

Source Field

CDIALINPROG

Source Section

SESSSF

CDIALINPROG_SHAM

Number of dialogues in progress

Data Source

MSC_IOG20_APG40

Source Field

CDIALINPROG

Source Section

SHAM

CDIALPROCESSED_SESSSF

Total number of Dialogues processed

Data Source

MSC_IOG20_APG40

Source Field

CDIALPROCESSED

Source Section

SESSSF

CDIALPROCESSED_SHAM

Number of processed dialogues

Data Source

MSC_IOG20_APG40

Source Field

CDIALPROCESSED

Source Section

SHAM

CDIALREJTCAP_SESSSF

Number of unsuccessful Dialogues, Message not accepted by TCAP

Data Source

MSC_IOG20_APG40

Source Field

CDIALREJTCAP

© Copyright IBM Corp. 2008, 2009. All Rights Reserved.

Source Section

SESSSF

CDIALREJTCAP_SHAM

Number of unsuccessful dialogues, messages not accepted by TCAP

Data Source

MSC_IOG20_APG40

Source Field

CDIALREJTCAP

Source Section

SHAM

CDIALREMABORT_SESSSF

Number of unsuccessful Dialogues, Aborted by SCF or remote TCAP

Data Source

MSC_IOG20_APG40

Source Field

CDIALREMABORT

Source Section

SESSSF

CDIALREMABORT_SHAM

Number of unsuccessful dialogues, aborted by the SCF or remote TCAP.

Data Source

MSC_IOG20_APG40

Source Field

CDIALREMABORT

Source Section

SHAM

CDIALSCFERRREJ_SESSSF

Number of unsuccessful Dialouges, Error or Reject messages received from SCP

Data Source

MSC_IOG20_APG40

Source Field

CDIALSCFERRREJ

Source Section

SESSSF

CDIALSCFERRREJ_SHAM

Number of error or reject components received from the SCF

Data Source

MSC_IOG20_APG40

Source Field

CDIALSCFERRREJ

Source Section

SHAM

CDIALTIMEOUT

Number of unsuccessful Dialouges, Timeout on response

Data Source

MSC_IOG20_APG40

Source Field

CDIALTIMEOUT

Source Section

SESSSF

CERRREJSEND_SESSSF

Number of Error or Reject messages sent by SSP

© Copyright IBM Corp. 2008, 2009. All Rights Reserved.

Data Source

MSC_IOG20_APG40

Source Field

CERRREJSEND

Source Section

SESSSF

CERRREJSEND_SHAM

Number of error or reject components sent by the SSF

Data Source

MSC_IOG20_APG40

Source Field

CERRREJSEND

Source Section

SHAM

CGREQ

Number of service requests that are checked for Call Gapping

Data Source

MSC_IOG20_APG40

Source Field

CGREQ

Source Section

SHAM

CHASMSSUCC

Number of successful assignments for SMS on traffic channel

Data Source

MSC_IOG20_APG40

Source Field

CHASMSSUCC

Source Section

CHASSIGNT

CHASMSTOT

Number of assignment attempts for SMS on traffic channel

Data Source

MSC_IOG20_APG40

Source Field

CHASMSTOT

Source Section

CHASSIGNT

CLREQ

Number of service requests that are checked for Call Limit.

Data Source

MSC_IOG20_APG40

Source Field

CLREQ

Source Section

SHAM

COMPCLI

Number of calls where OoBTC is successfully performed and speech compression is applied on incoming Nb side.

Data Source

MSC_IOG20_APG40

© Copyright IBM Corp. 2008, 2009. All Rights Reserved.

Source Field

COMPCLI

Source Section

OOBTCSTAT

COMPCLO

Number of calls where OoBTC is successfully performed and speech compression is applied on outgoing Nb side.

Data Source

MSC_IOG20_APG40

Source Field

COMPCLO

Source Section

OOBTCSTAT

CONNSECT

Total number of simultaneous connection sections

Data Source

MSC_IOG20_APG40

Source Field

CONNSECT

Source Section

C7SCCPUSE

CONNSECT_SS7SCCPUSE

Total number of simultaneous connection sections

Data Source

MSC_IOG20_APG40

Source Field

CONNSECT

Source Section

SS7SCCPUSE

CREFREC

Counter for CREF messages received from MTP

Data Source

MSC_IOG20_APG40

Source Field

CREFREC

Source Section

C7SCQOS

CREFSENT

Counter for CREF messages sent to MTP

Data Source

MSC_IOG20_APG40

Source Field

CREFSENT

Source Section

C7SCQOS

CRREC

Counter for CR messages received from MTP

Data Source

MSC_IOG20_APG40

Source Field

CRREC

© Copyright IBM Corp. 2008, 2009. All Rights Reserved.

Source Section

C7SCQOS

CRSENT

Counter for CR messages sent to MTP

Data Source

MSC_IOG20_APG40

Source Field

CRSENT

Source Section

C7SCQOS

CSENDREQREJ_SESSSF

Number of message sending requests rejected by Protocol Adaption

Data Source

MSC_IOG20_APG40

Source Field

CSENDREQREJ

Source Section

SESSSF

CSENDREQREJ_SHAM

Message sending requests rejected by protocol adaption

Data Source

MSC_IOG20_APG40

Source Field

CSENDREQREJ

Source Section

SHAM

CTMACTMSD

Number of successful initial channel assignments on remote A-interface

Data Source

MSC_IOG20_APG40

Source Field

CTMACTMSD

Source Section

CHASSIGNT

CTMAMSSUP

Number of initial channel assignments on remote A-interface when CTM text telephony is requested by the MS

Data Source

MSC_IOG20_APG40

Source Field

CTMAMSSUP

Source Section

CHASSIGNT

CTMANCTMSD

Number of successful initial channel assignments on remote A-interface when CTM text telephony is requested by the MS but no CTM function is seized in C-MGW

Data Source

MSC_IOG20_APG40

Source Field

CTMANCTMSD

Source Section

CHASSIGNT

© Copyright IBM Corp. 2008, 2009. All Rights Reserved.

CTMIUCTMSD

Number of successful initial channel assignments on Iu-interface when CTM Text Telephony is requested by the MS and CTM function is seized in C-MGW

Data Source

MSC_IOG20_APG40

Source Field

CTMIUCTMSD

Source Section

CHASSIGNT

CTMIUMSSUP

Number of initial channel assignments on Iu-interface when CTM (Cellular Text Telephony Modem) text telephony is requested by the MS

Data Source

MSC_IOG20_APG40

Source Field

CTMIUMSSUP

Source Section

CHASSIGNT

CTMIUNCTMSD

Number of successful initial channel assignments on Iu-interface when CTM text telephony is requested by the MS but no CTM function is seized in C-MGW

Data Source

MSC_IOG20_APG40

Source Field

CTMIUNCTMSD

Source Section

CHASSIGNT

DIAATT

Number of dialogue seizure attempts

Data Source

MSC_IOG20_APG40

Source Field

DIAATT

Source Section

SHAM

DIACNG

Number of dialogue seizure attempts that meet congestion

Data Source

MSC_IOG20_APG40

Source Field

DIACNG

Source Section

SHAM

DIATRF

Number of occupied individuals. The counter is increased at each successful dialogue seizure attempt and decreased at release of the dialogue

Data Source

MSC_IOG20_APG40

Source Field

DIATRF

Source Section

SHAM

© Copyright IBM Corp. 2008, 2009. All Rights Reserved.

DMSU

Number of discarded MSU's

Data Source

MSC_IOG20_APG40

Source Field

DMSU

Source Section

SS7TOTAL

DSIF

Number of discarded MSU's octets

Data Source

MSC_IOG20_APG40

Source Field

DSIF

Source Section

SS7TOTAL

ERRREC

Counter for ERR messages received from MTP

Data Source

MSC_IOG20_APG40

Source Field

ERRREC

Source Section

C7SCQOS

ERRSENT

Counter for ERR messages sent to MTP

Data Source

MSC_IOG20_APG40

Source Field

ERRSENT

Source Section

C7SCQOS

ETCATT

Access attempts or seizure attempts. Total number of times an attempt is made to seize an ETC individual (including failed attempts)

Data Source

MSC_IOG20_APG40

Source Field

ETCATT

Source Section

SHAM

ETCCNG

Number of times an attempted seizure of an ETC individual fails

Data Source

MSC_IOG20_APG40

Source Field

ETCCNG

Source Section

SHAM

ETCTRF

Number of ETC individuals seized or "occupied" at a given instant (instantaneous traffic level).

© Copyright IBM Corp. 2008, 2009. All Rights Reserved.

Data Source

MSC_IOG20_APG40

Source Field

ETCTRF

Source Section

SHAM

GINVOKED

Number of MO GETS call requests.

Data Source

MSC_IOG20_APG40

Source Field

GINVOKED

Source Section

NSEPCALL

HNDSYNER

Number of own handovers with synchronisation error

Data Source

MSC_IOG20_APG40

Source Field

HNDSYNER

Source Section

HNDOVER

IMSU

Number of incoming MSU's

Data Source

MSC_IOG20_APG40

Source Field

IMSU

Source Section

SS7TOTAL

ISIF

Number of incoming SIF octets

Data Source

MSC_IOG20_APG40

Source Field

ISIF

Source Section

SS7TOTAL

LUDTREC

LUDT messages received from MTP

Data Source

MSC_IOG20_APG40

Source Field

LUDTREC

Source Section

C7SCQOS

LUDTSENT

LUDT messages sent to MTP

Data Source

MSC_IOG20_APG40

Source Field

LUDTSENT

© Copyright IBM Corp. 2008, 2009. All Rights Reserved.

Source Section

C7SCQOS

LUDTSREC

LUDTS messages received from MTP

Data Source

MSC_IOG20_APG40

Source Field

LUDTSREC

Source Section

C7SCQOS

LUDTSSENT

LUDTS messages sent to MTP

Data Source

MSC_IOG20_APG40

Source Field

LUDTSSENT

Source Section

C7SCQOS

MSC_RELEASE

Release

MSGHAND

Total messages handled from local or remote subsystem

Data Source

MSC_IOG20_APG40

Source Field

MSGHAND

Source Section

C7SCCPUSE

MSGPOL

Counter for syntax error detected

Data Source

MSC_IOG20_APG40

Source Field

MSGPOL

Source Section

C7SCPERF

MSGPOLREJ

Counter for not allowed policed messages

Data Source

MSC_IOG20_APG40

Source Field

MSGPOLREJ

Source Section

C7SCPERF

MSGRCL0

Total messages received for connectionless class 0

Data Source

MSC_IOG20_APG40

Source Field

MSGRCL0

Source Section

C7SCCPUSE

© Copyright IBM Corp. 2008, 2009. All Rights Reserved.

MSGRCL1

Total messages received for connectionless class 1

Data Source

MSC_IOG20_APG40

Source Field

MSGRCL1

Source Section

C7SCCPUSE

MSGRQGT

Counter for messages requiring global title translation

Data Source

MSC_IOG20_APG40

Source Field

MSGRQGT

Source Section

C7SCCPUSE

MSGSCL0

Total messages sent for connectionless class 0

Data Source

MSC_IOG20_APG40

Source Field

MSGSCL0

Source Section

C7SCCPUSE

MSGSCL1

Total messages sent for connectionless class 1

Data Source

MSC_IOG20_APG40

Source Field

MSGSCL1

Source Section

C7SCCPUSE

MSINVDPC

Number of MSUs discarded due to invalid destination point code

Data Source

MSC_IOG20_APG40

Source Field

MSINVDPC

Source Section

SS7TOTAL

MSINVSIO

Number of MSUs discarded due to invalid Service Indicator Octet

Data Source

MSC_IOG20_APG40

Source Field

MSINVSIO

Source Section

SS7TOTAL

MTNSEPPCALL

Number of mobile terminating NS/EP calls for which polling for a MGW is done.

Data Source

MSC_IOG20_APG40

© Copyright IBM Corp. 2008, 2009. All Rights Reserved.

Source Field

MTNSEPPCALL

Source Section

NSEPCALL

MTNSEPPFREL

Number of mobile terminating NS/EP calls for which attempts to select a MGW have been abandoned due to a forward release indication during polling.

Data Source

MSC_IOG20_APG40

Source Field

MTNSEPPFREL

Source Section

NSEPCALL

NACCBLOT

Accumulated system blocking time, in seconds.

Data Source

MSC_IOG20_APG40

Source Field

NACCBLOT

Source Section

CP

NACTINDIC

Number of received MS Activity Indication messages

Data Source

MSC_IOG20_APG40

Source Field

NACTINDIC

Source Section

GPRSGS

NALERT

Number of sent Alert Request messages

Data Source

MSC_IOG20_APG40

Source Field

NALERT

Source Section

GPRSGS

NAUTDISCLDC

Number of automatically disconnected calls due to long duration call

Data Source

MSC_IOG20_APG40

Source Field

NAUTDISCLDC

NAUTFTCSUCC

Number of successful requests for authentication parameters from HLR

Data Source

MSC_IOG20_APG40

Source Field

NAUTFTCSUCC

Source Section

SECHAND

© Copyright IBM Corp. 2008, 2009. All Rights Reserved.

NAUTFTCTOT

Number of request attempts for authentication parameters from HLR

Data Source

MSC_IOG20_APG40

Source Field

NAUTFTCTOT

Source Section

SECHAND

NAUTMACFAIL

Number of failed authentication due to invalid Message Authentication Code (MAC)

Data Source

MSC_IOG20_APG40

Source Field

NAUTMACFAIL

Source Section

SECHAND

NAUTPPREJ

Number of authentication reject received from PP

Data Source

MSC_IOG20_APG40

Source Field

NAUTPPREJ

Source Section

SECHAND

NAUTPPREP

Number of authentication reply received from PP

Data Source

MSC_IOG20_APG40

Source Field

NAUTPPREP

Source Section

SECHAND

NAUTPPREQ

Number of authentication requests sent to PP

Data Source

MSC_IOG20_APG40

Source Field

NAUTPPREQ

Source Section

SECHAND

NAUTREAFLT

Number of unsuccessful TMSI reallocations

Data Source

MSC_IOG20_APG40

Source Field

NAUTREAFLT

Source Section

SECHAND

NAUTREATOT

Number of TMSI reallocation attempts

Data Source

MSC_IOG20_APG40

© Copyright IBM Corp. 2008, 2009. All Rights Reserved.

Source Field

NAUTREATOT

Source Section

SECHAND

NAUTREQSUCC

Number of successful authentications including check of SRES

Data Source

MSC_IOG20_APG40

Source Field

NAUTREQSUCC

Source Section

SECHAND

NAUTREQTOT

Number of sent authentication requests

Data Source

MSC_IOG20_APG40

Source Field

NAUTREQTOT

Source Section

SECHAND

NAUTRESYNCH

Number of failed authentication due to resynchronization

Data Source

MSC_IOG20_APG40

Source Field

NAUTRESYNCH

Source Section

SECHAND

NAUTSREERR

Number of failed authentications due to invalid SRES

Data Source

MSC_IOG20_APG40

Source Field

NAUTSREERR

Source Section

SECHAND

NAUTTMSIERR

Number of failed authentications with TMSI due to invalid SRES

Data Source

MSC_IOG20_APG40

Source Field

NAUTTMSIERR

Source Section

SECHAND

NAUTTMSISUCC

Number of successful authentications with IMSI after failed TMSI authentication

Data Source

MSC_IOG20_APG40

Source Field

NAUTTMSISUCC

Source Section

SECHAND

© Copyright IBM Corp. 2008, 2009. All Rights Reserved.

NAUTTMSITOT

Number of sent authentication requests with TMSI

Data Source

MSC_IOG20_APG40

Source Field

NAUTTMSITOT

Source Section

SECHAND

NAUTUSETOT

Number of authentication requests using used triplets

Data Source

MSC_IOG20_APG40

Source Field

NAUTUSETOT

Source Section

SECHAND

NBLOCLMACC

Accumulated number of blocked CLMs.

Data Source

MSC_IOG20_APG40

Source Field

NBLOCLMACC

Source Section

GRPSWITCH

NBLOEMUXAACC

Accumulated value of BLOLEMUXA obtained during NSCAN scans.

Data Source

MSC_IOG20_APG40

Source Field

NBLOEMUXAACC

Source Section

GRPSWITCH

NBLOEMUXACC

Accumulated value of BLOLEMUX obtained during NSCAN scans.

Data Source

MSC_IOG20_APG40

Source Field

NBLOEMUXACC

Source Section

GRPSWITCH

NBLOEMUXBACC

Accumulated value of BLOLEMUXB obtained during NSCAN scans.

Data Source

MSC_IOG20_APG40

Source Field

NBLOEMUXBACC

Source Section

GRPSWITCH

NBLOL

Number of RP's in blocking state, man. blocked.

Data Source

MSC_IOG20_APG40

© Copyright IBM Corp. 2008, 2009. All Rights Reserved.

Source Field

NBLOL

Source Section

RP

NBLOSPMAACC

Number of blocked SPM's in the A-plane

Data Source

MSC_IOG20_APG40

Source Field

NBLOSPMAACC

Source Section

GRPSWITCH

NBLOSPMACC

Number of blocked SPM's in both planes

Data Source

MSC_IOG20_APG40

Source Field

NBLOSPMACC

Source Section

GRPSWITCH

NBLOSPMBACC

Number of blocked SPM's in the B-plane

Data Source

MSC_IOG20_APG40

Source Field

NBLOSPMBACC

Source Section

GRPSWITCH

NBLOTSMAACC

Accumulated number of blocked TSMs in the A-plane.

Data Source

MSC_IOG20_APG40

Source Field

NBLOTSMAACC

Source Section

GRPSWITCH

NBLOTSMACC

Accumulated number of blocked TSMs in both planes.

Data Source

MSC_IOG20_APG40

Source Field

NBLOTSMACC

Source Section

GRPSWITCH

NBLOTSMBACC

Accumulated number of blocked TSMs in the B-plane.

Data Source

MSC_IOG20_APG40

Source Field

NBLOTSMBACC

Source Section

GRPSWITCH

© Copyright IBM Corp. 2008, 2009. All Rights Reserved.

NCACOLDG

Number of caller interaction messages sent to collect digits.

Data Source

MSC_IOG20_APG40

Source Field

NCACOLDG

Source Section

TCAPBAS

NCANOSUBD

Number of calls not allowed because Feature Logic/subscriber data not located.

Data Source

MSC_IOG20_APG40

Source Field

NCANOSUBD

Source Section

TCAPBAS

NCAPREJCNT

Accumulations in requested HLR

Data Source

MSC_IOG20_APG40

Source Field

NCAPREJCNT

Source Section

LOAS

NCAPREQCNT

Number of Processor capacity requested in HLR

Data Source

MSC_IOG20_APG40

Source Field

NCAPREQCNT

Source Section

LOAS

NCELHUNNSUCC

Number of successful handovers to the target cell from unspecified neighboring serving cells.

Data Source

MSC_IOG20_APG40

Source Field

NCELHUNNSUCC

Source Section

CELLSTAT

NCELHUNNTOT

Number of handover attempts to the target cell from unspecified neighboring serving cells.

Data Source

MSC_IOG20_APG40

Source Field

NCELHUNNTOT

Source Section

CELLSTAT

NCELHUNSUCC

Number of successful handovers to the target cell from unknown serving cells.

Data Source

MSC_IOG20_APG40

© Copyright IBM Corp. 2008, 2009. All Rights Reserved.

Source Field

NCELHUNSUCC

Source Section

CELLSTAT

NCELHUNTOT

Number of handover attempts to the target cell from unknown serving cells.

Data Source

MSC_IOG20_APG40

Source Field

NCELHUNTOT

Source Section

CELLSTAT

NCHAFRMSUCC

Number of successful channel assignments for call from mobile subscriber

Data Source

MSC_IOG20_APG40

Source Field

NCHAFRMSUCC

Source Section

CHASSIGNT

NCHAFRMTOT

Number of channel assignments for call from mobile subscriber

Data Source

MSC_IOG20_APG40

Source Field

NCHAFRMTOT

Source Section

CHASSIGNT

NCHATOMSUCC

Number of successful channel assignments for call to mobile subscriber

Data Source

MSC_IOG20_APG40

Source Field

NCHATOMSUCC

Source Section

CHASSIGNT

NCHATOMTOT

Number of channel assignments for call to mobile subscriber

Data Source

MSC_IOG20_APG40

Source Field

NCHATOMTOT

Source Section

CHASSIGNT

NCIPATTTOT

Number of ciphering mode attempts

Data Source

MSC_IOG20_APG40

Source Field

NCIPATTTOT

Source Section

SECHAND

© Copyright IBM Corp. 2008, 2009. All Rights Reserved.

NCIPHREJ

Number of MM cipher reject in response PP request

Data Source

MSC_IOG20_APG40

Source Field

NCIPHREJ

Source Section

SECHAND

NCIPHREQ

Number of MM cipher request towards PP

Data Source

MSC_IOG20_APG40

Source Field

NCIPHREQ

Source Section

SECHAND

NCIPSETSUCC

Number of successful ciphering mode settings.

Data Source

MSC_IOG20_APG40

Source Field

NCIPSETSUCC

Source Section

SECHAND

NCLM

Number of CLMs.

Data Source

MSC_IOG20_APG40

Source Field

NCLM

Source Section

GRPSWITCH

NCPABLOT

Accumulated time of blocked CP-unit, autamatically blocked, in seconds.

Data Source

MSC_IOG20_APG40

Source Field

NCPABLOT

Source Section

CP

NCPMBLOT

Accumulated time of blocked CP-unit, manually blocked, in seconds.

Data Source

MSC_IOG20_APG40

Source Field

NCPMBLOT

Source Section

CP

NCTDCANCLOCDISC

Nr of disconn calls due to Call Teardown init by Location Cancel mess from HLR

Data Source

MSC_IOG20_APG40

© Copyright IBM Corp. 2008, 2009. All Rights Reserved.

Source Field

NCTDCANCLOCDISC

Source Section

DISCCALL

NCTDDISC

Number of disconnected calls due to Call Teardown initiated by command

Data Source

MSC_IOG20_APG40

Source Field

NCTDDISC

Source Section

DISCCALL

NDETGPRS

Number of received GPRS Detach messages

Data Source

MSC_IOG20_APG40

Source Field

NDETGPRS

Source Section

GPRSGS

NDISCCLINKMGWT

Number of calls disconnected due to wrong exchange data configuration (incompatible MGW types on incoming and outgoing access)

Data Source

MSC_IOG20_APG40

Source Field

NDISCCLINKMGWT

NDRPOVRLD

Number of incoming messages dropped due to an overload condition.

Data Source

MSC_IOG20_APG40

Source Field

NDRPOVRLD

Source Section

TCAPBAS

NDTAP1TOT

Total number of initiated DTAP messages for Location Services

Data Source

MSC_IOG20_APG40

Source Field

NDTAP1TOT

Source Section

DTAPLCS

NDTAPAGPS

Nr of accepted messages req dechipering keys or assistance data for A-GPS

Data Source

MSC_IOG20_APG40

Source Field

NDTAPAGPS

Source Section

DTAPLCS

© Copyright IBM Corp. 2008, 2009. All Rights Reserved.

NDTAPEOTD

Nr of accepted messages req dechipering keys or assistance data for E-OTD

Data Source

MSC_IOG20_APG40

Source Field

NDTAPEOTD

Source Section

DTAPLCS

NDTAPEXTOT

Total Nr of accepted mess req that Location Estimate is sent to a specific LCS

Data Source

MSC_IOG20_APG40

Source Field

NDTAPEXTOT

Source Section

DTAPLCS

NDTAPMSTOT

Total Nr of accepted mess requesting that Location Estimate is sent to the MS

Data Source

MSC_IOG20_APG40

Source Field

NDTAPMSTOT

Source Section

DTAPLCS

NDTAPSTOT

Total number of successful messages

Data Source

MSC_IOG20_APG40

Source Field

NDTAPSTOT

Source Section

DTAPLCS

NEMUX

Number of EMUXs.

Data Source

MSC_IOG20_APG40

Source Field

NEMUX

Source Section

GRPSWITCH

NEQIDBLKTOT

Number of IMEI check results from EIR where 'black listed' indicated

Data Source

MSC_IOG20_APG40

Source Field

NEQIDBLKTOT

Source Section

EQIDCON

NEQIDEIRTOT

Number of IMEI check attempts to EIR

Data Source

MSC_IOG20_APG40

© Copyright IBM Corp. 2008, 2009. All Rights Reserved.

Source Field

NEQIDEIRTOT

Source Section

EQIDCON

NEQIDGRYTOT

Number of IMEI check results from EIR where 'grey listed' indicated

Data Source

MSC_IOG20_APG40

Source Field

NEQIDGRYTOT

Source Section

EQIDCON

NEQIDMSSUCC

Number of successful IMEI fetches from MS

Data Source

MSC_IOG20_APG40

Source Field

NEQIDMSSUCC

Source Section

EQIDCON

NEQIDTOT

Number of IMEI fetch attempts towards MS

Data Source

MSC_IOG20_APG40

Source Field

NEQIDTOT

Source Section

EQIDCON

NEQIDUNKTOT

Number of IMEI check results from EIR where 'unknown' indicated

Data Source

MSC_IOG20_APG40

Source Field

NEQIDUNKTOT

Source Section

EQIDCON

NEQIDWHITOT

Number of IMEI check attempts to EIR where 'white listed' indicated

Data Source

MSC_IOG20_APG40

Source Field

NEQIDWHITOT

Source Section

EQIDCON

NERPROT

Number of error messages received because of a protocol error.

Data Source

MSC_IOG20_APG40

Source Field

NERPROT

Source Section

TCAPBAS

© Copyright IBM Corp. 2008, 2009. All Rights Reserved.

NERRCV

Number of error messages received (not within a termination message).

Data Source

MSC_IOG20_APG40

Source Field

NERRCV

Source Section

TCAPBAS

NERRUNEXD

Number of error messages received because of unexpected data.

Data Source

MSC_IOG20_APG40

Source Field

NERRUNEXD

Source Section

TCAPBAS

NERSUNEXD

Number of error messages sent because of unexpected data.

Data Source

MSC_IOG20_APG40

Source Field

NERSUNEXD

Source Section

TCAPBAS

NFENSUP

Number of CAMEL phase 3 data received but not supported

Data Source

MSC_IOG20_APG40

Source Field

NFENSUP

Source Section

CAMEL3

NFORLAPT

Number of forlopps aborted by APT.

Data Source

MSC_IOG20_APG40

Source Field

NFORLAPT

Source Section

CP

NFORLAPZ

Number of forlopps aborted by APZ.

Data Source

MSC_IOG20_APG40

Source Field

NFORLAPZ

Source Section

CP

NFORLMAN

Number of forlopps aborted manually.

Data Source

MSC_IOG20_APG40

© Copyright IBM Corp. 2008, 2009. All Rights Reserved.

Source Field

NFORLMAN

Source Section

CP

NFTDIEX

Number of incoming external calls fetched from the Exchange Input Load Supervision function.

Data Source

MSC_IOG20_APG40

Source Field

NFTDIEX

Source Section

LOAS

NFTDMHI

emergency calls and packet channel allocation attempts fetched from the Exchange Input Load Supervision Function

Data Source

MSC_IOG20_APG40

Source Field

NFTDMHI

Source Section

LOAS

NFTDMLO

The number of fetched high- and low priority maintenance tasks in Base Level Load Regulation.

Data Source

MSC_IOG20_APG40

Source Field

NFTDMLO

Source Section

LOAS

NFTDNPRIO

Number of non-priority originating calls fetched from the Processor Load Control function

Data Source

MSC_IOG20_APG40

Source Field

NFTDNPRIO

Source Section

LOAS

NFTDORG

originating calls (emergency calls not included) fetched from the Exchange Input Load Supervision function.

Data Source

MSC_IOG20_APG40

Source Field

NFTDORG

Source Section

LOAS

NFTDPRIO

Number of priority originating calls fetched from the Processor Load Control function

Data Source

MSC_IOG20_APG40

© Copyright IBM Corp. 2008, 2009. All Rights Reserved.

Source Field

NFTDPRIO

Source Section

LOAS

NFTDTCAP

Number of accepted processor capacity requests for low priority TCAP messages

Data Source

MSC_IOG20_APG40

Source Field

NFTDTCAP

Source Section

LOAS

NGUHBSCRNCSUCC

Number of successful handovers from BSC to RNC

Data Source

MSC_IOG20_APG40

Source Field

NGUHBSCRNCSUCC

Source Section

GUHNDOVER

NGUHBSCRNCTOT

Number of handover attempts from BSC to RNC

Data Source

MSC_IOG20_APG40

Source Field

NGUHBSCRNCTOT

Source Section

GUHNDOVER

NGUHNDATTSUCC

Number of handover attempts causing the UE to switch back to the old BSC

Data Source

MSC_IOG20_APG40

Source Field

NGUHNDATTSUCC

Source Section

GUHNDOVER

NGUHNDCMDTOT

Number of handover commands send during GSM to UMTS handover

Data Source

MSC_IOG20_APG40

Source Field

NGUHNDCMDTOT

Source Section

GUHNDOVER

NGUHNDHRQDTOT

Number of received handover required

Data Source

MSC_IOG20_APG40

Source Field

NGUHNDHRQDTOT

Source Section

GUHNDOVER

© Copyright IBM Corp. 2008, 2009. All Rights Reserved.

NGUHNDRELRR

Number of handover faults causing the MSC/VLR server to release the call

Data Source

MSC_IOG20_APG40

Source Field

NGUHNDRELRR

Source Section

GUHNDOVER

NGUHNDSDSUCC

Number of successful handovers from BSC to RNC on signalling channel

Data Source

MSC_IOG20_APG40

Source Field

NGUHNDSDSUCC

Source Section

GUHNDOVER

NGUHNDSDTOT

Number of handover attempts from BSC to RNC on signalling channel

Data Source

MSC_IOG20_APG40

Source Field

NGUHNDSDTOT

Source Section

GUHNDOVER

NGUHNDSHTSUCC

Nr of succ hos from BSC to RNC from signalling to traffic channel

Data Source

MSC_IOG20_APG40

Source Field

NGUHNDSHTSUCC

Source Section

GUHNDOVER

NGUHNDSHTTOT

Number of handover attempts from BSC to RNC from signalling to traffic channel

Data Source

MSC_IOG20_APG40

Source Field

NGUHNDSHTTOT

Source Section

GUHNDOVER

NGURELCGSSUCC

Nr of switch orders to the MGW triggered by reloc compl during GSM to UMTS ho

Data Source

MSC_IOG20_APG40

Source Field

NGURELCGSSUCC

Source Section

GUHNDOVER

NGURELDGSSUCC

Nr of switch orders to the MGW triggered by reloc detect during GSM to UMTS ho

Data Source

MSC_IOG20_APG40

© Copyright IBM Corp. 2008, 2009. All Rights Reserved.

Source Field

NGURELDGSSUCC

Source Section

GUHNDOVER

NGURELREQSUCC

Number of successful GSM TO UMTS relocation requests to the target RNC

Data Source

MSC_IOG20_APG40

Source Field

NGURELREQSUCC

Source Section

GUHNDOVER

NGURELREQTOT

Number of sent relocation requests to the target RNC

Data Source

MSC_IOG20_APG40

Source Field

NGURELREQTOT

Source Section

GUHNDOVER

NHNDATTSUCC

Number of handover attempts causing the MS to switch back to old traffic channel

Data Source

MSC_IOG20_APG40

Source Field

NHNDATTSUCC

Source Section

HNDOVER

NHNDBSSSUCC

Number of successful inter-BSS handovers which are successful intra-MSC handovers

Data Source

MSC_IOG20_APG40

Source Field

NHNDBSSSUCC

Source Section

HNDOVER

NHNDBSSTOT

Number of inter-BSS handover attempts which are intra-MSC handover attempts

Data Source

MSC_IOG20_APG40

Source Field

NHNDBSSTOT

Source Section

HNDOVER

NHNDCGSSUCC

Number of Group Switch (GS)-operations triggered by handover complete

Data Source

MSC_IOG20_APG40

Source Field

NHNDCGSSUCC

Source Section

HNDOVER

© Copyright IBM Corp. 2008, 2009. All Rights Reserved.

NHNDCMDTOT

Number of sent handover commands

Data Source

MSC_IOG20_APG40

Source Field

NHNDCMDTOT

Source Section

HNDOVER

NHNDDGSSUCC

Number of GS-operations triggered by handover detect

Data Source

MSC_IOG20_APG40

Source Field

NHNDDGSSUCC

Source Section

HNDOVER

NHNDEBSSUCC

Number of successful external intra-BSS handovers

Data Source

MSC_IOG20_APG40

Source Field

NHNDEBSSUCC

Source Section

HNDOVER

NHNDEBSTOT

Number of external intra-BSS handover attempts

Data Source

MSC_IOG20_APG40

Source Field

NHNDEBSTOT

Source Section

HNDOVER

NHNDESHSUCC

Number of successful external intra-BSS handovers on

Data Source

MSC_IOG20_APG40

Source Field

NHNDESHSUCC

Source Section

HNDOVER

NHNDESHTOT

Number of external intra-BSS handover attempts on SDCCH

Data Source

MSC_IOG20_APG40

Source Field

NHNDESHTOT

Source Section

HNDOVER

NHNDESTSUCC

Number of successful external intra-BSS handovers from SDCCH to Traffic Channel (TCH)

Data Source

MSC_IOG20_APG40

© Copyright IBM Corp. 2008, 2009. All Rights Reserved.

Source Field

NHNDESTSUCC

Source Section

HNDOVER

NHNDESTTOT

Number of external intra-BSS handover attempts from SDCCH to TCH

Data Source

MSC_IOG20_APG40

Source Field

NHNDESTTOT

Source Section

HNDOVER

NHNDIBSSUCC

Number of successful internal intra-BSS handovers (handover performed)

Data Source

MSC_IOG20_APG40

Source Field

NHNDIBSSUCC

Source Section

HNDOVER

NHNDRELERR

HO faults causing the MSC to release the call

Data Source

MSC_IOG20_APG40

Source Field

NHNDRELERR

Source Section

HNDOVER

NHNDREQSUCC

Number of successful handover requests to the target BSC

Data Source

MSC_IOG20_APG40

Source Field

NHNDREQSUCC

Source Section

HNDOVER

NHNDREQTOT

Number of sent handover requests to the target BSC

Data Source

MSC_IOG20_APG40

Source Field

NHNDREQTOT

Source Section

HNDOVER

NHNDRQDTOT

Number of received handover required

Data Source

MSC_IOG20_APG40

Source Field

NHNDRQDTOT

Source Section

HNDOVER

© Copyright IBM Corp. 2008, 2009. All Rights Reserved.

NHNDSDHSUCC

Number of successful inter-BSS handovers on SDCCH which are successful intra-MSC handovers

Data Source

MSC_IOG20_APG40

Source Field

NHNDSDHSUCC

Source Section

HNDOVER

NHNDSDHTOT

Number of inter-BSS handover attempts on SDCCH which are intra-MSC handover attempts

Data Source

MSC_IOG20_APG40

Source Field

NHNDSDHTOT

Source Section

HNDOVER

NHNDSHTSUCC

Number of successful inter-BSS handovers from SDCCH to TCH which are successful intra-MSC handovers

Data Source

MSC_IOG20_APG40

Source Field

NHNDSHTSUCC

Source Section

HNDOVER

NHNDSHTTOT

Number of inter-BSS handover attempts from SDCCH to TCH which are intra-MSC handovers

Data Source

MSC_IOG20_APG40

Source Field

NHNDSHTTOT

Source Section

HNDOVER

NHNDTGSSUCC

Number of GS-operations triggered by timer

Data Source

MSC_IOG20_APG40

Source Field

NHNDTGSSUCC

Source Section

HNDOVER

NHWFAULTS

Number of lost calls due to HW Faults

Data Source

MSC_IOG20_APG40

Source Field

NHWFAULTS

Source Section

EXCHFAULT

NINC

Number of NS/EP calls received from incoming trunks.

© Copyright IBM Corp. 2008, 2009. All Rights Reserved.

Data Source

MSC_IOG20_APG40

Source Field

NINC

Source Section

NSEPCALL

NINCASSG

Number of MT NS/EP calls after successful TCH assignment.

Data Source

MSC_IOG20_APG40

Source Field

NINCASSG

Source Section

NSEPCALL

NINCTERM

Number of NS/EP call received on incoming trunks whose destination is an MS served by this MSC.

Data Source

MSC_IOG20_APG40

Source Field

NINCTERM

Source Section

NSEPCALL

NIRNFRMSUCC

Nr of accepted 6 Kb/s non-transparent full rate service requests in moc

Data Source

MSC_IOG20_APG40

Source Field

NIRNFRMSUCC

Source Section

IRNEG

NIRNFRMTOT

Nr of 6 Kb/s non-transparent full rate service req in mobile originated calls

Data Source

MSC_IOG20_APG40

Source Field

NIRNFRMTOT

Source Section

IRNEG

NIRNTOSUCC

Nr of accepted 6 Kb/s non-transparent full rate service offers in mtc

Data Source

MSC_IOG20_APG40

Source Field

NIRNTOSUCC

Source Section

IRNEG

NIRNTOTOT

Nr of 6 Kb/s non-transparent full rate service offers in mtc

Data Source

MSC_IOG20_APG40

© Copyright IBM Corp. 2008, 2009. All Rights Reserved.

Source Field

NIRNTOTOT

Source Section

IRNEG

NL3CCONF

Number of received Layer 3 Call Control CALL CONFIRMED messages

Data Source

MSC_IOG20_APG40

Source Field

NL3CCONF

Source Section

L3CCMSG

NL3CPROC

Number of sent Layer 3 Call Control CALL PROCCEEDING messages

Data Source

MSC_IOG20_APG40

Source Field

NL3CPROC

Source Section

L3CCMSG

NLDC

Number of calls that have a duration longer than the predefined limit

Data Source

MSC_IOG20_APG40

Source Field

NLDC

NLIM2OLDSUCC

Number of successful IMSI attached location updatings for already registered subscribers over Gs interface).

Data Source

MSC_IOG20_APG40

Source Field

NLIM2OLDSUCC

Source Section

UPDLOCAT2

NLNOLDSUCC

Number of successful normal location updatings for already registered subscribers over A and Iu-interface

Data Source

MSC_IOG20_APG40

Source Field

NLNOLDSUCC

Source Section

UPDLOCAT

NLNOLDTOT

Number of normal location updating attempts for already registered subscribers over A and Iu-interface.

Data Source

MSC_IOG20_APG40

Source Field

NLNOLDTOT

Source Section

UPDLOCAT

© Copyright IBM Corp. 2008, 2009. All Rights Reserved.

NLNPQFAIL

Number of failed LNP database queries

Data Source

MSC_IOG20_APG40

Source Field

NLNPQFAIL

Source Section

LNPMAINT

NLNPQPORT

Number of LNP-SCP responses with LRN

Data Source

MSC_IOG20_APG40

Source Field

NLNPQPORT

Source Section

LNPMAINT

NLNPQTOT

Total number of LNP database queries

Data Source

MSC_IOG20_APG40

Source Field

NLNPQTOT

Source Section

LNPMAINT

NLOCATT2TOT

Number of IMSI attach messages received (from already registered subscribers 2nd block)

Data Source

MSC_IOG20_APG40

Source Field

NLOCATT2TOT

Source Section

UPDLOCAT

NLOCATTTOT

IMSI attach messages received (that is, when the IMSI becomes active in the same location area where it was detached)

Data Source

MSC_IOG20_APG40

Source Field

NLOCATTTOT

Source Section

UPDLOCAT

NLOCCONGSUCC

successful location updating indications sent to mobile subscribers, resulting from failure of operations 'update location' to HLR due to network congestion

Data Source

MSC_IOG20_APG40

Source Field

NLOCCONGSUCC

Source Section

UPDLOCAT

NLOCDET2TOT

Number of IMSI detach messages received (2nd block)

© Copyright IBM Corp. 2008, 2009. All Rights Reserved.

Data Source

MSC_IOG20_APG40

Source Field

NLOCDET2TOT

Source Section

UPDLOCAT

NLOCDETTOT

Number of IMSI detach messages received

Data Source

MSC_IOG20_APG40

Source Field

NLOCDETTOT

Source Section

UPDLOCAT

NLOCGPRSSUCC

Number of successful location updatings over Gs interface

Data Source

MSC_IOG20_APG40

Source Field

NLOCGPRSSUCC

Source Section

UPDLOCAT

NLOCGPRSTOT

Number of location updating attempts over Gs interface

Data Source

MSC_IOG20_APG40

Source Field

NLOCGPRSTOT

Source Section

UPDLOCAT

NLOCIDTTOT

Number of implicit detach events in an MSC/VLR

Data Source

MSC_IOG20_APG40

Source Field

NLOCIDTTOT

Source Section

UPDLOCAT

NLOCIMS2ERR

Number of failed location updating attempts due to unknown IMSI number series (2nd block)

Data Source

MSC_IOG20_APG40

Source Field

NLOCIMS2ERR

Source Section

UPDLOCAT

NLOCIMSERR

Number of failed location updating attempts due to unknown IMSI number series

Data Source

MSC_IOG20_APG40

Source Field

NLOCIMSERR

© Copyright IBM Corp. 2008, 2009. All Rights Reserved.

Source Section

UPDLOCAT

NLOCNRG2SUCC

Number of successful location updatings for non registered subscribers (2nd block)

Data Source

MSC_IOG20_APG40

Source Field

NLOCNRG2SUCC

Source Section

UPDLOCAT

NLOCNRG2TOT

Number of location updating attempts from non-registered subscribers (2nd block)

Data Source

MSC_IOG20_APG40

Source Field

NLOCNRG2TOT

Source Section

UPDLOCAT

NLOCNRGSUCC

Successful location updatings for non-registered subscribers

Data Source

MSC_IOG20_APG40

Source Field

NLOCNRGSUCC

Source Section

UPDLOCAT

NLOCNRGTOT

location updating attempts from non registered subscribers (IMSI attach, normal location updating,or periodic location updating)

Data Source

MSC_IOG20_APG40

Source Field

NLOCNRGTOT

Source Section

UPDLOCAT

NLOCNRRTOT

Number of national roaming implicit detach events in MSC/VLR

Data Source

MSC_IOG20_APG40

Source Field

NLOCNRRTOT

Source Section

UPDLOCAT

NLOCOLD2SUCC

Number of successful location updatings for already registered subscribers (2nd block)

Data Source

MSC_IOG20_APG40

Source Field

NLOCOLD2SUCC

Source Section

UPDLOCAT

© Copyright IBM Corp. 2008, 2009. All Rights Reserved.

NLOCOLD2TOT

Number of location updating attempts for already registered subscribers (2nd block)

Data Source

MSC_IOG20_APG40

Source Field

NLOCOLD2TOT

Source Section

UPDLOCAT

NLOCOLDSUCC

Successful location updatings for already registered subscribers

Data Source

MSC_IOG20_APG40

Source Field

NLOCOLDSUCC

Source Section

UPDLOCAT

NLOCOLDTOT

location updating attempts for already registered subscribers (IMSI attach, location updating, or periodic location updating)

Data Source

MSC_IOG20_APG40

Source Field

NLOCOLDTOT

Source Section

UPDLOCAT

NLOCPERTOT

periodic location updating attempts for already registered subscribers

Data Source

MSC_IOG20_APG40

Source Field

NLOCPERTOT

Source Section

UPDLOCAT

NLOCPUNEWCON

Number of periodic location updating requests when capacity not granted for non-registered subscribers

Data Source

MSC_IOG20_APG40

Source Field

NLOCPUNEWCON

Source Section

UPDLOCAT

NLOCPUOLDCON

Number of periodic location updating requests when capacity not granted for already registered subscribers

Data Source

MSC_IOG20_APG40

Source Field

NLOCPUOLDCON

Source Section

UPDLOCAT

© Copyright IBM Corp. 2008, 2009. All Rights Reserved.

NLOCPUTOTNEW

Number of periodic location updating requests for non-registered subscribers

Data Source

MSC_IOG20_APG40

Source Field

NLOCPUTOTNEW

Source Section

UPDLOCAT

NLOCREGSERR

Number of rejected location updating attempts due to regional subscription

Data Source

MSC_IOG20_APG40

Source Field

NLOCREGSERR

Source Section

UPDLOCAT

NLOCUPDSUCC

Successful location updatings

Data Source

MSC_IOG20_APG40

Source Field

NLOCUPDSUCC

Source Section

UPDLOCAT

NLOLDIMSUCC

Number of successful IMSI attached location updatings for already registered subscribers over A and Iu-interface

Data Source

MSC_IOG20_APG40

Source Field

NLOLDIMSUCC

Source Section

UPDLOCAT

NLOSTCL

Number of calls lost during conversation due to system restart

Data Source

MSC_IOG20_APG40

Source Field

NLOSTCL

Source Section

RESTART

NLOSTRE

Number of calls lost during call set-up due to system restart

Data Source

MSC_IOG20_APG40

Source Field

NLOSTRE

Source Section

RESTART

© Copyright IBM Corp. 2008, 2009. All Rights Reserved.

NLPERSUCC

Number of successful periodic location updatings over A and Iu-interface

Data Source

MSC_IOG20_APG40

Source Field

NLPERSUCC

Source Section

UPDLOCAT

NLRGA

Number of large restarts without reload, automatically initiated.

Data Source

MSC_IOG20_APG40

Source Field

NLRGA

Source Section

CP

NLRGM

Number of large restarts without reload, manually initiated.

Data Source

MSC_IOG20_APG40

Source Field

NLRGM

Source Section

CP

NLTMISTOT

Number of calls rejected due to LATA mismatch

Data Source

MSC_IOG20_APG40

Source Field

NLTMISTOT

Source Section

LATAMISTAT

NMANDISCLDC

Number of manually disconnected long duration calls

Data Source

MSC_IOG20_APG40

Source Field

NMANDISCLDC

NMAPVERR

Number of unsuccessful attempts to use MAP version 2 for the SM transfer pipeline in the SMS-GMSC

Data Source

MSC_IOG20_APG40

Source Field

NMAPVERR

Source Section

SMSGMSC

NMAUABLOT

Accumulated time of blocked MAU/AMU autamatically blocked, in seconds.

Data Source

MSC_IOG20_APG40

© Copyright IBM Corp. 2008, 2009. All Rights Reserved.

Source Field

NMAUABLOT

Source Section

CP

NMAUF

Number of MAU/AMU faults

Data Source

MSC_IOG20_APG40

Source Field

NMAUF

Source Section

CP

NMAUMBLOT

Accumulated time of blocked MAU/AMU, manually blocked, in seconds.

Data Source

MSC_IOG20_APG40

Source Field

NMAUMBLOT

Source Section

CP

NMMGSMSUCC

Number of accepted service requests for multi-media over 3.1kHz Audio

Data Source

MSC_IOG20_APG40

Source Field

NMMGSMSUCC

Source Section

OPTFEAT

NMMGSMTOT

Number of service requests for multi-media over 3.1kHz Audio

Data Source

MSC_IOG20_APG40

Source Field

NMMGSMTOT

Source Section

OPTFEAT

NMMUMTSSUCC

Number of accepted service requests for multi-media over UDI or RDI

Data Source

MSC_IOG20_APG40

Source Field

NMMUMTSSUCC

Source Section

OPTFEAT

NMMUMTSTOT

Number of service requests for multi-media over UDI or RDI

Data Source

MSC_IOG20_APG40

Source Field

NMMUMTSTOT

Source Section

OPTFEAT

© Copyright IBM Corp. 2008, 2009. All Rights Reserved.

NMMWPS

Number of invoked WPS calls in the MSC/VLR

Data Source

MSC_IOG20_APG40

Source Field

NMMWPS

Source Section

OPTFEAT

NMSCLOCACQSUCC

Number of successful location acquisition procedures

Data Source

MSC_IOG20_APG40

Source Field

NMSCLOCACQSUCC

Source Section

LCSSTAT

NMSCLOCACQTOT

Number of initiated location acquisition procedures

Data Source

MSC_IOG20_APG40

Source Field

NMSCLOCACQTOT

Source Section

LCSSTAT

NMSCP3LOCTOT

Total number of initiated Perform Location messages

Data Source

MSC_IOG20_APG40

Source Field

NMSCP3LOCTOT

Source Section

LCSSTAT

NMSCP4LOCSUCC

Number of successful messages

Data Source

MSC_IOG20_APG40

Source Field

NMSCP4LOCSUCC

Source Section

LCSSTAT

NMSCP5LOCEOTD

Nr of succ messages for which Location Estimate was generated by E-OTD method

Data Source

MSC_IOG20_APG40

Source Field

NMSCP5LOCEOTD

Source Section

LCSSTAT

NMSCP6LOCAGPS

Number of successful messages for which Location Estimate was generated by AGPS method.

Data Source

MSC_IOG20_APG40

© Copyright IBM Corp. 2008, 2009. All Rights Reserved.

Source Field

NMSCP6LOCAGPS

Source Section

LCSSTAT

NMSCP7LOCTIMADV

Nr of succ mess forn which Location Estimate was generated by TA method

Data Source

MSC_IOG20_APG40

Source Field

NMSCP7LOCTIMADV

Source Section

LCSSTAT

NMSCP8LOCUTDOA

Number of successful messages for which Location Estimate was generated by U-TDOA method.

Data Source

MSC_IOG20_APG40

Source Field

NMSCP8LOCUTDOA

Source Section

LCSSTAT

NMSFRMSCCI

Number of successful RAB assignments for a call from a mobile subscriber

Data Source

MSC_IOG20_APG40

Source Field

NMSFRMSCCI

Source Section

CHASSIGNT

NMSFRMTOTI

Total number of RAB assignments for a call from a mobile subscriber

Data Source

MSC_IOG20_APG40

Source Field

NMSFRMTOTI

Source Section

CHASSIGNT

NMSINFOREQ

Number of sent MS Information Request messages

Data Source

MSC_IOG20_APG40

Source Field

NMSINFOREQ

Source Section

GPRSGS

NMSINFORESP

Number of received MS Information Response messages

Data Source

MSC_IOG20_APG40

Source Field

NMSINFORESP

© Copyright IBM Corp. 2008, 2009. All Rights Reserved.

Source Section

GPRSGS

NMSP6LOCAGPS

Nr of succ messages for which Location Estimate was generated by AGPS method

Data Source

MSC_IOG20_APG40

Source Field

NMSP6LOCAGPS

Source Section

LCSSTAT

NMSTOMSCCO

Number of successful RAB assignments for a call to a mobile subscriber

Data Source

MSC_IOG20_APG40

Source Field

NMSTOMSCCO

Source Section

CHASSIGNT

NMSTOMTOTO

Total number of RAB assignments for a call to a mobile subscriber

Data Source

MSC_IOG20_APG40

Source Field

NMSTOMTOTO

Source Section

CHASSIGNT

NMSUNREACHGPRS

Number of MS Unreachable messages received as a response to a Paging Request message

Data Source

MSC_IOG20_APG40

Source Field

NMSUNREACHGPRS

Source Section

PAGING

NNOCKT

Number of unsuccessful NS/EP calls, not possible to be routed out of the exchange on an o/g trunk.

Data Source

MSC_IOG20_APG40

Source Field

NNOCKT

Source Section

NSEPCALL

NNOPRTY

Number of NS/EP calls received from incoming trunks, without the Precedence parameter.

Data Source

MSC_IOG20_APG40

Source Field

NNOPRTY

Source Section

NSEPCALL

© Copyright IBM Corp. 2008, 2009. All Rights Reserved.

NNOREC

Number of prog executions terminated

Data Source

MSC_IOG20_APG40

Source Field

NNOREC

Source Section

CP

NOCOMPI

Number of calls where OoBTC is successfully performed and speech compression is not applied on Nb incoming side (ie. G.711).

Data Source

MSC_IOG20_APG40

Source Field

NOCOMPI

Source Section

OOBTCSTAT

NOCOMPO

Number of calls where OoBTC is successfully performed and speech compression is not applied on Nb outgoing side (ie. G.711).

Data Source

MSC_IOG20_APG40

Source Field

NOCOMPO

Source Section

OOBTCSTAT

NODBCCTOT

Number of outgoing calls barred due to ODB in MSC/VLR server

Data Source

MSC_IOG20_APG40

Source Field

NODBCCTOT

Source Section

ODB

NODBCIPTOT

Nr of call independent supple-mentary services sub proc barred

Data Source

MSC_IOG20_APG40

Source Field

NODBCIPTOT

Source Section

ODB

NODBCP1TOT

Nr of call related supple-mentary services subscriber procedures barred

Data Source

MSC_IOG20_APG40

Source Field

NODBCP1TOT

Source Section

ODB

NODBCP2TOT

Nr of call related supple-mentary services subscriber procedures

© Copyright IBM Corp. 2008, 2009. All Rights Reserved.

Data Source

MSC_IOG20_APG40

Source Field

NODBCP2TOT

Source Section

ODB

NODBSMTOT

Number of outgoing short messages barred due to ODB in MSC/VLR server

Data Source

MSC_IOG20_APG40

Source Field

NODBSMTOT

Source Section

ODB

NOFFIEX

Number of incoming external calls offered to the Exchange Input Load Supervision function.

Data Source

MSC_IOG20_APG40

Source Field

NOFFIEX

Source Section

LOAS

NOFFMHI

emergency calls and packet channel allocation attempts offered to the Exchange Input Load Supervision Function

Data Source

MSC_IOG20_APG40

Source Field

NOFFMHI

Source Section

LOAS

NOFFMLO

The number of offered high- and low priority maintenance tasks in Base Level Load Regulation.

Data Source

MSC_IOG20_APG40

Source Field

NOFFMLO

Source Section

LOAS

NOFFNPRIO_MSC_LOAS

Number of non-priority originating calls offered to the Processor Load Control function

Data Source

MSC_IOG20_APG40

Source Field

NOFFNPRIO

Source Section

LOAS

NOFFORG

originating calls offered (emergency calls not included) to the Exchange Input Load Supervision function.

© Copyright IBM Corp. 2008, 2009. All Rights Reserved.

Data Source

MSC_IOG20_APG40

Source Field

NOFFORG

Source Section

LOAS

NOFFPRIO_MSC_LOAS

Number of priority originating calls offered to the Processor Load Control function

Data Source

MSC_IOG20_APG40

Source Field

NOFFPRIO

Source Section

LOAS

NOFFTCAP

Number of processor capacity requests for low priority TCAP messages offered to the Processor Load Control function

Data Source

MSC_IOG20_APG40

Source Field

NOFFTCAP

Source Section

LOAS

NORISMSUCC

Number of successful mobile originated short messages in SMS-IWMSC

Data Source

MSC_IOG20_APG40

Source Field

NORISMSUCC

Source Section

SMSIWMSC

NORISMTOT

Number of mobile originated short messages in SMS-IWMSC

Data Source

MSC_IOG20_APG40

Source Field

NORISMTOT

Source Section

SMSIWMSC

NOUTGO

Number of NS/EP calls with an established signaling link to the succeeding exchange.

Data Source

MSC_IOG20_APG40

Source Field

NOUTGO

Source Section

NSEPCALL

NOUTIXC

Number of NS/EP calls with an established signaling link to the succeeding IXC exchange.

Data Source

MSC_IOG20_APG40

© Copyright IBM Corp. 2008, 2009. All Rights Reserved.

Source Field

NOUTIXC

Source Section

NSEPCALL

NOUTIXNC

Number of unsuccessful NS/EP calls to an IXC, not possible to be routed out of the exchange on an o/g trunk.

Data Source

MSC_IOG20_APG40

Source Field

NOUTIXNC

Source Section

NSEPCALL

NPAG1GLTOT

first global page attempts

Data Source

MSC_IOG20_APG40

Source Field

NPAG1GLTOT

Source Section

PAGING

NPAG1GLUTOT

Number of first global page attempts over Iu interface

Data Source

MSC_IOG20_APG40

Source Field

NPAG1GLUTOT

Source Section

PAGING

NPAG1GPRSSUCC

Number of page responses to first page over Gs interface

Data Source

MSC_IOG20_APG40

Source Field

NPAG1GPRSSUCC

Source Section

PAGING

NPAG1GPRSTOT

Number of first page attempts over Gs interface

Data Source

MSC_IOG20_APG40

Source Field

NPAG1GPRSTOT

Source Section

PAGING

NPAG1LOTOT

first local page attempts

Data Source

MSC_IOG20_APG40

Source Field

NPAG1LOTOT

© Copyright IBM Corp. 2008, 2009. All Rights Reserved.

Source Section

PAGING

NPAG1LOUTOT

Number of first local page attempts over Iu interface

Data Source

MSC_IOG20_APG40

Source Field

NPAG1LOUTOT

Source Section

PAGING

NPAG1RESUCC

page responses to first page

Data Source

MSC_IOG20_APG40

Source Field

NPAG1RESUCC

Source Section

PAGING

NPAG1REUSUCC

Number of page responses to first page over Iu interface

Data Source

MSC_IOG20_APG40

Source Field

NPAG1REUSUCC

Source Section

PAGING

NPAG2GLTOT

repeated global page attempts

Data Source

MSC_IOG20_APG40

Source Field

NPAG2GLTOT

Source Section

PAGING

NPAG2GLUTOT

Number of repeated global page attempts over Iu interface

Data Source

MSC_IOG20_APG40

Source Field

NPAG2GLUTOT

Source Section

PAGING

NPAG2GPRSSUCC

Number of page responses to repeated page over Gs interface

Data Source

MSC_IOG20_APG40

Source Field

NPAG2GPRSSUCC

Source Section

PAGING

NPAG2GPRSTOT

Number of repeated page attempts over Gs interface

© Copyright IBM Corp. 2008, 2009. All Rights Reserved.

Data Source

MSC_IOG20_APG40

Source Field

NPAG2GPRSTOT

Source Section

PAGING

NPAG2LOTOT

repeated local page attempts

Data Source

MSC_IOG20_APG40

Source Field

NPAG2LOTOT

Source Section

PAGING

NPAG2LOUTOT

Number of repeated local page attempts over Iu interface

Data Source

MSC_IOG20_APG40

Source Field

NPAG2LOUTOT

Source Section

PAGING

NPAG2RESUCC

page responses to repeated page

Data Source

MSC_IOG20_APG40

Source Field

NPAG2RESUCC

Source Section

PAGING

NPAG2REUSUCC

Number of page responses to repeated page over Iu interface

Data Source

MSC_IOG20_APG40

Source Field

NPAG2REUSUCC

Source Section

PAGING

NPAGAREIU

Number of page responses via A-interface (NPAGARETOT) when paging is done via IU-interface in MUPAG

Data Source

MSC_IOG20_APG40

Source Field

NPAGAREIU

Source Section

PAGING

NPAGERR

Unsuccessful page responses (includes unexpected page responses)

Data Source

MSC_IOG20_APG40

© Copyright IBM Corp. 2008, 2009. All Rights Reserved.

Source Field

NPAGERR

Source Section

PAGING

NPAGGPRSFAIL

Number of paging failures over Gs interface

Data Source

MSC_IOG20_APG40

Source Field

NPAGGPRSFAIL

Source Section

PAGING

NPAGIUREA

Number of page responses via IU-interface (NPAGIURETOT) when paging is done via A-interface in MBPAG

Data Source

MSC_IOG20_APG40

Source Field

NPAGIUREA

Source Section

PAGING

NPAGSMSRES

Number of successful paging responses for SMS

Data Source

MSC_IOG20_APG40

Source Field

NPAGSMSRES

Source Section

PAGING

NPAGSMSTOT

Number of paging attempts for SMS

Data Source

MSC_IOG20_APG40

Source Field

NPAGSMSTOT

Source Section

PAGING

NPAGUERR

Number of unsuccessful page responses (includes unexpected page responses) over Iu interface

Data Source

MSC_IOG20_APG40

Source Field

NPAGUERR

Source Section

PAGING

NPBITF

Number of permanent bitfaults

Data Source

MSC_IOG20_APG40

Source Field

NPBITF

© Copyright IBM Corp. 2008, 2009. All Rights Reserved.

Source Section

CP

NPCPF

Number of permanent CP-faults

Data Source

MSC_IOG20_APG40

Source Field

NPCPF

Source Section

CP

NPERMF

Number of permanent faults in RP

Data Source

MSC_IOG20_APG40

Source Field

NPERMF

Source Section

RP

NQUERR

Number of query messages with error in data.

Data Source

MSC_IOG20_APG40

Source Field

NQUERR

Source Section

TCAPBAS

NQUREQSV

Number of query messages requesting service.

Data Source

MSC_IOG20_APG40

Source Field

NQUREQSV

Source Section

TCAPBAS

NREGNOTRSUCC

Number of successful regnot message received from HLR.

Data Source

MSC_IOG20_APG40

Source Field

NREGNOTRSUCC

Source Section

UPDLOCAT

NRELA

Number of large restarts with reload, automatically initiated.

Data Source

MSC_IOG20_APG40

Source Field

NRELA

Source Section

CP

NRELATTSUCC

Number of relocation attempts causing the UE to switch back to the old RNC

© Copyright IBM Corp. 2008, 2009. All Rights Reserved.

Data Source

MSC_IOG20_APG40

Source Field

NRELATTSUCC

Source Section

RELOC

NRELCGSSUCC

Number of switch orders to the GS triggered by relocation complete

Data Source

MSC_IOG20_APG40

Source Field

NRELCGSSUCC

Source Section

RELOC

NRELCMDTOT

Number of sent relocation commands

Data Source

MSC_IOG20_APG40

Source Field

NRELCMDTOT

Source Section

RELOC

NRELDGSSUCC

Number of switch orders to the GS triggered by relocation detect

Data Source

MSC_IOG20_APG40

Source Field

NRELDGSSUCC

Source Section

RELOC

NRELM

Number of large restarts with reload, manually initiated.

Data Source

MSC_IOG20_APG40

Source Field

NRELM

Source Section

CP

NRELRELERR

Number of relocation faults causing the MSC/VLR server to release the call

Data Source

MSC_IOG20_APG40

Source Field

NRELRELERR

Source Section

RELOC

NRELREQSUCC

Number of successful relocation requests to the target RNC

Data Source

MSC_IOG20_APG40

Source Field

NRELREQSUCC

© Copyright IBM Corp. 2008, 2009. All Rights Reserved.

Source Section

RELOC

NRELREQTOT

Number of sent relocation requests to the target RNC

Data Source

MSC_IOG20_APG40

Source Field

NRELREQTOT

Source Section

RELOC

NRELRNCSUCC

Number of successful inter-RNC relocation attempts

Data Source

MSC_IOG20_APG40

Source Field

NRELRNCSUCC

Source Section

RELOC

NRELRNCTOT

Number of inter-RNC relocation attempts

Data Source

MSC_IOG20_APG40

Source Field

NRELRNCTOT

Source Section

RELOC

NRELRQDTOT

Nr of received relocation required (excluding those received during guard time)

Data Source

MSC_IOG20_APG40

Source Field

NRELRQDTOT

Source Section

RELOC

NRELSDHSUCC

Number of successful inter-RNC relocation on signalling channel

Data Source

MSC_IOG20_APG40

Source Field

NRELSDHSUCC

Source Section

RELOC

NRELSDHTOT

Number of inter-RNC relocation attempts on signalling channel

Data Source

MSC_IOG20_APG40

Source Field

NRELSDHTOT

Source Section

RELOC

NREQTERM

Number of request for termination messages sent.

© Copyright IBM Corp. 2008, 2009. All Rights Reserved.

Data Source

MSC_IOG20_APG40

Source Field

NREQTERM

Source Section

TCAPBAS

NRESETRECEIVED

Number of received Reset messages

Data Source

MSC_IOG20_APG40

Source Field

NRESETRECEIVED

Source Section

GPRSGS

NRESETSENT

Number of sent Reset messages

Data Source

MSC_IOG20_APG40

Source Field

NRESETSENT

Source Section

GPRSGS

NRNTLRCTOT

Number of Location Reporting Control messages sent

Data Source

MSC_IOG20_APG40

Source Field

NRNTLRCTOT

Source Section

UMTSPOS

NRNTLRDRTOT

Number or Location Related Data Request messages sent.

Data Source

MSC_IOG20_APG40

Source Field

NRNTLRDRTOT

Source Section

UMTSPOS

NRNTLRDSUCC

Number of Location Related Data Response messages received.

Data Source

MSC_IOG20_APG40

Source Field

NRNTLRDSUCC

Source Section

UMTSPOS

NRNTLRSUCC

Nr of Location Report messages containing geographical co-ordinates received

Data Source

MSC_IOG20_APG40

Source Field

NRNTLRSUCC

© Copyright IBM Corp. 2008, 2009. All Rights Reserved.

Source Section

UMTSPOS

NRP

Number of RP's

Data Source

MSC_IOG20_APG40

Source Field

NRP

Source Section

RP

NRSITAATOT

Nr of mobile initiated interrogations for a tariff area applied to a call

Data Source

MSC_IOG20_APG40

Source Field

NRSITAATOT

Source Section

REGSERVICE

NRSITARTOT

Nr of mobile interr for a tariff area to the current location for subs

Data Source

MSC_IOG20_APG40

Source Field

NRSITARTOT

Source Section

REGSERVICE

NRSOCLOERR

Number of originating call attempts rejected due to local subscription

Data Source

MSC_IOG20_APG40

Source Field

NRSOCLOERR

Source Section

REGSERVICE

NRSOCLOTOT

Number of originating call attempts within local subscription area

Data Source

MSC_IOG20_APG40

Source Field

NRSOCLOTOT

Source Section

REGSERVICE

NRSOCTATOT

Number of originating call attempts for subscription with tariff areas

Data Source

MSC_IOG20_APG40

Source Field

NRSOCTATOT

Source Section

REGSERVICE

© Copyright IBM Corp. 2008, 2009. All Rights Reserved.

NRSPNRCV

Number of response messages not received within expected time period, SCP TA timer expired for caller interaction

Data Source

MSC_IOG20_APG40

Source Field

NRSPNRCV

Source Section

TCAPBAS

NRSPROUT

Number of response messages sent with routing instructions.

Data Source

MSC_IOG20_APG40

Source Field

NRSPROUT

Source Section

TCAPBAS

NRSTCLOERR

Number of terminating call attempts rejected due to local subscription

Data Source

MSC_IOG20_APG40

Source Field

NRSTCLOERR

Source Section

REGSERVICE

NRSTCLOTOT

Number of terminating call attempts within local subscription area

Data Source

MSC_IOG20_APG40

Source Field

NRSTCLOTOT

Source Section

REGSERVICE

NRSTCTATOT

Number of terminating call attempts for subscription with tariff areas

Data Source

MSC_IOG20_APG40

Source Field

NRSTCTATOT

Source Section

REGSERVICE

NSCAN

Accumulations

Data Source

MSC_IOG20_APG40

Source Field

NSCAN

Source Section

LOAS

NSCAN_GRPSWITCH

Number of accumulations.

© Copyright IBM Corp. 2008, 2009. All Rights Reserved.

Data Source

MSC_IOG20_APG40

Source Field

NSCAN

Source Section

GRPSWITCH

NSECFRRNSCC

Number of successfully received Security Mode Complete messages

Data Source

MSC_IOG20_APG40

Source Field

NSECFRRNSCC

Source Section

UMTSSEC

NSECTORNTOT

Total Number of sent Security Mode Command messages

Data Source

MSC_IOG20_APG40

Source Field

NSECTORNTOT

Source Section

UMTSSEC

NSEPINCTER

Number of NS/EP call received on incoming trunks whose destination is an MS served by this MSC.

Data Source

BSC_IOG20_APG40

Source Field

NSEPINCTER

NSEPISUC

Number of NS/EP calls with an established signaling link to the succeeding IXC exchange.

Data Source

BSC_IOG20_APG40

Source Field

NSEPISUC

NSEPIUNS

Number of unsuccessful NS/EP calls to an IXC, not possible to be routed out of the exchange on an o/g trunk.

Data Source

BSC_IOG20_APG40

Source Field

NSEPIUNS

NSEPOUT

Number of outgoing NS/EP calls that require a trunk.

Data Source

BSC_IOG20_APG40

Source Field

NSEPOUT

NSEPPCALL

Number of NS/EP calls for which polling for a MGW is done.

© Copyright IBM Corp. 2008, 2009. All Rights Reserved.

Data Source

MSC_IOG20_APG40

Source Field

NSEPPCALL

Source Section

NSEPCALL

NSEPPFREL

Number of NS/EP calls for which attempts to select a MGW have been abandoned due to a forward release indication during polling.

Data Source

MSC_IOG20_APG40

Source Field

NSEPPFREL

Source Section

NSEPCALL

NSEPPTOUT

Number of times the polling timer has expired for NS/EP calls.

Data Source

MSC_IOG20_APG40

Source Field

NSEPPTOUT

Source Section

NSEPCALL

NSEPQCALL

Number of NS/EP calls that have been queued.

Data Source

BSC_IOG20_APG40

Source Field

NSEPQCALL

NSEPQFREL

Number of queued NS/EP calls released due to a forward release.

Data Source

BSC_IOG20_APG40

Source Field

NSEPQFREL

NSEPQOVFL

Total number of times that NS/EP calls fail to queue because the maximum queue length has been reached.

Data Source

BSC_IOG20_APG40

Source Field

NSEPQOVFL

NSEPQTOUT

Total number of times that NS/EP calls are removed from a trunk queue due to queue timer expiry.

Data Source

BSC_IOG20_APG40

Source Field

NSEPQTOUT

NSEPSUCSIG

Number of NS/EP calls with an established signaling link to the succeeding exchange.

© Copyright IBM Corp. 2008, 2009. All Rights Reserved.

Data Source

BSC_IOG20_APG40

Source Field

NSEPSUCSIG

NSEPUNSUCC

Number of unsuccessful NS/EP calls, not possible to be routed out of the exchange on an o/g trunk.

Data Source

BSC_IOG20_APG40

Source Field

NSEPUNSUCC

NSMLA

Number of small restarts automatically initiated.

Data Source

MSC_IOG20_APG40

Source Field

NSMLA

Source Section

CP

NSMLM

Number of small restarts manually initiated.

Data Source

MSC_IOG20_APG40

Source Field

NSMLM

Source Section

CP

NSMSCAOSUCC

Number of successful mobile-originated short messages transferred on the short message relay layer from MSs in the MSC

Data Source

MSC_IOG20_APG40

Source Field

NSMSCAOSUCC

Source Section

SHMSGSERV

NSMSCDOTOT

Number of received mobile-originated short messages on the short message relay layer from MSs in the MSC

Data Source

MSC_IOG20_APG40

Source Field

NSMSCDOTOT

Source Section

SHMSGSERV

NSMSCMRSUCC

Number of successful mobile-terminated short messages transferred on the connection management (CM) layer towards MSs in the MSC

Data Source

MSC_IOG20_APG40

Source Field

NSMSCMRSUCC

© Copyright IBM Corp. 2008, 2009. All Rights Reserved.

Source Section

SHMSGSERV

NSMSCMTOT

Number of mobile-terminated short messages sent on the CM layer towards MSs in the MSC

Data Source

MSC_IOG20_APG40

Source Field

NSMSCMTOT

Source Section

SHMSGSERV

NSMSDBRS

Number of MO-SMS redirections to a new SC Address due to destination based routing.

Data Source

MSC_IOG20_APG40

Source Field

NSMSDBRS

Source Section

SHMSGSERV

NSMSFAIL

Number of MO SMS failures due to rejection from the CAMEL feature

Data Source

MSC_IOG20_APG40

Source Field

NSMSFAIL

Source Section

SHAM

NSMSINV

Number of invocations of access CAMEL service for MO SMS

Data Source

MSC_IOG20_APG40

Source Field

NSMSINV

Source Section

SHAM

NSMSMARTOT

Number of requests for short message memory available from MSs received in MSC

Data Source

MSC_IOG20_APG40

Source Field

NSMSMARTOT

Source Section

SHMSGSERV

NSMSNRFSMTOT

Number of not accepted MAP version 2 operation Ready for SM towards HLR with alert reason 'Memory Available'

Data Source

MSC_IOG20_APG40

Source Field

NSMSNRFSMTOT

Source Section

SHMSGSERV

© Copyright IBM Corp. 2008, 2009. All Rights Reserved.

NSMSNRFSMTOT3

Number of not accepted MAP V3 operation ReadyForSM to HLR

Data Source

MSC_IOG20_APG40

Source Field

NSMSNRFSMTOT3

Source Section

SHMSGSERV

NSMSRAOSUCC

Number of successful mobile-originated short messages transferred on the connection management layer from MSs in the MSC

Data Source

MSC_IOG20_APG40

Source Field

NSMSRAOSUCC

Source Section

SHMSGSERV

NSMSRDOTOT

Number of requests for mobile-originated short messages from MSs received in the MSC

Data Source

MSC_IOG20_APG40

Source Field

NSMSRDOTOT

Source Section

SHMSGSERV

NSMSRDTOT2

Number of requests for originating short message deliveries from an MS. The counter is incremented when MSC receives CM Service Request sent by BS of idle subscribers indicating it is a SMS MO service message, or MSC receives ADDS Transfer message that BS

Data Source

MSC_IOG20_APG40

Source Field

NSMSRDTOT2

Source Section

SHMSGSERV

NSMSSMRLTOT

Number of requests for mobile-terminated short messages towards MSs received in the MSC

Data Source

MSC_IOG20_APG40

Source Field

NSMSSMRLTOT

Source Section

SHMSGSERV

NSMSSRSUCC

Number of successful mobile-terminated short messages transferred on the short message relay layer towards MSs in the MSC

Data Source

MSC_IOG20_APG40

Source Field

NSMSSRSUCC

Source Section

SHMSGSERV

© Copyright IBM Corp. 2008, 2009. All Rights Reserved.

NSPFAXSW1SUCC

Nr of succ alternate speech or fax calls switch from one mode to alternate mode

Data Source

MSC_IOG20_APG40

Source Field

NSPFAXSW1SUCC

Source Section

ALTSERVICE

NSPFAXSW1TOT

Nr of attempts to switch alternate speech or fax call

Data Source

MSC_IOG20_APG40

Source Field

NSPFAXSW1TOT

Source Section

ALTSERVICE

NSPM

Number of SPMs.

Data Source

MSC_IOG20_APG40

Source Field

NSPM

Source Section

GRPSWITCH

NSUCCLIWFBYPASS

Number of successful call attempts requiring "Bypassing of the local IWF for internet calls"

Data Source

MSC_IOG20_APG40

Source Field

NSUCCLIWFBYPASS

Source Section

OPTFEAT

NTATTMPT

Number of outgoing NS/EP calls that require a trunk.

Data Source

MSC_IOG20_APG40

Source Field

NTATTMPT

Source Section

NSEPCALL

NTBITF

Number of temporary bitfaults

Data Source

MSC_IOG20_APG40

Source Field

NTBITF

Source Section

CP

NTBRSMS

Number of Broadcast message attempted successfully from Message Centre

Data Source

MSC_IOG20_APG40

© Copyright IBM Corp. 2008, 2009. All Rights Reserved.

Source Field

NTBRSMS

Source Section

SHMSGSERV

NTBRSMSFAIL

Number of Unsuccessful Broadcast processed

Data Source

MSC_IOG20_APG40

Source Field

NTBRSMSFAIL

Source Section

SHMSGSERV

NTCISTALG

Number of terminated call activities due to reception of MAP IST Alert Response operation in GMSC.

Data Source

BSC_IOG20_APG40

Source Field

NTCISTALG

NTCISTALM

Number of terminated call activities due to reception of MAP IST Alert Response operation in MSC.

Data Source

BSC_IOG20_APG40

Source Field

NTCISTALM

NTCISTCOM

Number of terminated call activities due to reception of MAP IST Command operation in MSC and GMSC.

Data Source

BSC_IOG20_APG40

Source Field

NTCISTCOM

NTCPF

Number of temporary CP-faults

Data Source

MSC_IOG20_APG40

Source Field

NTCPF

Source Section

CP

NTEMPF

Number of temporary faults in RP

Data Source

MSC_IOG20_APG40

Source Field

NTEMPF

Source Section

RP

NTERM

Number of MT NS/EP calls.

© Copyright IBM Corp. 2008, 2009. All Rights Reserved.

Data Source

MSC_IOG20_APG40

Source Field

NTERM

Source Section

NSEPCALL

NTERSMSUCC

Number of successful mobile-terminated short messages in the SMS-GMSC

Data Source

MSC_IOG20_APG40

Source Field

NTERSMSUCC

Source Section

SMSGMSC

NTERSMTOT

Number of mobile-terminated short messages in the SMS-GMSC

Data Source

MSC_IOG20_APG40

Source Field

NTERSMTOT

Source Section

SMSGMSC

NTOTLIWFBYPASS

Number of call attempts requiring "Bypassing of the local IWF for Internet calls"

Data Source

MSC_IOG20_APG40

Source Field

NTOTLIWFBYPASS

Source Section

OPTFEAT

NTQABAND

Number of queued NS/EP calls released due to a forward release.

Data Source

MSC_IOG20_APG40

Source Field

NTQABAND

Source Section

NSEPCALL

NTQOVFL

Total number of times that NS/EP calls fail to queue because the maximum queue length has been reached.

Data Source

MSC_IOG20_APG40

Source Field

NTQOVFL

Source Section

NSEPCALL

NTQQEUD

Number of NS/EP calls that have been queued.

Data Source

MSC_IOG20_APG40

© Copyright IBM Corp. 2008, 2009. All Rights Reserved.

Source Field

NTQQEUD

Source Section

NSEPCALL

NTQTOUT

Total number of times that NS/EP calls are removed from a trunk queue due to queue timer expiry.

Data Source

MSC_IOG20_APG40

Source Field

NTQTOUT

Source Section

NSEPCALL

NTRMER

Number of termination messages received with errors indicated.

Data Source

MSC_IOG20_APG40

Source Field

NTRMER

Source Section

TCAPBAS

NTRMERAB

Number of termination messages received with errors indicating caller abandon.

Data Source

MSC_IOG20_APG40

Source Field

NTRMERAB

Source Section

TCAPBAS

NTRMERSSP

Number of termination messages received with errors indicating SSP failure.

Data Source

MSC_IOG20_APG40

Source Field

NTRMERSSP

Source Section

TCAPBAS

NTRMNRCV

Number of termination messages not received within expected time period.

Data Source

MSC_IOG20_APG40

Source Field

NTRMNRCV

Source Section

TCAPBAS

NTRMRCV

Number of termination messages received.

Data Source

MSC_IOG20_APG40

Source Field

NTRMRCV

© Copyright IBM Corp. 2008, 2009. All Rights Reserved.

Source Section

TCAPBAS

NTSM

Number of TSMs.

Data Source

MSC_IOG20_APG40

Source Field

NTSM

Source Section

GRPSWITCH

NUGHNDATTSUCC

Nr of UMTS to GSM ho attempts causing the MS to switch back to old traffic ch

Data Source

MSC_IOG20_APG40

Source Field

NUGHNDATTSUCC

Source Section

UGHNDOVER

NUGHNDCGSSUCC

Nr of GS-operations triggered by ho complete during UMTS to GSM ho

Data Source

MSC_IOG20_APG40

Source Field

NUGHNDCGSSUCC

Source Section

UGHNDOVER

NUGHNDCMDTOT

Number of sent relocation commands during UMTS to GSM handover

Data Source

MSC_IOG20_APG40

Source Field

NUGHNDCMDTOT

Source Section

UGHNDOVER

NUGHNDDGSSUCC

Nr of GS-operations triggered by ho detect during UMTS to GSM ho

Data Source

MSC_IOG20_APG40

Source Field

NUGHNDDGSSUCC

Source Section

UGHNDOVER

NUGHNDRELERR

Nr of UMTS to GSM ho faults causing the MSC/VLR server to release the call

Data Source

MSC_IOG20_APG40

Source Field

NUGHNDRELERR

Source Section

UGHNDOVER

NUGHNDRELREQSUCC

Number of successful UMTS to GSM handover requests to the target BSC

© Copyright IBM Corp. 2008, 2009. All Rights Reserved.

Data Source

MSC_IOG20_APG40

Source Field

NUGHNDRELREQSUCC

Source Section

UGHNDOVER

NUGHNDRELREQTOT

Number of sent UMTS to GSM handover requests to the target BSC

Data Source

MSC_IOG20_APG40

Source Field

NUGHNDRELREQTOT

Source Section

UGHNDOVER

NUGHNDRRQDTOT

Nr of rec relocation req excl those rec during guard time for UMTS to GSM ho

Data Source

MSC_IOG20_APG40

Source Field

NUGHNDRRQDTOT

Source Section

UGHNDOVER

NUGHNDSDSUCC

Number of successful handovers from RNC to BSC on SDCCH

Data Source

MSC_IOG20_APG40

Source Field

NUGHNDSDSUCC

Source Section

UGHNDOVER

NUGHNDSDTOT

Number of handover attempts from RNC to BSC on SDCCH

Data Source

MSC_IOG20_APG40

Source Field

NUGHNDSTTOT

Source Section

UGHNDOVER

NUGHNDSTSUCC

Number of successful handovers from signalling channel to traffic channel

Data Source

MSC_IOG20_APG40

Source Field

NUGHNDSTSUCC

Source Section

UGHNDOVER

NUGHNDSTTOT

Number of handover attempt from signalling channel to traffic channel

Data Source

MSC_IOG20_APG40

Source Field

NUGHNDSDTOT

© Copyright IBM Corp. 2008, 2009. All Rights Reserved.

Source Section

UGHNDOVER

NUGHRNCBSCSUCC

Number of successful handovers from RNC to BSC

Data Source

MSC_IOG20_APG40

Source Field

NUGHRNCBSCSUCC

Source Section

UGHNDOVER

NUGHRNCBSCTOT

Number of handover attempts from RNC to BSC

Data Source

MSC_IOG20_APG40

Source Field

NUGHRNCBSCTOT

Source Section

UGHNDOVER

NVACANN

Number of vacant code announcement responses sent because of feature logic error.

Data Source

MSC_IOG20_APG40

Source Field

NVACANN

Source Section

TCAPBAS

OCTRETRN

Number of octets retransmitted

Data Source

MSC_IOG20_APG40

Source Field

OCTRETRN

Source Section

SS7TOTAL

OMMSU

Number of originating management MSU's

Data Source

MSC_IOG20_APG40

Source Field

OMMSU

Source Section

SS7TOTAL

OMSIF

Number of originating management MSU octets

Data Source

MSC_IOG20_APG40

Source Field

OMSIF

Source Section

SS7TOTAL

ORGETSTOT

Number of MO GETS call requests.

© Copyright IBM Corp. 2008, 2009. All Rights Reserved.

Data Source

BSC_IOG20_APG40

Source Field

ORGETSTOT

ORWPSSUCC

Number of successful MO WPS calls after successful TCH assignment.

Data Source

BSC_IOG20_APG40

Source Field

ORWPSSUCC

ORWPSTOT

Number of MO WPS call requests.

Data Source

BSC_IOG20_APG40

Source Field

ORWPSTOT

OUMSU

Number of originating SCCP/UP MSU's

Data Source

MSC_IOG20_APG40

Source Field

OUMSU

Source Section

SS7TOTAL

OUSIF

Number of originating SCCP/UP MSU octets

Data Source

MSC_IOG20_APG40

Source Field

OUSIF

Source Section

SS7TOTAL

P95FPHGT

Number of sampled translated MSUs failing normal-load 95% test for CP handling time

Data Source

MSC_IOG20_APG40

Source Field

P95FPHGT

Source Section

SS7TOTAL

P95FPHNT

Number of sampled non-translated MSUs failing normal-load 95% test for CP handling time.

Data Source

MSC_IOG20_APG40

Source Field

P95FPHNT

Source Section

SS7TOTAL

PAIRABLOL

Number of pair of RP's in blocking state,aut. blocked.

Data Source

MSC_IOG20_APG40

© Copyright IBM Corp. 2008, 2009. All Rights Reserved.

Source Field

PAIRABLOL

Source Section

RP

PAIRABLOL1

Number of RP's, in an RP-pair, in blocking state,aut blocked.

Data Source

MSC_IOG20_APG40

Source Field

PAIRABLOL1

Source Section

RP

PAIRMBLOL

Number of pair of RP's in blocking state,man. blocked.

Data Source

MSC_IOG20_APG40

Source Field

PAIRMBLOL

Source Section

RP

PAIRMBLOL1

Number of RP's, in an RP-pair, in blocking state,man blocked.

Data Source

MSC_IOG20_APG40

Source Field

PAIRMBLOL1

Source Section

RP

PERLEN

Period Length

PERLEN_TRAR

Period Length (of TRAR data)

PERLEN_TRART

Period Length (of TRAR data)

RFNETCONG

Counter for routing failure, network congestion

Data Source

MSC_IOG20_APG40

Source Field

RFNETCONG

Source Section

C7SCPERF

RFNETFAIL

Counter for routing failure, network failure (MTP or SCCP failure)

Data Source

MSC_IOG20_APG40

Source Field

RFNETFAIL

Source Section

C7SCPERF

RFSPADDR

Counter for routing failure, no translation for this specific address

© Copyright IBM Corp. 2008, 2009. All Rights Reserved.

Data Source

MSC_IOG20_APG40

Source Field

RFSPADDR

Source Section

C7SCPERF

RFSSNFAIL

Counter for routing failure, subsystem failure

Data Source

MSC_IOG20_APG40

Source Field

RFSSNFAIL

Source Section

C7SCPERF

RFSUADDR

Counter for routing failure, no translation for address of such nature

Data Source

MSC_IOG20_APG40

Source Field

RFSUADDR

Source Section

C7SCPERF

RFUNEQUIP

Counter for routing failure, unequipped user

Data Source

MSC_IOG20_APG40

Source Field

RFUNEQUIP

Source Section

C7SCPERF

RFUNQUAL

Counter for routing failure, reason unqualified

Data Source

MSC_IOG20_APG40

Source Field

RFUNQUAL

Source Section

C7SCPERF

SAMPPHGT

Number of MSUs requiring GTT, sampled for CP handling time

Data Source

MSC_IOG20_APG40

Source Field

SAMPPHGT

Source Section

SS7TOTAL

SAMPPHNT

Number of MSUs not requiring GTT, sampled for CP handling time.

Data Source

MSC_IOG20_APG40

Source Field

SAMPPHNT

© Copyright IBM Corp. 2008, 2009. All Rights Reserved.

Source Section

SS7TOTAL

SCANCNTBLO

Number of scannings for blocking counters

Data Source

MSC_TRART

Source Field

SCANCNTBLO

Source Section

ASC_TRART

SCANCNTTRAFF

Number of scannings for level counters

Data Source

MSC_TRART

Source Field

SCANCNTTRAFF

Source Section

ASC_TRART

SFREQ

Number of service requests that are checked for Service Filtering

Data Source

MSC_IOG20_APG40

Source Field

SFREQ

Source Section

SHAM

SIZEDS

Memory size of data store

Data Source

MSC_IOG20_APG40

Source Field

SIZEDS

Source Section

CP

SIZEPS

Memory size of program store/main store

Data Source

MSC_IOG20_APG40

Source Field

SIZEPS

Source Section

CP

SIZERS

Memory size of reference store

Data Source

MSC_IOG20_APG40

Source Field

SIZERS

Source Section

CP

© Copyright IBM Corp. 2008, 2009. All Rights Reserved.

SRFATT

Access attempts or seizure attempts. Total number of times an attempt is made to seize a SRF individual (including failed attempts).

Data Source

MSC_IOG20_APG40

Source Field

SRFATT

Source Section

SHAM

SRFCNG

Number of times an attempted seizure of a SRF individual fails

Data Source

MSC_IOG20_APG40

Source Field

SRFCNG

Source Section

SHAM

SRFTRF

Number of SRF individuals seized or "occupied" at a given instant (instantaneous traffic level)

Data Source

MSC_IOG20_APG40

Source Field

SRFTRF

Source Section

SHAM

SYERROR

Counter for syntax error detected

Data Source

MSC_IOG20_APG40

Source Field

SYERROR

Source Section

C7SCPERF

TIMEETC

Number of unsuccessful ETC Control connections. Timeout (Tetc) of SRF sanity timer

Data Source

MSC_IOG20_APG40

Source Field

TIMEETC

Source Section

SHAM

TIMEPHGT

Accumulated total of CP handling time for sampled GTT MSUs in ms

Data Source

MSC_IOG20_APG40

Source Field

TIMEPHGT

Source Section

SS7TOTAL

TIMEPHNT

Accumulated total of CP handling time for sampled non-translated MSUs in ms.

© Copyright IBM Corp. 2008, 2009. All Rights Reserved.

Data Source

MSC_IOG20_APG40

Source Field

TIMEPHNT

Source Section

SS7TOTAL

TIMESRF

Number of unsuccessful SRF Control connections. Timeout (Tsrf) of SRF sanity timer

Data Source

MSC_IOG20_APG40

Source Field

TIMESRF

Source Section

SHAM

TMMSU

Number of terminating management MSU's

Data Source

MSC_IOG20_APG40

Source Field

TMMSU

Source Section

SS7TOTAL

TMSIF

Number of terminating management SIF octets

Data Source

MSC_IOG20_APG40

Source Field

TMSIF

Source Section

SS7TOTAL

TNSEPSUCC

Number of MT NS/EP calls after successful TCH.

Data Source

BSC_IOG20_APG40

Source Field

TNSEPSUCC

TNSEPTOT

Number of MT NS/EP calls.

Data Source

BSC_IOG20_APG40

Source Field

TNSEPTOT

TOTSCBUF1

Total number of simultaneous buffers of 256 octet length

Data Source

MSC_IOG20_APG40

Source Field

TOTSCBUF1

Source Section

C7SCCPUSE

TOTSCBUF2

Total number of simultaneous buffers of 512 octet length

© Copyright IBM Corp. 2008, 2009. All Rights Reserved.

Data Source

MSC_IOG20_APG40

Source Field

TOTSCBUF2

Source Section

C7SCCPUSE

TOTSCBUF3

Total number of simultaneous buffers of 1024 octet length

Data Source

MSC_IOG20_APG40

Source Field

TOTSCBUF3

Source Section

C7SCCPUSE

TOTSCBUF4

Total number of simultaneous buffers of 2048 octet length

Data Source

MSC_IOG20_APG40

Source Field

TOTSCBUF4

Source Section

C7SCCPUSE

TOTTCBUFF

Total number of simultaneous TCAP buffers

Data Source

MSC_IOG20_APG40

Source Field

TOTTCBUFF

Source Section

TCUSE

TOTTCDIA

Total number of simultaneous TC dialogue individuals

Data Source

MSC_IOG20_APG40

Source Field

TOTTCDIA

Source Section

TCUSE

TOTTCOP

Total number of simultaneous TC operations

Data Source

MSC_IOG20_APG40

Source Field

TOTTCOP

Source Section

TCUSE

TUMSU

Number of terminating SCCP/UP MSU's

Data Source

MSC_IOG20_APG40

Source Field

TUMSU

© Copyright IBM Corp. 2008, 2009. All Rights Reserved.

Source Section

SS7TOTAL

TUSIF

Number of terminating SCCP/UP SIF octets

Data Source

MSC_IOG20_APG40

Source Field

TUSIF

Source Section

SS7TOTAL

UDTREC

Counter for UDT messages received from MTP

Data Source

MSC_IOG20_APG40

Source Field

UDTREC

Source Section

C7SCQOS

UDTSENT

Counter for UDT messages sent to MTP

Data Source

MSC_IOG20_APG40

Source Field

UDTSENT

Source Section

C7SCQOS

UDTSREC

Counter for UDTS messages received from MTP

Data Source

MSC_IOG20_APG40

Source Field

UDTSREC

Source Section

C7SCQOS

UDTSSENT

Counter for UDTS messages sent to MTP

Data Source

MSC_IOG20_APG40

Source Field

UDTSSENT

Source Section

C7SCQOS

WASSIGND

Number of successful MO WPS calls after successful TCH assignment.

Data Source

MSC_IOG20_APG40

Source Field

WASSIGND

Source Section

NSEPCALL

WINVOKED

Number of MO WPS call requests.

© Copyright IBM Corp. 2008, 2009. All Rights Reserved.

Data Source

MSC_IOG20_APG40

Source Field

WINVOKED

Source Section

NSEPCALL

XUDTREC

Counter for XUDT messages received from MTP

Data Source

MSC_IOG20_APG40

Source Field

XUDTREC

Source Section

C7SCQOS

XUDTSENT

Counter for XUDT messages sent to MTP

Data Source

MSC_IOG20_APG40

Source Field

XUDTSENT

Source Section

C7SCQOS

XUDTSREC

Counter for XUDTS messages received from MTP

Data Source

MSC_IOG20_APG40

Source Field

XUDTSREC

Source Section

C7SCQOS

XUDTSSENT

Counter for XUDTS messages sent to MTP

Data Source

MSC_IOG20_APG40

Source Field

XUDTSSENT

Source Section

C7SCQOS

MSC_SS7Dest Primitive Calculations

The following is a list of primitive calculations for the MSC_SS7Dest entity.

GRAPHmultiLineSeparator

Special Control Field for Multi-Line Graphs

Calculation

```
""
```

INTERVALS

Number of 60 minute intervals covered

Calculation

```
PERLEN / (1.0 * 60)
```

LocalName

MSC_C7Dest Name

Calculation

```
LocalKey
```

© Copyright IBM Corp. 2008, 2009. All Rights Reserved.

NUMDAYS

of days in Report

Calculation

```
DAYSINREPORT()
```

NUMHOURS

of hours in Summation Data

Calculation

VENDORTECH

Vendor Technology

Calculation

```
isNull( PERLEN ) ? nullString() : "EricssonGSM"
```

MSC_SS7Dest Peg Counts

The following is a list of peg counts for the MSC_SS7Dest entity.

MSC_RELEASE

Release

MSGSND

Counter for messages sent to a back-up node

Data Source

MSC_IOG20_APG40

Source Field

MSGSND

Source Section

C7SCSIGP

PERLEN

Period Length

SYS7IND_MSC_C7SCSIGP

State

Data Source

MSC_IOG20_APG40

Source Field

SYS7IND

Source Section

C7SCSIGP

MSC_SS7HSLPrmGrp Primitive Calculations

The following is a list of primitive calculations for the MSC_SS7HSLPrmGrp entity.

GRAPHmultiLineSeparator

Special Control Field for Multi-Line Graphs

Calculation

```
""
```

LocalName

MSC_SS7HSLPrmGrp Name

Calculation

```
LocalKey
```

NUMDAYS

of days in Report

Calculation

```
DAYSINREPORT()
```

NUMHOURS

of hours in Summation Data

Calculation

© Copyright IBM Corp. 2008, 2009. All Rights Reserved.

VENDORTECH

Vendor Tech

Calculation

```
isNull( PERLEN ) ? nullString() : "EricssonGSM"
```

MSC_SS7HSLPrmGrp Peg Counts

The following is a list of peg counts for the MSC_SS7HSLPrmGrp entity.

AERMM

AERM parameter M.

Data Source

MSC_IOG20_APG40

Source Field

AERMM

Source Section

SS7PRGRP

AERMN

AERM parameter N in octets.

Data Source

MSC_IOG20_APG40

Source Field

AERMN

Source Section

SS7PRGRP

AERMTIE

AERM parameter Tie.

Data Source

MSC_IOG20_APG40

Source Field

AERMTIE

Source Section

SS7PRGRP

AERMTIN

AERM parameter Tin.

Data Source

MSC_IOG20_APG40

Source Field

AERMTIN

Source Section

SS7PRGRP

ALPHA

A (alpha), exponential smoothing factor

Data Source

MSC_IOG20_APG40

Source Field

ALPHA

Source Section

SS7HSLPG1

CNGABTH1

Value of congestion abatement for level 1, CNGABTH1 = (number of octets in TR/RTB buffer when level 1 is reached / 1000)

Data Source

MSC_IOG20_APG40

© Copyright IBM Corp. 2008, 2009. All Rights Reserved.

Source Field

CNGABTH1

Source Section

SS7HSLPG2

CNGABTH2

Value of congestion abatement for level 2, CNGABTH2 = (number of octets in TR/RTB buffer when level 2 is reached / 1000)

Data Source

MSC_IOG20_APG40

Source Field

CNGABTH2

Source Section

SS7HSLPG2

CNGABTH3

Value of congestion abatement for level 3, CNGABTH3 = (number of octets in TR/RTB buffer when level 3 is reached / 1000)

Data Source

MSC_IOG20_APG40

Source Field

CNGABTH3

Source Section

SS7HSLPG2

CNGDITH1

Value of congestion discard for level 1, CNGDITH1 = (number of octets in TR/RTB buffer when level 1 is reached / 1000)

Data Source

MSC_IOG20_APG40

Source Field

CNGDITH1

Source Section

SS7HSLPG2

CNGDITH2

Value of congestion discard for level 2, CNGDITH2 = (number of octets in TR/RTB buffer when level 2 is reached / 1000)

Data Source

MSC_IOG20_APG40

Source Field

CNGDITH2

Source Section

SS7HSLPG2

CNGDITH3

Value of congestion discard for level 3, CNGDITH3 = (number of octets in TR/RTB buffer when level 3 is reached / 1000)

Data Source

MSC_IOG20_APG40

Source Field

CNGDITH3

Source Section

SS7HSLPG2

CNGONTH1

Value of congestion onset for level 1, CNGONTH1 = (number of octets in TB/RTB buffer when level 1 is reached / 1000).

Data Source

MSC_IOG20_APG40

© Copyright IBM Corp. 2008, 2009. All Rights Reserved.

Source Field

CNGONTH1

Source Section

SS7HSLPG2

CNGONTH2

Value of congestion onset for level 2, CNGONTH2 = (number of octets in TB/RTB buffer when level 2 is reached / 1000).

Data Source

MSC_IOG20_APG40

Source Field

CNGONTH2

Source Section

SS7HSLPG2

CNGONTH3

Value of congestion onset for level 3, CNGONTH3 = (number of octets in TB/RTB buffer when level 3 is reached / 1000)

Data Source

MSC_IOG20_APG40

Source Field

CNGONTH3

Source Section

SS7HSLPG2

ERRCORR

correction method

Data Source

MSC_IOG20_APG40

Source Field

ERRCORR

Source Section

SS7PRGRP

HLR_RELEASE

MSC Release

LT1ALNRD

T1.111.3 T1 Timer, "aligned/ready" in 50 ms units.

Data Source

MSC_IOG20_APG40

Source Field

LT1ALNRD

Source Section

SS7PRGRP

LT1UNACK

Timer_CC, time between transmission of unacknowledged BGN, END, ER, or RS PDUs

Data Source

MSC_IOG20_APG40

Source Field

LT1UNACK

Source Section

SS7HSLPG1

LT2NOALN

T1.111.3 T2 Timer, "not aligned" in 50 ms units.

Data Source

MSC_IOG20_APG40

© Copyright IBM Corp. 2008, 2009. All Rights Reserved.

Source Field

LT2NOALN

Source Section

SS7PRGRP

LT3ALIND

T1.111.3 T3 Timer, "aligned" in 50 msunits.

Data Source

MSC_IOG20_APG40

Source Field

LT3ALIND

Source Section

SS7PRGRP

LT4EMGPV

T1.111.3 T4 Timer, emergency proving period timer in 50 ms units.

Data Source

MSC_IOG20_APG40

Source Field

LT4EMGPV

Source Section

SS7PRGRP

LT4NMLPV

T1.111.3 T4 Timer, normal proving period timer in 50 ms units.

Data Source

MSC_IOG20_APG40

Source Field

LT4NMLPV

Source Section

SS7PRGRP

LT5DSIB

T1.111.3 T5 Timer, "sending SIB" in 50 ms units.

Data Source

MSC_IOG20_APG40

Source Field

LT5DSIB

Source Section

SS7PRGRP

LT6RMCNG

T1.111.3 T6 Timer, "remotecongestion" in 50 ms units.

Data Source

MSC_IOG20_APG40

Source Field

LT6RMCNG

Source Section

SS7PRGRP

LT7XDLAK

T1.111.3 T7 Timer, "excessive delay of acknowledgement" in 50 ms units.

Data Source

MSC_IOG20_APG40

Source Field

LT7XDLAK

Source Section

SS7PRGRP

© Copyright IBM Corp. 2008, 2009. All Rights Reserved.

LTBLCKSZ

T_sup, superblock size

Data Source

MSC_IOG20_APG40

Source Field

LTBLCKSZ

Source Section

SS7HSLPG1

LTFORPRV

Timer_FORCE-PROVING, force proving

Data Source

MSC_IOG20_APG40

Source Field

LTFORPRV

Source Section

SS7HSLPG1

LTKPALIV

Timer_KEEP-ALIVE, "keep alive" for 3622 cells/sec signalling rate

Data Source

MSC_IOG20_APG40

Source Field

LTKPALIV

Source Section

SS7HSLPG1

LTMAXPDU

Timer_NO-RESPONSE, maximum time interval during which at least one STAT PDU must be received

Data Source

MSC_IOG20_APG40

Source Field

LTMAXPDU

Source Section

SS7HSLPG1

LTMXIDLE

Timer_IDLE, maximum time of the IDLE phase of an SSCOP connection

Data Source

MSC_IOG20_APG40

Source Field

LTMXIDLE

Source Section

SS7HSLPG1

LTNOCRED

Timer_NO-CREDIT, maximum interval without credit

Data Source

MSC_IOG20_APG40

Source Field

LTNOCRED

Source Section

SS7HSLPG1

© Copyright IBM Corp. 2008, 2009. All Rights Reserved.

LTPRVPDU

Timer_T3, time between proving PDUs in 1ms

Data Source

MSC_IOG20_APG40

Source Field

LTPRVPDU

Source Section

SS7HSLPG1

LTPULLRT

Timer_POLL, "Poll" for 3622 cells/sec signalling rate

Data Source

MSC_IOG20_APG40

Source Field

LTPULLRT

Source Section

SS7HSLPG1

LTSCCFAL

Timer_T2, time SSCF will attempt alignment

Data Source

MSC_IOG20_APG40

Source Field

LTSCCFAL

Source Section

SS7HSLPG1

LTSCCOPR

Timer_REPEAT-SREC, minimum interval between reports of an SSCOP recovery

Data Source

MSC_IOG20_APG40

Source Field

LTSCCOPR

Source Section

SS7HSLPG1

LTSETALG

Timer_T1, time between link release and re-establishment during alignment

Data Source

MSC_IOG20_APG40

Source Field

LTSETALG

Source Section

SS7HSLPG1

LTSTATLS

T_loss, STAT loss limit

Data Source

MSC_IOG20_APG40

Source Field

LTSTATLS

Source Section

SS7HSLPG1

LTTAUERR

T (tau), error monitoring interval

Data Source

MSC_IOG20_APG40

© Copyright IBM Corp. 2008, 2009. All Rights Reserved.

Source Field

LTTAUERR

Source Section

SS7HSLPG1

MONEREVT

N, Monitoring intervals after 400ms error event

Data Source

MSC_IOG20_APG40

Source Field

MONEREVT

Source Section

SS7HSLPG1

MONINTER

N_blk, monitoring intervals per block

Data Source

MSC_IOG20_APG40

Source Field

MONINTER

Source Section

SS7HSLPG1

NMXSDPDU

MaxPD, maximum number of SD PDUs sent between POLL PDUs

Data Source

MSC_IOG20_APG40

Source Field

NMXSDPDU

Source Section

SS7HSLPG1

NMXSTPDU

MaxSTAT, maximum number of list elements in a STAT PDU

Data Source

MSC_IOG20_APG40

Source Field

NMXSTPDU

Source Section

SS7HSLPG1

NMXUNACK

MaxCC, maximum number of unacknowledged BGN, END, ER, or RS PDUs

Data Source

MSC_IOG20_APG40

Source Field

NMXUNACK

Source Section

SS7HSLPG1

NT17REAL

T1.111.4 T17 Timer, "delay to avoidoscillation of initial alignment failure and link restart" in ms.

Data Source

MSC_IOG20_APG40

Source Field

NT17REAL

© Copyright IBM Corp. 2008, 2009. All Rights Reserved.

Source Section

SS7PRGRP

PCRN2

Number of octets in TB and RTB before forced retransmission is ordered-64 -1. Valid only when ERRCORR = 2.

Data Source

MSC_IOG20_APG40

Source Field

PCRN2

Source Section

SS7PRGRP

PDUSENTP

N1, PDUs sent during normal proving

Data Source

MSC_IOG20_APG40

Source Field

PDUSENTP

Source Section

SS7HSLPG1

PERLEN

Period Length

SCCOPPDU

Max_NRP, maximum number of retransmitted SSCOP PDUs permissible for link proving

Data Source

MSC_IOG20_APG40

Source Field

SCCOPPDU

Source Section

SS7HSLPG1

SUERMD

SUERM parameter D in signal units/4.

Data Source

MSC_IOG20_APG40

Source Field

SUERMD

Source Section

SS7PRGRP

SUERMT

SUERM parameter T.

Data Source

MSC_IOG20_APG40

Source Field

SUERMT

Source Section

SS7PRGRP

TAS

T1.111.7 T1 Timer, "signalling linktest message acknowledgementsupervision" in sec.

Data Source

MSC_IOG20_APG40

Source Field

TAS

© Copyright IBM Corp. 2008, 2009. All Rights Reserved.

Source Section

SS7PRGRP

THRSRUNQ

Thres, threshold for comparing the running Quality of Service

Data Source

MSC_IOG20_APG40

Source Field

THRSRUNQ

Source Section

SS7HSLPG1

TTS

Signalling link test procedure periodin sec.

Data Source

MSC_IOG20_APG40

Source Field

TTS

Source Section

SS7PRGRP

MSC_SS7Link Primitive Calculations

The following is a list of primitive calculations for the MSC_SS7Link entity.

C7_SLTL_DiffRX

% C7 Link RX Traffic (Erlangs) Difference from Mean

Calculation

```
(C7_SLTL_RX - MSC_SS7LinkSet.C7_LSTL_AvgRX) * 100.0 /
MSC_SS7LinkSet.C7_LSTL_AvgRX
```

C7_SLTL_DiffTX

% C7 Link TX Traffic (Erlangs) Difference from Mean

Calculation

```
(C7_SLTL_TX - MSC_SS7LinkSet.C7_LSTL_AvgTX) * 100.0 /
MSC_SS7LinkSet.C7_LSTL_AvgTX
```

C7_SLTL_RX

C7 Link Received Traffic (Erlangs)

Calculation

```
(8 * vsum(nullValue(NSIFSRE,RECVDOCT_MSC_C7Link), (6 * null-
Value(NMSURE_C7SL1,MSURECD_MSC_C7Link))) / (1.0 * ((PERLEN * 60.0) *
64000)))
```

C7_SLTL_TX

C7 Link Transmitted Traffic (Erlangs)

Calculation

```
(8 * vsum(nullValue(NSIFTR,TRANOCT_MSC_C7Link), (6 * null-
Value(NMSUTR_C7SL1,MSUTRAN_MSC_C7Link))) / (1.0 * ((PERLEN * 60.0) *
64000)))
```

DataRate

Number of MSU received and Transmitted

Calculation

```
64000
```

GRAPHmultiLineSeparator

Special Control Field for Multi-Line Graphs

Calculation

```
""
```

InterconnectTraffReciev

No. Of recived SIF and SIO octets per second

Calculation

```
(vsum((NSIFSRE * PERLEN * 100.0 / 8), -1.0 * 6 * PERLEN * NMSURE_C7SL1)) /
PERLEN
```

© Copyright IBM Corp. 2008, 2009. All Rights Reserved.

InterconnectTraffTrans

No. Of transmitted SIF and SIO octets per second

Calculation

```
(vsum((NSIFTR * PERLEN * 100.0 / 8), -1.0 * 6 * PERLEN * NMSUTR_C7SL1)) /
PERLEN
```

INTERVALS

Number of 60 minute intervals covered

Calculation

```
PERLEN / (1.0 * 60)
```

INTERVALS_C7TM

Number of 60 minute intervals covered (from C7TMFILE data)

Calculation

```
PERLEN_C7TM / (1.0 * 60)
```

Link_Usage

Sum of TX and RX Usage

Calculation

```
vsum(( 8.0 * ( vsum( NSIFTR, 6.0 * NMSUTR )) / ( 3600.0 * DataRate )), vsum(
NSIFSRE, 6.0 * NMSURE ) / ( 3600.0 * DataRate ))
```

MSUS

Number of MSU received and Transmitted

Calculation

```
vsum( NMSUTR, NMSURE )
```

NMSURE

Number of MSU's received

Calculation

```
nullValue(NMSURE_C7SL1, NMSURE_ASC_CCITT7)
```

NMSUTR

Number of MSU's transmitted

Calculation

```
nullValue(NMSUTR_C7SL1, NMSUTR_ASC_CCITT7)
```

NumberMSUsReceived

Number of MSU's received

Calculation

```
nullValue(NMSURE_C7SL1,MSURECD_MSC_C7Link)
```

NumberMSUsTransmitted

Number of MSU's transmitted

Calculation

```
nullValue(NMSUTR_C7SL1,MSUTRAN_MSC_C7Link)
```

NumberSIFAndSIOOctetsReceived

Number of SIF and SIO octets received

Calculation

```
nullValue(NSIFSRE,RECVDOCT_MSC_C7Link)
```

NumberSIFAndSIOOctetsTransmitted

Number of SIF and SIO octets transmitted

Calculation

```
nullValue(NSIFTR,TRANOCT_MSC_C7Link)
```

NumberSLFailures

Number of SL failures, all reasons

Calculation

```
nullValue(NSLFA,NMDCLFLR)
```

NUMDAYS

of days in Report

Calculation

```
DAYSINREPORT()
```

NUMHOURS

of hours in Summation Data

© Copyright IBM Corp. 2008, 2009. All Rights Reserved.

Calculation

PercentageLinkAvailability

Percentage Link Availability

Calculation

```
nullValue(ASLDUR,TLNKACTV * 10) * 100.0 / (PERLEN * 60)
```

PercentageLocalBusy

Percentage Local Busy

Calculation

```
((100 * LBUSDUR / 10.0) / (1.0 * (PERLEN * 60)))
```

VENDORTECH

Vendor Technology

Calculation

```
isNull( PERLEN ) ? nullString() : "EricssonGSM"
```

MSC_SS7Link Peg Counts

The following is a list of peg counts for the MSC_SS7Link entity.

ACHGOVRS

Number of automatic changeovers

Data Source

MSC_IOG20_APG40

Source Field

ACHGOVRS

Source Section

SS7SLMT2

ACHGOVRS_SS7HSLMT2

Number of automatic changeovers

Data Source

MSC_IOG20_APG40

Source Field

ACHGOVRS

Source Section

SS7HSLMT2

ALGNFLRS_SS7HSLMT2

Signalling link alignment failures

Data Source

MSC_IOG20_APG40

Source Field

ALGNFLRS

Source Section

SS7HSLMT2

ASLDUR

Duration of link in In-Service state in seconds.

Data Source

MSC_IOG20_APG40

Source Field

ASLDUR

Source Section

C7SL1

CDISCONX_SS7HSLMT3

Number of abnormal occurrences of SSCOP Connection Disconnect

Data Source

MSC_IOG20_APG40

© Copyright IBM Corp. 2008, 2009. All Rights Reserved.

Source Field

CDISCONX

Source Section

SS7HSLMT3

CGSTEVL_SS7HSLMT1

Current link transmit congestion level

Data Source

MSC_IOG20_APG40

Source Field

CGSTEVL

Source Section

SS7HSLMT1

CGSTLEVL

Current Link Transmit Congestion Level

Data Source

MSC_IOG20_APG40

Source Field

CGSTLEVL

Source Section

SS7SLMT1

CGSTSTAT

Current Link Transmit Congestion State

Data Source

MSC_IOG20_APG40

Source Field

CGSTSTAT

Source Section

SS7SLMT1

CGSTSTAT_SS7HSLMT1

Current link transmit congestion state

Data Source

MSC_IOG20_APG40

Source Field

CGSTSTAT

Source Section

SS7HSLMT1

CHOVERS

Number of occurrences of local automatic changeover

Data Source

MSC_IOG20_APG40

Source Field

CHOVERS

Source Section

C7SL1

CLUSTERCODE_MSC_SS7SLMT1

SS7 Link Cluster code

Data Source

MSC_IOG20_APG40

Source Field

CLUSTERCODE

Source Section

SS7SLMT1

© Copyright IBM Corp. 2008, 2009. All Rights Reserved.

CLUSTERCODE_MSC_SS7SLMT2

SS7 Link Cluster code

Data Source

MSC_IOG20_APG40

Source Field

CLUSTERCODE

Source Section

SS7SLMT2

CLUSTERCODE_MSC_SS7SLTRAFF

SS7 Link Cluster code

Data Source

MSC_IOG20_APG40

Source Field

CLUSTERCODE

Source Section

SS7SLTRAFF

CNRECONX_SS7HSLMT3

Number of SSCOP Connection Reestablishment/Resynchronizations

Data Source

MSC_IOG20_APG40

Source Field

CNRECONX

Source Section

SS7HSLMT3

CNSUMERS_SS7HSLMT3

A SSCOP Connection sum of errors counter.That is the sum of CDISCONX and INITFLRS

Data Source

MSC_IOG20_APG40

Source Field

CNSUMERS

Source Section

SS7HSLMT3

CONCNT1

Number of occurrences of SL congestion indications level 1

Data Source

MSC_IOG20_APG40

Source Field

CONCNT1

Source Section

C7SL2

CONCNT2

Number of occurrences of SL congestion indications level 2

Data Source

MSC_IOG20_APG40

Source Field

CONCNT2

Source Section

C7SL2

CONCNT3

Number of occurrences of SL congestion indications level 3

Data Source

MSC_IOG20_APG40

© Copyright IBM Corp. 2008, 2009. All Rights Reserved.

Source Field

CONCNT3

Source Section

C7SL2

CONDUR1

Cumulative duration of SL congestion level 1 in seconds

Data Source

MSC_IOG20_APG40

Source Field

CONDUR1

Source Section

C7SL2

CONDUR2

Cumulative duration of SL congestion level 2 in seconds

Data Source

MSC_IOG20_APG40

Source Field

CONDUR2

Source Section

C7SL2

CONDUR3

Cumulative duration of SL congestion level 3 in seconds

Data Source

MSC_IOG20_APG40

Source Field

CONDUR3

Source Section

C7SL2

CONSTOP1

Number of indications of stop of SL congestion level 1

Data Source

MSC_IOG20_APG40

Source Field

CONSTOP1

Source Section

C7SL2

CONSTOP2

Number of indications of stop of SL congestion level 2

Data Source

MSC_IOG20_APG40

Source Field

CONSTOP2

Source Section

C7SL2

CONSTOP3

Number of indications of stop of SL congestion level 3

Data Source

MSC_IOG20_APG40

Source Field

CONSTOP3

Source Section

C7SL2

© Copyright IBM Corp. 2008, 2009. All Rights Reserved.

DCLRFAIL

Indication of Link Declared Failure State

Data Source

MSC_IOG20_APG40

Source Field

DCLRFAIL

Source Section

SS7SLMT1

DCLRFAIL_SS7HSLMT1

Indication of link declared failure state

Data Source

MSC_IOG20_APG40

Source Field

DCLRFAIL

Source Section

SS7HSLMT1

DCONG

Cumulative duration of SL congestion (in s).

Data Source

MSC_C7TMFILE

Source Field

DCONG

Source Section

ASC_CCITT7

DDCFLABN

Duration of SL declared failures due to abnormal FIBR/BNSR in 10 sec. Units

Data Source

MSC_IOG20_APG40

Source Field

DDCFLABN

Source Section

SS7SLMT2

DDCFLHWP

Duration of SL declared failures due to due to hardware problems in 10 sec. units

Data Source

MSC_IOG20_APG40

Source Field

DDCFLHWP

Source Section

SS7SLMT2

DDCFLHWP_SS7HSLMT2

Duration of signalling link declared failures due to hardware problems in 10 sec units

Data Source

MSC_IOG20_APG40

Source Field

DDCFLHWP

Source Section

SS7HSLMT2

DDCFLXDA

Duration of SL declared failures due to excessive delay of acknowledgement in 10 sec. Units

Data Source

MSC_IOG20_APG40

© Copyright IBM Corp. 2008, 2009. All Rights Reserved.

Source Field

DDCFLXDA

Source Section

SS7SLMT2

DDCFLXDA_SS7HSLMT2

Duration of signalling link declared failures due to excessive delay of acknowledgement in 10 sec units

Data Source

MSC_IOG20_APG40

Source Field

DDCFLXDA

Source Section

SS7HSLMT2

DDCFLXDC

Duration of SL declared failures due to excessive duration of congestion

Data Source

MSC_IOG20_APG40

Source Field

DDCFLXDC

Source Section

SS7SLMT2

DDCFLXDC_SS7HSLMT2

Duration of signalling link declared failures due to excessive duration of congestion in 10 sec units

Data Source

MSC_IOG20_APG40

Source Field

DDCFLXDC

Source Section

SS7HSLMT2

DDCFLXER

Duration of SL declared failures due to excessive error rate in10 sec. units

Data Source

MSC_IOG20_APG40

Source Field

DDCFLXER

Source Section

SS7SLMT2

DDCFLXER_SS7HSLMT2

Duration of signalling link declared failures due to excessive error rate in 10 sec units

Data Source

MSC_IOG20_APG40

Source Field

DDCFLXER

Source Section

SS7HSLMT2

DISMES1

Number of messages discarded due to SL congestion on level 1.

Data Source

MSC_IOG20_APG40

Source Field

DISMES1

© Copyright IBM Corp. 2008, 2009. All Rights Reserved.

Source Section

SS7HSLMT3

DISMES2

Number of messages discarded due to SL congestion on level 2.

Data Source

MSC_IOG20_APG40

Source Field

DISMES2

Source Section

SS7HSLMT3

DISMES3

Number of messages discarded due to SL congestion on level 3.

Data Source

MSC_IOG20_APG40

Source Field

DISMES3

Source Section

SS7HSLMT3

DISMSU1

Number of occurrences of MSUs discarded due to SL congestion level 1

Data Source

MSC_IOG20_APG40

Source Field

DISMSU1

Source Section

C7SL2

DISMSU2

Number of occurrences of MSUs discarded due to SL congestion level 2

Data Source

MSC_IOG20_APG40

Source Field

DISMSU2

Source Section

C7SL2

DISMSU3

Number of occurrences of MSUs discarded due to SL congestion level 3

Data Source

MSC_IOG20_APG40

Source Field

DISMSU3

Source Section

C7SL2

DRBSYDCL

Duration of link busy status declared by near-end signaling terminal in 50 ms. units

Data Source

MSC_IOG20_APG40

Source Field

DRBSYDCL

Source Section

SS7SLMT1

DRBSYDCL_SS7HSLMT1

Duration of link busy status declared by near-end signalling terminal in 50 ms units

© Copyright IBM Corp. 2008, 2009. All Rights Reserved.

Data Source

MSC_IOG20_APG40

Source Field

DRBSYDCL

Source Section

SS7HSLMT1

DRBSYRCD

Duration of busy-link status unit received from far-end in 50 ms. units

Data Source

MSC_IOG20_APG40

Source Field

DRBSYRCD

Source Section

SS7SLMT1

DRDCLFLR

Duration of SL declared failures, - All types in 10 sec. Units

Data Source

MSC_IOG20_APG40

Source Field

DRDCLFLR

Source Section

SS7SLMT2

DRDCLFLR_SS7HSLMT2

Duration of signalling link declared failures, all types, in 10 sec units

Data Source

MSC_IOG20_APG40

Source Field

DRDCLFLR

Source Section

SS7HSLMT2

DRFEPRO

Duration of far-end processor outage in 10 sec. units

Data Source

MSC_IOG20_APG40

Source Field

DRFEPRO

Source Section

SS7SLMT1

DRFEPRO_SS7HSLMT1

Duration of Far-end Processor Outage in 10 second units

Data Source

MSC_IOG20_APG40

Source Field

DRFEPRO

Source Section

SS7HSLMT1

DRLCLPRO

Duration of near-end processor outage in 10 sec. units

Data Source

MSC_IOG20_APG40

Source Field

DRLCLPRO

© Copyright IBM Corp. 2008, 2009. All Rights Reserved.

Source Section

SS7SLMT2

DRLCLPRO_SS7HSLMT2

Duration of near-end processor outage in 10 second units

Data Source

MSC_IOG20_APG40

Source Field

DRLCLPRO

Source Section

SS7HSLMT2

DRLKFAIL

Duration of SL failures (declared and undeclared) in 10 sec. units.

Data Source

MSC_IOG20_APG40

Source Field

DRLKFAIL

Source Section

SS7SLMT2

DRLKINHB

Duration of signalling link management inhibits in 10 sec. units

Data Source

MSC_IOG20_APG40

Source Field

DRLKINHB

Source Section

SS7SLMT2

DRLKINHB_SS7HSLMT2

Duration of signalling link management inhibits in 10 sec units

Data Source

MSC_IOG20_APG40

Source Field

DRLKINHB

Source Section

SS7HSLMT2

DRNOCRED_SS7HSLMT3

Cumulative duration of time in seconds

Data Source

MSC_IOG20_APG40

Source Field

DRNOCRED

Source Section

SS7HSLMT3

DUNAV

Duration of SL Not-In-Service (in seconds).

Data Source

MSC_C7TMFILE

Source Field

DUNAV

Source Section

ASC_CCITT7

ECCNGLV1

Number of times SL enters level 1 congestion state

© Copyright IBM Corp. 2008, 2009. All Rights Reserved.

Data Source

MSC_IOG20_APG40

Source Field

ECCNGLV1

Source Section

SS7SLMT1

ECCNGLV1_SS7HSLMT1

Number of times a signalling link enters level 1 congestion state

Data Source

MSC_IOG20_APG40

Source Field

ECCNGLV1

Source Section

SS7HSLMT1

ECCNGLV2

Number of times SL enters level 2 congestion state

Data Source

MSC_IOG20_APG40

Source Field

ECCNGLV2

Source Section

SS7SLMT1

ECCNGLV2_SS7HSLMT1

Number of times a signalling link enters level 2 congestion state

Data Source

MSC_IOG20_APG40

Source Field

ECCNGLV2

Source Section

SS7HSLMT1

ECCNGLV3

Number of times SL enters level 3 congestion state

Data Source

MSC_IOG20_APG40

Source Field

ECCNGLV3

Source Section

SS7SLMT1

ECCNGLV3_SS7HSLMT1

Number of times a signalling link enters level 3 congestion state

Data Source

MSC_IOG20_APG40

Source Field

ECCNGLV3

Source Section

SS7HSLMT1

ERRSEC

Number of errored seconds

Data Source

MSC_IOG20_APG40

Source Field

ERRSEC

© Copyright IBM Corp. 2008, 2009. All Rights Reserved.

Source Section

SS7SLTRAFF

ERRSEC_SS7HSLTRAF

Number of errored seconds for SAAL, ATM and Physical layers

Data Source

MSC_IOG20_APG40

Source Field

ERRSEC

Source Section

SS7HSLTRAF

FARMGINH

Number of far-end management inhibits

Data Source

MSC_IOG20_APG40

Source Field

FARMGINH

Source Section

SS7SLMT2

FARMGINH_SS7HSLMT2

Number of far-end management inhibits

Data Source

MSC_IOG20_APG40

Source Field

FARMGINH

Source Section

SS7HSLMT2

HDRDSCDS_SS7HSLMT3

Number of incoming ATM cells discarded due to protocol (ATM-layer Header) errors

Data Source

MSC_IOG20_APG40

Source Field

HDRDSCDS

Source Section

SS7HSLMT3

HECDSCDS_SS7HSLMT3

Number of incoming ATM cells discarded due to Header Error Control (HEC) violations

Data Source

MSC_IOG20_APG40

Source Field

HECDSCDS

Source Section

SS7HSLMT3

ICUICELS_SS7HSLTRAF

Number of incoming (received) ATM user-information (UI) cells

Data Source

MSC_IOG20_APG40

Source Field

ICUICELS

Source Section

SS7HSLTRAF

ILS_MSC_SS7SLMT1

Link Set Pointer

© Copyright IBM Corp. 2008, 2009. All Rights Reserved.

Data Source

MSC_IOG20_APG40

Source Field

ILS

Source Section

SS7SLMT1

ILS_MSC_SS7SLTRAFF

Link Set Pointer

Data Source

MSC_IOG20_APG40

Source Field

ILS

Source Section

SS7SLTRAFF

INCCELLS_SS7HSLTRAF

Number of incoming (received) NDC-valid ATM cells

Data Source

MSC_IOG20_APG40

Source Field

INCCELLS

Source Section

SS7HSLTRAF

INITFLRS_SS7HSLMT3

Number of SSCOP Connection Initiation Failures

Data Source

MSC_IOG20_APG40

Source Field

INITFLRS

Source Section

SS7HSLMT3

INVLPDUS_SS7HSLMT3

Number of invalid SSCOP PDUs received

Data Source

MSC_IOG20_APG40

Source Field

INVLPDUS

Source Section

SS7HSLMT3

LACKCRED_SS7HSLMT3

Number of times that SSCOP had PDUs to send to its peer but could not do so because it was not given credit by the far end

Data Source

MSC_IOG20_APG40

Source Field

LACKCRED

Source Section

SS7HSLMT3

LBUSDUR

Duration of local busy in 100ms units

Data Source

MSC_IOG20_APG40

© Copyright IBM Corp. 2008, 2009. All Rights Reserved.

Source Field

LBUSDUR

Source Section

C7SL1

LINHNO

Number of occurrences of local management inhibit

Data Source

MSC_IOG20_APG40

Source Field

LINHNO

Source Section

C7SL1

LKMTCST

Maintenance state (same as 'signalling link service status')

Data Source

MSC_IOG20_APG40

Source Field

LKMTCST

Source Section

SS7SLMT1

LKMTCST_SS7HSLMT1

Maintenance state (same as 'signalling link service status')

Data Source

MSC_IOG20_APG40

Source Field

LKMTCST

Source Section

SS7HSLMT1

LOCINHDUR

Duration of SL inhibition due to local management action in seconds

Data Source

MSC_IOG20_APG40

Source Field

LOCINHDUR

Source Section

C7SL1

LOFMSU1

Number of congestion events resulting in loss of MSUs level 1

Data Source

MSC_IOG20_APG40

Source Field

LOFMSU1

Source Section

C7SL2

LOFMSU2

Number of congestion events resulting in loss of MSUs level 2

Data Source

MSC_IOG20_APG40

Source Field

LOFMSU2

Source Section

C7SL2

© Copyright IBM Corp. 2008, 2009. All Rights Reserved.

LOFMSU3

Number of congestion events resulting in loss of MSUs level 3

Data Source

MSC_IOG20_APG40

Source Field

LOFMSU3

Source Section

C7SL2

LS10SCAN

Number of 10 second scans in S7LS

Data Source

MSC_IOG20_APG40

Source Field

LS10SCAN

Source Section

SS7SLMT2

LS10SCAN_SS7HSLMT2

Number of 10 sec scans in S7LS

Data Source

MSC_IOG20_APG40

Source Field

LS10SCAN

Source Section

SS7HSLMT2

LSID

C7 Linkset ID

Data Source

MSC_C7TMFILE

Source Field

LSID

Source Section

ASC_CCITT7

MCHGOVRS

Number of near-end manual changeovers

Data Source

MSC_IOG20_APG40

Source Field

MCHGOVRS

Source Section

SS7SLMT2

MCHGOVRS_SS7HSLMT2

Number of near-end manual changeovers

Data Source

MSC_IOG20_APG40

Source Field

MCHGOVRS

Source Section

SS7HSLMT2

MEMBERCODE_MSC_SS7SLMT1

SS7 Cluster Member Code

Data Source

MSC_IOG20_APG40

© Copyright IBM Corp. 2008, 2009. All Rights Reserved.

Source Field

MEMBERCODE

Source Section

SS7SLMT1

MEMBERCODE_MSC_SS7SLMT2

SS7 Cluster Member Code

Data Source

MSC_IOG20_APG40

Source Field

MEMBERCODE

Source Section

SS7SLMT2

MEMBERCODE_MSC_SS7SLTRAFF

SS7 Cluster Member Code

Data Source

MSC_IOG20_APG40

Source Field

MEMBERCODE

Source Section

SS7SLTRAFF

MGMTINHB

Indication of Link Management-Inhibit

Data Source

MSC_IOG20_APG40

Source Field

MGMTINHB

Source Section

SS7SLMT1

MGMTINHB_SS7HSLMT1

Indication of link management-inhibit status

Data Source

MSC_IOG20_APG40

Source Field

MGMTINHB

Source Section

SS7HSLMT1

MOCTRGTT_SS7HSLTRAF

Number of MTP3 message octets associated with MTP3 messages received that required GTT

Data Source

MSC_IOG20_APG40

Source Field

MOCTRGTT

Source Section

SS7HSLTRAF

MSC_RELEASE

Release

MSGDISC0_SS7HSLMT1

Number of priority 0 MTP3 messages discarded due to signalling link congestion

Data Source

MSC_IOG20_APG40

Source Field

MSGDISC0

© Copyright IBM Corp. 2008, 2009. All Rights Reserved.

Source Section

SS7HSLMT1

MSGDISC1_SS7HSLMT1

Number of priority 1 MTP3 messages discarded due to signalling link congestion

Data Source

MSC_IOG20_APG40

Source Field

MSGDISC1

Source Section

SS7HSLMT1

MSGDISC2_SS7HSLMT1

Number of priority 2 MTP3 messages discarded due to signalling link congestion

Data Source

MSC_IOG20_APG40

Source Field

MSGDISC2

Source Section

SS7HSLMT1

MSGDISC3_SS7HSLMT1

Number of priority 3 MTP3 messages discarded due to signalling link congestion

Data Source

MSC_IOG20_APG40

Source Field

MSGDISC3

Source Section

SS7HSLMT1

MSGDISCH_SS7HSLMT1

Number of MTP3 messages discarded due to message length longer than 272 octets

Data Source

MSC_IOG20_APG40

Source Field

MSGDISCH

Source Section

SS7HSLMT1

MSGSRCVD_SS7HSLTRAF

Number of MTP3 messages received

Data Source

MSC_IOG20_APG40

Source Field

MSGSRCVD

Source Section

SS7HSLTRAF

MSGSRGTT_SS7HSLTRAF

Number of MTP3 messages received requiring Global Title Translation (GTT)

Data Source

MSC_IOG20_APG40

Source Field

MSGSRGTT

Source Section

SS7HSLTRAF

MSGSTRAN_SS7HSLTRAF

Number of MTP3 messages transmitted

© Copyright IBM Corp. 2008, 2009. All Rights Reserved.

Data Source

MSC_IOG20_APG40

Source Field

MSGSTRAN

Source Section

SS7HSLTRAF

MSUDISC0

Number of priority 0 MSUs discarded due to SL congestion

Data Source

MSC_IOG20_APG40

Source Field

MSUDISC0

Source Section

SS7SLMT1

MSUDISC1

Number of priority 1 MSUs discarded due to SL congestion

Data Source

MSC_IOG20_APG40

Source Field

MSUDISC1

Source Section

SS7SLMT1

MSUDISC2

Number of priority 2 MSUs discarded due to SL congestion

Data Source

MSC_IOG20_APG40

Source Field

MSUDISC2

Source Section

SS7SLMT1

MSUDISC3

Number of priority 3 MSUs discarded due to SL congestion

Data Source

MSC_IOG20_APG40

Source Field

MSUDISC3

Source Section

SS7SLMT1

MSURCERR

Number of MSUs received in error

Data Source

MSC_IOG20_APG40

Source Field

MSURCERR

Source Section

SS7SLTRAFF

MSURECD_MSC_C7Link

Number of MSU's received

Data Source

MSC_IOG20_APG40

Source Field

MSURECD

© Copyright IBM Corp. 2008, 2009. All Rights Reserved.

Source Section

SS7SLTRAFF

MSURETRN_MSC_C7Link

Number of MSUs retransmitted

Data Source

MSC_IOG20_APG40

Source Field

MSURETRN

Source Section

SS7SLTRAFF

MSUSRGTT

MSUs received requiring GTT

Data Source

MSC_IOG20_APG40

Source Field

MSUSRGTT

Source Section

SS7SLTRAFF

MSUTRAN_MSC_C7Link

Number of MSU's transmitted, (retransmission not included)

Data Source

MSC_IOG20_APG40

Source Field

MSUTRAN

Source Section

SS7SLTRAFF

MTCEUSG

Link maintenance usage in 10 sec. units

Data Source

MSC_IOG20_APG40

Source Field

MTCEUSG

Source Section

SS7SLMT1

MTCEUSG_SS7HSLMT1

Link maintenance usage in 10 second units

Data Source

MSC_IOG20_APG40

Source Field

MTCEUSG

Source Section

SS7HSLMT1

N10SCAN_MSC_C7Link

Number of ten second scannings

Data Source

MSC_IOG20_APG40

Source Field

N10SCAN

Source Section

SS7SLMT1

N10SCAN_SS7HSLMT1

Number of 10 sec scans.

© Copyright IBM Corp. 2008, 2009. All Rights Reserved.

Data Source

MSC_IOG20_APG40

Source Field

N10SCAN

Source Section

SS7HSLMT1

NDCFLABN

Number of SL declared failures abnormal FIBR/BNSR

Data Source

MSC_IOG20_APG40

Source Field

NDCFLABN

Source Section

SS7SLMT2

NDCFLHWP

Number of SL declared failures due to hardware problems

Data Source

MSC_IOG20_APG40

Source Field

NDCFLHWP

Source Section

SS7SLMT2

NDCFLHWP_SS7HSLMT2

Number of signalling link declared failures due to hardware problems

Data Source

MSC_IOG20_APG40

Source Field

NDCFLHWP

Source Section

SS7HSLMT2

NDCFLXDA

Number of SL declared failures due to excessive delay of acknowledgement

Data Source

MSC_IOG20_APG40

Source Field

NDCFLXDA

Source Section

SS7SLMT2

NDCFLXDA_SS7HSLMT2

Number of signalling link declared failures due to excessive delay of acknowledgement

Data Source

MSC_IOG20_APG40

Source Field

NDCFLXDA

Source Section

SS7HSLMT2

NDCFLXDC

Number of SL declared failures due to due to excessive duration of congestion

Data Source

MSC_IOG20_APG40

Source Field

NDCFLXDC

© Copyright IBM Corp. 2008, 2009. All Rights Reserved.

Source Section

SS7SLMT2

NDCFLXDC_SS7HSLMT2

Number of signalling link declared failures due to excessive duration of congestion

Data Source

MSC_IOG20_APG40

Source Field

NDCFLXDC

Source Section

SS7HSLMT2

NDCFLXER

Number of SL declared failures due to excessive error rate

Data Source

MSC_IOG20_APG40

Source Field

NDCFLXER

Source Section

SS7SLMT2

NDCFLXER_SS7HSLMT2

Number of signalling link declared failures due to excessive error rate

Data Source

MSC_IOG20_APG40

Source Field

NDCFLXER

Source Section

SS7HSLMT2

NDISC

Number of MSUs discarded due to SL congestion.

Data Source

MSC_C7TMFILE

Source Field

NDISC

Source Section

ASC_CCITT7

NEARMGIH

Number of near-end management inhibits

Data Source

MSC_IOG20_APG40

Source Field

NEARMGIH

Source Section

SS7SLMT2

NEARMGIH_SS7HSLMT2

Number of near-end management inhibits

Data Source

MSC_IOG20_APG40

Source Field

NEARMGIH

Source Section

SS7HSLMT2

NEGACKS

Number of negative acknowledgments received

© Copyright IBM Corp. 2008, 2009. All Rights Reserved.

Data Source

MSC_IOG20_APG40

Source Field

NEGACKS

Source Section

SS7SLTRAFF

NLOSS

Number of congestion events resulting in loss of MSUs.

Data Source

MSC_C7TMFILE

Source Field

NLOSS

Source Section

ASC_CCITT7

NMDCLFLR

Number of SL declared failures,- All types

Data Source

MSC_IOG20_APG40

Source Field

NMDCLFLR

Source Section

SS7SLMT2

NMDCLFLR_SS7HSLMT2

Number of signalling link declared failures, all types

Data Source

MSC_IOG20_APG40

Source Field

NMDCLFLR

Source Section

SS7HSLMT2

NMSURE_ASC_CCITT7

Number of MSUs received.

Data Source

MSC_C7TMFILE

Source Field

NMSURE

Source Section

ASC_CCITT7

NMSURE_C7SL1

Number of MSU's received

Data Source

MSC_IOG20_APG40

Source Field

NMSURE

Source Section

C7SL1

NMSUTR_ASC_CCITT7

Number of MSUs transmitted.

Data Source

MSC_C7TMFILE

Source Field

NMSUTR

© Copyright IBM Corp. 2008, 2009. All Rights Reserved.

Source Section

ASC_CCITT7

NMSUTR_C7SL1

Number of MSU's transmitted

Data Source

MSC_IOG20_APG40

Source Field

NMSUTR

Source Section

C7SL1

NNAREC

Number of negative acknowledgements received

Data Source

MSC_IOG20_APG40

Source Field

NNAREC

Source Section

C7SL1

NOCTRE

Number of SIF and SIO octets received.

Data Source

MSC_C7TMFILE

Source Field

NOCTRE

Source Section

ASC_CCITT7

NOCTRTR

Number of octets retransmitted.

Data Source

MSC_C7TMFILE

Source Field

NOCTRTR

Source Section

ASC_CCITT7

NOCTTR

Number of SIF and SIO octets transmitted.

Data Source

MSC_C7TMFILE

Source Field

NOCTTR

Source Section

ASC_CCITT7

NORTRO

Number of octets retransmitted

Data Source

MSC_IOG20_APG40

Source Field

NORTRO

Source Section

C7SL1

NSIFSRE

Number of SIF and SIO octets received

© Copyright IBM Corp. 2008, 2009. All Rights Reserved.

Data Source

MSC_IOG20_APG40

Source Field

NSIFSRE

Source Section

C7SL1

NSIFTR

Number of SIF and SIO octets transmitted

Data Source

MSC_IOG20_APG40

Source Field

NSIFTR

Source Section

C7SL1

NSLALPRFL

Number of occurrences of SL Alignment or Proving failure.

Data Source

MSC_IOG20_APG40

Source Field

NSLALPRFL

Source Section

C7SL1

NSLCO

Number of SL congestion indications.

Data Source

MSC_C7TMFILE

Source Field

NSLCO

Source Section

ASC_CCITT7

NSLFA

Number of SL failures, all reasons.

Data Source

MSC_C7TMFILE

Source Field

NSLFA

Source Section

ASC_CCITT7

NSUERR

Number of signal units in error

Data Source

MSC_IOG20_APG40

Source Field

NSUERR

Source Section

C7SL1

OCDANMLS_SS7HSLMT3

Number of time of Out of Cell Delineation (OCD) anomalies

Data Source

MSC_IOG20_APG40

Source Field

OCDANMLS

© Copyright IBM Corp. 2008, 2009. All Rights Reserved.

Source Section

SS7HSLMT3

OCTRCGTT

MSU octets received for messages requiring GTT

Data Source

MSC_IOG20_APG40

Source Field

OCTRCGTT

Source Section

SS7SLTRAFF

OGUICELS_SS7HSLTRAF

Number of outgoing (transmitted) ATM user-information (UI) cells

Data Source

MSC_IOG20_APG40

Source Field

OGUICELS

Source Section

SS7HSLTRAF

OUTCELLS_SS7HSLTRAF

Number of outgoing (transmitted) NDC-valid ATM cells

Data Source

MSC_IOG20_APG40

Source Field

OUTCELLS

Source Section

SS7HSLTRAF

PDULSTER_SS7HSLMT3

Number of SSCOP PDUs with List Element Errors

Data Source

MSC_IOG20_APG40

Source Field

PDULSTER

Source Section

SS7HSLMT3

PDUOCTRC_SS7HSLTRAF

Number of octets associated with SSCOP SD PDUs received

Data Source

MSC_IOG20_APG40

Source Field

PDUOCTRC

Source Section

SS7HSLTRAF

PDUOCTTR_SS7HSLTRAF

Number of SSCOP SD PDUs received

Data Source

MSC_IOG20_APG40

Source Field

PDUOCTTR

Source Section

SS7HSLTRAF

PDUSRCVD_SS7HSLTRAF

Number of octets associated with SSCOP SD PDUs retransmitted

© Copyright IBM Corp. 2008, 2009. All Rights Reserved.

Data Source

MSC_IOG20_APG40

Source Field

PDUSRCVD

Source Section

SS7HSLTRAF

PDUSTRAN_SS7HSLTRAF

Number of octets associated with SSCOP SD PDUs transmitted, including retransmissions

Data Source

MSC_IOG20_APG40

Source Field

PDUSTRAN

Source Section

SS7HSLTRAF

PDUSUMER_SS7HSLMT3

A SSCOP Errored PDUs sum of errors counter. That is a sum of UNEXPDUS, INVLPDUS and PDULSTER

Data Source

MSC_IOG20_APG40

Source Field

PDUSUMER

Source Section

SS7HSLMT3

PERLEN

Period Length

PERLEN_C7TM

Period Length (of C7TMFILE data)

PROSTAT

Indication of processor outage status units being received

Data Source

MSC_IOG20_APG40

Source Field

PROSTAT

Source Section

SS7SLMT1

PROTRAN

Indication of processor outage status units being transmitted

Data Source

MSC_IOG20_APG40

Source Field

PROTRAN

Source Section

SS7SLMT2

RECVDOCT_MSC_C7Link

Number of SIF and SIO octets received

Data Source

MSC_IOG20_APG40

Source Field

RECVDOCT

Source Section

SS7SLTRAFF

© Copyright IBM Corp. 2008, 2009. All Rights Reserved.

RECVDOCT_SS7HSLTRAF

Number of SIF and SIO octets received

Data Source

MSC_IOG20_APG40

Source Field

RECVDOCT

Source Section

SS7HSLTRAF

REMINHDUR

Duration of SL inhibition due to remote management action in seconds

Data Source

MSC_IOG20_APG40

Source Field

REMINHDUR

Source Section

C7SL1

RETRNOCT_MSC_C7Link

Number of SIF, SIO, LI, FSN, and BSN octets retransmitted

Data Source

MSC_IOG20_APG40

Source Field

RETRNOCT

Source Section

SS7SLTRAFF

RINHNO

Number of occurrences of local management uninhibit

Data Source

MSC_IOG20_APG40

Source Field

RINHNO

Source Section

C7SL1

SAALINSV_SS7HSLMT3

Total time in seconds that the link is regarded in-service (at level 2) by SAAL

Data Source

MSC_IOG20_APG40

Source Field

SAALINSV

Source Section

SS7HSLMT3

SAMPCNT

Number of samples from signalling terminal

Data Source

MSC_IOG20_APG40

Source Field

SAMPCNT

Source Section

SS7SLMT1

SAMPCNT_SS7HSLMT1

Number of samples from signalling terminal

Data Source

MSC_IOG20_APG40

© Copyright IBM Corp. 2008, 2009. All Rights Reserved.

Source Field

SAMPCNT

Source Section

SS7HSLMT1

SCANSEC_ASC_CCITT7

Measurement duration in seconds.

Data Source

MSC_C7TMFILE

Source Field

SCANSEC

Source Section

ASC_CCITT7

SDOCTRCV_SS7HSLTRAF

Number of SSCOP Sequence Data (SD) PDUs transmitted, including retransmissions

Data Source

MSC_IOG20_APG40

Source Field

SDOCTRCV

Source Section

SS7HSLTRAF

SDOCTRTR_SS7HSLTRAF

Number of octets associated with SSCOP PDUs of all types transmitted

Data Source

MSC_IOG20_APG40

Source Field

SDOCTRTR

Source Section

SS7HSLTRAF

SDOCTTRN_SS7HSLTRAF

Number of SSCOP PDUs of all types received

Data Source

MSC_IOG20_APG40

Source Field

SDOCTTRN

Source Section

SS7HSLTRAF

SDPDURCV_SS7HSLTRAF

Number of octets associated with SSCOP PDUs of all types received

Data Source

MSC_IOG20_APG40

Source Field

SDPDURCV

Source Section

SS7HSLTRAF

SDPDURRR_SS7HSLTRAF

Number of SSCOP SD PDUs retransmitted

Data Source

MSC_IOG20_APG40

Source Field

SDPDURRR

Source Section

SS7HSLTRAF

© Copyright IBM Corp. 2008, 2009. All Rights Reserved.

SDPDURTR_SS7HSLTRAF

Number of SSCOP PDUs of all types transmitted

Data Source

MSC_IOG20_APG40

Source Field

SDPDURTR

Source Section

SS7HSLTRAF

SDPDUTRN_SS7HSLTRAF

Number of SSCOP SD PDU transmitted requiring retransmission because they were not acknowledged by the far-end's SSCOP peer

Data Source

MSC_IOG20_APG40

Source Field

SDPDUTRN

Source Section

SS7HSLTRAF

SL10SCAN

Number of 10 second scans in S7SL

Data Source

MSC_IOG20_APG40

Source Field

SL10SCAN

Source Section

SS7SLMT2

SL10SCAN_SS7HSLMT2

Number of 10 sec scans in S7SL

Data Source

MSC_IOG20_APG40

Source Field

SL10SCAN

Source Section

SS7HSLMT2

SLPARMGP

Parameter group number for signalling link

Data Source

MSC_IOG20_APG40

Source Field

SLPARMGP

Source Section

SS7SLMT2

SLPARMGP_SS7HSLMT2

Parameter group number for signalling link

Data Source

MSC_IOG20_APG40

Source Field

SLPARMGP

Source Section

SS7HSLMT2

SYS7IND_C7SL1

Indicator

© Copyright IBM Corp. 2008, 2009. All Rights Reserved.

Data Source

MSC_IOG20_APG40

Source Field

SYS7IND

Source Section

C7SL1

SYS7IND_C7SL2

Indicator

Data Source

MSC_IOG20_APG40

Source Field

SYS7IND

Source Section

C7SL2

TDCNGLV1

Total duration of level 1 congestion state in 10 sec. units

Data Source

MSC_IOG20_APG40

Source Field

TDCNGLV1

Source Section

SS7SLMT1

TDCNGLV1_SS7HSLMT1

Total duration of level 1 congestion state in 10 sec units

Data Source

MSC_IOG20_APG40

Source Field

TDCNGLV1

Source Section

SS7HSLMT1

TDCNGLV2

Total duration of level 2 congestion state in 10 sec. units

Data Source

MSC_IOG20_APG40

Source Field

TDCNGLV2

Source Section

SS7SLMT1

TDCNGLV2_SS7HSLMT1

Total duration of level 2 congestion state in 10 sec units

Data Source

MSC_IOG20_APG40

Source Field

TDCNGLV2

Source Section

SS7HSLMT1

TDCNGLV3

Total duration of level 3 congestion state in 10 sec. units

Data Source

MSC_IOG20_APG40

Source Field

TDCNGLV3

© Copyright IBM Corp. 2008, 2009. All Rights Reserved.

Source Section

SS7SLMT1

TDCNGLV3_SS7HSLMT1

Total duration of level 3 congestion state in 10 sec units

Data Source

MSC_IOG20_APG40

Source Field

TDCNGLV3

Source Section

SS7HSLMT1

THRACHOV

Value of hourly link maintenance threshold for automatic changeovers

Data Source

MSC_IOG20_APG40

Source Field

THRACHOV

Source Section

SS7SLMT2

THRMSUER

Value of hourly link maintenance threshold for MSUs received in error

Data Source

MSC_IOG20_APG40

Source Field

THRMSUER

Source Section

SS7SLTRAFF

THRNEGAK

Value of hourly link maintenance threshold for negative acknowledgement received

Data Source

MSC_IOG20_APG40

Source Field

THRNEGAK

Source Section

SS7SLTRAFF

TLNKACTV

Signalling link active time in 10 sec. units

Data Source

MSC_IOG20_APG40

Source Field

TLNKACTV

Source Section

SS7SLMT1

TLNKACTV_SS7HSLMT1

Signalling link active time in 10 second units

Data Source

MSC_IOG20_APG40

Source Field

TLNKACTV

Source Section

SS7HSLMT1

TOTOCMSG_SS7HSLMT1

Accumulated total of link transmission buffer occupancy in MTP3 messages

© Copyright IBM Corp. 2008, 2009. All Rights Reserved.

Data Source

MSC_IOG20_APG40

Source Field

TOTOCMSG

Source Section

SS7HSLMT1

TOTOCMSU

Accumulated total of link transmission buffer occupancy in MSUs

Data Source

MSC_IOG20_APG40

Source Field

TOTOCMSU

Source Section

SS7SLMT1

TOTOCOCT

Accumulated total of link transmission buffer occupancy in octets

Data Source

MSC_IOG20_APG40

Source Field

TOTOCOCT

Source Section

SS7SLMT1

TOTOCOCT_SS7HSLMT1

Accumulated total of link transmission buffer occupancy in octets

Data Source

MSC_IOG20_APG40

Source Field

TOTOCOCT

Source Section

SS7HSLMT1

TOTPRIO0

Accumulated total of link transmission buffer occupancy in priority 0 MSUs

Data Source

MSC_IOG20_APG40

Source Field

TOTPRIO0

Source Section

SS7SLMT1

TOTPRIO0_SS7HSLMT1

Accumulated total of link transmission buffer occupancy in priority 0 MTP3 messages

Data Source

MSC_IOG20_APG40

Source Field

TOTPRIO0

Source Section

SS7HSLMT1

TOTPRIO1

Accumulated total of link transmission buffer occupancy in priority 1 MSUs

Data Source

MSC_IOG20_APG40

Source Field

TOTPRIO1

© Copyright IBM Corp. 2008, 2009. All Rights Reserved.

Source Section

SS7SLMT1

TOTPRIO1_SS7HSLMT1

Accumulated total of link transmission buffer occupancy in priority 1 MTP3 messages

Data Source

MSC_IOG20_APG40

Source Field

TOTPRIO1

Source Section

SS7HSLMT1

TOTPRIO2

Accumulated total of link transmission buffer occupancy in priority 2 MSUs

Data Source

MSC_IOG20_APG40

Source Field

TOTPRIO2

Source Section

SS7SLMT1

TOTPRIO2_SS7HSLMT1

Accumulated total of link transmission buffer occupancy in priority 2 MTP3 messages

Data Source

MSC_IOG20_APG40

Source Field

TOTPRIO2

Source Section

SS7HSLMT1

TOTPRIO3

Accumulated total of link transmission buffer occupancy in priority 3 MSUs

Data Source

MSC_IOG20_APG40

Source Field

TOTPRIO3

Source Section

SS7SLMT1

TOTPRIO3_SS7HSLMT1

Accumulated total of link transmission buffer occupancy in priority 3 MTP3 messages

Data Source

MSC_IOG20_APG40

Source Field

TOTPRIO3

Source Section

SS7HSLMT1

TRANOCT_MSC_C7Link

Number of SIF and SIO octets transmitted

Data Source

MSC_IOG20_APG40

Source Field

TRANOCT

Source Section

SS7SLTRAFF

TRANOCT_SS7HSLTRAF

Number of SIF and SIO octets transmitted

© Copyright IBM Corp. 2008, 2009. All Rights Reserved.

Data Source

MSC_IOG20_APG40

Source Field

TRANOCT

Source Section

SS7HSLTRAF

UNAVAILDUR

Duration of SL unavailability (all reasons) in seconds

Data Source

MSC_IOG20_APG40

Source Field

UNAVAILDUR

Source Section

C7SL1

UNAVRBLDUR

Duration of SL unavailability due to remote processor outage in seconds

Data Source

MSC_IOG20_APG40

Source Field

UNAVRBLDUR

Source Section

C7SL1

UNAVSLFDUR

Duration of SL unavailability due to link failure in seconds

Data Source

MSC_IOG20_APG40

Source Field

UNAVSLFDUR

Source Section

C7SL1

UNEXPDUS_SS7HSLMT3

Number of unexpected SSCOP PDUs received

Data Source

MSC_IOG20_APG40

Source Field

UNEXPDUS

Source Section

SS7HSLMT3

MSC_SS7LinkSet Primitive Calculations

The following is a list of primitive calculations for the MSC_SS7LinkSet entity.

C7_LSTL_AvgRX

Average C7 Link Received Traffic (Erlangs)

Calculation

```
mean(MSC_SS7Link, C7_SLTL_RX)
```

C7_LSTL_AvgTX

Average C7 Link Transmitted Traffic (Erlangs)

Calculation

```
mean(MSC_SS7Link, C7_SLTL_TX)
```

Critical_Carried

critical Carried

Calculation

```
0.4
```

© Copyright IBM Corp. 2008, 2009. All Rights Reserved.

DIMENSION

Dimensioning Parameter

Calculation

```
WM_FCAST_DIMENSION(instance_id, TimeAndElement.tstamp)
```

GRAPHmultiLineSeparator

Special Control Field for Multi-Line Graphs

Calculation

```
""
```

GROWTH

The Growth in Erlangs per Week for Linear Regression

Calculation

```
WM_FCAST_GROWTH(instance_id) * 3600 * 24 * 7
```

INTERVALS

Number of 60 minute intervals covered

Calculation

```
PERLEN / (1.0 * 60)
```

Link_Unavailable

Link UnAvailability in LinkSet

Calculation

```
AGGR( MSC_SS7Link, UNAVAILDUR )
```

Link_Usage

Sum of TX and RX Usage

Calculation

```
AGGR(MSC_SS7Link, Link_Usage)
```

Links_Q

Number of assigned SLs (Q aggregator)

Calculation

```
LINKS
```

Ln_Correlation

Correlation co-efficient

Calculation

```
WM_FCAST_CORRELATION(instance_id)
```

Ln_Exhaust_Date

Exhaustion Date based on Critical Traffic

Calculation

```
dateToString(stringToDate(TimeAndElement.tstamp, "%Y-%m-%d") +
(int)(vsum(Critical_Carried, -1.0 * DIMENSION) /
(WM_FCAST_GROWTH(instance_id) * 3600 * 24)), "%Y-%m-%d")
```

Ln_Exhaust_Days

Number of Days until LinkSet Exhausts, based on Critical Traffic

Calculation

```
vsum((int) vsum(Critical_Carried, -1.0 * DIMENSION) /
(WM_FCAST_GROWTH(instance_id) * 3600 * 24), -7)
```

MSUS

Number of MSU received and Transmitted Per LSET

Calculation

```
AGGR(MSC_SS7Link, MSUS)
```

Nominal_Capacity

Nominal Capacity based on specified Max Nominal erlangs Per LSET

Calculation

```
0.4 * NumLinks
```

NSLFA

Number of SL failures, all reasons.

Calculation

```
AGGR(MSC_SS7Link, NSLFA)
```

NumberMSUsReceived

Number of MSU's received

© Copyright IBM Corp. 2008, 2009. All Rights Reserved.

Calculation

```
nullValue(AGGR(MSC_SS7Link,NMSURE_C7SL1),MSURECD)
```

NumberMSUsTransmitted

Number of MSU's transmitted

Calculation

```
null-
Value(AGGR(MSC_SS7Link,NMSUTR_C7SL1),AGGR(MSC_SS7Link,MSUTRAN_MSC_C7Link))
```

NumberSLFailures

Number of SL failures, all reasons

Calculation

```
nullValue(AGGR(MSC_SS7Link,NSLFA),AGGR(MSC_SS7Link,NMDCLFLR))
```

NUMDAYS

of days in Report

Calculation

```
DAYSINREPORT()
```

NUMHOURS

of hours in Summation Data

Calculation

NumLinks

Number of Links Per Linkset

Calculation

```
count(MSC_SS7Link)
```

PercentageLinkAvailability

Signalling Link Unavailability Duration

Calculation

```
100 * (1 - (nullValue(AGGR(MSC_SS7Link, UNAVAILDUR),(AGGR(MSC_SS7Link,DRD-
CLFLR)*10)) / (1.0 * (PERLEN * 60))))
```

PercentageLinksetInService

Percentage Linkset In Service

Calculation

```
(100 * (nullValue(AGGR(MSC_SS7Link,
ASLDUR),(AGGR(MSC_SS7Link,TLNKACTV)*10)) / (1.0 * (PERLEN * 60))))
```

RX_AvgLink

Total (RX) LinkSet Usage per Link

Calculation

```
C7_LSTL_AvgRX / ( 1.0 * NumLinks )
```

RX_MSUS

RX MSUS For all Links

Calculation

```
AGGR(MSC_SS7Link, NMSURE)
```

RX_Octets

RX SIF/SIO Octets for all Links

Calculation

```
AGGR(MSC_SS7Link, NSIFSRE)
```

Sample_Size

The number of Samples in the Regression

Calculation

```
WM_FCAST_SAMPLES(instance_id)
```

TX_AvgLink

Total (TX) LinkSet Usage per Link

Calculation

```
C7_LSTL_AvgTX / ( 1.0 * NumLinks )
```

TX_MSUS

TX MSUS For all Links

Calculation

```
AGGR(MSC_SS7Link, NMSUTR)
```

© Copyright IBM Corp. 2008, 2009. All Rights Reserved.

TX_Octets

TX SIF/SIO Octets for all Links

Calculation

```
AGGR(MSC_SS7Link, NSIFTR)
```

VENDORTECH

Vendor Technology

Calculation

```
isNull( PERLEN ) ? nullString() : "EricssonGSM"
```

MSC_SS7LinkSet Peg Counts

The following is a list of peg counts for the MSC_SS7LinkSet entity.

ASPADUR_MSC

Duration of adjacent SP inaccessible in seconds

Data Source

MSC_IOG20_APG40

Source Field

ASPADUR

Source Section

C7ADJSLP

ASPINA_MSC

Number of occurrences of adjacent SP inaccessible

Data Source

MSC_IOG20_APG40

Source Field

ASPINA

Source Section

C7ADJSLP

AVLINKS

Number of currently available links (ACT)

Data Source

MSC_IOG20_APG40

Source Field

AVLINKS

Source Section

SS7LS

AVLINKS_SS7HSLS

Number of currently available links (ACT)

Data Source

MSC_IOG20_APG40

Source Field

AVLINKS

Source Section

SS7HSLS

CLUSTERCODE_MSC_SS7LS

SS7 Link Cluster code

Data Source

MSC_IOG20_APG40

Source Field

CLUSTERCODE

Source Section

SS7LS

ICUICELS_SS7HSLS

Total number of incoming (received) ATM user information (UI) cells

© Copyright IBM Corp. 2008, 2009. All Rights Reserved.

Data Source

MSC_IOG20_APG40

Source Field

ICUICELS

Source Section

SS7HSLS

INCCELLS_SS7HSLS

Total number of incoming (received) NDC-valid ATM cells

Data Source

MSC_IOG20_APG40

Source Field

INCCELLS

Source Section

SS7HSLS

LINKS

Number of assigned SLs

Data Source

MSC_IOG20_APG40

Source Field

LINKS

Source Section

SS7LS

LINKS_SS7HSLS

Number of assigned signalling links

Data Source

MSC_IOG20_APG40

Source Field

LINKS

Source Section

SS7HSLS

LSMTCST

Maintenance state (same as 'link set service status')

Data Source

MSC_IOG20_APG40

Source Field

LSMTCST

Source Section

SS7LS

LSMTCST_SS7HSLS

Maintenance state (same as 'link set service status')

Data Source

MSC_IOG20_APG40

Source Field

LSMTCST

Source Section

SS7HSLS

MEMBERCODE_MSC_SS7LS

SS7 Cluster Member Code

Data Source

MSC_IOG20_APG40

Source Field

MEMBERCODE

© Copyright IBM Corp. 2008, 2009. All Rights Reserved.

Source Section

SS7LS

MSC_RELEASE

Release

MSGSRCVD_SS7HSLS

Number of MTP3 messages received

Data Source

MSC_IOG20_APG40

Source Field

MSGSRCVD

Source Section

SS7HSLS

MSGSTRAN_SS7HSLS

Number of MTP3 messages transmitted, including those for which retransmissions of SSCOP SD PDUs

Data Source

MSC_IOG20_APG40

Source Field

MSGSTRAN

Source Section

SS7HSLS

MSURECD

Number of MSU's received

Data Source

MSC_IOG20_APG40

Source Field

MSURECD

Source Section

SS7LS

MSURETRN

Number of MSU's retransmitted

Data Source

MSC_IOG20_APG40

Source Field

MSURETRN

Source Section

SS7LS

MSUTRAN

Number of MSU's transmitted, (retransmission not included)

Data Source

MSC_IOG20_APG40

Source Field

MSUTRAN

Source Section

SS7LS

N10SCAN_MSC_C7LinkSet

Number of 10 sec. scans

Data Source

MSC_IOG20_APG40

Source Field

N10SCAN

© Copyright IBM Corp. 2008, 2009. All Rights Reserved.

Source Section

SS7LS

N10SCAN_SS7HSLS

Number of 10 sec scans

Data Source

MSC_IOG20_APG40

Source Field

N10SCAN

Source Section

SS7HSLS

OGUICELS_SS7HSLS

Total number of outgoing (transmitted) ATM user information (UI) cells

Data Source

MSC_IOG20_APG40

Source Field

OGUICELS

Source Section

SS7HSLS

OOSLINKS

Number of links in the Out-of-Service (OSS) Maintenance State

Data Source

MSC_IOG20_APG40

Source Field

OOSLINKS

Source Section

SS7LS

OOSLINKS_SS7HSLS

Number of links in the out-of-service (OOS) maintenance state

Data Source

MSC_IOG20_APG40

Source Field

OOSLINKS

Source Section

SS7HSLS

OUTCELLS_SS7HSLS

Total number of outgoing (transmitted) NDC-valid ATM cells

Data Source

MSC_IOG20_APG40

Source Field

OUTCELLS

Source Section

SS7HSLS

PDUOCTRC_SS7HSLS

Total number of SSCOP PDU octets received

Data Source

MSC_IOG20_APG40

Source Field

PDUOCTRC

Source Section

SS7HSLS

PDUOCTTR_SS7HSLS

Total number of SSCOP PDU octets transmitted

© Copyright IBM Corp. 2008, 2009. All Rights Reserved.

Data Source

MSC_IOG20_APG40

Source Field

PDUOCTTR

Source Section

SS7HSLS

PDUSRCVD_SS7HSLS

Total number of SSCOP PDUs received

Data Source

MSC_IOG20_APG40

Source Field

PDUSRCVD

Source Section

SS7HSLS

PDUSTRAN_SS7HSLS

Total number of SSCOP PDUs transmitted

Data Source

MSC_IOG20_APG40

Source Field

PDUSTRAN

Source Section

SS7HSLS

PERLEN

Period Length

RECVDOCT

Number of SIF and SIO octets received

Data Source

MSC_IOG20_APG40

Source Field

RECVDOCT

Source Section

SS7LS

RECVDOCT_SS7HSLS

Number of SIF and SIO octets for MTP3 messages received

Data Source

MSC_IOG20_APG40

Source Field

RECVDOCT

Source Section

SS7HSLS

RETRNOCT

Number of SIF, SIO, LI, FSN, and BSN octets retransmitted

Data Source

MSC_IOG20_APG40

Source Field

RETRNOCT

Source Section

SS7LS

SDOCTRCV_SS7HSLS

Number of SSCOP SD PDU octets received

Data Source

MSC_IOG20_APG40

© Copyright IBM Corp. 2008, 2009. All Rights Reserved.

Source Field

SDOCTRCV

Source Section

SS7HSLS

SDOCTRTR_SS7HSLS

Number of SSCOP SD PDU octets retransmitted

Data Source

MSC_IOG20_APG40

Source Field

SDOCTRTR

Source Section

SS7HSLS

SDOCTTRN_SS7HSLS

Number of SSCOP SD PDU octets transmitted, including retransmissions

Data Source

MSC_IOG20_APG40

Source Field

SDOCTTRN

Source Section

SS7HSLS

SDPDURCV_SS7HSLS

Number of SSCOP SD PDUs received

Data Source

MSC_IOG20_APG40

Source Field

SDPDURCV

Source Section

SS7HSLS

SDPDURTR_SS7HSLS

Number of SSCOP SD PDUs retransmitted

Data Source

MSC_IOG20_APG40

Source Field

SDPDURTR

Source Section

SS7HSLS

SDPDUTRN_SS7HSLS

Number of SSCOP SD PDUs transmitted, including retransmissions

Data Source

MSC_IOG20_APG40

Source Field

SDPDUTRN

Source Section

SS7HSLS

STUNADURAT_MSC

Duration of unavailability of signalling linkset in seconds

Data Source

MSC_IOG20_APG40

Source Field

STUNADURAT

Source Section

C7SLSET

© Copyright IBM Corp. 2008, 2009. All Rights Reserved.

SYS7IND_MSC_C7ADJSLP

Linkset state

Data Source

MSC_IOG20_APG40

Source Field

SYS7IND

Source Section

C7ADJSLP

SYS7IND_MSC_C7SLSET

Linkset state

Data Source

MSC_IOG20_APG40

Source Field

SYS7IND

Source Section

C7SLSET

TDLSINAC

Total duration of LS inactivity due to no links in LS are active in 10 sec. Units

Data Source

MSC_IOG20_APG40

Source Field

TDLSINAC

Source Section

SS7LS

TDLSINAC_SS7HSLS

Total duration of LS inactivity due to no links in LS are active in 10 sec units

Data Source

MSC_IOG20_APG40

Source Field

TDLSINAC

Source Section

SS7HSLS

TRANOCT

Number of SIF and SIO octets transmitted

Data Source

MSC_IOG20_APG40

Source Field

TRANOCT

Source Section

SS7LS

TRANOCT_SS7HSLS

Number of SIF and SIO octets for MTP3 messages transmitted

Data Source

MSC_IOG20_APG40

Source Field

TRANOCT

Source Section

SS7HSLS

UAVLINKS

Number of links in the Unavailable (UNAV) maintenance state

Data Source

MSC_IOG20_APG40

© Copyright IBM Corp. 2008, 2009. All Rights Reserved.

Source Field

UAVLINKS

Source Section

SS7LS

UAVLINKS_SS7HSLS

Number of links in the unavailable (UNAV) maintenance state

Data Source

MSC_IOG20_APG40

Source Field

UAVLINKS

Source Section

SS7HSLS

MSC_SS7RouteSet Primitive Calculations

The following is a list of primitive calculations for the MSC_SS7RouteSet entity.

C7_RSAV_%

%C7 RouteSet Availability Time

Calculation

```
100 * (1 - (STINADURAT_MSC / (60.0 * NI.MSC.PERLEN)))
```

GRAPHmultiLineSeparator

Special Control Field for Multi-Line Graphs

Calculation

```
""
```

INTERVALS

Number of 60 minute intervals covered

Calculation

```
PERLEN / (1.0 * 60)
```

NUMDAYS

of days in Report

Calculation

```
DAYSINREPORT()
```

NUMHOURS

of hours in Summation Data

Calculation

VENDORTECH

Vendor Technology

Calculation

```
isNull( PERLEN ) ? nullString() : "EricssonGSM"
```

MSC_SS7RouteSet Peg Counts

The following is a list of peg counts for the MSC_SS7RouteSet entity.

MSC_RELEASE

Release

PERLEN

Period Length

STINACNT_MSC

Number of occurrences of unavailability of route set to a given destination

Data Source

MSC_IOG20_APG40

Source Field

STINACNT

Source Section

C7RTSET

© Copyright IBM Corp. 2008, 2009. All Rights Reserved.

STINADURAT_MSC

Duration of unavailability of route set in seconds

Data Source

MSC_IOG20_APG40

Source Field

STINADURAT

Source Section

C7RTSET

SYS7IND_MSC_C7RTSET

Linkset state

Data Source

MSC_IOG20_APG40

Source Field

SYS7IND

Source Section

C7RTSET

MSCOutTrunk Primitive Calculations

The following is a list of primitive calculations for the MSCOutTrunk entity.

GRAPHmultiLineSeparator

Special Control Field for Multi-Line Graphs

Calculation

```
""
```

NUMDAYS

of days in Report

Calculation

```
DAYSINREPORT()
```

NUMHOURS

of hours in Summation Data

Calculation

MSCOutTrunk Peg Counts

The following is a list of peg counts for the MSCOutTrunk entity.

BANSWCNT

Number of B - answers

CONVLACC

Accumulated traffic level after B - answer

IDISCCNT

Number of rejected calls

MSC_RELEASE

Release

OCONGCNT

Number of unsuccessful seizure attempts of outgoing individual

ODISCCNT

Number of disconnections of outgoing individual in register position

OTTIME

Accumulated seizure time of outgoing individual in register position

PERLENSEC

Period Length

SCANCNT

Number of accumulations of the level counters

SCANNINT

Interval between scannings in seconds

© Copyright IBM Corp. 2008, 2009. All Rights Reserved.

THCONCNT

Number of through connections

TRALACC

Accumulated traffic level after through connection

MSCTrunkDest Primitive Calculations

The following is a list of primitive calculations for the MSCTrunkDest entity.

BANSWCNT_TrunkDest

Number of B - answers

Calculation

```
nullValue(BANSWCNT, AGGR(MSCOutTrunk, BANSWCNT))
```

CONVLACC_TrunkDest

Accumulated traffic level after B - answer

Calculation

```
nullValue(CONVLACC, AGGR(MSCOutTrunk, CONVLACC))
```

DestinationTraffic_AfterBAnsw

Traffic in Erlang from B-answer to release

Calculation

```
CONVLACC_TrunkDest / SCANCNT_TrunkDest
```

DestinationTraffic_BeforeBAnsw

Traffic in Erlang from reaching the EOS state waiting for B-answer to release.

Calculation

```
TRALACC_TrunkDest / SCANCNT_TrunkDest
```

GRAPHmultiLineSeparator

Special Control Field for Multi-Line Graphs

Calculation

```
""
```

Updated: 2009-07-22

IDISCCNT_TrunkDest

Number of rejected calls

Calculation

```
nullValue(IDISCCNT, AGGR(MSCOutTrunk, IDISCCNT))
```

INTERVALS_TRDIP

Number of 60 minute intervals covered (from TRDIP data)

Calculation

```
PERLEN_TRDIP / (1.0 * 60)
```

NUMDAYS

of days in Report

Calculation

```
DAYSINREPORT()
```

NUMHOURS

of hours in Summation Data

Calculation

OCONGCNT_TrunkDest

Number of unsuccessful seizure attempts of outgoing individual

Calculation

```
nullValue(OCONGCNT, AGGR(MSCOutTrunk, OCONGCNT))
```

ODISCCNT_TrunkDest

Number of disconnections of outgoing individual in register position

Calculation

```
nullValue(ODISCCNT, AGGR(MSCOutTrunk, ODISCCNT))
```

OTTIME_TrunkDest

Accumulated seizure time of outgoing individual in register position

Calculation

```
nullValue(OTTIME, AGGR(MSCOutTrunk, OTTIME))
```

© Copyright IBM Corp. 2008, 2009. All Rights Reserved.

SCANCNT_TrunkDest

Number of accumulations of the level counters

Calculation

```
nullValue(SCANCNT, AGGR(MSCOutTrunk, SCANCNT) * 1.0 / count(MSCOutTrunk))
```

SCANNINT_TrunkDest

Interval between scannings in seconds

Calculation

```
nullValue(SCANNINT, AGGR(MSCOutTrunk, SCANNINT))
```

THCONCNT_TrunkDest

Number of through connections

Calculation

```
nullValue(THCONCNT, AGGR(MSCOutTrunk, THCONCNT))
```

TRALACC_TrunkDest

Accumulated traffic level after through connection

Calculation

```
nullValue(TRALACC, AGGR(MSCOutTrunk, TRALACC))
```

MSCTrunkDest Peg Counts

The following is a list of peg counts for the MSCTrunkDest entity.

BANSWCNT

Number of B - answers

Data Source

MSC_TRDIP

Source Field

BANSWCNT

Source Section

ASC_TRDIP

CONVLACC

Accumulated traffic level after B - answer

Data Source

MSC_TRDIP

Source Field

CONVLACC

Source Section

ASC_TRDIP

IDISCCNT

Number of rejected calls

Data Source

MSC_TRDIP

Source Field

IDISCCNT

Source Section

ASC_TRDIP

MSC_Release

Release

OCONGCNT

Number of unsuccessful seizure attempts of outgoing individual

Data Source

MSC_TRDIP

Source Field

OCONGCNT

Source Section

ASC_TRDIP

© Copyright IBM Corp. 2008, 2009. All Rights Reserved.

ODISCCNT

Number of disconnections of outgoing individual in register position

Data Source

MSC_TRDIP

Source Field

ODISCCNT

Source Section

ASC_TRDIP

OTTIME

Accumulated seizure time of outgoing individual in register position

Data Source

MSC_TRDIP

Source Field

OTTIME

Source Section

ASC_TRDIP

PERLEN_TRDIP

Period Length (of TRDIP data)

SCANCNT

Number of accumulations of the level counters

Data Source

MSC_TRDIP

Source Field

SCANCNT

Source Section

ASC_TRDIP

SCANNINT

Interval between scannings in seconds

Data Source

MSC_TRDIP

Source Field

SCANNINT

Source Section

ASC_TRDIP

THCONCNT

Number of through connections

Data Source

MSC_TRDIP

Source Field

THCONCNT

Source Section

ASC_TRDIP

TRALACC

Accumulated traffic level after through connection

Data Source

MSC_TRDIP

Source Field

TRALACC

Source Section

ASC_TRDIP

MSCTrunkType Primitive Calculations

The following is a list of primitive calculations for the MSCTrunkType entity.

© Copyright IBM Corp. 2008, 2009. All Rights Reserved.

GRAPHmultiLineSeparator

Special Control Field for Multi-Line Graphs

Calculation

```
""
```

INTERVALS

Number of 60 minute intervals covered

Calculation

```
PERLEN / (1.0 * 60)
```

LocalName

MSCTrunkType Name

Calculation

```
LocalKey
```

NUMDAYS

of days in Report

Calculation

```
DAYSINREPORT()
```

NUMHOURS

of hours in Summation Data

Calculation

VENDORTECH

Vendor Technology

Calculation

```
isNull( PERLEN ) ? nullString() : "EricssonGSM"
```

MSCTrunkType Peg Counts

The following is a list of peg counts for the MSCTrunkType entity.

MSC_RELEASE

Release

NDISS

Number of disturbances

Data Source

MSC_IOG20_APG40

Source Field

NDISS

Source Section

TRUNKSUP

NDISSBLOC

Number of blockings

Data Source

MSC_IOG20_APG40

Source Field

NDISSBLOC

Source Section

TRUNKSUP

NFAUSBLOC

Number of signalling faults

Data Source

MSC_IOG20_APG40

Source Field

NFAUSBLOC

Source Section

TRUNKSUP

© Copyright IBM Corp. 2008, 2009. All Rights Reserved.

NNOTSEIZE

Number of not seized trunks

Data Source

MSC_IOG20_APG40

Source Field

NNOTSEIZE

Source Section

TRUNKSUP

NQUAS

Number of indications

Data Source

MSC_IOG20_APG40

Source Field

NQUAS

Source Section

TRUNKSUP

NQUASBLOC

Number of blockings

Data Source

MSC_IOG20_APG40

Source Field

NQUASBLOC

Source Section

TRUNKSUP

PERLEN

Period Length

Multiplex_Section Primitive Calculations

The following is a list of primitive calculations for the Multiplex_Section entity.

GRAPHmultiLineSeparator

Special Control Field for Multi-Line Graphs

Calculation

```
""
```

LocalName

Higher_Order_Path ID

Calculation

```
LocalKey
```

NUMDAYS

of days in Report

Calculation

```
DAYSINREPORT()
```

NUMHOURS

of hours in Summation Data

Calculation

Multiplex_Section Peg Counts

The following is a list of peg counts for the Multiplex_Section entity.

MSFBBE

Number of background block errors multiplex section far end

Data Source

BSC_IOG20_APG40

Source Field

MSFBBE

© Copyright IBM Corp. 2008, 2009. All Rights Reserved.

Source Section

SDIPMS

MSFES

Number of errored seconds far end multiplex section

Data Source

BSC_IOG20_APG40

Source Field

MSFES

Source Section

SDIPMS

MSFSES

Number of severely errored seconds far end multiplex section

Data Source

BSC_IOG20_APG40

Source Field

MSFSES

Source Section

SDIPMS

MSFUAS

Number of unavailable seconds far end multiplex section

Data Source

BSC_IOG20_APG40

Source Field

MSFUAS

Source Section

SDIPMS

MSFUAV

Number of unavailable events far end multiplex section

Data Source

BSC_IOG20_APG40

Source Field

MSFUAV

Source Section

SDIPMS

MSNBBE

Number of background block errors multiplex section near end

Data Source

BSC_IOG20_APG40

Source Field

MSNBBE

Source Section

SDIPMS

MSNES

Number of errored seconds near end multiplex section.

Data Source

BSC_IOG20_APG40

Source Field

MSNES

Source Section

SDIPMS

MSNSES

Number of severely errored seconds near end multiplex section

© Copyright IBM Corp. 2008, 2009. All Rights Reserved.

Data Source

BSC_IOG20_APG40

Source Field

MSNSES

Source Section

SDIPMS

MSNUAS

Number of unavailable seconds near end multiplex section

Data Source

BSC_IOG20_APG40

Source Field

MSNUAS

Source Section

SDIPMS

MSNUAV

Number of unavailable events near end multiplex section

Data Source

BSC_IOG20_APG40

Source Field

MSNUAV

Source Section

SDIPMS

PERLEN

Period Length

SMI

Flag indicating if any suspect marked intervals occured during 24 h measurement period multiplex section

Data Source

BSC_IOG20_APG40

Source Field

SMI

Source Section

SDIPMS

NB_MSC Primitive Calculations

The following is a list of primitive calculations for the NB_MSC entity.

GRAPHmultiLineSeparator

Special Control Field for Multi-Line Graphs

Calculation

```
""
```

INTERVALS

Number of 60 minute intervals covered

Calculation

```
PERLEN / (1.0 * 60)
```

LocalName

NB_MSC Name

Calculation

```
LocalKey
```

NUMDAYS

of days in Report

Calculation

```
DAYSINREPORT()
```

© Copyright IBM Corp. 2008, 2009. All Rights Reserved.

NUMHOURS

of hours in Summation Data

Calculation

VENDORTECH

Vendor Technology

Calculation

```
isNull( PERLEN ) ? nullString() : "EricssonGSM"
```

NB_MSC Peg Counts

The following is a list of peg counts for the NB_MSC entity.

MSC_RELEASE

Release

NBIRASDHTOT

Number of incoming relocation signaling to signaling attempts from neighboring MSC (incoming handovers include basic relocations and subsequent relocations from neighboring MSC.

Data Source

MSC_IOG20_APG40

Source Field

NBIRASDHTOT

Source Section

NBRMSCSRNS

NBIRATCHTOT

Number of incoming relocation traffic to traffic attempts from neighboring MSC (incoming handovers include basic relocations and subsequent relocations from neighboring MSC).

Data Source

MSC_IOG20_APG40

Source Field

NBIRATCHTOT

Source Section

NBRMSCSRNS

NBNSCASUCC

A successful channel assignment should be counted in non-anchor MSC, if RANAP RAB ASSIGNMENT COMPLETE message is sent on the E-interface and if the B-answer is sent on the PSTN/ISDN.

Data Source

MSC_IOG20_APG40

Source Field

NBNSCASUCC

Source Section

NBRMSCSRNS

NBNSCATOT

In a subsequent channel assignment attempt should be counted in non-anchor MSC, when the request for the handover number is received.

Data Source

MSC_IOG20_APG40

Source Field

NBNSCATOT

Source Section

NBRMSCSRNS

NBORASDHTOT

Number of subsequent relocation signaling to signaling attempts to neighboring MSC (back to anchor or to third MSC).

Data Source

MSC_IOG20_APG40

© Copyright IBM Corp. 2008, 2009. All Rights Reserved.

Source Field

NBORASDHTOT

Source Section

NBRMSCSRNS

NBORATCHTOT

Number of subsequent relocation traffic to traffic attempts to neighboring MSC (back to anchor or to third MSC).

Data Source

MSC_IOG20_APG40

Source Field

NBORATCHTOT

Source Section

NBRMSCSRNS

NBRASDHTOT

Number of basic RELOCATION signaling to signaling attempts to neighboring MSC.

Data Source

MSC_IOG20_APG40

Source Field

NBRASDHTOT

Source Section

NBRMSCSRNS

NBRATCHTOT

Number of basic RELOCATION traffic to traffic attempts to neighboring MSC.

Data Source

MSC_IOG20_APG40

Source Field

NBRATCHTOT

Source Section

NBRMSCSRNS

NBRSASDHSUCC

Number of successful basic relocation signaling to signaling to neighboring MSC.

Data Source

MSC_IOG20_APG40

Source Field

NBRSASDHSUCC

Source Section

NBRMSCSRNS

NBRSATCHSUCC

Number of successful basic relocation traffic to traffic to neighboring MSC.

Data Source

MSC_IOG20_APG40

Source Field

NBRSATCHSUCC

Source Section

NBRMSCSRNS

NBSCHASUCC

A subsequent channel assignment Success should be counted in anchor MSC, when the request for the handover number is sent.

Data Source

MSC_IOG20_APG40

© Copyright IBM Corp. 2008, 2009. All Rights Reserved.

Source Field

NBSCHASUCC

Source Section

NBRMSCSRNS

NBSCHATOT

A subsequent channel assignment attempt should be counted in anchor MSC, when the request for the handover number is sent.

Data Source

MSC_IOG20_APG40

Source Field

NBSCHATOT

Source Section

NBRMSCSRNS

NBSIRASDHSUCC

Number of successful incoming relocations signaling to signaling from neighboring MSC (incoming handovers include basic handovers and subsequent handovers from neighboring MSC)

Data Source

MSC_IOG20_APG40

Source Field

NBSIRASDHSUCC

Source Section

NBRMSCSRNS

NBSIRATCHSUCC

Number of successful incoming relocations traffic to traffic from neighboring MSC (incoming handovers include basic handovers and subsequent handovers from neighboring MSC).

Data Source

MSC_IOG20_APG40

Source Field

NBSIRATCHSUCC

Source Section

NBRMSCSRNS

NBSORASDHSUCC

Number of successful subsequent relocations signaling to signaling to neighboring MSC (back to anchor or to third MSC).

Data Source

MSC_IOG20_APG40

Source Field

NBSORASDHSUCC

Source Section

NBRMSCSRNS

NBSORATCHSUCC

Number of successful subsequent relocations traffic to traffic to neighboring MSC (back to anchor or to third MSC).

Data Source

MSC_IOG20_APG40

Source Field

NBSORATCHSUCC

Source Section

NBRMSCSRNS

NBSRASDHTOT

Number of subsequent relocation signaling to signaling attempts from neighboring MSC back to anchor MSC for each neighboring MSC.

Data Source

MSC_IOG20_APG40

© Copyright IBM Corp. 2008, 2009. All Rights Reserved.

Source Field

NBSRASDHTOT

Source Section

NBRMSCSRNS

NBSRATCHTOT

Number of subsequent relocation traffic to traffic attempts from neighboring MSC back to anchor MSC for each neighboring MSC.

Data Source

MSC_IOG20_APG40

Source Field

NBSRATCHTOT

Source Section

NBRMSCSRNS

NBSRATSDHTOT

Number of subsequent relocation signaling to signaling attempts from neighboring MSC to third MSC for each neighboring MSC.

Data Source

MSC_IOG20_APG40

Source Field

NBSRATSDHTOT

Source Section

NBRMSCSRNS

NBSRATTCHTOT

Number of subsequent relocation traffic to traffic attempts from neighboring MSC to third MSC for each neighboring MSC.

Data Source

MSC_IOG20_APG40

Source Field

NBSRATTCHTOT

Source Section

NBRMSCSRNS

NBSSRAATCHSUCC

Number of successful subsequent relocation traffic to traffic from neighboring MSC back to anchor MSC for each neighboring MSC.

Data Source

MSC_IOG20_APG40

Source Field

NBSSRAATCHSUCC

Source Section

NBRMSCSRNS

NBSSRASDHSUCC

Number of successful subsequent relocation signaling to signaling from neighboring MSC back to anchor MSC for each neighboring MSC.

Data Source

MSC_IOG20_APG40

Source Field

NBSSRASDHSUCC

Source Section

NBRMSCSRNS

NBSSRATSDHSUCC

Number of successful subsequent relocation signaling to signaling from neighboring MSC to third MSC for each neighboring MSC.

Data Source

MSC_IOG20_APG40

© Copyright IBM Corp. 2008, 2009. All Rights Reserved.

Source Field

NBSSRATSDHSUCC

Source Section

NBRMSCSRNS

NBSSRATTCHSUCC

Number of successful subsequent relocation traffic to traffic from neighboring MSC to third MSC for each neighboring MSC.

Data Source

MSC_IOG20_APG40

Source Field

NBSSRATTCHSUCC

Source Section

NBRMSCSRNS

NCELHNDSUCC

Number of successful handovers to the target cell from this serving cell.

Data Source

MSC_IOG20_APG40

Source Field

NCELHNDSUCC

Source Section

NBRCELLST

NCELHNDTOT

Number of handover attempts to the target cell from this serving cell

Data Source

MSC_IOG20_APG40

Source Field

NCELHNDTOT

Source Section

NBRCELLST

NNBRBUGASCSUCC

Nr of succ basic UMTS to GSM hos on signalling chs to neighbouring MSC/VLR

Data Source

MSC_IOG20_APG40

Source Field

NNBRBUGASCSUCC

Source Section

NBRMSCUGHO

NNBRBUGASCTOT

Nr of basic UMTS to GSM ho attempts on signalling chs to neighbouring MSC/VLR

Data Source

MSC_IOG20_APG40

Source Field

NNBRBUGASCTOT

Source Section

NBRMSCUGHO

NNBRBUGASUCC

Number of successful basic UMTS to GSM handovers to neighbouring MSC/VLR server

Data Source

MSC_IOG20_APG40

Source Field

NNBRBUGASUCC

© Copyright IBM Corp. 2008, 2009. All Rights Reserved.

Source Section

NBRMSCUGHO

NNBRBUGATOT

Number of basic UMTS to GSM handover attempts to neighbouring MSC/VLR server

Data Source

MSC_IOG20_APG40

Source Field

NNBRBUGATOT

Source Section

NBRMSCUGHO

NNBRBUGSTSUCC

Nr of succ basic hos from signalling ch to traffic ch to neighbouring MSC

Data Source

MSC_IOG20_APG40

Source Field

NNBRBUGSTSUCC

Source Section

NBRMSCUGHO

NNBRBUGSTTOT

Nr of basic ho attempts from signalling ch to traffic ch to neighbouring MSC

Data Source

MSC_IOG20_APG40

Source Field

NNBRBUGSTTOT

Source Section

NBRMSCUGHO

NNBRHBAISDHSUCC

Number of successful incoming handovers on signalling channels from neighboring MSC.

Data Source

MSC_IOG20_APG40

Source Field

NNBRHBAISDHSUCC

Source Section

NBRMSCLST

NNBRHBAISDHTOT

incoming handover attempts on signalling channels from neighboring MSC.Incremented after identification of target and serving cell

Data Source

MSC_IOG20_APG40

Source Field

NNBRHBAISDHTOT

Source Section

NBRMSCLST

NNBRHBANSUCC

Number of successful basic handovers to a neighbouring MSC

Data Source

MSC_IOG20_APG40

Source Field

NNBRHBANSUCC

Source Section

NBRMSCLST

© Copyright IBM Corp. 2008, 2009. All Rights Reserved.

NNBRHBANTOT

Number of basic handover attempts to a neighbouring MSC

Data Source

MSC_IOG20_APG40

Source Field

NNBRHBANTOT

Source Section

NBRMSCLST

NNBRHBAOSDHSUCC

Number of successful basic handovers on signalling channels (SDCCH) to a neighbouring MSC

Data Source

MSC_IOG20_APG40

Source Field

NNBRHBAOSDHSUCC

Source Section

NBRMSCLST

NNBRHBAOSDHTOT

Number of basic handover attempts on signalling channels (SDCCH) to a neighbouring MSC

Data Source

MSC_IOG20_APG40

Source Field

NNBRHBAOSDHTOT

Source Section

NBRMSCLST

NNBRHBSTSUCC

Number of successful basic handovers to a neighbouring MSC from SDCCH to TCH

Data Source

MSC_IOG20_APG40

Source Field

NNBRHBSTSUCC

Source Section

NBRMSCLST

NNBRHBSTTOT

Number of basic handover attempts to a neighbouring MSC from SDCCH to TCH

Data Source

MSC_IOG20_APG40

Source Field

NNBRHBSTTOT

Source Section

NBRMSCLST

NNBRHBTTSUCC

Number of successful basic handovers to a neighbouring MSC on TCH before through connection

Data Source

MSC_IOG20_APG40

Source Field

NNBRHBTTSUCC

Source Section

NBRMSCLST

NNBRHBTTTOT

Number of basic handover attempts to neighbouring MSC on TCH before through connection

© Copyright IBM Corp. 2008, 2009. All Rights Reserved.

Data Source

MSC_IOG20_APG40

Source Field

NNBRHBTTTOT

Source Section

NBRMSCLST

NNBRHINASUCC

Number of successful incoming handovers from neighboring MSC on signalling and traffic channels

Data Source

MSC_IOG20_APG40

Source Field

NNBRHINASUCC

Source Section

NBRMSCLST

NNBRHINATOT

Number of incoming handover attempts from neighboring MSC on signalling and traffic channels

Data Source

MSC_IOG20_APG40

Source Field

NNBRHINATOT

Source Section

NBRMSCLST

NNBRHSANSUCC

Number of successful subsequent handovers from the neighbouring MSC back to anchor MSC

Data Source

MSC_IOG20_APG40

Source Field

NNBRHSANSUCC

Source Section

NBRMSCLST

NNBRHSANTOT

Number of subsequent handover attempts from neighbouring MSC back to anchor MSC

Data Source

MSC_IOG20_APG40

Source Field

NNBRHSANTOT

Source Section

NBRMSCLST

NNBRHSISDHSUCC

successful subsequent handovers on signalling channels (SDCCH), from neighbouring MSC back to anchor MSC, for each serving MSC

Data Source

MSC_IOG20_APG40

Source Field

NNBRHSISDHSUCC

Source Section

NBRMSCLST

NNBRHSISDHTOT

subsequent handover attempts on signalling channels (SDCCH), from neighbouring MSC back to anchor MSC for each serving MSC

© Copyright IBM Corp. 2008, 2009. All Rights Reserved.

Data Source

MSC_IOG20_APG40

Source Field

NNBRHSISDHTOT

Source Section

NBRMSCLST

NNBRHSNASUCC

Number of successful subsequent handovers to a neighboring MSC (back to anchor or to a third MSC)

Data Source

MSC_IOG20_APG40

Source Field

NNBRHSNASUCC

Source Section

NBRMSCLST

NNBRHSNATOT

Number of subsequent handover attempts to a neighboring MSC (back to anchor or to a third MSC)

Data Source

MSC_IOG20_APG40

Source Field

NNBRHSNATOT

Source Section

NBRMSCLST

NNBRHSOSDHSUCC

Number of successful subsequent handovers on signalling channels to a neighboring MSC (back to anchor or to a third MSC)

Data Source

MSC_IOG20_APG40

Source Field

NNBRHSOSDHSUCC

Source Section

NBRMSCLST

NNBRHSOSDHTOT

subsequent handover attempts on signalling channels to a neighboring MSC (back to anchor or to a third MSC)

Data Source

MSC_IOG20_APG40

Source Field

NNBRHSOSDHTOT

Source Section

NBRMSCLST

NNBRHTHISDHSUCC

successful subsequent handovers on signalling channels (SDCCH), from a neighbouring MSC to a third MSC

Data Source

MSC_IOG20_APG40

Source Field

NNBRHTHISDHSUCC

Source Section

NBRMSCLST

NNBRHTHISDHTOT

subsequent handover attempts on signalling channels (SDCCH), from a neighbouring MSC to a third MSC

© Copyright IBM Corp. 2008, 2009. All Rights Reserved.

Data Source

MSC_IOG20_APG40

Source Field

NNBRHTHISDHTOT

Source Section

NBRMSCLST

NNBRHTHISUCC

Number of successful subsequent handovers from neighbouring MSC to a third MSC

Data Source

MSC_IOG20_APG40

Source Field

NNBRHTHISUCC

Source Section

NBRMSCLST

NNBRHTHITOT

Number of subsequent handover attempts from neighbouring MSC to a third MSC

Data Source

MSC_IOG20_APG40

Source Field

NNBRHTHITOT

Source Section

NBRMSCLST

NNBRIHOATCHTOT

Number of incoming handover attempts from neighboring MSC (incoming handovers include basic handovers and subsequent handovers from neighboring MSC), in case the call type is traffic to traffic and the HO is WCDMA to GSM.

Data Source

MSC_IOG20_APG40

Source Field

NNBRIHOATCHTOT

Source Section

NBRMSCUGHO

NNBRISDHHOATOT

Number of incoming handover attempts from signaling to signaling channel from neighboring MSC (incoming handovers include basic relocations and subsequent relocations from neighboring MSC), in case the call type is signaling to signaling and the HO is WCD

Data Source

MSC_IOG20_APG40

Source Field

NNBRISDHHOATOT

Source Section

NBRMSCUGHO

NNBRITCHHOASUCC

Number of successful incoming handovers from signaling to signaling channel from neighboring MSC (incoming handovers include basic handovers and subsequent handovers from neighboring MSC), in case the call type is signaling to signaling and the HO is WCDM

Data Source

MSC_IOG20_APG40

Source Field

NNBRITCHHOASUCC

Source Section

NBRMSCUGHO

© Copyright IBM Corp. 2008, 2009. All Rights Reserved.

NNBRNSUGSCASUCC

A successful channel assignment should be counted in non-anchor MSC, if BSSMAP ASSIGNMENT COMPLETE message is sent on the E-interface and if the B-answer is sent on the PSTN/ISDN.

Data Source

MSC_IOG20_APG40

Source Field

NNBRNSUGSCASUCC

Source Section

NBRMSCUGHO

NNBRNUGSCATOT

A subsequent channel assignment attempt should be counted in non- anchor MSC, when the request for the handover number is received.

Data Source

MSC_IOG20_APG40

Source Field

NNBRNUGSCATOT

Source Section

NBRMSCUGHO

NNBRSCHARSUCC

Number of successful subsequent channel assignments using a circuit connection to a neighboring MSC

Data Source

MSC_IOG20_APG40

Source Field

NNBRSCHARSUCC

Source Section

NBRMSCLST

NNBRSCHARTOT

Number of subsequent TCH assignment attempts using a circuit connection to neighboring MSC

Data Source

MSC_IOG20_APG40

Source Field

NNBRSCHARTOT

Source Section

NBRMSCLST

NNBRSCHASSUCC

successfully sent subsequent TCH assignments using a circuit connection to neighbouring MSC

Data Source

MSC_IOG20_APG40

Source Field

NNBRSCHASSUCC

Source Section

NBRMSCLST

NNBRSCHASTOT

Number of sent subsequent TCH assignment attempts using a circuit connection to neighbouring MSC

Data Source

MSC_IOG20_APG40

Source Field

NNBRSCHASTOT

Source Section

NBRMSCLST

© Copyright IBM Corp. 2008, 2009. All Rights Reserved.

NNBRSIHOATCHSUCC

Number of successful incoming handover attempts from neighboring MSC (incoming handovers include basic handovers and subsequent handovers from neighboring MSC), in case the call type is traffic to traffic and the HO is WCDMA to GSM.

Data Source

MSC_IOG20_APG40

Source Field

NNBRSIHOATCHSUCC

Source Section

NBRMSCUGHO

NNBRSUGSCASUCC

A successful subsequent channel assignment should be counted in anchor MSC, if BSSMAP ASSIGNMENT COMPLETE message is received on the E-interface and if the B-answer is received on the PSTN/ISDN.

Data Source

MSC_IOG20_APG40

Source Field

NNBRSUGSCASUCC

Source Section

NBRMSCUGHO

NNBRSUGSSUCC

Nr of succ subsequent UMTS to GSM hos on signalling ch to neigh MSC

Data Source

MSC_IOG20_APG40

Source Field

NNBRSUGSSUCC

Source Section

NBRMSCUGHO

NNBRSUGSTOT

Nr of subsequent UMTS to GSM ho attemps on signalling ch to neigh MSC

Data Source

MSC_IOG20_APG40

Source Field

NNBRSUGSTOT

Source Section

NBRMSCUGHO

NNBRSUGSUCC

Nr of succ subsequent UMTS to GSM hos to neigh MSC

Data Source

MSC_IOG20_APG40

Source Field

NNBRSUGSUCC

Source Section

NBRMSCUGHO

NNBRSUGTOT

Nr of subsequent UMTS to GSM ho attemps to neigh MSC

Data Source

MSC_IOG20_APG40

Source Field

NNBRSUGTOT

Source Section

NBRMSCUGHO

© Copyright IBM Corp. 2008, 2009. All Rights Reserved.

NNBRUGSCATOT

A subsequent channel assignment attempt should be counted in anchor MSC, when the request for the handover number is sent.

Data Source

MSC_IOG20_APG40

Source Field

NNBRUGSCATOT

Source Section

NBRMSCUGHO

NNGSUSCASUCC

A successful subsequent channel assignment should be counted in anchor MSC, if BSSMAP ASSIGNMENT COMPLETE message is received on the E-interface and if the B-answer is received on the PSTN/ISDN.

Data Source

MSC_IOG20_APG40

Source Field

NNGSUSCASUCC

Source Section

NBRMSCGUH

NNGUHASUCC

Nr of succ subsequent GSM to UMTS ho from neigh MSC back to anchor MSC/VLR

Data Source

MSC_IOG20_APG40

Source Field

NNGUHASUCC

Source Section

NBRMSCGUH

NNGUHATOT

Nr of subsequent GSM to UMTS ho att from neigh MSC back to anchor MSC/VLR

Data Source

MSC_IOG20_APG40

Source Field

NNGUHATOT

Source Section

NBRMSCGUH

NNGUHBSUCC

Number of successful basic GSM to UMTS handovers attempts to neighbouring MSC

Data Source

MSC_IOG20_APG40

Source Field

NNGUHBSUCC

Source Section

NBRMSCGUH

NNGUHBTOT

Number of basic GSM to UMTS handovers

Data Source

MSC_IOG20_APG40

Source Field

NNGUHBTOT

Source Section

NBRMSCGUH

NNGUHISSUCC

Nr of succ incoming GSM to UMTS hos on signalling ch from neigh MSC

© Copyright IBM Corp. 2008, 2009. All Rights Reserved.

Data Source

MSC_IOG20_APG40

Source Field

NNGUHISSUCC

Source Section

NBRMSCGUH

NNGUHISTOT

Nr of inc GSM to UMTS ho attempts on sign ch from neigh MSC

Data Source

MSC_IOG20_APG40

Source Field

NNGUHISTOT

Source Section

NBRMSCGUH

NNGUHISUCC

Nr of succ incoming GSM to UMTS hos from neigh MSC

Data Source

MSC_IOG20_APG40

Source Field

NNGUHISUCC

Source Section

NBRMSCGUH

NNGUHITOT

Nr of incoming GSM to UMTS ho attempts from neigh MSC

Data Source

MSC_IOG20_APG40

Source Field

NNGUHITOT

Source Section

NBRMSCGUH

NNGUHSSSUCC

Nr of succ basic GSM to UMTS hos from signalling to signalling ch to neigh MSC

Data Source

MSC_IOG20_APG40

Source Field

NNGUHSSSUCC

Source Section

NBRMSCGUH

NNGUHSSTOT

Nr of basic GSM to UMTS ho att from signalling to signalling ch to neigh MSC

Data Source

MSC_IOG20_APG40

Source Field

NNGUHSSTOT

Source Section

NBRMSCGUH

NNGUHSSUCC

Nr of succ subs GSM to UMTS hos on sign ch from neigh MSC back to anch MSC/VLR

Data Source

MSC_IOG20_APG40

Source Field

NNGUHSSUCC

© Copyright IBM Corp. 2008, 2009. All Rights Reserved.

Source Section

NBRMSCGUH

NNGUHSTOT

Nr of subse GSM to UMTS ho att on sign ch from neigh MSC back to anchor MSC/VLR

Data Source

MSC_IOG20_APG40

Source Field

NNGUHSTOT

Source Section

NBRMSCGUH

NNGUHTSSUCC

Nr of succ subs GSM to UMTS ho from sign to sign ch from neigh MSC to third MSC

Data Source

MSC_IOG20_APG40

Source Field

NNGUHTSSUCC

Source Section

NBRMSCGUH

NNGUHTSTOT

Nr of subs GSM to UMTS ho att from sign to sign ch from neigh MSC to third MSC

Data Source

MSC_IOG20_APG40

Source Field

NNGUHTSTOT

Source Section

NBRMSCGUH

NNGUHTSUCC

Nr of succ subsequent GSM to UMTS hos from neigh MSC to third MSC

Data Source

MSC_IOG20_APG40

Source Field

NNGUHTSUCC

Source Section

NBRMSCGUH

NNGUHTTOT

Nr of subsequent GSM to UMTS ho attemps from neigh MSC to third MSC

Data Source

MSC_IOG20_APG40

Source Field

NNGUHTTOT

Source Section

NBRMSCGUH

NNGUSCATOT

Number of subsequent traffic channel assignment attempts using a circuit connection to neighboring MSC.

Data Source

MSC_IOG20_APG40

Source Field

NNGUSCATOT

Source Section

NBRMSCGUH

© Copyright IBM Corp. 2008, 2009. All Rights Reserved.

NNGUSTSUCC

Nr of succ basic GSM to UMTS hos from signalling to traffic channel

Data Source

MSC_IOG20_APG40

Source Field

NNGUSTSUCC

Source Section

NBRMSCGUH

NNGUSTTOT

Nr of basic GSM to UMTS ho attempts from signalling to traffic channel

Data Source

MSC_IOG20_APG40

Source Field

NNGUSTTOT

Source Section

NBRMSCGUH

NNSCHASUCC

Number of successful subsequent channel assignments using a circuit connection

Data Source

MSC_IOG20_APG40

Source Field

NNSCHASUCC

Source Section

NBRMSCLST

NNSCHATOT

Number of subsequent channel assignment attempts using a circuit connection to neighbouring MSC after GSM to UMTS handover

Data Source

MSC_IOG20_APG40

Source Field

NNSCHATOT

Source Section

NBRMSCLST

PERLEN

Period Length

NBCell Primitive Calculations

The following is a list of primitive calculations for the NBCell entity.

GRAPHmultiLineSeparator

Special Control Field for Multi-Line Graphs

Calculation

```
""
```

HO_CAUSEALL

Number of Handovers (All Causes)

Calculation

```
vsum(HOTOKCL, HOTOLCL, HODWNQA, HOUPLQA, HOEXCTA, HOATTLSS, HOATTHSS)
```

HO_DIRRETRY

Number of Handovers Due to Directed Retry

Calculation

```
nullFloat()
```

HO_DWNLKLVL

Number of Handovers Due to Downlink Level

© Copyright IBM Corp. 2008, 2009. All Rights Reserved.

Calculation

```
nullFloat()
```

HO_LOST

MS lost during handover

Calculation

```
vsum(HOVERCNT, -1 * HORTTOCH, -1 * HOVERSUC)
```

HO_SUC%

Percentage successful handovers

Calculation

```
HOVERSUC * 100.0 / HOVERCNT
```

HO_SUCBTCEL%

Percentage of successful assignment HO to better cell

Calculation

```
HOSUCBCL * 100.0 / HOASBCL
```

HO_SUCHIHR%

Percentage of successful HO at High HO Rate

Calculation

```
HOSUCHR * 100.0 / HOATTHR
```

HO_SUCWRCEL%

Percentage of successful assignment HO to worse cell

Calculation

```
HOSUCWCL * 100.0 / HOASWCL
```

HO_UPLNKLVL

Number of Handovers Due to Uplink Level

Calculation

```
nullFloat()
```

HOE_LOST

MS lost at BSC external handover

Calculation

```
protect(decode(NBTYPE,"E", vsum(HOVERCNT, -1 * HORTTOCH, -1 * HOVERSUC),
nullFloat()))
```

HOE_LOST%

MS lost at BSC external handover %

Calculation

```
100 * protect(decode(NBTYPE,"E", vsum(HOVERCNT, -1 * HORTTOCH, -1 * HOVER-
SUC), nullFloat())) / (1.0 * protect(decode(NBTYPE,"E", HOVERCNT, null-
Float())))
```

HOE_SUC

BSC external handover successful attempts

Calculation

```
protect(decode(NBTYPE,"E", HOVERSUC, nullFloat() ))
```

HOE_TOT

BSC external handover attempts

Calculation

```
protect(decode(NBTYPE,"E", HOVERCNT, nullFloat() ))
```

HOI_LOST

MS lost at BSC internal handover

Calculation

```
protect(decode(NBTYPE,"I", vsum(HOVERCNT, -1 * HORTTOCH, -1 * HOVERSUC),
nullFloat()))
```

HOI_LOST%

MS lost at BSC internal handover

Calculation

```
100 * protect(decode(NBTYPE,"I", vsum(HOVERCNT, -1 * HORTTOCH, -1 * HOVER-
SUC), nullFloat())) / (1.0 * protect(decode(NBTYPE,"I", HOVERCNT, null-
Float())))
```

HOI_SUC

BSC internal handover successful attempts

© Copyright IBM Corp. 2008, 2009. All Rights Reserved.

Calculation

```
protect(decode(NBTYPE,"I", HOVERSUC, nullFloat() ))
```

HOI_TOT

BSC internal handover attempts

Calculation

```
protect(decode(NBTYPE,"I", HOVERCNT, nullFloat() ))
```

INTERVALS

Number of 60 minute intervals covered

Calculation

```
PERLEN / (1.0 * 60)
```

LocalName

NBCell Name

Calculation

```
LocalKey
```

NUMDAYS

of days in Report

Calculation

```
DAYSINREPORT()
```

NUMHOURS

of hours in Summation Data

Calculation

VENDORTECH

Vendor Technology

Calculation

```
isNull( PERLEN ) ? nullString() : "EricssonGSM"
```

NBCell Peg Counts

The following is a list of peg counts for the NBCell entity.

BSS_RELEASE

Release

HOASBCL

Assign Handover Att to Better cell. When Neighbour cell type NBTYPE=I (Internal) NICELASS (Assignment Handovers to Internal Neighbouring Cell) will load and when NETYPE=E (External) NECELASS (Assignment Handovers to Neighbouring External Cell) will load. NBTYPE is an internal Counter to choose internal or external Handover.

Data Source

BSC_IOG20_APG40

Source Field

HOASBCL

Source Section

NICELASS,NECELASS

HOASWCL

Assign Handover to Worse cell. When Neighbour cell type NBTYPE=I (Internal) NICELASS (Assignment Handovers to Internal Neighbouring Cell) will load and when NETYPE=E (External) NECELASS (Assignment Handovers to Neighbouring External Cell) will load. NBTYPE is an internal Counter to choose internal or external Handover.

Data Source

BSC_IOG20_APG40

Source Field

HOASWCL

Source Section

NICELASS,NECELASS

HOATTHR

Number of handovers at high handover rate. When Neighbour cell type NBTYPE=I (Internal) Object type = NICELHOEX (Handover Attempts to Internal Neighbouring Cells at High Handover Rate and Classifying Serving Cells) will load and when NETYPE=E (External) NECELHOEX (Handover Attempts to External Neighbouring Cells at High Handover Rate and Classifying Serving Cells) will load. NBTYPE is an internal Counter to choose internal or external Handover.

© Copyright IBM Corp. 2008, 2009. All Rights Reserved.

Data Source

BSC_IOG20_APG40

Source Field

HOATTHR

Source Section

NICELHOEX,NECELHOEX

HOATTHSS

HO attempts when serving cell is a high signal strength cell. When Neighbour cell type NBTYPE=I (Internal) Object type = NICELHOEX (Handover Attempts to Internal Neighbouring Cells at High Handover Rate and Classifying Serving Cells) will load and when NETYPE=E (External) NECELHOEX (Handover Attempts to External Neighbouring Cells at High Handover Rate and Classifying Serving Cells) will load. NBTYPE is an internal Counter to choose internal or external Handover.

Data Source

BSC_IOG20_APG40

Source Field

HOATTHSS

Source Section

NICELHOEX,NECELHOEX

HOATTLSS

HO attempts when serving cell is a low signal strength cell. When Neighbour cell type NBTYPE=I (Internal) Object type = NICELHOEX (Handover Attempts to Internal Neighbouring Cells at High Handover Rate and Classifying Serving Cells) will load and when NETYPE=E (External) NECELHOEX (Handover Attempts to External Neighbouring Cells at High Handover Rate and Classifying Serving Cells) will load. NBTYPE is an internal Counter to choose internal or external Handover.

Data Source

BSC_IOG20_APG40

Source Field

HOATTLSS

Source Section

NICELHOEX,NECELHOEX

HOATTSHOULDUTRAN

Number of handover attempts to a neighbouring UTRAN FDD cell due to the Service Handover value is 'should'.

Data Source

BSC_IOG20_APG40

Source Field

HOATTSHOULDUTRAN

Source Section

NUCELLREL

HODUPFT

Number of handover attempts during a predefined time (10 seconds). When Neighbour cell type NBTYPE=I (Internal) NICELHO (Handover to Internal Neighbouring Cell) will load and when NETYPE=E (External) NECELHO (Handover to External Neighbouring Cell) will load. NBTYPE is an internal Counter to choose internal or external Handover.

Data Source

BSC_IOG20_APG40

Source Field

HODUPFT

Source Section

NECELHO,NECELHO

HODWNQA

Number of handovers at bad downlink quality. When Neighbour cell type NBTYPE=I (Internal) NICELHO (Handover to Internal Neighbouring Cell) will load and when NETYPE=E (External) NECELHO (Handover to External Neighbouring Cell) will load. NBTYPE is an internal Counter to choose internal or external Handover.

Data Source

BSC_IOG20_APG40

© Copyright IBM Corp. 2008, 2009. All Rights Reserved.

Source Field

HODWNQA

Source Section

NECELHO,NECELHO

HOEXCTA

Number of handovers due to exceeded time alignment. When Neighbour cell type NBTYPE=I (Internal) NICELHO (Handover to Internal Neighbouring Cell) will load and when NETYPE=E (External) NECELHO (Handover to External Neighbouring Cell) will load. NBTYPE is an internal Counter to choose internal or external Handover.

Data Source

BSC_IOG20_APG40

Source Field

HOEXCTA

Source Section

NECELHO,NECELHO

HOREQCNTUTRAN

The number of handover required sent to the neighbouring UTRAN cell.

Data Source

BSC_IOG20_APG40

Source Field

HOREQCNTUTRAN

Source Section

NUCELLREL

HORTTOCH

handover attempts where MS returns to the old channel.When Neighbour cell type NBTYPE=I (Internal) NCELLREL (Handover to Neighbouring Internal Cell) will load and when NETYPE=E (External) NECELLREL (Handover to Neighbouring External Cell) will load. NBTYPE is an internal Counter to choose internal or external Handover.

Data Source

BSC_IOG20_APG40

Source Field

HORTTOCH

Source Section

NECELLREL,NICELLREL

HORTTOCHUTRAN

The number of handover attempts to the neighbouring UTRAN cell resulting in the MS returning to the old channel on the GSM cell.

Data Source

BSC_IOG20_APG40

Source Field

HORTTOCHUTRAN

Source Section

NUCELLREL

HOSUCBCL

successful assignment HOs to better cell. When Neighbour cell type NBTYPE=I (Internal) NICELASS (Assignment Handovers to Internal Neighbouring Cell) will load and when NETYPE=E (External) NECELASS (Assignment Handovers to Neighbouring External Cell) will load. NBTYPE is an internal Counter to choose internal or external Handover.

Data Source

BSC_IOG20_APG40

Source Field

HOSUCBCL

Source Section

NICELASS,NECELASS

© Copyright IBM Corp. 2008, 2009. All Rights Reserved.

HOSUCHR

Number of successful handovers at high handover rate. When Neighbour cell type NBTYPE=I (Internal) Object type = NICELHOEX (Handover Attempts to Internal Neighbouring Cells at High Handover Rate and Classifying Serving Cells) will load and when NETYPE=E (External) NECELHOEX (Handover Attempts to External Neighbouring Cells at High Handover Rate and Classifying Serving Cells) will load. NBTYPE is an internal Counter to choose internal or external Handover.

Data Source

BSC_IOG20_APG40

Source Field

HOSUCHR

Source Section

NICELHOEX,NECELHOEX

HOSUCWCL

successful assignment HOs to worse cell. When Neighbour cell type NBTYPE=I (Internal) NICELASS (Assignment Handovers to Internal Neighbouring Cell) will load and when NETYPE=E (External) NECELASS (Assignment Handovers to Neighbouring External Cell) will load. NBTYPE is an internal Counter to choose internal or external Handover.

Data Source

BSC_IOG20_APG40

Source Field

HOSUCWCL

Source Section

NICELASS,NECELASS

HOTOHCS

Number of non-urgency handovers to internal cell due to Hierarchical Cell Structure (HCS).When Neighbour cell type NBTYPE=I (Internal) NICELHO (Handover to Internal Neighbouring Cell) will load and when NETYPE=E (External) NECELHO (Handover to External Neighbouring Cell) will load. NBTYPE is an internal Counter to choose internal or external Handover.

Data Source

BSC_IOG20_APG40

Source Field

HOTOHCS

Source Section

NECELHO,NECELHO

HOTOKCL

Number of handovers to better K-cell . When Neighbour cell type NBTYPE=I (Internal) NICELHO (Handover to Internal Neighbouring Cell) will load and when NETYPE=E (External) NECELHO (Handover to External Neighbouring Cell) will load. NBTYPE is an internal Counter to choose internal or external Handover.

Data Source

BSC_IOG20_APG40

Source Field

HOTOKCL

Source Section

NECELHO,NECELHO

HOTOLCL

Number of handovers to better L-cell . When Neighbour cell type NBTYPE=I (Internal) NICELHO (Handover to Internal Neighbouring Cell) will load and when NETYPE=E (External) NECELHO (Handover to External Neighbouring Cell) will load. NBTYPE is an internal Counter to choose internal or external Handover.

Data Source

BSC_IOG20_APG40

Source Field

HOTOLCL

Source Section

NECELHO,NECELHO

© Copyright IBM Corp. 2008, 2009. All Rights Reserved.

HOUPLQA

Number of handovers at bad uplink quality. When Neighbour cell type NBTYPE=I (Internal) NICELHO (Handover to Internal Neighbouring Cell) will load and when NETYPE=E (External) NECELHO (Handover to External Neighbouring Cell) will load. NBTYPE is an internal Counter to choose internal or external Handover.

Data Source

BSC_IOG20_APG40

Source Field

HOUPLQA

Source Section

NECELHO,NECELHO

HOVERCNT

Handover Atts to NCELL. When Neighbour cell type NBTYPE=I (Internal) NCELLREL (Handover to Neighbouring Internal Cell) will load and when NETYPE=E (External) NECELLREL (Handover to Neighbouring External Cell) will load. NBTYPE is an internal Counter to choose internal or external Handover.

Data Source

BSC_IOG20_APG40

Source Field

HOVERCNT

Source Section

NECELLREL,NICELLREL

HOVERCNTUTRAN

The number of handover attempts to the neighbouring UTRAN cell.

Data Source

BSC_IOG20_APG40

Source Field

HOVERCNTUTRAN

Source Section

NUCELLREL

HOVERSUC

Succ Handover to NCELL. When Neighbour cell type NBTYPE=I (Internal) NCELLREL (Handover to Neighbouring Internal Cell) will load and when NETYPE=E (External) NECELLREL (Handover to Neighbouring External Cell) will load. NBTYPE is an internal Counter to choose internal or external Handover.

Data Source

BSC_IOG20_APG40

Source Field

HOVERSUC

Source Section

NECELLREL,NICELLREL

HOVERSUCUTRAN

The number of successful handovers to the neighbouring UTRAN cell.

Data Source

BSC_IOG20_APG40

Source Field

HOVERSUCUTRAN

Source Section

NUCELLREL

NBTYPE

Neighbour cell type (I - Internal, E - External)

PERLEN

Period Length

SUCURGHOUTRAN

Number of successful handover attempts to the neighbour UTRAN FDD cell in case of urgency conditions.

© Copyright IBM Corp. 2008, 2009. All Rights Reserved.

Data Source

BSC_IOG20_APG40

Source Field

SUCURGHOUTRAN

Source Section

NUCELLREL

URGHOVERUTRAN

Number of handover attempts to the neighbour UTRAN FDD cell in case of urgency conditions.

Data Source

BSC_IOG20_APG40

Source Field

URGHOVERUTRAN

Source Section

NUCELLREL

NI Primitive Calculations

The following is a list of primitive calculations for the NI entity.

GRAPHmultiLineSeparator

Special Control Field for Multi-Line Graphs

Calculation

```
""
```

NUMDAYS

of days in Report

Calculation

```
DAYSINREPORT()
```

NUMHOURS

of hours in Summation Data

Calculation

ProblemCode Primitive Calculations

The following is a list of primitive calculations for the ProblemCode entity.

GRAPHmultiLineSeparator

Special Control Field for Multi-Line Graphs

Calculation

```
""
```

INTERVALS

Number of 60 minute intervals covered

Calculation

```
PERLEN / (1.0 * 60)
```

NUMDAYS

of days in Report

Calculation

```
DAYSINREPORT()
```

NUMHOURS

of hours in Summation Data

Calculation

VENDORTECH

Vendor Technology

Calculation

```
isNull( PERLEN ) ? nullString() : "EricssonGSM"
```

ProblemCode Peg Counts

The following is a list of peg counts for the ProblemCode entity.

© Copyright IBM Corp. 2008, 2009. All Rights Reserved.

MSC_RELEASE

Release

NERRSIT

Number of protocol error situations not resulting in abort sending

Data Source

MSC_IOG20_APG40

Source Field

NERRSIT

Source Section

TCABO

PERLEN

Period Length

RECEIVED

Number of aborts received

Data Source

MSC_IOG20_APG40

Source Field

RECEIVED

Source Section

TCABO

SENT

Number of aborts sent

Data Source

MSC_IOG20_APG40

Source Field

SENT

Source Section

TCABO

QOS Primitive Calculations

The following is a list of primitive calculations for the QOS entity.

Ave_LLC_PDU_per_TBF

Average LLC-PDU per TBF (kb)

Calculation

```
NUMBERLLCPDU / (1.0 * NUMBERTBF)
```

Ave_LLC_PDU_Throughput

Average LLC-PDU Throughput (kb/s)

Calculation

```
NUMBERLLCPDU / (1.0 * PFCLIFETIME)
```

GRAPHmultiLineSeparator

Special Control Field for Multi-Line Graphs

Calculation

```
""
```

INTERVALS

Number of 60 minute intervals covered

Calculation

```
PERLEN / (1.0 * 60)
```

LocalName

BSCQOS Name

Calculation

```
LocalKey
```

Nof_TBF

No. of TBFs

© Copyright IBM Corp. 2008, 2009. All Rights Reserved.

Calculation

```
NUMBERTBF
```

NUMDAYS

of days in Report

Calculation

```
DAYSINREPORT()
```

NUMHOURS

of hours in Summation Data

Calculation

VENDORTECH

Vendor Technology

Calculation

```
isNull( PERLEN ) ? nullString() : "EricssonGSM"
```

QOS Peg Counts

The following is a list of peg counts for the QOS entity.

BSS_RELEASE

Release

NUMBERLLCPDU

Acc nr of LLC PDU octets transmitted by active PFCs with a specific combination

Data Source

BSC_IOG20_APG40

Source Field

NUMBERLLCPDU

Source Section

BSCQOS

NUMBERTBF

Accumulated nr of TBFs that have carried active PFCs with a specific combination

Data Source

BSC_IOG20_APG40

Source Field

NUMBERTBF

Source Section

BSCQOS

PERLEN

Period Length

PFCLIFETIME

Accumulated transmission time of all the LLC PDUs transmitted during an active PFC with a specific combination

Data Source

BSC_IOG20_APG40

Source Field

PFCLIFETIME

Source Section

BSCQOS

Radio Primitive Calculations

The following is a list of primitive calculations for the Radio entity.

GRAPHmultiLineSeparator

Special Control Field for Multi-Line Graphs

Calculation

""

© Copyright IBM Corp. 2008, 2009. All Rights Reserved.

NUMDAYS

of days in Report

Calculation

```
DAYSINREPORT()
```

NUMHOURS

of hours in Summation Data

Calculation

Radio Peg Counts

The following is a list of peg counts for the Radio entity.

Transiver_ID

Transiver ID , Integer between 0 and 11

Source Section

MOTS

RNCSTAT Primitive Calculations

The following is a list of primitive calculations for the RNCSTAT entity.

GRAPHmultiLineSeparator

Special Control Field for Multi-Line Graphs

Calculation

```
""
```

NUMDAYS

of days in Report

Calculation

```
DAYSINREPORT()
```

NUMHOURS

of hours in Summation Data

Calculation

VENDORTECH

Vendor Technology

Calculation

```
isNull( PERLEN ) ? nullString() : "EricssonGSM"
```

RNCSTAT Peg Counts

The following is a list of peg counts for the RNCSTAT entity.

MSC_RELEASE

Release

NBSTSSMTOT

Number of received reset messages.

Data Source

MSC_IOG20_APG40

Source Field

NBSTSSMTOT

Source Section

RNCSTAT

NRNFRMSCCI

Number of successful RAB assignments for call from mobile subscriber.

Data Source

MSC_IOG20_APG40

Source Field

NRNFRMSCCI

Source Section

RNCSTAT

© Copyright IBM Corp. 2008, 2009. All Rights Reserved.

NRNFRMTOTI

Number of successful RAB assignments for call to mobile subscriber.

Data Source

MSC_IOG20_APG40

Source Field

NRNFRMTOTI

Source Section

RNCSTAT

NRNFRRRTOT

Number of received Reset Resource messages.

Data Source

MSC_IOG20_APG40

Source Field

NRNFRRRTOT

Source Section

RNCSTAT

NRNTIHRSUCC

Number of successful incoming relocation to the RNC.

Data Source

MSC_IOG20_APG40

Source Field

NRNTIHRSUCC

Source Section

RNCSTAT

NRNTIHRUSUCC

Number of successful incoming relocation to the RNC.

Data Source

MSC_IOG20_APG40

Source Field

NRNTIHRUSUCC

Source Section

RNCSTAT

NRNTLRCTOT

Number of Location Reporting Control messages sent.

Data Source

MSC_IOG20_APG40

Source Field

NRNTLRCTOT

Source Section

RNCSTAT

NRNTLRDRTOT

Number of Location Related Data Request messages sent.

Data Source

MSC_IOG20_APG40

Source Field

NRNTLRDRTOT

Source Section

RNCSTAT

NRNTLRDSUCC

Number of Location Related Data Response messages or Location Related Data Failure messages received.

© Copyright IBM Corp. 2008, 2009. All Rights Reserved.

Data Source

MSC_IOG20_APG40

Source Field

NRNTLRDSUCC

Source Section

RNCSTAT

NRNTLRSUCC

Number of Location Report messages containing Geographical Co-ordinates received.

Data Source

MSC_IOG20_APG40

Source Field

NRNTLRSUCC

Source Section

RNCSTAT

NRNTOHRSUCC

Number of successful outgoing relocation to the RNC.

Data Source

MSC_IOG20_APG40

Source Field

NRNTOHRSUCC

Source Section

RNCSTAT

NRNTOMSCCO

Total number of RAB assignments for call from mobile subscriber.

Data Source

MSC_IOG20_APG40

Source Field

NRNTOMSCCO

Source Section

RNCSTAT

NRNTOMTOTO

Total number of RAB assignments for call to mobile subscriber.

Data Source

MSC_IOG20_APG40

Source Field

NRNTOMTOTO

Source Section

RNCSTAT

NRNTORGSUCC

Number of successful outgoing UMTS to GSM handover from the RNC.

Data Source

MSC_IOG20_APG40

Source Field

NRNTORGSUCC

Source Section

RNCSTAT

NRNTORRTOT

Number of sent Reset Resource messages.

Data Source

MSC_IOG20_APG40

Source Field

NRNTORRTOT

© Copyright IBM Corp. 2008, 2009. All Rights Reserved.

Source Section

RNCSTAT

NRNTRRCTOT

Number of received relocation cancel messages per source RNC.

Data Source

MSC_IOG20_APG40

Source Field

NRNTRRCTOT

Source Section

RNCSTAT

NRNTRRRGTOT

Number of relocation required messages received for UMTS to GSM handover.

Data Source

MSC_IOG20_APG40

Source Field

NRNTRRRGTOT

Source Section

RNCSTAT

NRNTRRRTOT

Number of relocation required messages received.

Data Source

MSC_IOG20_APG40

Source Field

NRNTRRRTOT

Source Section

RNCSTAT

NRNTSRRTOT

Number of relocation request messages sent to the target RNC.

Data Source

MSC_IOG20_APG40

Source Field

NRNTSRRTOT

Source Section

RNCSTAT

NRNTSRRUTOT

Number of relocation request messages sent to the target RNC.

Data Source

MSC_IOG20_APG40

Source Field

NRNTSRRUTOT

Source Section

RNCSTAT

PERLEN

Period Length

RXOTS Primitive Calculations

The following is a list of primitive calculations for the RXOTS entity.

GRAPHmultiLineSeparator

Special Control Field for Multi-Line Graphs

Calculation

""

INTERVALS

Number of 60 minute intervals covered

© Copyright IBM Corp. 2008, 2009. All Rights Reserved.

Calculation

```
PERLEN / (1.0 * 60)
```

NUMDAYS

of days in Report

Calculation

```
DAYSINREPORT()
```

NUMHOURS

of hours in Summation Data

Calculation

VENDORTECH

Vendor Technology

Calculation

```
isNull( PERLEN ) ? nullString() : "EricssonGSM"
```

RXOTS Peg Counts

The following is a list of peg counts for the RXOTS entity.

BSS_RELEASE

Release

CONCNT

Connection set up attempt

Data Source

BSC_IOG20_APG40

Source Field

CONCNT

Source Section

MOTS

CONERRCNT

Time out or radio link failure

Data Source

BSC_IOG20_APG40

Source Field

CONERRCNT

Source Section

MOTS

ID1_MOTS

State

Data Source

BSC_IOG20_APG40

Source Field

ID1

Source Section

MOTS

ID2_MOTS

Block number

Data Source

BSC_IOG20_APG40

Source Field

ID2

Source Section

MOTS

PERLEN

Period Length

© Copyright IBM Corp. 2008, 2009. All Rights Reserved.

SAE Primitive Calculations

The following is a list of primitive calculations for the SAE entity.

GRAPHmultiLineSeparator

Special Control Field for Multi-Line Graphs

Calculation

```
""
```

INTERVALS

Number of 60 minute intervals covered

Calculation

```
PERLEN / (1.0 * 60)
```

NUMDAYS

of days in Report

Calculation

```
DAYSINREPORT()
```

NUMHOURS

of hours in Summation Data

Calculation

VENDORTECH

Vendor Technology

Calculation

```
isNull( PERLEN ) ? nullString() : "EricssonGSM"
```

SAE Peg Counts

The following is a list of peg counts for the SAE entity.

ID1_MSC_SAE

Block number

Data Source

MSC_IOG20_APG40

Source Field

ID1

Source Section

SAE

ID2_MSC_SAE

SAE 500

Data Source

MSC_IOG20_APG40

Source Field

ID2

Source Section

SAE

MSC_RELEASE

Release

NCALLS_MSC_SAE

Number of seizure attempts

Data Source

MSC_IOG20_APG40

Source Field

NCALLS

Source Section

SAE

NIND_MSC_SAE

Number of individuals received during successful size alteration

© Copyright IBM Corp. 2008, 2009. All Rights Reserved.

Data Source

MSC_IOG20_APG40

Source Field

NIND

Source Section

SAE

NOVERFLOW_MSC_SAE

Number of seizure attempts with congestion

Data Source

MSC_IOG20_APG40

Source Field

NOVERFLOW

Source Section

SAE

NSCAN_MSC_SAE

Number of accumulations

Data Source

MSC_IOG20_APG40

Source Field

NSCAN

Source Section

SAE

NTRAL_MSC_SAE

Number of SAE 500 individuals seized at a given instant

Data Source

MSC_IOG20_APG40

Source Field

NTRAL

Source Section

SAE

NTRALACC_MSC_SAE

Accumulated value of NTRAL obtained during NSCAN scans

Data Source

MSC_IOG20_APG40

Source Field

NTRALACC

Source Section

SAE

PERLEN

Period Length

SAE_Block Primitive Calculations

The following is a list of primitive calculations for the SAE_Block entity.

GRAPHmultiLineSeparator

Special Control Field for Multi-Line Graphs

Calculation

```
""
```

NUMDAYS

of days in Report

Calculation

```
DAYSINREPORT()
```

NUMHOURS

of hours in Summation Data

© Copyright IBM Corp. 2008, 2009. All Rights Reserved.

Calculation

ServFeature_MSC Primitive Calculations

The following is a list of primitive calculations for the ServFeature_MSC entity.

GRAPHmultiLineSeparator

Special Control Field for Multi-Line Graphs

Calculation

```
""
```

NUMDAYS

of days in Report

Calculation

```
DAYSINREPORT()
```

NUMHOURS

of hours in Summation Data

Calculation

ServFeature_MSC Peg Counts

The following is a list of peg counts for the ServFeature_MSC entity.

NSERVFEATINV

Number of successful invocations of a service feature

SGSN_MSC Primitive Calculations

The following is a list of primitive calculations for the SGSN_MSC entity.

GRAPHmultiLineSeparator

Special Control Field for Multi-Line Graphs

Calculation

```
""
```

NUMDAYS

of days in Report

Calculation

```
DAYSINREPORT()
```

NUMHOURS

of hours in Summation Data

Calculation

SGSN_MSC Peg Counts

The following is a list of peg counts for the SGSN_MSC entity.

NPAG1SGSNTOT

Number of first page attempts to an SGSN

NPAG2SGSNTOT

Number of repeated page attempts to an SGSN

NSGSNRESETREC

Number of received Reset messages for each SGSN

NSGSNRESETSENT

Number of sent Reset messages for each SGSN

SPG Primitive Calculations

The following is a list of primitive calculations for the SPG entity.

GRAPHmultiLineSeparator

Special Control Field for Multi-Line Graphs

Calculation

```
""
```

NUMDAYS

of days in Report

© Copyright IBM Corp. 2008, 2009. All Rights Reserved.

Calculation

```
DAYSINREPORT()
```

NUMHOURS

of hours in Summation Data

Calculation

SPNode Primitive Calculations

The following is a list of primitive calculations for the SPNode entity.

GRAPHmultiLineSeparator

Special Control Field for Multi-Line Graphs

Calculation

```
""
```

INTERVALS

Number of 60 minute intervals covered

Calculation

```
PERLEN / (1.0 * 60)
```

NUMDAYS

of days in Report

Calculation

```
DAYSINREPORT()
```

NUMHOURS

of hours in Summation Data

Calculation

VENDORTECH

Vendor Technology

Calculation

```
isNull( PERLEN ) ? nullString() : "EricssonGSM"
```

SPNode Peg Counts

The following is a list of peg counts for the SPNode entity.

ACCFRPM

Free memory storage (kbytes), accumulated

Data Source

BSC_IOG20_APG40

Source Field

ACCFRPM

Source Section

SPSP

ACCLOAD

CPU load (percent), accumulated. The measurements are made from priority level 6 and upwards

Data Source

BSC_IOG20_APG40

Source Field

ACCLOAD

Source Section

SPSP

ACCSPIST

Accumulated time (in minutes) when the SP has been in state ISOLATED

Data Source

BSC_IOG20_APG40

Source Field

ACCSPIST

© Copyright IBM Corp. 2008, 2009. All Rights Reserved.

Source Section

SPSP

BSS_RELEASE

Release

DATALOSTFLAG_SPSP

Lost data flag

Data Source

BSC_IOG20_APG40

Source Field

DATALOSTFLAG

Source Section

SPSP

MAXFRPM

Maximum memory free storage (kbytes)

Data Source

BSC_IOG20_APG40

Source Field

MAXFRPM

Source Section

SPSP

MINFRPM

Minimum free memory storage (kbytes)

Data Source

BSC_IOG20_APG40

Source Field

MINFRPM

Source Section

SPSP

NOLRGUPFMS

Number of ordered large updates of FMS

Data Source

BSC_IOG20_APG40

Source Field

NOLRGUPFMS

Source Section

SPSP

NOSMUPFMS

Number of ordered small updates of FMS

Data Source

BSC_IOG20_APG40

Source Field

NOSMUPFMS

Source Section

SPSP

NPERREL

Number of performed restarts with reload

Data Source

BSC_IOG20_APG40

Source Field

NPERREL

Source Section

SPSP

© Copyright IBM Corp. 2008, 2009. All Rights Reserved.

NPERRES

Number of performed restarts without reload

Data Source

BSC_IOG20_APG40

Source Field

NPERRES

Source Section

SPSP

NRELA_SPSP

Number of ordered restarts with reload, automatically initiated

Data Source

BSC_IOG20_APG40

Source Field

NRELA

Source Section

SPSP

NRELM_SPSP

Number of ordered restarts with reload, manually initiated

Data Source

BSC_IOG20_APG40

Source Field

NRELM

Source Section

SPSP

NRESA

Number of ordered restarts without reload, automatically initiated

Data Source

BSC_IOG20_APG40

Source Field

NRESA

Source Section

SPSP

NRESM

Number of ordered restarts without reload, manually initiated

Data Source

BSC_IOG20_APG40

Source Field

NRESM

Source Section

SPSP

NSCAN

Number of accumulations (scannings)

Data Source

BSC_IOG20_APG40

Source Field

NSCAN

Source Section

SPSP

PERLEN

Period Length

SIZEPM

Total storage allocated (kbytes)

© Copyright IBM Corp. 2008, 2009. All Rights Reserved.

Data Source

BSC_IOG20_APG40

Source Field

SIZEPM

Source Section

SPSP

Subcell Primitive Calculations

The following is a list of primitive calculations for the Subcell entity.

GRAPHmultiLineSeparator

Special Control Field for Multi-Line Graphs

Calculation

```
""
```

NUMDAYS

of days in Report

Calculation

```
DAYSINREPORT()
```

NUMHOURS

of hours in Summation Data

Calculation

Subcell Peg Counts

The following is a list of peg counts for the Subcell entity.

AMR_Connection_Filter

AMR Connection Filter

Data Source

AMR Connection Filter

BSPOWER_10Range_10

BTS transmit power level cell data record in the range -10 dB

Data Source

BSPOWER(-10,-10)

BSPOWER_12Range_12

BTS transmit power level cell data record in the range -12 dB

Data Source

BSPOWER(-12,-12)

BSPOWER_14Range_14

BTS transmit power level cell data record in the range -14 dB

Data Source

BSPOWER(-14,-14)

BSPOWER_16Range_16

BTS transmit power level cell data record in the range -16 dB

Data Source

BSPOWER(-16,-16)

BSPOWER_18Range_18

BTS transmit power level cell data record in the range -18 dB

Data Source

BSPOWER(-18,-18)

BSPOWER_20Range_20

BTS transmit power level cell data record in the range -20 dB

Data Source

BSPOWER(-20,-20)

BSPOWER_22Range_22

BTS transmit power level cell data record in the range -22 dB

© Copyright IBM Corp. 2008, 2009. All Rights Reserved.

Data Source

BSPOWER(-22,-22)

BSPOWER_24Range_24

BTS transmit power level cell data record in the range -24 dB

Data Source

BSPOWER(-24,-24)

BSPOWER_26Range_26

BTS transmit power level cell data record in the range -26 dB

Data Source

BSPOWER(-26,-26)

BSPOWER_28Range_28

BTS transmit power level cell data record in the range -28 dB

Data Source

BSPOWER(-28,-28)

BSPOWER_2Range_2

BTS transmit power level cell data record in the range -2 dB

Data Source

BSPOWER(-2,-2)

BSPOWER_30Range_30

BTS transmit power level cell data record in the range -30 dB

Data Source

BSPOWER(-30,-30)

BSPOWER_4Range_4

BTS transmit power level cell data record in the range -4 dB

Data Source

BSPOWER(-4,-4)

BSPOWER_6Range_6

BTS transmit power level cell data record in the range -6 dB

Data Source

BSPOWER(-6,-6)

BSPOWER_8Range_8

BTS transmit power level cell data record in the range -8 dB

Data Source

BSPOWER(-8,-8)

BSPOWER0Range0

BTS transmit power level cell data record in the range 0 dB

Data Source

BSPOWER(0,0)

CellSetName

Name of the cell set that this cell appears in

Data Source

Cell Set Name

MSPOWER0Range0

MS transmit power level cell data record in the range 0 dBm

Data Source

MSPOWER(0,0)

MSPOWER10Range10

MS transmit power level cell data record in the range 10 dBm

Data Source

MSPOWER(10,10)

MSPOWER11Range11

MS transmit power level cell data record in the range 11 dBm

© Copyright IBM Corp. 2008, 2009. All Rights Reserved.

Data Source

MSPOWER(11,11)

MSPOWER12Range12

MS transmit power level cell data record in the range 12 dBm

Data Source

MSPOWER(12,12)

MSPOWER13Range13

MS transmit power level cell data record in the range 13 dBm

Data Source

MSPOWER(13,13)

MSPOWER14Range14

MS transmit power level cell data record in the range 14 dBm

Data Source

MSPOWER(14,14)

MSPOWER15Range15

MS transmit power level cell data record in the range 15 dBm

Data Source

MSPOWER(15,15)

MSPOWER16Range16

MS transmit power level cell data record in the range 16 dBm

Data Source

MSPOWER(16,16)

MSPOWER17Range17

MS transmit power level cell data record in the range 17 dBm

Data Source

MSPOWER(17,17)

MSPOWER18Range18

MS transmit power level cell data record in the range 18 dBm

Data Source

MSPOWER(18,18)

MSPOWER19Range19

MS transmit power level cell data record in the range 19 dBm

Data Source

MSPOWER(19,19)

MSPOWER1Range1

MS transmit power level cell data record in the range 1 dBm

Data Source

MSPOWER(1,1)

MSPOWER20Range20

MS transmit power level cell data record in the range 20 dBm

Data Source

MSPOWER(20,20)

MSPOWER21Range21

MS transmit power level cell data record in the range 21 dBm

Data Source

MSPOWER(21,21)

MSPOWER22Range22

MS transmit power level cell data record in the range 22 dBm

Data Source

MSPOWER(22,22)

MSPOWER23Range23

MS transmit power level cell data record in the range 23 dBm

© Copyright IBM Corp. 2008, 2009. All Rights Reserved.

Data Source

MSPOWER(23,23)

MSPOWER24Range24

MS transmit power level cell data record in the range 24 dBm

Data Source

MSPOWER(24,24)

MSPOWER25Range25

MS transmit power level cell data record in the range 25 dBm

Data Source

MSPOWER(25,25)

MSPOWER26Range26

MS transmit power level cell data record in the range 26 dBm

Data Source

MSPOWER(26,26)

MSPOWER27Range27

MS transmit power level cell data record in the range 27 dBm

Data Source

MSPOWER(27,27)

MSPOWER28Range28

MS transmit power level cell data record in the range 28 dBm

Data Source

MSPOWER(28,28)

MSPOWER29Range29

MS transmit power level cell data record in the range 29 dBm

Data Source

MSPOWER(29,29)

MSPOWER2Range2

MS transmit power level cell data record in the range 2 dBm

Data Source

MSPOWER(2,2)

MSPOWER30Range30

MS transmit power level cell data record in the range 30 dBm

Data Source

MSPOWER(30,30)

MSPOWER31Range31

MS transmit power level cell data record in the range 31 dBm

Data Source

MSPOWER(31,31)

MSPOWER32Range32

MS transmit power level cell data record in the range 32 dBm

Data Source

MSPOWER(32,32)

MSPOWER33Range33

MS transmit power level cell data record in the range 33 dBm

Data Source

MSPOWER(33,33)

MSPOWER34Range34

MS transmit power level cell data record in the range 34 dBm

Data Source

MSPOWER(34,34)

MSPOWER35Range35

MS transmit power level cell data record in the range 35 dBm

© Copyright IBM Corp. 2008, 2009. All Rights Reserved.

Data Source

MSPOWER(35,35)

MSPOWER36Range36

MS transmit power level cell data record in the range 36 dBm

Data Source

MSPOWER(36,36)

MSPOWER37Range37

MS transmit power level cell data record in the range 37 dBm

Data Source

MSPOWER(37,37)

MSPOWER38Range38

MS transmit power level cell data record in the range 38 dBm

Data Source

MSPOWER(38,38)

MSPOWER39Range39

MS transmit power level cell data record in the range 39 dBm

Data Source

MSPOWER(39,39)

MSPOWER3Range3

MS transmit power level cell data record in the range 3 dBm

Data Source

MSPOWER(3,3)

MSPOWER4Range4

MS transmit power level cell data record in the range 4 dBm

Data Source

MSPOWER(4,4)

MSPOWER5Range5

MS transmit power level cell data record in the range 5 dBm

Data Source

MSPOWER(5,5)

MSPOWER6Range6

MS transmit power level cell data record in the range 6 dBm

Data Source

MSPOWER(6,6)

MSPOWER7Range7

MS transmit power level cell data record in the range 7 dBm

Data Source

MSPOWER(7,7)

MSPOWER8Range8

MS transmit power level cell data record in the range 8 dBm

Data Source

MSPOWER(8,8)

MSPOWER9Range9

MS transmit power level cell data record in the range 9 dBm

Data Source

MSPOWER(9,9)

noOfMeasFiltered

Number of filtered measurements

Data Source

noOfMeasFiltered

noOfMeasUnfiltered

Number of unfiltered measurement

© Copyright IBM Corp. 2008, 2009. All Rights Reserved.

Data Source

noOfMeasUnfiltered

PATHLOSSDIFF_10Range_10

Path loss difference between downlink and uplink in the range -10 dB

Data Source

PATHLOSSDIFF(-10,-10)

PATHLOSSDIFF_11Range_11

Path loss difference between downlink and uplink in the range -11 dB

Data Source

PATHLOSSDIFF(-11,-11)

PATHLOSSDIFF_12Range_12

Path loss difference between downlink and uplink in the range -12 dB

Data Source

PATHLOSSDIFF(-12,-12)

PATHLOSSDIFF_13Range_13

Path loss difference between downlink and uplink in the range -13 dB

Data Source

PATHLOSSDIFF(-13,-13)

PATHLOSSDIFF_14Range_14

Path loss difference between downlink and uplink in the range -14 dB

Data Source

PATHLOSSDIFF(-14,-14)

PATHLOSSDIFF_15Range_15

Path loss difference between downlink and uplink in the range -15 dB

Data Source

PATHLOSSDIFF(-15,-15)

PATHLOSSDIFF_16Range_16

Path loss difference between downlink and uplink in the range -16 dB

Data Source

PATHLOSSDIFF(-16,-16)

PATHLOSSDIFF_17Range_17

Path loss difference between downlink and uplink in the range -17 dB

Data Source

PATHLOSSDIFF(-17,-17)

PATHLOSSDIFF_18Range_18

Path loss difference between downlink and uplink in the range -18 dB

Data Source

PATHLOSSDIFF(-18,-18)

PATHLOSSDIFF_19Range_19

Path loss difference between downlink and uplink in the range -19 dB

Data Source

PATHLOSSDIFF(-19,-19)

PATHLOSSDIFF_1Range_1

Path loss difference between downlink and uplink in the range -1 dB

Data Source

PATHLOSSDIFF(-1,-1)

PATHLOSSDIFF_20Range_20

Path loss difference between downlink and uplink in the range -20 dB

Data Source

PATHLOSSDIFF(-20,-20)

PATHLOSSDIFF_21Range_21

Path loss difference between downlink and uplink in the range -21 dB

© Copyright IBM Corp. 2008, 2009. All Rights Reserved.

Data Source

PATHLOSSDIFF(-21,-21)

PATHLOSSDIFF_22Range_22

Path loss difference between downlink and uplink in the range -22 dB

Data Source

PATHLOSSDIFF(-22,-22)

PATHLOSSDIFF_23Range_23

Path loss difference between downlink and uplink in the range -23 dB

Data Source

PATHLOSSDIFF(-23,-23)

PATHLOSSDIFF_24Range_24

Path loss difference between downlink and uplink in the range -24 dB

Data Source

PATHLOSSDIFF(-24,-24)

PATHLOSSDIFF_25Range_25

Path loss difference between downlink and uplink in the range -25 dB

Data Source

PATHLOSSDIFF(-25,-25)

PATHLOSSDIFF_2Range_2

Path loss difference between downlink and uplink in the range -2 dB

Data Source

PATHLOSSDIFF(-2,-2)

PATHLOSSDIFF_3Range_3

Path loss difference between downlink and uplink in the range -3 dB

Data Source

PATHLOSSDIFF(-3,-3)

PATHLOSSDIFF_4Range_4

Path loss difference between downlink and uplink in the range -4 dB

Data Source

PATHLOSSDIFF(-4,-4)

PATHLOSSDIFF_5Range_5

Path loss difference between downlink and uplink in the range -5 dB

Data Source

PATHLOSSDIFF(-5,-5)

PATHLOSSDIFF_6Range_6

Path loss difference between downlink and uplink in the range -6 dB

Data Source

PATHLOSSDIFF(-6,-6)

PATHLOSSDIFF_7Range_7

Path loss difference between downlink and uplink in the range -7 dB

Data Source

PATHLOSSDIFF(-7,-7)

PATHLOSSDIFF_8Range_8

Path loss difference between downlink and uplink in the range -8 dB

Data Source

PATHLOSSDIFF(-8,-8)

PATHLOSSDIFF_9Range_9

Path loss difference between downlink and uplink in the range -9 dB

Data Source

PATHLOSSDIFF(-9,-9)

PATHLOSSDIFF0Range0

Path loss difference between downlink and uplink in the range 0 dB

© Copyright IBM Corp. 2008, 2009. All Rights Reserved.

Data Source

PATHLOSSDIFF(0,0)

PATHLOSSDIFF10Range10

Path loss difference between downlink and uplink in the range 10 dB

Data Source

PATHLOSSDIFF(10,10)

PATHLOSSDIFF11Range11

Path loss difference between downlink and uplink in the range 11 dB

Data Source

PATHLOSSDIFF(11,11)

PATHLOSSDIFF12Range12

Path loss difference between downlink and uplink in the range 12 dB

Data Source

PATHLOSSDIFF(12,12)

PATHLOSSDIFF13Range13

Path loss difference between downlink and uplink in the range 13 dB

Data Source

PATHLOSSDIFF(13,13)

PATHLOSSDIFF14Range14

Path loss difference between downlink and uplink in the range 14 dB

Data Source

PATHLOSSDIFF(14,14)

PATHLOSSDIFF15Range15

Path loss difference between downlink and uplink in the range 15 dB

Data Source

PATHLOSSDIFF(15,15)

PATHLOSSDIFF16Range16

Path loss difference between downlink and uplink in the range 16 dB

Data Source

PATHLOSSDIFF(16,16)

PATHLOSSDIFF17Range17

Path loss difference between downlink and uplink in the range 17 dB

Data Source

PATHLOSSDIFF(17,17)

PATHLOSSDIFF18Range18

Path loss difference between downlink and uplink in the range 18 dB

Data Source

PATHLOSSDIFF(18,18)

PATHLOSSDIFF19Range19

Path loss difference between downlink and uplink in the range 19 dB

Data Source

PATHLOSSDIFF(19,19)

PATHLOSSDIFF1Range1

Path loss difference between downlink and uplink in the range 1 dB

Data Source

PATHLOSSDIFF(1,1)

PATHLOSSDIFF20Range20

Path loss difference between downlink and uplink in the range 20 dB

Data Source

PATHLOSSDIFF(20,20)

PATHLOSSDIFF21Range21

Path loss difference between downlink and uplink in the range 21 dB

© Copyright IBM Corp. 2008, 2009. All Rights Reserved.

Data Source

PATHLOSSDIFF(21,21)

PATHLOSSDIFF22Range22

Path loss difference between downlink and uplink in the range 22 dB

Data Source

PATHLOSSDIFF(22,22)

PATHLOSSDIFF23Range23

Path loss difference between downlink and uplink in the range 23 dB

Data Source

PATHLOSSDIFF(23,23)

PATHLOSSDIFF24Range24

Path loss difference between downlink and uplink in the range 24 dB

Data Source

PATHLOSSDIFF(24,24)

PATHLOSSDIFF25Range25

Path loss difference between downlink and uplink in the range 25 dB

Data Source

PATHLOSSDIFF(25,25)

PATHLOSSDIFF2Range2

Path loss difference between downlink and uplink in the range 2 dB

Data Source

PATHLOSSDIFF(2,2)

PATHLOSSDIFF3Range3

Path loss difference between downlink and uplink in the range 3 dB

Data Source

PATHLOSSDIFF(3,3)

PATHLOSSDIFF4Range4

Path loss difference between downlink and uplink in the range 4 dB

Data Source

PATHLOSSDIFF(4,4)

PATHLOSSDIFF5Range5

Path loss difference between downlink and uplink in the range 5 dB

Data Source

PATHLOSSDIFF(5,5)

PATHLOSSDIFF6Range6

Path loss difference between downlink and uplink in the range 6 dB

Data Source

PATHLOSSDIFF(6,6)

PATHLOSSDIFF7Range7

Path loss difference between downlink and uplink in the range 7 dB

Data Source

PATHLOSSDIFF(7,7)

PATHLOSSDIFF8Range8

Path loss difference between downlink and uplink in the range 8 dB

Data Source

PATHLOSSDIFF(8,8)

PATHLOSSDIFF9Range9

Path loss difference between downlink and uplink in the range 9 dB

Data Source

PATHLOSSDIFF(9,9)

PATHLOSSDL100Range101

Downlink Path Loss Cell Data in the range 100 to 101 dB

© Copyright IBM Corp. 2008, 2009. All Rights Reserved.

Data Source

PATHLOSSDL(100,101)

PATHLOSSDL102Range103

Downlink Path Loss Cell Data in the range 102 to 103 dB

Data Source

PATHLOSSDL(102,103)

PATHLOSSDL104Range105

Downlink Path Loss Cell Data in the range 104 to 105 dB

Data Source

PATHLOSSDL(104,105)

PATHLOSSDL106Range107

Downlink Path Loss Cell Data in the range 106 to 107 dB

Data Source

PATHLOSSDL(106,107)

PATHLOSSDL108Range109

Downlink Path Loss Cell Data in the range 108 to 109 dB

Data Source

PATHLOSSDL(108,109)

PATHLOSSDL110Range111

Downlink Path Loss Cell Data in the range 110 to 111 dB

Data Source

PATHLOSSDL(110,111)

PATHLOSSDL112Range113

Downlink Path Loss Cell Data in the range 112 to 113 dB

Data Source

PATHLOSSDL(112,113)

PATHLOSSDL114Range115

Downlink Path Loss Cell Data in the range 114 to 115 dB

Data Source

PATHLOSSDL(114,115)

PATHLOSSDL116Range117

Downlink Path Loss Cell Data in the range 116 to 117 dB

Data Source

PATHLOSSDL(116,117)

PATHLOSSDL118Range119

Downlink Path Loss Cell Data in the range 118 to 119 dB

Data Source

PATHLOSSDL(118,119)

PATHLOSSDL120Range121

Downlink Path Loss Cell Data in the range 120 to 121 dB

Data Source

PATHLOSSDL(120,121)

PATHLOSSDL122Range123

Downlink Path Loss Cell Data in the range 122 to 123 dB

Data Source

PATHLOSSDL(122,123)

PATHLOSSDL124Range125

Downlink Path Loss Cell Data in the range 124 to 125 dB

Data Source

PATHLOSSDL(124,125)

PATHLOSSDL126Range127

Downlink Path Loss Cell Data in the range 126 to 127 dB

© Copyright IBM Corp. 2008, 2009. All Rights Reserved.

Data Source

PATHLOSSDL(126,127)

PATHLOSSDL128Range129

Downlink Path Loss Cell Data in the range 128 to 129 dB

Data Source

PATHLOSSDL(128,129)

PATHLOSSDL130Range131

Downlink Path Loss Cell Data in the range 130 to 131 dB

Data Source

PATHLOSSDL(130,131)

PATHLOSSDL132Range133

Downlink Path Loss Cell Data in the range 132 to 133 dB

Data Source

PATHLOSSDL(132,133)

PATHLOSSDL134Range135

Downlink Path Loss Cell Data in the range 134 to 135 dB

Data Source

PATHLOSSDL(134,135)

PATHLOSSDL136Range137

Downlink Path Loss Cell Data in the range 136 to 137 dB

Data Source

PATHLOSSDL(136,137)

PATHLOSSDL138Range139

Downlink Path Loss Cell Data in the range 138 to 139 dB

Data Source

PATHLOSSDL(138,139)

PATHLOSSDL140Range141

Downlink Path Loss Cell Data in the range 140 to 141 dB

Data Source

PATHLOSSDL(140,141)

PATHLOSSDL142Range143

Downlink Path Loss Cell Data in the range 142 to 143 dB

Data Source

PATHLOSSDL(142,143)

PATHLOSSDL144Range145

Downlink Path Loss Cell Data in the range 144 to 145 dB

Data Source

PATHLOSSDL(144,145)

PATHLOSSDL146Range147

Downlink Path Loss Cell Data in the range 146 to 147 dB

Data Source

PATHLOSSDL(146,147)

PATHLOSSDL148Range149

Downlink Path Loss Cell Data in the range 148 to 149 dB

Data Source

PATHLOSSDL(148,149)

PATHLOSSDL150Range151

Downlink Path Loss Cell Data in the range 150 to 151 dB

Data Source

PATHLOSSDL(150,151)

PATHLOSSDL152Range153

Downlink Path Loss Cell Data in the range 152 to 153 dB

© Copyright IBM Corp. 2008, 2009. All Rights Reserved.

Data Source

PATHLOSSDL(152,153)

PATHLOSSDL154Range155

Downlink Path Loss Cell Data in the range 154 to 155 dB

Data Source

PATHLOSSDL(154,155)

PATHLOSSDL156Range157

Downlink Path Loss Cell Data in the range 156 to 157 dB

Data Source

PATHLOSSDL(156,157)

PATHLOSSDL158Range190

Downlink Path Loss Cell Data in the range 158 to 190 dB

Data Source

PATHLOSSDL(158,190)

PATHLOSSDL30Range31

Downlink Path Loss Cell Data in the range 30 to 31 dB

Data Source

PATHLOSSDL(30,31)

PATHLOSSDL32Range33

Downlink Path Loss Cell Data in the range 32 to 33 dB

Data Source

PATHLOSSDL(32,33)

PATHLOSSDL34Range35

Downlink Path Loss Cell Data in the range 34 to 35 dB

Data Source

PATHLOSSDL(34,35)

PATHLOSSDL36Range37

Downlink Path Loss Cell Data in the range 36 to 37 dB

Data Source

PATHLOSSDL(36,37)

PATHLOSSDL38Range39

Downlink Path Loss Cell Data in the range 38 to 39 dB

Data Source

PATHLOSSDL(38,39)

PATHLOSSDL40Range41

Downlink Path Loss Cell Data in the range 40 to 41 dB

Data Source

PATHLOSSDL(40,41)

PATHLOSSDL42Range43

Downlink Path Loss Cell Data in the range 42 to 43 dB

Data Source

PATHLOSSDL(42,43)

PATHLOSSDL44Range45

Downlink Path Loss Cell Data in the range 44 to 45 dB

Data Source

PATHLOSSDL(44,45)

PATHLOSSDL46Range47

Downlink Path Loss Cell Data in the range 46 to 47 dB

Data Source

PATHLOSSDL(46,47)

PATHLOSSDL48Range49

Downlink Path Loss Cell Data in the range 48 to 49 dB

© Copyright IBM Corp. 2008, 2009. All Rights Reserved.

Data Source

PATHLOSSDL(48,49)

PATHLOSSDL50Range51

Downlink Path Loss Cell Data in the range 50 to 51 dB

Data Source

PATHLOSSDL(50,51)

PATHLOSSDL52Range53

Downlink Path Loss Cell Data in the range 52 to 53 dB

Data Source

PATHLOSSDL(52,53)

PATHLOSSDL54Range55

Downlink Path Loss Cell Data in the range 54 to 55 dB

Data Source

PATHLOSSDL(54,55)

PATHLOSSDL56Range57

Downlink Path Loss Cell Data in the range 56 to 57 dB

Data Source

PATHLOSSDL(56,57)

PATHLOSSDL58Range59

Downlink Path Loss Cell Data in the range 58 to 59 dB

Data Source

PATHLOSSDL(58,59)

PATHLOSSDL60Range61

Downlink Path Loss Cell Data in the range 60 to 61 dB

Data Source

PATHLOSSDL(60,61)

PATHLOSSDL62Range63

Downlink Path Loss Cell Data in the range 62 to 63 dB

Data Source

PATHLOSSDL(62,63)

PATHLOSSDL64Range65

Downlink Path Loss Cell Data in the range 64 to 65 dB

Data Source

PATHLOSSDL(64,65)

PATHLOSSDL66Range67

Downlink Path Loss Cell Data in the range 66 to 67 dB

Data Source

PATHLOSSDL(66,67)

PATHLOSSDL68Range69

Downlink Path Loss Cell Data in the range 68 to 69 dB

Data Source

PATHLOSSDL(68,69)

PATHLOSSDL70Range71

Downlink Path Loss Cell Data in the range 70 to 71 dB

Data Source

PATHLOSSDL(70,71)

PATHLOSSDL72Range73

Downlink Path Loss Cell Data in the range 72 to 73 dB

Data Source

PATHLOSSDL(72,73)

PATHLOSSDL74Range75

Downlink Path Loss Cell Data in the range 74 to 75 dB

© Copyright IBM Corp. 2008, 2009. All Rights Reserved.

Data Source

PATHLOSSDL(74,75)

PATHLOSSDL76Range77

Downlink Path Loss Cell Data in the range 76 to 77 dB

Data Source

PATHLOSSDL(76,77)

PATHLOSSDL78Range79

Downlink Path Loss Cell Data in the range 78 to 79 dB

Data Source

PATHLOSSDL(78,79)

PATHLOSSDL80Range81

Downlink Path Loss Cell Data in the range 80 to 81 dB

Data Source

PATHLOSSDL(80,81)

PATHLOSSDL82Range83

Downlink Path Loss Cell Data in the range 82 to 83 dB

Data Source

PATHLOSSDL(82,83)

PATHLOSSDL84Range85

Downlink Path Loss Cell Data in the range 84 to 85 dB

Data Source

PATHLOSSDL(84,85)

PATHLOSSDL86Range87

Downlink Path Loss Cell Data in the range 86 to 87 dB

Data Source

PATHLOSSDL(86,87)

PATHLOSSDL88Range89

Downlink Path Loss Cell Data in the range 88 to 89 dB

Data Source

PATHLOSSDL(88,89)

PATHLOSSDL90Range91

Downlink Path Loss Cell Data in the range 90 to 91 dB

Data Source

PATHLOSSDL(90,91)

PATHLOSSDL92Range93

Downlink Path Loss Cell Data in the range 92 to 93 dB

Data Source

PATHLOSSDL(92,93)

PATHLOSSDL94Range95

Downlink Path Loss Cell Data in the range 94 to 95 dB

Data Source

PATHLOSSDL(94,95)

PATHLOSSDL96Range97

Downlink Path Loss Cell Data in the range 96 to 97 dB

Data Source

PATHLOSSDL(96,97)

PATHLOSSDL98Range99

Downlink Path Loss Cell Data in the range 98 to 99 dB

Data Source

PATHLOSSDL(98,99)

PATHLOSSUL100Range101

Uplink Path Loss Cell Data in the range 100 to 101 dB

© Copyright IBM Corp. 2008, 2009. All Rights Reserved.

Data Source

PATHLOSSUL(100,101)

PATHLOSSUL102Range103

Uplink Path Loss Cell Data in the range 102 to 103 dB

Data Source

PATHLOSSUL(102,103)

PATHLOSSUL104Range105

Uplink Path Loss Cell Data in the range 104 to 105 dB

Data Source

PATHLOSSUL(104,105)

PATHLOSSUL106Range107

Uplink Path Loss Cell Data in the range 106 to 107 dB

Data Source

PATHLOSSUL(106,107)

PATHLOSSUL108Range109

Uplink Path Loss Cell Data in the range 108 to 109 dB

Data Source

PATHLOSSUL(108,109)

PATHLOSSUL110Range111

Uplink Path Loss Cell Data in the range 110 to 111 dB

Data Source

PATHLOSSUL(110,111)

PATHLOSSUL112Range113

Uplink Path Loss Cell Data in the range 112 to 113 dB

Data Source

PATHLOSSUL(112,113)

PATHLOSSUL114Range115

Uplink Path Loss Cell Data in the range 114 to 115 dB

Data Source

PATHLOSSUL(114,115)

PATHLOSSUL116Range117

Uplink Path Loss Cell Data in the range 116 to 117 dB

Data Source

PATHLOSSUL(116,117)

PATHLOSSUL118Range119

Uplink Path Loss Cell Data in the range 118 to 119 dB

Data Source

PATHLOSSUL(118,119)

PATHLOSSUL120Range121

Uplink Path Loss Cell Data in the range 120 to 121 dB

Data Source

PATHLOSSUL(120,121)

PATHLOSSUL122Range123

Uplink Path Loss Cell Data in the range 122 to 123 dB

Data Source

PATHLOSSUL(122,123)

PATHLOSSUL124Range125

Uplink Path Loss Cell Data in the range 124 to 125 dB

Data Source

PATHLOSSUL(124,125)

PATHLOSSUL126Range127

Uplink Path Loss Cell Data in the range 126 to 127 dB

© Copyright IBM Corp. 2008, 2009. All Rights Reserved.

Data Source

PATHLOSSUL(126,127)

PATHLOSSUL128Range129

Uplink Path Loss Cell Data in the range 128 to 129 dB

Data Source

PATHLOSSUL(128,129)

PATHLOSSUL130Range131

Uplink Path Loss Cell Data in the range 130 to 131 dB

Data Source

PATHLOSSUL(130,131)

PATHLOSSUL132Range133

Uplink Path Loss Cell Data in the range 132 to 133 dB

Data Source

PATHLOSSUL(132,133)

PATHLOSSUL134Range135

Uplink Path Loss Cell Data in the range 134 to 135 dB

Data Source

PATHLOSSUL(134,135)

PATHLOSSUL136Range137

Uplink Path Loss Cell Data in the range 136 to 137 dB

Data Source

PATHLOSSUL(136,137)

PATHLOSSUL138Range139

Uplink Path Loss Cell Data in the range 138 to 139 dB

Data Source

PATHLOSSUL(138,139)

PATHLOSSUL140Range141

Uplink Path Loss Cell Data in the range 140 to 141 dB

Data Source

PATHLOSSUL(140,141)

PATHLOSSUL142Range143

Uplink Path Loss Cell Data in the range 142 to 143 dB

Data Source

PATHLOSSUL(142,143)

PATHLOSSUL144Range145

Uplink Path Loss Cell Data in the range 144 to 145 dB

Data Source

PATHLOSSUL(144,145)

PATHLOSSUL146Range147

Uplink Path Loss Cell Data in the range 146 to 147 dB

Data Source

PATHLOSSUL(146,147)

PATHLOSSUL148Range153

Uplink Path Loss Cell Data in the range 148 to 153 dB

Data Source

PATHLOSSUL(148,153)

PATHLOSSUL30Range31

Uplink Path Loss Cell Data in the range 30 to 31 dB

Data Source

PATHLOSSUL(30,31)

PATHLOSSUL32Range33

Uplink Path Loss Cell Data in the range 32 to 33 dB

© Copyright IBM Corp. 2008, 2009. All Rights Reserved.

Data Source

PATHLOSSUL(32,33)

PATHLOSSUL34Range35

Uplink Path Loss Cell Data in the range 34 to 35 dB

Data Source

PATHLOSSUL(34,35)

PATHLOSSUL36Range37

Uplink Path Loss Cell Data in the range 36 to 37 dB

Data Source

PATHLOSSUL(36,37)

PATHLOSSUL38Range39

Uplink Path Loss Cell Data in the range 38 to 39 dB

Data Source

PATHLOSSUL(38,39)

PATHLOSSUL40Range41

Uplink Path Loss Cell Data in the range 40 to 41 dB

Data Source

PATHLOSSUL(40,41)

PATHLOSSUL42Range43

Uplink Path Loss Cell Data in the range 42 to 43 dB

Data Source

PATHLOSSUL(42,43)

PATHLOSSUL44Range45

Uplink Path Loss Cell Data in the range 44 to 45 dB

Data Source

PATHLOSSUL(44,45)

PATHLOSSUL46Range47

Uplink Path Loss Cell Data in the range 46 to 47 dB

Data Source

PATHLOSSUL(46,47)

PATHLOSSUL48Range49

Uplink Path Loss Cell Data in the range 48 to 49 dB

Data Source

PATHLOSSUL(48,49)

PATHLOSSUL50Range51

Uplink Path Loss Cell Data in the range 50 to 51 dB

Data Source

PATHLOSSUL(50,51)

PATHLOSSUL52Range53

Uplink Path Loss Cell Data in the range 52 to 53 dB

Data Source

PATHLOSSUL(52,53)

PATHLOSSUL54Range55

Uplink Path Loss Cell Data in the range 54 to 55 dB

Data Source

PATHLOSSUL(54,55)

PATHLOSSUL56Range57

Uplink Path Loss Cell Data in the range 56 to 57 dB

Data Source

PATHLOSSUL(56,57)

PATHLOSSUL58Range59

Uplink Path Loss Cell Data in the range 58 to 59 dB

© Copyright IBM Corp. 2008, 2009. All Rights Reserved.

Data Source

PATHLOSSUL(58,59)

PATHLOSSUL60Range61

Uplink Path Loss Cell Data in the range 60 to 61 dB

Data Source

PATHLOSSUL(60,61)

PATHLOSSUL62Range63

Uplink Path Loss Cell Data in the range 62 to 63 dB

Data Source

PATHLOSSUL(62,63)

PATHLOSSUL64Range65

Uplink Path Loss Cell Data in the range 64 to 65 dB

Data Source

PATHLOSSUL(64,65)

PATHLOSSUL66Range67

Uplink Path Loss Cell Data in the range 66 to 67 dB

Data Source

PATHLOSSUL(66,67)

PATHLOSSUL68Range69

Uplink Path Loss Cell Data in the range 68 to 69 dB

Data Source

PATHLOSSUL(68,69)

PATHLOSSUL70Range71

Uplink Path Loss Cell Data in the range 70 to 71 dB

Data Source

PATHLOSSUL(70,71)

PATHLOSSUL72Range73

Uplink Path Loss Cell Data in the range 72 to 73 dB

Data Source

PATHLOSSUL(72,73)

PATHLOSSUL74Range75

Uplink Path Loss Cell Data in the range 74 to 75 dB

Data Source

PATHLOSSUL(74,75)

PATHLOSSUL76Range77

Uplink Path Loss Cell Data in the range 76 to 77 dB

Data Source

PATHLOSSUL(76,77)

PATHLOSSUL78Range79

Uplink Path Loss Cell Data in the range 78 to 79 dB

Data Source

PATHLOSSUL(78,79)

PATHLOSSUL80Range81

Uplink Path Loss Cell Data in the range 80 to 81 dB

Data Source

PATHLOSSUL(80,81)

PATHLOSSUL82Range83

Uplink Path Loss Cell Data in the range 82 to 83 dB

Data Source

PATHLOSSUL(82,83)

PATHLOSSUL84Range85

Uplink Path Loss Cell Data in the range 84 to 85 dB

© Copyright IBM Corp. 2008, 2009. All Rights Reserved.

Data Source

PATHLOSSUL(84,85)

PATHLOSSUL86Range87

Uplink Path Loss Cell Data in the range 86 to 87 dB

Data Source

PATHLOSSUL(86,87)

PATHLOSSUL88Range89

Uplink Path Loss Cell Data in the range 88 to 89 dB

Data Source

PATHLOSSUL(88,89)

PATHLOSSUL90Range91

Uplink Path Loss Cell Data in the range 90 to 91 dB

Data Source

PATHLOSSUL(90,91)

PATHLOSSUL92Range93

Uplink Path Loss Cell Data in the range 92 to 93 dB

Data Source

PATHLOSSUL(92,93)

PATHLOSSUL94Range95

Uplink Path Loss Cell Data in the range 94 to 95 dB

Data Source

PATHLOSSUL(94,95)

PATHLOSSUL96Range97

Uplink Path Loss Cell Data in the range 96 to 97 dB

Data Source

PATHLOSSUL(96,97)

PATHLOSSUL98Range99

Uplink Path Loss Cell Data in the range 98 to 99 dB

Data Source

PATHLOSSUL(98,99)

PERLENSEC

Period Length

Data Source

I5VALASLR

RXLEVDL0Range0

Received signal strength downlink in the range -110 dBm

Data Source

RXLEVDL(0,0)

RXLEVDL10Range10

Received signal strength downlink in the range -100 dBm

Data Source

RXLEVDL(10,10)

RXLEVDL11Range11

Received signal strength downlink in the range -99 dBm

Data Source

RXLEVDL(11,11)

RXLEVDL12Range12

Received signal strength downlink in the range -98 dBm

Data Source

RXLEVDL(12,12)

RXLEVDL13Range13

Received signal strength downlink in the range -97 dBm

© Copyright IBM Corp. 2008, 2009. All Rights Reserved.

Data Source

RXLEVDL(13,13)

RXLEVDL14Range14

Received signal strength downlink in the range -96 dBm

Data Source

RXLEVDL(14,14)

RXLEVDL15Range15

Received signal strength downlink in the range -95 dBm

Data Source

RXLEVDL(15,15)

RXLEVDL16Range16

Received signal strength downlink in the range -94 dBm

Data Source

RXLEVDL(16,16)

RXLEVDL17Range17

Received signal strength downlink in the range -93 dBm

Data Source

RXLEVDL(17,17)

RXLEVDL18Range18

Received signal strength downlink in the range -92 dBm

Data Source

RXLEVDL(18,18)

RXLEVDL19Range19

Received signal strength downlink in the range -91 dBm

Data Source

RXLEVDL(19,19)

RXLEVDL1Range1

Received signal strength downlink in the range -109 dBm

Data Source

RXLEVDL(1,1)

RXLEVDL20Range20

Received signal strength downlink in the range -90 dBm

Data Source

RXLEVDL(20,20)

RXLEVDL21Range21

Received signal strength downlink in the range -89 dBm

Data Source

RXLEVDL(21,21)

RXLEVDL22Range22

Received signal strength downlink in the range -88 dBm

Data Source

RXLEVDL(22,22)

RXLEVDL23Range23

Received signal strength downlink in the range -87 dBm

Data Source

RXLEVDL(23,23)

RXLEVDL24Range24

Received signal strength downlink in the range -86 dBm

Data Source

RXLEVDL(24,24)

RXLEVDL25Range25

Received signal strength downlink in the range -85 dBm

© Copyright IBM Corp. 2008, 2009. All Rights Reserved.

Data Source

RXLEVDL(25,25)

RXLEVDL26Range26

Received signal strength downlink in the range -84 dBm

Data Source

RXLEVDL(26,26)

RXLEVDL27Range27

Received signal strength downlink in the range -83 dBm

Data Source

RXLEVDL(27,27)

RXLEVDL28Range28

Received signal strength downlink in the range -82 dBm

Data Source

RXLEVDL(28,28)

RXLEVDL29Range29

Received signal strength downlink in the range -81 dBm

Data Source

RXLEVDL(29,29)

RXLEVDL2Range2

Received signal strength downlink in the range -108 dBm

Data Source

RXLEVDL(2,2)

RXLEVDL30Range30

Received signal strength downlink in the range -80 dBm

Data Source

RXLEVDL(30,30)

RXLEVDL31Range31

Received signal strength downlink in the range -79 dBm

Data Source

RXLEVDL(31,31)

RXLEVDL32Range32

Received signal strength downlink in the range -78 dBm

Data Source

RXLEVDL(32,32)

RXLEVDL33Range33

Received signal strength downlink in the range -77 dBm

Data Source

RXLEVDL(33,33)

RXLEVDL34Range34

Received signal strength downlink in the range -76 dBm

Data Source

RXLEVDL(34,34)

RXLEVDL35Range35

Received signal strength downlink in the range -75 dBm

Data Source

RXLEVDL(35,35)

RXLEVDL36Range36

Received signal strength downlink in the range -74 dBm

Data Source

RXLEVDL(36,36)

RXLEVDL37Range37

Received signal strength downlink in the range -73 dBm

© Copyright IBM Corp. 2008, 2009. All Rights Reserved.

Data Source

RXLEVDL(37,37)

RXLEVDL38Range38

Received signal strength downlink in the range -72 dBm

Data Source

RXLEVDL(38,38)

RXLEVDL39Range39

Received signal strength downlink in the range -71 dBm

Data Source

RXLEVDL(39,39)

RXLEVDL3Range3

Received signal strength downlink in the range -107 dBm

Data Source

RXLEVDL(3,3)

RXLEVDL40Range40

Received signal strength downlink in the range -70 dBm

Data Source

RXLEVDL(40,40)

RXLEVDL41Range41

Received signal strength downlink in the range -69 dBm

Data Source

RXLEVDL(41,41)

RXLEVDL42Range42

Received signal strength downlink in the range -68 dBm

Data Source

RXLEVDL(42,42)

RXLEVDL43Range43

Received signal strength downlink in the range -67 dBm

Data Source

RXLEVDL(43,43)

RXLEVDL44Range44

Received signal strength downlink in the range -66 dBm

Data Source

RXLEVDL(44,44)

RXLEVDL45Range45

Received signal strength downlink in the range -65 dBm

Data Source

RXLEVDL(45,45)

RXLEVDL46Range46

Received signal strength downlink in the range -64 dBm

Data Source

RXLEVDL(46,46)

RXLEVDL47Range47

Received signal strength downlink in the range -63 dBm

Data Source

RXLEVDL(47,47)

RXLEVDL48Range48

Received signal strength downlink in the range -62 dBm

Data Source

RXLEVDL(48,48)

RXLEVDL49Range49

Received signal strength downlink in the range -61 dBm

© Copyright IBM Corp. 2008, 2009. All Rights Reserved.

Data Source

RXLEVDL(49,49)

RXLEVDL4Range4

Received signal strength downlink in the range -106 dBm

Data Source

RXLEVDL(4,4)

RXLEVDL50Range50

Received signal strength downlink in the range -60 dBm

Data Source

RXLEVDL(50,50)

RXLEVDL51Range51

Received signal strength downlink in the range -59 dBm

Data Source

RXLEVDL(51,51)

RXLEVDL52Range52

Received signal strength downlink in the range -58 dBm

Data Source

RXLEVDL(52,52)

RXLEVDL53Range53

Received signal strength downlink in the range -57 dBm

Data Source

RXLEVDL(53,53)

RXLEVDL54Range54

Received signal strength downlink in the range -56 dBm

Data Source

RXLEVDL(54,54)

RXLEVDL55Range55

Received signal strength downlink in the range -55 dBm

Data Source

RXLEVDL(55,55)

RXLEVDL56Range56

Received signal strength downlink in the range -54 dBm

Data Source

RXLEVDL(56,56)

RXLEVDL57Range57

Received signal strength downlink in the range -53 dBm

Data Source

RXLEVDL(57,57)

RXLEVDL58Range58

Received signal strength downlink in the range -52 dBm

Data Source

RXLEVDL(58,58)

RXLEVDL59Range59

Received signal strength downlink in the range -51 dBm

Data Source

RXLEVDL(59,59)

RXLEVDL5Range5

Received signal strength downlink in the range -105 dBm

Data Source

RXLEVDL(5,5)

RXLEVDL60Range60

Received signal strength downlink in the range -50 dBm

© Copyright IBM Corp. 2008, 2009. All Rights Reserved.

Data Source

RXLEVDL(60,60)

RXLEVDL61Range61

Received signal strength downlink in the range -49 dBm

Data Source

RXLEVDL(61,61)

RXLEVDL62Range62

Received signal strength downlink in the range -48 dBm

Data Source

RXLEVDL(62,62)

RXLEVDL63Range63

Received signal strength downlink in the range -47 dBm

Data Source

RXLEVDL(63,63)

RXLEVDL6Range6

Received signal strength downlink in the range -104 dBm

Data Source

RXLEVDL(6,6)

RXLEVDL7Range7

Received signal strength downlink in the range -103 dBm

Data Source

RXLEVDL(7,7)

RXLEVDL8Range8

Received signal strength downlink in the range -102 dBm

Data Source

RXLEVDL(8,8)

RXLEVDL9Range9

Received signal strength downlink in the range -101 dBm

Data Source

RXLEVDL(9,9)

RXLEVUL0Range0

Received signal strength uplink in the range -110 dBm

Data Source

RXLEVUL(0,0)

RXLEVUL10Range10

Received signal strength uplink in the range -100 dBm

Data Source

RXLEVUL(10,10)

RXLEVUL11Range11

Received signal strength uplink in the range -99 dBm

Data Source

RXLEVUL(11,11)

RXLEVUL12Range12

Received signal strength uplink in the range -98 dBm

Data Source

RXLEVUL(12,12)

RXLEVUL13Range13

Received signal strength uplink in the range -97 dBm

Data Source

RXLEVUL(13,13)

RXLEVUL14Range14

Received signal strength uplink in the range -96 dBm

© Copyright IBM Corp. 2008, 2009. All Rights Reserved.

Data Source

RXLEVUL(14,14)

RXLEVUL15Range15

Received signal strength uplink in the range -95 dBm

Data Source

RXLEVUL(15,15)

RXLEVUL16Range16

Received signal strength uplink in the range -94 dBm

Data Source

RXLEVUL(16,16)

RXLEVUL17Range17

Received signal strength uplink in the range -93 dBm

Data Source

RXLEVUL(17,17)

RXLEVUL18Range18

Received signal strength uplink in the range -92 dBm

Data Source

RXLEVUL(18,18)

RXLEVUL19Range19

Received signal strength uplink in the range -91 dBm

Data Source

RXLEVUL(19,19)

RXLEVUL1Range1

Received signal strength uplink in the range -109 dBm

Data Source

RXLEVUL(1,1)

RXLEVUL20Range20

Received signal strength uplink in the range -90 dBm

Data Source

RXLEVUL(20,20)

RXLEVUL21Range21

Received signal strength uplink in the range -89 dBm

Data Source

RXLEVUL(21,21)

RXLEVUL22Range22

Received signal strength uplink in the range -88 dBm

Data Source

RXLEVUL(22,22)

RXLEVUL23Range23

Received signal strength uplink in the range -87 dBm

Data Source

RXLEVUL(23,23)

RXLEVUL24Range24

Received signal strength uplink in the range -86 dBm

Data Source

RXLEVUL(24,24)

RXLEVUL25Range25

Received signal strength uplink in the range -85 dBm

Data Source

RXLEVUL(25,25)

RXLEVUL26Range26

Received signal strength uplink in the range -84 dBm

© Copyright IBM Corp. 2008, 2009. All Rights Reserved.

Data Source

RXLEVUL(26,26)

RXLEVUL27Range27

Received signal strength uplink in the range -83 dBm

Data Source

RXLEVUL(27,27)

RXLEVUL28Range28

Received signal strength uplink in the range -82 dBm

Data Source

RXLEVUL(28,28)

RXLEVUL29Range29

Received signal strength uplink in the range -81 dBm

Data Source

RXLEVUL(29,29)

RXLEVUL2Range2

Received signal strength uplink in the range -108 dBm

Data Source

RXLEVUL(2,2)

RXLEVUL30Range30

Received signal strength uplink in the range -80 dBm

Data Source

RXLEVUL(30,30)

RXLEVUL31Range31

Received signal strength uplink in the range -79 dBm

Data Source

RXLEVUL(31,31)

RXLEVUL32Range32

Received signal strength uplink in the range -78 dBm

Data Source

RXLEVUL(32,32)

RXLEVUL33Range33

Received signal strength uplink in the range -77 dBm

Data Source

RXLEVUL(33,33)

RXLEVUL34Range34

Received signal strength uplink in the range -76 dBm

Data Source

RXLEVUL(34,34)

RXLEVUL35Range35

Received signal strength uplink in the range -75 dBm

Data Source

RXLEVUL(35,35)

RXLEVUL36Range36

Received signal strength uplink in the range -74 dBm

Data Source

RXLEVUL(36,36)

RXLEVUL37Range37

Received signal strength uplink in the range -73 dBm

Data Source

RXLEVUL(37,37)

RXLEVUL38Range38

Received signal strength uplink in the range -72 dBm

© Copyright IBM Corp. 2008, 2009. All Rights Reserved.

Data Source

RXLEVUL(38,38)

RXLEVUL39Range39

Received signal strength uplink in the range -71 dBm

Data Source

RXLEVUL(39,39)

RXLEVUL3Range3

Received signal strength uplink in the range -107 dBm

Data Source

RXLEVUL(3,3)

RXLEVUL40Range40

Received signal strength uplink in the range -70 dBm

Data Source

RXLEVUL(40,40)

RXLEVUL41Range41

Received signal strength uplink in the range -69 dBm

Data Source

RXLEVUL(41,41)

RXLEVUL42Range42

Received signal strength uplink in the range -68 dBm

Data Source

RXLEVUL(42,42)

RXLEVUL43Range43

Received signal strength uplink in the range -67 dBm

Data Source

RXLEVUL(43,43)

RXLEVUL44Range44

Received signal strength uplink in the range -66 dBm

Data Source

RXLEVUL(44,44)

RXLEVUL45Range45

Received signal strength uplink in the range -65 dBm

Data Source

RXLEVUL(45,45)

RXLEVUL46Range46

Received signal strength uplink in the range -64 dBm

Data Source

RXLEVUL(46,46)

RXLEVUL47Range47

Received signal strength uplink in the range -63 dBm

Data Source

RXLEVUL(47,47)

RXLEVUL48Range48

Received signal strength uplink in the range -62 dBm

Data Source

RXLEVUL(48,48)

RXLEVUL49Range49

Received signal strength uplink in the range -61 dBm

Data Source

RXLEVUL(49,49)

RXLEVUL4Range4

Received signal strength uplink in the range -106 dBm

© Copyright IBM Corp. 2008, 2009. All Rights Reserved.

Data Source

RXLEVUL(4,4)

RXLEVUL50Range50

Received signal strength uplink in the range -60 dBm

Data Source

RXLEVUL(50,50)

RXLEVUL51Range51

Received signal strength uplink in the range -59 dBm

Data Source

RXLEVUL(51,51)

RXLEVUL52Range52

Received signal strength uplink in the range -58 dBm

Data Source

RXLEVUL(52,52)

RXLEVUL53Range53

Received signal strength uplink in the range -57 dBm

Data Source

RXLEVUL(53,53)

RXLEVUL54Range54

Received signal strength uplink in the range -56 dBm

Data Source

RXLEVUL(54,54)

RXLEVUL55Range55

Received signal strength uplink in the range -55 dBm

Data Source

RXLEVUL(55,55)

RXLEVUL56Range56

Received signal strength uplink in the range -54 dBm

Data Source

RXLEVUL(56,56)

RXLEVUL57Range57

Received signal strength uplink in the range -53 dBm

Data Source

RXLEVUL(57,57)

RXLEVUL58Range58

Received signal strength uplink in the range -52 dBm

Data Source

RXLEVUL(58,58)

RXLEVUL59Range59

Received signal strength uplink in the range -51 dBm

Data Source

RXLEVUL(59,59)

RXLEVUL5Range5

Received signal strength uplink in the range -105 dBm

Data Source

RXLEVUL(5,5)

RXLEVUL60Range60

Received signal strength uplink in the range -50 dBm

Data Source

RXLEVUL(60,60)

RXLEVUL61Range61

Received signal strength uplink in the range -49 dBm

© Copyright IBM Corp. 2008, 2009. All Rights Reserved.

Data Source

RXLEVUL(61,61)

RXLEVUL62Range62

Received signal strength uplink in the range -48 dBm

Data Source

RXLEVUL(62,62)

RXLEVUL63Range63

Received signal strength uplink in the range -47 dBm

Data Source

RXLEVUL(63,63)

RXLEVUL6Range6

Received signal strength uplink in the range -104 dBm

Data Source

RXLEVUL(6,6)

RXLEVUL7Range7

Received signal strength uplink in the range -103 dBm

Data Source

RXLEVUL(7,7)

RXLEVUL8Range8

Received signal strength uplink in the range -102 dBm

Data Source

RXLEVUL(8,8)

RXLEVUL9Range9

Received signal strength uplink in the range -101 dBm

Data Source

RXLEVUL(9,9)

RXQUALDL0Range0

Received signal quality on downlink in the range 0 GSM Unit

Data Source

RXQUALDL(0,0)

RXQUALDL1Range1

Received signal quality on downlink in the range 1 GSM Unit

Data Source

RXQUALDL(1,1)

RXQUALDL2Range2

Received signal quality on downlink in the range 2 GSM Unit

Data Source

RXQUALDL(2,2)

RXQUALDL3Range3

Received signal quality on downlink in the range 3 GSM Unit

Data Source

RXQUALDL(3,3)

RXQUALDL4Range4

Received signal quality on downlink in the range 4 GSM Unit

Data Source

RXQUALDL(4,4)

RXQUALDL5Range5

Received signal quality on downlink in the range 5 GSM Unit

Data Source

RXQUALDL(5,5)

RXQUALDL6Range6

Received signal quality on downlink in the range 6 GSM Unit

© Copyright IBM Corp. 2008, 2009. All Rights Reserved.

Data Source

RXQUALDL(6,6)

RXQUALDL7Range7

Received signal quality on downlink in the range 7 GSM Unit

Data Source

RXQUALDL(7,7)

RXQUALUL0Range0

Received signal quality on uplink in the range 0 GSM Unit

Data Source

RXQUALUL(0,0)

RXQUALUL1Range1

Received signal quality on uplink in the range 1 GSM Unit

Data Source

RXQUALUL(1,1)

RXQUALUL2Range2

Received signal quality on uplink in the range 2 GSM Unit

Data Source

RXQUALUL(2,2)

RXQUALUL3Range3

Received signal quality on uplink in the range 3 GSM Unit

Data Source

RXQUALUL(3,3)

RXQUALUL4Range4

Received signal quality on uplink in the range 4 GSM Unit

Data Source

RXQUALUL(4,4)

RXQUALUL5Range5

Received signal quality on uplink in the range 5 GSM Unit

Data Source

RXQUALUL(5,5)

RXQUALUL6Range6

Received signal quality on uplink in the range 6 GSM Unit

Data Source

RXQUALUL(6,6)

RXQUALUL7Range7

Received signal quality on uplink in the range 7 GSM Unit

Data Source

RXQUALUL(7,7)

TAVAL0Range0

Actual timing advance in the range 0 GSM Unit

Data Source

TAVAL(0,0)

TAVAL104Range113

Actual timing advance in the range 104 to 113 GSM Unit

Data Source

TAVAL(104,113)

TAVAL10Range10

Actual timing advance in the range 10 GSM Unit

Data Source

TAVAL(10,10)

TAVAL114Range123

Actual timing advance in the range 114 to 123 GSM Unit

© Copyright IBM Corp. 2008, 2009. All Rights Reserved.

Data Source

TAVAL(114,123)

TAVAL11Range11

Actual timing advance in the range 11 GSM Unit

Data Source

TAVAL(11,11)

TAVAL124Range133

Actual timing advance in the range 124 to 133 GSM Unit

Data Source

TAVAL(124,133)

TAVAL12Range12

Actual timing advance in the range 12 GSM Unit

Data Source

TAVAL(12,12)

TAVAL134Range143

Actual timing advance in the range 134 to 143 GSM Unit

Data Source

TAVAL(134,143)

TAVAL13Range13

Actual timing advance in the range 13 GSM Unit

Data Source

TAVAL(13,13)

TAVAL144Range163

Actual timing advance in the range 144 to 163 GSM Unit

Data Source

TAVAL(144,163)

TAVAL14Range14

Actual timing advance in the range 14 GSM Unit

Data Source

TAVAL(14,14)

TAVAL15Range15

Actual timing advance in the range 15 GSM Unit

Data Source

TAVAL(15,15)

TAVAL164Range183

Actual timing advance in the range 164 to 183 GSM Unit

Data Source

TAVAL(164,183)

TAVAL16Range16

Actual timing advance in the range 16 GSM Unit

Data Source

TAVAL(16,16)

TAVAL17Range17

Actual timing advance in the range 17 GSM Unit

Data Source

TAVAL(17,17)

TAVAL184Range203

Actual timing advance in the range 184 to 203 GSM Unit

Data Source

TAVAL(184,203)

TAVAL18Range18

Actual timing advance in the range 18 GSM Unit

© Copyright IBM Corp. 2008, 2009. All Rights Reserved.

Data Source

TAVAL(18,18)

TAVAL19Range19

Actual timing advance in the range 19 GSM Unit

Data Source

TAVAL(19,19)

TAVAL1Range1

Actual timing advance in the range 1 GSM Unit

Data Source

TAVAL(1,1)

TAVAL204Range219

Actual timing advance in the range 204 to 219 GSM Unit

Data Source

TAVAL(204,219)

TAVAL20Range20

Actual timing advance in the range 20 GSM Unit

Data Source

TAVAL(20,20)

TAVAL21Range21

Actual timing advance in the range 21 GSM Unit

Data Source

TAVAL(21,21)

TAVAL22Range22

Actual timing advance in the range 22 GSM Unit

Data Source

TAVAL(22,22)

TAVAL23Range23

Actual timing advance in the range 23 GSM Unit

Data Source

TAVAL(23,23)

TAVAL24Range24

Actual timing advance in the range 24 GSM Unit

Data Source

TAVAL(24,24)

TAVAL25Range25

Actual timing advance in the range 25 GSM Unit

Data Source

TAVAL(25,25)

TAVAL26Range26

Actual timing advance in the range 26 GSM Unit

Data Source

TAVAL(26,26)

TAVAL27Range27

Actual timing advance in the range 27 GSM Unit

Data Source

TAVAL(27,27)

TAVAL28Range28

Actual timing advance in the range 28 GSM Unit

Data Source

TAVAL(28,28)

TAVAL29Range29

Actual timing advance in the range 29 GSM Unit

© Copyright IBM Corp. 2008, 2009. All Rights Reserved.

Data Source

TAVAL(29,29)

TAVAL2Range2

Actual timing advance in the range 2 GSM Unit

Data Source

TAVAL(2,2)

TAVAL30Range30

Actual timing advance in the range 30 GSM Unit

Data Source

TAVAL(30,30)

TAVAL31Range31

Actual timing advance in the range 31 GSM Unit

Data Source

TAVAL(31,31)

TAVAL32Range32

Actual timing advance in the range 32 GSM Unit

Data Source

TAVAL(32,32)

TAVAL33Range33

Actual timing advance in the range 33 GSM Unit

Data Source

TAVAL(33,33)

TAVAL34Range34

Actual timing advance in the range 34 GSM Unit

Data Source

TAVAL(34,34)

TAVAL35Range35

Actual timing advance in the range 35 GSM Unit

Data Source

TAVAL(35,35)

TAVAL36Range36

Actual timing advance in the range 36 GSM Unit

Data Source

TAVAL(36,36)

TAVAL37Range37

Actual timing advance in the range 37 GSM Unit

Data Source

TAVAL(37,37)

TAVAL38Range38

Actual timing advance in the range 38 GSM Unit

Data Source

TAVAL(38,38)

TAVAL39Range39

Actual timing advance in the range 39 GSM Unit

Data Source

TAVAL(39,39)

TAVAL3Range3

Actual timing advance in the range 3 GSM Unit

Data Source

TAVAL(3,3)

TAVAL40Range40

Actual timing advance in the range 40 GSM Unit

© Copyright IBM Corp. 2008, 2009. All Rights Reserved.

Data Source

TAVAL(40,40)

TAVAL41Range41

Actual timing advance in the range 41 GSM Unit

Data Source

TAVAL(41,41)

TAVAL42Range42

Actual timing advance in the range 42 GSM Unit

Data Source

TAVAL(42,42)

TAVAL43Range43

Actual timing advance in the range 43 GSM Unit

Data Source

TAVAL(43,43)

TAVAL44Range44

Actual timing advance in the range 44 GSM Unit

Data Source

TAVAL(44,44)

TAVAL45Range45

Actual timing advance in the range 45 GSM Unit

Data Source

TAVAL(45,45)

TAVAL46Range46

Actual timing advance in the range 46 GSM Unit

Data Source

TAVAL(46,46)

TAVAL47Range47

Actual timing advance in the range 47 GSM Unit

Data Source

TAVAL(47,47)

TAVAL48Range48

Actual timing advance in the range 48 GSM Unit

Data Source

TAVAL(48,48)

TAVAL49Range49

Actual timing advance in the range 49 GSM Unit

Data Source

TAVAL(49,49)

TAVAL4Range4

Actual timing advance in the range 4 GSM Unit

Data Source

TAVAL(4,4)

TAVAL50Range50

Actual timing advance in the range 50 GSM Unit

Data Source

TAVAL(50,50)

TAVAL51Range51

Actual timing advance in the range 51 GSM Unit

Data Source

TAVAL(51,51)

TAVAL52Range52

Actual timing advance in the range 52 GSM Unit

© Copyright IBM Corp. 2008, 2009. All Rights Reserved.

Data Source

TAVAL(52,52)

TAVAL53Range53

Actual timing advance in the range 53 GSM Unit

Data Source

TAVAL(53,53)

TAVAL54Range54

Actual timing advance in the range 54 GSM Unit

Data Source

TAVAL(54,54)

TAVAL55Range55

Actual timing advance in the range 55 GSM Unit

Data Source

TAVAL(55,55)

TAVAL56Range56

Actual timing advance in the range 56 GSM Unit

Data Source

TAVAL(56,56)

TAVAL57Range57

Actual timing advance in the range 57 GSM Unit

Data Source

TAVAL(57,57)

TAVAL58Range58

Actual timing advance in the range 58 GSM Unit

Data Source

TAVAL(58,58)

TAVAL59Range59

Actual timing advance in the range 59 GSM Unit

Data Source

TAVAL(59,59)

TAVAL5Range5

Actual timing advance in the range 5 GSM Unit

Data Source

TAVAL(5,5)

TAVAL60Range60

Actual timing advance in the range 60 GSM Unit

Data Source

TAVAL(60,60)

TAVAL61Range61

Actual timing advance in the range 61 GSM Unit

Data Source

TAVAL(61,61)

TAVAL62Range62

Actual timing advance in the range 62 GSM Unit

Data Source

TAVAL(62,62)

TAVAL63Range63

Actual timing advance in the range 63 GSM Unit

Data Source

TAVAL(63,63)

TAVAL64Range73

Actual timing advance in the range 64 GSM Unit

© Copyright IBM Corp. 2008, 2009. All Rights Reserved.

Data Source

TAVAL(64,73)

TAVAL6Range6

Actual timing advance in the range 6 GSM Unit

Data Source

TAVAL(6,6)

TAVAL74Range83

Actual timing advance in the range 74 GSM Unit

Data Source

TAVAL(74,83)

TAVAL7Range7

Actual timing advance in the range 7 GSM Unit

Data Source

TAVAL(7,7)

TAVAL84Range93

Actual timing advance in the range 84 GSM Unit

Data Source

TAVAL(84,93)

TAVAL8Range8

Actual timing advance in the range 8 GSM Unit

Data Source

TAVAL(8,8)

TAVAL94Range103

Actual timing advance in the range 94 to 103 GSM Unit

Data Source

TAVAL(94,103)

TAVAL9Range9

Actual timing advance in the range 9 GSM Unit

Data Source

TAVAL(9,9)

Subsystem_Number Primitive Calculations

The following is a list of primitive calculations for the Subsystem_Number entity.

GRAPHmultiLineSeparator

Special Control Field for Multi-Line Graphs

Calculation

```
""
```

NUMDAYS

of days in Report

Calculation

```
DAYSINREPORT()
```

NUMHOURS

of hours in Summation Data

Calculation

Subsystem_Number Peg Counts

The following is a list of peg counts for the Subsystem_Number entity.

COMINCINT

Total incoming intermediate node connection oriented messages per destination SSN.

Data Source

BSC_IOG20_APG40

Source Field

COMINCINT

© Copyright IBM Corp. 2008, 2009. All Rights Reserved.

Source Section

SS7SCSUBSY

COMOUTINT

Total outgoing intermediate node connection oriented messages per destination SSN.

Data Source

BSC_IOG20_APG40

Source Field

COMOUTINT

Source Section

SS7SCSUBSY

COMSGORIG

Total connection oriented messages originating per destination SSN.

Data Source

BSC_IOG20_APG40

Source Field

COMSGORIG

Source Section

SS7SCSUBSY

COMSGTERM

Total connection oriented messages terminating per local SSN.

Data Source

BSC_IOG20_APG40

Source Field

COMSGTERM

Source Section

SS7SCSUBSY

DT1ORIG

DT1 originating per local SSN

Data Source

BSC_IOG20_APG40

Source Field

DT1ORIG

Source Section

SS7SCSUBSY

DT1TERM

Data Form 1 (DT1) terminating per local SSN.

Data Source

BSC_IOG20_APG40

Source Field

DT1TERM

Source Section

SS7SCSUBSY

PERLEN

Period Length

Super_Channel Primitive Calculations

The following is a list of primitive calculations for the Super_Channel entity.

GRAPHmultiLineSeparator

Special Control Field for Multi-Line Graphs

Calculation

""

NUMDAYS

of days in Report

© Copyright IBM Corp. 2008, 2009. All Rights Reserved.

Calculation

```
DAYSINREPORT()
```

NUMHOURS

of hours in Summation Data

Super_Channel Peg Counts

The following is a list of peg counts for the Super_Channel entity.

AVDELDLSCBUF

Indicates the average delay of CS frames and PS frames in the super channel buffers downlink, in the PGW

Data Source

BSC_APG40

Source Field

AVDELDLSCBUF

Source Section

SUPERCH

AVDELULSCBUF

Indicates the average delay of CS frames and PS frames in the super channel buffers uplink, in the BTS

Data Source

BSC_APG40

Source Field

AVDELULSCBUF

Source Section

SUPERCH

DL7075SCLOAD

Counts the number of scans where the traffic load was between 70% and 75%, DL. Calculated in PGW

Data Source

BSC_APG40

Source Field

DL7075SCLOAD

Source Section

SUPERCH2

DL7680SCLOAD

Counts the number of scans where the traffic load was between 76% and 80%, DL. Calculated in PGW

Data Source

BSC_APG40

Source Field

DL7680SCLOAD

Source Section

SUPERCH2

DL8185SCLOAD

Counts the number of scans where the traffic load was between 81% and 85%, DL. Calculated in PGW

Data Source

BSC_APG40

Source Field

DL8185SCLOAD

Source Section

SUPERCH2

DL8690SCLOAD

Counts the number of scans where the traffic load was between 86% and 90%, DL. Calculated in PGW

© Copyright IBM Corp. 2008, 2009. All Rights Reserved.

Data Source

BSC_APG40

Source Field

DL8690SCLOAD

Source Section

SUPERCH2

DL9195SCLOAD

Counts the number of scans where the traffic load was between 91% and 95%, DL. Calculated in PGW

Data Source

BSC_APG40

Source Field

DL9195SCLOAD

Source Section

SUPERCH2

DL9600SCLOAD

Counts the number of scans where the traffic load was between 96% and 100%, DL. Calculated in PGW

Data Source

BSC_APG40

Source Field

DL9600SCLOAD

Source Section

SUPERCH2

DLCSSCBUFTHR

Number of CS frames discarded in the SC buffer, DL

Data Source

BSC_APG40

Source Field

DLCSSCBUFTHR

Source Section

SUPERCH

DLPSSCBUFTHR

Number of PS frames discarded in the SC buffer, DL

Data Source

BSC_APG40

Source Field

DLPSSCBUFTHR

Source Section

SUPERCH

FCSLOSTDL

Number of lost and discarded CS frames on the DL during last recording period.

Data Source

BSC_APG40

Source Field

FCSLOSTDL

Source Section

SUPERCH

FCSLOSTUL

Number of lost and discarded CS frames on the UL during last recording period.

Data Source

BSC_APG40

© Copyright IBM Corp. 2008, 2009. All Rights Reserved.

Source Field

FCSLOSTUL

Source Section

SUPERCH

FJBUFDELDL

Accumulated jitter buffer delay on the DL

Data Source

BSC_APG40

Source Field

FJBUFDELDL

Source Section

SCABISDEL

FJBUFDELUL

Accumulated jitter buffer delay on the UL

Data Source

BSC_APG40

Source Field

FJBUFDELUL

Source Section

SCABISDEL

FJBUFDLSCAN

Number of accumulations for counter FJBUFDELDL

Data Source

BSC_APG40

Source Field

FJBUFDLSCAN

Source Section

SCABISDEL

FJBUFULSCAN

Number of accumulations for counter FJBUFDELUL

Data Source

BSC_APG40

Source Field

FJBUFULSCAN

Source Section

SCABISDEL

FPSLOSTDL

Number of lost and discarded PS frames on the DL during last recording period.

Data Source

BSC_APG40

Source Field

FPSLOSTDL

Source Section

SUPERCH

FPSLOSTUL

Number of lost and discarded PS frames on the UL during last recording period.

Data Source

BSC_APG40

Source Field

FPSLOSTUL

Source Section

SUPERCH

© Copyright IBM Corp. 2008, 2009. All Rights Reserved.

FSCBUFDELDL

Accumulated super channel buffer delay, DL

Data Source

BSC_APG40

Source Field

FSCBUFDELDL

Source Section

SCABISDEL

FSCBUFDELUL

Accumulated super channel buffer delay, UL

Data Source

BSC_APG40

Source Field

FSCBUFDELUL

Source Section

SCABISDEL

FSCBUFDLSCAN

Number of accumulations for counter FSCBUFDELDL

Data Source

BSC_APG40

Source Field

FSCBUFDLSCAN

Source Section

SCABISDEL

FSCBUFULSCAN

Number of accumulations for counter FSCBUFDELUL

Data Source

BSC_APG40

Source Field

FSCBUFULSCAN

Source Section

SCABISDEL

KBMAXREC

Maximum number of kbytes per second received by PGW in latest 15-minute interval

Data Source

BSC_APG40

Source Field

KBMAXREC

Source Section

SUPERCH

KBMAXSENT

Maximum number of kbytes per second sent by PGW in latest 15-minute interval

Data Source

BSC_APG40

Source Field

KBMAXSENT

Source Section

SUPERCH

KBREC

Accumulated number of kbytes received by the PGW

Data Source

BSC_APG40

© Copyright IBM Corp. 2008, 2009. All Rights Reserved.

Source Field

KBREC

Source Section

SUPERCH

KBSCAN

The time for which the counters KBSENT and KBREC have been accumulated

Data Source

BSC_APG40

Source Field

KBSCAN

Source Section

SUPERCH

KBSENT

Accumulated number of kbytes sent by the PGW

Data Source

BSC_APG40

Source Field

KBSENT

Source Section

SUPERCH

LOSTDLPACK

Accumulated number of lost CS and PS frames on the DL.

Data Source

BSC_APG40

Source Field

LOSTDLPACK

Source Section

SUPERCH

LOSTULPACK

Accumulated number of lost CS and PS frames on the UL.

Data Source

BSC_APG40

Source Field

LOSTULPACK

Source Section

SUPERCH

SC

Super Channel within Super Channel Group

Data Source

BSC_APG40

Source Field

SC

Source Section

SUPERCH

SCGR

Super Channel Group

Data Source

BSC_APG40

Source Field

SCGR

Source Section

SUPERCH

© Copyright IBM Corp. 2008, 2009. All Rights Reserved.

THRDLPACK

Accumulated number of CS and PS frames discarded on the DL by the PGW due to Abis overload.

Data Source

BSC_APG40

Source Field

THRDLPACK

Source Section

SUPERCH

THRULPACK

Accumulated estimation of number of CS and PS traffic frames dicarded on the UL by the BTS due to Abis overload

Data Source

BSC_APG40

Source Field

THRULPACK

Source Section

SUPERCH

TOTDLPSSCFRBUF

Counts the total number of PS frames passing through the super channel buffers downlink, in the PGW

Data Source

BSC_APG40

Source Field

TOTDLPSSCFRBUF

Source Section

SUPERCH

TOTFRDLSCBUF

Total number of CS frames passing through SC buffer, DL

Data Source

BSC_APG40

Source Field

TOTFRDLSCBUF

Source Section

SUPERCH

TOTFRULSCBUF

Total number of CS frames passing through SC buffer, UL

Data Source

BSC_APG40

Source Field

TOTFRULSCBUF

Source Section

SUPERCH

TOTULPSSCFRBUF

Total number of PS frames passing through SC buffer, UL

Data Source

BSC_APG40

Source Field

TOTULPSSCFRBUF

Source Section

SUPERCH

© Copyright IBM Corp. 2008, 2009. All Rights Reserved.

UL7075SCLOAD

Counts the number of scans where the traffic load was between 70% and 75%, UL. Calculated in PGW

Data Source

BSC_APG40

Source Field

UL7075SCLOAD

Source Section

SUPERCH2

UL7680SCLOAD

Counts the number of scans where the traffic load was between 76% and 80%, UL. Calculated in PGW

Data Source

BSC_APG40

Source Field

UL7680SCLOAD

Source Section

SUPERCH2

UL8185SCLOAD

Counts the number of scans where the traffic load was between 81% and 85%, UL. Calculated in PGW

Data Source

BSC_APG40

Source Field

UL8185SCLOAD

Source Section

SUPERCH2

UL8690SCLOAD

Counts the number of scans where the traffic load was between 86% and 90%, UL. Calculated in PGW

Data Source

BSC_APG40

Source Field

UL8690SCLOAD

Source Section

SUPERCH2

UL9195SCLOAD

Counts the number of scans where the traffic load was between 91% and 95%, UL. Calculated in PGW

Data Source

BSC_APG40

Source Field

UL9195SCLOAD

Source Section

SUPERCH2

UL9600SCLOAD

Counts the number of scans where the traffic load was between 96% and 100%, UL. Calculated in PGW

Data Source

BSC_APG40

Source Field

UL9600SCLOAD

Source Section

SUPERCH2

© Copyright IBM Corp. 2008, 2009. All Rights Reserved.

ULPSSCBUFTHR

Counts the number of PS frames discarded in the super channel buffers uplink, in the BTS

Data Source

BSC_APG40

Source Field

ULPSSCBUFTHR

Source Section

SUPERCH

ULSCBUFTHR

Number of CS frames discarded in the SC buffer, UL

Data Source

BSC_APG40

Source Field

ULSCBUFTHR

Source Section

SUPERCH

SUPPSERVICE Primitive Calculations

The following is a list of primitive calculations for the SUPPSERVICE entity.

GRAPHmultiLineSeparator

Special Control Field for Multi-Line Graphs

Calculation

```
""
```

INTERVALS

Number of 60 minute intervals covered

Calculation

```
PERLEN / (1.0 * 60)
```

Updated: 2009-07-22

LocalName

SUPPSERVICE Name

Calculation

```
LocalKey
```

NUMDAYS

of days in Report

Calculation

```
DAYSINREPORT()
```

NUMHOURS

of hours in Summation Data

Calculation

VENDORTECH

Vendor Technology

Calculation

```
isNull( PERLEN ) ? nullString() : "EricssonGSM"
```

SUPPSERVICE Peg Counts

The following is a list of peg counts for the SUPPSERVICE entity.

MSC_RELEASE

Release

NSSINTTOT

Number of interrogations to VLR

Data Source

MSC_IOG20_APG40

Source Field

NSSINTTOT

© Copyright IBM Corp. 2008, 2009. All Rights Reserved.

Source Section

SUPPLSERV

NSSINVTOT

Number of invocations

Data Source

MSC_IOG20_APG40

Source Field

NSSINVTOT

Source Section

SUPPLSERV

NSSIT1TOT

Number of interrogations by subscribers from OP1

Data Source

MSC_IOG20_APG40

Source Field

NSSIT1TOT

Source Section

SUPPLSERV

NSSIT2TOT

Number of interrogations by subscribers from OP2

Data Source

MSC_IOG20_APG40

Source Field

NSSIT2TOT

Source Section

SUPPLSERV

NSSIV1TOT

Number of invocations by subscribers from OP1

Data Source

MSC_IOG20_APG40

Source Field

NSSIV1TOT

Source Section

SUPPLSERV

NSSIV2TOT

Number of invocations by subscribers from OP2

Data Source

MSC_IOG20_APG40

Source Field

NSSIV2TOT

Source Section

SUPPLSERV

NSSIVS1TOT

successful USSD requests made by subscribers from operator 1 in the MSC/VLR

Data Source

MSC_IOG20_APG40

Source Field

NSSIVS1TOT

Source Section

SUPPLSERV

NSSIVS2TOT

successful USSD requests made by subscribers from operator 2 in the MSC/VLR

© Copyright IBM Corp. 2008, 2009. All Rights Reserved.

Data Source

MSC_IOG20_APG40

Source Field

NSSIVS2TOT

Source Section

SUPPLSERV

NSSIVSTOT

successful USSD requests made by subscribers not belonging to operator 1 or operator 2 in the MSC/VLR

Data Source

MSC_IOG20_APG40

Source Field

NSSIVSTOT

Source Section

SUPPLSERV

NSSRETTOT

retrievals of held call for subscribers not belonging to operator 1 and operator 2 in MSC/VLR

Data Source

MSC_IOG20_APG40

Source Field

NSSRETTOT

Source Section

SUPPLSERV

NSSRT1TOT

Number of retrievals of held call for subscribers of operator 1 in MSC/VLR

Data Source

MSC_IOG20_APG40

Source Field

NSSRT1TOT

Source Section

SUPPLSERV

NSSRT2TOT

Number of retrievals of held call for subscribers of operator 2 in MSC/VLR

Data Source

MSC_IOG20_APG40

Source Field

NSSRT2TOT

Source Section

SUPPLSERV

PERLEN

Period Length

Switch_Netw_Terminal Primitive Calculations

The following is a list of primitive calculations for the Switch_Netw_Terminal entity.

GRAPHmultiLineSeparator

Special Control Field for Multi-Line Graphs

Calculation

```
""
```

NUMDAYS

of days in Report

Calculation

```
DAYSINREPORT()
```

© Copyright IBM Corp. 2008, 2009. All Rights Reserved.

NUMHOURS

of hours in Summation Data

Calculation

Switch_Netw_Terminal Peg Counts

The following is a list of peg counts for the Switch_Netw_Terminal entity.

BLOL

Number of blocked SRSs.Incremented when an SRS unit is manually or automatically blocked. Decremented when an SRS unit is manually or automatically deblocked. It should be noted that an SRS unit is considered blocked when both plane A and plane B are blocked and likewise the SRS unit is considered deblocked when either plane A or plane B is deblocked.

Data Source

BSC_IOG20_APG40

Source Field

BLOL

Source Section

SNT

NBLOCACC

Accumulated number of blocked devices

Data Source

BSC_IOG20_APG40

Source Field

NBLOCACC

Source Section

SNT

NDEV

Number of connected SRSs. Incremented every time an SRS unit is connected. Decremented when an SRS unit is disconnected.

Data Source

BSC_IOG20_APG40

Source Field

NDEV

Source Section

SNT

PERLEN

Period Length

Synchr_Digi_paths Primitive Calculations

The following is a list of primitive calculations for the Synchr_Digi_paths entity.

GRAPHmultiLineSeparator

Special Control Field for Multi-Line Graphs

Calculation

```
""
```

NUMDAYS

of days in Report

Calculation

```
DAYSINREPORT()
```

NUMHOURS

of hours in Summation Data

Calculation

System Primitive Calculations

The following is a list of primitive calculations for the System entity.

GRAPHmultiLineSeparator

Special Control Field for Multi-Line Graphs

© Copyright IBM Corp. 2008, 2009. All Rights Reserved.

Calculation

```
""
```

NUMDAYS

of days in Report

Calculation

```
DAYSINREPORT()
```

NUMHOURS

of hours in Summation Data

Calculation

PercentActiveSubscribers

Percent Active Subscribers

Calculation

```
sum(MSC.HLRSubs[subString(LocalKey, 1, 6) = "420608"], NHLRREGAST) * 100.0
/ sum(HLR, NSUBSCNT)
```

PercentRegisteredSubscribers

Percent Registered Subscribers

Calculation

```
sum(MSC.HLRSubs[subString(LocalKey, 1, 6) = "420608"],NHLRMSST ) * 100.0 /
sum(HLR, NSUBSCNT)
```

pTotalGGSNPacketSuccessRate

Total GGSN Packet Success Rate is the Total Average Success Factor of the overall Packets sent to and Received from ALL GGSNs

Calculation

```
aggr( GSNType.GSN, pGGSNPacketSuccessRate )
```

pTotalSessionManSuccessRateGGSN

Total Session Management Success Rate

Calculation

```
aggr( GSNType.GSN, pSessionManSuccessRateGGSN )
```

RegisteredInroamers

Registered Inroamers

Calculation

```
sum(MSC.HLRSubs[subString(LocalKey, 1, 6) != "420608"], NHLRMSST)
```

RegisteredOutroamer

Registered Outroamers

Calculation

```
sum(HLR.PLMN[subString(LocalKey, 1, 6) != "420608"], vsum( GPPERPLMNCNT,
PERPLMNCNT ))
```

SubscribersHLR

Subscribers in HLR

Calculation

```
AGGR(HLR, NSUBSCNT)
```

SubscribersVLR

Subscribers in VLR

Calculation

```
sum(MSC.HLRSubs[subString(LocalKey, 1, 6) = "420608"], NHLRMSST)
```

TotalCellTCHTraffic

Average TCH/F Traffic Level

Calculation

```
protect(sum(MSC.BSC.BTSSite.Cell, TCF_TRAFF_VOL))
```

TotalSwitchedTraffic

Generates a predefined graph showing total switch traffic in the network and total air traffic

Calculation

```
sum(MSC, TotalSwitchedTraffic)
```

TCAP_Obj Primitive Calculations

The following is a list of primitive calculations for the TCAP_Obj entity.

© Copyright IBM Corp. 2008, 2009. All Rights Reserved.

GRAPHmultiLineSeparator

Special Control Field for Multi-Line Graphs

Calculation

```
""
```

INTERVALS

Number of 60 minute intervals covered

Calculation

```
PERLEN / (1.0 * 60)
```

NUMDAYS

of days in Report

Calculation

```
DAYSINREPORT()
```

NUMHOURS

of hours in Summation Data

Calculation

VENDORTECH

Vendor Technology

Calculation

```
isNull( PERLEN ) ? nullString() : "EricssonGSM"
```

TCAP_Obj Peg Counts

The following is a list of peg counts for the TCAP_Obj entity.

DETECT

Numbers of situations when reject is detected by TC

Data Source

MSC_IOG20_APG40

Source Field

DETECT

Source Section

TCREJ

MSC_RELEASE

Release

PERLEN

Period Length

RECEIVED_TCCMP

Number of components received

Data Source

MSC_IOG20_APG40

Source Field

RECEIVED

Source Section

TCCMP

RECEIVED_TCDIA

Number of dialogue portions received

Data Source

MSC_IOG20_APG40

Source Field

RECEIVED

Source Section

TCDIA

RECEIVED_TCMSG

Number of messages received

© Copyright IBM Corp. 2008, 2009. All Rights Reserved.

Data Source

MSC_IOG20_APG40

Source Field

RECEIVED

Source Section

TCMSG

SENT_TCCMP

Number of components sent

Data Source

MSC_IOG20_APG40

Source Field

SENT

Source Section

TCCMP

SENT_TCDIA

Number of dialogue portions sent

Data Source

MSC_IOG20_APG40

Source Field

SENT

Source Section

TCDIA

SENT_TCMSG

Number of messages sent

Data Source

MSC_IOG20_APG40

Source Field

SENT

Source Section

TCMSG

URECEIVED

Number of rejects received by TC-user

Data Source

MSC_IOG20_APG40

Source Field

URECEIVED

Source Section

TCREJ

USENT

Number of rejects sent by TC-user

Data Source

MSC_IOG20_APG40

Source Field

USENT

Source Section

TCREJ

TCAP_SubSystem Primitive Calculations

The following is a list of primitive calculations for the TCAP_SubSystem entity.

GRAPHmultiLineSeparator

Special Control Field for Multi-Line Graphs

Calculation

""

© Copyright IBM Corp. 2008, 2009. All Rights Reserved.

INTERVALS

Number of 60 minute intervals covered

Calculation

```
PERLEN / (1.0 * 60)
```

NUMDAYS

of days in Report

Calculation

```
DAYSINREPORT()
```

NUMHOURS

of hours in Summation Data

Calculation

VENDORTECH

Vendor Technology

Calculation

```
isNull( PERLEN ) ? nullString() : "EricssonGSM"
```

TCAP_SubSystem Peg Counts

The following is a list of peg counts for the TCAP_SubSystem entity.

MSC_RELEASE

Release

NMSGDLVDSSN

Number of messages successfully delivered to specific application

Data Source

MSC_IOG20_APG40

Source Field

NMSGDLVDSSN

Source Section

TPLAT

NMSGORIGSSN

Number of messages originated from a specific application

Data Source

MSC_IOG20_APG40

Source Field

NMSGORIGSSN

Source Section

TPLAT

PERLEN

Period Length

Time_Slot Primitive Calculations

The following is a list of primitive calculations for the Time_Slot entity.

GRAPHmultiLineSeparator

Special Control Field for Multi-Line Graphs

Calculation

```
""
```

INTERVALS

Number of 60 minute intervals covered

Calculation

```
PERLEN / (1.0 * 60)
```

NUMDAYS

of days in Report

Calculation

```
DAYSINREPORT()
```

© Copyright IBM Corp. 2008, 2009. All Rights Reserved.

NUMHOURS

of hours in Summation Data

Calculation

Time_Slot Peg Counts

The following is a list of peg counts for the Time_Slot entity.

BSS_RELEASE

Release

CONCNT

Connection set up attempt

Data Source

BSC_IOG20_APG40

Source Field

CONCNT

Source Section

MOTS

CONERRCNT

Time out or radio link failure

Data Source

BSC_IOG20_APG40

Source Field

CONERRCNT

Source Section

MOTS

ID1_MOTS

State

Data Source

BSC_IOG20_APG40

Source Field

ID1

Source Section

MOTS

ID2_MOTS

Block number

Data Source

BSC_IOG20_APG40

Source Field

ID2

Source Section

MOTS

PERLEN

Period Length

TrafficType Primitive Calculations

The following is a list of primitive calculations for the TrafficType entity.

AnsSwitchedCalls

Answered Switched Calls

Calculation

```
NANSW
```

FailedSwitchedCalls

Failed Switched Calls

Calculation

```
vsum(NUNSUCC, NECONG)
```

© Copyright IBM Corp. 2008, 2009. All Rights Reserved.

GRAPHmultiLineSeparator

Special Control Field for Multi-Line Graphs

Calculation

```
""
```

INTERVALS

Number of 60 minute intervals covered

Calculation

```
PERLEN / (1.0 * 60)
```

INTERVALS_TRART

Number of 60 minute intervals covered (from TRART data)

Calculation

```
PERLEN_TRART / (1.0 * 60)
```

NANSW

B-ANSWERS

Calculation

```
nullValue(NANSW_TRAFFTYPE, NANSW_MTRAFTYPE)
```

NCALLS

Number of attempted calls

Calculation

```
nullValue(NCALLS_TRAFFTYPE, NCALLS_MTRAFTYPE)
```

NECONG

EXTERNAL CONG

Calculation

```
nullValue(NECONG_TRAFFTYPE, NECONG_MTRAFTYPE)
```

NICONG

INTERNAL CONG

Calculation

```
nullValue(NICONG_TRAFFTYPE, NICONG_MTRAFTYPE)
```

NSCAN

Number of accumulations

Calculation

```
nullValue(NSCAN_TRAFFTYPE, NSCAN_MTRAFTYPE)
```

NTRALACC

TRAFFIC LEVEL

Calculation

```
nullValue(NTRALACC_TRAFFTYPE, NTRALACC_MTRAFTYPE)
```

NUMDAYS

of days in Report

Calculation

```
DAYSINREPORT()
```

NUMHOURS

of hours in Summation Data

Calculation

NUNSUCC

CALL ATTEMPTS

Calculation

```
nullValue(NUNSUCC_TRAFFTYPE, NUNSUCC_MTRAFTYPE)
```

PercentageAnsweredSwitchedCalls

Percentage Answered Switched Calls

Calculation

```
(100 * NANSW) / (1.0 * vsum(NCALLS, -1.0 * NICONG))
```

PercentageFailedSwitchedCalls

Percentage Failed Switched Calls

Calculation

```
(100 * vsum(NUNSUCC, NECONG)) / (1.0 * vsum(NCALLS, -1.0 * NICONG))
```

© Copyright IBM Corp. 2008, 2009. All Rights Reserved.

SwitchedAttmpt

Switched Attempt

Calculation

```
NCALLS
```

SwitchedCalls

Switched Calls

Calculation

```
vsum(NCALLS, -1.0 * NICONG)
```

SwitchedTraffic

Switched Traffic

Calculation

```
NTRALACC / (1.0 * NSCAN)
```

TT_AnsBidRatio

Percentage Answers:Bid Ratio

Calculation

```
NANSW * 100.0 / NCALLS
```

TT_AnsSeizeRatio

Percentage Answers:Seize Ratio

Calculation

```
NANSW * 100.0 / TT_Seizures
```

TT_RejCalls

Number of Seizures

Calculation

```
vsum(NUNSUCC, NICONG, NECONG)
```

TT_Seizures

Number of Seizures

Calculation

```
vsum(NCALLS, -1 * NUNSUCC, -1 * NICONG, -1 * NECONG)
```

TT_Traffic

Traffic Level in Erlangs

Calculation

```
NTRALACC / (1.0 * NSCAN)
```

VENDORTECH

Vendor Technology

Calculation

```
isNull( PERLEN ) ? nullString() : "EricssonGSM"
```

TrafficType Peg Counts

The following is a list of peg counts for the TrafficType entity.

MSC_RELEASE

Release

NANSW_MTRAFTYPE

Number of answers,renewed answers are not counted

Data Source

MSC_IOG20_APG40

Source Field

NANSW

Source Section

MTRAFTYPE

NANSW_TRAFFTYPE

B-ANSWERS

Data Source

MSC_IOG20_APG40

Source Field

NANSW

© Copyright IBM Corp. 2008, 2009. All Rights Reserved.

Source Section

TRAFFTYPE

NAREPLACE

DUE A-REPLACEMENT

Data Source

MSC_IOG20_APG40

Source Field

NAREPLACE

Source Section

TRAFFTYPE

NBLOBY

Accumulated value of the number of blocked both-way devices

Data Source

MSC_TRART

Source Field

NBLOBY

Source Section

ASC_TRART

NBLOOY

Accumulated value of the number of blocked one-way devices

Data Source

MSC_TRART

Source Field

NBLOOY

Source Section

ASC_TRART

NBUSY

REJ, BUSY B-SUB

Data Source

MSC_IOG20_APG40

Source Field

NBUSY

Source Section

TRAFFTYPE

NCALLS_MTRAFTYPE

Number of calls recognized by the register function

Data Source

MSC_IOG20_APG40

Source Field

NCALLS

Source Section

MTRAFTYPE

NCALLS_TRAFFTYPE

CALLS ATTEMPTS

Data Source

MSC_IOG20_APG40

Source Field

NCALLS

Source Section

TRAFFTYPE

NCONGSIG

DUE CONGESTION

© Copyright IBM Corp. 2008, 2009. All Rights Reserved.

Data Source

MSC_IOG20_APG40

Source Field

NCONGSIG

Source Section

TRAFFTYPE

NDVB

Number of both-way devices

Data Source

MSC_TRART

Source Field

NDVB

Source Section

ASC_TRART

NDVO

Number of one-way devices

Data Source

MSC_TRART

Source Field

NDVO

Source Section

ASC_TRART

NECONG_MTRAFTYPE

calls rejected due to external congestion, I.E. congestion due to lack of outgoing trunks

Data Source

MSC_IOG20_APG40

Source Field

NECONG

Source Section

MTRAFTYPE

NECONG_TRAFFTYPE

EXTERNAL CONG

Data Source

MSC_IOG20_APG40

Source Field

NECONG

Source Section

TRAFFTYPE

NFAULTSIG

DUE FAULTY SIGNA

Data Source

MSC_IOG20_APG40

Source Field

NFAULTSIG

Source Section

TRAFFTYPE

NICONG_MTRAFTYPE

calls rejected due to internal congestion,I.E. congestion in group switch,too many reselections of 0utgoing route, or congestion at seizure of RE complex and block CLCOF

Data Source

MSC_IOG20_APG40

© Copyright IBM Corp. 2008, 2009. All Rights Reserved.

Source Field

NICONG

Source Section

MTRAFTYPE

NICONG_TRAFFTYPE

INTERNAL CONG

Data Source

MSC_IOG20_APG40

Source Field

NICONG

Source Section

TRAFFTYPE

NINACC

INACCESS B-NO

Data Source

MSC_IOG20_APG40

Source Field

NINACC

Source Section

TRAFFTYPE

NISDNCALLS

CALLS

Data Source

MSC_IOG20_APG40

Source Field

NISDNCALLS

Source Section

TRAFFTYPE

NLKPDSIG

DUE PROC SEND SIG

Data Source

MSC_IOG20_APG40

Source Field

NLKPDSIG

Source Section

TRAFFTYPE

NNMBLOC

REJ, NM ACTION

Data Source

MSC_IOG20_APG40

Source Field

NNMBLOC

Source Section

TRAFFTYPE

NNONEX

NONEXIST B-SUB

Data Source

MSC_IOG20_APG40

Source Field

NNONEX

Source Section

TRAFFTYPE

© Copyright IBM Corp. 2008, 2009. All Rights Reserved.

NRELAFTD

REL AFT DIAL

Data Source

MSC_IOG20_APG40

Source Field

NRELAFTD

Source Section

TRAFFTYPE

NRELBEFD

REL BEF DIAL

Data Source

MSC_IOG20_APG40

Source Field

NRELBEFD

Source Section

TRAFFTYPE

NRELDURD

REL DUR DIAL

Data Source

MSC_IOG20_APG40

Source Field

NRELDURD

Source Section

TRAFFTYPE

NSCAN_MTRAFTYPE

Number of accumulated Values in NTRALACC

Data Source

MSC_IOG20_APG40

Source Field

NSCAN

Source Section

MTRAFTYPE

NSCAN_TRAFFTYPE

ACCUMULATIONS

Data Source

MSC_IOG20_APG40

Source Field

NSCAN

Source Section

TRAFFTYPE

NSUEOS

Number of successful end-of-selections

Data Source

MSC_IOG20_APG40

Source Field

NSUEOS

Source Section

MTRAFTYPE

NTHCON

CONNECTED CALLS

Data Source

MSC_IOG20_APG40

© Copyright IBM Corp. 2008, 2009. All Rights Reserved.

Source Field

NTHCON

Source Section

TRAFFTYPE

NTIMEOUT

DUE TIME LIM OWFL

Data Source

MSC_IOG20_APG40

Source Field

NTIMEOUT

Source Section

TRAFFTYPE

NTOBEFD

T.O. BEF DIAL

Data Source

MSC_IOG20_APG40

Source Field

NTOBEFD

Source Section

TRAFFTYPE

NTODURD

T.O. DUR DIAL

Data Source

MSC_IOG20_APG40

Source Field

NTODURD

Source Section

TRAFFTYPE

NTRALACC_MTRAFTYPE

Accumulates the value of TRAL per NSCAN interval

Data Source

MSC_IOG20_APG40

Source Field

NTRALACC

Source Section

MTRAFTYPE

NTRALACC_TRAFFTYPE

TRAFFIC LEVEL

Data Source

MSC_IOG20_APG40

Source Field

NTRALACC

Source Section

TRAFFTYPE

NUNSUCC_MTRAFTYPE

unsuccessful calls, I.E. congestion due to auxiliary device groups, common control groups and calls lost to technical faults within the exchange, or time-out

Data Source

MSC_IOG20_APG40

Source Field

NUNSUCC

© Copyright IBM Corp. 2008, 2009. All Rights Reserved.

Source Section

MTRAFTYPE

NUNSUCC_TRAFFTYPE

CALL ATTEMPTS

Data Source

MSC_IOG20_APG40

Source Field

NUNSUCC

Source Section

TRAFFTYPE

PERLEN

Period Length

PERLEN_TRART

Period Length (of TRAR data)

TRAL_MTRAFTYPE

Traffic level, number of ongoing through-connected calls

Data Source

MSC_IOG20_APG40

Source Field

TRAL

Source Section

MTRAFTYPE

TRAL_TRAFFTYPE

OCCUPIED DEVICES

Data Source

MSC_IOG20_APG40

Source Field

TRAL

Source Section

TRAFFTYPE

TraffOrigin Primitive Calculations

The following is a list of primitive calculations for the TraffOrigin entity.

GRAPHmultiLineSeparator

Special Control Field for Multi-Line Graphs

Calculation

```
""
```

LocalName

TraffOrigin Name

Calculation

```
LocalKey
```

NUMDAYS

of days in Report

Calculation

```
DAYSINREPORT()
```

NUMHOURS

of hours in Summation Data

Calculation

Transceiver_Group Primitive Calculations

The following is a list of primitive calculations for the Transceiver_Group entity.

GRAPHmultiLineSeparator

Special Control Field for Multi-Line Graphs

© Copyright IBM Corp. 2008, 2009. All Rights Reserved.

Calculation

```
""
```

NUMDAYS

of days in Report

Calculation

```
DAYSINREPORT()
```

NUMHOURS

of hours in Summation Data

Calculation

Transceiver_Group Peg Counts

The following is a list of peg counts for the Transceiver_Group entity.

AVG16K

Average number of idle 16 kbps Abis paths in non-64KRES pool during last 15 minutes, calculated from samples taken every minute

Data Source

BSC_IOG20_APG40

Source Field

AVG16K

Source Section

NONRES64K

AVG64K

Average number of idle 64 kbps Abis paths in 64KRES pool during last 15 minutes, calculated from samples taken every minute. Mean over time and Mean over space.

Data Source

BSC_IOG20_APG40

Source Field

AVG64K

Source Section

RES64K

BSS_Release

Release

BUNDG0AVEDL

Average bundling delay for the LAPD Bundling Group in TG containing SAPI = 0 (RSL)

Data Source

BSC_APG40

Source Field

BUNDG0AVEDL

Source Section

ABISTG

BUNDG1AVEDL

Average bundling delay for the LAPD Bundling Group in TG containing SAPI = 10 (Speech)

Data Source

BSC_APG40

Source Field

BUNDG1AVEDL

Source Section

ABISTG

BUNDG2AVEDL

Average bundling delay for the LAPD Bundling Group in TG containing SAPI =11 (CS data)

Data Source

BSC_APG40

© Copyright IBM Corp. 2008, 2009. All Rights Reserved.

Source Field

BUNDG2AVEDL

Source Section

ABISTG

BUNDG3AVEDL

Average bundling delay for the LAPD Bundling Group in TG containing SAPI = 12 (GPRS/EDGE)

Data Source

BSC_APG40

Source Field

BUNDG3AVEDL

Source Section

ABISTG

BUNDG4AVEDL

Average bundling delay for the LAPD Bundling Group in TG containing SAPI = 62 (OML)

Data Source

BSC_APG40

Source Field

BUNDG4AVEDL

Source Section

ABISTG

CSDISCOVL

The number of discarded CS frames DL at IP overload actions

Data Source

BSC_APG40

Source Field

CSDISCOVL

Source Section

ABISIP

DL0025JITBUFDEL

Counts the number of CS frames where the jitter buffer delay DL was between 0% and 25% of the jitter buffer size setting. Calculated in the BTS.

Data Source

BSC_APG40

Source Field

DL0025JITBUFDEL

Source Section

ABISTG

DL100JITBUFDEL

Counts the number of CS frames where the jitter buffer delay DL was more than 100% of the jitter buffer size setting. Calculated in the BTS.

Data Source

BSC_APG40

Source Field

DL100JITBUFDEL

Source Section

ABISTG

DL100STNLOAD

Number of scans where the traffic load on the PGW - STN link was above 100%, DL

Data Source

BSC_APG40

© Copyright IBM Corp. 2008, 2009. All Rights Reserved.

Source Field

DL100STNLOAD

Source Section

ABISIP

DL2650JITBUFDEL

Counts the number of CS frames where the jitter buffer delay DL was between 26% and 50% of the jitter buffer size setting. Calculated in the BTS.

Data Source

BSC_APG40

Source Field

DL2650JITBUFDEL

Source Section

ABISTG

DL5175JITBUFDEL

Counts the number of CS frames where the jitter buffer delay DL was between 51% and 75% of the jitter buffer size setting. Calculated in the BTS.

Data Source

BSC_APG40

Source Field

DL5175JITBUFDEL

Source Section

ABISTG

DL7075STNLOAD

Number of scans where the traffic load on the PGW - STN link was between 70% and 75%, DL

Data Source

BSC_APG40

Source Field

DL7075STNLOAD

Source Section

ABISIP

DL7600JITBUFDEL

Counts the number of CS frames where the jitter buffer delay DL was between 76% and 100% of the jitter buffer size setting. Calculated in the BTS.

Data Source

BSC_APG40

Source Field

DL7600JITBUFDEL

Source Section

ABISTG

DL7680STNLOAD

Number of scans where the traffic load on the PGW - STN link was between 76% and 80%, DL

Data Source

BSC_APG40

Source Field

DL7680STNLOAD

Source Section

ABISIP

DL8185STNLOAD

Number of scans where the traffic load on the PGW - STN link was between 81% and 85%, DL

Data Source

BSC_APG40

© Copyright IBM Corp. 2008, 2009. All Rights Reserved.

Source Field

DL8185STNLOAD

Source Section

ABISIP

DL8690STNLOAD

Number of scans where the traffic load on the PGW - STN link was between 86% and 90%, DL

Data Source

BSC_APG40

Source Field

DL8690STNLOAD

Source Section

ABISIP

DL9195STNLOAD

Number of scans where the traffic load on the PGW - STN link was between 91% and 95%, DL

Data Source

BSC_APG40

Source Field

DL9195STNLOAD

Source Section

ABISIP

DL9600STNLOAD

Number of scans where the traffic load on the PGW - STN link was between 96% and 100%, DL

Data Source

BSC_APG40

Source Field

DL9600STNLOAD

Source Section

ABISIP

DLDROPJBUF

Counts the number of discarded CS frames in jitter buffer, DL. Calculated in the BTS.

Data Source

BSC_APG40

Source Field

DLDROPJBUF

Source Section

ABISTG

DLJITBUFAVDEL

Counts the average jitter buffer delay on the DL. Calculated in the BTS.

Data Source

BSC_APG40

Source Field

DLJITBUFAVDEL

Source Section

ABISTG

FRAG64K

Fragmentation level of the 64KRES pool, i.e. the number of fragmented (partly used) 64 kbps Abis paths in the 64KRES pool

Data Source

BSC_IOG20_APG40

© Copyright IBM Corp. 2008, 2009. All Rights Reserved.

Source Field

FRAG64K

Source Section

RES64K

ID1

State

Data Source

BSC_IOG20_APG40

Source Field

ID1

Source Section

MOTG

ID2

Block number

Data Source

BSC_IOG20_APG40

Source Field

ID2

Source Section

MOTG

INTERCNT

Intermittent faults. Incremented when an intermittent fault is reported on one of the managed objects within the TG.

Data Source

BSC_IOG20_APG40

Source Field

INTERCNT

Source Section

MOTG

IPDLSENTPACK

Accumulated number of IP packets sent DL on the PGW - STN link

Data Source

BSC_APG40

Source Field

IPDLSENTPACK

Source Section

ABISIP

IPLOSTPACKUL

Accumulated number of IP packets either lost on the UL or received with a checksum error

Data Source

BSC_APG40

Source Field

IPLOSTPACKUL

Source Section

ABISIP

IPNUMSCAN

The time for which the counters IPSENTKBYTES and IPRECKBYTES have been accumulated

Data Source

BSC_APG40

© Copyright IBM Corp. 2008, 2009. All Rights Reserved.

Source Field

IPNUMSCAN

Source Section

ABISIP

IPOVLL1

Indicates the number of level 1 actions taken to solve overload on Abis

Data Source

BSC_APG40

Source Field

IPOVLL1

Source Section

ABISIP

IPOVLL2

Indicates the number of level 2 actions taken to solve overload on Abis

Data Source

BSC_APG40

Source Field

IPOVLL2

Source Section

ABISIP

IPRECKBYTES

Total amount of traffic received by the PGW

Data Source

BSC_APG40

Source Field

IPRECKBYTES

Source Section

ABISIP

IPSENTKBYTES

Total amount of traffic sent by the PGW

Data Source

BSC_APG40

Source Field

IPSENTKBYTES

Source Section

ABISIP

IPULRECPACK

Accumulated number of IP packets received UL on the PGW - STN link

Data Source

BSC_APG40

Source Field

IPULRECPACK

Source Section

ABISIP

MAX16K

Maximum number of idle 16 kbps Abis paths in non-64KRES pool during last 15 minutes, calculated from samples taken every minute. Aggregation C display the maximum and pass through aggregation unchanged and means Max over time and Max over space.

Data Source

BSC_IOG20_APG40

Source Field

MAX16K

© Copyright IBM Corp. 2008, 2009. All Rights Reserved.

Source Section

NONRES64K

MAX64K

Maximum number of idle 64 kbps Abis paths in 64KRES pool during last 15 minutes, calculated from samples taken every minute. Aggregation C display the maximum and pass through aggregation unchanged and means Max over time and Max over space.

Data Source

BSC_IOG20_APG40

Source Field

MAX64K

Source Section

RES64K

MIN16K

Minimum number of idle 16 kbps Abis paths in non-64KRES pool during last 15 minutes, calculated from samples taken every minute. It passes through aggregation unchanged and displays the minimum. Aggregation M means minimum over time and minimum over space.

Data Source

BSC_IOG20_APG40

Source Field

MIN16K

Source Section

NONRES64K

MIN64K

Minimum number of idle 64 kbps Abis paths in 64KRES pool during last 15 minutes, calculated from samples taken every minute. It passes through aggregation unchanged and displays the minimum. Aggregation M means minimum over time and minimum over space.

Data Source

BSC_IOG20_APG40

Source Field

MIN64K

Source Section

RES64K

PERLEN

Period Length

PSDISCOVL

The number of discarded PS frames DL at IP overload actions

Data Source

BSC_APG40

Source Field

PSDISCOVL

Source Section

ABISIP

PSUINSBMD

Number of minutes a PSU is in standby mode

Data Source

BSC_APG40

Source Field

PSUINSBMD

Source Section

MOTG

TG_ID

Managed Object identity for Transceiver Group

© Copyright IBM Corp. 2008, 2009. All Rights Reserved.

TRASYNCCNT

TRA synchronisation faults. Incremented when a TRA synchronisation fault is reported by the BTS on one of the TS

Data Source

BSC_IOG20_APG40

Source Field

TRASYNCCNT

Source Section

MOTG

UL0025JITBUFDEL

Counts the number of CS frames where the jitter buffer delay UL was between 0% and 25% of the jitter buffer size setting. Calculated in the PGW.

Data Source

BSC_APG40

Source Field

UL0025JITBUFDEL

Source Section

ABISTG

UL100JITBUFDEL

Counts the number of CS frames where the jitter buffer delay UL was more than 100% of the jitter buffer size setting. Calculated in the PGW.

Data Source

BSC_APG40

Source Field

UL100JITBUFDEL

Source Section

ABISTG

UL100STNLOAD

Number of scans where the traffic load on the PGW - STN link was above 100%, UL

Data Source

BSC_APG40

Source Field

UL100STNLOAD

Source Section

ABISIP

UL2650JITBUFDEL

Counts the number of CS frames where the jitter buffer delay UL was between 26% and 50% of the jitter buffer size setting. Calculated in the PGW.

Data Source

BSC_APG40

Source Field

UL2650JITBUFDEL

Source Section

ABISTG

UL5175JITBUFDEL

Counts the number of CS frames where the jitter buffer delay UL was between 51% and 75% of the jitter buffer size setting. Calculated in the PGW.

Data Source

BSC_APG40

Source Field

UL5175JITBUFDEL

Source Section

ABISTG

© Copyright IBM Corp. 2008, 2009. All Rights Reserved.

UL7075STNLOAD

Number of scans where the traffic load on the PGW - STN link was between 70% and 75%, UL

Data Source

BSC_APG40

Source Field

UL7075STNLOAD

Source Section

ABISIP

UL7600JITBUFDEL

Counts the number of CS frames where the jitter buffer delay UL was between 76% and 100% of the jitter buffer size setting. Calculated in the PGW

Data Source

BSC_APG40

Source Field

UL7600JITBUFDEL

Source Section

ABISTG

UL7680STNLOAD

Number of scans where the traffic load on the PGW - STN link was link was between 76% and 80%, UL.

Data Source

BSC_APG40

Source Field

UL7680STNLOAD

Source Section

ABISIP

UL8185STNLOAD

Number of scans where the traffic load on the PGW - STN link was between 81% and 85%, UL

Data Source

BSC_APG40

Source Field

UL8185STNLOAD

Source Section

ABISIP

UL8690STNLOAD

Number of scans where the traffic load on the PGW - STN link was between 86% and 90%, UL

Data Source

BSC_APG40

Source Field

UL8690STNLOAD

Source Section

ABISIP

UL9195STNLOAD

Number of scans where the traffic load on the PGW - STN link was between 91% and 95%, UL

Data Source

BSC_APG40

Source Field

UL9195STNLOAD

Source Section

ABISIP

© Copyright IBM Corp. 2008, 2009. All Rights Reserved.

UL9600STNLOAD

Number of scans where the traffic load on the PGW - STN link was between 96% and 100%, UL

Data Source

BSC_APG40

Source Field

UL9600STNLOAD

Source Section

ABISIP

ULDROPJBUF

Counts the number of discarded CS frames in jitter buffer, UL. Calculated in the PGW.

Data Source

BSC_APG40

Source Field

ULDROPJBUF

Source Section

ABISTG

ULJITBUFAVDEL

Counts the average jitter buffer delay on the UL. Calculated in the PGW.

Data Source

BSC_APG40

Source Field

ULJITBUFAVDEL

Source Section

ABISTG

Transcoder_Subpool Primitive Calculations

The following is a list of primitive calculations for the Transcoder_Subpool entity.

GRAPHmultiLineSeparator

Special Control Field for Multi-Line Graphs

Calculation

```
""
```

NUMDAYS

of days in Report

Calculation

```
DAYSINREPORT()
```

NUMHOURS

of hours in Summation Data

Calculation

Transcoder_Subpool Peg Counts

The following is a list of peg counts for the Transcoder_Subpool entity.

PERLEN

Period Length

TPSUBACTR

Active Transcoder Resources

Data Source

BSC_IOG20_APG40

Source Field

TPSUBACTR

Source Section

TRASUBPOOL

© Copyright IBM Corp. 2008, 2009. All Rights Reserved.

TPSUBAVTR

Available Transcoder Resources

Data Source

BSC_IOG20_APG40

Source Field

TPSUBAVTR

Source Section

TRASUBPOOL

TPSUBIDLTR

Idle Transcoder Resources

Data Source

BSC_IOG20_APG40

Source Field

TPSUBIDLTR

Source Section

TRASUBPOOL

TRC Primitive Calculations

The following is a list of primitive calculations for the TRC entity.

GRAPHmultiLineSeparator

Special Control Field for Multi-Line Graphs

Calculation

```
""
```

INTERVALS

Number of 60 minute intervals covered

Calculation

```
PERLEN / (1.0 * 60)
```

Updated: 2009-07-22

LocalName

TRC Name

Calculation

```
LocalKey
```

NUMDAYS

of days in Report

Calculation

```
DAYSINREPORT()
```

NUMHOURS

of hours in Summation Data

Calculation

VENDORTECH

Vendor Technology

Calculation

```
isNull( PERLEN ) ? nullString() : "EricssonGSM"
```

TRC Peg Counts

The following is a list of peg counts for the TRC entity.

ALLOCATERATP

Number of allocation attempts for Ater interface transmission devices.

Data Source

BSC_IOG20_APG40

Source Field

ALLOCATERATP

Source Section

ATERTRANS

© Copyright IBM Corp. 2008, 2009. All Rights Reserved.

ATERCONG

Number of failed allocation attempts due to Ater interface transmission congestion.

Data Source

BSC_IOG20_APG40

Source Field

ATERCONG

Source Section

ATERTRANS

AVATERTRCDEV

Information on the number of available Ater interface transmission devices per BSC in a TRC.

Data Source

BSC_IOG20_APG40

Source Field

AVATERTRCDEV

Source Section

ATERTRANS

BLATERTRCDEV

Information on the number of blocked Ater interface transmission devices per BSC in a TRC.

Data Source

BSC_IOG20_APG40

Source Field

BLATERTRCDEV

Source Section

ATERTRANS

BSS_RELEASE

Release

ID1_ATERTRANS

Transcoder Controller ID

Data Source

BSC_IOG20_APG40

Source Field

ID1

Source Section

ATERTRANS

PERLEN

Period Length

SALLOCATERATP

Total number of allocation attempts for Ater interface transmission subdevices.

Data Source

BSC_IOG20_APG40

Source Field

SALLOCATERATP

Source Section

ATERTRANS

SZATERTRCDEV

Information on the number of partly or wholly seized Ater interface transmission devices connected to a BSC in a TRC.

Data Source

BSC_IOG20_APG40

Source Field

SZATERTRCDEV

© Copyright IBM Corp. 2008, 2009. All Rights Reserved.

Source Section

ATERTRANS

SZSATERTRCDEV

Information on the number of seized Ater interface transmission subdevices connected to a BSC in a TRC.

Data Source

BSC_IOG20_APG40

Source Field

SZSATERTRCDEV

Source Section

ATERTRANS

TRCNSCAN

Number of accumulations (every 1/10th second).

Data Source

BSC_IOG20_APG40

Source Field

TRCNSCAN

Source Section

ATERTRANS

TRD Primitive Calculations

The following is a list of primitive calculations for the TRD entity.

GRAPHmultiLineSeparator

Special Control Field for Multi-Line Graphs

Calculation

""

INTERVALS

Number of 60 minute intervals covered

Calculation

```
PERLEN / (1.0 * 60)
```

LocalName

TRD Name

Calculation

```
LocalKey
```

NUMDAYS

of days in Report

Calculation

```
DAYSINREPORT()
```

NUMHOURS

of hours in Summation Data

Calculation

VENDORTECH

Vendor Technology

Calculation

```
isNull( PERLEN ) ? nullString() : "EricssonGSM"
```

TRD Peg Counts

The following is a list of peg counts for the TRD entity.

BSS_RELEASE

Release

ID1_TRAPEVENT

Transcoder Device

© Copyright IBM Corp. 2008, 2009. All Rights Reserved.

Data Source

BSC_IOG20_APG40

Source Field

ID1

Source Section

TRAPEVENT

PERLEN

Period Length

TPACC

Number of Accumulations.

Data Source

BSC_IOG20_APG40

Source Field

TPACC

Source Section

TRAPEVENT

TPACTTR

Active Transcoder Resources. Shows the number of active transcoder resources in a transcoder pool.

Data Source

BSC_IOG20_APG40

Source Field

TPACTTR

Source Section

TRAPEVENT

TPALLOC

Transcoder Resource Allocation Attempts.

Data Source

BSC_IOG20_APG40

Source Field

TPALLOC

Source Section

TRAPEVENT

TPAVTR

Available Transcoder Resources. Shows the number of idle and active transcoder resources in a transcoder pool.

Data Source

BSC_IOG20_APG40

Source Field

TPAVTR

Source Section

TRAPEVENT

TPCONG

Transcoder Resource Congestion.

Data Source

BSC_IOG20_APG40

Source Field

TPCONG

Source Section

TRAPEVENT

© Copyright IBM Corp. 2008, 2009. All Rights Reserved.

TPCTIME

Transcoder Resource Congestion Time.

Data Source

BSC_IOG20_APG40

Source Field

TPCTIME

Source Section

TRAPEVENT

TPIDLTR

Idle Transcoder Resources. Shows the number of idle transcoder resources in a transcoder pool.

Data Source

BSC_IOG20_APG40

Source Field

TPIDLTR

Source Section

TRAPEVENT

TPSYNCF

V.110 Synchronization Failure for pooled transcoder devices.

Data Source

BSC_IOG20_APG40

Source Field

TPSYNCF

Source Section

TRAPEVENT

TPTFOEST

Number of successful TFO establishment

Data Source

BSC_IOG20_APG40

Source Field

TPTFOEST

Source Section

TRAPEVENT

TPTFOESTATT

Number of TFO establishment attempts

Data Source

BSC_IOG20_APG40

Source Field

TPTFOESTATT

Source Section

TRAPEVENT

TrunkRoute Primitive Calculations

The following is a list of primitive calculations for the TrunkRoute entity.

AnswerSeizureRatio_Percentage

Answer Seizure Ratio Percentage

Calculation

```
nullValue(BANS,AGGR(MSC.MSCTrunkDest,BANSWCNT)) * 100.0 / null-
Value(NBIDS_TRAR,vsum(NCALLSI,NCALLSO))
```

BanswersIncomingRoute

Number of B-answers in the incoming route

Calculation

```
NANSWERSI * 100.0 / NCALLSI
```

BanswersOutgoingRoute

Number of B-answers in the outgoing route

© Copyright IBM Corp. 2008, 2009. All Rights Reserved.

Calculation

```
NANSWERSO * 100.0 / NCALLSO
```

Circuits_Available

Available Circuits on TrunkRoute

Calculation

```
vsum( NDEV_TRAR, -1.0 * (nullValue(BLKDDEVS,(NSCAN_TRUNKROUTE)) / 13.0 ))
```

Congestion%

Congested Call Attempts

Calculation

```
100 * ( UNSUC_BIDS / NBIDS_TRAR )
```

DIMENSION

Dimensioning Parameter

Calculation

```
WM_FCAST_DIMENSION(instance_id, TimeAndElement.tstamp)
```

GRAPHmultiLineSeparator

Special Control Field for Multi-Line Graphs

Calculation

```
""
```

GROWTH

The Growth in Erlangs per Week for Linear Regression

Calculation

```
WM_FCAST_GROWTH(instance_id) * 3600 * 24 * 7
```

INTERVALS

Number of 60 minute intervals covered

Calculation

```
PERLEN / (1.0 * 60)
```

INTERVALS_TRAR

Number of 60 minute intervals covered (from TRAR data)

Calculation

```
PERLEN_TRAR / (1.0 * 60)
```

NANSWERS_BW

Number of seizures that leads to a B-answer on the incoming and outgoing trunks

Calculation

```
vsum(NANSWERSI, NANSWERSO)
```

NCALLS_BW

Number of detected seizures by the incoming and outgoing trunks

Calculation

```
vsum(NCALLSI, NCALLSO)
```

NISUPATP_BW

Number of ATP received on incoming and outgoing routes

Calculation

```
vsum(NISUPATPI, NISUPATPO)
```

NOVERFLOW_BW

Number of congested call attempts on incoming and outgoing trunks

Calculation

```
vsum(NOVERFLOWI, NOVERFLOWO)
```

NRESTRICT_BW

Sum of Number of Incoming and Outgoing calls rejected due to the function restriction of accessible incoming and outgoing circuits

Calculation

```
vsum(NRESTRICTO, NRESTRICTI)
```

NSEMIPERC_BW

Number of semiperminant connection (Both Way)

Calculation

```
vsum(NSEMIPERCI, NSEMIPERCO)
```

NTRALACC_TRUNKROUTE_BW

Accumulated traffic level (Both Way)

© Copyright IBM Corp. 2008, 2009. All Rights Reserved.

Calculation

```
vsum(NTRALACCI_TRUNKROUTE, NTRALACCO_TRUNKROUTE)
```

NumberOfBAnswers

Number of B-answers

Calculation

```
nullValue(BANS,AGGR(MSC.MSCTrunkDest,BANSWCNT))
```

NumberOfBids

Number of bids

Calculation

```
nullValue(NBIDS_TRAR,vsum(NCALLSI,NCALLSO))
```

NUMDAYS

of days in Report

Calculation

```
DAYSINREPORT()
```

NUMHOURS

of hours in Summation Data

Calculation

PercentageCongestion

Percentage Congestion

Calculation

```
UNSUC_BIDS * 100.0 / NBIDS_TRAR
```

PercentAnswerSeizeRatio

% Answer Seize Ratio

Calculation

```
nullValue(BANS,AGGR(MSC.MSCTrunkDest,BANSWCNT)) * 100.0 / null-
Value(NBIDS_TRAR,vsum(NCALLSI,NCALLSO))
```

PercentSuccessCalls

Successful Calls Percentage

Calculation

```
100 * vsum(nullValue(NBIDS_TRAR,vsum(NCALLSI,NCALLSO)), -1.0 * null-
Value(UNSUC_BIDS,vsum(NOVERFLOWI,NOVERFLOWO))) / null-
Value(NBIDS_TRAR,vsum(NCALLSI,NCALLSO))
```

Sample_Size

The number of Samples in the Regression

Calculation

```
WM_FCAST_SAMPLES(instance_id)
```

TR_Correlation

Correlation co-efficient

Calculation

```
WM_FCAST_CORRELATION(instance_id)
```

TR_Critical_Carried

TG Critical Traffic based on Carried Traffic

Calculation

```
capacityB( (int) Circuits_Available, TR_GOS )
```

TR_Critical_Offerred

Route Critical Traffic based on Offered Traffic

Calculation

```
TR_Critical_Carried / ( 1.0 - TR_GOS )
```

TR_Current_Util%

Current Utilization%

Calculation

```
100 * (DIMENSION / TR_Critical_Offerred)
```

TR_Est_GOS

Calculated Theoretical Grade of Service

Calculation

```
gos( (int) Circuits_Available, offTraffic( (int) Circuits_Available, 1.0 *
TR_Traffic ))
```

© Copyright IBM Corp. 2008, 2009. All Rights Reserved.

TR_Est_Lost

Calculated Theoretical Lost Traffic

Calculation

```
vsum( TR_Traffic_Off, -1.0 * TR_Traffic )
```

TR_Exhaust_Date

Circuits Exhaustion Date based on Critical Traffic

Calculation

```
dateToString(stringToDate(TimeAndElement.tstamp, "%Y-%m-%d") +
(int)(vsum(TR_Critical_Carried, -1.0 * DIMENSION) /
(WM_FCAST_GROWTH(instance_id) * 3600 * 24)), "%Y-%m-%d")
```

TR_Exhaust_Days

Number of Days until Circuits Exhausts, based on Critical Traffic

Calculation

```
vsum((int) vsum(TR_Critical_Carried, -1.0 * DIMENSION) /
(WM_FCAST_GROWTH(instance_id) * 3600 * 24), -7)
```

TR_ExtraCirct_Req

Extra Circuits Required in Route at the End of Forecast Period

Calculation

```
vsum( TR_N3Days_FCAST, -1.0 * NDEV_TRAR )
```

TR_Final_Util%

The forecast utilization at the end of the forecast period.

Calculation

```
100 * ( TR_Forecast_Value3 / TR_Critical_Offerred )
```

TR_Forecast_Value1

Forecasted Value at N1 days ahead

Calculation

```
vsum(WM_FCAST_DIMENSION(instance_id, TimeAndElement.tstamp), GROWTH / 7 *
WM_FCAST_DAYS(1))
```

TR_Forecast_Value2

Forecasted Value at N2 days ahead

Calculation

```
vsum(WM_FCAST_DIMENSION(instance_id, TimeAndElement.tstamp), GROWTH / 7 *
WM_FCAST_DAYS(2))
```

TR_Forecast_Value3

Forecasted Value at N3 days ahead

Calculation

```
vsum(WM_FCAST_DIMENSION(instance_id, TimeAndElement.tstamp), GROWTH / 7 *
WM_FCAST_DAYS(3))
```

TR_GOS

Dimensioned Grade of Service for TrunkRoute

Calculation

TR_N1Days_FCAST

Forecast Circuits in N1 days time

Calculation

```
circuits(TR_GOS, TR_Forecast_Value1)
```

TR_N2Days_FCAST

Forecast Circuits in N2 days time

Calculation

```
circuits(TR_GOS, TR_Forecast_Value2)
```

TR_N3Days_FCAST

Forecast Circuits in N3 days time

Calculation

```
circuits(TR_GOS, TR_Forecast_Value3)
```

TR_PABH3

Profile Average Busy Hour for 3 highest values

Calculation

```
WM_FCAST_PABH(instance_id, TimeAndElement.tstamp, 3)
```

© Copyright IBM Corp. 2008, 2009. All Rights Reserved.

TR_PABH5

Profile Average Busy Hour for 5 highest values

Calculation

```
WM_FCAST_PABH(instance_id, TimeAndElement.tstamp, 5)
```

TR_Req_Ch

No of Circuits Required to carry the traffic given by Dimensioning parameter

Calculation

```
circuits(TR_GOS, DIMENSION)
```

TR_Traffic

Carried Traffic in Erlangs (BOTHWAY)

Calculation

```
nullValue(SUMTRAFLVL, vsum(NTRALACCI_TRUNKROUTE, NTRALACCO_TRUNKROUTE)) /
(1.0 * nullValue(ACCTRAFCNTR, NSCAN_TRUNKROUTE))
```

TR_Traffic_Off

Calculated Theoretical Offered Traffic

Calculation

```
offTraffic( (int) NDEV_TRAR, 1.0 * TR_Traffic )
```

TR_Traffic_OneWay

Carried Traffic in Erlangs

Calculation

```
nullValue(SUMTRAFLVL, vsum(NTRALACCI_TRUNKROUTE, NTRALACCO_TRUNKROUTE)) /
(1.0 * nullValue(ACCTRAFCNTR, NSCAN_TRUNKROUTE))
```

TR_Util_Offered

TCH %Utilization based on Offered Traffic

Calculation

```
100 * (TR_Traffic_Off / (1.0 * TR_Critical_Offerred ))
```

Traffic

Calculation

```
nullValue(SUMTRAFLVL,vsum(NTRALACCI_TRUNKROUTE,NTRALACCO_TRUNKROUTE)) /
(1.0 * nullValue(MSC.ACCTRAFCNTR,NSCAN_TRUNKROUTE))
```

TrafficBW

Traffic on Route (Erlangs)

Calculation

```
(NTRALACCI_TRUNKROUTE + NTRALACCO_TRUNKROUTE) / (1.0 * NSCAN_TRUNKROUTE)
```

TrafficInc

Trunk traffic incoming route (E)

Calculation

```
NTRALACCI_TRUNKROUTE / (1.0 * NSCAN_TRUNKROUTE)
```

TrafficOut

Trunk traffic outgoing route (E)

Calculation

```
NTRALACCO_TRUNKROUTE / (1.0 * NSCAN_TRUNKROUTE)
```

TRAL_TRUNKROUTE_BW

Indicator of the number of seized individuals by incoming and outgoing routes.

Calculation

```
vsum(TRALI_TRUNKROUTE, TRALO_TRUNKROUTE)
```

TrunkCallAttempts

Total trunk call attempts

Calculation

```
vsum(NCALLSI, NCALLSO)
```

VENDORTECH

Vendor Technology

Calculation

```
isNull( PERLEN ) ? nullString() : "EricssonGSM"
```

© Copyright IBM Corp. 2008, 2009. All Rights Reserved.

TrunkRoute Peg Counts

The following is a list of peg counts for the TrunkRoute entity.

ACCTRAFCNTR

Number of accumulations of the traffic level counter

Data Source

MSC_TRAR

Source Field

ACCTRAFCNTR

Source Section

ASC_TRAR

BANS

Number of B-answers

Data Source

MSC_TRAR

Source Field

BANS

Source Section

ASC_TRAR

BBLOL

Number of Type B-Blocked Devices

Data Source

MSC_IOG20_APG40

Source Field

BBLOL

Source Section

TRUNKROUTE

Updated: 2009-07-22

BLKDDEVS

Sum of blocked devices

Data Source

MSC_TRAR

Source Field

BLKDDEVS

Source Section

ASC_TRAR

BLOL_TRUNKROUTE

blocked individuals in the route Individuals in state BLOC, LIBL or SEAL; BLOL=MBLOL+ABLOL+OBLOL

Data Source

MSC_IOG20_APG40

Source Field

BLOL

Source Section

TRUNKROUTE

ID1_TRUNKROUTE

Global route number (I)

Data Source

MSC_IOG20_APG40

Source Field

ID1

Source Section

TRUNKROUTE

© Copyright IBM Corp. 2008, 2009. All Rights Reserved.

ID2_TRUNKROUTE

Global route number (O)

Data Source

MSC_IOG20_APG40

Source Field

ID2

Source Section

TRUNKROUTE

LASTCONGCNT

Number of congestions on the last available route, outgoing route

Data Source

MSC_IOG20_APG40

Source Field

LASTCONGCNT

Source Section

TRUNKROUTE

MSC_RELEASE

Release

NANSWERSI

Number of seizures that leads to a B-answer on the incoming route

Data Source

MSC_IOG20_APG40

Source Field

NANSWERSI

Source Section

TRUNKROUTE

NANSWERSO

Number of seizures that leads to a B-answer on the outgoing route

Data Source

MSC_IOG20_APG40

Source Field

NANSWERSO

Source Section

TRUNKROUTE

NBBLOCACC

Accumulated number of type B-blocked devices

Data Source

MSC_IOG20_APG40

Source Field

NBBLOCACC

Source Section

TRUNKROUTE

NBIDS_TRAR

Number of bids

Data Source

MSC_TRAR

Source Field

NBIDS

Source Section

ASC_TRAR

NBLOCACC_TRUNKROUTE

Accumulated number of blocked devices

© Copyright IBM Corp. 2008, 2009. All Rights Reserved.

Data Source

MSC_IOG20_APG40

Source Field

NBLOCACC

Source Section

TRUNKROUTE

NC7DSEIZ

Number of simultaneous calls

Data Source

MSC_IOG20_APG40

Source Field

NC7DSEIZ

Source Section

TRUNKROUTE

NCALLSI

Number of detected seizures by the incoming route

Data Source

MSC_IOG20_APG40

Source Field

NCALLSI

Source Section

TRUNKROUTE

NCALLSO

Number of seizure attempts by the outgoing route

Data Source

MSC_IOG20_APG40

Source Field

NCALLSO

Source Section

TRUNKROUTE

NCONGBAS

Number of congestions due to no resources available in Bearer Access

Data Source

MSC_IOG20_APG40

Source Field

NCONGBAS

Source Section

TRUNKROUT2

NCONGTRANS

Nr of congestions due to no transmission resources available in Bearer Access

Data Source

MSC_IOG20_APG40

Source Field

NCONGTRANS

Source Section

TRUNKROUT2

NDEV_TRAR

Number of devices

Data Source

MSC_TRAR

Source Field

NDEV

© Copyright IBM Corp. 2008, 2009. All Rights Reserved.

Source Section

ASC_TRAR

NDEV_TRUNKROUTE

Number of individuals in service on the route

Data Source

MSC_IOG20_APG40

Source Field

NDEV

Source Section

TRUNKROUTE

NDSEIZ

Number of simultaneous seizures of devices on bothway route

Data Source

MSC_IOG20_APG40

Source Field

NDSEIZ

Source Section

TRUNKROUTE

NISUPATPI

Number of ATP received (incoming route and affiliated outgoing route)

Data Source

MSC_IOG20_APG40

Source Field

NISUPATPI

Source Section

TRUNKROUTE

NISUPATPO

Number of ATP received (outgoing route and affiliated incoming route)

Data Source

MSC_IOG20_APG40

Source Field

NISUPATPO

Source Section

TRUNKROUTE

NOSEIZ_TRUNKROUTE

Number of outgoing seizures

Data Source

MSC_IOG20_APG40

Source Field

NOSEIZ

Source Section

TRUNKROUTE

NOVERFLOWI

Number of calls with congestion (incoming route)

Data Source

MSC_IOG20_APG40

Source Field

NOVERFLOWI

Source Section

TRUNKROUTE

NOVERFLOWO

Number of congested call attempts

© Copyright IBM Corp. 2008, 2009. All Rights Reserved.

Data Source

MSC_IOG20_APG40

Source Field

NOVERFLOWO

Source Section

TRUNKROUTE

NRESTRICTI

Number of incoming calls rejected

Data Source

MSC_IOG20_APG40

Source Field

NRESTRICTI

Source Section

TRUNKROUTE

NRESTRICTO

outgoing calls rejected for the route due to the function Restriction of accessible outgoing circuits

Data Source

MSC_IOG20_APG40

Source Field

NRESTRICTO

Source Section

TRUNKROUTE

NSCAN_TRUNKROUTE

Number of accumulations (scannings)

Data Source

MSC_IOG20_APG40

Source Field

NSCAN

Source Section

TRUNKROUTE

NSEMIPERCI

Number of semiperminant connection (incoming)

Data Source

MSC_IOG20_APG40

Source Field

NSEMIPERCI

Source Section

TRUNKROUTE

NSEMIPERCO

Number of semiperminant connection (outgoing)

Data Source

MSC_IOG20_APG40

Source Field

NSEMIPERCO

Source Section

TRUNKROUTE

NTRALACCI_TRUNKROUTE

Accumulated traffic level (incoming route)

Data Source

MSC_IOG20_APG40

© Copyright IBM Corp. 2008, 2009. All Rights Reserved.

Source Field

NTRALACCI

Source Section

TRUNKROUTE

NTRALACCO_TRUNKROUTE

Accumulated traffic level (outgoing route)

Data Source

MSC_IOG20_APG40

Source Field

NTRALACCO

Source Section

TRUNKROUTE

PERLEN

Period Length

PERLEN_TRAR

Period Length (of TRAR data)

RESTRDEVCNT

Number of restricted devices (outgoing route)

Data Source

MSC_IOG20_APG40

Source Field

RESTRDEVCNT

Source Section

TRUNKROUTE

SUMTRAFLVL

Accumulated value of the number of seized devices

Data Source

MSC_TRAR

Source Field

SUMTRAFLVL

Source Section

ASC_TRAR

THROUGHRTECNT

Number of through connections to an idle B-subscriber on a route basis, outgoing route

Data Source

MSC_IOG20_APG40

Source Field

THROUGHRTECNT

Source Section

TRUNKROUTE

TRALI_TRUNKROUTE

Indicates at each moment the number of seized individuals by the incoming route.

Data Source

MSC_IOG20_APG40

Source Field

TRALI

Source Section

TRUNKROUTE

TRALO_TRUNKROUTE

Indicates at each moment the number of seized individuals by the outgoing route.

Data Source

MSC_IOG20_APG40

© Copyright IBM Corp. 2008, 2009. All Rights Reserved.

Source Field

TRALO

Source Section

TRUNKROUTE

TRK_TYPE

Trunk Type

Data Source

MSC_IOG20_APG40

Source Field

TRK

UNSUC_BIDS

Number of unsuccessful bids

Data Source

MSC_TRAR

Source Field

UNSUC

Source Section

ASC_TRAR

VLR Primitive Calculations

The following is a list of primitive calculations for the VLR entity.

GRAPHmultiLineSeparator

Special Control Field for Multi-Line Graphs

Calculation

""

INTERVALS

Number of 60 minute intervals covered

Calculation

```
PERLEN / (1.0 * 60)
```

NUMDAYS

of days in Report

Calculation

```
DAYSINREPORT()
```

NUMHOURS

of hours in Summation Data

Calculation

VENDORTECH

Vendor Technology

Calculation

```
isNull( PERLEN ) ? nullString() : "EricssonGSM"
```

VLR Peg Counts

The following is a list of peg counts for the VLR entity.

MSC_RELEASE

Release

NACTIVSS

Number of Activate SS messages per subscriber during busy hour

Data Source

MSC_IOG20_APG40

Source Field

NACTIVSS

Source Section

VLR

© Copyright IBM Corp. 2008, 2009. All Rights Reserved.

NACTTRAC

Number of operations 'Activate Trace Mode' sent to the VLR

Data Source

MSC_IOG20_APG40

Source Field

NACTTRAC

Source Section

VLR

NBEGACT

Counter for number of "Begin Subscriber Activity" per VLR received

Data Source

MSC_IOG20_APG40

Source Field

NBEGACT

Source Section

VLR

NCANCEL

requests of a MAP operation "Cancel Location" sent to MSC/VLR counted per VLR.Stepped up when a request to perform the operation is sent to MSC/VLR

Data Source

MSC_IOG20_APG40

Source Field

NCANCEL

Source Section

VLR

NDEACTRA

Number of operations 'Dectivate Trace Mode' sent to the VLR

Data Source

MSC_IOG20_APG40

Source Field

NDEACTRA

Source Section

VLR

NDEACTSS

Number of Deactivate SS from VLR messages per subscriber during the busy hour

Data Source

MSC_IOG20_APG40

Source Field

NDEACTSS

Source Section

VLR

NDELETE

Number of Delete Subscriber Data operations sent per VLR

Data Source

MSC_IOG20_APG40

Source Field

NDELETE

Source Section

VLR

NERASESS

Number of Erasure requests received per VLR

© Copyright IBM Corp. 2008, 2009. All Rights Reserved.

Data Source

MSC_IOG20_APG40

Source Field

NERASESS

Source Section

VLR

NINSERT

Number of Insert Subscriber Data operations sent per VLR

Data Source

MSC_IOG20_APG40

Source Field

NINSERT

Source Section

VLR

NINTRRSS

Number of interrogation of SS per VLR

Data Source

MSC_IOG20_APG40

Source Field

NINTRRSS

Source Section

VLR

NPROROA

requests of a MAP operation "ProvideRoamingNumber" per VLR Stepped up when the operation is invoked

Data Source

MSC_IOG20_APG40

Source Field

NPROROA

Source Section

VLR

NPRSINFO

Number of requests of the MAP operation "Provide Subscriber Info" per VLR

Data Source

MSC_IOG20_APG40

Source Field

NPRSINFO

Source Section

VLR

NPURGEMS

Total number of Purge MS messages received from certain VLR

Data Source

MSC_IOG20_APG40

Source Field

NPURGEMS

Source Section

VLR

NPUSSDAR

Number of PROC UNSTR SS-DATA OPER REC

Data Source

MSC_IOG20_APG40

© Copyright IBM Corp. 2008, 2009. All Rights Reserved.

Source Field

NPUSSDAR

Source Section

VLR

NPUSSRQR

Number of PROC UNSTR SS-REQ OPER REC

Data Source

MSC_IOG20_APG40

Source Field

NPUSSRQR

Source Section

VLR

NREGPASS

Number of Register Password messages from VLR per subscriber during busy hour

Data Source

MSC_IOG20_APG40

Source Field

NREGPASS

Source Section

VLR

NREGTRSS

Number of Registration requests received per VLR

Data Source

MSC_IOG20_APG40

Source Field

NREGTRSS

Source Section

VLR

NUPDLOC

Requests of Location Updating operations sent to MSC/VLR counted per VLR

Data Source

MSC_IOG20_APG40

Source Field

NUPDLOC

Source Section

VLR

NUSSDNTS

Number of NOF UNSTR SS-NOTIFY OPER SENT

Data Source

MSC_IOG20_APG40

Source Field

NUSSDNTS

Source Section

VLR

NUSSDRQS

Number of UNSTR SS-REQ OPER SENT

Data Source

MSC_IOG20_APG40

Source Field

NUSSDRQS

Source Section

VLR

© Copyright IBM Corp. 2008, 2009. All Rights Reserved.

NVLRSAVTOT

Number of received authentication vectors from VLR

Data Source

MSC_IOG20_APG40

Source Field

NVLRSAVTOT

Source Section

COPRVLRST

NVLRSCSDTOT

Number of received current security context data from VLR

Data Source

MSC_IOG20_APG40

Source Field

NVLRSCSDTOT

Source Section

COPRVLRST

NVLRSECDSUCC

Number of successful requests for security data from VLR

Data Source

MSC_IOG20_APG40

Source Field

NVLRSECDSUCC

Source Section

COPRVLRST

NVLRSECDTOT

Number of total requests for security data from VLR

Data Source

MSC_IOG20_APG40

Source Field

NVLRSECDTOT

Source Section

COPRVLRST

PERLEN

Period Length

© Copyright IBM Corp. 2008, 2009. All Rights Reserved.

13 OSSRC Traffic Entities

The following figures show the Prospect reporting hierarchy for OSSRC traffic entities.

Figure 8: Reporting Hierarchy

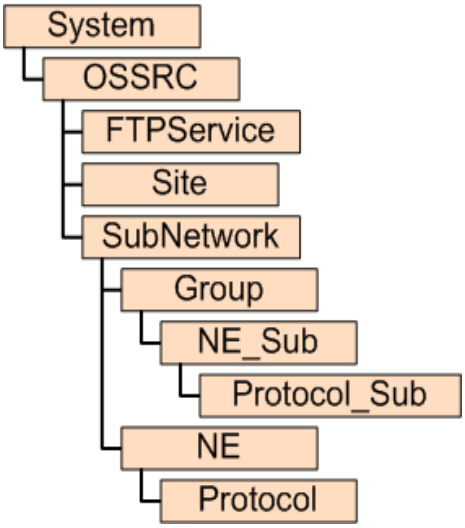

© Copyright IBM Corp. 2008, 2009. All Rights Reserved.

14 OSSRC Traffic Fields

The following is a list of available OSSRC Traffic performance data fields.

FTPService Primitive Calculations

The following is a list of primitive calculations for the FTPService entity.

GRAPHmultiLineSeparator

Special Control Field for Multi-Line Graphs

Calculation

```
""
```

NUMDAYS

of days in Report

Calculation

```
DAYSINREPORT()
```

NUMHOURS

of hours in Summation Data

Calculation

FTPService Peg Counts

The following is a list of peg counts for the FTPService entity.

controlPortId

The controlPortId is the control number used by TCP/UDP for the FTP service.

Data Source

OSSRC

Source Field

controlPortId

Source Section

FTPService

dataPortId

The dataPortId is the port number used by TCP/UDP for the FTP service.

Data Source

OSSRC

Source Field

dataPortId

Source Section

FTPService

directoryPath

This is the directory path on the FTP Server where files are stored.

Data Source

OSSRC

Source Field

directoryPath

Source Section

FTPService

hostname

This is the hostname of the server on which the FTP service resides.

Data Source

OSSRC

Source Field

hostname

Source Section

FTPService

ipAddress

This is the IP address of the server on which the FTP service resides.

Data Source

OSSRC

Source Field

ipAddress

Source Section

FTPService

name

Unique name of the FTP Service.

Data Source

OSSRC

Source Field

name

Source Section

FTPService

serviceSecurityState

Indicates whether or not a secure protocol should be used to connect to the this service.

Data Source

OSSRC

Source Field

serviceSecurityState

Source Section

FTPService

System

Same or close to Hostname

Data Source

OSSRC

Source Field

System

Source Section

FTPService

type

This attributes defines if the ftpService is to be used for software upload, download or the download of license keys. Permitted values are BackupStore, SwStore and LicenseKeyStore.

Data Source

OSSRC

Source Field

type

Source Section

FTPService

Group Primitive Calculations

The following is a list of primitive calculations for the Group entity.

GRAPHmultiLineSeparator

Special Control Field for Multi-Line Graphs

Calculation

""

Updated: 2009-07-22

NUMDAYS

of days in Report

Calculation

```
DAYSINREPORT()
```

NUMHOURS

of hours in Summation Data

Calculation

Group Peg Counts

The following is a list of peg counts for the Group entity.

exists_optional

Optional attribute. Not used by ARNE. The actual name of the counter is exists which is protected word in Oracle.

groupType

The following predefined Group types are supported: MSCinPool , SGSNinPool and RBSGroup.

userLabel

Unique identifier for the group.

NE Primitive Calculations

The following is a list of primitive calculations for the NE entity.

GRAPHmultiLineSeparator

Special Control Field for Multi-Line Graphs

Calculation

```
""
```

NUMDAYS

of days in Report

Calculation

```
DAYSINREPORT()
```

NUMHOURS

of hours in Summation Data

Calculation

NE Peg Counts

The following is a list of peg counts for the NE entity.

associatedNodes

Network Elements can be associated with other Network Elements. In the network if there are logical associations between Network Elements the topology view should reflect these logical associations.

Data Source

OSSRC

Source Field

associatedNodes

Source Section

ElementManagement

associatedSite

Specifies the Site Network Object to be associated.

Data Source

OSSRC

Source Field

associatedSite

Source Section

ElementManagement

AssociationType

The type of association requested. BSC_to_MSC, BSC_to_TRC, BSC_to_ExtMSC, MSC_to_ExtBSC, SMPC_to_BSC, SMPC_to_GMPC, SGSN_to_GGSN, MSC_to_MGW, MSCServer_to_MGW, DNSServer_to_IPWorks, MGW_to_RNC, MGW_to_BSC, ExtBSC_to_ExtMSC, BSC_to_LANSwitch, SGSN_to_ExtBS

Data Source

OSSRC

Source Field

AssociationType

Source Section

Relationship

boardId

New element contained under ManagedElement. This is included for forward compatibility and is not supported in R3. The value will not be stored in the topology model and therefore will not be used.

Data Source

OSSRC

Source Field

boardId

Source Section

Connectivity

bookname

bookname

Data Source

OSSRC

Source Field

bookname

Source Section

Connectivity

browser

browser

Data Source

OSSRC

Source Field

browser

Source Section

Connectivity

browserURL

browserURL

Data Source

OSSRC

Source Field

browserURL

Source Section

Connectivity

connectionStatus

This attribute will be set to FALSE if connection to the Network Element or link is NOT present.

Data Source

OSSRC

Source Field

connectionStatus

Source Section

ElementManagement

emUrl

The URL to launch the Element Manager for this Network Element.

Data Source

OSSRC

Source Field

emUrl

Source Section

Connectivity

FROM_FDN

The Network Object to be associated from.

Data Source

OSSRC

Source Field

FROM_FDN

Source Section

Connectivity

ftpBackupStore

A reference to a ftpService that can be used for storing backups for the NE. This field is not mandatory and is modifiable.

Data Source

OSSRC

Source Field

ftpBackupStore

Source Section

Connectivity

ftpLicenseKeyStore

A reference to a ftpService that can be used for License Key installation on the NE. This field is not mandatory and is modifiable.

Data Source

OSSRC

Source Field

ftpLicenseKeyStore

Source Section

Connectivity

ftpSwStore

A reference to a ftpService that can be used for SW installation of the NE.

Data Source

OSSRC

Source Field

ftpSwStore

Source Section

Connectivity

hostname

This is the hostname of the Network Element. This field is not mandatory and is modifiable.

Data Source

OSSRC

Source Field

hostname

Source Section

Connectivity

ipAddress

This is the IP address of the Network Element.ip_v4 attribute

Data Source

OSSRC

Source Field

ipAddress

Source Section

Connectivity

isManaged

Select TRUE if the Network Element is managed by the OSS. Select False if the Network Element is to be displayed in the topology but not to be managed by the OSS.

Data Source

OSSRC

Source Field

isManaged

Source Section

ElementManagement

IubInfoRbsId

This information is used when creating the IUB link.

Data Source

OSSRC

Source Field

IubInfoRbsId

Source Section

ElementManagement

IubInfoRncModuleId

This information is used to create the IUB link.

Data Source

OSSRC

Source Field

IubInfoRncModuleId

Source Section

ElementManagement

ManagedElementId

This is used to give the Network Element a unique, unchangeable identity.

Data Source

OSSRC

managedElementType

The extra functions available depend on the Network Element type.

Data Source

OSSRC

Source Field

managedElementType

Source Section

ElementManagement

ManagedServiceAvailability

This provides an extra level of granularity needed for managed elements to define administration state from the OSS point of view.0: Not Managed. 1: Fully Managed, 20: Fault Management and EAM supported.

Data Source

OSSRC

Source Field

ManagedServiceAvailability

Source Section

ElementManagement

namingPort

This is the naming port of the Name Service on the Network Element itself (if a Name Service exists).

Data Source

OSSRC

Source Field

namingPort

Source Section

Protocol

namingUrl

The URL of the Naming Service (if applicable). In the Cello case this is the URL to the .ior file, which can then be used to connect to the CS on the Network Element.

Data Source

OSSRC

Source Field

namingUrl

Source Section

Protocol

NeadAttach

This fields is relevant only for a UTRAN based NetworkElement.

Data Source

OSSRC

Source Field

NeadAttach

Source Section

ElementManagement

neMIMVersion

The version of the MIM Schema. This field is only relevant for WRAN Network Elements

Data Source

OSSRC

Source Field

neMIMVersion

Source Section

ElementManagement

nodeSecurityState

The security state is on by default. Either ON or OFF.

Data Source

OSSRC

Source Field

nodeSecurityState

Source Section

Connectivity

nodeVersion

This is the release version of the NE itself, not the version of the MIM Schema.

Data Source

OSSRC

Source Field

nodeVersion

Source Section

ElementManagement

platformVersion

Only platform versions specified in the Supported NEs doc are permitted.

Data Source

OSSRC

Source Field

platformVersion

Source Section

ElementManagement

primaryType

This determines the primary function of the Network Element.

Data Source

OSSRC

Source Field

primaryType

Source Section

ElementManagement

RbsInfo_rbsType

This fields is only relevant for RBS NEs.

Data Source

OSSRC

Source Field

RbsInfo_rbsType

Source Section

ElementManagement

RbsTnInfoAtmPort

The name of the ATM port.

Data Source

OSSRC

Source Field

RbsTnInfoAtmPort

Source Section

ElementManagement

RbsTnInfoExternalVPI

A valid entry is a number between 1 and 255.

Data Source

OSSRC

Source Field

RbsTnInfoExternalVPI

Source Section

ElementManagement

sourceType

The Platform field is filled in automatically when the Network Element type is selected.

Data Source

OSSRC

Source Field

sourceType

Source Section

ElementManagement

swVersion

This is the version of the Vendor Specific Extensions to this Managed Object Class (not the version of the Managed Element. This allows an NMS system to operate with different vendor specific extensions to the standard model.

Data Source

OSSRC

Source Field

swVersion

Source Section

ElementManagement

TO_FDN

The Network Object to be associated to.Examples BSC_to_MSC, BSC_to_TRC, BSC_to_ExtMSC, MSC_to_ExtBSC, SMPC_to_BSC, SMPC_to_GMPC, SGSN_to_GGSN, MSC_to_MGW, MSCServer_to_MGW, DNSServer_to_IPWorks, MGW_to_RNC, MGW_to_BSC , ExtBSC_to_ExtMSC, BSC_to_LANSwitch, SGSN_to_ExtBSC

Data Source

OSSRC

Source Field

TO_FDN

Source Section

Relationship

userDefinedState

Value mapped to the ONRM ManagedElement attribute: userDefinedState

Data Source

OSSRC

Source Field

userDefinedState

Source Section

ElementManagement

vendorName

The name of the equipment vendor.

Data Source

OSSRC

Source Field

vendorName

Source Section

ElementManagement

version

This determines the release version of the Network Element.

Data Source

OSSRC

Source Field

version

Source Section

ElementManagement

NE_Sub Primitive Calculations

The following is a list of primitive calculations for the NE_Sub entity.

GRAPHmultiLineSeparator

Special Control Field for Multi-Line Graphs

Calculation

""

NUMDAYS

of days in Report

Calculation

```
DAYSINREPORT()
```

NUMHOURS

of hours in Summation Data

Calculation

NE_Sub Peg Counts

The following is a list of peg counts for the NE_Sub entity.

associatedNodes

Network Elements can be associated with other Network Elements. In the network if there are logical associations between Network Elements the topology view should reflect these logical associations.

Data Source

OSSRC

Source Field

associatedNodes

Source Section

ElementManagement

associatedSite

Specifies the Site Network Object to be associated.

Data Source

OSSRC

Source Field

associatedSite

Source Section

ElementManagement

AssociationType

The type of association requested. BSC_to_MSC, BSC_to_TRC, BSC_to_ExtMSC, MSC_to_ExtBSC, SMPC_to_BSC, SMPC_to_GMPC, SGSN_to_GGSN, MSC_to_MGW, MSCServer_to_MGW, DNSServer_to_IPWorks, MGW_to_RNC, MGW_to_BSC, ExtBSC_to_ExtMSC, BSC_to_LANSwitch, SGSN_to_ExtBS

Data Source

OSSRC

Source Field

AssociationType

Source Section

Relationship

boardId

New element contained under ManagedElement. This is included for forward compatibility and is not supported in R3. The value will not be stored in the topology model and therefore will not be used.

Data Source

OSSRC

Source Field

boardId

Source Section

Router

bookname

bookname

Data Source

OSSRC

Source Field

bookname

Source Section

Router

browser

browser

Data Source

OSSRC

Source Field

browser

Source Section

Router

browserURL

browserURL

Data Source

OSSRC

Source Field

browserURL

Source Section

Router

connectionStatus

This attribute will be set to FALSE if connection to the Network Element or link is NOT present.

Data Source

OSSRC

Source Field

connectionStatus

Source Section

ElementManagement

emUrl

The URL to launch the Element Manager for this Network Element.

Data Source

OSSRC

Source Field

emUrl

Source Section

Router

FROM_FDN

The Network Object to be associated from.

Data Source

OSSRC

Source Field

FROM_FDN

Source Section

Router

ftpBackupStore

A reference to a ftpService that can be used for storing backups for the NE. This field is not mandatory and is modifiable.

Data Source

OSSRC

Source Field

ftpBackupStore

Source Section

Router

ftpLicenseKeyStore

A reference to a ftpService that can be used for License Key installation on the NE. This field is not mandatory and is modifiable.

Data Source

OSSRC

Source Field

ftpLicenseKeyStore

Source Section

Router

ftpSwStore

A reference to a ftpService that can be used for SW installation of the NE.

Data Source

OSSRC

Source Field

ftpSwStore

Source Section

Router

hostname

This is the hostname of the Network Element. This field is not mandatory and is modifiable.

Data Source

OSSRC

Source Field

hostname

Source Section

Router

ipAddress

This is the IP address of the Network Element.ip_v4 attribute

Data Source

OSSRC

Source Field

ipAddress

Source Section

Router

isManaged

Select TRUE if the Network Element is managed by the OSS. Select False if the Network Element is to be displayed in the topology but not to be managed by the OSS.

Data Source

OSSRC

Source Field

isManaged

Source Section

ElementManagement

IubInfoRbsId

This information is used when creating the IUB link.

Data Source

OSSRC

Source Field

IubInfoRbsId

Source Section

ElementManagement

IubInfoRncModuleId

This information is used to create the IUB link.

Data Source

OSSRC

Source Field

IubInfoRncModuleId

Source Section

ElementManagement

ManagedElementId

This is used to give the Network Element a unique, unchangeable identity.

Data Source

OSSRC

managedElementType

The extra functions available depend on the Network Element type.

Data Source

OSSRC

Source Field

managedElementType

Source Section

ElementManagement

ManagedServiceAvailability

This provides an extra level of granularity needed for managed elements to define administration state from the OSS point of view.0: Not Managed. 1: Fully Managed, 20: Fault Management and EAM supported.

Data Source

OSSRC

Source Field

ManagedServiceAvailability

Source Section

ElementManagement

namingPort

This is the naming port of the Name Service on the Network Element itself (if a Name Service exists).

Data Source

OSSRC

Source Field

namingPort

Source Section

Protocol

namingUrl

The URL of the Naming Service (if applicable). In the Cello case this is the URL to the .ior file, which can then be used to connect to the CS on the Network Element.

Data Source

OSSRC

Source Field

namingUrl

Source Section

Protocol

NeadAttach

This fields is relevant only for a UTRAN based NetworkElement.

Data Source

OSSRC

Source Field

NeadAttach

Source Section

ElementManagement

neMIMVersion

The version of the MIM Schema. This field is only relevant for WRAN Network Elements

Data Source

OSSRC

Source Field

neMIMVersion

Source Section

ElementManagement

nodeSecurityState

The security state is on by default. Either ON or OFF.

Data Source

OSSRC

Source Field

nodeSecurityState

Source Section

Router

nodeVersion

This is the release version of the NE itself, not the version of the MIM Schema.

Data Source

OSSRC

Source Field

nodeVersion

Source Section

ElementManagement

platformVersion

Only platform versions specified in the Supported NEs doc are permitted.

Data Source

OSSRC

Source Field

platformVersion

Source Section

ElementManagement

primaryType

This determines the primary function of the Network Element.

Data Source

OSSRC

Source Field

primaryType

Source Section

ElementManagement

RbsInfo_rbsType

This fields is only relevant for RBS NEs.

Data Source

OSSRC

Source Field

RbsInfo_rbsType

Source Section

ElementManagement

RbsTnInfoAtmPort

The name of the ATM port.

Data Source

OSSRC

Source Field

RbsTnInfoAtmPort

Source Section

ElementManagement

RbsTnInfoExternalVPI

A valid entry is a number between 1 and 255.

Data Source

OSSRC

Source Field

RbsTnInfoExternalVPI

Source Section

ElementManagement

sourceType

The Platform field is filled in automatically when the Network Element type is selected.

Data Source

OSSRC

Source Field

sourceType

Source Section

ElementManagement

swVersion

This is the version of the Vendor Specific Extensions to this Managed Object Class (not the version of the Managed Element. This allows an NMS system to operate with different vendor specific extensions to the standard model.

Data Source

OSSRC

Source Field

swVersion

Source Section

ElementManagement

TO_FDN

The Network Object to be associated to.Examples BSC_to_MSC, BSC_to_TRC, BSC_to_ExtMSC, MSC_to_ExtBSC, SMPC_to_BSC, SMPC_to_GMPC, SGSN_to_GGSN, MSC_to_MGW, MSCServer_to_MGW, DNSServer_to_IPWorks, MGW_to_RNC, MGW_to_BSC , ExtBSC_to_ExtMSC, BSC_to_LANSwitch, SGSN_to_ExtBSC

Data Source

OSSRC

Source Field

TO_FDN

Source Section

Relationship

userDefinedState

Value mapped to the ONRM ManagedElement attribute: userDefinedState

Data Source

OSSRC

Source Field

userDefinedState

© Copyright IBM Corp. 2008, 2009. All Rights Reserved.

Source Section

ElementManagement

vendorName

The name of the equipment vendor.

Data Source

OSSRC

Source Field

vendorName

Source Section

ElementManagement

version

This determines the release version of the Network Element.

Data Source

OSSRC

Source Field

version

Source Section

ElementManagement

OSSRC Primitive Calculations

The following is a list of primitive calculations for the OSSRC entity.

GRAPHmultiLineSeparator

Special Control Field for Multi-Line Graphs

Calculation

""

NUMDAYS

of days in Report

Calculation

```
DAYSINREPORT()
```

NUMHOURS

of hours in Summation Data

Calculation

OSSRC Peg Counts

The following is a list of peg counts for the OSSRC entity.

importVersion

Close to ARNE DTD Version

System_OSSRC

ARNE Directory Structure DTD file.

Source Field

SYSTEM

version

version

Protocol Primitive Calculations

The following is a list of primitive calculations for the Protocol entity.

GRAPHmultiLineSeparator

Special Control Field for Multi-Line Graphs

Calculation

```
""
```

NUMDAYS

of days in Report

Calculation

```
DAYSINREPORT()
```

© Copyright IBM Corp. 2008, 2009. All Rights Reserved.

NUMHOURS

of hours in Summation Data

Calculation

Protocol Peg Counts

The following is a list of peg counts for the Protocol entity.

alarmIRPAgentVersion

This is the version of the 3GPP alarms that the Network Element agent complies to. This field is valid only for Cello Network Elements. This field is not mandatory and is modifiable.

Data Source

OSSRC

Source Field

alarmIRPAgentVersion

Source Section

Protocol

alarmIRPNamingContext

This is the naming context where the alarm IRP agent is located. This field is valid only for Cello Network Elements. This field is not mandatory and is modifiable.

Data Source

OSSRC

Source Field

alarmIRPNamingContext

Source Section

Protocol

ATList

x25LinkSelection

Data Source

OSSRC

Source Field

ATList

Source Section

Protocol

authenticationMethod

Data Source

OSSRC

Source Field

authenticationMethod

Source Section

Protocol

communityString

Data Source

OSSRC

Source Field

communityString

Source Section

Protocol

context

Data Source

OSSRC

© Copyright IBM Corp. 2008, 2009. All Rights Reserved.

Source Field

context

Source Section

Protocol

encryptionMethod

Data Source

OSSRC

Source Field

encryptionMethod

Source Section

Protocol

ftpArea

ftpArea

Data Source

OSSRC

Source Field

ftpArea

Source Section

Protocol

ftpRoot

ftpRoot

Data Source

OSSRC

Source Field

ftpRoot

Source Section

Protocol

namingPort

This is the naming port of the Name Service on the Network Element itself (if a Name Service exists).

Data Source

OSSRC

Source Field

namingPort

Source Section

Protocol

namingUrl

The URL of the Naming Service (if applicable). In the Cello case this is the URL to the .ior file, which can then be used to connect to the CS on the Network Element.

Data Source

OSSRC

Source Field

namingUrl

Source Section

Protocol

notificationIRPAgentVersion

This is the version of the 3GPP notifications that the Network Element agent complies to. This field is valid only for Cello Network Elements. This field is not mandatory and is modifiable.

Data Source

OSSRC

Source Field

notificationIRPAgentVersion

© Copyright IBM Corp. 2008, 2009. All Rights Reserved.

Source Section

Protocol

notificationIRPNamingContext

This is the naming context where the notification IRP agent is located. This field is valid only for Cello Network Elements. This field is not mandatory and is modifiable.

Data Source

OSSRC

Source Field

notificationIRPNamingContext

Source Section

Protocol

number_id

Index of the Protocol. The actual name of the cunter is number which is protected in oracle.

Data Source

OSSRC

Source Field

number

Source Section

Protocol

port

Data Source

OSSRC

Source Field

port

Source Section

Protocol

protocolType

Data Source

OSSRC

Source Field

protocolType

Source Section

Protocol

protocolVersion

Data Source

OSSRC

Source Field

protocolVersion

Source Section

Protocol

securedFtpRoot

securedFtpRoot

Data Source

OSSRC

Source Field

securedFtpRoot

Source Section

Protocol

© Copyright IBM Corp. 2008, 2009. All Rights Reserved.

securityName

Data Source

OSSRC

Source Field

securityName

Source Section

Protocol

Protocol_Sub Primitive Calculations

The following is a list of primitive calculations for the Protocol_Sub entity.

GRAPHmultiLineSeparator

Special Control Field for Multi-Line Graphs

Calculation

```
""
```

NUMDAYS

of days in Report

Calculation

```
DAYSINREPORT()
```

NUMHOURS

of hours in Summation Data

Calculation

Protocol_Sub Peg Counts

The following is a list of peg counts for the Protocol_Sub entity.

alarmIRPAgentVersion

This is the version of the 3GPP alarms that the Network Element agent complies to. This field is valid only for Cello Network Elements. This field is not mandatory and is modifiable.

Data Source

OSSRC

Source Field

alarmIRPAgentVersion

Source Section

Protocol

alarmIRPNamingContext

This is the naming context where the alarm IRP agent is located. This field is valid only for Cello Network Elements. This field is not mandatory and is modifiable.

Data Source

OSSRC

Source Field

alarmIRPNamingContext

Source Section

Protocol

ATList

x25LinkSelection

Data Source

OSSRC

Source Field

ATList

Source Section

Protocol

© Copyright IBM Corp. 2008, 2009. All Rights Reserved.

authenticationMethod

Data Source

OSSRC

Source Field

authenticationMethod

Source Section

Protocol

communityString

Data Source

OSSRC

Source Field

communityString

Source Section

Protocol

context

Data Source

OSSRC

Source Field

context

Source Section

Protocol

encryptionMethod

Data Source

OSSRC

Source Field

encryptionMethod

Source Section

Protocol

ftpArea

ftpArea

Data Source

OSSRC

Source Field

ftpArea

Source Section

Protocol

ftpRoot

ftpRoot

Data Source

OSSRC

Source Field

ftpRoot

Source Section

Protocol

namingPort

This is the naming port of the Name Service on the Network Element itself (if a Name Service exists).

© Copyright IBM Corp. 2008, 2009. All Rights Reserved.

Data Source

OSSRC

Source Field

namingPort

Source Section

Protocol

namingUrl

The URL of the Naming Service (if applicable). In the Cello case this is the URL to the .ior file, which can then be used to connect to the CS on the Network Element.

Data Source

OSSRC

Source Field

namingUrl

Source Section

Protocol

notificationIRPAgentVersion

This is the version of the 3GPP notifications that the Network Element agent complies to. This field is valid only for Cello Network Elements. This field is not mandatory and is modifiable.

Data Source

OSSRC

Source Field

notificationIRPAgentVersion

Source Section

Protocol

notificationIRPNamingContext

This is the naming context where the notification IRP agent is located. This field is valid only for Cello Network Elements. This field is not mandatory and is modifiable.

Data Source

OSSRC

Source Field

notificationIRPNamingContext

Source Section

Protocol

number_id

Index of the Protocol. The actual name of the counter is number which is protected in oracle.

Data Source

OSSRC

Source Field

number

Source Section

Protocol

port

Data Source

OSSRC

Source Field

port

Source Section

Protocol

protocolType

Data Source

OSSRC

© Copyright IBM Corp. 2008, 2009. All Rights Reserved.

Source Field

protocolType

Source Section

Protocol

protocolVersion

Data Source

OSSRC

Source Field

protocolVersion

Source Section

Protocol

securedFtpRoot

securedFtpRoot

Data Source

OSSRC

Source Field

securedFtpRoot

Source Section

Protocol

securityName

Data Source

OSSRC

Source Field

securityName

Source Section

Protocol

Site Primitive Calculations

The following is a list of primitive calculations for the Site entity.

GRAPHmultiLineSeparator

Special Control Field for Multi-Line Graphs

Calculation

```
""
```

NUMDAYS

of days in Report

Calculation

```
DAYSINREPORT()
```

NUMHOURS

of hours in Summation Data

Calculation

Site Peg Counts

The following is a list of peg counts for the Site entity.

altitude

The altitude above/below sea level where this object is located. Positive values represent meters above the ground whereas negative values represent meters below the ground.

Data Source

OSSRC

Source Field

altitude

© Copyright IBM Corp. 2008, 2009. All Rights Reserved.

Source Section

Site

datum

This gives the geographical information a context. A typical value is "wgs84".

Data Source

OSSRC

Source Field

datum

Source Section

Site

freeText

The operator is free to populate this with whatever information is relevant for this site for example the directions to the site etc.

Data Source

OSSRC

Source Field

freeText

Source Section

Site

latitude

The latitude at which this object is located.

Data Source

OSSRC

Source Field

latitude

Source Section

Site

location

Used to identify the location of the Site.

Data Source

OSSRC

Source Field

location

Source Section

Site

longitude

The longitude at which this object is located.

Data Source

OSSRC

Source Field

longitude

Source Section

Site

timeZone

Use this field to specify the time zone that the Site is in. The time zone value is specified in Universal Time Coordinates (UTC), which has the format: UTC+/-hh:mm. For example, UTC+01:00 refers to the timezone in Stockholm (in Winter).

Data Source

OSSRC

Source Field

timeZone

© Copyright IBM Corp. 2008, 2009. All Rights Reserved.

Source Section

Site

userLabel

Unique name used to identify the Site.

Data Source

OSSRC

Source Field

userLabel

Source Section

Site

SubNetwork Primitive Calculations

The following is a list of primitive calculations for the SubNetwork entity.

GRAPHmultiLineSeparator

Special Control Field for Multi-Line Graphs

Calculation

```
""
```

NUMDAYS

of days in Report

Calculation

```
DAYSINREPORT()
```

NUMHOURS

of hours in Summation Data

Calculation

SubNetwork Peg Counts

The following is a list of peg counts for the SubNetwork entity.

exists_optional

Optional attribute. Not used by ARNE. Counter name is changed from exist beacuse it can not be Oracle protected words.

Data Source

OSSRC

Source Field

exists

Source Section

SubNetwork

networkType

Used to identify the Type of the SubNetwork.

Data Source

OSSRC

Source Field

networkType

Source Section

SubNetwork

UserLabel

Used to identify the SubNetwork. This could be a name that describes a characteristic of the SubNetwork.

Data Source

OSSRC

Source Field

UserLabel

Source Section

SubNetwork

© Copyright IBM Corp. 2008, 2009. All Rights Reserved.

System Primitive Calculations

The following is a list of primitive calculations for the System entity.

GRAPHmultiLineSeparator

Special Control Field for Multi-Line Graphs

Calculation

```
""
```

NUMDAYS

of days in Report

Calculation

```
DAYSINREPORT()
```

NUMHOURS

of hours in Summation Data

Calculation

© Copyright IBM Corp. 2008, 2009. All Rights Reserved.

15 RNC Traffic Entities

The following figures show the Prospect reporting hierarchy for RNC traffic entities.

Figure 9: Reporting Hierarchy

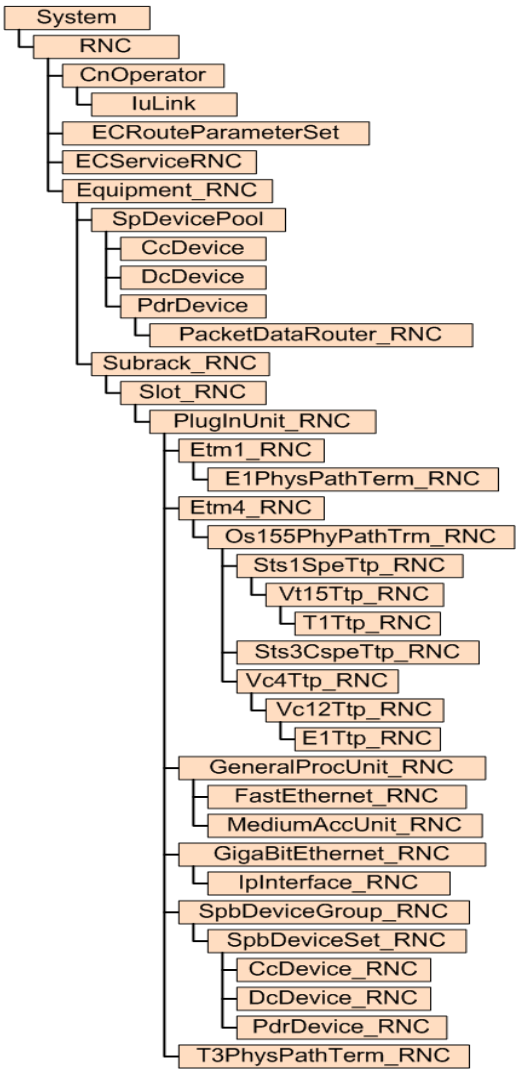

Updated: 2009-07-22

Figure 10: Reporting Hierarchy

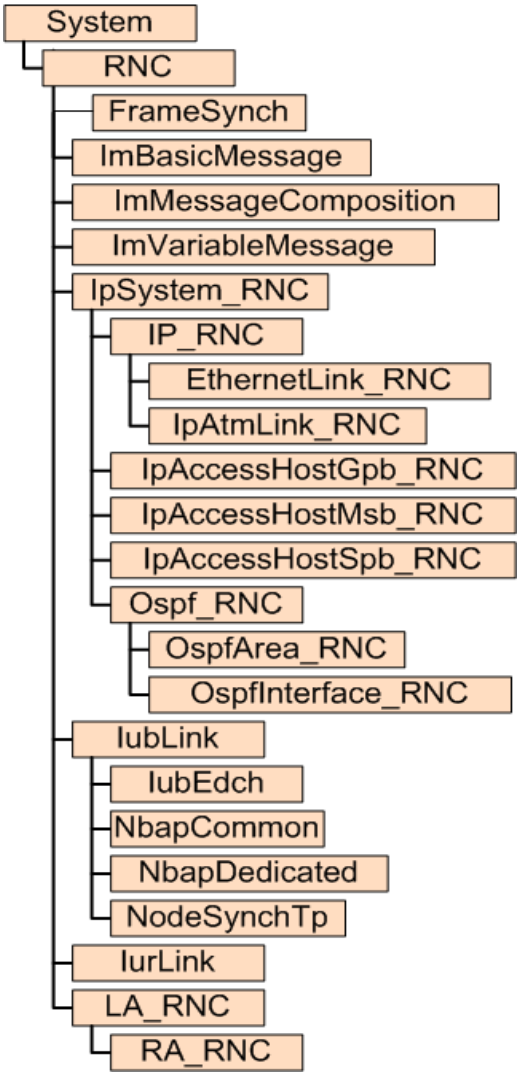

© Copyright IBM Corp. 2008, 2009. All Rights Reserved.

Figure 11: Reporting Hierarchy

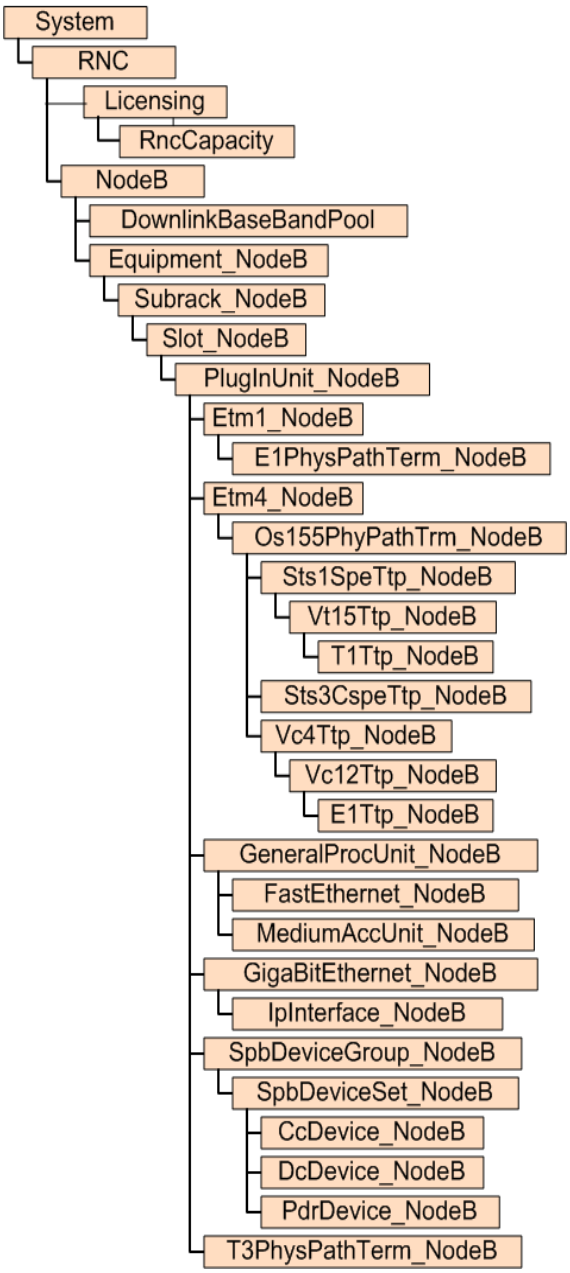

Figure 12: Reporting Hierarchy

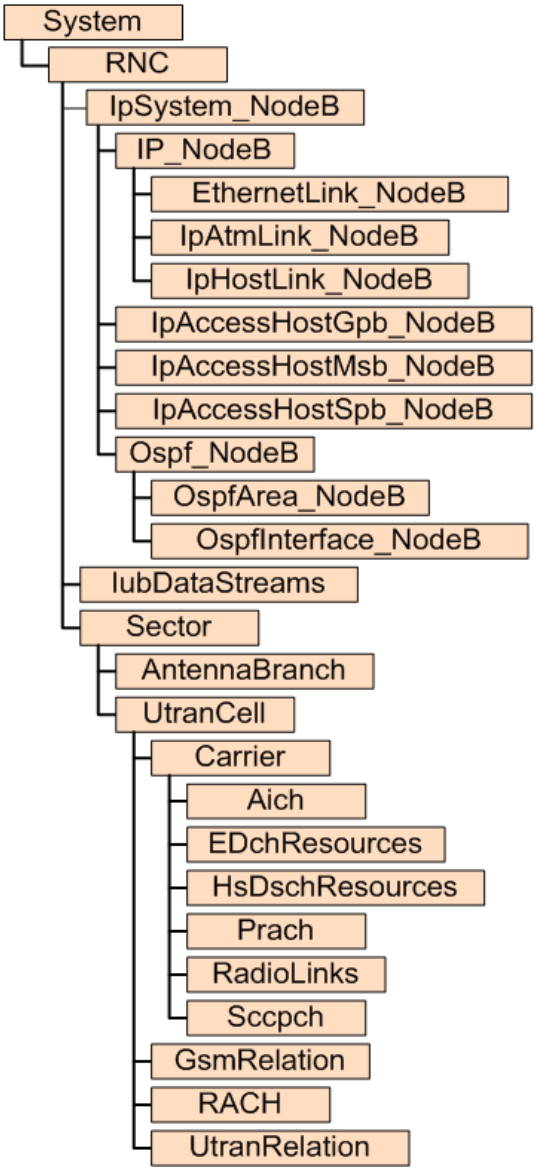

© Copyright IBM Corp. 2008, 2009. All Rights Reserved.

Figure 13: Reporting Hierarchy

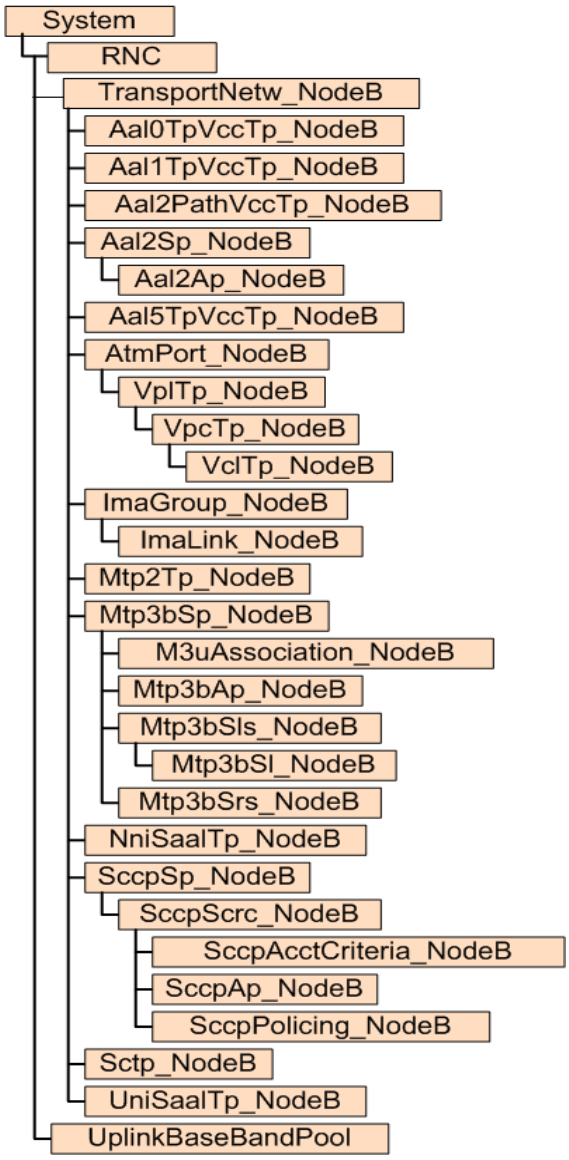

Figure 14: Reporting Hierarchy

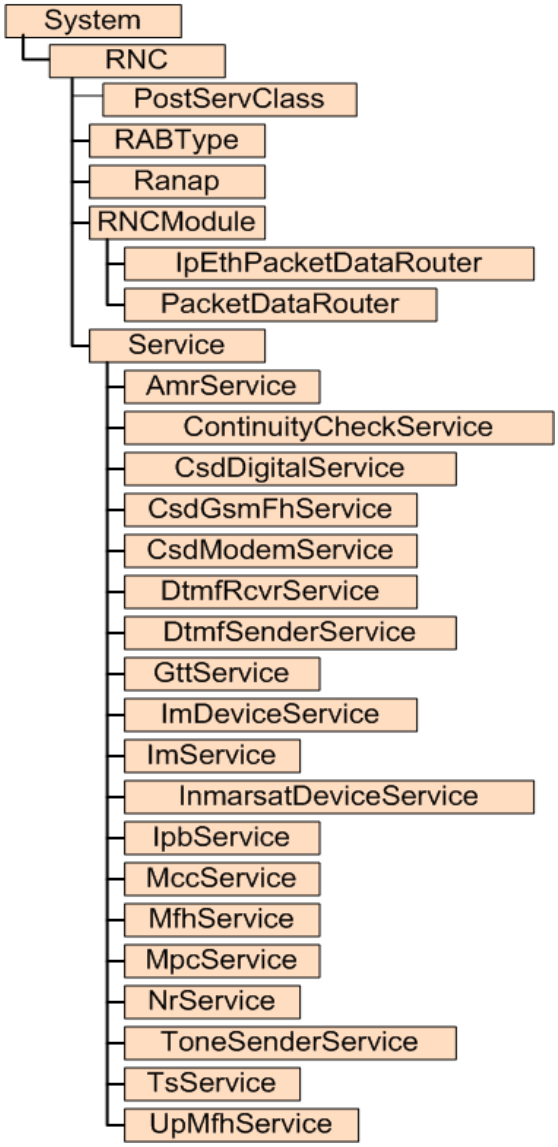

© Copyright IBM Corp. 2008, 2009. All Rights Reserved.

Figure 15: Reporting Hierarchy

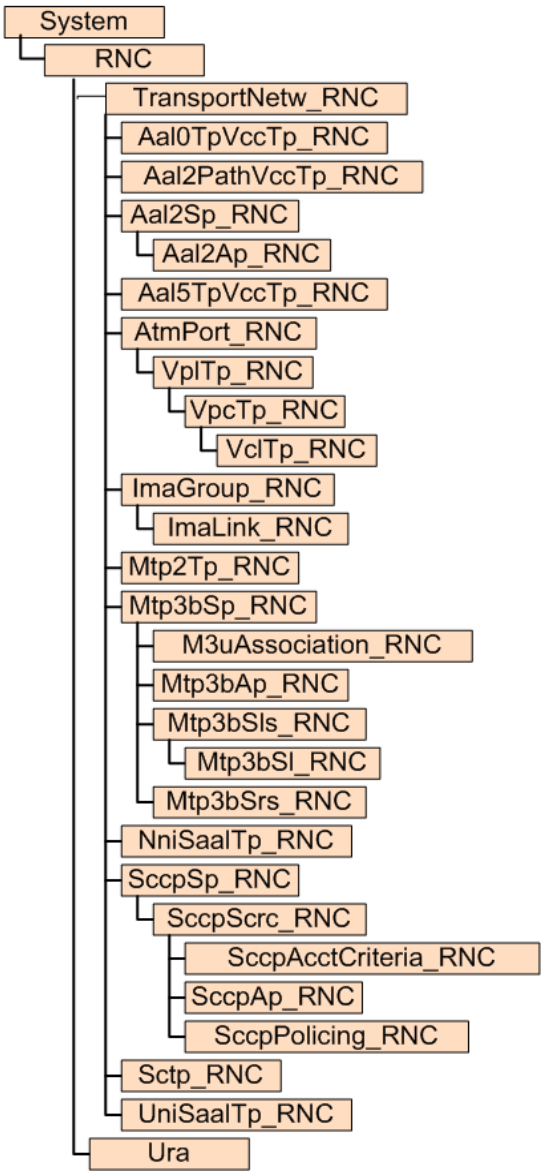

© Copyright IBM Corp. 2008, 2009. All Rights Reserved.

16 RNC Traffic Fields

The following is a list of available RNC Traffic performance data fields.

Aal0TpVccTp_NodeB Primitive Calculations

The following is a list of primitive calculations for the Aal0TpVccTp_NodeB entity.

GRAPHmultiLineSeparator

Special Control Field for Multi-Line Graphs

Calculation

```
""
```

NUMDAYS

of days in Report

Calculation

```
DAYSINREPORT()
```

NUMHOURS

of hours in Summation Data

Calculation

Aal0TpVccTp_NodeB Peg Counts

The following is a list of peg counts for the Aal0TpVccTp_NodeB entity.

PERLENSEC

Period length in seconds

Data Source

NodeB_RNC_RXI

Source Field

perlensec

Source Section

Aal0TpVccTp_NodeB_WMGeneral

PERLENSEC_K

Period length in seconds aggregation summation in time domain and aggregation maximum between Network Elements.

Data Source

NodeB_RNC_RXI

Source Field

perlensec

Source Section

Aal0TpVccTp_NodeB_WMGeneral

pmBwErrBlocks

Number of backward errored blocks.

Data Source

NodeB_RNC_RXI

Source Field

pmBwErrBlocks

Source Section

Aal0TpVccTp_NodeB

pmBwLostCells

Number of backward lost cells.

Data Source

NodeB_RNC_RXI

Source Field

pmBwLostCells

Source Section

Aal0TpVccTp_NodeB

pmBwMissinsCells

Number of backward misinserted cells.

Data Source

NodeB_RNC_RXI

Source Field

pmBwMissinsCells

Source Section

Aal0TpVccTp_NodeB

pmFwErrBlocks

Number of forwarded errored blocks.

Data Source

NodeB_RNC_RXI

Source Field

pmFwErrBlocks

Source Section

Aal0TpVccTp_NodeB

pmFwLostCells

Number of forwarded lost cells.

Data Source

NodeB_RNC_RXI

Source Field

pmFwLostCells

Source Section

Aal0TpVccTp_NodeB

pmFwMissinsCells

Number of forwarded misinserted cells.

Data Source

NodeB_RNC_RXI

Source Field

pmFwMissinsCells

Source Section

Aal0TpVccTp_NodeB

pmLostBrCells

Number of lost bit rate cells.

Data Source

NodeB_RNC_RXI

Source Field

pmLostBrCells

Source Section

Aal0TpVccTp_NodeB

pmLostFpmCells

Number of lost Forward Performance Monitoring (FPM) cells.

Data Source

NodeB_RNC_RXI

Source Field

pmLostFpmCells

Source Section

Aal0TpVccTp_NodeB

Aal0TpVccTp_RNC Primitive Calculations

The following is a list of primitive calculations for the Aal0TpVccTp_RNC entity.

GRAPHmultiLineSeparator

Special Control Field for Multi-Line Graphs

Calculation

```
""
```

NUMDAYS

of days in Report

Calculation

```
DAYSINREPORT()
```

NUMHOURS

of hours in Summation Data

Calculation

Aal0TpVccTp_RNC Peg Counts

The following is a list of peg counts for the Aal0TpVccTp_RNC entity.

PERLENSEC

Period length in seconds

Data Source

NodeB_RNC_RXI

Source Field

perlensec

Source Section

Aal0TpVccTp_RNC_WMGeneral

PERLENSEC_K

Period length in seconds aggregation summation in time domain and aggregation maximum between Network Elements.

Data Source

NodeB_RNC_RXI

Source Field

perlensec

Source Section

Aal0TpVccTp_RNC_WMGeneral

pmBwErrBlocks

Number of backward errored blocks.

Data Source

NodeB_RNC_RXI

Source Field

pmBwErrBlocks

Source Section

Aal0TpVccTp_RNC

pmBwLostCells

Number of backward lost cells.

Data Source

NodeB_RNC_RXI

Source Field

pmBwLostCells

Source Section

Aal0TpVccTp_RNC

pmBwMissinsCells

Number of backward misinserted cells.

Data Source

NodeB_RNC_RXI

Source Field

pmBwMissinsCells

Source Section

Aal0TpVccTp_RNC

pmFwErrBlocks

Number of forwarded errored blocks.

Data Source

NodeB_RNC_RXI

Source Field

pmFwErrBlocks

Source Section

Aal0TpVccTp_RNC

pmFwLostCells

Number of forwarded lost cells.

Data Source

NodeB_RNC_RXI

Source Field

pmFwLostCells

Source Section

Aal0TpVccTp_RNC

pmFwMissinsCells

Number of forwarded misinserted cells.

Data Source

NodeB_RNC_RXI

Source Field

pmFwMissinsCells

Source Section

Aal0TpVccTp_RNC

pmLostBrCells

Number of lost bit rate cells.

Data Source

NodeB_RNC_RXI

Source Field

pmLostBrCells

Source Section

Aal0TpVccTp_RNC

pmLostFpmCells

Number of lost Forward Performance Monitoring (FPM) cells.

Data Source

NodeB_RNC_RXI

Source Field

pmLostFpmCells

Source Section

Aal0TpVccTp_RNC

Aal1TpVccTp_NodeB Primitive Calculations

The following is a list of primitive calculations for the Aal1TpVccTp_NodeB entity.

GRAPHmultiLineSeparator

Special Control Field for Multi-Line Graphs

Calculation

```
""
```

NUMDAYS

of days in Report

Calculation

```
DAYSINREPORT()
```

NUMHOURS

of hours in Summation Data

Calculation

Aal1TpVccTp_NodeB Peg Counts

The following is a list of peg counts for the Aal1TpVccTp_NodeB entity.

NodeB_RELEASE

Release

Data Source

NodeB_RXI

Source Field

NodeB_RELEASE

Source Section

Aal1TpVccTp

PERLENSEC

Period length in seconds

Source Field

PERLENSEC

Source Section

Aal1TpVccTp_NodeB_WMGeneral

PERLENSEC_K

Period length in seconds aggregation summation in time domain and aggregation maximum between Network Elements.

Source Field

PERLENSEC

Source Section

Aal1TpVccTp_NodeB_WMGeneral

pmBwErrBlocks

Number of backward errored blocks.

Data Source

NodeB_RXI

Source Field

pmBwErrBlocks

Source Section

Aal1TpVccTp

pmBwLostCells

Number of backward lost cells.

Data Source

NodeB_RXI

Source Field

pmBwLostCells

Source Section

Aal1TpVccTp

pmBwMissinsCells

The total number of misinserted backward cells.

Data Source

NodeB_RXI

Source Field

pmBwMissinsCells

Source Section

Aal1TpVccTp

pmFwErrBlocks

Number of forwarded errored blocks.

Data Source

NodeB_RXI

Source Field

pmFwErrBlocks

Source Section

Aal1TpVccTp

pmFwLostCells

Number of forwarded lost cells.

Data Source

NodeB_RXI

Source Field

pmFwLostCells

Source Section

Aal1TpVccTp

pmFwMissinsCells

The total number of forward misinserted cells.

Data Source

NodeB_RXI

Source Field

pmFwMissinsCells

Source Section

Aal1TpVccTp

pmLostBrCells

Number of lost bit rate cells.

Data Source

NodeB_RXI

Source Field

pmLostBrCells

Source Section

Aal1TpVccTp

pmLostFpmCells

Number of lost Forward Performance Monitoring (FPM) cells.

Data Source

NodeB_RXI

Source Field

pmLostFpmCells

Source Section

Aal1TpVccTp

Aal2Ap_NodeB Primitive Calculations

The following is a list of primitive calculations for the Aal2Ap_NodeB entity.

Aal2_SuccAll_NodeB

The number of successful Aal2 connection establishment requests, incoming and outgoing. The success rate for all connection establishments.

Calculation

```
vsum(pmSuccInConnsRemote,pmSuccOutConnsRemote)
```

Aal2_UnSuccIn_NodeB

Sum of the rejected incoming Aal2 connection establishment requests.The requests has either rejected by this node, local, by another node, remote.

Calculation

```
vsum(pmUnSuccInConnsRemote,pmUnSuccInConnsLocal)
```

Aal2_UnSuccOut_NodeB

Sum of the rejected outgoing Aal2 connection establishment requests. The requests has either rejected by this node, local, by another node, remote.

Calculation

```
vsum(pmUnSuccInConnsRemote,pmUnSuccInConnsLocal)
```

GRAPHmultiLineSeparator

Special Control Field for Multi-Line Graphs

Calculation

```
""
```

NUMDAYS

of days in Report

Calculation

```
DAYSINREPORT()
```

NUMHOURS

of hours in Summation Data

Calculation

Aal2Ap_NodeB Peg Counts

The following is a list of peg counts for the Aal2Ap_NodeB entity.

NodeB_RELEASE

Release

Data Source

NodeB_RNC_RXI

Source Section

Aal2Ap_NodeB

PERLENSEC

Period Length

Data Source

NodeB_RNC_RXI

Source Field

perlensec

Source Section

Aal2Ap_NodeB_WMGeneral

PERLENSEC_K

Period length in seconds aggregation summation in time domain and aggregation maximum between Network Elements.

Data Source

NodeB_RNC_RXI

Source Field

perlensec

Source Section

Aal2Ap_NodeB_WMGeneral

pmExisOrigConns

Number of existing connections for the AP originating in this node.

Data Source

NodeB_RNC_RXI

Source Field

pmExisOrigConns

Source Section

Aal2Ap_NodeB

pmExisTermConns

Number of existing connections for the AP terminating in this node.

Data Source

NodeB_RNC_RXI

Source Field

pmExisTermConns

Source Section

Aal2Ap_NodeB

pmExisTransConns

Number of existing connections for the AP transiting in this node.

Data Source

NodeB_RNC_RXI

Source Field

pmExisTransConns

Source Section

Aal2Ap_NodeB

pmSuccInConnsRemote

Number of successful establishments of incoming connections on this AP.

Data Source

NodeB_RNC_RXI

Source Field

pmSuccInConnsRemote

Source Section

Aal2Ap_NodeB

pmSuccInConnsRemoteQosClassA

Number of successful establishments of incoming connections on this AAL2 Access Point (AP).

Data Source

NodeB_RXI

Source Field

pmSuccInConnsRemoteQosClassA

Source Section

Aal2Ap

pmSuccInConnsRemoteQosClassB

Number of successful establishments of incoming connections on this AAL2 Access Point (AP).

Data Source

NodeB_RXI

Source Field

pmSuccInConnsRemoteQosClassB

Source Section

Aal2Ap

pmSuccInConnsRemoteQosClassC

Number of successful establishments of incoming connections on this AAL2 Access Point (AP).

Data Source

NodeB_RXI

Source Field

pmSuccInConnsRemoteQosClassC

Source Section

Aal2Ap

pmSuccInConnsRemoteQosClassD

Number of successful establishments of incoming connections on this AAL2 Access Point (AP).

Data Source

NodeB_RXI

Source Field

pmSuccInConnsRemoteQosClassD

Source Section

Aal2Ap

pmSuccOutConnsRemote

Number of successful establishments of outgoing connections on this AP.

Data Source

NodeB_RNC_RXI

Source Field

pmSuccOutConnsRemote

Source Section

Aal2Ap_NodeB

pmSuccOutConnsRemoteQosClassA

Number of successful establishments of outgoing connections on this AAL2 Access Point (AP).

Data Source

NodeB_RXI

Source Field

pmSuccOutConnsRemoteQosClassA

Source Section

Aal2Ap

pmSuccOutConnsRemoteQosClassB

Number of successful establishments of outgoing connections on this AAL2 Access Point (AP).

Data Source

NodeB_RXI

Source Field

pmSuccOutConnsRemoteQosClassB

Source Section

Aal2Ap

pmSuccOutConnsRemoteQosClassC

Number of successful establishments of outgoing connections on this AAL2 Access Point (AP).

Data Source

NodeB_RXI

Source Field

pmSuccOutConnsRemoteQosClassC

Source Section

Aal2Ap

pmSuccOutConnsRemoteQosClassD

Number of successful establishments of outgoing connections on this AAL2 Access Point (AP).

Data Source

NodeB_RXI

Source Field

pmSuccOutConnsRemoteQosClassD

Source Section

Aal2Ap

pmUnRecMessages

Number of received unrecognized Q.2630.1 messages on this AP.

Data Source

NodeB_RNC_RXI

Source Field

pmUnRecMessages

Source Section

Aal2Ap_NodeB

pmUnRecParams

Number of received Q.2630.1 messages with unrecognized parameters on this AP.

Data Source

NodeB_RNC_RXI

Source Field

pmUnRecParams

Source Section

Aal2Ap_NodeB

pmUnSuccInConnsLocal

Number of unSucc att to allocate Common Part Sub-layer (CPS) resources- Retired fr 5.0.11.0.0

Data Source

NodeB_RNC_RXI

Source Field

pmUnSuccInConnsLocal

Source Section

Aal2Ap_NodeB

pmUnSuccInConnsLocalQosClassA

Number of unsuccessful attempts to allocate AAL2 path resources (Common Part Sublayer) during establishment of incoming connections on this Access Point (AP) caused by Channel Identifier (CID) and/or bandwidth collision or mismatch of Call Admission

Data Source

NodeB_RXI

Source Field

pmUnSuccInConnsLocalQosClassA

Source Section

Aal2Ap

pmUnSuccInConnsLocalQosClassB

Number of unsuccessful attempts to allocate AAL2 path resources (Common Part Sublayer) during establishment of incoming connections on this Access Point (AP) caused by Channel Identifier (CID) and/or bandwidth collision or mismatch of Call Admission

Data Source

NodeB_RXI

Source Field

pmUnSuccInConnsLocalQosClassB

Source Section

Aal2Ap

pmUnSuccInConnsLocalQosClassC

Number of unsuccessful attempts to allocate AAL2 path resources (Common Part Sublayer) during establishment of incoming connections on this Access Point (AP) caused by Channel Identifier (CID) and/or bandwidth collision or mismatch of Call Admission Control (CAC) between peers.

Data Source

NodeB_RXI

Source Field

pmUnSuccInConnsLocalQosClassC

Source Section

Aal2Ap

pmUnSuccInConnsLocalQosClassD

Number of unsuccessful attempts to allocate AAL2 path resources (Common Part Sublayer) during establishment of incoming connections on this Access Point (AP) caused by Channel Identifier (CID) and/or bandwidth collision or mismatch of Call Admission Control (CAC) between peers.

Data Source

NodeB_RXI

Source Field

pmUnSuccInConnsLocalQosClassD

Source Section

Aal2Ap

pmUnSuccInConnsRemote

Number of unSucc estab of inc conn on this AP caused by rejection beyond this node.- Retired fr 5.0.11.0.0

Data Source

NodeB_RNC_RXI

Source Field

pmUnSuccInConnsRemote

Source Section

Aal2Ap_NodeB

pmUnSuccInConnsRemoteQosClassA

Number of unsuccessful establishments of incoming connections on this AAL2 Access Point caused by the reject from the AAL2 Access Point in the remote node.

Data Source

NodeB_RXI

Source Field

pmUnSuccInConnsRemoteQosClassA

Source Section

Aal2Ap

pmUnSuccInConnsRemoteQosClassB

Number of unsuccessful establishments of incoming connections on this AAL2 Access Point caused by the reject from the AAL2 Access Point in the remote node.

Data Source

NodeB_RXI

Source Field

pmUnSuccInConnsRemoteQosClassB

Source Section

Aal2Ap

pmUnSuccInConnsRemoteQosClassC

Number of unsuccessful establishments of incoming connections on this AAL2 Access Point caused by the reject from the AAL2 Access Point in the remote node.

Data Source

NodeB_RXI

Source Field

pmUnSuccInConnsRemoteQosClassC

Source Section

Aal2Ap

pmUnSuccInConnsRemoteQosClassD

Number of unsuccessful establishments of incoming connections on this AAL2 Access Point caused by the reject from the AAL2 Access Point in the remote node.

Data Source

NodeB_RXI

Source Field

pmUnSuccInConnsRemoteQosClassD

Source Section

Aal2Ap

pmUnSuccOutConnsLocal

Number of unSucc att to allocate CPS resources during estabt of out conn on this AP- Retired fr 5.0.11.0.0

Data Source

NodeB_RNC_RXI

Source Field

pmUnSuccOutConnsLocal

Source Section

Aal2Ap_NodeB

pmUnSuccOutConnsLocalQosClassA

Number of unsuccessful attempts to allocate AAL2 resources (Common Part sublayer) during establishment of outgoing connections on this Access Point (AP). Caused by Rejects in Connections Admission Control (CAC).

Data Source

NodeB_RXI

Source Field

pmUnSuccOutConnsLocalQosClassA

Source Section

Aal2Ap

pmUnSuccOutConnsLocalQosClassB

Number of unsuccessful attempts to allocate AAL2 resources (Common Part sublayer) during establishment of outgoing connections on this Access Point (AP). Caused by Rejects in Connections Admission Control (CAC).

Data Source

NodeB_RXI

Source Field

pmUnSuccOutConnsLocalQosClassB

Source Section

Aal2Ap

pmUnSuccOutConnsLocalQosClassC

Number of unsuccessful attempts to allocate AAL2 resources (Common Part sublayer) during establishment of outgoing connections on this Access Point (AP). Caused by Rejects in Connections Admission Control (CAC).

Data Source

NodeB_RXI

Source Field

pmUnSuccOutConnsLocalQosClassC

Source Section

Aal2Ap

pmUnSuccOutConnsLocalQosClassD

Number of unsuccessful attempts to allocate AAL2 resources (Common Part sublayer) during establishment of outgoing connections on this Access Point (AP). Caused by Rejects in Connections Admission Control (CAC).

Data Source

NodeB_RXI

Source Field

pmUnSuccOutConnsLocalQosClassD

Source Section

Aal2Ap

pmUnSuccOutConnsRemote

Number of unSucc estab of out conn on this AP caused by rejection from remote side- Retired fr 5.0.11.0.0

Data Source

NodeB_RNC_RXI

Source Field

pmUnSuccOutConnsRemote

Source Section

Aal2Ap_NodeB

pmUnSuccOutConnsRemoteQosClassA

Number of unsuccessful establishments of outgoing connections on this AAL2 Access Point (AP).

Data Source

NodeB_RXI

Source Field

pmUnSuccOutConnsRemoteQosClassA

Source Section

Aal2Ap

pmUnSuccOutConnsRemoteQosClassB

Number of unsuccessful establishments of outgoing connections on this AAL2 Access Point (AP).

Data Source

NodeB_RXI

Source Field

pmUnSuccOutConnsRemoteQosClassB

Source Section

Aal2Ap

pmUnSuccOutConnsRemoteQosClassC

Number of unsuccessful establishments of outgoing connections on this AAL2 Access Point (AP).

Data Source

NodeB_RXI

Source Field

pmUnSuccOutConnsRemoteQosClassC

Source Section

Aal2Ap

pmUnSuccOutConnsRemoteQosClassD

Number of unsuccessful establishments of outgoing connections on this AAL2 Access Point (AP).

Data Source

NodeB_RXI

Source Field

pmUnSuccOutConnsRemoteQosClassD

Source Section

Aal2Ap

Aal2Ap_RNC Primitive Calculations

The following is a list of primitive calculations for the Aal2Ap_RNC entity.

Aal2_SuccAll_RNC

The number of successful Aal2 connection establishment requests, incoming and outgoing. The success rate for all connection establishments.

Calculation

```
vsum(pmSuccInConnsRemote,pmSuccOutConnsRemote)
```

Aal2_UnSuccIn_RNC

Sum of the rejected incoming Aal2 connection establishment requests.The requests has either rejected by this node, local, by another node, remote.

Updated: 2009-07-22

Calculation

```
vsum(pmUnSuccInConnsRemote,pmUnSuccInConnsLocal)
```

Aal2_UnSuccOut_RNC

Sum of the rejected outgoing Aal2 connection establishment requests. The requests has either rejected by this node, local, by another node, remote.

Calculation

```
vsum(pmUnSuccInConnsRemote,pmUnSuccInConnsLocal)
```

GRAPHmultiLineSeparator

Special Control Field for Multi-Line Graphs

Calculation

```
""
```

NUMDAYS

of days in Report

Calculation

```
DAYSINREPORT()
```

NUMHOURS

of hours in Summation Data

Calculation

Aal2Ap_RNC Peg Counts

The following is a list of peg counts for the Aal2Ap_RNC entity.

PERLENSEC

Period Length

Data Source

NodeB_RNC_RXI

Source Field

perlensec

Source Section

Aal2Ap_RNC_WMGeneral

PERLENSEC_K

Period length in seconds aggregation summation in time domain and aggregation maximum between Network Elements.

Data Source

NodeB_RNC_RXI

Source Field

perlensec

Source Section

Aal2Ap_RNC_WMGeneral

pmExisOrigConns

Number of existing connections for the AP originating in this node.

Data Source

NodeB_RNC_RXI

Source Field

pmExisOrigConns

Source Section

Aal2Ap_RNC

pmExisTermConns

Number of existing connections for the AP terminating in this node.

Data Source

NodeB_RNC_RXI

Source Field

pmExisTermConns

Source Section

Aal2Ap_RNC

pmExisTransConns

Number of existing connections for the AP transiting in this node.

Data Source

NodeB_RNC_RXI

Source Field

pmExisTransConns

Source Section

Aal2Ap_RNC

pmSuccInConnsRemote

Number of successful establishments of incoming connections on this AP.

Data Source

NodeB_RNC_RXI

Source Field

pmSuccInConnsRemote

Source Section

Aal2Ap_RNC

pmSuccInConnsRemoteQosClassA

Number of successful establishments of incoming connections on this AAL2 Access Point (AP).

Data Source

RNC_RXI

Source Field

pmSuccInConnsRemoteQosClassA

Source Section

Aal2Ap

pmSuccInConnsRemoteQosClassB

Number of successful establishments of incoming connections on this AAL2 Access Point (AP).

Data Source

RNC_RXI

Source Field

pmSuccInConnsRemoteQosClassB

Source Section

Aal2Ap

pmSuccInConnsRemoteQosClassC

Number of successful establishments of incoming connections on this AAL2 Access Point (AP).

Data Source

RNC_RXI

Source Field

pmSuccInConnsRemoteQosClassC

Source Section

Aal2Ap

pmSuccInConnsRemoteQosClassD

Number of successful establishments of incoming connections on this AAL2 Access Point (AP).

Data Source

RNC_RXI

Source Field

pmSuccInConnsRemoteQosClassD

Source Section

Aal2Ap

pmSuccOutConnsRemote

Number of successful establishments of outgoing connections on this AP.

Data Source

NodeB_RNC_RXI

Source Field

pmSuccOutConnsRemote

Source Section

Aal2Ap_RNC

pmSuccOutConnsRemoteQosClassA

Number of successful establishments of outgoing connections on this AAL2 Access Point (AP).

Data Source

RNC_RXI

Source Field

pmSuccOutConnsRemoteQosClassA

Source Section

Aal2Ap

pmSuccOutConnsRemoteQosClassB

Number of successful establishments of outgoing connections on this AAL2 Access Point (AP).

Data Source

RNC_RXI

Source Field

pmSuccOutConnsRemoteQosClassB

Source Section

Aal2Ap

pmSuccOutConnsRemoteQosClassC

Number of successful establishments of outgoing connections on this AAL2 Access Point (AP).

Data Source

RNC_RXI

Source Field

pmSuccOutConnsRemoteQosClassC

Source Section

Aal2Ap

pmSuccOutConnsRemoteQosClassD

Number of successful establishments of outgoing connections on this AAL2 Access Point (AP).

Data Source

RNC_RXI

Source Field

pmSuccOutConnsRemoteQosClassD

Source Section

Aal2Ap

pmUnRecMessages

Number of received unrecognized Q.2630.1 messages on this AP.

Data Source

NodeB_RNC_RXI

Source Field

pmUnRecMessages

Source Section

Aal2Ap_RNC

pmUnRecParams

Number of received Q.2630.1 messages with unrecognized parameters on this AP.

Data Source

NodeB_RNC_RXI

Source Field

pmUnRecParams

Source Section

Aal2Ap_RNC

pmUnSuccInConnsLocal

Number of unSucc att to allocate Common Part Sub-layer (CPS) resources- Retired fr 5.0.11.0.0

Data Source

NodeB_RNC_RXI

Source Field

pmUnSuccInConnsLocal

Source Section

Aal2Ap_RNC

pmUnSuccInConnsLocalQosClassA

Number of unsuccessful attempts to allocate AAL2 path resources (Common Part Sublayer) during establishment of incoming connections on this Access Point (AP) caused by Channel Identifier (CID) and/or bandwidth collision or mismatch of Call Admission

Data Source

RNC_RXI

Source Field

pmUnSuccInConnsLocalQosClassA

Source Section

Aal2Ap

pmUnSuccInConnsLocalQosClassB

Number of unsuccessful attempts to allocate AAL2 path resources (Common Part Sublayer) during establishment of incoming connections on this Access Point (AP) caused by Channel Identifier (CID) and/or bandwidth collision or mismatch of Call Admission

Data Source

RNC_RXI

Source Field

pmUnSuccInConnsLocalQosClassB

Source Section

Aal2Ap

pmUnSuccInConnsLocalQosClassC

Number of unsuccessful attempts to allocate AAL2 path resources (Common Part Sublayer) during establishment of incoming connections on this Access Point (AP) caused by Channel Identifier (CID) and/or bandwidth collision or mismatch of Call Admission Control (CAC) between peers.

Data Source

RNC_RXI

Source Field

pmUnSuccInConnsLocalQosClassC

Source Section

Aal2Ap

pmUnSuccInConnsLocalQosClassD

Number of unsuccessful attempts to allocate AAL2 path resources (Common Part Sublayer) during establishment of incoming connections on this Access Point (AP) caused by Channel Identifier (CID) and/or bandwidth collision or mismatch of Call Admission Control (CAC) between peers.

Data Source

RNC_RXI

Source Field

pmUnSuccInConnsLocalQosClassD

Source Section

Aal2Ap

pmUnSuccInConnsRemote

Number of unSucc estab of inc conn on this AP caused by rejection beyond this node.- Retired fr 5.0.11.0.0

Data Source

NodeB_RNC_RXI

Source Field

pmUnSuccInConnsRemote

Source Section

Aal2Ap_RNC

pmUnSuccInConnsRemoteQosClassA

Number of unsuccessful establishments of incoming connections on this AAL2 Access Point caused by the reject from the AAL2 Access Point in the remote node.

Data Source

RNC_RXI

Source Field

pmUnSuccInConnsRemoteQosClassA

Source Section

Aal2Ap

pmUnSuccInConnsRemoteQosClassB

Number of unsuccessful establishments of incoming connections on this AAL2 Access Point caused by the reject from the AAL2 Access Point in the remote node.

Data Source

RNC_RXI

Source Field

pmUnSuccInConnsRemoteQosClassB

Source Section

Aal2Ap

pmUnSuccInConnsRemoteQosClassC

Number of unsuccessful establishments of incoming connections on this AAL2 Access Point caused by the reject from the AAL2 Access Point in the remote node.

Data Source

RNC_RXI

Source Field

pmUnSuccInConnsRemoteQosClassC

Source Section

Aal2Ap

pmUnSuccInConnsRemoteQosClassD

Number of unsuccessful establishments of incoming connections on this AAL2 Access Point caused by the reject from the AAL2 Access Point in the remote node.

Data Source

RNC_RXI

Source Field

pmUnSuccInConnsRemoteQosClassD

Source Section

Aal2Ap

pmUnSuccOutConnsLocal

Number of unSucc att to allocate CPS resources during estabt of out conn on this AP- Retired fr 5.0.11.0.0

Data Source

NodeB_RNC_RXI

Source Field

pmUnSuccOutConnsLocal

Source Section

Aal2Ap_RNC

pmUnSuccOutConnsLocalQosClassA

Number of unsuccessful attempts to allocate AAL2 resources (Common Part sublayer) during establishment of outgoing connections on this Access Point (AP). Caused by Rejects in Connections Admission Control (CAC).

Data Source

RNC_RXI

Source Field

pmUnSuccOutConnsLocalQosClassA

Source Section

Aal2Ap

pmUnSuccOutConnsLocalQosClassB

Number of unsuccessful attempts to allocate AAL2 resources (Common Part sublayer) during establishment of outgoing connections on this Access Point (AP). Caused by Rejects in Connections Admission Control (CAC).

Data Source

RNC_RXI

Source Field

pmUnSuccOutConnsLocalQosClassB

Source Section

Aal2Ap

pmUnSuccOutConnsLocalQosClassC

Number of unsuccessful attempts to allocate AAL2 resources (Common Part sublayer) during establishment of outgoing connections on this Access Point (AP). Caused by Rejects in Connections Admission Control (CAC).

Data Source

RNC_RXI

Source Field

pmUnSuccOutConnsLocalQosClassC

Source Section

Aal2Ap

pmUnSuccOutConnsLocalQosClassD

Number of unsuccessful attempts to allocate AAL2 resources (Common Part sublayer) during establishment of outgoing connections on this Access Point (AP). Caused by Rejects in Connections Admission Control (CAC).

Data Source

RNC_RXI

Source Field

pmUnSuccOutConnsLocalQosClassD

Source Section

Aal2Ap

pmUnSuccOutConnsRemote

Number of unSucc estab of out conn on this AP caused by rejection from remote side- Retired fr 5.0.11.0.0

Data Source

NodeB_RNC_RXI

Source Field

pmUnSuccOutConnsRemote

Source Section

Aal2Ap_RNC

pmUnSuccOutConnsRemoteQosClassA

Number of unsuccessful establishments of outgoing connections on this AAL2 Access Point (AP).

Data Source

RNC_RXI

Source Field

pmUnSuccOutConnsRemoteQosClassA

Source Section

Aal2Ap

pmUnSuccOutConnsRemoteQosClassB

Number of unsuccessful establishments of outgoing connections on this AAL2 Access Point (AP).

Data Source

RNC_RXI

Source Field

pmUnSuccOutConnsRemoteQosClassB

Source Section

Aal2Ap

pmUnSuccOutConnsRemoteQosClassC

Number of unsuccessful establishments of outgoing connections on this AAL2 Access Point (AP).

Data Source

RNC_RXI

Source Field

pmUnSuccOutConnsRemoteQosClassC

Source Section

Aal2Ap

pmUnSuccOutConnsRemoteQosClassD

Number of unsuccessful establishments of outgoing connections on this AAL2 Access Point (AP).

Data Source

RNC_RXI

Source Field

pmUnSuccOutConnsRemoteQosClassD

Source Section

Aal2Ap

RNC_RELEASE

Release

Data Source

NodeB_RNC_RXI

Source Section

Aal2Ap_RNC

Aal2PathVccTp_NodeB Primitive Calculations

The following is a list of primitive calculations for the Aal2PathVccTp_NodeB entity.

GRAPHmultiLineSeparator

Special Control Field for Multi-Line Graphs

Calculation

```
""
```

NUMDAYS

of days in Report

Calculation

```
DAYSINREPORT()
```

NUMHOURS

of hours in Summation Data

Calculation

Aal2PathVccTp_NodeB Peg Counts

The following is a list of peg counts for the Aal2PathVccTp_NodeB entity.

PERLENSEC

Period length in seconds

Data Source

NodeB_RNC_RXI

Source Field

perlensec

Source Section

Aal2PathVccTp_NodeB_WMGeneral

PERLENSEC_K

Period length in seconds aggregation summation in time domain and aggregation maximum between Network Elements.

Data Source

NodeB_RNC_RXI

Source Field

perlensec

Source Section

Aal2PathVccTp_NodeB_WMGeneral

pmBwErrBlocks

Number of backward errored blocks.

Data Source

NodeB_RNC_RXI

Source Field

pmBwErrBlocks

Source Section

Aal2PathVccTp_NodeB

pmBwLostCells

Number of backward lost cells.

Data Source

NodeB_RNC_RXI

Source Field

pmBwLostCells

Source Section

Aal2PathVccTp_NodeB

pmBwMissinsCells

Number of backward misinserted cells.

Data Source

NodeB_RNC_RXI

Source Field

pmBwMissinsCells

Source Section

Aal2PathVccTp_NodeB

pmDiscardedEgressCpsPackets

Number of discarded AAL2 Common Part Sublayer (CPS) packets in egress direction

Data Source

NodeB_RXI

Source Field

pmDiscardedEgressCpsPackets

Source Section

Aal2PathVccTp

pmEgressCpsPackets

Number of AAL2 Common Part Sublayer (CPS) egress packets sent

Data Source

NodeB_RXI

Source Field

pmEgressCpsPackets

Source Section

Aal2PathVccTp

pmFwErrBlocks

Number of forwarded errored blocks.

Data Source

NodeB_RNC_RXI

Source Field

pmFwErrBlocks

Source Section

Aal2PathVccTp_NodeB

pmFwLostCells

Number of forwarded lost cells.

Data Source

NodeB_RNC_RXI

Source Field

pmFwLostCells

Source Section

Aal2PathVccTp_NodeB

pmFwMissinsCells

Number of forwarded misinserted cells.

Data Source

NodeB_RNC_RXI

Source Field

pmFwMissinsCells

Source Section

Aal2PathVccTp_NodeB

pmIngressCpsPackets

Number of AAL2 Common Part Sublayer (CPS) ingress packets received

Data Source

NodeB_RXI

Source Field

pmIngressCpsPackets

Source Section

Aal2PathVccTp

pmLostBrCells

Number of lost bit rate cells.

Data Source

NodeB_RNC_RXI

Source Field

pmLostBrCells

Source Section

Aal2PathVccTp_NodeB

pmLostFpmCells

Number of lost Forward Performance Monitoring (FPM) cells.

Data Source

NodeB_RNC_RXI

Source Field

pmLostFpmCells

Source Section

Aal2PathVccTp_NodeB

Aal2PathVccTp_RNC Primitive Calculations

The following is a list of primitive calculations for the Aal2PathVccTp_RNC entity.

GRAPHmultiLineSeparator

Special Control Field for Multi-Line Graphs

Calculation

```
""
```

NUMDAYS

of days in Report

Calculation

```
DAYSINREPORT()
```

NUMHOURS

of hours in Summation Data

Calculation

Aal2PathVccTp_RNC Peg Counts

The following is a list of peg counts for the Aal2PathVccTp_RNC entity.

PERLENSEC

Period length in seconds

Data Source

NodeB_RNC_RXI

Source Field

perlensec

Source Section

Aal2PathVccTp_RNC_WMGeneral

PERLENSEC_K

Period length in seconds aggregation summation in time domain and aggregation maximum between Network Elements.

Data Source

NodeB_RNC_RXI

Source Field

perlensec

Source Section

Aal2PathVccTp_RNC_WMGeneral

pmBwErrBlocks

Number of backward errored blocks.

Data Source

NodeB_RNC_RXI

Source Field

pmBwErrBlocks

Source Section

Aal2PathVccTp_RNC

pmBwLostCells

Number of backward lost cells.

Data Source

NodeB_RNC_RXI

Source Field

pmBwLostCells

Source Section

Aal2PathVccTp_RNC

pmBwMissinsCells

Number of backward misinserted cells.

Data Source

NodeB_RNC_RXI

Source Field

pmBwMissinsCells

Source Section

Aal2PathVccTp_RNC

pmDiscardedEgressCpsPackets

Number of discarded AAL2 Common Part Sublayer (CPS) packets in egress direction

Data Source

RNC_RXI

Source Field

pmDiscardedEgressCpsPackets

Source Section

Aal2PathVccTp

pmEgressCpsPackets

Number of AAL2 Common Part Sublayer (CPS) egress packets sent

Data Source

RNC_RXI

Source Field

pmEgressCpsPackets

Source Section

Aal2PathVccTp

pmFwErrBlocks

Number of forwarded errored blocks.

Data Source

NodeB_RNC_RXI

Source Field

pmFwErrBlocks

Source Section

Aal2PathVccTp_RNC

pmFwLostCells

Number of forwarded lost cells.

Data Source

NodeB_RNC_RXI

Source Field

pmFwLostCells

Source Section

Aal2PathVccTp_RNC

pmFwMissinsCells

Number of forwarded misinserted cells.

Data Source

NodeB_RNC_RXI

Source Field

pmFwMissinsCells

Source Section

Aal2PathVccTp_RNC

pmIngressCpsPackets

Number of AAL2 Common Part Sublayer (CPS) ingress packets received

Data Source

RNC_RXI

Source Field

pmIngressCpsPackets

Source Section

Aal2PathVccTp

pmLostBrCells

Number of lost bit rate cells.

Data Source

NodeB_RNC_RXI

Source Field

pmLostBrCells

Source Section

Aal2PathVccTp_RNC

pmLostFpmCells

Number of lost Forward Performance Monitoring (FPM) cells.

Data Source

NodeB_RNC_RXI

Source Field

pmLostFpmCells

Source Section

Aal2PathVccTp_RNC

Aal2Sp_NodeB Primitive Calculations

The following is a list of primitive calculations for the Aal2Sp_NodeB entity.

GRAPHmultiLineSeparator

Special Control Field for Multi-Line Graphs

Calculation

""

NUMDAYS

of days in Report

Calculation

```
DAYSINREPORT()
```

NUMHOURS

of hours in Summation Data

Calculation

Aal2Sp_NodeB Peg Counts

The following is a list of peg counts for the Aal2Sp_NodeB entity.

NodeB_RELEASE

Release

Data Source

NodeB_RNC_RXI

Source Section

Aal2Sp_NodeB

PERLENSEC

Period Length

Data Source

NodeB_RNC_RXI

Source Field

perlensec

Source Section

Aal2Sp_NodeB_WMGeneral

PERLENSEC_K

Period length in seconds aggregation summation in time domain and aggregation maximum between Network Elements.

Data Source

NodeB_RNC_RXI

Source Field

perlensec

Source Section

Aal2Sp_NodeB_WMGeneral

pmUnsuccessfulConnsInternal

Number of unSucc attempts to establish connections due to node internal problems.

Data Source

NodeB_RNC_RXI

Source Field

pmUnsuccessfulConnsInternal

Source Section

Aal2Sp_NodeB

Aal2Sp_RNC Primitive Calculations

The following is a list of primitive calculations for the Aal2Sp_RNC entity.

GRAPHmultiLineSeparator

Special Control Field for Multi-Line Graphs

Calculation

```
""
```

NUMDAYS

of days in Report

Calculation

```
DAYSINREPORT()
```

NUMHOURS

of hours in Summation Data

Calculation

Aal2Sp_RNC Peg Counts

The following is a list of peg counts for the Aal2Sp_RNC entity.

PERLENSEC

Period Length

Data Source

NodeB_RNC_RXI

Source Field

perlensec

Source Section

Aal2Sp_RNC_WMGeneral

PERLENSEC_K

Period length in seconds aggregation summation in time domain and aggregation maximum between Network Elements.

Data Source

NodeB_RNC_RXI

Source Field

perlensec

Source Section

Aal2Sp_RNC_WMGeneral

pmUnsuccessfulConnsInternal

Number of unSucc attempts to establish connections due to node internal problems.

Data Source

NodeB_RNC_RXI

Source Field

pmUnsuccessfulConnsInternal

Source Section

Aal2Sp_RNC

RNC_RELEASE

Release

Data Source

NodeB_RNC_RXI

Source Section

Aal2Sp_RNC

Aal5TpVccTp_NodeB Primitive Calculations

The following is a list of primitive calculations for the Aal5TpVccTp_NodeB entity.

GRAPHmultiLineSeparator

Special Control Field for Multi-Line Graphs

Calculation

```
""
```

NUMDAYS

of days in Report

Calculation

```
DAYSINREPORT()
```

NUMHOURS

of hours in Summation Data

Calculation

Aal5TpVccTp_NodeB Peg Counts

The following is a list of peg counts for the Aal5TpVccTp_NodeB entity.

PERLENSEC

Period length in seconds

Data Source

NodeB_RNC_RXI

Source Field

perlensec

Source Section

Aal5TpVccTp_NodeB_WMGeneral

PERLENSEC_K

Period length in seconds aggregation summation in time domain and aggregation maximum between Network Elements.

Data Source

NodeB_RNC_RXI

Source Field

perlensec

Source Section

Aal5TpVccTp_NodeB_WMGeneral

pmBwErrBlocks

Number of backward errored blocks.

Data Source

NodeB_RNC_RXI

Source Field

pmBwErrBlocks

Source Section

Aal5TpVccTp_NodeB

pmBwLostCells

Number of backward lost cells.

Data Source

NodeB_RNC_RXI

Source Field

pmBwLostCells

Source Section

Aal5TpVccTp_NodeB

pmBwMissinsCells

Number of backward misinserted cells.

Data Source

NodeB_RNC_RXI

Source Field

pmBwMissinsCells

Source Section

Aal5TpVccTp_NodeB

pmFwErrBlocks

Number of forwarded errored blocks.

Data Source

NodeB_RNC_RXI

Source Field

pmFwErrBlocks

Source Section

Aal5TpVccTp_NodeB

pmFwLostCells

Number of forwarded lost cells.

Data Source

NodeB_RNC_RXI

Source Field

pmFwLostCells

Source Section

Aal5TpVccTp_NodeB

pmFwMissinsCells

Number of forwarded misinserted cells.

Data Source

NodeB_RNC_RXI

Source Field

pmFwMissinsCells

Source Section

Aal5TpVccTp_NodeB

pmLostBrCells

Number of lost bit rate cells.

Data Source

NodeB_RNC_RXI

Source Field

pmLostBrCells

Source Section

Aal5TpVccTp_NodeB

pmLostFpmCells

Number of lost Forward Performance Monitoring (FPM) cells.

Data Source

NodeB_RNC_RXI

Source Field

pmLostFpmCells

Source Section

Aal5TpVccTp_NodeB

Aal5TpVccTp_RNC Primitive Calculations

The following is a list of primitive calculations for the Aal5TpVccTp_RNC entity.

GRAPHmultiLineSeparator

Special Control Field for Multi-Line Graphs

Calculation

```
""
```

NUMDAYS

of days in Report

Calculation

```
DAYSINREPORT()
```

NUMHOURS

of hours in Summation Data

Calculation

Aal5TpVccTp_RNC Peg Counts

The following is a list of peg counts for the Aal5TpVccTp_RNC entity.

PERLENSEC

Period length in seconds

Data Source

NodeB_RNC_RXI

Source Field

perlensec

Source Section

Aal5TpVccTp_RNC_WMGeneral

PERLENSEC_K

Period length in seconds aggregation summation in time domain and aggregation maximum between Network Elements.

Data Source

NodeB_RNC_RXI

Source Field

perlensec

Source Section

Aal5TpVccTp_RNC_WMGeneral

pmBwErrBlocks

Number of backward errored blocks.

Data Source

NodeB_RNC_RXI

Source Field

pmBwErrBlocks

Source Section

Aal5TpVccTp_RNC

pmBwLostCells

Number of backward lost cells.

Data Source

NodeB_RNC_RXI

Source Field

pmBwLostCells

Source Section

Aal5TpVccTp_RNC

pmBwMissinsCells

Number of backward misinserted cells.

Data Source

NodeB_RNC_RXI

Source Field

pmBwMissinsCells

Source Section

Aal5TpVccTp_RNC

pmFwErrBlocks

Number of forwarded errored blocks.

Data Source

NodeB_RNC_RXI

Source Field

pmFwErrBlocks

Source Section

Aal5TpVccTp_RNC

pmFwLostCells

Number of forwarded lost cells.

Data Source

NodeB_RNC_RXI

Source Field

pmFwLostCells

Source Section

Aal5TpVccTp_RNC

pmFwMissinsCells

Number of forwarded misinserted cells.

Data Source

NodeB_RNC_RXI

Source Field

pmFwMissinsCells

Source Section

Aal5TpVccTp_RNC

pmLostBrCells

Number of lost bit rate cells.

Data Source

NodeB_RNC_RXI

Source Field

pmLostBrCells

Source Section

Aal5TpVccTp_RNC

pmLostFpmCells

Number of lost Forward Performance Monitoring (FPM) cells.

Data Source

NodeB_RNC_RXI

Source Field

pmLostFpmCells

Source Section

Aal5TpVccTp_RNC

Aich Primitive Calculations

The following is a list of primitive calculations for the Aich entity.

GRAPHmultiLineSeparator

Special Control Field for Multi-Line Graphs

Calculation

```
""
```

NUMDAYS

of days in Report

Calculation

```
DAYSINREPORT()
```

NUMHOURS

of hours in Summation Data

Calculation

Aich Peg Counts

The following is a list of peg counts for the Aich entity.

NodeB_RELEASE

Release

Data Source

NodeB_RNC_RXI

Source Section

Aich

PERLENSEC

Period Length

Data Source

NodeB_RNC_RXI

Source Field

perlensec

Source Section

Aich_WMGeneral

PERLENSEC_K

Period length in seconds aggregation summation in time domain and aggregation maximum between Network Elements.

Data Source

NodeB_RNC

Source Field

perlensec

Source Section

Aich_WMGeneral

pmNegativeMessages

Number of negative AI messages sent on AICH

Data Source

NodeB_RNC_RXI

Source Field

pmNegativeMessages

Source Section

Aich

pmPositiveMessages

Number of positive AI messages sent on AICH

Data Source

NodeB_RNC_RXI

Source Field

pmPositiveMessages

Source Section

Aich

AmrService Primitive Calculations

The following is a list of primitive calculations for the AmrService entity.

GRAPHmultiLineSeparator

Special Control Field for Multi-Line Graphs

Calculation

```
""
```

NUMDAYS

of days in Report

Calculation

```
DAYSINREPORT()
```

NUMHOURS

of hours in Summation Data

Calculation

p_Seizures_Sucess_Rate

Percentege of Seizures which are sucessful

Calculation

```
100.0 * vsum( pmTotalSeizures, -1 * pmUnsuccSeizures ) / pmTotalSeizures
```

AmrService Peg Counts

The following is a list of peg counts for the AmrService entity.

PERLENSEC

Period length in seconds

Data Source

RNC_RXI

Source Field

PERLENSEC

Source Section

AmrService_Gen

pmForcedRelease

Total Number of forced device releases for ex due to spontaneous device fault

Data Source

RNC_RXI

Source Field

pmForcedRelease

Source Section

AmrService

pmNormalRelease

Total Number of normal device releases

Data Source

RNC_RXI

Source Field

pmNormalRelease

Source Section

AmrService

pmTotalSeizures

The total number of seizure attempt of devices from this device Service.

Data Source

RNC_RXI

Source Field

pmTotalSeizures

Source Section

AmrService

pmUnsuccSeizures

The total number of failed seizure attempts due to congestion.

Data Source

RNC_RXI

Source Field

pmUnsuccSeizures

Source Section

AmrService

RNC_RELEASE

Release

Data Source

RNC_RXI

Source Field

RNC_RELEASE

Source Section

AmrService_Gen

AntennaBranch Primitive Calculations

The following is a list of primitive calculations for the AntennaBranch entity.

GRAPHmultiLineSeparator

Special Control Field for Multi-Line Graphs

Calculation

""

NUMDAYS

of days in Report

Calculation

```
DAYSINREPORT()
```

NUMHOURS

of hours in Summation Data

Calculation

AntennaBranch Peg Counts

The following is a list of peg counts for the AntennaBranch entity.

NodeB_RELEASE

Release

Data Source

NodeB_RNC_RXI

Source Section

AntennaBranch

PERLENSEC

Period Length

Data Source

NodeB_RNC_RXI

Source Field

perlensec

Source Section

AntennaBranch_WMGeneral

PERLENSEC_K

Period length in seconds aggregation summation in time domain and aggregation maximum between Network Elements.

Data Source

NodeB_RNC

Source Field

perlensec

Source Section

AntennaBranch_WMGeneral

pmNoOfPowLimSlots

The number of power limited slots measured on RFIF in the Antenna branch (by the Mean Power Limiter funct in the RBS)

Data Source

NodeB_RNC_RXI

Source Field

pmNoOfPowLimSlots

Source Section

AntennaBranch

AtmPort_NodeB Primitive Calculations

The following is a list of primitive calculations for the AtmPort_NodeB entity.

Avr_CellRate_Recieved_AtmPort_NodeB

Average Received CellRate in the measurement period.

Calculation

```
pmReceivedAtmCells / PERLENSEC
```

Avr_CellRate_Transmitted_AtmPort_NodeB

Average Transmitted CellRate in the measurement period.

Calculation

```
pmTransmittedAtmCells / PERLENSEC
```

GRAPHmultiLineSeparator

Special Control Field for Multi-Line Graphs

Calculation

```
""
```

Updated: 2009-07-22

NUMDAYS

of days in Report

Calculation

```
DAYSINREPORT()
```

NUMHOURS

of hours in Summation Data

Calculation

AtmPort_NodeB Peg Counts

The following is a list of peg counts for the AtmPort_NodeB entity.

NodeB_RELEASE

Release

Data Source

NodeB_RNC_RXI

Source Section

AtmPort_NodeB

PERLENSEC

Period Length

Data Source

NodeB_RNC_RXI

Source Field

perlensec

Source Section

AtmPort_NodeB_WMGeneral

PERLENSEC_K

Period length in seconds aggregation summation in time domain and aggregation maximum between Network Elements.

Data Source

NodeB_RNC_RXI

Source Field

perlensec

Source Section

AtmPort_NodeB_WMGeneral

pmReceivedAtmCells

Number of received ATM cells through the ATM port.

Data Source

NodeB_RNC_RXI

Source Field

pmReceivedAtmCells

Source Section

AtmPort_NodeB

pmSecondsWithUnexp

Errored sec with discarded cells due to protocol errors unexpected UNEX events

Data Source

NodeB_RNC_RXI

Source Field

pmSecondsWithUnexp

Source Section

AtmPort_NodeB

pmTransmittedAtmCells

Number of transmitted ATM cells through the ATM port.

Data Source

NodeB_RNC_RXI

Source Field

pmTransmittedAtmCells

Source Section

AtmPort_NodeB

AtmPort_RNC Primitive Calculations

The following is a list of primitive calculations for the AtmPort_RNC entity.

Avr_CellRate_Recieved_AtmPort_RNC

Average Received CellRate in the measurement period.

Calculation

```
pmReceivedAtmCells / PERLENSEC
```

Avr_CellRate_Transmitted_AtmPort_RNC

Average Transmitted CellRate in the measurement period.

Calculation

```
pmTransmittedAtmCells / PERLENSEC
```

GRAPHmultiLineSeparator

Special Control Field for Multi-Line Graphs

Calculation

```
""
```

NUMDAYS

of days in Report

Calculation

```
DAYSINREPORT()
```

NUMHOURS

of hours in Summation Data

Calculation

AtmPort_RNC Peg Counts

The following is a list of peg counts for the AtmPort_RNC entity.

PERLENSEC

Period Length

Data Source

NodeB_RNC_RXI

Source Field

perlensec

Source Section

AtmPort_RNC_WMGeneral

PERLENSEC_K

Period length in seconds aggregation summation in time domain and aggregation maximum between Network Elements.

Data Source

NodeB_RNC_RXI

Source Field

perlensec

Source Section

AtmPort_RNC_WMGeneral

pmReceivedAtmCells

Number of received ATM cells through the ATM port.

Data Source

NodeB_RNC_RXI

Source Field

pmReceivedAtmCells

Source Section

AtmPort_RNC

pmSecondsWithUnexp

Errored sec with discarded cells due to protocol errors unexpected UNEX events

Data Source

NodeB_RNC_RXI

Source Field

pmSecondsWithUnexp

Source Section

AtmPort_RNC

pmTransmittedAtmCells

Number of transmitted ATM cells through the ATM port.

Data Source

NodeB_RNC_RXI

Source Field

pmTransmittedAtmCells

Source Section

AtmPort_RNC

RNC_RELEASE

Release

Data Source

NodeB_RNC_RXI

Source Section

AtmPort_RNC

Carrier Primitive Calculations

The following is a list of primitive calculations for the Carrier entity.

GRAPHmultiLineSeparator

Special Control Field for Multi-Line Graphs

Calculation

```
""
```

k_CARR_PWR_DL_AVE

Average carrier downlink transmit power (pmTransmittedCarrierPower)

Calculation

```
vsum(0.0 * pmTXCarPwr_000,0.25 * pmTXCarPwr_001,0.75 * pmTXCarPwr_002,1.25
* pmTXCarPwr_003,1.75 * pmTXCarPwr_004,2.25 * pmTXCarPwr_005,2.75 *
pmTXCarPwr_006,3.25 * pmTXCarPwr_007,3.75 * pmTXCarPwr_008,4.25 *
pmTXCarPwr_009,4.75 * pmTXCarPwr_010,5.25 * pmTXCarPwr_011,5.75 *
pmTXCarPwr_012,6.25 * pmTXCarPwr_013,6.75 * pmTXCarPwr_014,7.25 *
pmTXCarPwr_015,7.75 * pmTXCarPwr_016,8.25 * pmTXCarPwr_017,8.75 *
pmTXCarPwr_018,9.25 * pmTXCarPwr_019,9.75 * pmTXCarPwr_020,10.25 *
pmTXCarPwr_021,10.75 * pmTXCarPwr_022,11.25 * pmTXCarPwr_023,11.75 *
pmTXCarPwr_024,12.25 * pmTXCarPwr_025,12.75 * pmTXCarPwr_026,13.25 *
pmTXCarPwr_027,13.75 * pmTXCarPwr_028,14.25 * pmTXCarPwr_029,14.75 *
pmTXCarPwr_030,15.25 * pmTXCarPwr_031,15.75 * pmTXCarPwr_032,16.25 *
pmTXCarPwr_033,16.75 * pmTXCarPwr_034,17.25 * pmTXCarPwr_035,17.75 *
pmTXCarPwr_036,18.25 * pmTXCarPwr_037,18.75 * pmTXCarPwr_038,19.25 *
pmTXCarPwr_039,19.75 * pmTXCarPwr_040,20.25 * pmTXCarPwr_041,20.75 *
pmTXCarPwr_042,21.25 * pmTXCarPwr_043,21.75 * pmTXCarPwr_044,22.25 *
pmTXCarPwr_045,22.75 * pmTXCarPwr_046,23.25 * pmTXCarPwr_047,23.75 *
pmTXCarPwr_048,24.25 * pmTXCarPwr_049,24.75 * pmTXCarPwr_050,25.25 *
pmTXCarPwr_051,25.75 * pmTXCarPwr_052,26.25 * pmTXCarPwr_053,26.75 *
pmTXCarPwr_054,27.25 * pmTXCarPwr_055,27.75 * pmTXCarPwr_056,28.25 *
pmTXCarPwr_057,28.75 * pmTXCarPwr_058,29.25 * pmTXCarPwr_059,29.75 *
pmTXCarPwr_060,30.25 * pmTXCarPwr_061,30.75 * pmTXCarPwr_062,31.25 *
pmTXCarPwr_063,31.75 * pmTXCarPwr_064,32.25 * pmTXCarPwr_065,32.75 *
pmTXCarPwr_066,33.25 * pmTXCarPwr_067,33.75 * pmTXCarPwr_068,34.25 *
pmTXCarPwr_069,34.75 * pmTXCarPwr_070,35.25 * pmTXCarPwr_071,35.75 *
pmTXCarPwr_072,36.25 * pmTXCarPwr_073,36.75 * pmTXCarPwr_074,37.25 *
pmTXCarPwr_075,37.75 * pmTXCarPwr_076,38.25 * pmTXCarPwr_077,38.75 *
pmTXCarPwr_078,39.25 * pmTXCarPwr_079,39.75 * pmTXCarPwr_080,40.25 *
pmTXCarPwr_081,40.75 * pmTXCarPwr_082,41.25 * pmTXCarPwr_083,41.75 *
pmTXCarPwr_084,42.25 * pmTXCarPwr_085,42.75 * pmTXCarPwr_086,43.25 *
pmTXCarPwr_087,43.75 * pmTXCarPwr_088,44.25 * pmTXCarPwr_089,44.75 *
pmTXCarPwr_090,45.25 * pmTXCarPwr_091,45.75 * pmTXCarPwr_092,46.25 *
pmTXCarPwr_093,46.75 * pmTXCarPwr_094,47.25 * pmTXCarPwr_095,47.75 *
pmTXCarPwr_096,48.25 * pmTXCarPwr_097,48.75 * pmTXCarPwr_098,49.25 *
pmTXCarPwr_099,49.75 * pmTXCarPwr_100,50.25 * pmTXCarPwr_101,50.75 *
pmTXCarPwr_102) /
vsum(pmTXCarPwr_000,pmTXCarPwr_001,pmTXCarPwr_002,pmTXCarPwr_003,pmTXCarPw
r_004,pmTXCarPwr_005,pmTXCarPwr_006,pmTXCarPwr_007,pmTXCarPwr_008,pmTXCarP
wr_009,pmTXCarPwr_010,pmTXCarPwr_011,pmTXCarPwr_012,pmTXCarPwr_013,pmTXCar
Pwr_014,pmTXCarPwr_015,pmTXCarPwr_016,pmTXCarPwr_017,pmTXCarPwr_018,pmTXCa
rPwr_019,pmTXCarPwr_020,pmTXCarPwr_021,pmTXCarPwr_022,pmTXCarPwr_023,pmTXC
arPwr_024,pmTXCarPwr_025,pmTXCarPwr_026,pmTXCarPwr_027,pmTXCarPwr_028,pmTX
CarPwr_029,pmTXCarPwr_030,pmTXCarPwr_031,pmTXCarPwr_032,pmTXCarPwr_033,pmT
```

Updated: 2009-07-22

```
XCarPwr_034,pmTXCarPwr_035,pmTXCarPwr_036,pmTXCarPwr_037,pmTXCarPwr_038,pm
TXCarPwr_039,pmTXCarPwr_040,pmTXCarPwr_041,pmTXCarPwr_042,pmTXCarPwr_043,p
mTXCarPwr_044,pmTXCarPwr_045,pmTXCarPwr_046,pmTXCarPwr_047,pmTXCarPwr_048,
pmTXCarPwr_049,pmTXCarPwr_050,pmTXCarPwr_051,pmTXCarPwr_052,pmTXCarPwr_053
,pmTXCarPwr_054,pmTXCarPwr_055,pmTXCarPwr_056,pmTXCarPwr_057,pmTXCarPwr_05
8,pmTXCarPwr_059,pmTXCarPwr_060,pmTXCarPwr_061,pmTXCarPwr_062,pmTXCarPwr_0
63,pmTXCarPwr_064,pmTXCarPwr_065,pmTXCarPwr_066,pmTXCarPwr_067,pmTXCarPwr_
068,pmTXCarPwr_069,pmTXCarPwr_070,pmTXCarPwr_071,pmTXCarPwr_072,pmTXCarPwr
_073,pmTXCarPwr_074,pmTXCarPwr_075,pmTXCarPwr_076,pmTXCarPwr_077,pmTXCarPw
r_078,pmTXCarPwr_079,pmTXCarPwr_080,pmTXCarPwr_081,pmTXCarPwr_082,pmTXCarP
wr_083,pmTXCarPwr_084,pmTXCarPwr_085,pmTXCarPwr_086,pmTXCarPwr_087,pmTXCar
Pwr_088,pmTXCarPwr_089,pmTXCarPwr_090,pmTXCarPwr_091,pmTXCarPwr_092,pmTXCa
rPwr_093,pmTXCarPwr_094,pmTXCarPwr_095,pmTXCarPwr_096,pmTXCarPwr_097,pmTXC
arPwr_098,pmTXCarPwr_099,pmTXCarPwr_100,pmTXCarPwr_101,pmTXCarPwr_102)
```

NUMDAYS

of days in Report

Calculation

```
DAYSINREPORT()
```

NUMHOURS

of hours in Summation Data

Calculation

pmAverageRssiP5MD_00

The average Received Signal Strength Indication (RSSI). Measured on TR device(s) every 100 ms, and the average value is calculated at the same rate. Number of samples in range < -110.0dBm

Calculation

```
pmAverageRssi_00
```

pmAverageRssiP5MD_01

The average Received Signal Strength Indication (RSSI). Measured on TR device(s) every 100 ms, and the average value is calculated at the same rate. Number of samples in range -110.0..-109.5dBm

Calculation

```
pmAverageRssi_01
```

pmAverageRssiP5MD_02

The average Received Signal Strength Indication (RSSI). Measured on TR device(s) every 100 ms, and the average value is calculated at the same rate. Number of samples in range -109.5..-109.0dBm

Calculation

```
pmAverageRssi_02
```

pmAverageRssiP5MD_03

The average Received Signal Strength Indication (RSSI). Measured on TR device(s) every 100 ms, and the average value is calculated at the same rate. Number of samples in range -109.0..-108.5dBm

Calculation

```
pmAverageRssi_03
```

pmAverageRssiP5MD_04

The average Received Signal Strength Indication (RSSI). Measured on TR device(s) every 100 ms, and the average value is calculated at the same rate. Number of samples in range -108.5..-108.0dBm

Calculation

```
pmAverageRssi_04
```

pmAverageRssiP5MD_05

The average Received Signal Strength Indication (RSSI). Measured on TR device(s) every 100 ms, and the average value is calculated at the same rate. Number of samples in range -108.0..-107.5dBm

Calculation

```
pmAverageRssi_05
```

pmAverageRssiP5MD_06

The average Received Signal Strength Indication (RSSI). Measured on TR device(s) every 100 ms, and the average value is calculated at the same rate. Number of samples in range -107.5..-107.0dBm

Calculation

```
pmAverageRssi_06
```

pmAverageRssiP5MD_07

The average Received Signal Strength Indication (RSSI). Measured on TR device(s) every 100 ms, and the average value is calculated at the same rate. Number of samples in range -107.0..-106.5dBm

Calculation

```
pmAverageRssi_07
```

pmAverageRssiP5MD_08

The average Received Signal Strength Indication (RSSI). Measured on TR device(s) every 100 ms, and the average value is calculated at the same rate. Number of samples in range -106.5..-106.0dBm

Calculation

```
pmAverageRssi_08
```

pmAverageRssiP5MD_09

The average Received Signal Strength Indication (RSSI). Measured on TR device(s) every 100 ms, and the average value is calculated at the same rate. Number of samples in range -106.0..-105.5dBm

Calculation

```
pmAverageRssi_09
```

pmAverageRssiP5MD_10

The average Received Signal Strength Indication (RSSI). Measured on TR device(s) every 100 ms, and the average value is calculated at the same rate. Number of samples in range -105.5..-105.0dBm

Calculation

```
pmAverageRssi_10
```

pmAverageRssiP5MD_11

The average Received Signal Strength Indication (RSSI). Measured on TR device(s) every 100 ms, and the average value is calculated at the same rate. Number of samples in range -105.0..-104.5dBm

Calculation

```
pmAverageRssi_11
```

pmAverageRssiP5MD_12

The average Received Signal Strength Indication (RSSI). Measured on TR device(s) every 100 ms, and the average value is calculated at the same rate. Number of samples in range -104.5..-104.0dBm

Calculation

```
pmAverageRssi_12
```

pmAverageRssiP5MD_13

The average Received Signal Strength Indication (RSSI). Measured on TR device(s) every 100 ms, and the average value is calculated at the same rate. Number of samples in range -104.0..-103.5dBm

Calculation

```
pmAverageRssi_13
```

pmAverageRssiP5MD_14

The average Received Signal Strength Indication (RSSI). Measured on TR device(s) every 100 ms, and the average value is calculated at the same rate. Number of samples in range -103.5..-103.0dBm

Calculation

```
pmAverageRssi_14
```

pmAverageRssiP5MD_15

The average Received Signal Strength Indication (RSSI). Measured on TR device(s) every 100 ms, and the average value is calculated at the same rate. Number of samples in range -103.0..-102.5dBm

Calculation

```
pmAverageRssi_15
```

pmAverageRssiP5MD_16

The average Received Signal Strength Indication (RSSI). Measured on TR device(s) every 100 ms, and the average value is calculated at the same rate. Number of samples in range -102.5..-102.0dBm

Calculation

```
pmAverageRssi_16
```

pmAverageRssiP5MD_17

The average Received Signal Strength Indication (RSSI). Measured on TR device(s) every 100 ms, and the average value is calculated at the same rate. Number of samples in range -102.0..-101.5dBm

Calculation

```
pmAverageRssi_17
```

pmAverageRssiP5MD_18

The average Received Signal Strength Indication (RSSI). Measured on TR device(s) every 100 ms, and the average value is calculated at the same rate. Number of samples in range -101.5..-101.0dBm

Calculation

```
pmAverageRssi_18
```

pmAverageRssiP5MD_19

The average Received Signal Strength Indication (RSSI). Measured on TR device(s) every 100 ms, and the average value is calculated at the same rate. Number of samples in range -101.0..-100.5dBm

Calculation

```
pmAverageRssi_19
```

pmAverageRssiP5MD_20

The average Received Signal Strength Indication (RSSI). Measured on TR device(s) every 100 ms, and the average value is calculated at the same rate. Number of samples in range -100.5..-100.0dBm

Calculation

```
pmAverageRssi_20
```

pmAverageRssiP5MD_21

The average Received Signal Strength Indication (RSSI). Measured on TR device(s) every 100 ms, and the average value is calculated at the same rate. Number of samples in range -100.0..-99.5dBm

Calculation

```
pmAverageRssi_21
```

pmAverageRssiP5MD_22

The average Received Signal Strength Indication (RSSI). Measured on TR device(s) every 100 ms, and the average value is calculated at the same rate. Number of samples in range -99.5..-99.0dBm

Calculation

```
pmAverageRssi_22
```

pmAverageRssiP5MD_23

The average Received Signal Strength Indication (RSSI). Measured on TR device(s) every 100 ms, and the average value is calculated at the same rate. Number of samples in range -99.0..-98.5dBm

Calculation

```
pmAverageRssi_23
```

pmAverageRssiP5MD_24

The average Received Signal Strength Indication (RSSI). Measured on TR device(s) every 100 ms, and the average value is calculated at the same rate. Number of samples in range -98.5..-98.0dBm

Calculation

```
pmAverageRssi_24
```

pmAverageRssiP5MD_25

The average Received Signal Strength Indication (RSSI). Measured on TR device(s) every 100 ms, and the average value is calculated at the same rate. Number of samples in range -98.0..-97.5dBm

Calculation

```
pmAverageRssi_25
```

pmAverageRssiP5MD_26

The average Received Signal Strength Indication (RSSI). Measured on TR device(s) every 100 ms, and the average value is calculated at the same rate. Number of samples in range -97.5..-97.0dBm

Calculation

```
pmAverageRssi_26
```

pmAverageRssiP5MD_27

The average Received Signal Strength Indication (RSSI). Measured on TR device(s) every 100 ms, and the average value is calculated at the same rate. Number of samples in range -97.0..-96.5dBm

Calculation

```
pmAverageRssi_27
```

pmAverageRssiP5MD_28

The average Received Signal Strength Indication (RSSI). Measured on TR device(s) every 100 ms, and the average value is calculated at the same rate. Number of samples in range -96.5..-96.0dBm

Calculation

```
pmAverageRssi_28
```

pmAverageRssiP5MD_29

The average Received Signal Strength Indication (RSSI). Measured on TR device(s) every 100 ms, and the average value is calculated at the same rate. Number of samples in range -96.0..-95.5dBm

Calculation

```
pmAverageRssi_29
```

pmAverageRssiP5MD_30

The average Received Signal Strength Indication (RSSI). Measured on TR device(s) every 100 ms, and the average value is calculated at the same rate. Number of samples in range -95.5..-95.0dBm

Calculation

```
pmAverageRssi_30
```

pmAverageRssiP5MD_31

The average Received Signal Strength Indication (RSSI). Measured on TR device(s) every 100 ms, and the average value is calculated at the same rate. Number of samples in range -95.0..-94.5dBm

Calculation

```
pmAverageRssi_31
```

pmAverageRssiP5MD_32

The average Received Signal Strength Indication (RSSI). Measured on TR device(s) every 100 ms, and the average value is calculated at the same rate. Number of samples in range -94.5..-94.0dBm

Calculation

```
pmAverageRssi_32
```

pmAverageRssiP5MD_33

The average Received Signal Strength Indication (RSSI). Measured on TR device(s) every 100 ms, and the average value is calculated at the same rate. Number of samples in range -94.0..-93.5dBm

Calculation

```
pmAverageRssi_33
```

pmAverageRssiP5MD_34

The average Received Signal Strength Indication (RSSI). Measured on TR device(s) every 100 ms, and the average value is calculated at the same rate. Number of samples in range -93.5..-93.0dBm

Calculation

```
pmAverageRssi_34
```

pmAverageRssiP5MD_35

The average Received Signal Strength Indication (RSSI). Measured on TR device(s) every 100 ms, and the average value is calculated at the same rate. Number of samples in range -93.0..-92.5dBm

Calculation

```
pmAverageRssi_35
```

pmAverageRssiP5MD_36

The average Received Signal Strength Indication (RSSI). Measured on TR device(s) every 100 ms, and the average value is calculated at the same rate. Number of samples in range -92.5..-92.0dBm

Calculation

```
pmAverageRssi_36
```

pmAverageRssiP5MD_37

The average Received Signal Strength Indication (RSSI). Measured on TR device(s) every 100 ms, and the average value is calculated at the same rate. Number of samples in range -92.0..-91.5dBm

Calculation

```
pmAverageRssi_37
```

pmAverageRssiP5MD_38

The average Received Signal Strength Indication (RSSI). Measured on TR device(s) every 100 ms, and the average value is calculated at the same rate. Number of samples in range -91.5..-91.0dBm

Calculation

```
pmAverageRssi_38
```

pmAverageRssiP5MD_39

The average Received Signal Strength Indication (RSSI). Measured on TR device(s) every 100 ms, and the average value is calculated at the same rate. Number of samples in range -91.0..-90.5dBm

Calculation

```
pmAverageRssi_39
```

pmAverageRssiP5MD_40

The average Received Signal Strength Indication (RSSI). Measured on TR device(s) every 100 ms, and the average value is calculated at the same rate. Number of samples in range -90.5..-90.0dBm

Calculation

```
pmAverageRssi_40
```

pmAverageRssiP5MD_41

The average Received Signal Strength Indication (RSSI). Measured on TR device(s) every 100 ms, and the average value is calculated at the same rate. Number of samples in range -90.0..-89.5dBm

Calculation

```
pmAverageRssi_41
```

pmAverageRssiP5MD_42

The average Received Signal Strength Indication (RSSI). Measured on TR device(s) every 100 ms, and the average value is calculated at the same rate. Number of samples in range -89.5..-89.0dBm

Calculation

```
pmAverageRssi_42
```

pmAverageRssiP5MD_43

The average Received Signal Strength Indication (RSSI). Measured on TR device(s) every 100 ms, and the average value is calculated at the same rate. Number of samples in range -89.0..-88.5dBm

Calculation

```
pmAverageRssi_43
```

pmAverageRssiP5MD_44

The average Received Signal Strength Indication (RSSI). Measured on TR device(s) every 100 ms, and the average value is calculated at the same rate. Number of samples in range -88.5..-88.0dBm

Calculation

```
pmAverageRssi_44
```

pmAverageRssiP5MD_45

The average Received Signal Strength Indication (RSSI). Measured on TR device(s) every 100 ms, and the average value is calculated at the same rate. Number of samples in range -88.0..-87.5dBm

Calculation

```
pmAverageRssi_45
```

pmAverageRssiP5MD_46

The average Received Signal Strength Indication (RSSI). Measured on TR device(s) every 100 ms, and the average value is calculated at the same rate. Number of samples in range -87.5..-87.0dBm

Calculation

```
pmAverageRssi_46
```

pmAverageRssiP5MD_47

The average Received Signal Strength Indication (RSSI). Measured on TR device(s) every 100 ms, and the average value is calculated at the same rate. Number of samples in range -87.0..-86.5dBm

Calculation

```
pmAverageRssi_47
```

pmAverageRssiP5MD_48

The average Received Signal Strength Indication (RSSI). Measured on TR device(s) every 100 ms, and the average value is calculated at the same rate. Number of samples in range -86.5..-86.0dBm

Calculation

```
pmAverageRssi_48
```

pmAverageRssiP5MD_49

The average Received Signal Strength Indication (RSSI). Measured on TR device(s) every 100 ms, and the average value is calculated at the same rate. Number of samples in range -86.0..-85.5dBm

Calculation

```
pmAverageRssi_49
```

pmAverageRssiP5MD_50

The average Received Signal Strength Indication (RSSI). Measured on TR device(s) every 100 ms, and the average value is calculated at the same rate. Number of samples in range -85.5..-85.0dBm

Calculation

```
pmAverageRssi_50
```

pmAverageRssiP5MD_51

The average Received Signal Strength Indication (RSSI). Measured on TR device(s) every 100 ms, and the average value is calculated at the same rate. Number of samples in range -85.0..-84.5dBm

Calculation

```
pmAverageRssi_51
```

pmAverageRssiP5MD_52

The average Received Signal Strength Indication (RSSI). Measured on TR device(s) every 100 ms, and the average value is calculated at the same rate. Number of samples in range -84.5..-84.0dBm

Calculation

```
pmAverageRssi_52
```

pmAverageRssiP5MD_53

The average Received Signal Strength Indication (RSSI). Measured on TR device(s) every 100 ms, and the average value is calculated at the same rate. Number of samples in range -84.0..-83.5dBm

Calculation

```
pmAverageRssi_53
```

pmAverageRssiP5MD_54

The average Received Signal Strength Indication (RSSI). Measured on TR device(s) every 100 ms, and the average value is calculated at the same rate. Number of samples in range -83.5..-83.0dBm

Calculation

```
pmAverageRssi_54
```

pmAverageRssiP5MD_55

The average Received Signal Strength Indication (RSSI). Measured on TR device(s) every 100 ms, and the average value is calculated at the same rate. Number of samples in range -83.0..-82.5dBm

Calculation

```
pmAverageRssi_55
```

pmAverageRssiP5MD_56

The average Received Signal Strength Indication (RSSI). Measured on TR device(s) every 100 ms, and the average value is calculated at the same rate. Number of samples in range -82.5..-82.0dBm

Calculation

```
pmAverageRssi_56
```

pmAverageRssiP5MD_57

The average Received Signal Strength Indication (RSSI). Measured on TR device(s) every 100 ms, and the average value is calculated at the same rate. Number of samples in range -82.0..-81.5dBm

Calculation

```
pmAverageRssi_57
```

pmAverageRssiP5MD_58

The average Received Signal Strength Indication (RSSI). Measured on TR device(s) every 100 ms, and the average value is calculated at the same rate. Number of samples in range -81.5..-81.0dBm

Calculation

```
pmAverageRssi_58
```

pmAverageRssiP5MD_59

The average Received Signal Strength Indication (RSSI). Measured on TR device(s) every 100 ms, and the average value is calculated at the same rate. Number of samples in range -81.0..-80.5dBm

Calculation

```
pmAverageRssi_59
```

pmAverageRssiP5MD_60

The average Received Signal Strength Indication (RSSI). Measured on TR device(s) every 100 ms, and the average value is calculated at the same rate. Number of samples in range -80.5..-80.0dBm

Calculation

```
pmAverageRssi_60
```

pmTxCarrierPowerP5MD_02

(Retired in Utran P6)The transmitted carrier power. Measured on the TR device(s) every 100 ms. Number of samples in range 25.5..26dBm

Calculation

```
pmTXCarPwr_052
```

pmTxCarrierPowerP5MD_03

(Retired in Utran P6)The transmitted carrier power. Measured on the TR device(s) every 100 ms. Number of samples in range 26..26.5dBm

Calculation

`pmTXCarPwr_053`

pmTxCarrierPowerP5MD_04

(Retired in Utran P6)The transmitted carrier power. Measured on the TR device(s) every 100 ms. Number of samples in range 26.5..27dBm

Calculation

`pmTXCarPwr_054`

pmTxCarrierPowerP5MD_05

(Retired in Utran P6)The transmitted carrier power. Measured on the TR device(s) every 100 ms. Number of samples in range 27..27.5dBm

Calculation

`pmTXCarPwr_055`

pmTxCarrierPowerP5MD_06

(Retired in Utran P6)The transmitted carrier power. Measured on the TR device(s) every 100 ms. Number of samples in range 27.5..28dBm

Calculation

`pmTXCarPwr_056`

pmTxCarrierPowerP5MD_07

(Retired in Utran P6)The transmitted carrier power. Measured on the TR device(s) every 100 ms. Number of samples in range 28..28.5dBm

Calculation

`pmTXCarPwr_057`

pmTxCarrierPowerP5MD_08

(Retired in Utran P6)The transmitted carrier power. Measured on the TR device(s) every 100 ms. Number of samples in range 28.5..29dBm

Calculation

`pmTXCarPwr_058`

pmTxCarrierPowerP5MD_09

(Retired in Utran P6)The transmitted carrier power. Measured on the TR device(s) every 100 ms. Number of samples in range 29..29.5dBm

Calculation

`pmTXCarPwr_059`

pmTxCarrierPowerP5MD_10

(Retired in Utran P6)The transmitted carrier power. Measured on the TR device(s) every 100 ms. Number of samples in range 29.5..30dBm

Calculation

`pmTXCarPwr_060`

pmTxCarrierPowerP5MD_11

(Retired in Utran P6)The transmitted carrier power. Measured on the TR device(s) every 100 ms. Number of samples in range 30..30.5dBm

Calculation

`pmTXCarPwr_061`

pmTxCarrierPowerP5MD_12

(Retired in Utran P6)The transmitted carrier power. Measured on the TR device(s) every 100 ms. Number of samples in range 30.5..31dBm

Calculation

`pmTXCarPwr_062`

pmTxCarrierPowerP5MD_13

(Retired in Utran P6)The transmitted carrier power. Measured on the TR device(s) every 100 ms. Number of samples in range 31..31.5dBm

Calculation

`pmTXCarPwr_063`

pmTxCarrierPowerP5MD_14

(Retired in Utran P6)The transmitted carrier power. Measured on the TR device(s) every 100 ms. Number of samples in range 31.5..32dBm

Calculation

`pmTXCarPwr_064`

pmTxCarrierPowerP5MD_15

(Retired in Utran P6)The transmitted carrier power. Measured on the TR device(s) every 100 ms. Number of samples in range 32..32.5dBm

Calculation

`pmTXCarPwr_065`

pmTxCarrierPowerP5MD_16

(Retired in Utran P6)The transmitted carrier power. Measured on the TR device(s) every 100 ms. Number of samples in range 32.5..33dBm

Calculation

`pmTXCarPwr_066`

pmTxCarrierPowerP5MD_17

(Retired in Utran P6)The transmitted carrier power. Measured on the TR device(s) every 100 ms. Number of samples in range 33..33.5dBm

Calculation

`pmTXCarPwr_067`

pmTxCarrierPowerP5MD_18

(Retired in Utran P6)The transmitted carrier power. Measured on the TR device(s) every 100 ms. Number of samples in range 33.5..34dBm

Calculation

`pmTXCarPwr_068`

pmTxCarrierPowerP5MD_19

(Retired in Utran P6)The transmitted carrier power. Measured on the TR device(s) every 100 ms. Number of samples in range 34..34.5dBm

Calculation

`pmTXCarPwr_069`

pmTxCarrierPowerP5MD_20

(Retired in Utran P6)The transmitted carrier power. Measured on the TR device(s) every 100 ms. Number of samples in range 34.5..35dBm

Calculation

`pmTXCarPwr_070`

pmTxCarrierPowerP5MD_21

(Retired in Utran P6)The transmitted carrier power. Measured on the TR device(s) every 100 ms. Number of samples in range 35..35.5dBm

Calculation

`pmTXCarPwr_071`

pmTxCarrierPowerP5MD_22

(Retired in Utran P6)The transmitted carrier power. Measured on the TR device(s) every 100 ms. Number of samples in range 35.5..36dBm

Calculation

`pmTXCarPwr_072`

pmTxCarrierPowerP5MD_23

(Retired in Utran P6)The transmitted carrier power. Measured on the TR device(s) every 100 ms. Number of samples in range 36..36.5dBm

Calculation

`pmTXCarPwr_073`

pmTxCarrierPowerP5MD_24

(Retired in Utran P6)The transmitted carrier power. Measured on the TR device(s) every 100 ms. Number of samples in range 36.5..37dBm

Calculation

`pmTXCarPwr_074`

pmTxCarrierPowerP5MD_25

(Retired in Utran P6)The transmitted carrier power. Measured on the TR device(s) every 100 ms. Number of samples in range 37..37.5dBm

Calculation

`pmTXCarPwr_075`

pmTxCarrierPowerP5MD_26

(Retired in Utran P6)The transmitted carrier power. Measured on the TR device(s) every 100 ms. Number of samples in range 37.5..38dBm

Calculation

`pmTXCarPwr_076`

pmTxCarrierPowerP5MD_27

(Retired in Utran P6)The transmitted carrier power. Measured on the TR device(s) every 100 ms. Number of samples in range 38..38.5dBm

Calculation

`pmTXCarPwr_077`

pmTxCarrierPowerP5MD_28

(Retired in Utran P6)The transmitted carrier power. Measured on the TR device(s) every 100 ms. Number of samples in range 38.5..39dBm

Calculation

`pmTXCarPwr_078`

pmTxCarrierPowerP5MD_29

(Retired in Utran P6)The transmitted carrier power. Measured on the TR device(s) every 100 ms. Number of samples in range 39..39.5dBm

Calculation

`pmTXCarPwr_079`

pmTxCarrierPowerP5MD_30

(Retired in Utran P6)The transmitted carrier power. Measured on the TR device(s) every 100 ms. Number of samples in range 39.5..40dBm

Calculation

`pmTXCarPwr_080`

pmTxCarrierPowerP5MD_31

(Retired in Utran P6)The transmitted carrier power. Measured on the TR device(s) every 100 ms. Number of samples in range 40..40.5dBm

Calculation

`pmTXCarPwr_081`

pmTxCarrierPowerP5MD_32

(Retired in Utran P6)The transmitted carrier power. Measured on the TR device(s) every 100 ms. Number of samples in range 40.5..41dBm

Calculation

`pmTXCarPwr_082`

pmTxCarrierPowerP5MD_33

(Retired in Utran P6)The transmitted carrier power. Measured on the TR device(s) every 100 ms. Number of samples in range 41..41.5dBm

Calculation

`pmTXCarPwr_083`

pmTxCarrierPowerP5MD_34

(Retired in Utran P6)The transmitted carrier power. Measured on the TR device(s) every 100 ms. Number of samples in range 41.5..42dBm

Calculation

`pmTXCarPwr_084`

pmTxCarrierPowerP5MD_35

(Retired in Utran P6)The transmitted carrier power. Measured on the TR device(s) every 100 ms. Number of samples in range 42..42.5dBm

Calculation

`pmTXCarPwr_085`

pmTxCarrierPowerP5MD_36

(Retired in Utran P6)The transmitted carrier power. Measured on the TR device(s) every 100 ms. Number of samples in range 42.5..43dBm

Calculation

`pmTXCarPwr_086`

pmTxCarrierPowerP5MD_37

(Retired in Utran P6)The transmitted carrier power. Measured on the TR device(s) every 100 ms. Number of samples in range 43..43.5dBm

Calculation

`pmTXCarPwr_087`

pmTxCarrierPowerP5MD_38

(Retired in Utran P6)The transmitted carrier power. Measured on the TR device(s) every 100 ms. Number of samples in range 43.5..44dBm

Calculation

`pmTXCarPwr_088`

pmTxCarrierPowerP5MD_39

(Retired in Utran P6)The transmitted carrier power. Measured on the TR device(s) every 100 ms. Number of samples in range 44..44.5dBm

Calculation

`pmTXCarPwr_089`

pmTxCarrierPowerP5MD_40

(Retired in Utran P6)The transmitted carrier power. Measured on the TR device(s) every 100 ms. Number of samples in range 44.5..45dBm

Calculation

`pmTXCarPwr_090`

pmTxCarrierPowerP5MD_41

(Retired in Utran P6)The transmitted carrier power. Measured on the TR device(s) every 100 ms. Number of samples in range 45..45.5dBm

Calculation

`pmTXCarPwr_091`

pmTxCarrierPowerP5MD_42

(Retired in Utran P6)The transmitted carrier power. Measured on the TR device(s) every 100 ms. Number of samples in range 45.5..46dBm

Calculation

`pmTXCarPwr_092`

pmTxCarrierPowerP5MD_43

(Retired in Utran P6)The transmitted carrier power. Measured on the TR device(s) every 100 ms. Number of samples in range 46..46.5dBm

Calculation

`pmTXCarPwr_093`

pmTxCarrierPowerP5MD_44

(Retired in Utran P6)The transmitted carrier power. Measured on the TR device(s) every 100 ms. Number of samples in range 46.5..47dBm

Calculation

`pmTXCarPwr_094`

pmTxCarrierPowerP5MD_45

(Retired in Utran P6)The transmitted carrier power. Measured on the TR device(s) every 100 ms. Number of samples in range 47..47.5dBm

Calculation

`pmTXCarPwr_095`

pmTxCarrierPowerP5MD_46

(Retired in Utran P6)The transmitted carrier power. Measured on the TR device(s) every 100 ms. Number of samples in range 47.5..48dBm

Calculation

`pmTXCarPwr_096`

pmTxCarrierPowerP5MD_47

(Retired in Utran P6)The transmitted carrier power. Measured on the TR device(s) every 100 ms. Number of samples in range 48..48.5dBm

Calculation

`pmTXCarPwr_097`

pmTxCarrierPowerP5MD_48

(Retired in Utran P6)The transmitted carrier power. Measured on the TR device(s) every 100 ms. Number of samples in range 48.5..49dBm

Calculation

`pmTXCarPwr_098`

pmTxCarrierPowerP5MD_49

(Retired in Utran P6)The transmitted carrier power. Measured on the TR device(s) every 100 ms. Number of samples in range 49..49.5dBm

Calculation

`pmTXCarPwr_099`

pmTxCarrierPowerP5MD_50

(Retired in Utran P6)The transmitted carrier power. Measured on the TR device(s) every 100 ms. Number of samples in range 49.5..50dBm

Calculation

`pmTXCarPwr_100`

Carrier Peg Counts

The following is a list of peg counts for the Carrier entity.

NodeB_nesw

NodeB NE Software Version

Data Source

NodeB

Source Field

nesw

NodeB_RELEASE

Release

Data Source

NodeB_RNC_RXI

Source Section

CellCarrier,Carrier

PERLENSEC

Period Length

Data Source

NodeB_RNC_RXI

Source Field

perlensec

Source Section

Carrier_WMGeneral

PERLENSEC_K

Period length in seconds aggregation summation in time domain and aggregation maximum between Network Elements.

Data Source

NodeB_RNC

Source Field

perlensec

Source Section

Carrier_WMGeneral

pmAverageRssi_00

Number of samples with Received Signal Strength (RSSI) <-110 dBm

Data Source

NodeB_RNC_RXI

Source Field

pmAverageRssi

Source Section

CellCarrier,Carrier

pmAverageRssi_01

Number of samples with Received Signal Strength (RSSI) -110..-109.5 dBm

Data Source

NodeB_RNC_RXI

Source Field

pmAverageRssi

Source Section

CellCarrier,Carrier

pmAverageRssi_02

Number of samples with Received Signal Strength (RSSI) -109.5..-109 dBm

Data Source

NodeB_RNC_RXI

Source Field

pmAverageRssi

Source Section

CellCarrier,Carrier

pmAverageRssi_03

Number of samples with Received Signal Strength (RSSI) -109..-108.5 dBm

Data Source

NodeB_RNC_RXI

Source Field

pmAverageRssi

Source Section

CellCarrier,Carrier

pmAverageRssi_04

Number of samples with Received Signal Strength (RSSI) -108.5..-108 dBm

Data Source

NodeB_RNC_RXI

Source Field

pmAverageRssi

Source Section

CellCarrier,Carrier

pmAverageRssi_05

Number of samples with Received Signal Strength (RSSI) -108..-107.5 dBm

Data Source

NodeB_RNC_RXI

Source Field

pmAverageRssi

Source Section

CellCarrier,Carrier

pmAverageRssi_06

Number of samples with Received Signal Strength (RSSI) -107.5..-107 dBm

Data Source

NodeB_RNC_RXI

Source Field

pmAverageRssi

Source Section

CellCarrier,Carrier

pmAverageRssi_07

Number of samples with Received Signal Strength (RSSI) -107..-106.5 dBm

Data Source

NodeB_RNC_RXI

Source Field

pmAverageRssi

Source Section

CellCarrier,Carrier

pmAverageRssi_08

Number of samples with Received Signal Strength (RSSI) -106.5..-106 dBm

Data Source

NodeB_RNC_RXI

Source Field

pmAverageRssi

Source Section

CellCarrier,Carrier

pmAverageRssi_09

Number of samples with Received Signal Strength (RSSI) -106..-105.5 dBm

Data Source

NodeB_RNC_RXI

Source Field

pmAverageRssi

Source Section

CellCarrier,Carrier

pmAverageRssi_10

Number of samples with Received Signal Strength (RSSI) -105.5..-105 dBm

Data Source

NodeB_RNC_RXI

Source Field

pmAverageRssi

Source Section

CellCarrier,Carrier

pmAverageRssi_11

Number of samples with Received Signal Strength (RSSI) -105..-104.5 dBm

Data Source

NodeB_RNC_RXI

Source Field

pmAverageRssi

Source Section

CellCarrier,Carrier

pmAverageRssi_12

Number of samples with Received Signal Strength (RSSI) -104.5..-104 dBm

Data Source

NodeB_RNC_RXI

Source Field

pmAverageRssi

Source Section

CellCarrier,Carrier

pmAverageRssi_13

Number of samples with Received Signal Strength (RSSI) -104..-103.5 dBm

Data Source

NodeB_RNC_RXI

Source Field

pmAverageRssi

Source Section

CellCarrier,Carrier

pmAverageRssi_14

Number of samples with Received Signal Strength (RSSI) -103.5..-103 dBm

Data Source

NodeB_RNC_RXI

Source Field

pmAverageRssi

Source Section

CellCarrier,Carrier

pmAverageRssi_15

Number of samples with Received Signal Strength (RSSI) -103..-102.5 dBm

Data Source

NodeB_RNC_RXI

Source Field

pmAverageRssi

Source Section

CellCarrier,Carrier

pmAverageRssi_16

Number of samples with Received Signal Strength (RSSI) -102.5..-102 dBm

Data Source

NodeB_RNC_RXI

Source Field

pmAverageRssi

Source Section

CellCarrier,Carrier

pmAverageRssi_17

Number of samples with Received Signal Strength (RSSI) -102..-101.5 dBm

Data Source

NodeB_RNC_RXI

Source Field

pmAverageRssi

Source Section

CellCarrier,Carrier

pmAverageRssi_18

Number of samples with Received Signal Strength (RSSI) -101.5..-101 dBm

Data Source

NodeB_RNC_RXI

Source Field

pmAverageRssi

Source Section

CellCarrier,Carrier

pmAverageRssi_19

Number of samples with Received Signal Strength (RSSI) -101..-100.5 dBm

Data Source

NodeB_RNC_RXI

Source Field

pmAverageRssi

Source Section

CellCarrier,Carrier

pmAverageRssi_20

Number of samples with Received Signal Strength (RSSI) -100.5..-100 dBm

Data Source

NodeB_RNC_RXI

Source Field

pmAverageRssi

Source Section

CellCarrier,Carrier

pmAverageRssi_21

Number of samples with Received Signal Strength (RSSI) -100..-99.5 dBm

Data Source

NodeB_RNC_RXI

Source Field

pmAverageRssi

Source Section

CellCarrier,Carrier

pmAverageRssi_22

Number of samples with Received Signal Strength (RSSI) -99.5..-99 dBm

Data Source

NodeB_RNC_RXI

Source Field

pmAverageRssi

Source Section

CellCarrier,Carrier

pmAverageRssi_23

Number of samples with Received Signal Strength (RSSI) -99..-98.5 dBm

Data Source

NodeB_RNC_RXI

Source Field

pmAverageRssi

Source Section

CellCarrier,Carrier

pmAverageRssi_24

Number of samples with Received Signal Strength (RSSI) -98.5..-98 dBm

Data Source

NodeB_RNC_RXI

Source Field

pmAverageRssi

Source Section

CellCarrier,Carrier

pmAverageRssi_25

Number of samples with Received Signal Strength (RSSI) -98..-97.5 dBm

Data Source

NodeB_RNC_RXI

Source Field

pmAverageRssi

Source Section

CellCarrier,Carrier

pmAverageRssi_26

Number of samples with Received Signal Strength (RSSI) -97.5..-97 dBm

Data Source

NodeB_RNC_RXI

Source Field

pmAverageRssi

Source Section

CellCarrier,Carrier

pmAverageRssi_27

Number of samples with Received Signal Strength (RSSI) -97..-96.5 dBm

Data Source

NodeB_RNC_RXI

Source Field

pmAverageRssi

Source Section

CellCarrier,Carrier

pmAverageRssi_28

Number of samples with Received Signal Strength (RSSI) -96.5..-96 dBm

Data Source

NodeB_RNC_RXI

Source Field

pmAverageRssi

Source Section

CellCarrier,Carrier

pmAverageRssi_29

Number of samples with Received Signal Strength (RSSI) -96..-95.5 dBm

Data Source

NodeB_RNC_RXI

Source Field

pmAverageRssi

Source Section

CellCarrier,Carrier

pmAverageRssi_30

Number of samples with Received Signal Strength (RSSI) -95.5..-95 dBm

Data Source

NodeB_RNC_RXI

Source Field

pmAverageRssi

Source Section

CellCarrier,Carrier

pmAverageRssi_31

Number of samples with Received Signal Strength (RSSI) -95..-94.5 dBm

Data Source

NodeB_RNC_RXI

Source Field

pmAverageRssi

Source Section

CellCarrier,Carrier

pmAverageRssi_32

Number of samples with Received Signal Strength (RSSI) -94.5..-94 dBm

Data Source

NodeB_RNC_RXI

Source Field

pmAverageRssi

Source Section

CellCarrier,Carrier

pmAverageRssi_33

Number of samples with Received Signal Strength (RSSI) -94..-93.5 dBm

Data Source

NodeB_RNC_RXI

Source Field

pmAverageRssi

Source Section

CellCarrier,Carrier

pmAverageRssi_34

Number of samples with Received Signal Strength (RSSI) -93.5..-93 dBm

Data Source

NodeB_RNC_RXI

Source Field

pmAverageRssi

Source Section

CellCarrier,Carrier

pmAverageRssi_35

Number of samples with Received Signal Strength (RSSI) -93..-92.5 dBm

Data Source

NodeB_RNC_RXI

Source Field

pmAverageRssi

Source Section

CellCarrier,Carrier

pmAverageRssi_36

Number of samples with Received Signal Strength (RSSI) -92.5..-92 dBm

Data Source

NodeB_RNC_RXI

Source Field

pmAverageRssi

Source Section

CellCarrier,Carrier

pmAverageRssi_37

Number of samples with Received Signal Strength (RSSI) -92..-91.5 dBm

Data Source

NodeB_RNC_RXI

Source Field

pmAverageRssi

Source Section

CellCarrier,Carrier

pmAverageRssi_38

Number of samples with Received Signal Strength (RSSI) -91.5..-91 dBm

Data Source

NodeB_RNC_RXI

Source Field

pmAverageRssi

Source Section

CellCarrier,Carrier

pmAverageRssi_39

Number of samples with Received Signal Strength (RSSI) -91..-90.5 dBm

Data Source

NodeB_RNC_RXI

Source Field

pmAverageRssi

Source Section

CellCarrier,Carrier

pmAverageRssi_40

Number of samples with Received Signal Strength (RSSI) -90.5..-90 dBm

Data Source

NodeB_RNC_RXI

Source Field

pmAverageRssi

Source Section

CellCarrier,Carrier

pmAverageRssi_41

Number of samples with Received Signal Strength (RSSI) -90..-89.5 dBm

Data Source

NodeB_RNC_RXI

Source Field

pmAverageRssi

Source Section

CellCarrier,Carrier

pmAverageRssi_42

Number of samples with Received Signal Strength (RSSI) -89.5..-89 dBm

Data Source

NodeB_RNC_RXI

Source Field

pmAverageRssi

Source Section

CellCarrier,Carrier

pmAverageRssi_43

Number of samples with Received Signal Strength (RSSI) -89..-88.5 dBm

Data Source

NodeB_RNC_RXI

Source Field

pmAverageRssi

Source Section

CellCarrier,Carrier

pmAverageRssi_44

Number of samples with Received Signal Strength (RSSI) -88.5..-88 dBm

Data Source

NodeB_RNC_RXI

Source Field

pmAverageRssi

Source Section

CellCarrier,Carrier

pmAverageRssi_45

Number of samples with Received Signal Strength (RSSI) -88..-87.5 dBm

Data Source

NodeB_RNC_RXI

Source Field

pmAverageRssi

Source Section

CellCarrier,Carrier

pmAverageRssi_46

Number of samples with Received Signal Strength (RSSI) -87.5..-87 dBm

Data Source

NodeB_RNC_RXI

Source Field

pmAverageRssi

Source Section

CellCarrier,Carrier

pmAverageRssi_47

Number of samples with Received Signal Strength (RSSI) -87..-86.5 dBm

Data Source

NodeB_RNC_RXI

Source Field

pmAverageRssi

Source Section

CellCarrier,Carrier

pmAverageRssi_48

Number of samples with Received Signal Strength (RSSI) -86.5..-86 dBm

Data Source

NodeB_RNC_RXI

Source Field

pmAverageRssi

Source Section

CellCarrier,Carrier

pmAverageRssi_49

Number of samples with Received Signal Strength (RSSI) -86..-85.5 dBm

Data Source

NodeB_RNC_RXI

Source Field

pmAverageRssi

Source Section

CellCarrier,Carrier

pmAverageRssi_50

Number of samples with Received Signal Strength (RSSI) -85.5..-85 dBm

Data Source

NodeB_RNC_RXI

Source Field

pmAverageRssi

Source Section

CellCarrier,Carrier

pmAverageRssi_51

Number of samples with Received Signal Strength (RSSI) -85..-84.5 dBm

Data Source

NodeB_RNC_RXI

Source Field

pmAverageRssi

Source Section

CellCarrier,Carrier

pmAverageRssi_52

Number of samples with Received Signal Strength (RSSI) -84.5..-84 dBm

Data Source

NodeB_RNC_RXI

Source Field

pmAverageRssi

Source Section

CellCarrier,Carrier

pmAverageRssi_53

Number of samples with Received Signal Strength (RSSI) -84..-83.5 dBm

Data Source

NodeB_RNC_RXI

Source Field

pmAverageRssi

Source Section

CellCarrier,Carrier

pmAverageRssi_54

Number of samples with Received Signal Strength (RSSI) -83.5..-83 dBm

Data Source

NodeB_RNC_RXI

Source Field

pmAverageRssi

Source Section

CellCarrier,Carrier

pmAverageRssi_55

Number of samples with Received Signal Strength (RSSI) -83..-82.5 dBm

Data Source

NodeB_RNC_RXI

Source Field

pmAverageRssi

Source Section

CellCarrier,Carrier

pmAverageRssi_56

Number of samples with Received Signal Strength (RSSI) -82.5..-82 dBm

Data Source

NodeB_RNC_RXI

Source Field

pmAverageRssi

Source Section

CellCarrier,Carrier

pmAverageRssi_57

Number of samples with Received Signal Strength (RSSI) -82..-81.5 dBm

Data Source

NodeB_RNC_RXI

Source Field

pmAverageRssi

Source Section

CellCarrier,Carrier

pmAverageRssi_58

Number of samples with Received Signal Strength (RSSI) -81.5..-81 dBm

Data Source

NodeB_RNC_RXI

Source Field

pmAverageRssi

Source Section

CellCarrier,Carrier

pmAverageRssi_59

Number of samples with Received Signal Strength (RSSI) -81..-80.5 dBm

Data Source

NodeB_RNC_RXI

Source Field

pmAverageRssi

Source Section

CellCarrier,Carrier

pmAverageRssi_60

Number of samples with Received Signal Strength (RSSI) -80.5..-80 dBm

Data Source

NodeB_RNC_RXI

Source Field

pmAverageRssi

Source Section

CellCarrier,Carrier

pmAverageRssi_61

Number of samples with Received Signal Strength (RSSI) >= -80 dBm

Data Source

NodeB_RNC_RXI

Source Field

pmAverageRssi

Source Section

CellCarrier,Carrier

pmAverageRssiP5MD_61

The average Received Signal Strength Indication (RSSI). Measured on TR device(s) every 100 ms, and the average value is calculated at the same rate. Number of samples in range -80.0..-75.0dBm

Data Source

NodeB

Source Field

pmAverageRssi

Source Section

Carrier

pmAverageRssiP5MD_62

The average Received Signal Strength Indication (RSSI). Measured on TR device(s) every 100 ms, and the average value is calculated at the same rate. Number of samples in range -75.0..-70.0dBm

Data Source

NodeB

Source Field

pmAverageRssi

Source Section

Carrier

pmAverageRssiP5MD_63

The average Received Signal Strength Indication (RSSI). Measured on TR device(s) every 100 ms, and the average value is calculated at the same rate. Number of samples in range -70.0..-65.0dBm

Data Source

NodeB

Source Field

pmAverageRssi

Source Section

Carrier

pmAverageRssiP5MD_64

The average Received Signal Strength Indication (RSSI). Measured on TR device(s) every 100 ms, and the average value is calculated at the same rate. Number of samples in range >= -65.0dBm

Data Source

NodeB

Source Field

pmAverageRssi

Source Section

Carrier

pmTransmittedCarrierPowerP6_00

The transmitted carrier power. Measured on the TR device(s) every 100 ms. Number of samples in range <0 dBm

Data Source

NodeB

Source Field

pmTransmittedCarrierPower

Source Section

Carrier

pmTransmittedCarrierPowerP6_01

The transmitted carrier power. Measured on the TR device(s) every 100 ms. Number of samples in range 0..1 dBm

Data Source

NodeB

Source Field

pmTransmittedCarrierPower

Source Section

Carrier

pmTransmittedCarrierPowerP6_02

The transmitted carrier power. Measured on the TR device(s) every 100 ms. Number of samples in range 1..2 dBm

Data Source

NodeB

Source Field

pmTransmittedCarrierPower

Source Section

Carrier

pmTransmittedCarrierPowerP6_03

The transmitted carrier power. Measured on the TR device(s) every 100 ms. Number of samples in range 2..3 dBm

Data Source

NodeB

Source Field

pmTransmittedCarrierPower

Source Section

Carrier

pmTransmittedCarrierPowerP6_04

The transmitted carrier power. Measured on the TR device(s) every 100 ms. Number of samples in range 3..4 dBm

Data Source

NodeB

Source Field

pmTransmittedCarrierPower

Source Section

Carrier

pmTransmittedCarrierPowerP6_05

The transmitted carrier power. Measured on the TR device(s) every 100 ms. Number of samples in range 4..5 dBm

Data Source

NodeB

Source Field

pmTransmittedCarrierPower

Source Section

Carrier

pmTransmittedCarrierPowerP6_06

The transmitted carrier power. Measured on the TR device(s) every 100 ms. Number of samples in range 5..6 dBm

Data Source

NodeB

Source Field

pmTransmittedCarrierPower

Source Section

Carrier

pmTransmittedCarrierPowerP6_07

The transmitted carrier power. Measured on the TR device(s) every 100 ms. Number of samples in range 6..7 dBm

Data Source

NodeB

Source Field

pmTransmittedCarrierPower

Source Section

Carrier

pmTransmittedCarrierPowerP6_08

The transmitted carrier power. Measured on the TR device(s) every 100 ms. Number of samples in range 7..8 dBm

Data Source

NodeB

Source Field

pmTransmittedCarrierPower

Source Section

Carrier

pmTransmittedCarrierPowerP6_09

The transmitted carrier power. Measured on the TR device(s) every 100 ms. Number of samples in range 8..9 dBm

Data Source

NodeB

Source Field

pmTransmittedCarrierPower

Source Section

Carrier

pmTransmittedCarrierPowerP6_10

The transmitted carrier power. Measured on the TR device(s) every 100 ms. Number of samples in range 9..10 dBm

Data Source

NodeB

Source Field

pmTransmittedCarrierPower

Source Section

Carrier

pmTransmittedCarrierPowerP6_11

The transmitted carrier power. Measured on the TR device(s) every 100 ms. Number of samples in range 10..11 dBm

Data Source

NodeB

Source Field

pmTransmittedCarrierPower

Source Section

Carrier

pmTransmittedCarrierPowerP6_12

The transmitted carrier power. Measured on the TR device(s) every 100 ms. Number of samples in range 11..12 dBm

Data Source

NodeB

Source Field

pmTransmittedCarrierPower

Source Section

Carrier

pmTransmittedCarrierPowerP6_13

The transmitted carrier power. Measured on the TR device(s) every 100 ms. Number of samples in range 12..13 dBm

Data Source

NodeB

Source Field

pmTransmittedCarrierPower

Source Section

Carrier

pmTransmittedCarrierPowerP6_14

The transmitted carrier power. Measured on the TR device(s) every 100 ms. Number of samples in range 13..14 dBm

Data Source

NodeB

Source Field

pmTransmittedCarrierPower

Source Section

Carrier

pmTransmittedCarrierPowerP6_15

The transmitted carrier power. Measured on the TR device(s) every 100 ms. Number of samples in range 14..15 dBm

Data Source

NodeB

Source Field

pmTransmittedCarrierPower

Source Section

Carrier

pmTransmittedCarrierPowerP6_16

The transmitted carrier power. Measured on the TR device(s) every 100 ms. Number of samples in range 15..16 dBm

Data Source

NodeB

Source Field

pmTransmittedCarrierPower

Source Section

Carrier

pmTransmittedCarrierPowerP6_17

The transmitted carrier power. Measured on the TR device(s) every 100 ms. Number of samples in range 16..17 dBm

Data Source

NodeB

Source Field

pmTransmittedCarrierPower

Source Section

Carrier

pmTransmittedCarrierPowerP6_18

The transmitted carrier power. Measured on the TR device(s) every 100 ms. Number of samples in range 17..18 dBm

Data Source

NodeB

Source Field

pmTransmittedCarrierPower

Source Section

Carrier

pmTransmittedCarrierPowerP6_19

The transmitted carrier power. Measured on the TR device(s) every 100 ms. Number of samples in range 18..19 dBm

Data Source

NodeB

Source Field

pmTransmittedCarrierPower

Source Section

Carrier

pmTransmittedCarrierPowerP6_20

The transmitted carrier power. Measured on the TR device(s) every 100 ms. Number of samples in range 19..20 dBm

Data Source

NodeB

Source Field

pmTransmittedCarrierPower

Source Section

Carrier

pmTransmittedCarrierPowerP6_21

The transmitted carrier power. Measured on the TR device(s) every 100 ms. Number of samples in range 20..21 dBm

Data Source

NodeB

Source Field

pmTransmittedCarrierPower

Source Section

Carrier

pmTransmittedCarrierPowerP6_22

The transmitted carrier power. Measured on the TR device(s) every 100 ms. Number of samples in range 21..22 dBm

Data Source

NodeB

Source Field

pmTransmittedCarrierPower

Source Section

Carrier

pmTransmittedCarrierPowerP6_23

The transmitted carrier power. Measured on the TR device(s) every 100 ms. Number of samples in range 22..23 dBm

Data Source

NodeB

Source Field

pmTransmittedCarrierPower

Source Section

Carrier

pmTransmittedCarrierPowerP6_24

The transmitted carrier power. Measured on the TR device(s) every 100 ms. Number of samples in range 23..24 dBm

Data Source

NodeB

Source Field

pmTransmittedCarrierPower

Source Section

Carrier

pmTransmittedCarrierPowerP6_25

The transmitted carrier power. Measured on the TR device(s) every 100 ms. Number of samples in range 24..25 dBm

Data Source

NodeB

Source Field

pmTransmittedCarrierPower

Source Section

Carrier

pmTransmittedCarrierPowerP6_26

The transmitted carrier power. Measured on the TR device(s) every 100 ms. Number of samples in range 25..26 dBm

Data Source

NodeB

Source Field

pmTransmittedCarrierPower

Source Section

Carrier

pmTransmittedCarrierPowerP6_27

The transmitted carrier power. Measured on the TR device(s) every 100 ms. Number of samples in range 26..27 dBm

Data Source

NodeB

Source Field

pmTransmittedCarrierPower

Source Section

Carrier

pmTransmittedCarrierPowerP6_28

The transmitted carrier power. Measured on the TR device(s) every 100 ms. Number of samples in range 27..28 dBm

Data Source

NodeB

Source Field

pmTransmittedCarrierPower

Source Section

Carrier

pmTransmittedCarrierPowerP6_29

The transmitted carrier power. Measured on the TR device(s) every 100 ms. Number of samples in range 28..29 dBm

Data Source

NodeB

Source Field

pmTransmittedCarrierPower

Source Section

Carrier

pmTransmittedCarrierPowerP6_30

The transmitted carrier power. Measured on the TR device(s) every 100 ms. Number of samples in range 29..30 dBm

Data Source

NodeB

Source Field

pmTransmittedCarrierPower

Source Section

Carrier

pmTransmittedCarrierPowerP6_31

The transmitted carrier power. Measured on the TR device(s) every 100 ms. Number of samples in range 30..31 dBm

Data Source

NodeB

Source Field

pmTransmittedCarrierPower

Source Section

Carrier

pmTransmittedCarrierPowerP6_32

The transmitted carrier power. Measured on the TR device(s) every 100 ms. Number of samples in range 31..32 dBm

Data Source

NodeB

Source Field

pmTransmittedCarrierPower

Source Section

Carrier

pmTransmittedCarrierPowerP6_33

The transmitted carrier power. Measured on the TR device(s) every 100 ms. Number of samples in range 32..33 dBm

Data Source

NodeB

Source Field

pmTransmittedCarrierPower

Source Section

Carrier

pmTransmittedCarrierPowerP6_34

The transmitted carrier power. Measured on the TR device(s) every 100 ms. Number of samples in range 33..34 dBm

Data Source

NodeB

Source Field

pmTransmittedCarrierPower

Source Section

Carrier

pmTransmittedCarrierPowerP6_35

The transmitted carrier power. Measured on the TR device(s) every 100 ms. Number of samples in range 34..35 dBm

Data Source

NodeB

Source Field

pmTransmittedCarrierPower

Source Section

Carrier

pmTransmittedCarrierPowerP6_36

The transmitted carrier power. Measured on the TR device(s) every 100 ms. Number of samples in range 35..36 dBm

Data Source

NodeB

Source Field

pmTransmittedCarrierPower

Source Section

Carrier

pmTransmittedCarrierPowerP6_37

The transmitted carrier power. Measured on the TR device(s) every 100 ms. Number of samples in range 36..37 dBm

Data Source

NodeB

Source Field

pmTransmittedCarrierPower

Source Section

Carrier

pmTransmittedCarrierPowerP6_38

The transmitted carrier power. Measured on the TR device(s) every 100 ms. Number of samples in range 37..38 dBm

Data Source

NodeB

Source Field

pmTransmittedCarrierPower

Source Section

Carrier

pmTransmittedCarrierPowerP6_39

The transmitted carrier power. Measured on the TR device(s) every 100 ms. Number of samples in range 38..39 dBm

Data Source

NodeB

Source Field

pmTransmittedCarrierPower

Source Section

Carrier

pmTransmittedCarrierPowerP6_40

The transmitted carrier power. Measured on the TR device(s) every 100 ms. Number of samples in range 39..40 dBm

Data Source

NodeB

Source Field

pmTransmittedCarrierPower

Source Section

Carrier

pmTransmittedCarrierPowerP6_41

The transmitted carrier power. Measured on the TR device(s) every 100 ms. Number of samples in range 40..41 dBm

Data Source

NodeB

Source Field

pmTransmittedCarrierPower

Source Section

Carrier

pmTransmittedCarrierPowerP6_42

The transmitted carrier power. Measured on the TR device(s) every 100 ms. Number of samples in range 41..42 dBm

Data Source

NodeB

Source Field

pmTransmittedCarrierPower

Source Section

Carrier

pmTransmittedCarrierPowerP6_43

The transmitted carrier power. Measured on the TR device(s) every 100 ms. Number of samples in range 42..43 dBm

Data Source

NodeB

Source Field

pmTransmittedCarrierPower

Source Section

Carrier

pmTransmittedCarrierPowerP6_44

The transmitted carrier power. Measured on the TR device(s) every 100 ms. Number of samples in range 43..44 dBm

Data Source

NodeB

Source Field

pmTransmittedCarrierPower

Source Section

Carrier

pmTransmittedCarrierPowerP6_45

The transmitted carrier power. Measured on the TR device(s) every 100 ms. Number of samples in range 44..45 dBm

Data Source

NodeB

Source Field

pmTransmittedCarrierPower

Source Section

Carrier

pmTransmittedCarrierPowerP6_46

The transmitted carrier power. Measured on the TR device(s) every 100 ms. Number of samples in range 45..46 dBm

Data Source

NodeB

Source Field

pmTransmittedCarrierPower

Source Section

Carrier

pmTransmittedCarrierPowerP6_47

The transmitted carrier power. Measured on the TR device(s) every 100 ms. Number of samples in range 46..47 dBm

Data Source

NodeB

Source Field

pmTransmittedCarrierPower

Source Section

Carrier

pmTransmittedCarrierPowerP6_48

The transmitted carrier power. Measured on the TR device(s) every 100 ms. Number of samples in range 47..48 dBm

Data Source

NodeB

Source Field

pmTransmittedCarrierPower

Source Section

Carrier

pmTransmittedCarrierPowerP6_49

The transmitted carrier power. Measured on the TR device(s) every 100 ms. Number of samples in range 48..49 dBm

Data Source

NodeB

Source Field

pmTransmittedCarrierPower

Source Section

Carrier

pmTransmittedCarrierPowerP6_50

The transmitted carrier power. Measured on the TR device(s) every 100 ms. Number of samples in range 49..50 dBm

Data Source

NodeB

Source Field

pmTransmittedCarrierPower

Source Section

Carrier

pmTransmittedCarrierPowerP6_51

The transmitted carrier power. Measured on the TR device(s) every 100 ms. Number of samples in range >50 dBm

Data Source

NodeB

Source Field

pmTransmittedCarrierPower

Source Section

Carrier

pmTXCarPwr_000

(Retired in Utran P6)(Retired in Utran P6)Transmitted Carrier Power - less than 0 dBm (pmTransmittedCarrierPower)

Data Source

NodeB_RNC_RXI

Source Field

pmTransmittedCarrierPower

Source Section

CellCarrier,Carrier

pmTXCarPwr_001

(Retired in Utran P6)Transmitted Carrier Power - 0.0 - 0.5 dBm (pmTransmittedCarrierPower)

Data Source

NodeB_RNC_RXI

Source Field

pmTransmittedCarrierPower

Source Section

CellCarrier,Carrier

pmTXCarPwr_002

(Retired in Utran P6)Transmitted Carrier Power - 0.5 - 1.0 dBm (pmTransmittedCarrierPower)

Data Source

NodeB_RNC_RXI

Source Field

pmTransmittedCarrierPower

Source Section

CellCarrier,Carrier

pmTXCarPwr_003

(Retired in Utran P6)Transmitted Carrier Power - 1.0 - 1.5 dBm (pmTransmittedCarrierPower)

Data Source

NodeB_RNC_RXI

Source Field

pmTransmittedCarrierPower

Source Section

CellCarrier,Carrier

pmTXCarPwr_004

(Retired in Utran P6)Transmitted Carrier Power - 1.5 - 2.0 dBm (pmTransmittedCarrierPower)

Data Source

NodeB_RNC_RXI

Source Field

pmTransmittedCarrierPower

Source Section

CellCarrier,Carrier

pmTXCarPwr_005

(Retired in Utran P6)Transmitted Carrier Power - 2.0 - 2.5 dBm (pmTransmittedCarrierPower)

Data Source

NodeB_RNC_RXI

Source Field

pmTransmittedCarrierPower

Source Section

CellCarrier,Carrier

pmTXCarPwr_006

(Retired in Utran P6)Transmitted Carrier Power - 2.5 - 3.0 dBm (pmTransmittedCarrierPower)

Data Source

NodeB_RNC_RXI

Source Field

pmTransmittedCarrierPower

Source Section

CellCarrier,Carrier

pmTXCarPwr_007

(Retired in Utran P6)Transmitted Carrier Power - 3.0 - 3.5 dBm (pmTransmittedCarrierPower)

Data Source

NodeB_RNC_RXI

Source Field

pmTransmittedCarrierPower

Source Section

CellCarrier,Carrier

pmTXCarPwr_008

(Retired in Utran P6)Transmitted Carrier Power - 3.5 - 4.0 dBm (pmTransmittedCarrierPower)

Data Source

NodeB_RNC_RXI

Source Field

pmTransmittedCarrierPower

Source Section

CellCarrier,Carrier

pmTXCarPwr_009

(Retired in Utran P6)Transmitted Carrier Power - 4.0 - 4.5 dBm (pmTransmittedCarrierPower)

Data Source

NodeB_RNC_RXI

Source Field

pmTransmittedCarrierPower

Source Section

CellCarrier,Carrier

pmTXCarPwr_010

(Retired in Utran P6)Transmitted Carrier Power - 4.5 - 5.0 dBm (pmTransmittedCarrierPower)

Data Source

NodeB_RNC_RXI

Source Field

pmTransmittedCarrierPower

Source Section

CellCarrier,Carrier

pmTXCarPwr_011

(Retired in Utran P6)Transmitted Carrier Power - 5.0 - 5.5 dBm (pmTransmittedCarrierPower)

Data Source

NodeB_RNC_RXI

Source Field

pmTransmittedCarrierPower

Source Section

CellCarrier,Carrier

pmTXCarPwr_012

(Retired in Utran P6)Transmitted Carrier Power - 5.5 - 6.0 dBm (pmTransmittedCarrierPower)

Data Source

NodeB_RNC_RXI

Source Field

pmTransmittedCarrierPower

Source Section

CellCarrier,Carrier

pmTXCarPwr_013

(Retired in Utran P6)Transmitted Carrier Power - 6.0 - 6.5 dBm (pmTransmittedCarrierPower)

Data Source

NodeB_RNC_RXI

Source Field

pmTransmittedCarrierPower

Source Section

CellCarrier,Carrier

pmTXCarPwr_014

(Retired in Utran P6)Transmitted Carrier Power - 6.5 - 7.0 dBm (pmTransmittedCarrierPower)

Data Source

NodeB_RNC_RXI

Source Field

pmTransmittedCarrierPower

Source Section

CellCarrier,Carrier

pmTXCarPwr_015

(Retired in Utran P6)Transmitted Carrier Power - 7.0 - 7.5 dBm (pmTransmittedCarrierPower)

Data Source

NodeB_RNC_RXI

Source Field

pmTransmittedCarrierPower

Source Section

CellCarrier,Carrier

pmTXCarPwr_016

(Retired in Utran P6)Transmitted Carrier Power - 7.5 - 8.0 dBm (pmTransmittedCarrierPower)

Data Source

NodeB_RNC_RXI

Source Field

pmTransmittedCarrierPower

Source Section

CellCarrier,Carrier

pmTXCarPwr_017

(Retired in Utran P6)Transmitted Carrier Power - 8.0 - 8.5 dBm (pmTransmittedCarrierPower)

Data Source

NodeB_RNC_RXI

Source Field

pmTransmittedCarrierPower

Source Section

CellCarrier,Carrier

pmTXCarPwr_018

(Retired in Utran P6)Transmitted Carrier Power - 8.5 - 9.0 dBm (pmTransmittedCarrierPower)

Data Source

NodeB_RNC_RXI

Source Field

pmTransmittedCarrierPower

Source Section

CellCarrier,Carrier

pmTXCarPwr_019

(Retired in Utran P6)Transmitted Carrier Power - 9.0 - 9.5 dBm (pmTransmittedCarrierPower)

Data Source

NodeB_RNC_RXI

Source Field

pmTransmittedCarrierPower

Source Section

CellCarrier,Carrier

pmTXCarPwr_020

(Retired in Utran P6)Transmitted Carrier Power - 9.5 - 10.0 dBm (pmTransmittedCarrierPower)

Data Source

NodeB_RNC_RXI

Source Field

pmTransmittedCarrierPower

Source Section

CellCarrier,Carrier

pmTXCarPwr_021

(Retired in Utran P6)Transmitted Carrier Power - 10.0 - 10.5 dBm (pmTransmittedCarrierPower)

Data Source

NodeB_RNC_RXI

Source Field

pmTransmittedCarrierPower

Source Section

CellCarrier,Carrier

pmTXCarPwr_022

(Retired in Utran P6)Transmitted Carrier Power - 10.5 - 11.0 dBm (pmTransmittedCarrierPower)

Data Source

NodeB_RNC_RXI

Source Field

pmTransmittedCarrierPower

Source Section

CellCarrier,Carrier

pmTXCarPwr_023

(Retired in Utran P6)Transmitted Carrier Power - 11.0 - 11.5 dBm (pmTransmittedCarrierPower)

Data Source

NodeB_RNC_RXI

Source Field

pmTransmittedCarrierPower

Source Section

CellCarrier,Carrier

pmTXCarPwr_024

(Retired in Utran P6)Transmitted Carrier Power - 11.5 - 12.0 dBm (pmTransmittedCarrierPower)

Data Source

NodeB_RNC_RXI

Source Field

pmTransmittedCarrierPower

Source Section

CellCarrier,Carrier

pmTXCarPwr_025

(Retired in Utran P6)Transmitted Carrier Power - 12.0 - 12.5 dBm (pmTransmittedCarrierPower)

Data Source

NodeB_RNC_RXI

Source Field

pmTransmittedCarrierPower

Source Section

CellCarrier,Carrier

pmTXCarPwr_026

(Retired in Utran P6)Transmitted Carrier Power - 12.5 - 13.0 dBm (pmTransmittedCarrierPower)

Data Source

NodeB_RNC_RXI

Source Field

pmTransmittedCarrierPower

Source Section

CellCarrier,Carrier

pmTXCarPwr_027

(Retired in Utran P6)Transmitted Carrier Power - 13.0 - 13.5 dBm (pmTransmittedCarrierPower)

Data Source

NodeB_RNC_RXI

Source Field

pmTransmittedCarrierPower

Source Section

CellCarrier,Carrier

pmTXCarPwr_028

(Retired in Utran P6)Transmitted Carrier Power - 13.5 - 14.0 dBm (pmTransmittedCarrierPower)

Data Source

NodeB_RNC_RXI

Source Field

pmTransmittedCarrierPower

Source Section

CellCarrier,Carrier

pmTXCarPwr_029

(Retired in Utran P6)Transmitted Carrier Power - 14.0 - 14.5 dBm (pmTransmittedCarrierPower)

Data Source

NodeB_RNC_RXI

Source Field

pmTransmittedCarrierPower

Source Section

CellCarrier,Carrier

pmTXCarPwr_030

(Retired in Utran P6)Transmitted Carrier Power - 14.5 - 15.0 dBm (pmTransmittedCarrierPower)

Data Source

NodeB_RNC_RXI

Source Field

pmTransmittedCarrierPower

Source Section

CellCarrier,Carrier

pmTXCarPwr_031

(Retired in Utran P6)Transmitted Carrier Power - 15.0 - 15.5 dBm (pmTransmittedCarrierPower)

Data Source

NodeB_RNC_RXI

Source Field

pmTransmittedCarrierPower

Source Section

CellCarrier,Carrier

pmTXCarPwr_032

(Retired in Utran P6)Transmitted Carrier Power - 15.5 - 16.0 dBm (pmTransmittedCarrierPower)

Data Source

NodeB_RNC_RXI

Source Field

pmTransmittedCarrierPower

Source Section

CellCarrier,Carrier

pmTXCarPwr_033

(Retired in Utran P6)Transmitted Carrier Power - 16.0 - 16.5 dBm (pmTransmittedCarrierPower)

Data Source

NodeB_RNC_RXI

Source Field

pmTransmittedCarrierPower

Source Section

CellCarrier,Carrier

pmTXCarPwr_034

(Retired in Utran P6)Transmitted Carrier Power - 16.5 - 17.0 dBm (pmTransmittedCarrierPower)

Data Source

NodeB_RNC_RXI

Source Field

pmTransmittedCarrierPower

Source Section

CellCarrier,Carrier

pmTXCarPwr_035

(Retired in Utran P6)Transmitted Carrier Power - 17.0 - 17.5 dBm (pmTransmittedCarrierPower)

Data Source

NodeB_RNC_RXI

Source Field

pmTransmittedCarrierPower

Source Section

CellCarrier,Carrier

pmTXCarPwr_036

(Retired in Utran P6)Transmitted Carrier Power - 17.5 - 18.0 dBm (pmTransmittedCarrierPower)

Data Source

NodeB_RNC_RXI

Source Field

pmTransmittedCarrierPower

Source Section

CellCarrier,Carrier

pmTXCarPwr_037

(Retired in Utran P6)Transmitted Carrier Power - 18.0 - 18.5 dBm (pmTransmittedCarrierPower)

Data Source

NodeB_RNC_RXI

Source Field

pmTransmittedCarrierPower

Source Section

CellCarrier,Carrier

pmTXCarPwr_038

(Retired in Utran P6)Transmitted Carrier Power - 18.5 - 19.0 dBm (pmTransmittedCarrierPower)

Data Source

NodeB_RNC_RXI

Source Field

pmTransmittedCarrierPower

Source Section

CellCarrier,Carrier

pmTXCarPwr_039

(Retired in Utran P6)Transmitted Carrier Power - 19.0 - 19.5 dBm (pmTransmittedCarrierPower)

Data Source

NodeB_RNC_RXI

Source Field

pmTransmittedCarrierPower

Source Section

CellCarrier,Carrier

pmTXCarPwr_040

(Retired in Utran P6)Transmitted Carrier Power - 19.5 - 20.0 dBm (pmTransmittedCarrierPower)

Data Source

NodeB_RNC_RXI

Source Field

pmTransmittedCarrierPower

Source Section

CellCarrier,Carrier

pmTXCarPwr_041

(Retired in Utran P6)Transmitted Carrier Power - 20.0 - 20.5 dBm (pmTransmittedCarrierPower)

Data Source

NodeB_RNC_RXI

Source Field

pmTransmittedCarrierPower

Source Section

CellCarrier,Carrier

pmTXCarPwr_042

(Retired in Utran P6)Transmitted Carrier Power - 20.5 - 21.0 dBm (pmTransmittedCarrierPower)

Data Source

NodeB_RNC_RXI

Source Field

pmTransmittedCarrierPower

Source Section

CellCarrier,Carrier

pmTXCarPwr_043

(Retired in Utran P6)Transmitted Carrier Power - 21.0 - 21.5 dBm (pmTransmittedCarrierPower)

Data Source

NodeB_RNC_RXI

Source Field

pmTransmittedCarrierPower

Source Section

CellCarrier,Carrier

pmTXCarPwr_044

(Retired in Utran P6)Transmitted Carrier Power - 21.5 - 22.0 dBm (pmTransmittedCarrierPower)

Data Source

NodeB_RNC_RXI

Source Field

pmTransmittedCarrierPower

Source Section

CellCarrier,Carrier

pmTXCarPwr_045

(Retired in Utran P6)Transmitted Carrier Power - 22.0 - 22.5 dBm (pmTransmittedCarrierPower)

Data Source

NodeB_RNC_RXI

Source Field

pmTransmittedCarrierPower

Source Section

CellCarrier,Carrier

pmTXCarPwr_046

(Retired in Utran P6)Transmitted Carrier Power - 22.5 - 23.0 dBm (pmTransmittedCarrierPower)

Data Source

NodeB_RNC_RXI

Source Field

pmTransmittedCarrierPower

Source Section

CellCarrier,Carrier

pmTXCarPwr_047

(Retired in Utran P6)Transmitted Carrier Power - 23.0 - 23.5 dBm (pmTransmittedCarrierPower)

Data Source

NodeB_RNC_RXI

Source Field

pmTransmittedCarrierPower

Source Section

CellCarrier,Carrier

pmTXCarPwr_048

(Retired in Utran P6)Transmitted Carrier Power - 23.5 - 24.0 dBm (pmTransmittedCarrierPower)

Data Source

NodeB_RNC_RXI

Source Field

pmTransmittedCarrierPower

Source Section

CellCarrier,Carrier

pmTXCarPwr_049

(Retired in Utran P6)Transmitted Carrier Power - 24.0 - 24.5 dBm (pmTransmittedCarrierPower)

Data Source

NodeB_RNC_RXI

Source Field

pmTransmittedCarrierPower

Source Section

CellCarrier,Carrier

pmTXCarPwr_050

(Retired in Utran P6)Transmitted Carrier Power - 24.5 - 25.0 dBm (pmTransmittedCarrierPower)

Data Source

NodeB_RNC_RXI

Source Field

pmTransmittedCarrierPower

Source Section

CellCarrier,Carrier

pmTXCarPwr_051

(Retired in Utran P6)Transmitted Carrier Power - 25.0 - 25.5 dBm (pmTransmittedCarrierPower)

Data Source

NodeB_RNC_RXI

Source Field

pmTransmittedCarrierPower

Source Section

CellCarrier,Carrier

pmTXCarPwr_052

(Retired in Utran P6)Transmitted Carrier Power - 25.5 - 26.0 dBm (pmTransmittedCarrierPower)

Data Source

NodeB_RNC_RXI

Source Field

pmTransmittedCarrierPower

Source Section

CellCarrier,Carrier

pmTXCarPwr_053

(Retired in Utran P6)Transmitted Carrier Power - 26.0 - 26.5 dBm (pmTransmittedCarrierPower)

Data Source

NodeB_RNC_RXI

Source Field

pmTransmittedCarrierPower

Source Section

CellCarrier,Carrier

pmTXCarPwr_054

(Retired in Utran P6)Transmitted Carrier Power - 26.5 - 27.0 dBm (pmTransmittedCarrierPower)

Data Source

NodeB_RNC_RXI

Source Field

pmTransmittedCarrierPower

Source Section

CellCarrier,Carrier

pmTXCarPwr_055

(Retired in Utran P6)Transmitted Carrier Power - 27.0 - 27.5 dBm (pmTransmittedCarrierPower)

Data Source

NodeB_RNC_RXI

Source Field

pmTransmittedCarrierPower

Source Section

CellCarrier,Carrier

pmTXCarPwr_056

(Retired in Utran P6)Transmitted Carrier Power - 27.5 - 28.0 dBm (pmTransmittedCarrierPower)

Data Source

NodeB_RNC_RXI

Source Field

pmTransmittedCarrierPower

Source Section

CellCarrier,Carrier

pmTXCarPwr_057

(Retired in Utran P6)Transmitted Carrier Power - 28.0 - 28.5 dBm (pmTransmittedCarrierPower)

Data Source

NodeB_RNC_RXI

Source Field

pmTransmittedCarrierPower

Source Section

CellCarrier,Carrier

pmTXCarPwr_058

(Retired in Utran P6)Transmitted Carrier Power - 28.5 - 29.0 dBm (pmTransmittedCarrierPower)

Data Source

NodeB_RNC_RXI

Source Field

pmTransmittedCarrierPower

Source Section

CellCarrier,Carrier

pmTXCarPwr_059

(Retired in Utran P6)Transmitted Carrier Power - 29.0 - 29.5 dBm (pmTransmittedCarrierPower)

Data Source

NodeB_RNC_RXI

Source Field

pmTransmittedCarrierPower

Source Section

CellCarrier,Carrier

pmTXCarPwr_060

(Retired in Utran P6)Transmitted Carrier Power - 29.5 - 30.0 dBm (pmTransmittedCarrierPower)

Data Source

NodeB_RNC_RXI

Source Field

pmTransmittedCarrierPower

Source Section

CellCarrier,Carrier

pmTXCarPwr_061

(Retired in Utran P6)Transmitted Carrier Power - 30.0 - 30.5 dBm (pmTransmittedCarrierPower)

Data Source

NodeB_RNC_RXI

Source Field

pmTransmittedCarrierPower

Source Section

CellCarrier,Carrier

pmTXCarPwr_062

(Retired in Utran P6)Transmitted Carrier Power - 30.5 - 31.0 dBm (pmTransmittedCarrierPower)

Data Source

NodeB_RNC_RXI

Source Field

pmTransmittedCarrierPower

Source Section

CellCarrier,Carrier

pmTXCarPwr_063

(Retired in Utran P6)Transmitted Carrier Power - 31.0 - 31.5 dBm (pmTransmittedCarrierPower)

Data Source

NodeB_RNC_RXI

Source Field

pmTransmittedCarrierPower

Source Section

CellCarrier,Carrier

pmTXCarPwr_064

(Retired in Utran P6)Transmitted Carrier Power - 31.5 - 32.0 dBm (pmTransmittedCarrierPower)

Data Source

NodeB_RNC_RXI

Source Field

pmTransmittedCarrierPower

Source Section

CellCarrier,Carrier

pmTXCarPwr_065

(Retired in Utran P6)Transmitted Carrier Power - 32.0 - 32.5 dBm (pmTransmittedCarrierPower)

Data Source

NodeB_RNC_RXI

Source Field

pmTransmittedCarrierPower

Source Section

CellCarrier,Carrier

pmTXCarPwr_066

(Retired in Utran P6)Transmitted Carrier Power - 32.5 - 33.0 dBm (pmTransmittedCarrierPower)

Data Source

NodeB_RNC_RXI

Source Field

pmTransmittedCarrierPower

Source Section

CellCarrier,Carrier

pmTXCarPwr_067

(Retired in Utran P6)Transmitted Carrier Power - 33.0 - 33.5 dBm (pmTransmittedCarrierPower)

Data Source

NodeB_RNC_RXI

Source Field

pmTransmittedCarrierPower

Source Section

CellCarrier,Carrier

pmTXCarPwr_068

(Retired in Utran P6)Transmitted Carrier Power - 33.5 - 34.0 dBm (pmTransmittedCarrierPower)

Data Source

NodeB_RNC_RXI

Source Field

pmTransmittedCarrierPower

Source Section

CellCarrier,Carrier

pmTXCarPwr_069

(Retired in Utran P6)Transmitted Carrier Power - 34.0 - 34.5 dBm (pmTransmittedCarrierPower)

Data Source

NodeB_RNC_RXI

Source Field

pmTransmittedCarrierPower

Source Section

CellCarrier,Carrier

pmTXCarPwr_070

(Retired in Utran P6)Transmitted Carrier Power - 34.5 - 35.0 dBm (pmTransmittedCarrierPower)

Data Source

NodeB_RNC_RXI

Source Field

pmTransmittedCarrierPower

Source Section

CellCarrier,Carrier

pmTXCarPwr_071

(Retired in Utran P6)Transmitted Carrier Power - 35.0 - 35.5 dBm (pmTransmittedCarrierPower)

Data Source

NodeB_RNC_RXI

Source Field

pmTransmittedCarrierPower

Source Section

CellCarrier,Carrier

pmTXCarPwr_072

(Retired in Utran P6)Transmitted Carrier Power - 35.5 - 36.0 dBm (pmTransmittedCarrierPower)

Data Source

NodeB_RNC_RXI

Source Field

pmTransmittedCarrierPower

Source Section

CellCarrier,Carrier

pmTXCarPwr_073

(Retired in Utran P6)Transmitted Carrier Power - 36.0 - 36.5 dBm (pmTransmittedCarrierPower)

Data Source

NodeB_RNC_RXI

Source Field

pmTransmittedCarrierPower

Source Section

CellCarrier,Carrier

pmTXCarPwr_074

(Retired in Utran P6)Transmitted Carrier Power - 36.5 - 37.0 dBm (pmTransmittedCarrierPower)

Data Source

NodeB_RNC_RXI

Source Field

pmTransmittedCarrierPower

Source Section

CellCarrier,Carrier

pmTXCarPwr_075

(Retired in Utran P6)Transmitted Carrier Power - 37.0 - 37.5 dBm (pmTransmittedCarrierPower)

Data Source

NodeB_RNC_RXI

Source Field

pmTransmittedCarrierPower

Source Section

CellCarrier,Carrier

pmTXCarPwr_076

(Retired in Utran P6)Transmitted Carrier Power - 37.5 - 38.0 dBm (pmTransmittedCarrierPower)

Data Source

NodeB_RNC_RXI

Source Field

pmTransmittedCarrierPower

Source Section

CellCarrier,Carrier

pmTXCarPwr_077

(Retired in Utran P6)Transmitted Carrier Power - 38.0 - 38.5 dBm (pmTransmittedCarrierPower)

Data Source

NodeB_RNC_RXI

Source Field

pmTransmittedCarrierPower

Source Section

CellCarrier,Carrier

pmTXCarPwr_078

(Retired in Utran P6)Transmitted Carrier Power - 38.5 - 39.0 dBm (pmTransmittedCarrierPower)

Data Source

NodeB_RNC_RXI

Source Field

pmTransmittedCarrierPower

Source Section

CellCarrier,Carrier

pmTXCarPwr_079

(Retired in Utran P6)Transmitted Carrier Power - 39.0 - 39.5 dBm (pmTransmittedCarrierPower)

Data Source

NodeB_RNC_RXI

Source Field

pmTransmittedCarrierPower

Source Section

CellCarrier,Carrier

pmTXCarPwr_080

(Retired in Utran P6)Transmitted Carrier Power - 39.5 - 40.0 dBm (pmTransmittedCarrierPower)

Data Source

NodeB_RNC_RXI

Source Field

pmTransmittedCarrierPower

Source Section

CellCarrier,Carrier

pmTXCarPwr_081

(Retired in Utran P6)Transmitted Carrier Power - 40.0 - 40.5 dBm (pmTransmittedCarrierPower)

Data Source

NodeB_RNC_RXI

Source Field

pmTransmittedCarrierPower

Source Section

CellCarrier,Carrier

pmTXCarPwr_082

(Retired in Utran P6)Transmitted Carrier Power - 40.5 - 41.0 dBm (pmTransmittedCarrierPower)

Data Source

NodeB_RNC_RXI

Source Field

pmTransmittedCarrierPower

Source Section

CellCarrier,Carrier

pmTXCarPwr_083

(Retired in Utran P6)Transmitted Carrier Power - 41.0 - 41.5 dBm (pmTransmittedCarrierPower)

Data Source

NodeB_RNC_RXI

Source Field

pmTransmittedCarrierPower

Source Section

CellCarrier,Carrier

pmTXCarPwr_084

(Retired in Utran P6)Transmitted Carrier Power - 41.5 - 42.0 dBm (pmTransmittedCarrierPower)

Data Source

NodeB_RNC_RXI

Source Field

pmTransmittedCarrierPower

Source Section

CellCarrier,Carrier

pmTXCarPwr_085

(Retired in Utran P6)Transmitted Carrier Power - 42.0 - 42.5 dBm (pmTransmittedCarrierPower)

Data Source

NodeB_RNC_RXI

Source Field

pmTransmittedCarrierPower

Source Section

CellCarrier,Carrier

pmTXCarPwr_086

(Retired in Utran P6)Transmitted Carrier Power - 42.5 - 43.0 dBm (pmTransmittedCarrierPower)

Data Source

NodeB_RNC_RXI

Source Field

pmTransmittedCarrierPower

Source Section

CellCarrier,Carrier

pmTXCarPwr_087

(Retired in Utran P6)Transmitted Carrier Power - 43.0 - 43.5 dBm (pmTransmittedCarrierPower)

Data Source

NodeB_RNC_RXI

Source Field

pmTransmittedCarrierPower

Source Section

CellCarrier,Carrier

pmTXCarPwr_088

(Retired in Utran P6)Transmitted Carrier Power - 43.5 - 44.0 dBm (pmTransmittedCarrierPower)

Data Source

NodeB_RNC_RXI

Source Field

pmTransmittedCarrierPower

Source Section

CellCarrier,Carrier

pmTXCarPwr_089

(Retired in Utran P6)Transmitted Carrier Power - 44.0 - 44.5 dBm (pmTransmittedCarrierPower)

Data Source

NodeB_RNC_RXI

Source Field

pmTransmittedCarrierPower

Source Section

CellCarrier,Carrier

pmTXCarPwr_090

(Retired in Utran P6)Transmitted Carrier Power - 44.5 - 45.0 dBm (pmTransmittedCarrierPower)

Data Source

NodeB_RNC_RXI

Source Field

pmTransmittedCarrierPower

Source Section

CellCarrier,Carrier

pmTXCarPwr_091

(Retired in Utran P6)Transmitted Carrier Power - 45.0 - 45.5 dBm (pmTransmittedCarrierPower)

Data Source

NodeB_RNC_RXI

Source Field

pmTransmittedCarrierPower

Source Section

CellCarrier,Carrier

pmTXCarPwr_092

(Retired in Utran P6)Transmitted Carrier Power - 45.5 - 46.0 dBm (pmTransmittedCarrierPower)

Data Source

NodeB_RNC_RXI

Source Field

pmTransmittedCarrierPower

Source Section

CellCarrier,Carrier

pmTXCarPwr_093

(Retired in Utran P6)Transmitted Carrier Power - 46.0 - 46.5 dBm (pmTransmittedCarrierPower)

Data Source

NodeB_RNC_RXI

Source Field

pmTransmittedCarrierPower

Source Section

CellCarrier,Carrier

pmTXCarPwr_094

(Retired in Utran P6)Transmitted Carrier Power - 46.5 - 47.0 dBm (pmTransmittedCarrierPower)

Data Source

NodeB_RNC_RXI

Source Field

pmTransmittedCarrierPower

Source Section

CellCarrier,Carrier

pmTXCarPwr_095

(Retired in Utran P6)Transmitted Carrier Power - 47.0 - 47.5 dBm (pmTransmittedCarrierPower)

Data Source

NodeB_RNC_RXI

Source Field

pmTransmittedCarrierPower

Source Section

CellCarrier,Carrier

pmTXCarPwr_096

(Retired in Utran P6)Transmitted Carrier Power - 47.5 - 48.0 dBm (pmTransmittedCarrierPower)

Data Source

NodeB_RNC_RXI

Source Field

pmTransmittedCarrierPower

Source Section

CellCarrier,Carrier

pmTXCarPwr_097

(Retired in Utran P6)Transmitted Carrier Power - 48.0 - 48.5 dBm (pmTransmittedCarrierPower)

Data Source

NodeB_RNC_RXI

Source Field

pmTransmittedCarrierPower

Source Section

CellCarrier,Carrier

pmTXCarPwr_098

(Retired in Utran P6)Transmitted Carrier Power - 48.5 - 49.0 dBm (pmTransmittedCarrierPower)

Data Source

NodeB_RNC_RXI

Source Field

pmTransmittedCarrierPower

Source Section

CellCarrier,Carrier

pmTXCarPwr_099

(Retired in Utran P6)Transmitted Carrier Power - 49.0 - 49.5 dBm (pmTransmittedCarrierPower)

Data Source

NodeB_RNC_RXI

Source Field

pmTransmittedCarrierPower

Source Section

CellCarrier,Carrier

pmTXCarPwr_100

(Retired in Utran P6)Transmitted Carrier Power - 49.5 - 50.0 dBm (pmTransmittedCarrierPower)

Data Source

NodeB_RNC_RXI

Source Field

pmTransmittedCarrierPower

Source Section

CellCarrier,Carrier

pmTXCarPwr_101

(Retired in Utran P6)Transmitted Carrier Power - 50.0 - 50.5 dBm (pmTransmittedCarrierPower)

Data Source

NodeB_RNC_RXI

Source Field

pmTransmittedCarrierPower

Source Section

CellCarrier,Carrier

pmTXCarPwr_102

(Retired in Utran P6)Transmitted Carrier Power - equal or greater than 50.5 dBm (pmTransmittedCarrierPower)

Data Source

NodeB_RNC_RXI

Source Field

pmTransmittedCarrierPower

Source Section

CellCarrier,Carrier

pmTxCarrierPowerP5MD_00

(Retired in Utran P6)The transmitted carrier power. Measured on the TR device(s) every 100 ms. Number of samples in range < 25dBm

Data Source

NodeB

Source Field

pmTransmittedCarrierPower

Source Section

Carrier

pmTxCarrierPowerP5MD_01

(Retired in Utran P6)The transmitted carrier power. Measured on the TR device(s) every 100 ms. Number of samples in range 25..25.5dBm

Data Source

NodeB

Source Field

pmTransmittedCarrierPower

Source Section

Carrier

pmTxCarrierPowerP5MD_51

(Retired in Utran P6)The transmitted carrier power. Measured on the TR device(s) every 100 ms. Number of samples in range >= 50dBm

Data Source

NodeB

Source Field

pmTransmittedCarrierPower

Source Section

Carrier

CcDevice Primitive Calculations

The following is a list of primitive calculations for the CcDevice entity.

GRAPHmultiLineSeparator

Special Control Field for Multi-Line Graphs

Calculation

```
""
```

NUMDAYS

of days in Report

Calculation

```
DAYSINREPORT()
```

NUMHOURS

of hours in Summation Data

CcDevice Peg Counts

The following is a list of peg counts for the CcDevice entity.

PERLENSEC

Period Length

Data Source

RNC

Source Field

PERLENSEC

Source Section

CcDevice_RNC_WMGeneral

PERLENSEC_K

Period length in seconds aggregation summation in time domain and aggregation maximum between Network Elements.

Data Source

RNC

Source Field

PERLENSEC

Source Section

CcDevice_RNC_WMGeneral

pmSamplesMeasuredCcSpLoad

Number of samples recorded within the ROP period for "Level of the averaged measured load on the CC SP"

Data Source

RNC

Source Field

pmSamplesMeasuredCcSpLoad

Source Section

CcDevice

pmSumMeasuredCcSpLoad

Number of samples recorded within the ROP period for "Level of the averaged measured load on the CC SP"

Data Source

RNC

Source Field

pmSumMeasuredCcSpLoad

Source Section

CcDevice

CcDevice_NodeB Primitive Calculations

The following is a list of primitive calculations for the CcDevice_NodeB entity.

GRAPHmultiLineSeparator

Special Control Field for Multi-Line Graphs

Calculation

```
""
```

NUMDAYS

of days in Report

Calculation

```
DAYSINREPORT()
```

NUMHOURS

of hours in Summation Data

Calculation

CcDevice_NodeB Peg Counts

The following is a list of peg counts for the CcDevice_NodeB entity.

PERLENSEC

Period Length

Data Source

NodeB_RXI

Source Field

PERLENSEC

Source Section

CcDevice_NodeB_WMGeneral

PERLENSEC_K

Period length in seconds aggregation summation in time domain and aggregation maximum between Network Elements.

Data Source

NodeB_RXI

Source Field

PERLENSEC

Source Section

CcDevice_NodeB_WMGeneral

pmSamplesMeasuredCcSpLoad

Number of samples recorded within the ROP period for "Level of the averaged measured load on the CC SP"

Data Source

RNC

Source Field

pmSamplesMeasuredCcSpLoad

Source Section

CcDevice

pmSumMeasuredCcSpLoad

Number of samples recorded within the ROP period for "Level of the averaged measured load on the CC SP"

Data Source

RNC

Source Field

pmSumMeasuredCcSpLoad

Source Section

CcDevice

RNC_RELEASE

Release

Data Source

NodeB_RXI

Source Section

CcDevice_NodeB

CcDevice_RNC Primitive Calculations

The following is a list of primitive calculations for the CcDevice_RNC entity.

GRAPHmultiLineSeparator

Special Control Field for Multi-Line Graphs

Calculation

```
""
```

NUMDAYS

of days in Report

Calculation

```
DAYSINREPORT()
```

NUMHOURS

of hours in Summation Data

Calculation

CcDevice_RNC Peg Counts

The following is a list of peg counts for the CcDevice_RNC entity.

PERLENSEC

Period Length

Data Source

RNC_RXI

Source Field

PERLENSEC

Source Section

CcDevice_RNC_WMGeneral

PERLENSEC_K

Period length in seconds aggregation summation in time domain and aggregation maximum between Network Elements.

Data Source

RNC_RXI

Source Field

PERLENSEC

Source Section

CcDevice_RNC_WMGeneral

pmSamplesMeasuredCcSpLoad

Number of samples recorded within the ROP period for "Level of the averaged measured load on the CC SP"

Data Source

RNC

Source Field

pmSamplesMeasuredCcSpLoad

Source Section

CcDevice

pmSumMeasuredCcSpLoad

Number of samples recorded within the ROP period for "Level of the averaged measured load on the CC SP"

Data Source

RNC

Source Field

pmSumMeasuredCcSpLoad

Source Section

CcDevice

RNC_RELEASE

Release

Data Source

RNC_RXI

Source Section

CcDevice_RNC

CnOperator Primitive Calculations

The following is a list of primitive calculations for the CnOperator entity.

GRAPHmultiLineSeparator

Special Control Field for Multi-Line Graphs

Calculation

```
""
```

NUMDAYS

of days in Report

Calculation

```
DAYSINREPORT()
```

NUMHOURS

of hours in Summation Data

ContinuityCheckService Primitive Calculations

The following is a list of primitive calculations for the ContinuityCheckService entity.

GRAPHmultiLineSeparator

Special Control Field for Multi-Line Graphs

Calculation

```
""
```

NUMDAYS

of days in Report

Calculation

```
DAYSINREPORT()
```

NUMHOURS

of hours in Summation Data

Calculation

ContinuityCheckService Peg Counts

The following is a list of peg counts for the ContinuityCheckService entity.

PERLENSEC

Period length in seconds

Data Source

RNC_RXI

Source Field

PERLENSEC

Source Section

ContinuityCheckService_Gen

pmForcedRelease

Total Number of forced device releases for ex due to spontaneous device fault

Data Source

RNC_RXI

Source Field

pmForcedRelease

Source Section

ContinuityCheckService

pmNormalRelease

Total Number of normal device releases

Data Source

RNC_RXI

Source Field

pmNormalRelease

Source Section

ContinuityCheckService

RNC_RELEASE

Release

Data Source

RNC_RXI

Source Field

RNC_RELEASE

Source Section

ContinuityCheckService_Gen

CsdDigitalService Primitive Calculations

The following is a list of primitive calculations for the CsdDigitalService entity.

GRAPHmultiLineSeparator

Special Control Field for Multi-Line Graphs

Calculation

```
""
```

NUMDAYS

of days in Report

Calculation

```
DAYSINREPORT()
```

NUMHOURS

of hours in Summation Data

Calculation

p_GSM_FTM_connection_reservation_success

GSM FTM connection reservation success rate Healthy value range for FTM connection reservation success rate: 99 - 100%

Calculation

```
pmFtmSuccGsm / vsum(pmFtmSuccGsm , pmFtmFailGsm)* 100.0
```

p_GSM_UDI_connection_reservation_success

GSM UDI connection reservation success rate Healthy value range for UDI connection reservation success rate: 99 - 100%

Calculation

```
(pmUdiSuccGsm / vsum(pmUdiSuccGsm , pmUdiFailGsm)) * 100.0
```

p_Originating_GSM_modem_connection_success

Originating GSM modem connection success rate Healthy value range for originating modem connection success rate: 95 - 100%

Calculation

```
(pmModemOSuccGsm / (vsum (pmModemOSuccGsm , pmModemOFailGsm))) * 100.0
```

p_Originating_WCDMA_modem_connection_success

Originating WCDMA modem connection success rate Healthy value range for originating modem connection success rate: 95 - 100%

Calculation

```
(pmModemOSucc / (vsum(pmModemOSucc , pmModemOFail))) * 100.0
```

p_Seizures_Sucess_Rate

Percentege of Seizures which are sucessful

Calculation

```
100.0 * vsum( pmTotalSeizures, -1 * pmUnsuccSeizures ) / pmTotalSeizures
```

p_Terminating_GSM_modem_connection_success

Terminating GSM modem connection success rate Healthy value range for terminating modem connection success rate: 95 - 100%

Calculation

```
pmModemTSuccGsm / vsum (pmModemTSuccGsm , pmModemTFailGsm) * 100.0
```

Updated: 2009-07-22

p_Terminating_WCDMA_modem_connection_success

Terminating WCDMA modem connection success rate Healthy value range for terminating modem connection success rate: 95 - 100%

Calculation

```
pmModemTermSuccess / vsum(pmModemTermSuccess , pmModemTermFail) * 100.0
```

p_WCDMA_FTM_connection_reservation_success

WCDMA FTM connection reservation success rate Healthy value range for WCDMA FTM connection reservation success rate: 99 - 100%

Calculation

```
(pmFtmSucc / (vsum(pmFtmSucc , pmFtmFail))) * 100.0
```

p_WCDMA_UDI_connection_reservation_success

WCDMA UDI connection reservation success rate Healthy value range for WCDMA UDI connection reservation success rate: 99 - 100%

Calculation

```
(pmUdiSucc / (vsum(pmUdiSucc , pmUdiFail))) * 100.0
```

CsdDigitalService Peg Counts

The following is a list of peg counts for the CsdDigitalService entity.

PERLENSEC

Period length in seconds

Data Source

RNC_RXI

Source Field

PERLENSEC

Source Section

CsdDigitalService_Gen

pmForcedRelease

Total Number of forced device releases for ex due to spontaneous device fault

Data Source

RNC_RXI

Source Field

pmForcedRelease

Source Section

CsdDigitalService

pmFtmFail

The total number of unsuccessful, non-transparent FTM WCDMA connections.

Data Source

RNC_RXI

Source Field

pmFtmFail

Source Section

CsdDigitalService

pmFtmFailGsm

The total number of unsuccessful, non-transparent Frame Tunnel Mode (FTM) GSM connections.

Data Source

RNC_RXI

Source Field

pmFtmFailGsm

Source Section

CsdDigitalService

pmFtmSucc

The total number of successful non-transparent FTM WCDMA connections.

Data Source

RNC_RXI

Source Field

pmFtmSucc

Source Section

CsdDigitalService

pmFtmSuccGsm

The total number of successful, non-transparent FTM GSM connections.

Data Source

RNC_RXI

Source Field

pmFtmSuccGsm

Source Section

CsdDigitalService

pmModemOFail

The total number of unsuccessful originating MANT WCDMA connections.

Data Source

RNC_RXI

Source Field

pmModemOFail

Source Section

CsdDigitalService

pmModemOFailGsm

The total number of unsuccessful originating MANT GSM connections.

Data Source

RNC_RXI

Source Field

pmModemOFailGsm

Source Section

CsdDigitalService

pmModemOSucc

The total number of successful originating MANT WCDMA connections.

Data Source

RNC_RXI

Source Field

pmModemOSucc

Source Section

CsdDigitalService

pmModemOSuccGsm

The total number of successful originating, MANT GSM connections.

Data Source

RNC_RXI

Source Field

pmModemOSuccGsm

Source Section

CsdDigitalService

pmModemTFail

The total number of unsuccessful terminating MANT WCDMA connections.

Data Source

RNC_RXI

Source Field

pmModemTFail

Source Section

CsdDigitalService

pmModemTFailGsm

The total number of unsuccessful terminating MANT GSM connections.

Data Source

RNC_RXI

Source Field

pmModemTFailGsm

Source Section

CsdDigitalService

pmModemTSuccGsm

The total number of successful terminating, MANT GSM connections.

Data Source

RNC_RXI

Source Field

pmModemTSuccGsm

Source Section

CsdDigitalService

pmNormalRelease

Total Number of normal device releases

Data Source

RNC_RXI

Source Field

pmNormalRelease

Source Section

CsdDigitalService

pmNumFtm

The current number of non-transparent FTM WCDMA connections.

Data Source

RNC_RXI

Source Field

pmNumFtm

Source Section

CsdDigitalService

pmNumFtmGsm

The current number of non-transparent FTM GSM connections.

Data Source

RNC_RXI

Source Field

pmNumFtmGsm

Source Section

CsdDigitalService

pmNumModemO

The current number of originating MANT WCDMA connections.

Data Source

RNC_RXI

Source Field

pmNumModemO

Source Section

CsdDigitalService

pmNumModemOGsm

The current number of originating MANT GSM connections

Data Source

RNC_RXI

Source Field

pmNumModemOGsm

Source Section

CsdDigitalService

pmNumModemT

The current number of of terminating MANT WCDMA connections.

Data Source

RNC_RXI

Source Field

pmNumModemT

Source Section

CsdDigitalService

pmNumModemTGsm

The current number of terminating MANT GSM connections.

Data Source

RNC_RXI

Source Field

pmNumModemTGsm

Source Section

CsdDigitalService

pmNumUdi

The current number of asynchronous non-transparent UDI WCDMA connections.

Data Source

RNC_RXI

Source Field

pmNumUdi

Source Section

CsdDigitalService

pmNumUdiGsm

The current number of asynchronous non-transparent Unrestricted Digital Information (UDI) GSM connections.

Data Source

RNC_RXI

Source Field

pmNumUdiGsm

Source Section

CsdDigitalService

pmTotalSeizures

The total number of seizure attempt of devices from this device Service.

Data Source

RNC_RXI

Source Field

pmTotalSeizures

Source Section

CsdDigitalService

pmUdiFail

The total number of unsuccessful asynchronous non-transparent UDI WCDMA connections.

Data Source

RNC_RXI

Source Field

pmUdiFail

Source Section

CsdDigitalService

pmUdiFailGsm

The total number of unsuccessful asynchronous non-transparent UDI GSM connections.

Data Source

RNC_RXI

Source Field

pmUdiFailGsm

Source Section

CsdDigitalService

pmUdiSucc

The total number of successful asynchronous non-transparent UDI WCDMA connections.

Data Source

RNC_RXI

Source Field

pmUdiSucc

Source Section

CsdDigitalService

pmUdiSuccGsm

The total number of successful asynchronous non-transparent UDI GSM connections.

Data Source

RNC_RXI

Source Field

pmUdiSuccGsm

Source Section

CsdDigitalService

pmUnsuccSeizures

The total number of failed seizure attempts due to congestion.

Data Source

RNC_RXI

Source Field

pmUnsuccSeizures

Source Section

CsdDigitalService

RNC_RELEASE

Release

Data Source

RNC_RXI

Source Field

RNC_RELEASE

Source Section

CsdDigitalService_Gen

CsdGsmFhService Primitive Calculations

The following is a list of primitive calculations for the CsdGsmFhService entity.

GRAPHmultiLineSeparator

Special Control Field for Multi-Line Graphs

Calculation

""

NUMDAYS

of days in Report

Calculation

```
DAYSINREPORT()
```

NUMHOURS

of hours in Summation Data

Calculation

p_Seizures_Sucess_Rate

Percentege of Seizures which are sucessful

Calculation

```
100.0 * vsum( pmTotalSeizures, -1 * pmUnsuccSeizures ) / pmTotalSeizures
```

CsdGsmFhService Peg Counts

The following is a list of peg counts for the CsdGsmFhService entity.

PERLENSEC

Period length in seconds

Data Source

RNC_RXI

Source Field

PERLENSEC

Source Section

CsdGsmFhService_Gen

pmBusyDevices

The current number of busy devices in the Service

Data Source

RNC_RXI

Source Field

pmBusyDevices

Source Section

CsdGsmFhService

pmForcedRelease

Total Number of forced device releases for ex due to spontaneous device fault

Data Source

RNC_RXI

Source Field

pmForcedRelease

Source Section

CsdGsmFhService

pmNormalRelease

Total Number of normal device releases

Data Source

RNC_RXI

Source Field

pmNormalRelease

Source Section

CsdGsmFhService

pmTotalSeizures

The total number of seizure attempt of devices from this device Service.

Data Source

RNC_RXI

Source Field

pmTotalSeizures

Source Section

CsdGsmFhService

pmUnsuccSeizures

The total number of failed seizure attempts due to congestion.

Data Source

RNC_RXI

Source Field

pmUnsuccSeizures

Source Section

CsdGsmFhService

RNC_RELEASE

Release

Data Source

RNC_RXI

Source Field

RNC_RELEASE

Source Section

CsdGsmFhService_Gen

CsdModemService Primitive Calculations

The following is a list of primitive calculations for the CsdModemService entity.

GRAPHmultiLineSeparator

Special Control Field for Multi-Line Graphs

Calculation

```
""
```

GSM_modem_connections

The total number of GSM modem connections

Calculation

```
vsum(pmAsyncNonTransModemGsm , pmAsyncTransModemGsm , pmSyncTransModemGsm)
```

NUMDAYS

of days in Report

Calculation

```
DAYSINREPORT()
```

NUMHOURS

of hours in Summation Data

Calculation

p_Device_Service_reservation_success

Device Service reservation success rate Healthy value:99 - 100%

Calculation

```
(1 - (pmUnsuccSeizures / pmTotalSeizures)) * 100.0
```

p_Seizures_Sucess_Rate

Percentege of Seizures which are sucessful

Calculation

```
100.0 * vsum( pmTotalSeizures, -1 * pmUnsuccSeizures ) / pmTotalSeizures
```

CsdModemService Peg Counts

The following is a list of peg counts for the CsdModemService entity.

PERLENSEC

Period length in seconds

Data Source

RNC_RXI

Source Field

PERLENSEC

Source Section

CsdModemService_Gen

pmAsyncNonTranModWcdma

The total number of modem MANT WCDMA connections.

Data Source

RNC_RXI

Source Field

pmAsyncNonTransModemWcdma

Source Section

CsdModemService

pmAsyncNonTransModemGsm

The total number of modem asynchronous non-transparent (MANT) GSM connections.

Data Source

RNC_RXI

Source Field

pmAsyncNonTransModemGsm

Source Section

CsdModemService

pmAsyncNonTransModemWcdma

The total number of modem MANT WCDMA connections.

Data Source

RNC_RXI

Source Field

pmAsyncNonTransModemWcdma

Source Section

CsdModemService

pmAsyncTransModemGsm

The total number of modem asynchronous transparent (MAT) GSM connections.

Data Source

RNC_RXI

Source Field

pmAsyncTransModemGsm

Source Section

CsdModemService

pmForcedRelease

Total Number of forced device releases for ex due to spontaneous device fault

Data Source

RNC_RXI

Source Field

pmForcedRelease

Source Section

CsdModemService

pmNormalRelease

Total Number of normal device releases

Data Source

RNC_RXI

Source Field

pmNormalRelease

Source Section

CsdModemService

pmSyncTransModemGsm

The total number of modem synchronous transparent (MST) GSM connections.

Data Source

RNC_RXI

Source Field

pmSyncTransModemGsm

Source Section

CsdModemService

pmTotalSeizures

The total number of seizure attempt of devices from this device Service.

Data Source

RNC_RXI

Source Field

pmTotalSeizures

Source Section

CsdModemService

pmUnsuccSeizures

The total number of failed seizure attempts due to congestion.

Data Source

RNC_RXI

Source Field

pmUnsuccSeizures

Source Section

CsdModemService

pmV21

The total number of V.21 WCDMA connections.

Data Source

RNC_RXI

Source Field

pmV21

Source Section

CsdModemService

pmV21Gsm

The total number of V.21 GSM connections.

Data Source

RNC_RXI

Source Field

pmV21Gsm

Source Section

CsdModemService

pmV22

The total number of V.22 WCDMA connections.

Data Source

RNC_RXI

Source Field

pmV22

Source Section

CsdModemService

pmV22bis

The total number of V.22bis WCDMA connections.

Data Source

RNC_RXI

Source Field

pmV22bis

Source Section

CsdModemService

pmV22bisGsm

The total number of V.22bis GSM connections.

Data Source

RNC_RXI

Source Field

pmV22bisGsm

Source Section

CsdModemService

pmV22Gsm

The total number of V.22 GSM connections.

Data Source

RNC_RXI

Source Field

pmV22Gsm

Source Section

CsdModemService

pmV32

The total number of V.32 WCDMA connections.

Data Source

RNC_RXI

Source Field

pmV32

Source Section

CsdModemService

pmV32Gsm

The total number of V.32 GSM connections.

Data Source

RNC_RXI

Source Field

pmV32Gsm

Source Section

CsdModemService

pmV34

The total number of V.34 WCDMA connections.

Data Source

RNC_RXI

Source Field

pmV34

Source Section

CsdModemService

pmV34Gsm

The total number of V.34 GSM connections.

Data Source

RNC_RXI

Source Field

pmV34Gsm

Source Section

CsdModemService

pmV90

The total number of V.90 WCDMA connections.

Data Source

RNC_RXI

Source Field

pmV90

Source Section

CsdModemService

pmV90Gsm

The total number of V.90 GSM connections.

Data Source

RNC_RXI

Source Field

pmV90Gsm

Source Section

CsdModemService

RNC_RELEASE

Release

Data Source

RNC_RXI

Source Field

RNC_RELEASE

Source Section

CsdModemService_Gen

DcDevice Primitive Calculations

The following is a list of primitive calculations for the DcDevice entity.

GRAPHmultiLineSeparator

Special Control Field for Multi-Line Graphs

Calculation

""

NUMDAYS

of days in Report

Calculation

```
DAYSINREPORT()
```

NUMHOURS

of hours in Summation Data

DcDevice Peg Counts

The following is a list of peg counts for the DcDevice entity.

PERLENSEC

Period Length

Data Source

RNC

Source Field

PERLENSEC

Source Section

DcDevice_RNC_WMGeneral

PERLENSEC_K

Period length in seconds aggregation summation in time domain and aggregation maximum between Network Elements.

Data Source

RNC

Source Field

PERLENSEC

Source Section

DcDevice_RNC_WMGeneral

pmSamplesMeasuredDcSpLoad

Number of samples recorded within the ROP period for "Level of the averaged measured load on the DC SP"

Data Source

RNC

Source Field

pmSamplesMeasuredDcSpLoad

Source Section

DcDevice

pmSumMeasuredDcSpLoad

Sum of all sample values recorded for "Level of the averaged measured load on the CC SP"

Data Source

RNC

Source Field

pmSumMeasuredDcSpLoad

Source Section

DcDevice

DcDevice_NodeB Primitive Calculations

The following is a list of primitive calculations for the DcDevice_NodeB entity.

GRAPHmultiLineSeparator

Special Control Field for Multi-Line Graphs

Calculation

```
""
```

NUMDAYS

of days in Report

Calculation

```
DAYSINREPORT()
```

Updated: 2009-07-22

NUMHOURS

of hours in Summation Data

Calculation

DcDevice_NodeB Peg Counts

The following is a list of peg counts for the DcDevice_NodeB entity.

PERLENSEC

Period Length

Data Source

NodeB_RXI

Source Field

PERLENSEC

Source Section

DcDevice_NodeB_WMGeneral

PERLENSEC_K

Period length in seconds aggregation summation in time domain and aggregation maximum between Network Elements.

Data Source

NodeB_RXI

Source Field

PERLENSEC

Source Section

DcDevice_NodeB_WMGeneral

RNC_RELEASE

Release

Data Source

NodeB_RXI

Source Section

DcDevice_NodeB

DcDevice_RNC Primitive Calculations

The following is a list of primitive calculations for the DcDevice_RNC entity.

GRAPHmultiLineSeparator

Special Control Field for Multi-Line Graphs

Calculation

```
""
```

NUMDAYS

of days in Report

Calculation

```
DAYSINREPORT()
```

NUMHOURS

of hours in Summation Data

Calculation

DcDevice_RNC Peg Counts

The following is a list of peg counts for the DcDevice_RNC entity.

PERLENSEC

Period Length

Data Source

RNC_RXI

Source Field

PERLENSEC

Source Section

DcDevice_RNC_WMGeneral

PERLENSEC_K

Period length in seconds aggregation summation in time domain and aggregation maximum between Network Elements.

Data Source

RNC_RXI

Source Field

PERLENSEC

Source Section

DcDevice_RNC_WMGeneral

pmSamplesMeasuredDcSpLoad

Number of samples recorded within the ROP period for "Level of the averaged measured load on the DC SP"

Data Source

RNC

Source Field

pmSamplesMeasuredDcSpLoad

Source Section

DcDevice

pmSumMeasuredDcSpLoad

Sum of all sample values recorded for "Level of the averaged measured load on the CC SP"

Data Source

RNC

Source Field

pmSumMeasuredDcSpLoad

Source Section

DcDevice

RNC_RELEASE

Release

Data Source

RNC_RXI

Source Section

DcDevice_RNC

DownlinkBaseBandPool Primitive Calculations

The following is a list of primitive calculations for the DownlinkBaseBandPool entity.

GRAPHmultiLineSeparator

Special Control Field for Multi-Line Graphs

Calculation

```
""
```

k_CE_DL_CONG

Number of setup failures due to TXB pool congestion

Calculation

```
vsum(pmNoOfRlAdditionFailuresSf8,pmNoOfRlAdditionFailuresSf16,pmNoOfRlAdditionFailuresSf32,pmNoOfRlAdditionFailuresSf128)
```

NUMDAYS

of days in Report

Calculation

```
DAYSINREPORT()
```

NUMHOURS

of hours in Summation Data

Calculation

DownlinkBaseBandPool Peg Counts

The following is a list of peg counts for the DownlinkBaseBandPool entity.

NodeB_RELEASE

Release

Data Source

NodeB_RNC_RXI

Source Section

DownlinkBaseBandPool

PERLENSEC

Period Length

Data Source

NodeB_RNC_RXI

Source Field

perlensec

Source Section

DownlinkBaseBandPool_WMGeneral

PERLENSEC_K

Period length in seconds aggregation summation in time domain and aggregation maximum between Network Elements.

Data Source

NodeB_RNC

Source Field

perlensec

Source Section

DownlinkBaseBandPool_WMGeneral

pmAllocRejADch

The number of attempts to allocate resources for new HS-DSCH user that is rejected due to lack of A-DCH resources.

Data Source

NodeB_RNC_RXI

Source Field

pmAllocRejADch

Source Section

DownlinkBaseBandPool

pmApomcOfMdlr

(Removed in RP14.2)Average percentage of maximum capacity for Mixed DL Link Rate on the DL baseband pool.

Data Source

NodeB_RNC_RXI

Source Field

pmApomcOfMdlr

Source Section

DownlinkBaseBandPool

pmApomcOfMdsr

(Removed in RP14.2)Average percentage of maximum capacity for Mixed DL Service Rate on the DL baseband pool.

Data Source

NodeB_RNC_RXI

Source Field

pmApomcOfMdsr

Source Section

DownlinkBaseBandPool

pmApomcOfSpreadersUsed

(Removed in RP14.2)Average percentage of maximum capacity for number of Spreaders used in the DL baseband pool.

Data Source

NodeB_RNC_RXI

Source Field

pmApomcOfSpreadersUsed

Source Section

DownlinkBaseBandPool

pmCapacityAllocAttDlCe

The number of attempts to allocate DL Channel Elements.

Data Source

NodeB_RNC_RXI

Source Field

pmCapacityAllocAttDlCe

Source Section

DownlinkBaseBandPool

pmCapacityAllocRejDlCe

The number of attempts to allocate DL Channel Elements that are rejected (related to bin [0] of pmCapacityDlCe).

Data Source

NodeB_RNC_RXI

Source Field

pmCapacityAllocRejDlCe

Source Section

DownlinkBaseBandPool

pmCapacityDlCe_00

The distribution of the DL Channel Element utilization, as percentages of the license limit for the DownlinkBaseBandPool. If two baseband pools are used, the licensed capacity of DL Channel Elements is distributed between the two baseband pools according to the parameter NodeBFunction::dlLicFractBBPool2. The licensed capacity is not distributed at delayed activation of license key, at emergency unlock, when the license key value is 9999, and when license key is invalid/missing. Range: Configured license limit

Data Source

NodeB_RNC_RXI

Source Field

pmCapacityDlCe

Source Section

DownlinkBaseBandPool

pmCapacityDlCe_01

The distribution of the DL Channel Element utilization, as percentages of the license limit for the DownlinkBaseBandPool. If two baseband pools are used, the licensed capacity of DL Channel Elements is distributed between the two baseband pools according to the parameter NodeBFunction::dlLicFractBBPool2. The licensed capacity is not distributed at delayed activation of license key, at emergency unlock, when the license key value is 9999, and when license key is invalid/missing. Range: Number of sampled value in range 0..20%

Data Source

NodeB_RNC_RXI

Source Field

pmCapacityDlCe

Source Section

DownlinkBaseBandPool

pmCapacityDlCe_02

The distribution of the DL Channel Element utilization, as percentages of the license limit for the DownlinkBaseBandPool. If two baseband pools are used, the licensed capacity of DL Channel Elements is distributed between the two baseband pools according to the parameter NodeBFunction::dlLicFractBBPool2. The licensed capacity is not distributed at delayed activation of license key, at emergency unlock, when the license key value is 9999, and when license key is invalid/missing. Range: Number of sampled value in range 20..40%

Data Source

NodeB_RNC_RXI

Source Field

pmCapacityDlCe

Source Section

DownlinkBaseBandPool

pmCapacityDlCe_03

The distribution of the DL Channel Element utilization, as percentages of the license limit for the DownlinkBaseBandPool. If two baseband pools are used, the licensed capacity of DL Channel Elements is distributed between the two baseband pools according to the parameter NodeBFunction::dlLicFractBBPool2. The licensed capacity is not distributed at delayed activation of license key, at emergency unlock, when the license key value is 9999, and when license key is invalid/missing. Range: Number of sampled value in range 40..50%

Data Source

NodeB_RNC_RXI

Source Field

pmCapacityDlCe

Source Section

DownlinkBaseBandPool

pmCapacityDlCe_04

The distribution of the DL Channel Element utilization, as percentages of the license limit for the DownlinkBaseBandPool. If two baseband pools are used, the licensed capacity of DL Channel Elements is distributed between the two baseband pools according to the parameter NodeBFunction::dlLicFractBBPool2. The licensed capacity is not distributed at delayed activation of license key, at emergency unlock, when the license key value is 9999, and when license key is invalid/missing. Range: Number of sampled value in range 50..60%

Data Source

NodeB_RNC_RXI

Source Field

pmCapacityDlCe

Source Section

DownlinkBaseBandPool

pmCapacityDlCe_05

The distribution of the DL Channel Element utilization, as percentages of the license limit for the DownlinkBaseBandPool. If two baseband pools are used, the licensed capacity of DL Channel Elements is distributed between the two baseband pools according to the parameter NodeBFunction::dlLicFractBBPool2. The licensed capacity is not distributed at delayed activation of license key, at emergency unlock, when the license key value is 9999, and when license key is invalid/missing. Range: Number of sampled value in range 60..70%

Data Source

NodeB_RNC_RXI

Source Field

pmCapacityDlCe

Source Section

DownlinkBaseBandPool

pmCapacityDlCe_06

The distribution of the DL Channel Element utilization, as percentages of the license limit for the DownlinkBaseBandPool. If two baseband pools are used, the licensed capacity of DL Channel Elements is distributed between the two baseband pools according to the parameter NodeBFunction::dlLicFractBBPool2. The licensed capacity is not distributed at delayed activation of license key, at emergency unlock, when the license key value is 9999, and when license key is invalid/missing. Range: Number of sampled value in range 70..80%

Data Source

NodeB_RNC_RXI

Source Field

pmCapacityDlCe

Source Section

DownlinkBaseBandPool

pmCapacityDlCe_07

The distribution of the DL Channel Element utilization, as percentages of the license limit for the DownlinkBaseBandPool. If two baseband pools are used, the licensed capacity of DL

Channel Elements is distributed between the two baseband pools according to the parameter NodeBFunction::dlLicFractBBPool2. The licensed capacity is not distributed at delayed activation of license key, at emergency unlock, when the license key value is 9999, and when license key is invalid/missing. Range: Number of sampled value in range 80..85%

Data Source

NodeB_RNC_RXI

Source Field

pmCapacityDlCe

Source Section

DownlinkBaseBandPool

pmCapacityDlCe_08

The distribution of the DL Channel Element utilization, as percentages of the license limit for the DownlinkBaseBandPool. If two baseband pools are used, the licensed capacity of DL Channel Elements is distributed between the two baseband pools according to the parameter NodeBFunction::dlLicFractBBPool2. The licensed capacity is not distributed at delayed activation of license key, at emergency unlock, when the license key value is 9999, and when license key is invalid/missing. Range: Number of sampled value in range 85..90%

Data Source

NodeB_RNC_RXI

Source Field

pmCapacityDlCe

Source Section

DownlinkBaseBandPool

pmCapacityDlCe_09

The distribution of the DL Channel Element utilization, as percentages of the license limit for the DownlinkBaseBandPool. If two baseband pools are used, the licensed capacity of DL Channel Elements is distributed between the two baseband pools according to the parameter NodeBFunction::dlLicFractBBPool2. The licensed capacity is not distributed at delayed activation of license key, at emergency unlock, when the license key value is 9999, and when license key is invalid/missing. Range: Number of sampled value in range 90..95%

Data Source

NodeB_RNC_RXI

Source Field

pmCapacityDlCe

Source Section

DownlinkBaseBandPool

pmCapacityDlCe_10

The distribution of the DL Channel Element utilization, as percentages of the license limit for the DownlinkBaseBandPool. If two baseband pools are used, the licensed capacity of DL Channel Elements is distributed between the two baseband pools according to the parameter NodeBFunction::dlLicFractBBPool2. The licensed capacity is not distributed at delayed activation of license key, at emergency unlock, when the license key value is 9999, and when license key is invalid/missing. Range: Number of sampled value in range >=95%

Data Source

NodeB_RNC_RXI

Source Field

pmCapacityDlCe

Source Section

DownlinkBaseBandPool

pmDIActPeakCapUsage

The actual DL peak capacity use in the Downlink baseband pool during the GP.

Data Source

NodeB

pmNoOfRadioLinksSf128_00

Number of RadioLinks in use (SF128) (minute 1 of 15)

Data Source

NodeB_RNC_RXI

Source Field

pmNoOfRadioLinksSf128

Source Section

DownlinkBaseBandPool

pmNoOfRadioLinksSf128_01

Number of RadioLinks in use (SF128) (minute 2 of 15)

Data Source

NodeB_RNC_RXI

Source Field

pmNoOfRadioLinksSf128

Source Section

DownlinkBaseBandPool

pmNoOfRadioLinksSf128_02

Number of RadioLinks in use (SF128) (minute 3 of 15)

Data Source

NodeB_RNC_RXI

Source Field

pmNoOfRadioLinksSf128

Source Section

DownlinkBaseBandPool

pmNoOfRadioLinksSf128_03

Number of RadioLinks in use (SF128) (minute 4 of 15)

Data Source

NodeB_RNC_RXI

Source Field

pmNoOfRadioLinksSf128

Source Section

DownlinkBaseBandPool

pmNoOfRadioLinksSf128_04

Number of RadioLinks in use (SF128) (minute 5 of 15)

Data Source

NodeB_RNC_RXI

Source Field

pmNoOfRadioLinksSf128

Source Section

DownlinkBaseBandPool

pmNoOfRadioLinksSf128_05

Number of RadioLinks in use (SF128) (minute 6 of 15)

Data Source

NodeB_RNC_RXI

Source Field

pmNoOfRadioLinksSf128

Source Section

DownlinkBaseBandPool

pmNoOfRadioLinksSf128_06

Number of RadioLinks in use (SF128) (minute 7 of 15)

Data Source

NodeB_RNC_RXI

Source Field

pmNoOfRadioLinksSf128

Source Section

DownlinkBaseBandPool

pmNoOfRadioLinksSf128_07

Number of RadioLinks in use (SF128) (minute 8 of 15)

Data Source

NodeB_RNC_RXI

Source Field

pmNoOfRadioLinksSf128

Source Section

DownlinkBaseBandPool

pmNoOfRadioLinksSf128_08

Number of RadioLinks in use (SF128) (minute 9 of 15)

Data Source

NodeB_RNC_RXI

Source Field

pmNoOfRadioLinksSf128

Source Section

DownlinkBaseBandPool

pmNoOfRadioLinksSf128_09

Number of RadioLinks in use (SF128) (minute 10 of 15)

Data Source

NodeB_RNC_RXI

Source Field

pmNoOfRadioLinksSf128

Source Section

DownlinkBaseBandPool

pmNoOfRadioLinksSf128_10

Number of RadioLinks in use (SF128) (minute 11 of 15)

Data Source

NodeB_RNC_RXI

Source Field

pmNoOfRadioLinksSf128

Source Section

DownlinkBaseBandPool

pmNoOfRadioLinksSf128_11

Number of RadioLinks in use (SF128) (minute 12 of 15)

Data Source

NodeB_RNC_RXI

Source Field

pmNoOfRadioLinksSf128

Source Section

DownlinkBaseBandPool

pmNoOfRadioLinksSf128_12

Number of RadioLinks in use (SF128) (minute 13 of 15)

Data Source

NodeB_RNC_RXI

Source Field

pmNoOfRadioLinksSf128

Source Section

DownlinkBaseBandPool

pmNoOfRadioLinksSf128_13

Number of RadioLinks in use (SF128) (minute 14 of 15)

Data Source

NodeB_RNC_RXI

Source Field

pmNoOfRadioLinksSf128

Source Section

DownlinkBaseBandPool

pmNoOfRadioLinksSf128_14

Number of RadioLinks in use (SF128) (minute 15 of 15)

Data Source

NodeB_RNC_RXI

Source Field

pmNoOfRadioLinksSf128

Source Section

DownlinkBaseBandPool

pmNoOfRadioLinksSf16_00

Number of RadioLinks in use (SF16) (minute 1 of 15)

Data Source

NodeB_RNC_RXI

Source Field

pmNoOfRadioLinksSf16

Source Section

DownlinkBaseBandPool

pmNoOfRadioLinksSf16_01

Number of RadioLinks in use (SF16) (minute 2 of 15)

Data Source

NodeB_RNC_RXI

Source Field

pmNoOfRadioLinksSf16

Source Section

DownlinkBaseBandPool

pmNoOfRadioLinksSf16_02

Number of RadioLinks in use (SF16) (minute 3 of 15)

Data Source

NodeB_RNC_RXI

Source Field

pmNoOfRadioLinksSf16

Source Section

DownlinkBaseBandPool

pmNoOfRadioLinksSf16_03

Number of RadioLinks in use (SF16) (minute 4 of 15)

Data Source

NodeB_RNC_RXI

Source Field

pmNoOfRadioLinksSf16

Source Section

DownlinkBaseBandPool

pmNoOfRadioLinksSf16_04

Number of RadioLinks in use (SF16) (minute 5 of 15)

Data Source

NodeB_RNC_RXI

Source Field

pmNoOfRadioLinksSf16

Source Section

DownlinkBaseBandPool

pmNoOfRadioLinksSf16_05

Number of RadioLinks in use (SF16) (minute 6 of 15)

Data Source

NodeB_RNC_RXI

Source Field

pmNoOfRadioLinksSf16

Source Section

DownlinkBaseBandPool

pmNoOfRadioLinksSf16_06

Number of RadioLinks in use (SF16) (minute 7 of 15)

Data Source

NodeB_RNC_RXI

Source Field

pmNoOfRadioLinksSf16

Source Section

DownlinkBaseBandPool

pmNoOfRadioLinksSf16_07

Number of RadioLinks in use (SF16) (minute 8 of 15)

Data Source

NodeB_RNC_RXI

Source Field

pmNoOfRadioLinksSf16

Source Section

DownlinkBaseBandPool

pmNoOfRadioLinksSf16_08

Number of RadioLinks in use (SF16) (minute 9 of 15)

Data Source

NodeB_RNC_RXI

Source Field

pmNoOfRadioLinksSf16

Source Section

DownlinkBaseBandPool

pmNoOfRadioLinksSf16_09

Number of RadioLinks in use (SF16) (minute 10 of 15)

Data Source

NodeB_RNC_RXI

Source Field

pmNoOfRadioLinksSf16

Source Section

DownlinkBaseBandPool

pmNoOfRadioLinksSf16_10

Number of RadioLinks in use (SF16) (minute 11 of 15)

Data Source

NodeB_RNC_RXI

Source Field

pmNoOfRadioLinksSf16

Source Section

DownlinkBaseBandPool

pmNoOfRadioLinksSf16_11

Number of RadioLinks in use (SF16) (minute 12 of 15)

Data Source

NodeB_RNC_RXI

Source Field

pmNoOfRadioLinksSf16

Source Section

DownlinkBaseBandPool

pmNoOfRadioLinksSf16_12

Number of RadioLinks in use (SF16) (minute 13 of 15)

Data Source

NodeB_RNC_RXI

Source Field

pmNoOfRadioLinksSf16

Source Section

DownlinkBaseBandPool

pmNoOfRadioLinksSf16_13

Number of RadioLinks in use (SF16) (minute 14 of 15)

Data Source

NodeB_RNC_RXI

Source Field

pmNoOfRadioLinksSf16

Source Section

DownlinkBaseBandPool

pmNoOfRadioLinksSf16_14

Number of RadioLinks in use (SF16) (minute 15 of 15)

Data Source

NodeB_RNC_RXI

Source Field

pmNoOfRadioLinksSf16

Source Section

DownlinkBaseBandPool

pmNoOfRadioLinksSf256_00

Number of RadioLinks in use (SF256) (minute 1 of 15)

Data Source

NodeB_RNC_RXI

Source Field

pmNoOfRadioLinksSf256

Source Section

DownlinkBaseBandPool

pmNoOfRadioLinksSf256_01

Number of RadioLinks in use (SF256) (minute 2 of 15)

Data Source

NodeB_RNC_RXI

Source Field

pmNoOfRadioLinksSf256

Source Section

DownlinkBaseBandPool

pmNoOfRadioLinksSf256_02

Number of RadioLinks in use (SF256) (minute 3 of 15)

Data Source

NodeB_RNC_RXI

Source Field

pmNoOfRadioLinksSf256

Source Section

DownlinkBaseBandPool

pmNoOfRadioLinksSf256_03

Number of RadioLinks in use (SF256) (minute 4 of 15)

Data Source

NodeB_RNC_RXI

Source Field

pmNoOfRadioLinksSf256

Source Section

DownlinkBaseBandPool

pmNoOfRadioLinksSf256_04

Number of RadioLinks in use (SF256) (minute 5 of 15)

Data Source

NodeB_RNC_RXI

Source Field

pmNoOfRadioLinksSf256

Source Section

DownlinkBaseBandPool

pmNoOfRadioLinksSf256_05

Number of RadioLinks in use (SF256) (minute 6 of 15)

Data Source

NodeB_RNC_RXI

Source Field

pmNoOfRadioLinksSf256

Source Section

DownlinkBaseBandPool

pmNoOfRadioLinksSf256_06

Number of RadioLinks in use (SF256) (minute 7 of 15)

Data Source

NodeB_RNC_RXI

Source Field

pmNoOfRadioLinksSf256

Source Section

DownlinkBaseBandPool

pmNoOfRadioLinksSf256_07

Number of RadioLinks in use (SF256) (minute 8 of 15)

Data Source

NodeB_RNC_RXI

Source Field

pmNoOfRadioLinksSf256

Source Section

DownlinkBaseBandPool

pmNoOfRadioLinksSf256_08

Number of RadioLinks in use (SF256) (minute 9 of 15)

Data Source

NodeB_RNC_RXI

Source Field

pmNoOfRadioLinksSf256

Source Section

DownlinkBaseBandPool

pmNoOfRadioLinksSf256_09

Number of RadioLinks in use (SF256) (minute 10 of 15)

Data Source

NodeB_RNC_RXI

Source Field

pmNoOfRadioLinksSf256

Source Section

DownlinkBaseBandPool

pmNoOfRadioLinksSf256_10

Number of RadioLinks in use (SF256) (minute 11 of 15)

Data Source

NodeB_RNC_RXI

Source Field

pmNoOfRadioLinksSf256

Source Section

DownlinkBaseBandPool

pmNoOfRadioLinksSf256_11

Number of RadioLinks in use (SF256) (minute 12 of 15)

Data Source

NodeB_RNC_RXI

Source Field

pmNoOfRadioLinksSf256

Source Section

DownlinkBaseBandPool

pmNoOfRadioLinksSf256_12

Number of RadioLinks in use (SF256) (minute 13 of 15)

Data Source

NodeB_RNC_RXI

Source Field

pmNoOfRadioLinksSf256

Source Section

DownlinkBaseBandPool

pmNoOfRadioLinksSf256_13

Number of RadioLinks in use (SF256) (minute 14 of 15)

Data Source

NodeB_RNC_RXI

Source Field

pmNoOfRadioLinksSf256

Source Section

DownlinkBaseBandPool

pmNoOfRadioLinksSf256_14

Number of RadioLinks in use (SF256) (minute 15 of 15)

Data Source

NodeB_RNC_RXI

Source Field

pmNoOfRadioLinksSf256

Source Section

DownlinkBaseBandPool

pmNoOfRadioLinksSf32_00

Number of RadioLinks in use (SF32) (minute 1 of 15)

Data Source

NodeB_RNC_RXI

Source Field

pmNoOfRadioLinksSf32

Source Section

DownlinkBaseBandPool

pmNoOfRadioLinksSf32_01

Number of RadioLinks in use (SF32) (minute 2 of 15)

Data Source

NodeB_RNC_RXI

Source Field

pmNoOfRadioLinksSf32

Source Section

DownlinkBaseBandPool

pmNoOfRadioLinksSf32_02

Number of RadioLinks in use (SF32) (minute 3 of 15)

Data Source

NodeB_RNC_RXI

Source Field

pmNoOfRadioLinksSf32

Source Section

DownlinkBaseBandPool

pmNoOfRadioLinksSf32_03

Number of RadioLinks in use (SF32) (minute 4 of 15)

Data Source

NodeB_RNC_RXI

Source Field

pmNoOfRadioLinksSf32

Source Section

DownlinkBaseBandPool

pmNoOfRadioLinksSf32_04

Number of RadioLinks in use (SF32) (minute 5 of 15)

Data Source

NodeB_RNC_RXI

Source Field

pmNoOfRadioLinksSf32

Source Section

DownlinkBaseBandPool

pmNoOfRadioLinksSf32_05

Number of RadioLinks in use (SF32) (minute 6 of 15)

Data Source

NodeB_RNC_RXI

Source Field

pmNoOfRadioLinksSf32

Source Section

DownlinkBaseBandPool

pmNoOfRadioLinksSf32_06

Number of RadioLinks in use (SF32) (minute 7 of 15)

Data Source

NodeB_RNC_RXI

Source Field

pmNoOfRadioLinksSf32

Source Section

DownlinkBaseBandPool

pmNoOfRadioLinksSf32_07

Number of RadioLinks in use (SF32) (minute 8 of 15)

Data Source

NodeB_RNC_RXI

Source Field

pmNoOfRadioLinksSf32

Source Section

DownlinkBaseBandPool

pmNoOfRadioLinksSf32_08

Number of RadioLinks in use (SF32) (minute 9 of 15)

Data Source

NodeB_RNC_RXI

Source Field

pmNoOfRadioLinksSf32

Source Section

DownlinkBaseBandPool

pmNoOfRadioLinksSf32_09

Number of RadioLinks in use (SF32) (minute 10 of 15)

Data Source

NodeB_RNC_RXI

Source Field

pmNoOfRadioLinksSf32

Source Section

DownlinkBaseBandPool

pmNoOfRadioLinksSf32_10

Number of RadioLinks in use (SF32) (minute 11 of 15)

Data Source

NodeB_RNC_RXI

Source Field

pmNoOfRadioLinksSf32

Source Section

DownlinkBaseBandPool

pmNoOfRadioLinksSf32_11

Number of RadioLinks in use (SF32) (minute 12 of 15)

Data Source

NodeB_RNC_RXI

Source Field

pmNoOfRadioLinksSf32

Source Section

DownlinkBaseBandPool

pmNoOfRadioLinksSf32_12

Number of RadioLinks in use (SF32) (minute 13 of 15)

Data Source

NodeB_RNC_RXI

Source Field

pmNoOfRadioLinksSf32

Source Section

DownlinkBaseBandPool

pmNoOfRadioLinksSf32_13

Number of RadioLinks in use (SF32) (minute 14 of 15)

Data Source

NodeB_RNC_RXI

Source Field

pmNoOfRadioLinksSf32

Source Section

DownlinkBaseBandPool

pmNoOfRadioLinksSf32_14

Number of RadioLinks in use (SF32) (minute 15 of 15)

Data Source

NodeB_RNC_RXI

Source Field

pmNoOfRadioLinksSf32

Source Section

DownlinkBaseBandPool

pmNoOfRadioLinksSf4_00

Number of RadioLinks in use (SF4) (minute 1 of 15)

Data Source

NodeB_RNC_RXI

Source Field

pmNoOfRadioLinksSf4

Source Section

DownlinkBaseBandPool

pmNoOfRadioLinksSf4_01

Number of RadioLinks in use (SF4) (minute 2 of 15)

Data Source

NodeB_RNC_RXI

Source Field

pmNoOfRadioLinksSf4

Source Section

DownlinkBaseBandPool

pmNoOfRadioLinksSf4_02

Number of RadioLinks in use (SF4) (minute 3 of 15)

Data Source

NodeB_RNC_RXI

Source Field

pmNoOfRadioLinksSf4

Source Section

DownlinkBaseBandPool

pmNoOfRadioLinksSf4_03

Number of RadioLinks in use (SF4) (minute 4 of 15)

Data Source

NodeB_RNC_RXI

Source Field

pmNoOfRadioLinksSf4

Source Section

DownlinkBaseBandPool

pmNoOfRadioLinksSf4_04

Number of RadioLinks in use (SF4) (minute 5 of 15)

Data Source

NodeB_RNC_RXI

Source Field

pmNoOfRadioLinksSf4

Source Section

DownlinkBaseBandPool

pmNoOfRadioLinksSf4_05

Number of RadioLinks in use (SF4) (minute 6 of 15)

Data Source

NodeB_RNC_RXI

Source Field

pmNoOfRadioLinksSf4

Source Section

DownlinkBaseBandPool

pmNoOfRadioLinksSf4_06

Number of RadioLinks in use (SF4) (minute 7 of 15)

Data Source

NodeB_RNC_RXI

Source Field

pmNoOfRadioLinksSf4

Source Section

DownlinkBaseBandPool

pmNoOfRadioLinksSf4_07

Number of RadioLinks in use (SF4) (minute 8 of 15)

Data Source

NodeB_RNC_RXI

Source Field

pmNoOfRadioLinksSf4

Source Section

DownlinkBaseBandPool

pmNoOfRadioLinksSf4_08

Number of RadioLinks in use (SF4) (minute 9 of 15)

Data Source

NodeB_RNC_RXI

Source Field

pmNoOfRadioLinksSf4

Source Section

DownlinkBaseBandPool

pmNoOfRadioLinksSf4_09

Number of RadioLinks in use (SF4) (minute 10 of 15)

Data Source

NodeB_RNC_RXI

Source Field

pmNoOfRadioLinksSf4

Source Section

DownlinkBaseBandPool

pmNoOfRadioLinksSf4_10

Number of RadioLinks in use (SF4) (minute 11 of 15)

Data Source

NodeB_RNC_RXI

Source Field

pmNoOfRadioLinksSf4

Source Section

DownlinkBaseBandPool

pmNoOfRadioLinksSf4_11

Number of RadioLinks in use (SF4) (minute 12 of 15)

Data Source

NodeB_RNC_RXI

Source Field

pmNoOfRadioLinksSf4

Source Section

DownlinkBaseBandPool

pmNoOfRadioLinksSf4_12

Number of RadioLinks in use (SF4) (minute 13 of 15)

Data Source

NodeB_RNC_RXI

Source Field

pmNoOfRadioLinksSf4

Source Section

DownlinkBaseBandPool

pmNoOfRadioLinksSf4_13

Number of RadioLinks in use (SF4) (minute 14 of 15)

Data Source

NodeB_RNC_RXI

Source Field

pmNoOfRadioLinksSf4

Source Section

DownlinkBaseBandPool

pmNoOfRadioLinksSf4_14

Number of RadioLinks in use (SF4) (minute 15 of 15)

Data Source

NodeB_RNC_RXI

Source Field

pmNoOfRadioLinksSf4

Source Section

DownlinkBaseBandPool

pmNoOfRadioLinksSf64_00

Number of RadioLinks in use (SF64) (minute 1 of 15)

Data Source

NodeB_RNC_RXI

Source Field

pmNoOfRadioLinksSf64

Source Section

DownlinkBaseBandPool

pmNoOfRadioLinksSf64_01

Number of RadioLinks in use (SF64) (minute 2 of 15)

Data Source

NodeB_RNC_RXI

Source Field

pmNoOfRadioLinksSf64

Source Section

DownlinkBaseBandPool

pmNoOfRadioLinksSf64_02

Number of RadioLinks in use (SF64) (minute 3 of 15)

Data Source

NodeB_RNC_RXI

Source Field

pmNoOfRadioLinksSf64

Source Section

DownlinkBaseBandPool

pmNoOfRadioLinksSf64_03

Number of RadioLinks in use (SF64) (minute 4 of 15)

Data Source

NodeB_RNC_RXI

Source Field

pmNoOfRadioLinksSf64

Source Section

DownlinkBaseBandPool

pmNoOfRadioLinksSf64_04

Number of RadioLinks in use (SF64) (minute 5 of 15)

Data Source

NodeB_RNC_RXI

Source Field

pmNoOfRadioLinksSf64

Source Section

DownlinkBaseBandPool

pmNoOfRadioLinksSf64_05

Number of RadioLinks in use (SF64) (minute 6 of 15)

Data Source

NodeB_RNC_RXI

Source Field

pmNoOfRadioLinksSf64

Source Section

DownlinkBaseBandPool

pmNoOfRadioLinksSf64_06

Number of RadioLinks in use (SF64) (minute 7 of 15)

Data Source

NodeB_RNC_RXI

Source Field

pmNoOfRadioLinksSf64

Source Section

DownlinkBaseBandPool

pmNoOfRadioLinksSf64_07

Number of RadioLinks in use (SF64) (minute 8 of 15)

Data Source

NodeB_RNC_RXI

Source Field

pmNoOfRadioLinksSf64

Source Section

DownlinkBaseBandPool

pmNoOfRadioLinksSf64_08

Number of RadioLinks in use (SF64) (minute 9 of 15)

Data Source

NodeB_RNC_RXI

Source Field

pmNoOfRadioLinksSf64

Source Section

DownlinkBaseBandPool

pmNoOfRadioLinksSf64_09

Number of RadioLinks in use (SF64) (minute 10 of 15)

Data Source

NodeB_RNC_RXI

Source Field

pmNoOfRadioLinksSf64

Source Section

DownlinkBaseBandPool

pmNoOfRadioLinksSf64_10

Number of RadioLinks in use (SF64) (minute 11 of 15)

Data Source

NodeB_RNC_RXI

Source Field

pmNoOfRadioLinksSf64

Source Section

DownlinkBaseBandPool

pmNoOfRadioLinksSf64_11

Number of RadioLinks in use (SF64) (minute 12 of 15)

Data Source

NodeB_RNC_RXI

Source Field

pmNoOfRadioLinksSf64

Source Section

DownlinkBaseBandPool

pmNoOfRadioLinksSf64_12

Number of RadioLinks in use (SF64) (minute 13 of 15)

Data Source

NodeB_RNC_RXI

Source Field

pmNoOfRadioLinksSf64

Source Section

DownlinkBaseBandPool

pmNoOfRadioLinksSf64_13

Number of RadioLinks in use (SF64) (minute 14 of 15)

Data Source

NodeB_RNC_RXI

Source Field

pmNoOfRadioLinksSf64

Source Section

DownlinkBaseBandPool

pmNoOfRadioLinksSf64_14

Number of RadioLinks in use (SF64) (minute 15 of 15)

Data Source

NodeB_RNC_RXI

Source Field

pmNoOfRadioLinksSf64

Source Section

DownlinkBaseBandPool

pmNoOfRadioLinksSf8_00

Number of RadioLinks in use (SF8) (minute 1 of 15)

Data Source

NodeB_RNC_RXI

Source Field

pmNoOfRadioLinksSf8

Source Section

DownlinkBaseBandPool

pmNoOfRadioLinksSf8_01

Number of RadioLinks in use (SF8) (minute 2 of 15)

Data Source

NodeB_RNC_RXI

Source Field

pmNoOfRadioLinksSf8

Source Section

DownlinkBaseBandPool

pmNoOfRadioLinksSf8_02

Number of RadioLinks in use (SF8) (minute 3 of 15)

Data Source

NodeB_RNC_RXI

Source Field

pmNoOfRadioLinksSf8

Source Section

DownlinkBaseBandPool

pmNoOfRadioLinksSf8_03

Number of RadioLinks in use (SF8) (minute 4 of 15)

Data Source

NodeB_RNC_RXI

Source Field

pmNoOfRadioLinksSf8

Source Section

DownlinkBaseBandPool

pmNoOfRadioLinksSf8_04

Number of RadioLinks in use (SF8) (minute 5 of 15)

Data Source

NodeB_RNC_RXI

Source Field

pmNoOfRadioLinksSf8

Source Section

DownlinkBaseBandPool

pmNoOfRadioLinksSf8_05

Number of RadioLinks in use (SF8) (minute 6 of 15)

Data Source

NodeB_RNC_RXI

Source Field

pmNoOfRadioLinksSf8

Source Section

DownlinkBaseBandPool

pmNoOfRadioLinksSf8_06

Number of RadioLinks in use (SF8) (minute 7 of 15)

Data Source

NodeB_RNC_RXI

Source Field

pmNoOfRadioLinksSf8

Source Section

DownlinkBaseBandPool

pmNoOfRadioLinksSf8_07

Number of RadioLinks in use (SF8) (minute 8 of 15)

Data Source

NodeB_RNC_RXI

Source Field

pmNoOfRadioLinksSf8

Source Section

DownlinkBaseBandPool

pmNoOfRadioLinksSf8_08

Number of RadioLinks in use (SF8) (minute 9 of 15)

Data Source

NodeB_RNC_RXI

Source Field

pmNoOfRadioLinksSf8

Source Section

DownlinkBaseBandPool

pmNoOfRadioLinksSf8_09

Number of RadioLinks in use (SF8) (minute 10 of 15)

Data Source

NodeB_RNC_RXI

Source Field

pmNoOfRadioLinksSf8

Source Section

DownlinkBaseBandPool

pmNoOfRadioLinksSf8_10

Number of RadioLinks in use (SF8) (minute 11 of 15)

Data Source

NodeB_RNC_RXI

Source Field

pmNoOfRadioLinksSf8

Source Section

DownlinkBaseBandPool

pmNoOfRadioLinksSf8_11

Number of RadioLinks in use (SF8) (minute 12 of 15)

Data Source

NodeB_RNC_RXI

Source Field

pmNoOfRadioLinksSf8

Source Section

DownlinkBaseBandPool

pmNoOfRadioLinksSf8_12

Number of RadioLinks in use (SF8) (minute 13 of 15)

Data Source

NodeB_RNC_RXI

Source Field

pmNoOfRadioLinksSf8

Source Section

DownlinkBaseBandPool

pmNoOfRadioLinksSf8_13

Number of RadioLinks in use (SF8) (minute 14 of 15)

Data Source

NodeB_RNC_RXI

Source Field

pmNoOfRadioLinksSf8

Source Section

DownlinkBaseBandPool

pmNoOfRadioLinksSf8_14

Number of RadioLinks in use (SF8) (minute 15 of 15)

Data Source

NodeB_RNC_RXI

Source Field

pmNoOfRadioLinksSf8

Source Section

DownlinkBaseBandPool

pmNoOfRlAdditionFailuresSf128

The number of RL addition fail due to TXB congestion. Spreading Factor 128

Data Source

NodeB_RNC_RXI

Source Field

pmNoOfRlAdditionFailuresSf128

Source Section

DownlinkBaseBandPool

pmNoOfRlAdditionFailuresSf16

The number of RL addition fail due to TXB congestion. Spreading Factor 16

Data Source

NodeB_RNC_RXI

Source Field

pmNoOfRlAdditionFailuresSf16

Source Section

DownlinkBaseBandPool

pmNoOfRlAdditionFailuresSf256

The number of RL addition fail due to TXB congestion. Spreading Factor 256

Data Source

NodeB_RNC_RXI

Source Field

pmNoOfRlAdditionFailuresSf256

Source Section

DownlinkBaseBandPool

pmNoOfRlAdditionFailuresSf32

The number of RL addition fail due to TXB congestion. Spreading Factor 32

Data Source

NodeB_RNC_RXI

Source Field

pmNoOfRlAdditionFailuresSf32

Source Section

DownlinkBaseBandPool

pmNoOfRlAdditionFailuresSf4

The number of RL addition fail due to TXB congestion. Spreading Factor 4

Data Source

NodeB_RNC_RXI

Source Field

pmNoOfRlAdditionFailuresSf4

Source Section

DownlinkBaseBandPool

pmNoOfRlAdditionFailuresSf64

The number of RL addition fail due to TXB congestion. Spreading Factor 64

Data Source

NodeB_RNC_RXI

Source Field

pmNoOfRlAdditionFailuresSf64

Source Section

DownlinkBaseBandPool

pmNoOfRlAdditionFailuresSf8

The number of RL addition fail due to TXB congestion. Spreading Factor 8

Data Source

NodeB_RNC_RXI

Source Field

pmNoOfRlAdditionFailuresSf8

Source Section

DownlinkBaseBandPool

pmNoOfRlAddittionFailuresSf4

The number of RL Addition failures for the DL baseband pool caused by TXB congestion, stored in the applicable counter depending on the SF.

Data Source

NodeB

pmSamplesCapacityDlCe

Number of samples in pmSumCapacityDlCe (that is, pmSamplesCapacityDlCe = pmSamplesCapacityDlCe + 1, whenever pmSumCapacityDlCe is to be updated).

Data Source

NodeB_RNC_RXI

Source Field

pmSamplesCapacityDlCe

Source Section

DownlinkBaseBandPool

pmSetupAttemptsSf128

The number of setup attempts on the DL base band pool. Spreading Factor 128

Data Source

NodeB_RNC_RXI

Source Field

pmSetupAttemptsSf128

Source Section

DownlinkBaseBandPool

pmSetupAttemptsSf16

The number of setup attempts on the DL base band pool. Spreading Factor 128

Data Source

NodeB_RNC_RXI

Source Field

pmSetupAttemptsSf16

Source Section

DownlinkBaseBandPool

pmSetupAttemptsSf256

The number of setup attempts on the DL base band pool. Spreading Factor 256

Data Source

NodeB_RNC_RXI

Source Field

pmSetupAttemptsSf256

Source Section

DownlinkBaseBandPool

pmSetupAttemptsSf32

The number of setup attempts on the DL base band pool. Spreading Factor 32

Data Source

NodeB_RNC_RXI

Source Field

pmSetupAttemptsSf32

Source Section

DownlinkBaseBandPool

pmSetupAttemptsSf4

The number of setup attempts on the DL base band pool. Spreading Factor 4

Data Source

NodeB_RNC_RXI

Source Field

pmSetupAttemptsSf4

Source Section

DownlinkBaseBandPool

pmSetupAttemptsSf64

The number of setup attempts on the DL base band pool. Spreading Factor 64

Data Source

NodeB_RNC_RXI

Source Field

pmSetupAttemptsSf64

Source Section

DownlinkBaseBandPool

pmSetupAttemptsSf8

The number of setup attempts on the DL base band pool. Spreading Factor 8

Data Source

NodeB_RNC_RXI

Source Field

pmSetupAttemptsSf8

Source Section

DownlinkBaseBandPool

pmSetupFailuresSf128

The number of setup fail due to TXB cong on DL base band pool. Spreading Factor 128

Data Source

NodeB_RNC_RXI

Source Field

pmSetupFailuresSf128

Source Section

DownlinkBaseBandPool

pmSetupFailuresSf16

The number of setup fail due to TXB cong on DL base band pool. Spreading Factor 16

Data Source

NodeB_RNC_RXI

Source Field

pmSetupFailuresSf16

Source Section

DownlinkBaseBandPool

pmSetupFailuresSf256

The number of setup fail due to TXB cong on DL base band pool. Spreading Factor 256

Data Source

NodeB_RNC_RXI

Source Field

pmSetupFailuresSf256

Source Section

DownlinkBaseBandPool

pmSetupFailuresSf32

The number of setup fail due to TXB cong on DL base band pool. Spreading Factor 32

Data Source

NodeB_RNC_RXI

Source Field

pmSetupFailuresSf32

Source Section

DownlinkBaseBandPool

pmSetupFailuresSf4

The number of setup fail due to TXB cong on DL base band pool. Spreading Factor 4

Data Source

NodeB_RNC_RXI

Source Field

pmSetupFailuresSf4

Source Section

DownlinkBaseBandPool

pmSetupFailuresSf64

The number of setup fail due to TXB cong on DL base band pool. Spreading Factor 64

Data Source

NodeB_RNC_RXI

Source Field

pmSetupFailuresSf64

Source Section

DownlinkBaseBandPool

pmSetupFailuresSf8

The number of setup fail due to TXB cong on DL base band pool. Spreading Factor 8

Data Source

NodeB_RNC_RXI

Source Field

pmSetupFailuresSf8

Source Section

DownlinkBaseBandPool

pmSumCapacityDlCe

Aggregate of all sample values (measurement_value) recorded within the ROP for number of used DL Channel Elements.

Data Source

NodeB_RNC_RXI

Source Field

pmSumCapacityDlCe

Source Section

DownlinkBaseBandPool

pmSumSqrCapacityDlCe

Aggregate of the squares of the sample values (measurement_value) in pmSumCapacityDlCe, that is, pmSumSqrCapacityDlCe = pmSumSqrCapacityDlCe + sqr(measurement_value).

Data Source

NodeB_RNC_RXI

Source Field

pmSumSqrCapacityDlCe

Source Section

DownlinkBaseBandPool

pmUsedADch_00

The distribution of A-DCH resource utilization, as percentages of the configured A-DCH resources. Range: Configured limit.

Data Source

NodeB_RNC_RXI

Source Field

pmUsedADch

Source Section

DownlinkBaseBandPool

pmUsedADch_01

The distribution of A-DCH resource utilization, as percentages of the configured A-DCH resources. Range: Number of sampled value in range 0..20%

Data Source

NodeB_RNC_RXI

Source Field

pmUsedADch

Source Section

DownlinkBaseBandPool

pmUsedADch_02

The distribution of A-DCH resource utilization, as percentages of the configured A-DCH resources. Range: Number of sampled value in range 20..40%

Data Source

NodeB_RNC_RXI

Source Field

pmUsedADch

Source Section

DownlinkBaseBandPool

pmUsedADch_03

The distribution of A-DCH resource utilization, as percentages of the configured A-DCH resources. Range: Number of sampled value in range 40..50%

Data Source

NodeB_RNC_RXI

Source Field

pmUsedADch

Source Section

DownlinkBaseBandPool

pmUsedADch_04

The distribution of A-DCH resource utilization, as percentages of the configured A-DCH resources. Range: Number of sampled value in range 50..60%

Data Source

NodeB_RNC_RXI

Source Field

pmUsedADch

Source Section

DownlinkBaseBandPool

pmUsedADch_05

The distribution of A-DCH resource utilization, as percentages of the configured A-DCH resources. Range: Number of sampled value in range 60..70%

Data Source

NodeB_RNC_RXI

Source Field

pmUsedADch

Source Section

DownlinkBaseBandPool

pmUsedADch_06

The distribution of A-DCH resource utilization, as percentages of the configured A-DCH resources. Range: Number of sampled value in range 70..80%

Data Source

NodeB_RNC_RXI

Source Field

pmUsedADch

Source Section

DownlinkBaseBandPool

pmUsedADch_07

The distribution of A-DCH resource utilization, as percentages of the configured A-DCH resources. Range: Number of sampled value in range 80..85%

Data Source

NodeB_RNC_RXI

Source Field

pmUsedADch

Source Section

DownlinkBaseBandPool

pmUsedADch_08

The distribution of A-DCH resource utilization, as percentages of the configured A-DCH resources. Range: Number of sampled value in range 85..90%

Data Source

NodeB_RNC_RXI

Source Field

pmUsedADch

Source Section

DownlinkBaseBandPool

pmUsedADch_09

The distribution of A-DCH resource utilization, as percentages of the configured A-DCH resources. Range: Number of sampled value in range 90..95%

Data Source

NodeB_RNC_RXI

Source Field

pmUsedADch

Source Section

DownlinkBaseBandPool

pmUsedADch_10

The distribution of A-DCH resource utilization, as percentages of the configured A-DCH resources. Range: Number of sampled value in range >=95%

Data Source

NodeB_RNC_RXI

Source Field

pmUsedADch

Source Section

DownlinkBaseBandPool

DtmfRcvrService Primitive Calculations

The following is a list of primitive calculations for the DtmfRcvrService entity.

GRAPHmultiLineSeparator

Special Control Field for Multi-Line Graphs

Calculation

```
""
```

NUMDAYS

of days in Report

Calculation

```
DAYSINREPORT()
```

NUMHOURS

of hours in Summation Data

Calculation

DtmfRcvrService Peg Counts

The following is a list of peg counts for the DtmfRcvrService entity.

PERLENSEC

Period length in seconds

Data Source

RNC_RXI

Source Field

PERLENSEC

Source Section

DtmfRcvrService_Gen

pmForcedRelease

Total Number of forced device releases for ex due to spontaneous device fault

Data Source

RNC_RXI

Source Field

pmForcedRelease

Source Section

DtmfReceiverService

pmNormalRelease

Total Number of normal device releases

Data Source

RNC_RXI

Source Field

pmNormalRelease

Source Section

DtmfReceiverService

pmTotalSeizures

The total number of seizure attempt of devices from this device Service.

Data Source

RNC_RXI

Source Field

pmTotalSeizures

Source Section

DtmfReceiverService

pmUnsuccSeizures

The total number of failed seizure attempts due to congestion.

Data Source

RNC_RXI

Source Field

pmUnsuccSeizures

Source Section

DtmfReceiverService

RNC_RELEASE

Release

Data Source

RNC_RXI

Source Field

RNC_RELEASE

Source Section

DtmfReceiverService_Gen

DtmfSenderService Primitive Calculations

The following is a list of primitive calculations for the DtmfSenderService entity.

GRAPHmultiLineSeparator

Special Control Field for Multi-Line Graphs

Calculation

```
""
```

NUMDAYS

of days in Report

Calculation

```
DAYSINREPORT()
```

NUMHOURS

of hours in Summation Data

Calculation

p_Seizures_Sucess_Rate

Percentege of Seizures which are sucessful

Calculation

```
100.0 * vsum( pmTotalSeizures, -1 * pmUnsuccSeizures ) / pmTotalSeizures
```

DtmfSenderService Peg Counts

The following is a list of peg counts for the DtmfSenderService entity.

PERLENSEC

Period length in seconds

Data Source

RNC_RXI

Source Field

PERLENSEC

Source Section

DtmfSenderService_Gen

pmForcedRelease

Total Number of forced device releases for ex due to spontaneous device fault

Data Source

RNC_RXI

Source Field

pmForcedRelease

Source Section

DtmfSenderService

pmNormalRelease

Total Number of normal device releases

Data Source

RNC_RXI

Source Field

pmNormalRelease

Source Section

DtmfSenderService

pmTotalSeizures

The total number of seizure attempt of devices from this device Service.

Data Source

RNC_RXI

Source Field

pmTotalSeizures

Source Section

DtmfSenderService

pmUnsuccSeizures

The total number of failed seizure attempts due to congestion.

Data Source

RNC_RXI

Source Field

pmUnsuccSeizures

Source Section

DtmfSenderService

RNC_RELEASE

Release

Data Source

RNC_RXI

Source Field

RNC_RELEASE

Source Section

DtmfSenderService_Gen

E1PhysPathTerm_NodeB Primitive Calculations

The following is a list of primitive calculations for the E1PhysPathTerm_NodeB entity.

GRAPHmultiLineSeparator

Special Control Field for Multi-Line Graphs

Calculation

```
""
```

NUMDAYS

of days in Report

Calculation

```
DAYSINREPORT()
```

NUMHOURS

of hours in Summation Data

Calculation

Phy_Errored_Ratio_NodeB

In standards (G.826) Errored Seconds Ratio

Calculation

```
pmEs / PERLENSEC
```

Phy_Severely_Errored_Ratio_NodeB

In standards (G.826) Severly Errored Seconds Ratio

Calculation

```
pmSes / PERLENSEC
```

E1PhysPathTerm_NodeB Peg Counts

The following is a list of peg counts for the E1PhysPathTerm_NodeB entity.

NodeB_RELEASE

Release

Data Source

NodeB_RNC_RXI

Source Section

E1PhysPathTerm_NodeB

PERLENSEC

Period Length

Data Source

NodeB_RNC_RXI

Source Field

perlensec

Source Section

E1PhysPathTerm_NodeB_WMGeneral

PERLENSEC_K

Period length in seconds aggregation summation in time domain and aggregation maximum between Network Elements.

Data Source

NodeB_RNC_RXI

Source Field

perlensec

Source Section

E1PhysPathTerm_NodeB_WMGeneral

pmEs

Errored seconds (ES).

Data Source

NodeB_RNC_RXI

Source Field

pmEs

Source Section

E1PhysPathTerm_NodeB

pmSes

Severely errored seconds (SES).

Data Source

NodeB_RNC_RXI

Source Field

pmSes

Source Section

E1PhysPathTerm_NodeB

pmUas

Transmission Unavailable Seconds (UAS). The accumulated unavailable time in seconds during the interval. Unavailable time starts when 10 consecutive SES are detected (them being part of the unavailable time) and ends when 10 consecutive non-SES are detected

Data Source

NodeB_RXI

Source Field

pmUas

Source Section

E1PhysPathTerm

E1PhysPathTerm_RNC Primitive Calculations

The following is a list of primitive calculations for the E1PhysPathTerm_RNC entity.

GRAPHmultiLineSeparator

Special Control Field for Multi-Line Graphs

Calculation

```
""
```

NUMDAYS

of days in Report

Calculation

```
DAYSINREPORT()
```

NUMHOURS

of hours in Summation Data

Calculation

Phy_Errored_Ratio_RNC

In standards (G.826) Errored Seconds Ratio

Calculation

```
pmEs / PERLENSEC
```

Updated: 2009-07-22

Phy_Severely_Errored_Ratio_RNC

In standards (G.826) Severly Errored Seconds Ratio

Calculation

```
pmSes / PERLENSEC
```

E1PhysPathTerm_RNC Peg Counts

The following is a list of peg counts for the E1PhysPathTerm_RNC entity.

PERLENSEC

Period Length

Data Source

NodeB_RNC_RXI

Source Field

perlensec

Source Section

E1PhysPathTerm_RNC_WMGeneral

PERLENSEC_K

Period length in seconds aggregation summation in time domain and aggregation maximum between Network Elements.

Data Source

NodeB_RNC_RXI

Source Field

perlensec

Source Section

E1PhysPathTerm_RNC_WMGeneral

pmEs

Errored seconds (ES).

Data Source

NodeB_RNC_RXI

Source Field

pmEs

Source Section

E1PhysPathTerm_RNC

pmSes

Severely errored seconds (SES).

Data Source

NodeB_RNC_RXI

Source Field

pmSes

Source Section

E1PhysPathTerm_RNC

pmUas

Transmission Unavailable Seconds (UAS). The accumulated unavailable time in seconds during the interval. Unavailable time starts when 10 consecutive SES are detected (them being part of the unavailable time) and ends when 10 consecutive non-SES are detected

Data Source

RNC_RXI

Source Field

pmUas

Source Section

E1PhysPathTerm

RNC_RELEASE

Release

Data Source

NodeB_RNC_RXI

Source Section

E1PhysPathTerm_RNC

E1Ttp_NodeB Primitive Calculations

The following is a list of primitive calculations for the E1Ttp_NodeB entity.

GRAPHmultiLineSeparator

Special Control Field for Multi-Line Graphs

Calculation

```
""
```

NUMDAYS

of days in Report

Calculation

```
DAYSINREPORT()
```

NUMHOURS

of hours in Summation Data

Calculation

Phy_Errored_Ratio_NodeB

In standards (G.826) Errored Seconds Ratio

Calculation

```
pmEs / PERLENSEC
```

Phy_Severely_Errored_Ratio_NodeB

In standards (G.826) Severly Errored Seconds Ratio

Calculation

```
pmSes / PERLENSEC
```

E1Ttp_NodeB Peg Counts

The following is a list of peg counts for the E1Ttp_NodeB entity.

NodeB_RELEASE

Release

Data Source

NodeB_RXI

Source Section

E1Ttp_NodeB

PERLENSEC

Period Length

Data Source

NodeB_RXI

Source Field

PERLENSEC

Source Section

E1Ttp_NodeB_WMGeneral

PERLENSEC_K

Period length in seconds aggregation summation in time domain and aggregation maximum between Network Elements.

Data Source

NodeB_RXI

Source Field

PERLENSEC

Source Section

E1Ttp_NodeB_WMGeneral

pmEs

Errored seconds (ES).

Data Source

NodeB_RXI

Source Field

pmEs

Source Section

E1Ttp

pmSes

Severely errored seconds (SES).

Data Source

NodeB_RXI

Source Field

pmSes

Source Section

E1Ttp

pmUas

Transmission Unavailable Seconds (UAS). The accumulated unavailable time in seconds during the interval. Unavailable time starts when 10 consecutive SES are detected (them being part of the unavailable time) and ends when 10 consecutive non-SES are detected

Data Source

NodeB_RXI

Source Field

pmUas

Source Section

E1Ttp

E1Ttp_RNC Primitive Calculations

The following is a list of primitive calculations for the E1Ttp_RNC entity.

GRAPHmultiLineSeparator

Special Control Field for Multi-Line Graphs

Calculation

```
""
```

NUMDAYS

of days in Report

Calculation

```
DAYSINREPORT()
```

NUMHOURS

of hours in Summation Data

Calculation

Phy_Errored_Ratio_RNC

In standards (G.826) Errored Seconds Ratio

Calculation

```
pmEs / PERLENSEC
```

Phy_Severely_Errored_Ratio_RNC

In standards (G.826) Severly Errored Seconds Ratio

Calculation

```
pmSes / PERLENSEC
```

E1Ttp_RNC Peg Counts

The following is a list of peg counts for the E1Ttp_RNC entity.

PERLENSEC

Period Length

Data Source

RNC_RXI

Source Field

PERLENSEC

Source Section

E1Ttp_RNC_WMGeneral

PERLENSEC_K

Period length in seconds aggregation summation in time domain and aggregation maximum between Network Elements.

Data Source

RNC_RXI

Source Field

PERLENSEC

Source Section

E1Ttp_RNC_WMGeneral

pmEs

Errored seconds (ES).

Data Source

RNC_RXI

Source Field

pmEs

Source Section

E1Ttp

pmSes

Severely errored seconds (SES).

Data Source

RNC_RXI

Source Field

pmSes

Source Section

E1Ttp

pmUas

Transmission Unavailable Seconds (UAS). The accumulated unavailable time in seconds during the interval. Unavailable time starts when 10 consecutive SES are detected (them being part of the unavailable time) and ends when 10 consecutive non-SES are detected

Data Source

RNC_RXI

Source Field

pmUas

Source Section

E1Ttp

RNC_RELEASE

Release

Data Source

RNC_RXI

Source Section

E1Ttp_RNC

ECRouteParameterSet Primitive Calculations

The following is a list of primitive calculations for the ECRouteParameterSet entity.

GRAPHmultiLineSeparator

Special Control Field for Multi-Line Graphs

Calculation

```
""
```

NUMDAYS

of days in Report

Calculation

```
DAYSINREPORT()
```

NUMHOURS

of hours in Summation Data

Calculation

ECRouteParameterSet Peg Counts

The following is a list of peg counts for the ECRouteParameterSet entity.

PERLENSEC

Period length in seconds

Data Source

RNC_RXI

Source Field

PERLENSEC

Source Section

ECRouteParameterSet_Gen

pmI10ValAslr

The total number of ASL-R measurements at -22 and -23 dbm0

Data Source

RNC_RXI

Source Field

pmI10ValAslr

Source Section

ECRouteParameterSet

pmI10ValAsls

The total number of ASL-S measurements at -22 and -23 dbm0

Data Source

RNC_RXI

Source Field

pmI10ValAsls

Source Section

ECRouteParameterSet

pmI10ValErl

The total number of ERL measurements at 18 and 19 db

Data Source

RNC_RXI

Source Field

pmI10ValErl

Source Section

ECRouteParameterSet

pmI10ValPd

The total number of PD measurements between 72 and 79 ms

Data Source

RNC_RXI

Source Field

pmI10ValPd

Source Section

ECRouteParameterSet

pmI11ValAslr

The total number of ASL-R measurements at -24 and -25 dbm0

Data Source

RNC_RXI

Source Field

pmI11ValAslr

Source Section

ECRouteParameterSet

pmI11ValAsls

The total number of ASL-S measurements at -24 and -25 dbm0

Data Source

RNC_RXI

Source Field

pmI11ValAsls

Source Section

ECRouteParameterSet

pmI11ValErl

The total number of ERL measurements at 20 and 21 db

Data Source

RNC_RXI

Source Field

pmI11ValErl

Source Section

ECRouteParameterSet

pmI11ValPd

The total number of PD measurements between 80 and 87 ms.

Data Source

RNC_RXI

Source Field

pmI11ValPd

Source Section

ECRouteParameterSet

pmI12ValAslr

The total number of ASL-R measurements at -26 and -27 dbm0.

Data Source

RNC_RXI

Source Field

pmI12ValAslr

Source Section

ECRouteParameterSet

pmI12ValAsls

The total number of ASL-S measurements at -26 and -27 dbm0.

Data Source

RNC_RXI

Source Field

pmI12ValAsls

Source Section

ECRouteParameterSet

pmI12ValErl

The total number of ERL measurements at 22 and 23 db.

Data Source

RNC_RXI

Source Field

pmI12ValErl

Source Section

ECRouteParameterSet

pmI12ValPd

The total number of PD measurements between 88 and 95 ms.

Data Source

RNC_RXI

Source Field

pmI12ValPd

Source Section

ECRouteParameterSet

pmI13ValAslr

The total number of ASL-R measurements at -28 and -29 dbm0.

Data Source

RNC_RXI

Source Field

pmI13ValAslr

Source Section

ECRouteParameterSet

pmI13ValAsls

The total number of ASL-S measurements at -28 and -29 dbm0.

Data Source

RNC_RXI

Source Field

pmI13ValAsls

Source Section

ECRouteParameterSet

pmI13ValErl

The total number of ERL measurements at 24 and 25 db.

Data Source

RNC_RXI

Source Field

pmI13ValErl

Source Section

ECRouteParameterSet

pmI13ValPd

The total number of PD measurements between 96 and 103 ms.

Data Source

RNC_RXI

Source Field

pmI13ValPd

Source Section

ECRouteParameterSet

pmI14ValAslr

The total number of ASL-R measurements at -30 and -31 dbm0.

Data Source

RNC_RXI

Source Field

pmI14ValAslr

Source Section

ECRouteParameterSet

pmI14ValAsls

The total number of ASL-S measurements at -30 and -31 dbm0.

Data Source

RNC_RXI

Source Field

pmI14ValAsls

Source Section

ECRouteParameterSet

pmI14ValErl

The total number of ERL measurements at 26 and 27 db.

Data Source

RNC_RXI

Source Field

pmI14ValErl

Source Section

ECRouteParameterSet

pmI14ValPd

The total number of PD measurements between 104 and 111 ms.

Data Source

RNC_RXI

Source Field

pmI14ValPd

Source Section

ECRouteParameterSet

pmI15ValAslr

The total number of ASL-R measurements at -32 and -33 dbm0.

Data Source

RNC_RXI

Source Field

pmI15ValAslr

Source Section

ECRouteParameterSet

pmI15ValAsls

The total number of ASL-S measurements at -32 and -33 dbm0.

Data Source

RNC_RXI

Source Field

pmI15ValAsls

Source Section

ECRouteParameterSet

pmI15ValErl

The total number of ERL measurements at 28 and 29 db.

Data Source

RNC_RXI

Source Field

pmI15ValErl

Source Section

ECRouteParameterSet

pmI15ValPd

The total number of PD measurements between 112 and 119 ms.

Data Source

RNC_RXI

Source Field

pmI15ValPd

Source Section

ECRouteParameterSet

pmI16ValAslr

The total number of ASL-R measurements at -34 and -35 dbm0.

Data Source

RNC_RXI

Source Field

pmI16ValAslr

Source Section

ECRouteParameterSet

pmI16ValAsls

The total number of ASL-S measurements at -34 and -35 dbm0.

Data Source

RNC_RXI

Source Field

pmI16ValAsls

Source Section

ECRouteParameterSet

pmI16ValErl

The total number of ERL measurements at 30 db.

Data Source

RNC_RXI

Source Field

pmI16ValErl

Source Section

ECRouteParameterSet

pmI16ValPd

The total number of PD measurements between 120 and 127 ms.

Data Source

RNC_RXI

Source Field

pmI16ValPd

Source Section

ECRouteParameterSet

pmI1ValAslr

The total number of Active Speech Level at Rout (ASL-R) measurements at -4 and -5 dbm0.

Data Source

RNC_RXI

Source Field

pmI1ValAslr

Source Section

ECRouteParameterSet

pmI1ValAsls

The total number of Active Speech Level at Sout (ASL-S) measurements at -4 and -5 dbm0.

Data Source

RNC_RXI

Source Field

pmI1ValAsls

Source Section

ECRouteParameterSet

pmI1ValErl

The total number of Echo Return Loss (ERL) measurements at 0 and 1 db.

Data Source

RNC_RXI

Source Field

pmI1ValErl

Source Section

ECRouteParameterSet

pmI1ValPd

The total number of Pure Delay (PD) measurements between 0 and 7 ms.

Data Source

RNC_RXI

Source Field

pmI1ValPd

Source Section

ECRouteParameterSet

pmI2ValAslr

The total number of ASL-R measurements at -6 and -7 dbm0.

Data Source

RNC_RXI

Source Field

pmI2ValAslr

Source Section

ECRouteParameterSet

pmI2ValAsls

The total number of ASL-S measurements at -6 and -7 dbm0.

Data Source

RNC_RXI

Source Field

pmI2ValAsls

Source Section

ECRouteParameterSet

pmI2ValErl

The total number of ERL measurements at 2 and 3 db.

Data Source

RNC_RXI

Source Field

pmI2ValErl

Source Section

ECRouteParameterSet

pmI2ValPd

The total number of PD measurements between 8 and 15 ms.

Data Source

RNC_RXI

Source Field

pmI2ValPd

Source Section

ECRouteParameterSet

pmI3ValAslr

The total number of ASL-R measurements at -8 and -9 dbm0.

Data Source

RNC_RXI

Source Field

pmI3ValAslr

Source Section

ECRouteParameterSet

pmI3ValAsls

The total number of ASL-S measurements at -8 and -9 dbm0.

Data Source

RNC_RXI

Source Field

pmI3ValAsls

Source Section

ECRouteParameterSet

pmI3ValErl

The total number of ERL measurements at 4 and 5 db.

Data Source

RNC_RXI

Source Field

pmI3ValErl

Source Section

ECRouteParameterSet

pmI3ValPd

The total number of PD measurements between 16 and 23 ms.

Data Source

RNC_RXI

Source Field

pmI3ValPd

Source Section

ECRouteParameterSet

pmI4ValAslr

The total number of ASL-R measurements at -10 and -11 dbm0.

Data Source

RNC_RXI

Source Field

pmI4ValAslr

Source Section

ECRouteParameterSet

pmI4ValAsls

The total number of ASL-S measurements at -10 and -11 dbm0.

Data Source

RNC_RXI

Source Field

pmI4ValAsls

Source Section

ECRouteParameterSet

pmI4ValErl

The total number of ERL measurements at 6 and 7 db.

Data Source

RNC_RXI

Source Field

pmI4ValErl

Source Section

ECRouteParameterSet

pmI4ValPd

The total number of PD measurements between 24 and 31 ms.

Data Source

RNC_RXI

Source Field

pmI4ValPd

Source Section

ECRouteParameterSet

pmI5ValAslr

The total number of ASL-R measurements at -12 and -13 dbm0.

Data Source

RNC_RXI

Source Field

pmI5ValAslr

Source Section

ECRouteParameterSet

pmI5ValAsls

The total number of ASL-S measurements at -12 and -13 dbm0.

Data Source

RNC_RXI

Source Field

pmI5ValAsls

Source Section

ECRouteParameterSet

pmI5ValErl

The total number of ERL measurements at 8 and 9 db.

Data Source

RNC_RXI

Source Field

pmI5ValErl

Source Section

ECRouteParameterSet

pmI5ValPd

The total number of PD measurements between 32 and 39 ms.

Data Source

RNC_RXI

Source Field

pmI5ValPd

Source Section

ECRouteParameterSet

pmI6ValAslr

The total number of ASL-R measurements at -14 and -15 dbm0.

Data Source

RNC_RXI

Source Field

pmI6ValAslr

Source Section

ECRouteParameterSet

pmI6ValAsls

The total number of ASL-S measurements at -14 and -15 dbm0.

Data Source

RNC_RXI

Source Field

pmI6ValAsls

Source Section

ECRouteParameterSet

pmI6ValErl

The total number of ERL measurements at 10 and 11 db.

Data Source

RNC_RXI

Source Field

pmI6ValErl

Source Section

ECRouteParameterSet

pmI6ValPd

The total number of PD measurements between 40 and 47 ms.

Data Source

RNC_RXI

Source Field

pmI6ValPd

Source Section

ECRouteParameterSet

pmI7ValAslr

The total number of ERL measurements at 12 and 13 db.

Data Source

RNC_RXI

Source Field

pmI7ValAslr

Source Section

ECRouteParameterSet

pmI7ValAsls

The total number of ERL measurements at 12 and 13 db.

Data Source

RNC_RXI

Source Field

pmI7ValAsls

Source Section

ECRouteParameterSet

pmI7ValErl

The total number of ERL measurements at 12 and 13 db.

Data Source

RNC_RXI

Source Field

pmI7ValErl

Source Section

ECRouteParameterSet

pmI7ValPd

The total number of PD measurements between 48 and 55 ms.

Data Source

RNC_RXI

Source Field

pmI7ValPd

Source Section

ECRouteParameterSet

pmI8ValAslr

The total number of ASL-R measurements at -18 and -19 dbm0.

Data Source

RNC_RXI

Source Field

pmI8ValAslr

Source Section

ECRouteParameterSet

pmI8ValAsls

The total number of ASL-S measurements at -18 and -19 dbm0.

Data Source

RNC_RXI

Source Field

pmI8ValAsls

Source Section

ECRouteParameterSet

pmI8ValErl

The total number of ERL measurements at 14 and 15 db.

Data Source

RNC_RXI

Source Field

pmI8ValErl

Source Section

ECRouteParameterSet

pmI8ValPd

The total number of PD measurements between 56 and 63 ms.

Data Source

RNC_RXI

Source Field

pmI8ValPd

Source Section

ECRouteParameterSet

pmI9ValAslr

The total number of ASL-R measurements at -20 and -21 dbm0.

Data Source

RNC_RXI

Source Field

pmI9ValAslr

Source Section

ECRouteParameterSet

pmI9ValAsls

The total number of ASL-S measurements at -20 and -21 dbm0.

Data Source

RNC_RXI

Source Field

pmI9ValAsls

Source Section

ECRouteParameterSet

pmI9ValErl

The total number of ERL measurements at 16 and 17 db.

Data Source

RNC_RXI

Source Field

pmI9ValErl

Source Section

ECRouteParameterSet

pmI9ValPd

The total number of PD measurements between 64 and 71 ms.

Data Source

RNC_RXI

Source Field

pmI9ValPd

Source Section

ECRouteParameterSet

pmNInvalid

The total number of invalid measurements.

Data Source

RNC_RXI

Source Field

pmNInvalid

Source Section

ECRouteParameterSet

RNC_RELEASE

Release

Data Source

RNC_RXI

Source Field

RNC_RELEASE

Source Section

ECRouteParameterSet_Gen

ECServiceRNC Primitive Calculations

The following is a list of primitive calculations for the ECServiceRNC entity.

GRAPHmultiLineSeparator

Special Control Field for Multi-Line Graphs

Calculation

```
""
```

NUMDAYS

of days in Report

Calculation

```
DAYSINREPORT()
```

NUMHOURS

of hours in Summation Data

Calculation

p_Seizures_Sucess_Rate

Percentege of Seizures which are sucessful

Calculation

```
100.0 * vsum( pmTotalSeizures, -1 * pmUnsuccSeizures ) / pmTotalSeizures
```

ECServiceRNC Peg Counts

The following is a list of peg counts for the ECServiceRNC entity.

PERLENSEC

Period length in seconds

Data Source

RNC_RXI

Source Field

PERLENSEC

Source Section

ECServiceRNC_Gen

pmForcedRelease

Total Number of forced device releases for ex due to spontaneous device fault

Data Source

RNC_RXI

Source Field

pmForcedRelease

Source Section

ECService

pmNormalRelease

Total Number of normal device releases

Data Source

RNC_RXI

Source Field

pmNormalRelease

Source Section

ECService

pmTotalSeizures

The total number of seizure attempt of devices from this device Service.

Data Source

RNC_RXI

Source Field

pmTotalSeizures

Source Section

EcService

pmUnsuccSeizures

The total number of failed seizure attempts due to congestion.

Data Source

RNC_RXI

Source Field

pmUnsuccSeizures

Source Section

EcService

RNC_RELEASE

Release

Data Source

RNC_RXI

Source Field

RNC_RELEASE

Source Section

ECService_Gen

EDchResources Primitive Calculations

The following is a list of primitive calculations for the EDchResources entity.

GRAPHmultiLineSeparator

Special Control Field for Multi-Line Graphs

Calculation

""

NUMDAYS

of days in Report

Calculation

```
DAYSINREPORT()
```

NUMHOURS

of hours in Summation Data

EDchResources Peg Counts

The following is a list of peg counts for the EDchResources entity.

PERLENSEC

Period length in seconds

Data Source

NodeB

Source Field

gp

Source Section

EDchResources

PERLENSEC_K

Period length in seconds aggregation summation in time domain and aggregation maximum between Network Elements.

Data Source

NodeB

Source Field

gp

Source Section

EDchResources

pmCapacityAllocAttServEDchUsers

The number of attempts to allocate resources for new Serving E-DCH user.

Data Source

NodeB

Source Field

pmCapacityAllocAttServEDchUsers

Source Section

EDchResources

pmCapacityServEDchUsers_00

The distribution of the number of Serving E-DCH users, as percentages of the corresponding license limit. Range: License limit

Data Source

NodeB

Source Field

pmCapacityServEDchUsers

Source Section

EDchResources

pmCapacityServEDchUsers_01

The distribution of the number of Serving E-DCH users, as percentages of the corresponding license limit. Number of sampled value in range 0..20%

Data Source

NodeB

Source Field

pmCapacityServEDchUsers

Source Section

EDchResources

pmCapacityServEDchUsers_02

The distribution of the number of Serving E-DCH users, as percentages of the corresponding license limit. Number of sampled value in range 20..40%

Data Source

NodeB

Source Field

pmCapacityServEDchUsers

Source Section

EDchResources

pmCapacityServEDchUsers_03

The distribution of the number of Serving E-DCH users, as percentages of the corresponding license limit. Number of sampled value in range 40..50%

Data Source

NodeB

Source Field

pmCapacityServEDchUsers

Source Section

EDchResources

pmCapacityServEDchUsers_04

The distribution of the number of Serving E-DCH users, as percentages of the corresponding license limit. Number of sampled value in range 50..60%

Data Source

NodeB

Source Field

pmCapacityServEDchUsers

Source Section

EDchResources

pmCapacityServEDchUsers_05

The distribution of the number of Serving E-DCH users, as percentages of the corresponding license limit. Number of sampled value in range 60..70%

Data Source

NodeB

Source Field

pmCapacityServEDchUsers

Source Section

EDchResources

pmCapacityServEDchUsers_06

The distribution of the number of Serving E-DCH users, as percentages of the corresponding license limit. Number of sampled value in range 70..80%

Data Source

NodeB

Source Field

pmCapacityServEDchUsers

Source Section

EDchResources

pmCapacityServEDchUsers_07

The distribution of the number of Serving E-DCH users, as percentages of the corresponding license limit. Number of sampled value in range 80..85%

Data Source

NodeB

Source Field

pmCapacityServEDchUsers

Source Section

EDchResources

pmCapacityServEDchUsers_08

The distribution of the number of Serving E-DCH users, as percentages of the corresponding license limit. Number of sampled value in range 85..90%

Data Source

NodeB

Source Field

pmCapacityServEDchUsers

Source Section

EDchResources

pmCapacityServEDchUsers_09

The distribution of the number of Serving E-DCH users, as percentages of the corresponding license limit. Number of sampled value in range 90..95%

Data Source

NodeB

Source Field

pmCapacityServEDchUsers

Source Section

EDchResources

pmCapacityServEDchUsers_10

The distribution of the number of Serving E-DCH users, as percentages of the corresponding license limit. Number of sampled value in range >=95%

Data Source

NodeB

Source Field

pmCapacityServEDchUsers

Source Section

EDchResources

pmCapAllocRejServEDchUsers

The number of attempts to allocate resources for new Serving E-DCH user that are rejected (related to bin [0] of pmCapacityServEDchUsers).

Data Source

NodeB

Source Field

pmCapacityAllocRejServEDchUsers

Source Section

EDchResources

pmCommonChPowerEul_00

This counter is used to observe the total DL power used for the E-AGCH, E-RGCH and E-HICH in the cell. Trigger: Sampled every 100 ms. Number of samples in range 0 to 1 dBm

Data Source

NodeB

Source Field

pmCommonChPowerEul

Source Section

EDchResources

pmCommonChPowerEul_01

This counter is used to observe the total DL power used for the E-AGCH, E-RGCH and E-HICH in the cell. Trigger: Sampled every 100 ms. Number of samples in range 1 to 2 dBm

Data Source

NodeB

Source Field

pmCommonChPowerEul

Source Section

EDchResources

pmCommonChPowerEul_02

This counter is used to observe the total DL power used for the E-AGCH, E-RGCH and E-HICH in the cell. Trigger: Sampled every 100 ms. Number of samples in range 2 to 3 dBm

Data Source

NodeB

Source Field

pmCommonChPowerEul

Source Section

EDchResources

pmCommonChPowerEul_03

This counter is used to observe the total DL power used for the E-AGCH, E-RGCH and E-HICH in the cell. Trigger: Sampled every 100 ms. Number of samples in range 3 to 4 dBm

Data Source

NodeB

Source Field

pmCommonChPowerEul

Source Section

EDchResources

pmCommonChPowerEul_04

This counter is used to observe the total DL power used for the E-AGCH, E-RGCH and E-HICH in the cell. Trigger: Sampled every 100 ms. Number of samples in range 4 to 5 dBm

Data Source

NodeB

Source Field

pmCommonChPowerEul

Source Section

EDchResources

pmCommonChPowerEul_05

This counter is used to observe the total DL power used for the E-AGCH, E-RGCH and E-HICH in the cell. Trigger: Sampled every 100 ms. Number of samples in range 5 to 6 dBm

Data Source

NodeB

Source Field

pmCommonChPowerEul

Source Section

EDchResources

pmCommonChPowerEul_06

This counter is used to observe the total DL power used for the E-AGCH, E-RGCH and E-HICH in the cell. Trigger: Sampled every 100 ms. Number of samples in range 6 to 7 dBm

Data Source

NodeB

Source Field

pmCommonChPowerEul

Source Section

EDchResources

pmCommonChPowerEul_07

This counter is used to observe the total DL power used for the E-AGCH, E-RGCH and E-HICH in the cell. Trigger: Sampled every 100 ms. Number of samples in range 7 to 8 dBm

Data Source

NodeB

Source Field

pmCommonChPowerEul

Source Section

EDchResources

pmCommonChPowerEul_08

This counter is used to observe the total DL power used for the E-AGCH, E-RGCH and E-HICH in the cell. Trigger: Sampled every 100 ms. Number of samples in range 8 to 9 dBm

Data Source

NodeB

Source Field

pmCommonChPowerEul

Source Section

EDchResources

pmCommonChPowerEul_09

This counter is used to observe the total DL power used for the E-AGCH, E-RGCH and E-HICH in the cell. Trigger: Sampled every 100 ms. Number of samples in range 9 to 10 dBm

Data Source

NodeB

Source Field

pmCommonChPowerEul

Source Section

EDchResources

pmCommonChPowerEul_10

This counter is used to observe the total DL power used for the E-AGCH, E-RGCH and E-HICH in the cell. Trigger: Sampled every 100 ms. Number of samples in range 10 to 11 dBm

Data Source

NodeB

Source Field

pmCommonChPowerEul

Source Section

EDchResources

pmCommonChPowerEul_11

This counter is used to observe the total DL power used for the E-AGCH, E-RGCH and E-HICH in the cell. Trigger: Sampled every 100 ms. Number of samples in range 11 to 12 dBm

Data Source

NodeB

Source Field

pmCommonChPowerEul

Source Section

EDchResources

pmCommonChPowerEul_12

This counter is used to observe the total DL power used for the E-AGCH, E-RGCH and E-HICH in the cell. Trigger: Sampled every 100 ms. Number of samples in range 12 to 13 dBm

Data Source

NodeB

Source Field

pmCommonChPowerEul

Source Section

EDchResources

pmCommonChPowerEul_13

This counter is used to observe the total DL power used for the E-AGCH, E-RGCH and E-HICH in the cell. Trigger: Sampled every 100 ms. Number of samples in range 13 to 14 dBm

Data Source

NodeB

Source Field

pmCommonChPowerEul

Source Section

EDchResources

pmCommonChPowerEul_14

This counter is used to observe the total DL power used for the E-AGCH, E-RGCH and E-HICH in the cell. Trigger: Sampled every 100 ms. Number of samples in range 14 to 15 dBm

Data Source

NodeB

Source Field

pmCommonChPowerEul

Source Section

EDchResources

pmCommonChPowerEul_15

This counter is used to observe the total DL power used for the E-AGCH, E-RGCH and E-HICH in the cell. Trigger: Sampled every 100 ms. Number of samples in range 15 to 16 dBm

Data Source

NodeB

Source Field

pmCommonChPowerEul

Source Section

EDchResources

pmCommonChPowerEul_16

This counter is used to observe the total DL power used for the E-AGCH, E-RGCH and E-HICH in the cell. Trigger: Sampled every 100 ms. Number of samples in range 16 to 17 dBm

Data Source

NodeB

Source Field

pmCommonChPowerEul

Source Section

EDchResources

pmCommonChPowerEul_17

This counter is used to observe the total DL power used for the E-AGCH, E-RGCH and E-HICH in the cell. Trigger: Sampled every 100 ms. Number of samples in range 17 to 18 dBm

Data Source

NodeB

Source Field

pmCommonChPowerEul

Source Section

EDchResources

pmCommonChPowerEul_18

This counter is used to observe the total DL power used for the E-AGCH, E-RGCH and E-HICH in the cell. Trigger: Sampled every 100 ms. Number of samples in range 18 to 19 dBm

Data Source

NodeB

Source Field

pmCommonChPowerEul

Source Section

EDchResources

pmCommonChPowerEul_19

This counter is used to observe the total DL power used for the E-AGCH, E-RGCH and E-HICH in the cell. Trigger: Sampled every 100 ms. Number of samples in range 19 to 20 dBm

Data Source

NodeB

Source Field

pmCommonChPowerEul

Source Section

EDchResources

pmCommonChPowerEul_20

This counter is used to observe the total DL power used for the E-AGCH, E-RGCH and E-HICH in the cell. Trigger: Sampled every 100 ms. Number of samples in range 20 to 21 dBm

Data Source

NodeB

Source Field

pmCommonChPowerEul

Source Section

EDchResources

pmCommonChPowerEul_21

This counter is used to observe the total DL power used for the E-AGCH, E-RGCH and E-HICH in the cell. Trigger: Sampled every 100 ms. Number of samples in range 21 to 22 dBm

Data Source

NodeB

Source Field

pmCommonChPowerEul

Source Section

EDchResources

pmCommonChPowerEul_22

This counter is used to observe the total DL power used for the E-AGCH, E-RGCH and E-HICH in the cell. Trigger: Sampled every 100 ms. Number of samples in range 22 to 23 dBm

Data Source

NodeB

Source Field

pmCommonChPowerEul

Source Section

EDchResources

pmCommonChPowerEul_23

This counter is used to observe the total DL power used for the E-AGCH, E-RGCH and E-HICH in the cell. Trigger: Sampled every 100 ms. Number of samples in range 23 to 24 dBm

Data Source

NodeB

Source Field

pmCommonChPowerEul

Source Section

EDchResources

pmCommonChPowerEul_24

This counter is used to observe the total DL power used for the E-AGCH, E-RGCH and E-HICH in the cell. Trigger: Sampled every 100 ms. Number of samples in range 24 to 25 dBm

Data Source

NodeB

Source Field

pmCommonChPowerEul

Source Section

EDchResources

pmCommonChPowerEul_25

This counter is used to observe the total DL power used for the E-AGCH, E-RGCH and E-HICH in the cell. Trigger: Sampled every 100 ms. Number of samples in range 25 to 26 dBm

Data Source

NodeB

Source Field

pmCommonChPowerEul

Source Section

EDchResources

pmCommonChPowerEul_26

This counter is used to observe the total DL power used for the E-AGCH, E-RGCH and E-HICH in the cell. Trigger: Sampled every 100 ms. Number of samples in range 26 to 27 dBm

Data Source

NodeB

Source Field

pmCommonChPowerEul

Source Section

EDchResources

pmCommonChPowerEul_27

This counter is used to observe the total DL power used for the E-AGCH, E-RGCH and E-HICH in the cell. Trigger: Sampled every 100 ms. Number of samples in range 27 to 28 dBm

Data Source

NodeB

Source Field

pmCommonChPowerEul

Source Section

EDchResources

pmCommonChPowerEul_28

This counter is used to observe the total DL power used for the E-AGCH, E-RGCH and E-HICH in the cell. Trigger: Sampled every 100 ms. Number of samples in range 28 to 29 dBm

Data Source

NodeB

Source Field

pmCommonChPowerEul

Source Section

EDchResources

pmCommonChPowerEul_29

This counter is used to observe the total DL power used for the E-AGCH, E-RGCH and E-HICH in the cell. Trigger: Sampled every 100 ms. Number of samples in range 29 to 30 dBm

Data Source

NodeB

Source Field

pmCommonChPowerEul

Source Section

EDchResources

pmCommonChPowerEul_30

This counter is used to observe the total DL power used for the E-AGCH, E-RGCH and E-HICH in the cell. Trigger: Sampled every 100 ms. Number of samples in range 30 to 31 dBm

Data Source

NodeB

Source Field

pmCommonChPowerEul

Source Section

EDchResources

pmCommonChPowerEul_31

This counter is used to observe the total DL power used for the E-AGCH, E-RGCH and E-HICH in the cell. Trigger: Sampled every 100 ms. Number of samples in range 31 to 32 dBm

Data Source

NodeB

Source Field

pmCommonChPowerEul

Source Section

EDchResources

pmCommonChPowerEul_32

This counter is used to observe the total DL power used for the E-AGCH, E-RGCH and E-HICH in the cell. Trigger: Sampled every 100 ms. Number of samples in range 32 to 33 dBm

Data Source

NodeB

Source Field

pmCommonChPowerEul

Source Section

EDchResources

pmCommonChPowerEul_33

This counter is used to observe the total DL power used for the E-AGCH, E-RGCH and E-HICH in the cell. Trigger: Sampled every 100 ms. Number of samples in range 33 to 34 dBm

Data Source

NodeB

Source Field

pmCommonChPowerEul

Source Section

EDchResources

pmCommonChPowerEul_34

This counter is used to observe the total DL power used for the E-AGCH, E-RGCH and E-HICH in the cell. Trigger: Sampled every 100 ms. Number of samples in range 34 to 35 dBm

Data Source

NodeB

Source Field

pmCommonChPowerEul

Source Section

EDchResources

pmCommonChPowerEul_35

This counter is used to observe the total DL power used for the E-AGCH, E-RGCH and E-HICH in the cell. Trigger: Sampled every 100 ms. Number of samples in range 35 to 36 dBm

Data Source

NodeB

Source Field

pmCommonChPowerEul

Source Section

EDchResources

pmCommonChPowerEul_36

This counter is used to observe the total DL power used for the E-AGCH, E-RGCH and E-HICH in the cell. Trigger: Sampled every 100 ms. Number of samples in range 36 to 37 dBm

Data Source

NodeB

Source Field

pmCommonChPowerEul

Source Section

EDchResources

pmCommonChPowerEul_37

This counter is used to observe the total DL power used for the E-AGCH, E-RGCH and E-HICH in the cell. Trigger: Sampled every 100 ms. Number of samples in range 37 to 38 dBm

Data Source

NodeB

Source Field

pmCommonChPowerEul

Source Section

EDchResources

pmCommonChPowerEul_38

This counter is used to observe the total DL power used for the E-AGCH, E-RGCH and E-HICH in the cell. Trigger: Sampled every 100 ms. Number of samples in range 38 to 39 dBm

Data Source

NodeB

Source Field

pmCommonChPowerEul

Source Section

EDchResources

pmCommonChPowerEul_39

This counter is used to observe the total DL power used for the E-AGCH, E-RGCH and E-HICH in the cell. Trigger: Sampled every 100 ms. Number of samples in range 39 to 40 dBm

Data Source

NodeB

Source Field

pmCommonChPowerEul

Source Section

EDchResources

pmCommonChPowerEul_40

This counter is used to observe the total DL power used for the E-AGCH, E-RGCH and E-HICH in the cell. Trigger: Sampled every 100 ms. Number of samples in range >= 40 dBm

Data Source

NodeB

Source Field

pmCommonChPowerEul

Source Section

EDchResources

pmLEDchTot_00

Counter for the Scheduled E-DCH Uu load estimate in a cell. Includes component from E-DPDCH, E-DPCCH for E-DCH users in the cell. The sampled value is a load factor and is unitless with range 0..1. Where 0 means no load and 1 is infinite load. Note it does not include

the load components of DPCCH and HS-DPCCH for E-DCH users. Range: number of samples in range 0..0.02

Data Source

NodeB

Source Field

pmLEDchTot

Source Section

EDchResources

pmLEDchTot_01

Counter for the Scheduled E-DCH Uu load estimate in a cell. Includes component from E-DPDCH, E-DPCCH for E-DCH users in the cell. The sampled value is a load factor and is unitless with range 0..1. Where 0 means no load and 1 is infinite load. Note it does not include the load components of DPCCH and HS-DPCCH for E-DCH users. Range: number of samples in range 0.02..0.04

Data Source

NodeB

Source Field

pmLEDchTot

Source Section

EDchResources

pmLEDchTot_02

Counter for the Scheduled E-DCH Uu load estimate in a cell. Includes component from E-DPDCH, E-DPCCH for E-DCH users in the cell. The sampled value is a load factor and is unitless with range 0..1. Where 0 means no load and 1 is infinite load. Note it does not include the load components of DPCCH and HS-DPCCH for E-DCH users. Range: number of samples in range 0.04..0.06

Data Source

NodeB

Source Field

pmLEDchTot

Source Section

EDchResources

pmLEDchTot_03

Counter for the Scheduled E-DCH Uu load estimate in a cell. Includes component from E-DPDCH, E-DPCCH for E-DCH users in the cell. The sampled value is a load factor and is unitless with range 0..1. Where 0 means no load and 1 is infinite load. Note it does not include the load components of DPCCH and HS-DPCCH for E-DCH users. Range: number of samples in range 0.06..0.08

Data Source

NodeB

Source Field

pmLEDchTot

Source Section

EDchResources

pmLEDchTot_04

Counter for the Scheduled E-DCH Uu load estimate in a cell. Includes component from E-DPDCH, E-DPCCH for E-DCH users in the cell. The sampled value is a load factor and is unitless with range 0..1. Where 0 means no load and 1 is infinite load. Note it does not include the load components of DPCCH and HS-DPCCH for E-DCH users. Range: number of samples in range 0.08..0.1

Data Source

NodeB

Source Field

pmLEDchTot

Source Section

EDchResources

pmLEDchTot_05

Counter for the Scheduled E-DCH Uu load estimate in a cell. Includes component from E-DPDCH, E-DPCCH for E-DCH users in the cell. The sampled value is a load factor and is unitless with range 0..1. Where 0 means no load and 1 is infinite load. Note it does not include

the load components of DPCCH and HS-DPCCH for E-DCH users. Range: number of samples in range 0.1..0.12

Data Source

NodeB

Source Field

pmLEDchTot

Source Section

EDchResources

pmLEDchTot_06

Counter for the Scheduled E-DCH Uu load estimate in a cell. Includes component from E-DPDCH, E-DPCCH for E-DCH users in the cell. The sampled value is a load factor and is unitless with range 0..1. Where 0 means no load and 1 is infinite load. Note it does not include the load components of DPCCH and HS-DPCCH for E-DCH users. Range: number of samples in range 0.12..0.14

Data Source

NodeB

Source Field

pmLEDchTot

Source Section

EDchResources

pmLEDchTot_07

Counter for the Scheduled E-DCH Uu load estimate in a cell. Includes component from E-DPDCH, E-DPCCH for E-DCH users in the cell. The sampled value is a load factor and is unitless with range 0..1. Where 0 means no load and 1 is infinite load. Note it does not include the load components of DPCCH and HS-DPCCH for E-DCH users. Range: number of samples in range 0.14..0.16

Data Source

NodeB

Source Field

pmLEDchTot

Source Section

EDchResources

pmLEDchTot_08

Counter for the Scheduled E-DCH Uu load estimate in a cell. Includes component from E-DPDCH, E-DPCCH for E-DCH users in the cell. The sampled value is a load factor and is unitless with range 0..1. Where 0 means no load and 1 is infinite load. Note it does not include the load components of DPCCH and HS-DPCCH for E-DCH users. Range: number of samples in range 0.16..0.18

Data Source

NodeB

Source Field

pmLEDchTot

Source Section

EDchResources

pmLEDchTot_09

Counter for the Scheduled E-DCH Uu load estimate in a cell. Includes component from E-DPDCH, E-DPCCH for E-DCH users in the cell. The sampled value is a load factor and is unitless with range 0..1. Where 0 means no load and 1 is infinite load. Note it does not include the load components of DPCCH and HS-DPCCH for E-DCH users. Range: number of samples in range 0.18..0.2

Data Source

NodeB

Source Field

pmLEDchTot

Source Section

EDchResources

pmLEDchTot_10

Counter for the Scheduled E-DCH Uu load estimate in a cell. Includes component from E-DPDCH, E-DPCCH for E-DCH users in the cell. The sampled value is a load factor and is unitless with range 0..1. Where 0 means no load and 1 is infinite load. Note it does not include

the load components of DPCCH and HS-DPCCH for E-DCH users. Range: number of samples in range 0.2..0.22

Data Source

NodeB

Source Field

pmLEDchTot

Source Section

EDchResources

pmLEDchTot_11

Counter for the Scheduled E-DCH Uu load estimate in a cell. Includes component from E-DPDCH, E-DPCCH for E-DCH users in the cell. The sampled value is a load factor and is unitless with range 0..1. Where 0 means no load and 1 is infinite load. Note it does not include the load components of DPCCH and HS-DPCCH for E-DCH users. Range: number of samples in range 0.22..0.24

Data Source

NodeB

Source Field

pmLEDchTot

Source Section

EDchResources

pmLEDchTot_12

Counter for the Scheduled E-DCH Uu load estimate in a cell. Includes component from E-DPDCH, E-DPCCH for E-DCH users in the cell. The sampled value is a load factor and is unitless with range 0..1. Where 0 means no load and 1 is infinite load. Note it does not include the load components of DPCCH and HS-DPCCH for E-DCH users. Range: number of samples in range 0.24..0.26

Data Source

NodeB

Source Field

pmLEDchTot

Source Section

EDchResources

pmLEDchTot_13

Counter for the Scheduled E-DCH Uu load estimate in a cell. Includes component from E-DPDCH, E-DPCCH for E-DCH users in the cell. The sampled value is a load factor and is unitless with range 0..1. Where 0 means no load and 1 is infinite load. Note it does not include the load components of DPCCH and HS-DPCCH for E-DCH users. Range: number of samples in range 0.26..0.28

Data Source

NodeB

Source Field

pmLEDchTot

Source Section

EDchResources

pmLEDchTot_14

Counter for the Scheduled E-DCH Uu load estimate in a cell. Includes component from E-DPDCH, E-DPCCH for E-DCH users in the cell. The sampled value is a load factor and is unitless with range 0..1. Where 0 means no load and 1 is infinite load. Note it does not include the load components of DPCCH and HS-DPCCH for E-DCH users. Range: number of samples in range 0.28..0.3

Data Source

NodeB

Source Field

pmLEDchTot

Source Section

EDchResources

pmLEDchTot_15

Counter for the Scheduled E-DCH Uu load estimate in a cell. Includes component from E-DPDCH, E-DPCCH for E-DCH users in the cell. The sampled value is a load factor and is unitless with range 0..1. Where 0 means no load and 1 is infinite load. Note it does not include

the load components of DPCCH and HS-DPCCH for E-DCH users. Range: number of samples in range 0.3..0.32

Data Source

NodeB

Source Field

pmLEDchTot

Source Section

EDchResources

pmLEDchTot_16

Counter for the Scheduled E-DCH Uu load estimate in a cell. Includes component from E-DPDCH, E-DPCCH for E-DCH users in the cell. The sampled value is a load factor and is unitless with range 0..1. Where 0 means no load and 1 is infinite load. Note it does not include the load components of DPCCH and HS-DPCCH for E-DCH users. Range: number of samples in range 0.32..0.34

Data Source

NodeB

Source Field

pmLEDchTot

Source Section

EDchResources

pmLEDchTot_17

Counter for the Scheduled E-DCH Uu load estimate in a cell. Includes component from E-DPDCH, E-DPCCH for E-DCH users in the cell. The sampled value is a load factor and is unitless with range 0..1. Where 0 means no load and 1 is infinite load. Note it does not include the load components of DPCCH and HS-DPCCH for E-DCH users. Range: number of samples in range 0.34..0.36

Data Source

NodeB

Source Field

pmLEDchTot

Source Section

EDchResources

pmLEDchTot_18

Counter for the Scheduled E-DCH Uu load estimate in a cell. Includes component from E-DPDCH, E-DPCCH for E-DCH users in the cell. The sampled value is a load factor and is unitless with range 0..1. Where 0 means no load and 1 is infinite load. Note it does not include the load components of DPCCH and HS-DPCCH for E-DCH users. Range: number of samples in range 0.36..0.38

Data Source

NodeB

Source Field

pmLEDchTot

Source Section

EDchResources

pmLEDchTot_19

Counter for the Scheduled E-DCH Uu load estimate in a cell. Includes component from E-DPDCH, E-DPCCH for E-DCH users in the cell. The sampled value is a load factor and is unitless with range 0..1. Where 0 means no load and 1 is infinite load. Note it does not include the load components of DPCCH and HS-DPCCH for E-DCH users. Range: number of samples in range 0.38..0.4

Data Source

NodeB

Source Field

pmLEDchTot

Source Section

EDchResources

pmLEDchTot_20

Counter for the Scheduled E-DCH Uu load estimate in a cell. Includes component from E-DPDCH, E-DPCCH for E-DCH users in the cell. The sampled value is a load factor and is unitless with range 0..1. Where 0 means no load and 1 is infinite load. Note it does not include

the load components of DPCCH and HS-DPCCH for E-DCH users. Range: number of samples in range 0.4..0.42

Data Source

NodeB

Source Field

pmLEDchTot

Source Section

EDchResources

pmLEDchTot_21

Counter for the Scheduled E-DCH Uu load estimate in a cell. Includes component from E-DPDCH, E-DPCCH for E-DCH users in the cell. The sampled value is a load factor and is unitless with range 0..1. Where 0 means no load and 1 is infinite load. Note it does not include the load components of DPCCH and HS-DPCCH for E-DCH users. Range: number of samples in range 0.42..0.44

Data Source

NodeB

Source Field

pmLEDchTot

Source Section

EDchResources

pmLEDchTot_22

Counter for the Scheduled E-DCH Uu load estimate in a cell. Includes component from E-DPDCH, E-DPCCH for E-DCH users in the cell. The sampled value is a load factor and is unitless with range 0..1. Where 0 means no load and 1 is infinite load. Note it does not include the load components of DPCCH and HS-DPCCH for E-DCH users. Range: number of samples in range 0.44..0.46

Data Source

NodeB

Source Field

pmLEDchTot

Source Section

EDchResources

pmLEDchTot_23

Counter for the Scheduled E-DCH Uu load estimate in a cell. Includes component from E-DPDCH, E-DPCCH for E-DCH users in the cell. The sampled value is a load factor and is unitless with range 0..1. Where 0 means no load and 1 is infinite load. Note it does not include the load components of DPCCH and HS-DPCCH for E-DCH users. Range: number of samples in range 0.46..0.48

Data Source

NodeB

Source Field

pmLEDchTot

Source Section

EDchResources

pmLEDchTot_24

Counter for the Scheduled E-DCH Uu load estimate in a cell. Includes component from E-DPDCH, E-DPCCH for E-DCH users in the cell. The sampled value is a load factor and is unitless with range 0..1. Where 0 means no load and 1 is infinite load. Note it does not include the load components of DPCCH and HS-DPCCH for E-DCH users. Range: number of samples in range 0.48..0.5

Data Source

NodeB

Source Field

pmLEDchTot

Source Section

EDchResources

pmLEDchTot_25

Counter for the Scheduled E-DCH Uu load estimate in a cell. Includes component from E-DPDCH, E-DPCCH for E-DCH users in the cell. The sampled value is a load factor and is unitless with range 0..1. Where 0 means no load and 1 is infinite load. Note it does not include

the load components of DPCCH and HS-DPCCH for E-DCH users. Range: number of samples in range 0.5..0.52

Data Source

NodeB

Source Field

pmLEDchTot

Source Section

EDchResources

pmLEDchTot_26

Counter for the Scheduled E-DCH Uu load estimate in a cell. Includes component from E-DPDCH, E-DPCCH for E-DCH users in the cell. The sampled value is a load factor and is unitless with range 0..1. Where 0 means no load and 1 is infinite load. Note it does not include the load components of DPCCH and HS-DPCCH for E-DCH users. Range: number of samples in range 0.52..0.54

Data Source

NodeB

Source Field

pmLEDchTot

Source Section

EDchResources

pmLEDchTot_27

Counter for the Scheduled E-DCH Uu load estimate in a cell. Includes component from E-DPDCH, E-DPCCH for E-DCH users in the cell. The sampled value is a load factor and is unitless with range 0..1. Where 0 means no load and 1 is infinite load. Note it does not include the load components of DPCCH and HS-DPCCH for E-DCH users. Range: number of samples in range 0.54..0.56

Data Source

NodeB

Source Field

pmLEDchTot

Source Section

EDchResources

pmLEDchTot_28

Counter for the Scheduled E-DCH Uu load estimate in a cell. Includes component from E-DPDCH, E-DPCCH for E-DCH users in the cell. The sampled value is a load factor and is unitless with range 0..1. Where 0 means no load and 1 is infinite load. Note it does not include the load components of DPCCH and HS-DPCCH for E-DCH users. Range: number of samples in range 0.56..0.58

Data Source

NodeB

Source Field

pmLEDchTot

Source Section

EDchResources

pmLEDchTot_29

Counter for the Scheduled E-DCH Uu load estimate in a cell. Includes component from E-DPDCH, E-DPCCH for E-DCH users in the cell. The sampled value is a load factor and is unitless with range 0..1. Where 0 means no load and 1 is infinite load. Note it does not include the load components of DPCCH and HS-DPCCH for E-DCH users. Range: number of samples in range 0.58..0.6

Data Source

NodeB

Source Field

pmLEDchTot

Source Section

EDchResources

pmLEDchTot_30

Counter for the Scheduled E-DCH Uu load estimate in a cell. Includes component from E-DPDCH, E-DPCCH for E-DCH users in the cell. The sampled value is a load factor and is unitless with range 0..1. Where 0 means no load and 1 is infinite load. Note it does not include

the load components of DPCCH and HS-DPCCH for E-DCH users. Range: number of samples in range 0.6..0.62

Data Source

NodeB

Source Field

pmLEDchTot

Source Section

EDchResources

pmLEDchTot_31

Counter for the Scheduled E-DCH Uu load estimate in a cell. Includes component from E-DPDCH, E-DPCCH for E-DCH users in the cell. The sampled value is a load factor and is unitless with range 0..1. Where 0 means no load and 1 is infinite load. Note it does not include the load components of DPCCH and HS-DPCCH for E-DCH users. Range: number of samples in range 0.62..0.64

Data Source

NodeB

Source Field

pmLEDchTot

Source Section

EDchResources

pmLEDchTot_32

Counter for the Scheduled E-DCH Uu load estimate in a cell. Includes component from E-DPDCH, E-DPCCH for E-DCH users in the cell. The sampled value is a load factor and is unitless with range 0..1. Where 0 means no load and 1 is infinite load. Note it does not include the load components of DPCCH and HS-DPCCH for E-DCH users. Range: number of samples in range 0.64..0.66

Data Source

NodeB

Source Field

pmLEDchTot

Source Section

EDchResources

pmLEDchTot_33

Counter for the Scheduled E-DCH Uu load estimate in a cell. Includes component from E-DPDCH, E-DPCCH for E-DCH users in the cell. The sampled value is a load factor and is unitless with range 0..1. Where 0 means no load and 1 is infinite load. Note it does not include the load components of DPCCH and HS-DPCCH for E-DCH users. Range: number of samples in range 0.66..0.68

Data Source

NodeB

Source Field

pmLEDchTot

Source Section

EDchResources

pmLEDchTot_34

Counter for the Scheduled E-DCH Uu load estimate in a cell. Includes component from E-DPDCH, E-DPCCH for E-DCH users in the cell. The sampled value is a load factor and is unitless with range 0..1. Where 0 means no load and 1 is infinite load. Note it does not include the load components of DPCCH and HS-DPCCH for E-DCH users. Range: number of samples in range 0.68..0.7

Data Source

NodeB

Source Field

pmLEDchTot

Source Section

EDchResources

pmLEDchTot_35

Counter for the Scheduled E-DCH Uu load estimate in a cell. Includes component from E-DPDCH, E-DPCCH for E-DCH users in the cell. The sampled value is a load factor and is unitless with range 0..1. Where 0 means no load and 1 is infinite load. Note it does not include

the load components of DPCCH and HS-DPCCH for E-DCH users. Range: number of samples in range 0.7..0.72

Data Source

NodeB

Source Field

pmLEDchTot

Source Section

EDchResources

pmLEDchTot_36

Counter for the Scheduled E-DCH Uu load estimate in a cell. Includes component from E-DPDCH, E-DPCCH for E-DCH users in the cell. The sampled value is a load factor and is unitless with range 0..1. Where 0 means no load and 1 is infinite load. Note it does not include the load components of DPCCH and HS-DPCCH for E-DCH users. Range: number of samples in range 0.72..0.74

Data Source

NodeB

Source Field

pmLEDchTot

Source Section

EDchResources

pmLEDchTot_37

Counter for the Scheduled E-DCH Uu load estimate in a cell. Includes component from E-DPDCH, E-DPCCH for E-DCH users in the cell. The sampled value is a load factor and is unitless with range 0..1. Where 0 means no load and 1 is infinite load. Note it does not include the load components of DPCCH and HS-DPCCH for E-DCH users. Range: number of samples in range 0.74..0.76

Data Source

NodeB

Source Field

pmLEDchTot

Source Section

EDchResources

pmLEDchTot_38

Counter for the Scheduled E-DCH Uu load estimate in a cell. Includes component from E-DPDCH, E-DPCCH for E-DCH users in the cell. The sampled value is a load factor and is unitless with range 0..1. Where 0 means no load and 1 is infinite load. Note it does not include the load components of DPCCH and HS-DPCCH for E-DCH users. Range: number of samples in range 0.76..0.78

Data Source

NodeB

Source Field

pmLEDchTot

Source Section

EDchResources

pmLEDchTot_39

Counter for the Scheduled E-DCH Uu load estimate in a cell. Includes component from E-DPDCH, E-DPCCH for E-DCH users in the cell. The sampled value is a load factor and is unitless with range 0..1. Where 0 means no load and 1 is infinite load. Note it does not include the load components of DPCCH and HS-DPCCH for E-DCH users. Range: number of samples in range 0.78..0.8

Data Source

NodeB

Source Field

pmLEDchTot

Source Section

EDchResources

pmLEDchTot_40

Counter for the Scheduled E-DCH Uu load estimate in a cell. Includes component from E-DPDCH, E-DPCCH for E-DCH users in the cell. The sampled value is a load factor and is unitless with range 0..1. Where 0 means no load and 1 is infinite load. Note it does not include

the load components of DPCCH and HS-DPCCH for E-DCH users. Range: number of samples in range 0.8..0.82

Data Source

NodeB

Source Field

pmLEDchTot

Source Section

EDchResources

pmLEDchTot_41

Counter for the Scheduled E-DCH Uu load estimate in a cell. Includes component from E-DPDCH, E-DPCCH for E-DCH users in the cell. The sampled value is a load factor and is unitless with range 0..1. Where 0 means no load and 1 is infinite load. Note it does not include the load components of DPCCH and HS-DPCCH for E-DCH users. Range: number of samples in range 0.82..0.84

Data Source

NodeB

Source Field

pmLEDchTot

Source Section

EDchResources

pmLEDchTot_42

Counter for the Scheduled E-DCH Uu load estimate in a cell. Includes component from E-DPDCH, E-DPCCH for E-DCH users in the cell. The sampled value is a load factor and is unitless with range 0..1. Where 0 means no load and 1 is infinite load. Note it does not include the load components of DPCCH and HS-DPCCH for E-DCH users. Range: number of samples in range 0.84..0.86

Data Source

NodeB

Source Field

pmLEDchTot

Source Section

EDchResources

pmLEDchTot_43

Counter for the Scheduled E-DCH Uu load estimate in a cell. Includes component from E-DPDCH, E-DPCCH for E-DCH users in the cell. The sampled value is a load factor and is unitless with range 0..1. Where 0 means no load and 1 is infinite load. Note it does not include the load components of DPCCH and HS-DPCCH for E-DCH users. Range: number of samples in range 0.86..0.88

Data Source

NodeB

Source Field

pmLEDchTot

Source Section

EDchResources

pmLEDchTot_44

Counter for the Scheduled E-DCH Uu load estimate in a cell. Includes component from E-DPDCH, E-DPCCH for E-DCH users in the cell. The sampled value is a load factor and is unitless with range 0..1. Where 0 means no load and 1 is infinite load. Note it does not include the load components of DPCCH and HS-DPCCH for E-DCH users. Range: number of samples in range 0.88..0.9

Data Source

NodeB

Source Field

pmLEDchTot

Source Section

EDchResources

pmLEDchTot_45

Counter for the Scheduled E-DCH Uu load estimate in a cell. Includes component from E-DPDCH, E-DPCCH for E-DCH users in the cell. The sampled value is a load factor and is unitless with range 0..1. Where 0 means no load and 1 is infinite load. Note it does not include

the load components of DPCCH and HS-DPCCH for E-DCH users. Range: number of samples in range 0.9..0.92

Data Source

NodeB

Source Field

pmLEDchTot

Source Section

EDchResources

pmLEDchTot_46

Counter for the Scheduled E-DCH Uu load estimate in a cell. Includes component from E-DPDCH, E-DPCCH for E-DCH users in the cell. The sampled value is a load factor and is unitless with range 0..1. Where 0 means no load and 1 is infinite load. Note it does not include the load components of DPCCH and HS-DPCCH for E-DCH users. Range: number of samples in range 0.92..0.94

Data Source

NodeB

Source Field

pmLEDchTot

Source Section

EDchResources

pmLEDchTot_47

Counter for the Scheduled E-DCH Uu load estimate in a cell. Includes component from E-DPDCH, E-DPCCH for E-DCH users in the cell. The sampled value is a load factor and is unitless with range 0..1. Where 0 means no load and 1 is infinite load. Note it does not include the load components of DPCCH and HS-DPCCH for E-DCH users. Range: number of samples in range 0.94..0.96

Data Source

NodeB

Source Field

pmLEDchTot

Source Section

EDchResources

pmLEDchTot_48

Counter for the Scheduled E-DCH Uu load estimate in a cell. Includes component from E-DPDCH, E-DPCCH for E-DCH users in the cell. The sampled value is a load factor and is unitless with range 0..1. Where 0 means no load and 1 is infinite load. Note it does not include the load components of DPCCH and HS-DPCCH for E-DCH users. Range: number of samples in range 0.96..0.98

Data Source

NodeB

Source Field

pmLEDchTot

Source Section

EDchResources

pmLEDchTot_49

Counter for the Scheduled E-DCH Uu load estimate in a cell. Includes component from E-DPDCH, E-DPCCH for E-DCH users in the cell. The sampled value is a load factor and is unitless with range 0..1. Where 0 means no load and 1 is infinite load. Note it does not include the load components of DPCCH and HS-DPCCH for E-DCH users. Range: number of samples in range 0.98..1 Range: number of samples in range 0.98..1

Data Source

NodeB

Source Field

pmLEDchTot

Source Section

EDchResources

pmLMaxEDch_00

Counter for the total cell level estimate of the Uu component of the scheduling headroom available for EUL 'schedulable' traffic in a cell. The sampled value is a load factor and is unit less with range 0..1. Where 0 means no load and 1 is infinite load. Range: number of samples in range 0..0.02

Data Source

NodeB

Source Field

pmLMaxEDch

Source Section

EDchResources

pmLMaxEDch_01

Counter for the total cell level estimate of the Uu component of the scheduling headroom available for EUL 'schedulable' traffic in a cell. The sampled value is a load factor and is unit less with range 0..1. Where 0 means no load and 1 is infinite load. Range: number of samples in range 0.02..0.04

Data Source

NodeB

Source Field

pmLMaxEDch

Source Section

EDchResources

pmLMaxEDch_02

Counter for the total cell level estimate of the Uu component of the scheduling headroom available for EUL 'schedulable' traffic in a cell. The sampled value is a load factor and is unit less with range 0..1. Where 0 means no load and 1 is infinite load. Range: number of samples in range 0.04..0.06

Data Source

NodeB

Source Field

pmLMaxEDch

Source Section

EDchResources

pmLMaxEDch_03

Counter for the total cell level estimate of the Uu component of the scheduling headroom available for EUL 'schedulable' traffic in a cell. The sampled value is a load factor and is unit less with range 0..1. Where 0 means no load and 1 is infinite load. Range: number of samples in range 0.06..0.08

Data Source

NodeB

Source Field

pmLMaxEDch

Source Section

EDchResources

pmLMaxEDch_04

Counter for the total cell level estimate of the Uu component of the scheduling headroom available for EUL 'schedulable' traffic in a cell. The sampled value is a load factor and is unit less with range 0..1. Where 0 means no load and 1 is infinite load. Range: number of samples in range 0.08..0.1

Data Source

NodeB

Source Field

pmLMaxEDch

Source Section

EDchResources

pmLMaxEDch_05

Counter for the total cell level estimate of the Uu component of the scheduling headroom available for EUL 'schedulable' traffic in a cell. The sampled value is a load factor and is unit less with range 0..1. Where 0 means no load and 1 is infinite load. Range: number of samples in range 0.1..0.12

Data Source

NodeB

Source Field

pmLMaxEDch

Source Section

EDchResources

pmLMaxEDch_06

Counter for the total cell level estimate of the Uu component of the scheduling headroom available for EUL 'schedulable' traffic in a cell. The sampled value is a load factor and is unit less with range 0..1. Where 0 means no load and 1 is infinite load. Range: number of samples in range 0.12..0.14

Data Source

NodeB

Source Field

pmLMaxEDch

Source Section

EDchResources

pmLMaxEDch_07

Counter for the total cell level estimate of the Uu component of the scheduling headroom available for EUL 'schedulable' traffic in a cell. The sampled value is a load factor and is unit less with range 0..1. Where 0 means no load and 1 is infinite load. Range: number of samples in range 0.14..0.16

Data Source

NodeB

Source Field

pmLMaxEDch

Source Section

EDchResources

pmLMaxEDch_08

Counter for the total cell level estimate of the Uu component of the scheduling headroom available for EUL 'schedulable' traffic in a cell. The sampled value is a load factor and is unit

less with range 0..1. Where 0 means no load and 1 is infinite load. Range: number of samples in range 0.16..0.18

Data Source

NodeB

Source Field

pmLMaxEDch

Source Section

EDchResources

pmLMaxEDch_09

Counter for the total cell level estimate of the Uu component of the scheduling headroom available for EUL 'schedulable' traffic in a cell. The sampled value is a load factor and is unit less with range 0..1. Where 0 means no load and 1 is infinite load. Range: number of samples in range 0.18..0.2

Data Source

NodeB

Source Field

pmLMaxEDch

Source Section

EDchResources

pmLMaxEDch_10

Counter for the total cell level estimate of the Uu component of the scheduling headroom available for EUL 'schedulable' traffic in a cell. The sampled value is a load factor and is unit less with range 0..1. Where 0 means no load and 1 is infinite load. Range: number of samples in range 0.2..0.22

Data Source

NodeB

Source Field

pmLMaxEDch

Source Section

EDchResources

pmLMaxEDch_11

Counter for the total cell level estimate of the Uu component of the scheduling headroom available for EUL 'schedulable' traffic in a cell. The sampled value is a load factor and is unit less with range 0..1. Where 0 means no load and 1 is infinite load. Range: number of samples in range 0.22..0.24

Data Source

NodeB

Source Field

pmLMaxEDch

Source Section

EDchResources

pmLMaxEDch_12

Counter for the total cell level estimate of the Uu component of the scheduling headroom available for EUL 'schedulable' traffic in a cell. The sampled value is a load factor and is unit less with range 0..1. Where 0 means no load and 1 is infinite load. Range: number of samples in range 0.24..0.26

Data Source

NodeB

Source Field

pmLMaxEDch

Source Section

EDchResources

pmLMaxEDch_13

Counter for the total cell level estimate of the Uu component of the scheduling headroom available for EUL 'schedulable' traffic in a cell. The sampled value is a load factor and is unit less with range 0..1. Where 0 means no load and 1 is infinite load. Range: number of samples in range 0.26..0.28

Data Source

NodeB

Source Field

pmLMaxEDch

Source Section

EDchResources

pmLMaxEDch_14

Counter for the total cell level estimate of the Uu component of the scheduling headroom available for EUL 'schedulable' traffic in a cell. The sampled value is a load factor and is unit less with range 0..1. Where 0 means no load and 1 is infinite load. Range: number of samples in range 0.28..0.3

Data Source

NodeB

Source Field

pmLMaxEDch

Source Section

EDchResources

pmLMaxEDch_15

Counter for the total cell level estimate of the Uu component of the scheduling headroom available for EUL 'schedulable' traffic in a cell. The sampled value is a load factor and is unit less with range 0..1. Where 0 means no load and 1 is infinite load. Range: number of samples in range 0.3..0.32

Data Source

NodeB

Source Field

pmLMaxEDch

Source Section

EDchResources

pmLMaxEDch_16

Counter for the total cell level estimate of the Uu component of the scheduling headroom available for EUL 'schedulable' traffic in a cell. The sampled value is a load factor and is unit less with range 0..1. Where 0 means no load and 1 is infinite load. Range: number of samples in range 0.32..0.34

Data Source

NodeB

Source Field

pmLMaxEDch

Source Section

EDchResources

pmLMaxEDch_17

Counter for the total cell level estimate of the Uu component of the scheduling headroom available for EUL 'schedulable' traffic in a cell. The sampled value is a load factor and is unit less with range 0..1. Where 0 means no load and 1 is infinite load. Range: number of samples in range 0.34..0.36

Data Source

NodeB

Source Field

pmLMaxEDch

Source Section

EDchResources

pmLMaxEDch_18

Counter for the total cell level estimate of the Uu component of the scheduling headroom available for EUL 'schedulable' traffic in a cell. The sampled value is a load factor and is unit less with range 0..1. Where 0 means no load and 1 is infinite load. Range: number of samples in range 0.36..0.38

Data Source

NodeB

Source Field

pmLMaxEDch

Source Section

EDchResources

pmLMaxEDch_19

Counter for the total cell level estimate of the Uu component of the scheduling headroom available for EUL 'schedulable' traffic in a cell. The sampled value is a load factor and is unit less with range 0..1. Where 0 means no load and 1 is infinite load. Range: number of samples in range 0.38..0.4

Data Source

NodeB

Source Field

pmLMaxEDch

Source Section

EDchResources

pmLMaxEDch_20

Counter for the total cell level estimate of the Uu component of the scheduling headroom available for EUL 'schedulable' traffic in a cell. The sampled value is a load factor and is unit less with range 0..1. Where 0 means no load and 1 is infinite load. Range: number of samples in range 0.4..0.42

Data Source

NodeB

Source Field

pmLMaxEDch

Source Section

EDchResources

pmLMaxEDch_21

Counter for the total cell level estimate of the Uu component of the scheduling headroom available for EUL 'schedulable' traffic in a cell. The sampled value is a load factor and is unit

less with range 0..1. Where 0 means no load and 1 is infinite load. Range: number of samples in range 0.42..0.44

Data Source

NodeB

Source Field

pmLMaxEDch

Source Section

EDchResources

pmLMaxEDch_22

Counter for the total cell level estimate of the Uu component of the scheduling headroom available for EUL 'schedulable' traffic in a cell. The sampled value is a load factor and is unit less with range 0..1. Where 0 means no load and 1 is infinite load. Range: number of samples in range 0.44..0.46

Data Source

NodeB

Source Field

pmLMaxEDch

Source Section

EDchResources

pmLMaxEDch_23

Counter for the total cell level estimate of the Uu component of the scheduling headroom available for EUL 'schedulable' traffic in a cell. The sampled value is a load factor and is unit less with range 0..1. Where 0 means no load and 1 is infinite load. Range: number of samples in range 0.46..0.48

Data Source

NodeB

Source Field

pmLMaxEDch

Source Section

EDchResources

pmLMaxEDch_24

Counter for the total cell level estimate of the Uu component of the scheduling headroom available for EUL 'schedulable' traffic in a cell. The sampled value is a load factor and is unit less with range 0..1. Where 0 means no load and 1 is infinite load. Range: number of samples in range 0.48..0.5

Data Source

NodeB

Source Field

pmLMaxEDch

Source Section

EDchResources

pmLMaxEDch_25

Counter for the total cell level estimate of the Uu component of the scheduling headroom available for EUL 'schedulable' traffic in a cell. The sampled value is a load factor and is unit less with range 0..1. Where 0 means no load and 1 is infinite load. Range: number of samples in range 0.5..0.52

Data Source

NodeB

Source Field

pmLMaxEDch

Source Section

EDchResources

pmLMaxEDch_26

Counter for the total cell level estimate of the Uu component of the scheduling headroom available for EUL 'schedulable' traffic in a cell. The sampled value is a load factor and is unit less with range 0..1. Where 0 means no load and 1 is infinite load. Range: number of samples in range 0.52..0.54

Data Source

NodeB

Source Field

pmLMaxEDch

Source Section

EDchResources

pmLMaxEDch_27

Counter for the total cell level estimate of the Uu component of the scheduling headroom available for EUL 'schedulable' traffic in a cell. The sampled value is a load factor and is unit less with range 0..1. Where 0 means no load and 1 is infinite load. Range: number of samples in range 0.54..0.56

Data Source

NodeB

Source Field

pmLMaxEDch

Source Section

EDchResources

pmLMaxEDch_28

Counter for the total cell level estimate of the Uu component of the scheduling headroom available for EUL 'schedulable' traffic in a cell. The sampled value is a load factor and is unit less with range 0..1. Where 0 means no load and 1 is infinite load. Range: number of samples in range 0.56..0.58

Data Source

NodeB

Source Field

pmLMaxEDch

Source Section

EDchResources

pmLMaxEDch_29

Counter for the total cell level estimate of the Uu component of the scheduling headroom available for EUL 'schedulable' traffic in a cell. The sampled value is a load factor and is unit less with range 0..1. Where 0 means no load and 1 is infinite load. Range: number of samples in range 0.58..0.6

Data Source

NodeB

Source Field

pmLMaxEDch

Source Section

EDchResources

pmLMaxEDch_30

Counter for the total cell level estimate of the Uu component of the scheduling headroom available for EUL 'schedulable' traffic in a cell. The sampled value is a load factor and is unit less with range 0..1. Where 0 means no load and 1 is infinite load. Range: number of samples in range 0.6..0.62

Data Source

NodeB

Source Field

pmLMaxEDch

Source Section

EDchResources

pmLMaxEDch_31

Counter for the total cell level estimate of the Uu component of the scheduling headroom available for EUL 'schedulable' traffic in a cell. The sampled value is a load factor and is unit less with range 0..1. Where 0 means no load and 1 is infinite load. Range: number of samples in range 0.62..0.64

Data Source

NodeB

Source Field

pmLMaxEDch

Source Section

EDchResources

pmLMaxEDch_32

Counter for the total cell level estimate of the Uu component of the scheduling headroom available for EUL 'schedulable' traffic in a cell. The sampled value is a load factor and is unit less with range 0..1. Where 0 means no load and 1 is infinite load. Range: number of samples in range 0.64..0.66

Data Source

NodeB

Source Field

pmLMaxEDch

Source Section

EDchResources

pmLMaxEDch_33

Counter for the total cell level estimate of the Uu component of the scheduling headroom available for EUL 'schedulable' traffic in a cell. The sampled value is a load factor and is unit less with range 0..1. Where 0 means no load and 1 is infinite load. Range: number of samples in range 0.66..0.68

Data Source

NodeB

Source Field

pmLMaxEDch

Source Section

EDchResources

pmLMaxEDch_34

Counter for the total cell level estimate of the Uu component of the scheduling headroom available for EUL 'schedulable' traffic in a cell. The sampled value is a load factor and is unit

less with range 0..1. Where 0 means no load and 1 is infinite load. Range: number of samples in range 0.68..0.7

Data Source

NodeB

Source Field

pmLMaxEDch

Source Section

EDchResources

pmLMaxEDch_35

Counter for the total cell level estimate of the Uu component of the scheduling headroom available for EUL 'schedulable' traffic in a cell. The sampled value is a load factor and is unit less with range 0..1. Where 0 means no load and 1 is infinite load. Range: number of samples in range 0.7..0.72

Data Source

NodeB

Source Field

pmLMaxEDch

Source Section

EDchResources

pmLMaxEDch_36

Counter for the total cell level estimate of the Uu component of the scheduling headroom available for EUL 'schedulable' traffic in a cell. The sampled value is a load factor and is unit less with range 0..1. Where 0 means no load and 1 is infinite load. Range: number of samples in range 0.72..0.74

Data Source

NodeB

Source Field

pmLMaxEDch

Source Section

EDchResources

pmLMaxEDch_37

Counter for the total cell level estimate of the Uu component of the scheduling headroom available for EUL 'schedulable' traffic in a cell. The sampled value is a load factor and is unit less with range 0..1. Where 0 means no load and 1 is infinite load. Range: number of samples in range 0.74..0.76

Data Source

NodeB

Source Field

pmLMaxEDch

Source Section

EDchResources

pmLMaxEDch_38

Counter for the total cell level estimate of the Uu component of the scheduling headroom available for EUL 'schedulable' traffic in a cell. The sampled value is a load factor and is unit less with range 0..1. Where 0 means no load and 1 is infinite load. Range: number of samples in range 0.76..0.78

Data Source

NodeB

Source Field

pmLMaxEDch

Source Section

EDchResources

pmLMaxEDch_39

Counter for the total cell level estimate of the Uu component of the scheduling headroom available for EUL 'schedulable' traffic in a cell. The sampled value is a load factor and is unit less with range 0..1. Where 0 means no load and 1 is infinite load. Range: number of samples in range 0.78..0.8

Data Source

NodeB

Source Field

pmLMaxEDch

Source Section

EDchResources

pmLMaxEDch_40

Counter for the total cell level estimate of the Uu component of the scheduling headroom available for EUL 'schedulable' traffic in a cell. The sampled value is a load factor and is unit less with range 0..1. Where 0 means no load and 1 is infinite load. Range: number of samples in range 0.8..0.82

Data Source

NodeB

Source Field

pmLMaxEDch

Source Section

EDchResources

pmLMaxEDch_41

Counter for the total cell level estimate of the Uu component of the scheduling headroom available for EUL 'schedulable' traffic in a cell. The sampled value is a load factor and is unit less with range 0..1. Where 0 means no load and 1 is infinite load. Range: number of samples in range 0.82..0.84

Data Source

NodeB

Source Field

pmLMaxEDch

Source Section

EDchResources

pmLMaxEDch_42

Counter for the total cell level estimate of the Uu component of the scheduling headroom available for EUL 'schedulable' traffic in a cell. The sampled value is a load factor and is unit less with range 0..1. Where 0 means no load and 1 is infinite load. Range: number of samples in range 0.84..0.86

Data Source

NodeB

Source Field

pmLMaxEDch

Source Section

EDchResources

pmLMaxEDch_43

Counter for the total cell level estimate of the Uu component of the scheduling headroom available for EUL 'schedulable' traffic in a cell. The sampled value is a load factor and is unit less with range 0..1. Where 0 means no load and 1 is infinite load. Range: number of samples in range 0.86..0.88

Data Source

NodeB

Source Field

pmLMaxEDch

Source Section

EDchResources

pmLMaxEDch_44

Counter for the total cell level estimate of the Uu component of the scheduling headroom available for EUL 'schedulable' traffic in a cell. The sampled value is a load factor and is unit less with range 0..1. Where 0 means no load and 1 is infinite load. Range: number of samples in range 0.88..0.9

Data Source

NodeB

Source Field

pmLMaxEDch

Source Section

EDchResources

pmLMaxEDch_45

Counter for the total cell level estimate of the Uu component of the scheduling headroom available for EUL 'schedulable' traffic in a cell. The sampled value is a load factor and is unit less with range 0..1. Where 0 means no load and 1 is infinite load. Range: number of samples in range 0.9..0.92

Data Source

NodeB

Source Field

pmLMaxEDch

Source Section

EDchResources

pmLMaxEDch_46

Counter for the total cell level estimate of the Uu component of the scheduling headroom available for EUL 'schedulable' traffic in a cell. The sampled value is a load factor and is unit less with range 0..1. Where 0 means no load and 1 is infinite load. Range: number of samples in range 0.92..0.94

Data Source

NodeB

Source Field

pmLMaxEDch

Source Section

EDchResources

pmLMaxEDch_47

Counter for the total cell level estimate of the Uu component of the scheduling headroom available for EUL 'schedulable' traffic in a cell. The sampled value is a load factor and is unit

less with range 0..1. Where 0 means no load and 1 is infinite load. Range: number of samples in range 0.94..0.96

Data Source

NodeB

Source Field

pmLMaxEDch

Source Section

EDchResources

pmLMaxEDch_48

Counter for the total cell level estimate of the Uu component of the scheduling headroom available for EUL 'schedulable' traffic in a cell. The sampled value is a load factor and is unit less with range 0..1. Where 0 means no load and 1 is infinite load. Range: number of samples in range 0.96..0.98

Data Source

NodeB

Source Field

pmLMaxEDch

Source Section

EDchResources

pmLMaxEDch_49

Counter for the total cell level estimate of the Uu component of the scheduling headroom available for EUL 'schedulable' traffic in a cell. The sampled value is a load factor and is unit less with range 0..1. Where 0 means no load and 1 is infinite load. Range: number of samples in range 0.98..1

Data Source

NodeB

Source Field

pmLMaxEDch

Source Section

EDchResources

pmNoActive10msFramesEul

PEG counter for the sum of used 10 ms frames (TTI) that receive E-DCH data in a cell during an ROP period for all E-DCH users.

Data Source

NodeB

Source Field

pmNoActive10msFramesEul

Source Section

EDchResources

pmNoActive10msIntEulTti10

Counter for the total amount of 10 ms intervals in a cell in which the transmission of one or more E-DCH frames has been detected, exluding frames that are not decoded due to lack of hardware to decode the frame.

Data Source

NodeB

Source Field

pmNoActive10msIntervalsEulTti10

Source Section

EDchResources

pmNoActive2msFramesEul

Sum of used 2 ms frames (TTI) that receive E-DCH data in a cell during an ROP for all E-DCH users, excluding frames that are not decoded due to lack of hardware.

Data Source

NodeB

Source Field

pmNoActive2msFramesEul

Source Section

EDchResources

pmNoActive2msIntervalsEul

Counter for the total amount of 2 ms intervals in a cell in which the transmission of one or more E-DCH frames has been detected, excluding frames that are not decoded due to lack of hardware to decode the frame.

Data Source

NodeB

Source Field

pmNoActive2msIntervalsEul

Source Section

EDchResources

pmNoActive2msIntervalsEulTti2

Counter for the total amount of 2 ms intervals in a cell in which the transmission of one or more E-DCH frames has been detected, excluding frames that are not decoded due to lack of hardware to decode the frame.

Data Source

NodeB

Source Field

pmNoActive2msIntervalsEulTti2

Source Section

EDchResources

pmNoAllowedEul

PEG Counter used to measure number of times that no E-DCH traffic is allowed owing to uplink interference.

Data Source

NodeB

Source Field

pmNoAllowedEul

Source Section

EDchResources

pmNoiseFloor_00

This counter is used to show the used thermal noise level value in the Rise over Thermal (RoT) measurement. Number of samples in range < -114dBm

Data Source

NodeB

Source Field

pmNoiseFloor

Source Section

EDchResources

pmNoiseFloor_01

This counter is used to show the used thermal noise level value in the Rise over Thermal (RoT) measurement. Number of samples in range -114..-113dBm

Data Source

NodeB

Source Field

pmNoiseFloor

Source Section

EDchResources

pmNoiseFloor_02

This counter is used to show the used thermal noise level value in the Rise over Thermal (RoT) measurement. Number of samples in range -113..-112dBm

Data Source

NodeB

Source Field

pmNoiseFloor

Source Section

EDchResources

pmNoiseFloor_03

This counter is used to show the used thermal noise level value in the Rise over Thermal (RoT) measurement. Number of samples in range -112..-111dBm

Data Source

NodeB

Source Field

pmNoiseFloor

Source Section

EDchResources

pmNoiseFloor_04

This counter is used to show the used thermal noise level value in the Rise over Thermal (RoT) measurement. Number of samples in range -111..-110dBm

Data Source

NodeB

Source Field

pmNoiseFloor

Source Section

EDchResources

pmNoiseFloor_05

This counter is used to show the used thermal noise level value in the Rise over Thermal (RoT) measurement. Number of samples in range -110..-109dBm

Data Source

NodeB

Source Field

pmNoiseFloor

Source Section

EDchResources

pmNoiseFloor_06

This counter is used to show the used thermal noise level value in the Rise over Thermal (RoT) measurement. Number of samples in range -109..-108dBm

Data Source

NodeB

Source Field

pmNoiseFloor

Source Section

EDchResources

pmNoiseFloor_07

This counter is used to show the used thermal noise level value in the Rise over Thermal (RoT) measurement. Number of samples in range -108..-107dBm

Data Source

NodeB

Source Field

pmNoiseFloor

Source Section

EDchResources

pmNoiseFloor_08

This counter is used to show the used thermal noise level value in the Rise over Thermal (RoT) measurement. Number of samples in range -107..-106dBm

Data Source

NodeB

Source Field

pmNoiseFloor

Source Section

EDchResources

pmNoiseFloor_09

This counter is used to show the used thermal noise level value in the Rise over Thermal (RoT) measurement. Number of samples in range -106..-105dBm

Data Source

NodeB

Source Field

pmNoiseFloor

Source Section

EDchResources

pmNoiseFloor_10

This counter is used to show the used thermal noise level value in the Rise over Thermal (RoT) measurement. Number of samples in range -105..-104dBm

Data Source

NodeB

Source Field

pmNoiseFloor

Source Section

EDchResources

pmNoiseFloor_11

This counter is used to show the used thermal noise level value in the Rise over Thermal (RoT) measurement. Number of samples in range -104..-103dBm

Data Source

NodeB

Source Field

pmNoiseFloor

Source Section

EDchResources

pmNoiseFloor_12

This counter is used to show the used thermal noise level value in the Rise over Thermal (RoT) measurement. Number of samples in range -103..-102dBm

Data Source

NodeB

Source Field

pmNoiseFloor

Source Section

EDchResources

pmNoiseFloor_13

This counter is used to show the used thermal noise level value in the Rise over Thermal (RoT) measurement. Number of samples in range -102..-101dBm

Data Source

NodeB

Source Field

pmNoiseFloor

Source Section

EDchResources

pmNoiseFloor_14

This counter is used to show the used thermal noise level value in the Rise over Thermal (RoT) measurement. Number of samples in range -101..-100dBm

Data Source

NodeB

Source Field

pmNoiseFloor

Source Section

EDchResources

pmNoiseFloor_15

This counter is used to show the used thermal noise level value in the Rise over Thermal (RoT) measurement. Number of samples in range -100..-99dBm

Data Source

NodeB

Source Field

pmNoiseFloor

Source Section

EDchResources

pmNoiseFloor_16

This counter is used to show the used thermal noise level value in the Rise over Thermal (RoT) measurement. Number of samples in range -99..-98dBm

Data Source

NodeB

Source Field

pmNoiseFloor

Source Section

EDchResources

pmNoiseFloor_17

This counter is used to show the used thermal noise level value in the Rise over Thermal (RoT) measurement. Number of samples in range -98..-97dBm

Data Source

NodeB

Source Field

pmNoiseFloor

Source Section

EDchResources

pmNoiseFloor_18

This counter is used to show the used thermal noise level value in the Rise over Thermal (RoT) measurement. Number of samples in range -97..-96dBm

Data Source

NodeB

Source Field

pmNoiseFloor

Source Section

EDchResources

pmNoiseFloor_19

This counter is used to show the used thermal noise level value in the Rise over Thermal (RoT) measurement. Number of samples in range -96..-95dBm

Data Source

NodeB

Source Field

pmNoiseFloor

Source Section

EDchResources

pmNoiseFloor_20

This counter is used to show the used thermal noise level value in the Rise over Thermal (RoT) measurement. Number of samples in range -95..-94dBm

Data Source

NodeB

Source Field

pmNoiseFloor

Source Section

EDchResources

pmNoiseFloor_21

This counter is used to show the used thermal noise level value in the Rise over Thermal (RoT) measurement. Number of samples in range -94..-93dBm

Data Source

NodeB

Source Field

pmNoiseFloor

Source Section

EDchResources

pmNoiseFloor_22

This counter is used to show the used thermal noise level value in the Rise over Thermal (RoT) measurement. Number of samples in range -93..-92dBm

Data Source

NodeB

Source Field

pmNoiseFloor

Source Section

EDchResources

pmNoiseFloor_23

This counter is used to show the used thermal noise level value in the Rise over Thermal (RoT) measurement. Number of samples in range -92..-91dBm

Data Source

NodeB

Source Field

pmNoiseFloor

Source Section

EDchResources

pmNoiseFloor_24

This counter is used to show the used thermal noise level value in the Rise over Thermal (RoT) measurement. Number of samples in range -91..-90dBm

Data Source

NodeB

Source Field

pmNoiseFloor

Source Section

EDchResources

pmNoiseFloor_25

This counter is used to show the used thermal noise level value in the Rise over Thermal (RoT) measurement. Number of samples in range -90..-89dBm

Data Source

NodeB

Source Field

pmNoiseFloor

Source Section

EDchResources

pmNoiseFloor_26

This counter is used to show the used thermal noise level value in the Rise over Thermal (RoT) measurement. Number of samples in range -89..-88dBm

Data Source

NodeB

Source Field

pmNoiseFloor

Source Section

EDchResources

pmNoiseFloor_27

This counter is used to show the used thermal noise level value in the Rise over Thermal (RoT) measurement. Number of samples in range -88..-87dBm

Data Source

NodeB

Source Field

pmNoiseFloor

Source Section

EDchResources

pmNoiseFloor_28

This counter is used to show the used thermal noise level value in the Rise over Thermal (RoT) measurement. Number of samples in range -87..-86dBm

Data Source

NodeB

Source Field

pmNoiseFloor

Source Section

EDchResources

pmNoiseFloor_29

This counter is used to show the used thermal noise level value in the Rise over Thermal (RoT) measurement. Number of samples in range -86..-85dBm

Data Source

NodeB

Source Field

pmNoiseFloor

Source Section

EDchResources

pmNoiseFloor_30

This counter is used to show the used thermal noise level value in the Rise over Thermal (RoT) measurement. Number of samples in range -85..-84dBm

Data Source

NodeB

Source Field

pmNoiseFloor

Source Section

EDchResources

pmNoiseFloor_31

This counter is used to show the used thermal noise level value in the Rise over Thermal (RoT) measurement. Number of samples in range -84..-83dBm

Data Source

NodeB

Source Field

pmNoiseFloor

Source Section

EDchResources

pmNoiseFloor_32

This counter is used to show the used thermal noise level value in the Rise over Thermal (RoT) measurement. Number of samples in range -83..-82dBm

Data Source

NodeB

Source Field

pmNoiseFloor

Source Section

EDchResources

pmNoiseFloor_33

This counter is used to show the used thermal noise level value in the Rise over Thermal (RoT) measurement. Number of samples in range -82..-81dBm

Data Source

NodeB

Source Field

pmNoiseFloor

Source Section

EDchResources

pmNoiseFloor_34

This counter is used to show the used thermal noise level value in the Rise over Thermal (RoT) measurement. Number of samples in range -81..-80dBm

Data Source

NodeB

Source Field

pmNoiseFloor

Source Section

EDchResources

pmNoiseFloor_35

This counter is used to show the used thermal noise level value in the Rise over Thermal (RoT) measurement. Number of samples in range -80..-79dBm

Data Source

NodeB

Source Field

pmNoiseFloor

Source Section

EDchResources

pmNoiseFloor_36

This counter is used to show the used thermal noise level value in the Rise over Thermal (RoT) measurement. Number of samples in range -79..-78dBm

Data Source

NodeB

Source Field

pmNoiseFloor

Source Section

EDchResources

pmNoiseFloor_37

This counter is used to show the used thermal noise level value in the Rise over Thermal (RoT) measurement. Number of samples in range -78..-77dBm

Data Source

NodeB

Source Field

pmNoiseFloor

Source Section

EDchResources

pmNoiseFloor_38

This counter is used to show the used thermal noise level value in the Rise over Thermal (RoT) measurement. Number of samples in range -77..-76dBm

Data Source

NodeB

Source Field

pmNoiseFloor

Source Section

EDchResources

pmNoiseFloor_39

This counter is used to show the used thermal noise level value in the Rise over Thermal (RoT) measurement. Number of samples in range -76..-75dBm

Data Source

NodeB

Source Field

pmNoiseFloor

Source Section

EDchResources

pmNoiseFloor_40

This counter is used to show the used thermal noise level value in the Rise over Thermal (RoT) measurement. Number of samples in range -75..-74dBm

Data Source

NodeB

Source Field

pmNoiseFloor

Source Section

EDchResources

pmNoiseFloor_41

This counter is used to show the used thermal noise level value in the Rise over Thermal (RoT) measurement. Number of samples in range -74..-73dBm

Data Source

NodeB

Source Field

pmNoiseFloor

Source Section

EDchResources

pmNoiseFloor_42

This counter is used to show the used thermal noise level value in the Rise over Thermal (RoT) measurement. Number of samples in range -73..-72dBm

Data Source

NodeB

Source Field

pmNoiseFloor

Source Section

EDchResources

pmNoiseFloor_43

This counter is used to show the used thermal noise level value in the Rise over Thermal (RoT) measurement. Number of samples in range -72..-71dBm

Data Source

NodeB

Source Field

pmNoiseFloor

Source Section

EDchResources

pmNoiseFloor_44

This counter is used to show the used thermal noise level value in the Rise over Thermal (RoT) measurement. Number of samples in range -71..-70dBm

Data Source

NodeB

Source Field

pmNoiseFloor

Source Section

EDchResources

pmNoiseFloor_45

This counter is used to show the used thermal noise level value in the Rise over Thermal (RoT) measurement. Number of samples in range -70..-69dBm

Data Source

NodeB

Source Field

pmNoiseFloor

Source Section

EDchResources

pmNoiseFloor_46

This counter is used to show the used thermal noise level value in the Rise over Thermal (RoT) measurement. Number of samples in range -69..-68dBm

Data Source

NodeB

Source Field

pmNoiseFloor

Source Section

EDchResources

pmNoiseFloor_47

This counter is used to show the used thermal noise level value in the Rise over Thermal (RoT) measurement. Number of samples in range -68..-67dBm

Data Source

NodeB

Source Field

pmNoiseFloor

Source Section

EDchResources

pmNoiseFloor_48

This counter is used to show the used thermal noise level value in the Rise over Thermal (RoT) measurement. Number of samples in range -67..-66dBm

Data Source

NodeB

Source Field

pmNoiseFloor

Source Section

EDchResources

pmNoiseFloor_49

This counter is used to show the used thermal noise level value in the Rise over Thermal (RoT) measurement. Number of samples in range -66..-65dBm

Data Source

NodeB

Source Field

pmNoiseFloor

Source Section

EDchResources

pmNoiseFloor_50

This counter is used to show the used thermal noise level value in the Rise over Thermal (RoT) measurement. Number of samples in range -65..-64dBm

Data Source

NodeB

Source Field

pmNoiseFloor

Source Section

EDchResources

pmNoiseFloor_51

This counter is used to show the used thermal noise level value in the Rise over Thermal (RoT) measurement. Number of samples in range -64..-63dBm

Data Source

NodeB

Source Field

pmNoiseFloor

Source Section

EDchResources

pmNoiseFloor_52

This counter is used to show the used thermal noise level value in the Rise over Thermal (RoT) measurement. Number of samples in range -63..-62dBm

Data Source

NodeB

Source Field

pmNoiseFloor

Source Section

EDchResources

pmNoiseFloor_53

This counter is used to show the used thermal noise level value in the Rise over Thermal (RoT) measurement. Number of samples in range -62..-61dBm

Data Source

NodeB

Source Field

pmNoiseFloor

Source Section

EDchResources

pmNoiseFloor_54

This counter is used to show the used thermal noise level value in the Rise over Thermal (RoT) measurement. Number of samples in range -61..-60dBm

Data Source

NodeB

Source Field

pmNoiseFloor

Source Section

EDchResources

pmNoiseFloor_55

This counter is used to show the used thermal noise level value in the Rise over Thermal (RoT) measurement. Number of samples in range >= -60dBm

Data Source

NodeB

Source Field

pmNoiseFloor

Source Section

EDchResources

pmNoSchEdchEul_00

This counter shows the total number of simultaneous scheduled E-DCH users having a rate >0 kbps. Number of users in range 0..1

Data Source

NodeB

Source Field

pmNoSchEdchEul

Source Section

EDchResources

pmNoSchEdchEul_01

This counter shows the total number of simultaneous scheduled E-DCH users having a rate >0 kbps. Number of users in range 1..2

Data Source

NodeB

Source Field

pmNoSchEdchEul

Source Section

EDchResources

pmNoSchEdchEul_02

This counter shows the total number of simultaneous scheduled E-DCH users having a rate >0 kbps. Number of users in range 2..3

Data Source

NodeB

Source Field

pmNoSchEdchEul

Source Section

EDchResources

pmNoSchEdchEul_03

This counter shows the total number of simultaneous scheduled E-DCH users having a rate >0 kbps. Number of users in range 3..4

Data Source

NodeB

Source Field

pmNoSchEdchEul

Source Section

EDchResources

pmNoSchEdchEul_04

This counter shows the total number of simultaneous scheduled E-DCH users having a rate >0 kbps. Number of users in range 4..5

Data Source

NodeB

Source Field

pmNoSchEdchEul

Source Section

EDchResources

pmNoSchEdchEul_05

This counter shows the total number of simultaneous scheduled E-DCH users having a rate >0 kbps. Number of users in range 5..6

Data Source

NodeB

Source Field

pmNoSchEdchEul

Source Section

EDchResources

pmNoSchEdchEul_06

This counter shows the total number of simultaneous scheduled E-DCH users having a rate >0 kbps. Number of users in range 6..7

Data Source

NodeB

Source Field

pmNoSchEdchEul

Source Section

EDchResources

pmNoSchEdchEul_07

This counter shows the total number of simultaneous scheduled E-DCH users having a rate >0 kbps. Number of users in range 7..8

Data Source

NodeB

Source Field

pmNoSchEdchEul

Source Section

EDchResources

pmNoSchEdchEul_08

This counter shows the total number of simultaneous scheduled E-DCH users having a rate >0 kbps. Number of users in range 8..9

Data Source

NodeB

Source Field

pmNoSchEdchEul

Source Section

EDchResources

pmNoSchEdchEul_09

This counter shows the total number of simultaneous scheduled E-DCH users having a rate >0 kbps. Number of users in range 9..10

Data Source

NodeB

Source Field

pmNoSchEdchEul

Source Section

EDchResources

pmNoSchEdchEul_10

This counter shows the total number of simultaneous scheduled E-DCH users having a rate >0 kbps. Number of users in range 10..15

Data Source

NodeB

Source Field

pmNoSchEdchEul

Source Section

EDchResources

pmNoSchEdchEul_11

This counter shows the total number of simultaneous scheduled E-DCH users having a rate >0 kbps. Number of users in range 15..20

Data Source

NodeB

Source Field

pmNoSchEdchEul

Source Section

EDchResources

pmNoSchEdchEul_12

This counter shows the total number of simultaneous scheduled E-DCH users having a rate >0 kbps. Number of users in range 20..25

Data Source

NodeB

Source Field

pmNoSchEdchEul

Source Section

EDchResources

pmNoSchEdchEul_13

This counter shows the total number of simultaneous scheduled E-DCH users having a rate >0 kbps. Number of users in range 25..30

Data Source

NodeB

Source Field

pmNoSchEdchEul

Source Section

EDchResources

pmNoSchEdchEul_14

This counter shows the total number of simultaneous scheduled E-DCH users having a rate >0 kbps. Number of users in range 30..40

Data Source

NodeB

Source Field

pmNoSchEdchEul

Source Section

EDchResources

pmNoSchEdchEul_15

This counter shows the total number of simultaneous scheduled E-DCH users having a rate >0 kbps. Number of users in range 40..50

Data Source

NodeB

Source Field

pmNoSchEdchEul

Source Section

EDchResources

pmNoSchEdchEul_16

This counter shows the total number of simultaneous scheduled E-DCH users having a rate >0 kbps. Number of users in range 50..60

Data Source

NodeB

Source Field

pmNoSchEdchEul

Source Section

EDchResources

pmNoSchEdchEul_17

This counter shows the total number of simultaneous scheduled E-DCH users having a rate >0 kbps. Number of users in range 60..70

Data Source

NodeB

Source Field

pmNoSchEdchEul

Source Section

EDchResources

pmNoSchEdchEul_18

This counter shows the total number of simultaneous scheduled E-DCH users having a rate >0 kbps. Number of users in range 70..80

Data Source

NodeB

Source Field

pmNoSchEdchEul

Source Section

EDchResources

pmNoSchEdchEul_19

This counter shows the total number of simultaneous scheduled E-DCH users having a rate >0 kbps. Number of users in range 80..90

Data Source

NodeB

Source Field

pmNoSchEdchEul

Source Section

EDchResources

pmNoSchEdchEul_20

This counter shows the total number of simultaneous scheduled E-DCH users having a rate >0 kbps. Number of users in range >= 90

Data Source

NodeB

Source Field

pmNoSchEdchEul

Source Section

EDchResources

pmNoUlUuLoadLimitEul

PEG Counter for the number of times a scheduling decision is taken to increase the Uu rate of an E-DCH user and there is a need to decrease the Uu rate for another E-DCH user owing to UL Uu load limitations.

Data Source

NodeB

Source Field

pmNoUlUuLoadLimitEul

Source Section

EDchResources

pmOwnUuLoad_00

Counter per cell for the power-controlled noise rise caused by the intra-cell interference that affects the Uu load. Number of samples in range 0..0.2dB

Data Source

NodeB

Source Field

pmOwnUuLoad

Source Section

EDchResources

pmOwnUuLoad_01

Counter per cell for the power-controlled noise rise caused by the intra-cell interference that affects the Uu load. Number of samples in range 0.2..0.4dB

Data Source

NodeB

Source Field

pmOwnUuLoad

Source Section

EDchResources

pmOwnUuLoad_02

Counter per cell for the power-controlled noise rise caused by the intra-cell interference that affects the Uu load. Number of samples in range 0.4..0.6dB

Data Source

NodeB

Source Field

pmOwnUuLoad

Source Section

EDchResources

pmOwnUuLoad_03

Counter per cell for the power-controlled noise rise caused by the intra-cell interference that affects the Uu load. Number of samples in range 0.6..0.8dB

Data Source

NodeB

Source Field

pmOwnUuLoad

Source Section

EDchResources

pmOwnUuLoad_04

Counter per cell for the power-controlled noise rise caused by the intra-cell interference that affects the Uu load. Number of samples in range 0.8..1.0dB

Data Source

NodeB

Source Field

pmOwnUuLoad

Source Section

EDchResources

pmOwnUuLoad_05

Counter per cell for the power-controlled noise rise caused by the intra-cell interference that affects the Uu load. Number of samples in range 1.0..1.2dB

Data Source

NodeB

Source Field

pmOwnUuLoad

Source Section

EDchResources

pmOwnUuLoad_06

Counter per cell for the power-controlled noise rise caused by the intra-cell interference that affects the Uu load. Number of samples in range 1.2..1.4dB

Data Source

NodeB

Source Field

pmOwnUuLoad

Source Section

EDchResources

pmOwnUuLoad_07

Counter per cell for the power-controlled noise rise caused by the intra-cell interference that affects the Uu load. Number of samples in range 1.4..1.6dB

Data Source

NodeB

Source Field

pmOwnUuLoad

Source Section

EDchResources

pmOwnUuLoad_08

Counter per cell for the power-controlled noise rise caused by the intra-cell interference that affects the Uu load. Number of samples in range 1.6..1.8dB

Data Source

NodeB

Source Field

pmOwnUuLoad

Source Section

EDchResources

pmOwnUuLoad_09

Counter per cell for the power-controlled noise rise caused by the intra-cell interference that affects the Uu load. Number of samples in range 1.8..2.0dB

Data Source

NodeB

Source Field

pmOwnUuLoad

Source Section

EDchResources

pmOwnUuLoad_10

Counter per cell for the power-controlled noise rise caused by the intra-cell interference that affects the Uu load. Number of samples in range 2.0..2.2dB

Data Source

NodeB

Source Field

pmOwnUuLoad

Source Section

EDchResources

pmOwnUuLoad_11

Counter per cell for the power-controlled noise rise caused by the intra-cell interference that affects the Uu load. Number of samples in range 2.2..2.4dB

Data Source

NodeB

Source Field

pmOwnUuLoad

Source Section

EDchResources

pmOwnUuLoad_12

Counter per cell for the power-controlled noise rise caused by the intra-cell interference that affects the Uu load. Number of samples in range 2.4..2.6dB

Data Source

NodeB

Source Field

pmOwnUuLoad

Source Section

EDchResources

pmOwnUuLoad_13

Counter per cell for the power-controlled noise rise caused by the intra-cell interference that affects the Uu load. Number of samples in range 2.6..2.8dB

Data Source

NodeB

Source Field

pmOwnUuLoad

Source Section

EDchResources

pmOwnUuLoad_14

Counter per cell for the power-controlled noise rise caused by the intra-cell interference that affects the Uu load. Number of samples in range 2.8..3.0dB

Data Source

NodeB

Source Field

pmOwnUuLoad

Source Section

EDchResources

pmOwnUuLoad_15

Counter per cell for the power-controlled noise rise caused by the intra-cell interference that affects the Uu load. Number of samples in range 3.0..3.2dB

Data Source

NodeB

Source Field

pmOwnUuLoad

Source Section

EDchResources

pmOwnUuLoad_16

Counter per cell for the power-controlled noise rise caused by the intra-cell interference that affects the Uu load. Number of samples in range 3.2..3.4dB

Data Source

NodeB

Source Field

pmOwnUuLoad

Source Section

EDchResources

pmOwnUuLoad_17

Counter per cell for the power-controlled noise rise caused by the intra-cell interference that affects the Uu load. Number of samples in range 3.4..3.6dB

Data Source

NodeB

Source Field

pmOwnUuLoad

Source Section

EDchResources

pmOwnUuLoad_18

Counter per cell for the power-controlled noise rise caused by the intra-cell interference that affects the Uu load. Number of samples in range 3.6..3.8dB

Data Source

NodeB

Source Field

pmOwnUuLoad

Source Section

EDchResources

pmOwnUuLoad_19

Counter per cell for the power-controlled noise rise caused by the intra-cell interference that affects the Uu load. Number of samples in range 3.8..4.0dB

Data Source

NodeB

Source Field

pmOwnUuLoad

Source Section

EDchResources

pmOwnUuLoad_20

Counter per cell for the power-controlled noise rise caused by the intra-cell interference that affects the Uu load. Number of samples in range 4.0..4.2dB

Data Source

NodeB

Source Field

pmOwnUuLoad

Source Section

EDchResources

pmOwnUuLoad_21

Counter per cell for the power-controlled noise rise caused by the intra-cell interference that affects the Uu load. Number of samples in range 4.2..4.4dB

Data Source

NodeB

Source Field

pmOwnUuLoad

Source Section

EDchResources

pmOwnUuLoad_22

Counter per cell for the power-controlled noise rise caused by the intra-cell interference that affects the Uu load. Number of samples in range 4.4..4.6dB

Data Source

NodeB

Source Field

pmOwnUuLoad

Source Section

EDchResources

pmOwnUuLoad_23

Counter per cell for the power-controlled noise rise caused by the intra-cell interference that affects the Uu load. Number of samples in range 4.6..4.8dB

Data Source

NodeB

Source Field

pmOwnUuLoad

Source Section

EDchResources

pmOwnUuLoad_24

Counter per cell for the power-controlled noise rise caused by the intra-cell interference that affects the Uu load. Number of samples in range 4.8..5.0dB

Data Source

NodeB

Source Field

pmOwnUuLoad

Source Section

EDchResources

pmOwnUuLoad_25

Counter per cell for the power-controlled noise rise caused by the intra-cell interference that affects the Uu load. Number of samples in range 5.0..5.2dB

Data Source

NodeB

Source Field

pmOwnUuLoad

Source Section

EDchResources

pmOwnUuLoad_26

Counter per cell for the power-controlled noise rise caused by the intra-cell interference that affects the Uu load. Number of samples in range 5.2..5.4dB

Data Source

NodeB

Source Field

pmOwnUuLoad

Source Section

EDchResources

pmOwnUuLoad_27

Counter per cell for the power-controlled noise rise caused by the intra-cell interference that affects the Uu load. Number of samples in range 5.4..5.6dB

Data Source

NodeB

Source Field

pmOwnUuLoad

Source Section

EDchResources

pmOwnUuLoad_28

Counter per cell for the power-controlled noise rise caused by the intra-cell interference that affects the Uu load. Number of samples in range 5.6..5.8dB

Data Source

NodeB

Source Field

pmOwnUuLoad

Source Section

EDchResources

pmOwnUuLoad_29

Counter per cell for the power-controlled noise rise caused by the intra-cell interference that affects the Uu load. Number of samples in range 5.8..6.0dB

Data Source

NodeB

Source Field

pmOwnUuLoad

Source Section

EDchResources

pmOwnUuLoad_30

Counter per cell for the power-controlled noise rise caused by the intra-cell interference that affects the Uu load. Number of samples in range 6.0..6.2dB

Data Source

NodeB

Source Field

pmOwnUuLoad

Source Section

EDchResources

pmOwnUuLoad_31

Counter per cell for the power-controlled noise rise caused by the intra-cell interference that affects the Uu load. Number of samples in range 6.2..6.4dB

Data Source

NodeB

Source Field

pmOwnUuLoad

Source Section

EDchResources

pmOwnUuLoad_32

Counter per cell for the power-controlled noise rise caused by the intra-cell interference that affects the Uu load. Number of samples in range 6.4..6.6dB

Data Source

NodeB

Source Field

pmOwnUuLoad

Source Section

EDchResources

pmOwnUuLoad_33

Counter per cell for the power-controlled noise rise caused by the intra-cell interference that affects the Uu load. Number of samples in range 6.6..6.8dB

Data Source

NodeB

Source Field

pmOwnUuLoad

Source Section

EDchResources

pmOwnUuLoad_34

Counter per cell for the power-controlled noise rise caused by the intra-cell interference that affects the Uu load. Number of samples in range 6.8..7.0dB

Data Source

NodeB

Source Field

pmOwnUuLoad

Source Section

EDchResources

pmOwnUuLoad_35

Counter per cell for the power-controlled noise rise caused by the intra-cell interference that affects the Uu load. Number of samples in range 7.0..7.2dB

Data Source

NodeB

Source Field

pmOwnUuLoad

Source Section

EDchResources

pmOwnUuLoad_36

Counter per cell for the power-controlled noise rise caused by the intra-cell interference that affects the Uu load. Number of samples in range 7.2..7.4dB

Data Source

NodeB

Source Field

pmOwnUuLoad

Source Section

EDchResources

pmOwnUuLoad_37

Counter per cell for the power-controlled noise rise caused by the intra-cell interference that affects the Uu load. Number of samples in range 7.4..7.6dB

Data Source

NodeB

Source Field

pmOwnUuLoad

Source Section

EDchResources

pmOwnUuLoad_38

Counter per cell for the power-controlled noise rise caused by the intra-cell interference that affects the Uu load. Number of samples in range 7.6..7.8dB

Data Source

NodeB

Source Field

pmOwnUuLoad

Source Section

EDchResources

pmOwnUuLoad_39

Counter per cell for the power-controlled noise rise caused by the intra-cell interference that affects the Uu load. Number of samples in range 7.8..8.0dB

Data Source

NodeB

Source Field

pmOwnUuLoad

Source Section

EDchResources

pmOwnUuLoad_40

Counter per cell for the power-controlled noise rise caused by the intra-cell interference that affects the Uu load. Number of samples in range 8.0..8.2dB

Data Source

NodeB

Source Field

pmOwnUuLoad

Source Section

EDchResources

pmOwnUuLoad_41

Counter per cell for the power-controlled noise rise caused by the intra-cell interference that affects the Uu load. Number of samples in range 8.2..8.4dB

Data Source

NodeB

Source Field

pmOwnUuLoad

Source Section

EDchResources

pmOwnUuLoad_42

Counter per cell for the power-controlled noise rise caused by the intra-cell interference that affects the Uu load. Number of samples in range 8.4..8.6dB

Data Source

NodeB

Source Field

pmOwnUuLoad

Source Section

EDchResources

pmOwnUuLoad_43

Counter per cell for the power-controlled noise rise caused by the intra-cell interference that affects the Uu load. Number of samples in range 8.6..8.8dB

Data Source

NodeB

Source Field

pmOwnUuLoad

Source Section

EDchResources

pmOwnUuLoad_44

Counter per cell for the power-controlled noise rise caused by the intra-cell interference that affects the Uu load. Number of samples in range 8.8..9.0dB

Data Source

NodeB

Source Field

pmOwnUuLoad

Source Section

EDchResources

pmOwnUuLoad_45

Counter per cell for the power-controlled noise rise caused by the intra-cell interference that affects the Uu load. Number of samples in range 9.0..9.2dB

Data Source

NodeB

Source Field

pmOwnUuLoad

Source Section

EDchResources

pmOwnUuLoad_46

Counter per cell for the power-controlled noise rise caused by the intra-cell interference that affects the Uu load. Number of samples in range 9.2..9.4dB

Data Source

NodeB

Source Field

pmOwnUuLoad

Source Section

EDchResources

pmOwnUuLoad_47

Counter per cell for the power-controlled noise rise caused by the intra-cell interference that affects the Uu load. Number of samples in range 9.4..9.6dB

Data Source

NodeB

Source Field

pmOwnUuLoad

Source Section

EDchResources

pmOwnUuLoad_48

Counter per cell for the power-controlled noise rise caused by the intra-cell interference that affects the Uu load. Number of samples in range 9.6..9.8dB

Data Source

NodeB

Source Field

pmOwnUuLoad

Source Section

EDchResources

pmOwnUuLoad_49

Counter per cell for the power-controlled noise rise caused by the intra-cell interference that affects the Uu load. Number of samples in range 9.8..10dB

Data Source

NodeB

Source Field

pmOwnUuLoad

Source Section

EDchResources

pmOwnUuLoad_50

Counter per cell for the power-controlled noise rise caused by the intra-cell interference that affects the Uu load. Number of samples in range >= 10dB

Data Source

NodeB

Source Field

pmOwnUuLoad

Source Section

EDchResources

pmSamplesCapacityServEDchUsers

Number of samples in pmSumCapacityServEDchUsers (that is, pmSamplesCapacityServEDchUsers = pmSamplesCapacityServEDchUsers + 1, whenever pmSumCapacityServEDchUsers is to be updated).

Data Source

NodeB

Source Field

pmSamplesCapacityServEDchUsers

Source Section

EDchResources

pmSumAckedBitsCellEul

(Removed in RP14.2)PEG counter for the total amount of acked data received in kbits after HARQ process on MAC-e level for all users in a cell. Note that k = 1000.

Data Source

NodeB

Source Field

pmSumAckedBitsCellEul

Source Section

EDchResources

pmSumAckedBitsCellEulTti10

Counter for the total amount of acked data received in kbits after HARQ process on MAC-e level for all 10 ms TTI users in a cell. Note that k = 1000.

Data Source

NodeB

Source Field

pmSumAckedBitsCellEulTti10

Source Section

EDchResources

pmSumAckedBitsCellEulTti2

Counter for the total amount of acked data received in kbits after HARQ process on MAC-e level for all 2 ms TTI users in a cell. Note that k = 1000.

Data Source

NodeB

Source Field

pmSumAckedBitsCellEulTti2

Source Section

EDchResources

pmSumCapacityServEDchUsers

Aggregate of all sample values (measurement_value) recorded within the ROP for number of Serving E-DCH users.

Data Source

NodeB

Source Field

pmSumCapacityServEDchUsers

Source Section

EDchResources

pmSumNackedBitsCellEul

(Removed in RP14.2)PEG counter for the total amount of nacked data received in kbits after HARQ process on MAC-e level for all users in a cell.Note that k = 1000.

Data Source

NodeB

Source Field

pmSumNackedBitsCellEul

Source Section

EDchResources

pmSumNackedBitsCellEulTti10

Counter for the total amount of nacked data received in kbits after HARQ process on MAC-e level for all 10 ms TTI users in a cell, excluding data that is NACKed due to lack of hardware to decode the frame. Note that k = 1000.

Data Source

NodeB

Source Field

pmSumNackedBitsCellEulTti10

Source Section

EDchResources

pmSumNackedBitsCellEulTti2

Counter for the total amount of nacked data received in kbits after HARQ process on MAC-e level for all 2 ms TTI users in a cell, excluding data that is NACKed due to lack of hardware to decode the frame. Note that k = 1000.

Data Source

NodeB

Source Field

pmSumNackedBitsCellEulTti2

Source Section

EDchResources

pmSumSqrCapacityServEDchUsers

Aggregate of the squares of the sample values (measurement_value) in pmSumCapacityServEDchUsers that is, pmSumSqrCapacityServEDchUSers = pmSumSqrCapacityServEDchUsers + sqr(measurement_value).

Data Source

NodeB

Source Field

pmSumSqrCapacityServEDchUsers

Source Section

EDchResources

pmTotalRotCoverage_00

Counter per cell for the total Rise over Thermal (RoT) (including all uplink traffic and external interference) that affects the coverage. Number of samples in range <0.5dB

Data Source

NodeB

Source Field

pmTotalRotCoverage

Source Section

EDchResources

pmTotalRotCoverage_01

Counter per cell for the total Rise over Thermal (RoT) (including all uplink traffic and external interference) that affects the coverage. Number of samples in range 0.5..1.0dB

Data Source

NodeB

Source Field

pmTotalRotCoverage

Source Section

EDchResources

pmTotalRotCoverage_02

Counter per cell for the total Rise over Thermal (RoT) (including all uplink traffic and external interference) that affects the coverage. Number of samples in range 1.0..1.5dB

Data Source

NodeB

Source Field

pmTotalRotCoverage

Source Section

EDchResources

pmTotalRotCoverage_03

Counter per cell for the total Rise over Thermal (RoT) (including all uplink traffic and external interference) that affects the coverage. Number of samples in range 1.5..2.0dB

Data Source

NodeB

Source Field

pmTotalRotCoverage

Source Section

EDchResources

pmTotalRotCoverage_04

Counter per cell for the total Rise over Thermal (RoT) (including all uplink traffic and external interference) that affects the coverage. Number of samples in range 2.0..2.5dB

Data Source

NodeB

Source Field

pmTotalRotCoverage

Source Section

EDchResources

pmTotalRotCoverage_05

Counter per cell for the total Rise over Thermal (RoT) (including all uplink traffic and external interference) that affects the coverage. Number of samples in range 2.5..3.0dB

Data Source

NodeB

Source Field

pmTotalRotCoverage

Source Section

EDchResources

pmTotalRotCoverage_06

Counter per cell for the total Rise over Thermal (RoT) (including all uplink traffic and external interference) that affects the coverage. Number of samples in range 3.0..3.5dB

Data Source

NodeB

Source Field

pmTotalRotCoverage

Source Section

EDchResources

pmTotalRotCoverage_07

Counter per cell for the total Rise over Thermal (RoT) (including all uplink traffic and external interference) that affects the coverage. Number of samples in range 3.5..4.0dB

Data Source

NodeB

Source Field

pmTotalRotCoverage

Source Section

EDchResources

pmTotalRotCoverage_08

Counter per cell for the total Rise over Thermal (RoT) (including all uplink traffic and external interference) that affects the coverage. Number of samples in range 4.0..4.5dB

Data Source

NodeB

Source Field

pmTotalRotCoverage

Source Section

EDchResources

pmTotalRotCoverage_09

Counter per cell for the total Rise over Thermal (RoT) (including all uplink traffic and external interference) that affects the coverage. Number of samples in range 4.5..5.0dB

Data Source

NodeB

Source Field

pmTotalRotCoverage

Source Section

EDchResources

pmTotalRotCoverage_10

Counter per cell for the total Rise over Thermal (RoT) (including all uplink traffic and external interference) that affects the coverage. Number of samples in range 5.0..5.5dB

Data Source

NodeB

Source Field

pmTotalRotCoverage

Source Section

EDchResources

pmTotalRotCoverage_11

Counter per cell for the total Rise over Thermal (RoT) (including all uplink traffic and external interference) that affects the coverage. Number of samples in range 5.5..6.0dB

Data Source

NodeB

Source Field

pmTotalRotCoverage

Source Section

EDchResources

pmTotalRotCoverage_12

Counter per cell for the total Rise over Thermal (RoT) (including all uplink traffic and external interference) that affects the coverage. Number of samples in range 6.0..6.5dB

Data Source

NodeB

Source Field

pmTotalRotCoverage

Source Section

EDchResources

pmTotalRotCoverage_13

Counter per cell for the total Rise over Thermal (RoT) (including all uplink traffic and external interference) that affects the coverage. Number of samples in range 6.5..7.0dB

Data Source

NodeB

Source Field

pmTotalRotCoverage

Source Section

EDchResources

pmTotalRotCoverage_14

Counter per cell for the total Rise over Thermal (RoT) (including all uplink traffic and external interference) that affects the coverage. Number of samples in range 7.0..7.5dB

Data Source

NodeB

Source Field

pmTotalRotCoverage

Source Section

EDchResources

pmTotalRotCoverage_15

Counter per cell for the total Rise over Thermal (RoT) (including all uplink traffic and external interference) that affects the coverage. Number of samples in range 7.5..8.0dB

Data Source

NodeB

Source Field

pmTotalRotCoverage

Source Section

EDchResources

pmTotalRotCoverage_16

Counter per cell for the total Rise over Thermal (RoT) (including all uplink traffic and external interference) that affects the coverage. Number of samples in range 8.0..8.5dB

Data Source

NodeB

Source Field

pmTotalRotCoverage

Source Section

EDchResources

pmTotalRotCoverage_17

Counter per cell for the total Rise over Thermal (RoT) (including all uplink traffic and external interference) that affects the coverage. Number of samples in range 8.5..9.0dB

Data Source

NodeB

Source Field

pmTotalRotCoverage

Source Section

EDchResources

pmTotalRotCoverage_18

Counter per cell for the total Rise over Thermal (RoT) (including all uplink traffic and external interference) that affects the coverage. Number of samples in range 9.0..9.5dB

Data Source

NodeB

Source Field

pmTotalRotCoverage

Source Section

EDchResources

pmTotalRotCoverage_19

Counter per cell for the total Rise over Thermal (RoT) (including all uplink traffic and external interference) that affects the coverage. Number of samples in range 9.5..10.0dB

Data Source

NodeB

Source Field

pmTotalRotCoverage

Source Section

EDchResources

pmTotalRotCoverage_20

Counter per cell for the total Rise over Thermal (RoT) (including all uplink traffic and external interference) that affects the coverage. Number of samples in range 10.0..10.5dB

Data Source

NodeB

Source Field

pmTotalRotCoverage

Source Section

EDchResources

pmTotalRotCoverage_21

Counter per cell for the total Rise over Thermal (RoT) (including all uplink traffic and external interference) that affects the coverage. Number of samples in range 10.5..11.0dB

Data Source

NodeB

Source Field

pmTotalRotCoverage

Source Section

EDchResources

pmTotalRotCoverage_22

Counter per cell for the total Rise over Thermal (RoT) (including all uplink traffic and external interference) that affects the coverage. Number of samples in range 11.0..11.5dB

Data Source

NodeB

Source Field

pmTotalRotCoverage

Source Section

EDchResources

pmTotalRotCoverage_23

Counter per cell for the total Rise over Thermal (RoT) (including all uplink traffic and external interference) that affects the coverage. Number of samples in range 11.5..12.0dB

Data Source

NodeB

Source Field

pmTotalRotCoverage

Source Section

EDchResources

pmTotalRotCoverage_24

Counter per cell for the total Rise over Thermal (RoT) (including all uplink traffic and external interference) that affects the coverage. Number of samples in range 12.0..12.5dB

Data Source

NodeB

Source Field

pmTotalRotCoverage

Source Section

EDchResources

pmTotalRotCoverage_25

Counter per cell for the total Rise over Thermal (RoT) (including all uplink traffic and external interference) that affects the coverage. Number of samples in range 12.5..13.0dB

Data Source

NodeB

Source Field

pmTotalRotCoverage

Source Section

EDchResources

pmTotalRotCoverage_26

Counter per cell for the total Rise over Thermal (RoT) (including all uplink traffic and external interference) that affects the coverage. Number of samples in range 13.0..13.5dB

Data Source

NodeB

Source Field

pmTotalRotCoverage

Source Section

EDchResources

pmTotalRotCoverage_27

Counter per cell for the total Rise over Thermal (RoT) (including all uplink traffic and external interference) that affects the coverage. Number of samples in range 13.5..14.0dB

Data Source

NodeB

Source Field

pmTotalRotCoverage

Source Section

EDchResources

pmTotalRotCoverage_28

Counter per cell for the total Rise over Thermal (RoT) (including all uplink traffic and external interference) that affects the coverage. Number of samples in range 14.0..14.5dB

Data Source

NodeB

Source Field

pmTotalRotCoverage

Source Section

EDchResources

pmTotalRotCoverage_29

Counter per cell for the total Rise over Thermal (RoT) (including all uplink traffic and external interference) that affects the coverage. Number of samples in range 14.5..15.0dB

Data Source

NodeB

Source Field

pmTotalRotCoverage

Source Section

EDchResources

pmTotalRotCoverage_30

Counter per cell for the total Rise over Thermal (RoT) (including all uplink traffic and external interference) that affects the coverage. Number of samples in range 15.0..15.5dB

Data Source

NodeB

Source Field

pmTotalRotCoverage

Source Section

EDchResources

pmTotalRotCoverage_31

Counter per cell for the total Rise over Thermal (RoT) (including all uplink traffic and external interference) that affects the coverage. Number of samples in range 15.5..16.0dB

Data Source

NodeB

Source Field

pmTotalRotCoverage

Source Section

EDchResources

pmTotalRotCoverage_32

Counter per cell for the total Rise over Thermal (RoT) (including all uplink traffic and external interference) that affects the coverage. Number of samples in range 16.0..16.5dB

Data Source

NodeB

Source Field

pmTotalRotCoverage

Source Section

EDchResources

pmTotalRotCoverage_33

Counter per cell for the total Rise over Thermal (RoT) (including all uplink traffic and external interference) that affects the coverage. Number of samples in range 16.5..17.0dB

Data Source

NodeB

Source Field

pmTotalRotCoverage

Source Section

EDchResources

pmTotalRotCoverage_34

Counter per cell for the total Rise over Thermal (RoT) (including all uplink traffic and external interference) that affects the coverage. Number of samples in range 17.0..17.5dB

Data Source

NodeB

Source Field

pmTotalRotCoverage

Source Section

EDchResources

pmTotalRotCoverage_35

Counter per cell for the total Rise over Thermal (RoT) (including all uplink traffic and external interference) that affects the coverage. Number of samples in range 17.5..18.0dB

Data Source

NodeB

Source Field

pmTotalRotCoverage

Source Section

EDchResources

pmTotalRotCoverage_36

Counter per cell for the total Rise over Thermal (RoT) (including all uplink traffic and external interference) that affects the coverage. Number of samples in range 18.0..18.5dB

Data Source

NodeB

Source Field

pmTotalRotCoverage

Source Section

EDchResources

pmTotalRotCoverage_37

Counter per cell for the total Rise over Thermal (RoT) (including all uplink traffic and external interference) that affects the coverage. Number of samples in range 18.5..19.0dB

Data Source

NodeB

Source Field

pmTotalRotCoverage

Source Section

EDchResources

pmTotalRotCoverage_38

Counter per cell for the total Rise over Thermal (RoT) (including all uplink traffic and external interference) that affects the coverage. Number of samples in range 19.0..19.5dB

Data Source

NodeB

Source Field

pmTotalRotCoverage

Source Section

EDchResources

pmTotalRotCoverage_39

Counter per cell for the total Rise over Thermal (RoT) (including all uplink traffic and external interference) that affects the coverage. Number of samples in range 19.5..20.0dB

Data Source

NodeB

Source Field

pmTotalRotCoverage

Source Section

EDchResources

pmTotalRotCoverage_40

Counter per cell for the total Rise over Thermal (RoT) (including all uplink traffic and external interference) that affects the coverage. Number of samples in range 20.0..20.5dB

Data Source

NodeB

Source Field

pmTotalRotCoverage

Source Section

EDchResources

pmTotalRotCoverage_41

Counter per cell for the total Rise over Thermal (RoT) (including all uplink traffic and external interference) that affects the coverage. Number of samples in range 20.5..21dB

Data Source

NodeB

Source Field

pmTotalRotCoverage

Source Section

EDchResources

pmTotalRotCoverage_42

Counter per cell for the total Rise over Thermal (RoT) (including all uplink traffic and external interference) that affects the coverage. Number of samples in range 21..21.5dB

Data Source

NodeB

Source Field

pmTotalRotCoverage

Source Section

EDchResources

pmTotalRotCoverage_43

Counter per cell for the total Rise over Thermal (RoT) (including all uplink traffic and external interference) that affects the coverage. Number of samples in range 21.5..22.0dB

Data Source

NodeB

Source Field

pmTotalRotCoverage

Source Section

EDchResources

pmTotalRotCoverage_44

Counter per cell for the total Rise over Thermal (RoT) (including all uplink traffic and external interference) that affects the coverage. Number of samples in range 22.0..22.5dB

Data Source

NodeB

Source Field

pmTotalRotCoverage

Source Section

EDchResources

pmTotalRotCoverage_45

Counter per cell for the total Rise over Thermal (RoT) (including all uplink traffic and external interference) that affects the coverage. Number of samples in range 22.5..23.0dB

Data Source

NodeB

Source Field

pmTotalRotCoverage

Source Section

EDchResources

pmTotalRotCoverage_46

Counter per cell for the total Rise over Thermal (RoT) (including all uplink traffic and external interference) that affects the coverage. Number of samples in range 23.0..23.5dB

Data Source

NodeB

Source Field

pmTotalRotCoverage

Source Section

EDchResources

pmTotalRotCoverage_47

Counter per cell for the total Rise over Thermal (RoT) (including all uplink traffic and external interference) that affects the coverage. Number of samples in range 23.5..24.0dB

Data Source

NodeB

Source Field

pmTotalRotCoverage

Source Section

EDchResources

pmTotalRotCoverage_48

Counter per cell for the total Rise over Thermal (RoT) (including all uplink traffic and external interference) that affects the coverage. Number of samples in range 24.0..24.5dB

Data Source

NodeB

Source Field

pmTotalRotCoverage

Source Section

EDchResources

pmTotalRotCoverage_49

Counter per cell for the total Rise over Thermal (RoT) (including all uplink traffic and external interference) that affects the coverage. Number of samples in range 24.5..25.0dB

Data Source

NodeB

Source Field

pmTotalRotCoverage

Source Section

EDchResources

pmTotalRotCoverage_50

Counter per cell for the total Rise over Thermal (RoT) (including all uplink traffic and external interference) that affects the coverage. Number of samples in range >= 25.0dB

Data Source

NodeB

Source Field

pmTotalRotCoverage

Source Section

EDchResources

pmTotRateGrantedEul_00

Counter for the total granted Uu rate for all E-DCH users including soft/softer handover by the scheduler per cell. Number of samples in range 0..100kbps

Data Source

NodeB

Source Field

pmTotRateGrantedEul

Source Section

EDchResources

pmTotRateGrantedEul_01

Counter for the total granted Uu rate for all E-DCH users including soft/softer handover by the scheduler per cell. Number of samples in range 100..200kbps

Data Source

NodeB

Source Field

pmTotRateGrantedEul

Source Section

EDchResources

pmTotRateGrantedEul_02

Counter for the total granted Uu rate for all E-DCH users including soft/softer handover by the scheduler per cell. Number of samples in range 200..300kbps

Data Source

NodeB

Source Field

pmTotRateGrantedEul

Source Section

EDchResources

pmTotRateGrantedEul_03

Counter for the total granted Uu rate for all E-DCH users including soft/softer handover by the scheduler per cell. Number of samples in range 300..400kbps

Data Source

NodeB

Source Field

pmTotRateGrantedEul

Source Section

EDchResources

pmTotRateGrantedEul_04

Counter for the total granted Uu rate for all E-DCH users including soft/softer handover by the scheduler per cell. Number of samples in range 400..500kbps

Data Source

NodeB

Source Field

pmTotRateGrantedEul

Source Section

EDchResources

pmTotRateGrantedEul_05

Counter for the total granted Uu rate for all E-DCH users including soft/softer handover by the scheduler per cell. Number of samples in range 500..600kbps

Data Source

NodeB

Source Field

pmTotRateGrantedEul

Source Section

EDchResources

pmTotRateGrantedEul_06

Counter for the total granted Uu rate for all E-DCH users including soft/softer handover by the scheduler per cell. Number of samples in range 600..700kbps

Data Source

NodeB

Source Field

pmTotRateGrantedEul

Source Section

EDchResources

pmTotRateGrantedEul_07

Counter for the total granted Uu rate for all E-DCH users including soft/softer handover by the scheduler per cell. Number of samples in range 700..800kbps

Data Source

NodeB

Source Field

pmTotRateGrantedEul

Source Section

EDchResources

pmTotRateGrantedEul_08

Counter for the total granted Uu rate for all E-DCH users including soft/softer handover by the scheduler per cell. Number of samples in range 800..900kbps

Data Source

NodeB

Source Field

pmTotRateGrantedEul

Source Section

EDchResources

pmTotRateGrantedEul_09

Counter for the total granted Uu rate for all E-DCH users including soft/softer handover by the scheduler per cell. Number of samples in range 900..1000kbps

Data Source

NodeB

Source Field

pmTotRateGrantedEul

Source Section

EDchResources

pmTotRateGrantedEul_10

Counter for the total granted Uu rate for all E-DCH users including soft/softer handover by the scheduler per cell. Number of samples in range 1000..1100kbps

Data Source

NodeB

Source Field

pmTotRateGrantedEul

Source Section

EDchResources

pmTotRateGrantedEul_11

Counter for the total granted Uu rate for all E-DCH users including soft/softer handover by the scheduler per cell. Number of samples in range 1100..1200kbps

Data Source

NodeB

Source Field

pmTotRateGrantedEul

Source Section

EDchResources

pmTotRateGrantedEul_12

Counter for the total granted Uu rate for all E-DCH users including soft/softer handover by the scheduler per cell. Number of samples in range 1200..1300kbps

Data Source

NodeB

Source Field

pmTotRateGrantedEul

Source Section

EDchResources

pmTotRateGrantedEul_13

Counter for the total granted Uu rate for all E-DCH users including soft/softer handover by the scheduler per cell. Number of samples in range 1300..1400kbps

Data Source

NodeB

Source Field

pmTotRateGrantedEul

Source Section

EDchResources

pmTotRateGrantedEul_14

Counter for the total granted Uu rate for all E-DCH users including soft/softer handover by the scheduler per cell. Number of samples in range 1400..1500kbps

Data Source

NodeB

Source Field

pmTotRateGrantedEul

Source Section

EDchResources

pmTotRateGrantedEul_15

Counter for the total granted Uu rate for all E-DCH users including soft/softer handover by the scheduler per cell. Number of samples in range 1500..1600kbps

Data Source

NodeB

Source Field

pmTotRateGrantedEul

Source Section

EDchResources

pmTotRateGrantedEul_16

Counter for the total granted Uu rate for all E-DCH users including soft/softer handover by the scheduler per cell. Number of samples in range 1600..1700kbps

Data Source

NodeB

Source Field

pmTotRateGrantedEul

Source Section

EDchResources

pmTotRateGrantedEul_17

Counter for the total granted Uu rate for all E-DCH users including soft/softer handover by the scheduler per cell. Number of samples in range 1700..1800kbps

Data Source

NodeB

Source Field

pmTotRateGrantedEul

Source Section

EDchResources

pmTotRateGrantedEul_18

Counter for the total granted Uu rate for all E-DCH users including soft/softer handover by the scheduler per cell. Number of samples in range 1800..1900kbps

Data Source

NodeB

Source Field

pmTotRateGrantedEul

Source Section

EDchResources

pmTotRateGrantedEul_19

Counter for the total granted Uu rate for all E-DCH users including soft/softer handover by the scheduler per cell. Number of samples in range 1900..2000kbps

Data Source

NodeB

Source Field

pmTotRateGrantedEul

Source Section

EDchResources

pmTotRateGrantedEul_20

Counter for the total granted Uu rate for all E-DCH users including soft/softer handover by the scheduler per cell. Number of samples in range 2000..2100kbps

Data Source

NodeB

Source Field

pmTotRateGrantedEul

Source Section

EDchResources

pmTotRateGrantedEul_21

Counter for the total granted Uu rate for all E-DCH users including soft/softer handover by the scheduler per cell. Number of samples in range 2100..2200kbps

Data Source

NodeB

Source Field

pmTotRateGrantedEul

Source Section

EDchResources

pmTotRateGrantedEul_22

Counter for the total granted Uu rate for all E-DCH users including soft/softer handover by the scheduler per cell. Number of samples in range 2200..2300kbps

Data Source

NodeB

Source Field

pmTotRateGrantedEul

Source Section

EDchResources

pmTotRateGrantedEul_23

Counter for the total granted Uu rate for all E-DCH users including soft/softer handover by the scheduler per cell. Number of samples in range 2300..2400kbps

Data Source

NodeB

Source Field

pmTotRateGrantedEul

Source Section

EDchResources

pmTotRateGrantedEul_24

Counter for the total granted Uu rate for all E-DCH users including soft/softer handover by the scheduler per cell. Number of samples in range 2400..2500kbps

Data Source

NodeB

Source Field

pmTotRateGrantedEul

Source Section

EDchResources

pmTotRateGrantedEul_25

Counter for the total granted Uu rate for all E-DCH users including soft/softer handover by the scheduler per cell. Number of samples in range 2500..2600kbps

Data Source

NodeB

Source Field

pmTotRateGrantedEul

Source Section

EDchResources

pmTotRateGrantedEul_26

Counter for the total granted Uu rate for all E-DCH users including soft/softer handover by the scheduler per cell. Number of samples in range 2600..2700kbps

Data Source

NodeB

Source Field

pmTotRateGrantedEul

Source Section

EDchResources

pmTotRateGrantedEul_27

Counter for the total granted Uu rate for all E-DCH users including soft/softer handover by the scheduler per cell. Number of samples in range 2700..2800kbps

Data Source

NodeB

Source Field

pmTotRateGrantedEul

Source Section

EDchResources

pmTotRateGrantedEul_28

Counter for the total granted Uu rate for all E-DCH users including soft/softer handover by the scheduler per cell. Number of samples in range 2800..2900kbps

Data Source

NodeB

Source Field

pmTotRateGrantedEul

Source Section

EDchResources

pmTotRateGrantedEul_29

Counter for the total granted Uu rate for all E-DCH users including soft/softer handover by the scheduler per cell. Number of samples in range 2900..3000kbps

Data Source

NodeB

Source Field

pmTotRateGrantedEul

Source Section

EDchResources

pmTotRateGrantedEul_30

Counter for the total granted Uu rate for all E-DCH users including soft/softer handover by the scheduler per cell. Number of samples in range 3000..3100kbps

Data Source

NodeB

Source Field

pmTotRateGrantedEul

Source Section

EDchResources

pmTotRateGrantedEul_31

Counter for the total granted Uu rate for all E-DCH users including soft/softer handover by the scheduler per cell. Number of samples in range 3100..3200kbps

Data Source

NodeB

Source Field

pmTotRateGrantedEul

Source Section

EDchResources

pmTotRateGrantedEul_32

Counter for the total granted Uu rate for all E-DCH users including soft/softer handover by the scheduler per cell. Number of samples in range 3200..3300kbps

Data Source

NodeB

Source Field

pmTotRateGrantedEul

Source Section

EDchResources

pmTotRateGrantedEul_33

Counter for the total granted Uu rate for all E-DCH users including soft/softer handover by the scheduler per cell. Number of samples in range 3300..3400kbps

Data Source

NodeB

Source Field

pmTotRateGrantedEul

Source Section

EDchResources

pmTotRateGrantedEul_34

Counter for the total granted Uu rate for all E-DCH users including soft/softer handover by the scheduler per cell. Number of samples in range 3400..3500kbps

Data Source

NodeB

Source Field

pmTotRateGrantedEul

Source Section

EDchResources

pmTotRateGrantedEul_35

Counter for the total granted Uu rate for all E-DCH users including soft/softer handover by the scheduler per cell. Number of samples in range 3500..3600kbps

Data Source

NodeB

Source Field

pmTotRateGrantedEul

Source Section

EDchResources

pmTotRateGrantedEul_36

Counter for the total granted Uu rate for all E-DCH users including soft/softer handover by the scheduler per cell. Number of samples in range 3600..3700kbps

Data Source

NodeB

Source Field

pmTotRateGrantedEul

Source Section

EDchResources

pmTotRateGrantedEul_37

Counter for the total granted Uu rate for all E-DCH users including soft/softer handover by the scheduler per cell. Number of samples in range 3700..3800kbps

Data Source

NodeB

Source Field

pmTotRateGrantedEul

Source Section

EDchResources

pmTotRateGrantedEul_38

Counter for the total granted Uu rate for all E-DCH users including soft/softer handover by the scheduler per cell. Number of samples in range 3800..3900kbps

Data Source

NodeB

Source Field

pmTotRateGrantedEul

Source Section

EDchResources

pmTotRateGrantedEul_39

Counter for the total granted Uu rate for all E-DCH users including soft/softer handover by the scheduler per cell. Number of samples in range 3900..4000kbps

Data Source

NodeB

Source Field

pmTotRateGrantedEul

Source Section

EDchResources

pmTotRateGrantedEul_40

Counter for the total granted Uu rate for all E-DCH users including soft/softer handover by the scheduler per cell. Number of samples in range 4000..4100kbps

Data Source

NodeB

Source Field

pmTotRateGrantedEul

Source Section

EDchResources

pmTotRateGrantedEul_41

Counter for the total granted Uu rate for all E-DCH users including soft/softer handover by the scheduler per cell. Number of samples in range 4100..4200kbps

Data Source

NodeB

Source Field

pmTotRateGrantedEul

Source Section

EDchResources

pmTotRateGrantedEul_42

Counter for the total granted Uu rate for all E-DCH users including soft/softer handover by the scheduler per cell. Number of samples in range 4200..4300kbps

Data Source

NodeB

Source Field

pmTotRateGrantedEul

Source Section

EDchResources

pmTotRateGrantedEul_43

Counter for the total granted Uu rate for all E-DCH users including soft/softer handover by the scheduler per cell. Number of samples in range 4300..4400kbps

Data Source

NodeB

Source Field

pmTotRateGrantedEul

Source Section

EDchResources

pmTotRateGrantedEul_44

Counter for the total granted Uu rate for all E-DCH users including soft/softer handover by the scheduler per cell. Number of samples in range 4400..4500kbps

Data Source

NodeB

Source Field

pmTotRateGrantedEul

Source Section

EDchResources

pmTotRateGrantedEul_45

Counter for the total granted Uu rate for all E-DCH users including soft/softer handover by the scheduler per cell. Number of samples in range 4500..4600kbps

Data Source

NodeB

Source Field

pmTotRateGrantedEul

Source Section

EDchResources

pmTotRateGrantedEul_46

Counter for the total granted Uu rate for all E-DCH users including soft/softer handover by the scheduler per cell. Number of samples in range 4600..4700kbps

Data Source

NodeB

Source Field

pmTotRateGrantedEul

Source Section

EDchResources

pmTotRateGrantedEul_47

Counter for the total granted Uu rate for all E-DCH users including soft/softer handover by the scheduler per cell. Number of samples in range 4700..4800kbps

Data Source

NodeB

Source Field

pmTotRateGrantedEul

Source Section

EDchResources

pmTotRateGrantedEul_48

Counter for the total granted Uu rate for all E-DCH users including soft/softer handover by the scheduler per cell. Number of samples in range 4800..4900kbps

Data Source

NodeB

Source Field

pmTotRateGrantedEul

Source Section

EDchResources

pmTotRateGrantedEul_49

Counter for the total granted Uu rate for all E-DCH users including soft/softer handover by the scheduler per cell. Number of samples in range 4900..5000kbps

Data Source

NodeB

Source Field

pmTotRateGrantedEul

Source Section

EDchResources

pmTotRateGrantedEul_50

Counter for the total granted Uu rate for all E-DCH users including soft/softer handover by the scheduler per cell. Number of samples in range 5000..5100kbps

Data Source

NodeB

Source Field

pmTotRateGrantedEul

Source Section

EDchResources

pmTotRateGrantedEul_51

Counter for the total granted Uu rate for all E-DCH users including soft/softer handover by the scheduler per cell. Number of samples in range 5100..5200kbps

Data Source

NodeB

Source Field

pmTotRateGrantedEul

Source Section

EDchResources

pmTotRateGrantedEul_52

Counter for the total granted Uu rate for all E-DCH users including soft/softer handover by the scheduler per cell. Number of samples in range 5200..5300kbps

Data Source

NodeB

Source Field

pmTotRateGrantedEul

Source Section

EDchResources

pmTotRateGrantedEul_53

Counter for the total granted Uu rate for all E-DCH users including soft/softer handover by the scheduler per cell. Number of samples in range 5300..5400kbps

Data Source

NodeB

Source Field

pmTotRateGrantedEul

Source Section

EDchResources

pmTotRateGrantedEul_54

Counter for the total granted Uu rate for all E-DCH users including soft/softer handover by the scheduler per cell. Number of samples in range 5400..5500kbps

Data Source

NodeB

Source Field

pmTotRateGrantedEul

Source Section

EDchResources

pmTotRateGrantedEul_55

Counter for the total granted Uu rate for all E-DCH users including soft/softer handover by the scheduler per cell. Number of samples in range 5500..5600kbps

Data Source

NodeB

Source Field

pmTotRateGrantedEul

Source Section

EDchResources

pmTotRateGrantedEul_56

Counter for the total granted Uu rate for all E-DCH users including soft/softer handover by the scheduler per cell. Number of samples in range 5600..5700kbps

Data Source

NodeB

Source Field

pmTotRateGrantedEul

Source Section

EDchResources

pmTotRateGrantedEul_57

Counter for the total granted Uu rate for all E-DCH users including soft/softer handover by the scheduler per cell. Number of samples in range 5700..5800kbps

Data Source

NodeB

Source Field

pmTotRateGrantedEul

Source Section

EDchResources

pmTotRateGrantedEul_58

Counter for the total granted Uu rate for all E-DCH users including soft/softer handover by the scheduler per cell. Number of samples in range 5800..5900kbps

Data Source

NodeB

Source Field

pmTotRateGrantedEul

Source Section

EDchResources

pmTotRateGrantedEul_59

Counter for the total granted Uu rate for all E-DCH users including soft/softer handover by the scheduler per cell. Number of samples in range 5900..6000kbps

Data Source

NodeB

Source Field

pmTotRateGrantedEul

Source Section

EDchResources

pmTotRateGrantedEul_60

Counter for the total granted Uu rate for all E-DCH users including soft/softer handover by the scheduler per cell. Number of samples in range >= 6000kbps

Data Source

NodeB

Source Field

pmTotRateGrantedEul

Source Section

EDchResources

pmWaitingTimeEul_00

Counter for the waiting time in ms for an E-DCH user from when a rate increase request is received when the scheduled grant = 0 to when a scheduled grant >0 is sent to the UE with an absolute grant. Number of samples in range 0..10ms

Data Source

NodeB

Source Field

pmWaitingTimeEul

Source Section

EDchResources

pmWaitingTimeEul_01

Counter for the waiting time in ms for an E-DCH user from when a rate increase request is received when the scheduled grant = 0 to when a scheduled grant >0 is sent to the UE with an absolute grant. Number of samples in range 10..20ms

Data Source

NodeB

Source Field

pmWaitingTimeEul

Source Section

EDchResources

pmWaitingTimeEul_02

Counter for the waiting time in ms for an E-DCH user from when a rate increase request is received when the scheduled grant = 0 to when a scheduled grant >0 is sent to the UE with an absolute grant. Number of samples in range 20..30ms

Data Source

NodeB

Source Field

pmWaitingTimeEul

Source Section

EDchResources

pmWaitingTimeEul_03

Counter for the waiting time in ms for an E-DCH user from when a rate increase request is received when the scheduled grant = 0 to when a scheduled grant >0 is sent to the UE with an absolute grant. Number of samples in range 30..40ms

Data Source

NodeB

Source Field

pmWaitingTimeEul

Source Section

EDchResources

pmWaitingTimeEul_04

Counter for the waiting time in ms for an E-DCH user from when a rate increase request is received when the scheduled grant = 0 to when a scheduled grant >0 is sent to the UE with an absolute grant. Number of samples in range 40..50ms

Data Source

NodeB

Source Field

pmWaitingTimeEul

Source Section

EDchResources

pmWaitingTimeEul_05

Counter for the waiting time in ms for an E-DCH user from when a rate increase request is received when the scheduled grant = 0 to when a scheduled grant >0 is sent to the UE with an absolute grant. Number of samples in range 50..60ms

Data Source

NodeB

Source Field

pmWaitingTimeEul

Source Section

EDchResources

pmWaitingTimeEul_06

Counter for the waiting time in ms for an E-DCH user from when a rate increase request is received when the scheduled grant = 0 to when a scheduled grant >0 is sent to the UE with an absolute grant. Number of samples in range 60..70ms

Data Source

NodeB

Source Field

pmWaitingTimeEul

Source Section

EDchResources

pmWaitingTimeEul_07

Counter for the waiting time in ms for an E-DCH user from when a rate increase request is received when the scheduled grant = 0 to when a scheduled grant >0 is sent to the UE with an absolute grant. Number of samples in range 70..80ms

Data Source

NodeB

Source Field

pmWaitingTimeEul

Source Section

EDchResources

pmWaitingTimeEul_08

Counter for the waiting time in ms for an E-DCH user from when a rate increase request is received when the scheduled grant = 0 to when a scheduled grant >0 is sent to the UE with an absolute grant. Number of samples in range 80..90ms

Data Source

NodeB

Source Field

pmWaitingTimeEul

Source Section

EDchResources

pmWaitingTimeEul_09

Counter for the waiting time in ms for an E-DCH user from when a rate increase request is received when the scheduled grant = 0 to when a scheduled grant >0 is sent to the UE with an absolute grant. Number of samples in range 90..100ms

Data Source

NodeB

Source Field

pmWaitingTimeEul

Source Section

EDchResources

pmWaitingTimeEul_10

Counter for the waiting time in ms for an E-DCH user from when a rate increase request is received when the scheduled grant = 0 to when a scheduled grant >0 is sent to the UE with an absolute grant. Number of samples in range 100..200ms

Data Source

NodeB

Source Field

pmWaitingTimeEul

Source Section

EDchResources

pmWaitingTimeEul_11

Counter for the waiting time in ms for an E-DCH user from when a rate increase request is received when the scheduled grant = 0 to when a scheduled grant >0 is sent to the UE with an absolute grant. Number of samples in range 200..300ms

Data Source

NodeB

Source Field

pmWaitingTimeEul

Source Section

EDchResources

pmWaitingTimeEul_12

Counter for the waiting time in ms for an E-DCH user from when a rate increase request is received when the scheduled grant = 0 to when a scheduled grant >0 is sent to the UE with an absolute grant. Number of samples in range 300..400ms

Data Source

NodeB

Source Field

pmWaitingTimeEul

Source Section

EDchResources

pmWaitingTimeEul_13

Counter for the waiting time in ms for an E-DCH user from when a rate increase request is received when the scheduled grant = 0 to when a scheduled grant >0 is sent to the UE with an absolute grant. Number of samples in range 400..500ms

Data Source

NodeB

Source Field

pmWaitingTimeEul

Source Section

EDchResources

pmWaitingTimeEul_14

Counter for the waiting time in ms for an E-DCH user from when a rate increase request is received when the scheduled grant = 0 to when a scheduled grant >0 is sent to the UE with an absolute grant. Number of samples in range 500..600ms

Data Source

NodeB

Source Field

pmWaitingTimeEul

Source Section

EDchResources

pmWaitingTimeEul_15

Counter for the waiting time in ms for an E-DCH user from when a rate increase request is received when the scheduled grant = 0 to when a scheduled grant >0 is sent to the UE with an absolute grant. Number of samples in range 600..700ms

Data Source

NodeB

Source Field

pmWaitingTimeEul

Source Section

EDchResources

pmWaitingTimeEul_16

Counter for the waiting time in ms for an E-DCH user from when a rate increase request is received when the scheduled grant = 0 to when a scheduled grant >0 is sent to the UE with an absolute grant. Number of samples in range 700..800ms

Data Source

NodeB

Source Field

pmWaitingTimeEul

Source Section

EDchResources

pmWaitingTimeEul_17

Counter for the waiting time in ms for an E-DCH user from when a rate increase request is received when the scheduled grant = 0 to when a scheduled grant >0 is sent to the UE with an absolute grant. Number of samples in range 800..900ms

Data Source

NodeB

Source Field

pmWaitingTimeEul

Source Section

EDchResources

pmWaitingTimeEul_18

Counter for the waiting time in ms for an E-DCH user from when a rate increase request is received when the scheduled grant = 0 to when a scheduled grant >0 is sent to the UE with an absolute grant. Number of samples in range 900..1000ms

Data Source

NodeB

Source Field

pmWaitingTimeEul

Source Section

EDchResources

pmWaitingTimeEul_19

Counter for the waiting time in ms for an E-DCH user from when a rate increase request is received when the scheduled grant = 0 to when a scheduled grant >0 is sent to the UE with an absolute grant. Number of samples in range 1000..2000ms

Data Source

NodeB

Source Field

pmWaitingTimeEul

Source Section

EDchResources

pmWaitingTimeEul_20

Counter for the waiting time in ms for an E-DCH user from when a rate increase request is received when the scheduled grant = 0 to when a scheduled grant >0 is sent to the UE with an absolute grant. Number of samples in range 2000..3000ms

Data Source

NodeB

Source Field

pmWaitingTimeEul

Source Section

EDchResources

pmWaitingTimeEul_21

Counter for the waiting time in ms for an E-DCH user from when a rate increase request is received when the scheduled grant = 0 to when a scheduled grant >0 is sent to the UE with an absolute grant. Number of samples in range 3000..4000ms

Data Source

NodeB

Source Field

pmWaitingTimeEul

Source Section

EDchResources

pmWaitingTimeEul_22

Counter for the waiting time in ms for an E-DCH user from when a rate increase request is received when the scheduled grant = 0 to when a scheduled grant >0 is sent to the UE with an absolute grant. Number of samples in range 4000..5000ms

Data Source

NodeB

Source Field

pmWaitingTimeEul

Source Section

EDchResources

pmWaitingTimeEul_23

Counter for the waiting time in ms for an E-DCH user from when a rate increase request is received when the scheduled grant = 0 to when a scheduled grant >0 is sent to the UE with an absolute grant. Number of samples in range 5000..6000ms

Data Source

NodeB

Source Field

pmWaitingTimeEul

Source Section

EDchResources

pmWaitingTimeEul_24

Counter for the waiting time in ms for an E-DCH user from when a rate increase request is received when the scheduled grant = 0 to when a scheduled grant >0 is sent to the UE with an absolute grant. Number of samples in range 6000..7000ms

Data Source

NodeB

Source Field

pmWaitingTimeEul

Source Section

EDchResources

pmWaitingTimeEul_25

Counter for the waiting time in ms for an E-DCH user from when a rate increase request is received when the scheduled grant = 0 to when a scheduled grant >0 is sent to the UE with an absolute grant. Number of samples in range 7000..8000ms

Data Source

NodeB

Source Field

pmWaitingTimeEul

Source Section

EDchResources

pmWaitingTimeEul_26

Counter for the waiting time in ms for an E-DCH user from when a rate increase request is received when the scheduled grant = 0 to when a scheduled grant >0 is sent to the UE with an absolute grant. Number of samples in range 8000..9000ms

Data Source

NodeB

Source Field

pmWaitingTimeEul

Source Section

EDchResources

pmWaitingTimeEul_27

Counter for the waiting time in ms for an E-DCH user from when a rate increase request is received when the scheduled grant = 0 to when a scheduled grant >0 is sent to the UE with an absolute grant. Number of samples in range 9000..10000ms

Data Source

NodeB

Source Field

pmWaitingTimeEul

Source Section

EDchResources

pmWaitingTimeEul_28

Counter for the waiting time in ms for an E-DCH user from when a rate increase request is received when the scheduled grant = 0 to when a scheduled grant >0 is sent to the UE with an absolute grant. Number of samples in range >= 10000ms

Data Source

NodeB

Source Field

pmWaitingTimeEul

Source Section

EDchResources

Equipment_NodeB Primitive Calculations

The following is a list of primitive calculations for the Equipment_NodeB entity.

GRAPHmultiLineSeparator

Special Control Field for Multi-Line Graphs

Calculation

```
""
```

NUMDAYS

of days in Report

Calculation

```
DAYSINREPORT()
```

NUMHOURS

of hours in Summation Data

Calculation

Equipment_RNC Primitive Calculations

The following is a list of primitive calculations for the Equipment_RNC entity.

GRAPHmultiLineSeparator

Special Control Field for Multi-Line Graphs

Calculation

```
""
```

MainProcessorLoadRNC_Equipment

Main CPU load % (based on Operating System Enea function) filtered on Subrack=MS.

Calculation

```
AGGR(Subrack_RNC[LocalKey == "MS"], MainProcessorLoadRNC_Subrack)
```

NUMDAYS

of days in Report

Calculation

```
DAYSINREPORT()
```

NUMHOURS

of hours in Summation Data

Calculation

EthernetLink_NodeB Primitive Calculations

The following is a list of primitive calculations for the EthernetLink_NodeB entity.

GRAPHmultiLineSeparator

Special Control Field for Multi-Line Graphs

Calculation

```
""
```

NUMDAYS

of days in Report

Calculation

```
DAYSINREPORT()
```

NUMHOURS

of hours in Summation Data

Calculation

Received_Packets_Ethernet_Link_NodeB

Received Packets in IP Ethernet Link Layer

Calculation

```
vsum( pmNoOfIfInNUcastPkts,pmNoOfIfInUcastPkts )
```

Sent_Packets_IP_Ethernet_Link_NodeB

Sent Packets in IP Ethernet Link Layer

Calculation

```
vsum(pmNoOfIfOutNUcastPkts,pmNoOfIfOutUcastPkts)
```

EthernetLink_NodeB Peg Counts

The following is a list of peg counts for the EthernetLink_NodeB entity.

NodeB_RELEASE

Release

Data Source

NodeB_RNC_RXI

Source Section

EthernetLink_NodeB

PERLENSEC

Period Length

Data Source

NodeB_RNC_RXI

Source Field

perlensec

Source Section

EthernetLink_NodeB_WMGeneral

PERLENSEC_K

Period length in seconds aggregation summation in time domain and aggregation maximum between Network Elements.

Data Source

NodeB_RNC_RXI

Source Field

perlensec

Source Section

EthernetLink_NodeB_WMGeneral

pmNoOfIfInDiscards

Number of input packets discarded due to resource limitations.

Data Source

NodeB_RNC_RXI

Source Field

pmNoOfIfInDiscards

Source Section

EthernetLink_NodeB

pmNoOfIfInErrors

Number of input packets discarded due to any error.

Data Source

NodeB_RNC_RXI

Source Field

pmNoOfIfInErrors

Source Section

EthernetLink_NodeB

pmNoOfIfInNUcastPkts

Number of input broadcast/multicast packets delivered to a higher layer.

Data Source

NodeB_RNC_RXI

Source Field

pmNoOfIfInNUcastPkts

Source Section

EthernetLink_NodeB

pmNoOfIfInUcastPkts

Number of input unicast packets delivered to a higher layer.

Data Source

NodeB_RNC_RXI

Source Field

pmNoOfIfInUcastPkts

Source Section

EthernetLink_NodeB

pmNoOfIfOutNUcastPkts

Number of output broadcast/multicast packets delivered to higher layer.

Data Source

NodeB_RNC_RXI

Source Field

pmNoOfIfOutNUcastPkts

Source Section

EthernetLink_NodeB

pmNoOfIfOutUcastPkts

Number of out unicast packets delivered to a higher layer.

Data Source

NodeB_RNC_RXI

Source Field

pmNoOfIfOutUcastPkts

Source Section

EthernetLink_NodeB

EthernetLink_RNC Primitive Calculations

The following is a list of primitive calculations for the EthernetLink_RNC entity.

GRAPHmultiLineSeparator

Special Control Field for Multi-Line Graphs

Calculation

```
""
```

NUMDAYS

of days in Report

Calculation

```
DAYSINREPORT()
```

NUMHOURS

of hours in Summation Data

Calculation

Received_Packets_Ethernet_Link_RNC

Sent Packets in IP Ethernet Link Layer

Calculation

```
vsum(pmNoOfIfOutNUcastPkts,pmNoOfIfOutUcastPkts)
```

EthernetLink_RNC Peg Counts

The following is a list of peg counts for the EthernetLink_RNC entity.

PERLENSEC

Period Length

Data Source

NodeB_RNC_RXI

Source Field

perlensec

Updated: 2009-07-22

Source Section

EthernetLink_RNC_WMGeneral

PERLENSEC_K

Period length in seconds aggregation summation in time domain and aggregation maximum between Network Elements.

Data Source

NodeB_RNC_RXI

Source Field

perlensec

Source Section

EthernetLink_RNC_WMGeneral

pmNoOfIfInDiscards

Number of input packets discarded due to resource limitations.

Data Source

NodeB_RNC_RXI

Source Field

pmNoOfIfInDiscards

Source Section

EthernetLink_RNC

pmNoOfIfInErrors

Number of input packets discarded due to any error.

Data Source

NodeB_RNC_RXI

Source Field

pmNoOfIfInErrors

Source Section

EthernetLink_RNC

pmNoOfIfInNUcastPkts

Number of input broadcast/multicast packets delivered to a higher layer.

Data Source

NodeB_RNC_RXI

Source Field

pmNoOfIfInNUcastPkts

Source Section

EthernetLink_RNC

pmNoOfIfInUcastPkts

Number of input unicast packets delivered to a higher layer.

Data Source

NodeB_RNC_RXI

Source Field

pmNoOfIfInUcastPkts

Source Section

EthernetLink_RNC

pmNoOfIfOutNUcastPkts

Number of output broadcast/multicast packets delivered to higher layer.

Data Source

NodeB_RNC_RXI

Source Field

pmNoOfIfOutNUcastPkts

Source Section

EthernetLink_RNC

pmNoOfIfOutUcastPkts

Number of out unicast packets delivered to a higher layer.

Data Source

NodeB_RNC_RXI

Source Field

pmNoOfIfOutUcastPkts

Source Section

EthernetLink_RNC

RNC_RELEASE

Release

Data Source

NodeB_RNC_RXI

Source Section

EthernetLink_RNC

Etm1_NodeB Primitive Calculations

The following is a list of primitive calculations for the Etm1_NodeB entity.

GRAPHmultiLineSeparator

Special Control Field for Multi-Line Graphs

Calculation

```
""
```

NUMDAYS

of days in Report

Calculation

```
DAYSINREPORT()
```

NUMHOURS

of hours in Summation Data

Calculation

Etm1_RNC Primitive Calculations

The following is a list of primitive calculations for the Etm1_RNC entity.

GRAPHmultiLineSeparator

Special Control Field for Multi-Line Graphs

Calculation

```
""
```

NUMDAYS

of days in Report

Calculation

```
DAYSINREPORT()
```

NUMHOURS

of hours in Summation Data

Calculation

Etm4_NodeB Primitive Calculations

The following is a list of primitive calculations for the Etm4_NodeB entity.

GRAPHmultiLineSeparator

Special Control Field for Multi-Line Graphs

Calculation

```
""
```

NUMDAYS

of days in Report

Calculation

```
DAYSINREPORT()
```

NUMHOURS

of hours in Summation Data

Calculation

Etm4_RNC Primitive Calculations

The following is a list of primitive calculations for the Etm4_RNC entity.

GRAPHmultiLineSeparator

Special Control Field for Multi-Line Graphs

Calculation

```
""
```

NUMDAYS

of days in Report

Calculation

```
DAYSINREPORT()
```

NUMHOURS

of hours in Summation Data

Calculation

FastEthernet_NodeB Primitive Calculations

The following is a list of primitive calculations for the FastEthernet_NodeB entity.

GRAPHmultiLineSeparator

Special Control Field for Multi-Line Graphs

Calculation

```
""
```

NUMDAYS

of days in Report

Calculation

```
DAYSINREPORT()
```

NUMHOURS

of hours in Summation Data

pmIfInOctets

The total number of octets received on the interface, including framing characters.

Calculation

```
pmIfInOctetsHi + pmIfInOctetsLo
```

pmIfOutOctets

The total number of octets transmitted out on the interface, including framing characters.

Calculation

```
pmIfOutOctetsHi + pmIfOutOctetsLo
```

FastEthernet_NodeB Peg Counts

The following is a list of peg counts for the FastEthernet_NodeB entity.

PERLENSEC

Period length in seconds

Data Source

NodeB_RXI

Source Field

gp

Source Section

FastEthernet

PERLENSEC_K

Period length in seconds aggregation summation in time domain and aggregation maximum between Network Elements.

Data Source

NodeB_RXI

Source Field

gp

Source Section

FastEthernet

pmIfInBroadcastPkts

The number of broadcast packets, delivered by this sublayer to a higher (sub-)layer, that were addressed to a broadcast address at this sublayer. For additional info, refer to RFC 2863.

Data Source

NodeB_RXI

Source Field

pmIfInBroadcastPkts

Source Section

FastEthernet

pmIfInDiscards

The number of inbound packets that were chosen to be discarded even though no errors had been detected that prevented them from being delivered to a higher-layer protocol. One possible reason for discarding such a packet could be to free up buffer space. For additional info, refer to RFC 2863.

Data Source

NodeB_RXI

Source Field

pmIfInDiscards

Source Section

FastEthernet

pmIfInErrors

Number of input packets discarded due to any error. For additional info, refer to RFC 2863.

Data Source

NodeB_RXI

Source Field

pmIfInErrors

Source Section

FastEthernet

pmIfInMulticastPkts

The number of multicast packets, delivered by this sublayer to a higher (sub-)layer, that were addressed to a multicast address at this sublayer. For a MAC layer protocol, this includes both Group and Functional addresses. For additional info, refer to RFC 2863.

Data Source

NodeB_RXI

Source Field

pmIfInMulticastPkts

Source Section

FastEthernet

pmIfInOctetsHi

The total number of octets received on the interface, including framing characters. Note: The high-capacity counter for octets received on an interface has been split into two parts. This counter represents the higher part of the 62 least significant bits of the high capacity counter for octets received on the interface. The two most significant bits of this 64-bit counter are discarded. This 64-bit counter is presented as 2*31 bits: pmIfInOctetsHi (bit 62-31) and pmIfInOctets (bit 30-0). For additional info, refer to RFC 2863.

Data Source

NodeB_RXI

Source Field

pmIfInOctetsHi * 2147483648

Source Section

FastEthernet

pmIfInOctetsLo

The total number of octets received on the interface, including framing characters. Note: The high-capacity counter for octets received on an interface has been split into two parts. This

counter represents the lower part of the 62 least-significant bits of the high-capacity counter for octets received on the interface. The two most significant bits of this 64-bit counter are discarded. This 64-bit counter is presented as 2*31 bits: pmIfInOctetsHi (bit 62-31) and pmIfInOctetsLo (bit 30-0). For additional info, refer to RFC 2863.

Data Source

NodeB_RXI

Source Field

pmIfInOctetsLo

Source Section

FastEthernet

pmIfInUcastPkts

The number of unicast packets, delivered by this sublayer to a higher (sub-)layer, that were not addressed to a multicast or broadcast address at this sublayer. For additional info, refer to RFC 2863.

Data Source

NodeB_RXI

Source Field

pmIfInUcastPkts

Source Section

FastEthernet

pmIfInUnknownProtos

The number of packets received that had a protocol not supported or unknown. For additional info, refer to RFC 2863.

Data Source

NodeB_RXI

Source Field

pmIfInUnknownProtos

Source Section

FastEthernet

pmIfOutBroadcastPkts

The total number of broadcast packets that higher-level protocols requested to be transmitted, and which were addressed to a broadcast address at this sublayer, including those that were discarded or not sent. For additional info, refer to RFC 2863.

Data Source

NodeB_RXI

Source Field

pmIfOutBroadcastPkts

Source Section

FastEthernet

pmIfOutDiscards

The number of packets requested to be transmitted, but which were discarded due to lack of resources (for example, buffer space). For additional info, refer to RFC 2863.

Data Source

NodeB_RXI

Source Field

pmIfOutDiscards

Source Section

FastEthernet

pmIfOutErrors

The number of packets requested to be transmitted, but which were discarded due to errors found in the packets. For additional info, refer to RFC 2863.

Data Source

NodeB_RXI

Source Field

pmIfOutErrors

Source Section

FastEthernet

pmIfOutMulticastPkts

The total number of multicast packets that higher-level protocols requested to be transmitted, and which were addressed to a multicast address at this sublayer, including those that were discarded or not sent. For additional info, refer to RFC 2863.

Data Source

NodeB_RXI

Source Field

pmIfOutMulticastPkts

Source Section

FastEthernet

pmIfOutOctetsHi

The total number of octets transmitted out on the interface, including framing characters. Note: The high-capacity counter for octets transmitted out on an interface has been split into two parts. This counter represents the higher part of the 62 least-significant bits of the high-capacity counter for octets transmitted out on the interface. The two most-significant bits of this 64-bit counter are discarded. This 64-bit counter is presented as 2*31 bits: pmIfOutOctetsHi (bit 62-31) and pmIfOutOctetsLo (bit 30-0). For additional info, refer to RFC 2863.

Data Source

NodeB_RXI

Source Field

pmIfOutOctetsHi * 2147483648

Source Section

FastEthernet

pmIfOutOctetsLo

The total number of octets transmitted out on the interface, including framing characters. Note: The high-capacity counter for octets transmitted out on an interface has been split into two parts. This counter represents the lower part of the 62 least-significant bits of the high-capacity counter for octets transmitted out on the interface. The two most-significant bits of this 64-bit counter are discarded. This 64-bit counter is presented as 2*31 bits: pmIfOutOctetsHi (bit 62-31) and pmIfOutOctetsLo (bit 30-0). For additional info, refer to RFC 2863.

Data Source

NodeB_RXI

Source Field

pmIfOutOctetsLo

Source Section

FastEthernet

pmIfOutUcastPkts

The total number of unicast packets that higher-level protocols requested to be transmitted, and which were not addressed to a multicast or broadcast address at this sublayer, including those that were discarded or not sent. For additional info, refer to RFC 2863.

Data Source

NodeB_RXI

Source Field

pmIfOutUcastPkts

Source Section

FastEthernet

FastEthernet_RNC Primitive Calculations

The following is a list of primitive calculations for the FastEthernet_RNC entity.

GRAPHmultiLineSeparator

Special Control Field for Multi-Line Graphs

Calculation

```
""
```

NUMDAYS

of days in Report

Calculation

```
DAYSINREPORT()
```

Updated: 2009-07-22

NUMHOURS

of hours in Summation Data

pmIfInOctets

The total number of octets received on the interface, including framing characters.

Calculation

```
pmIfInOctetsHi + pmIfInOctetsLo
```

pmIfOutOctets

The total number of octets transmitted out on the interface, including framing characters.

Calculation

```
pmIfOutOctetsHi + pmIfOutOctetsLo
```

FastEthernet_RNC Peg Counts

The following is a list of peg counts for the FastEthernet_RNC entity.

PERLENSEC

Period length in seconds

Data Source

RNC_RXI

Source Field

gp

Source Section

FastEthernet

PERLENSEC_K

Period length in seconds aggregation summation in time domain and aggregation maximum between Network Elements.

Data Source

RNC_RXI

Source Field

gp

Source Section

FastEthernet

pmIfInBroadcastPkts

The number of broadcast packets, delivered by this sublayer to a higher (sub-)layer, that were addressed to a broadcast address at this sublayer. For additional info, refer to RFC 2863.

Data Source

RNC_RXI

Source Field

pmIfInBroadcastPkts

Source Section

FastEthernet

pmIfInDiscards

The number of inbound packets that were chosen to be discarded even though no errors had been detected that prevented them from being delivered to a higher-layer protocol. One possible reason for discarding such a packet could be to free up buffer space. For additional info, refer to RFC 2863.

Data Source

RNC_RXI

Source Field

pmIfInDiscards

Source Section

FastEthernet

pmIfInErrors

Number of input packets discarded due to any error. For additional info, refer to RFC 2863.

Data Source

RNC_RXI

Source Field

pmIfInErrors

Source Section

FastEthernet

pmIfInMulticastPkts

The number of multicast packets, delivered by this sublayer to a higher (sub-)layer, that were addressed to a multicast address at this sublayer. For a MAC layer protocol, this includes both Group and Functional addresses. For additional info, refer to RFC 2863.

Data Source

RNC_RXI

Source Field

pmIfInMulticastPkts

Source Section

FastEthernet

pmIfInOctetsHi

The total number of octets received on the interface, including framing characters. Note: The high-capacity counter for octets received on an interface has been split into two parts. This counter represents the higher part of the 62 least significant bits of the high capacity counter for octets received on the interface. The two most significant bits of this 64-bit counter are discarded. This 64-bit counter is presented as 2*31 bits: pmIfInOctetsHi (bit 62-31) and pmIfInOctets (bit 30-0). For additional info, refer to RFC 2863.

Data Source

RNC_RXI

Source Field

pmIfInOctetsHi * 2147483648

Source Section

FastEthernet

pmIfInOctetsLo

The total number of octets received on the interface, including framing characters. Note: The high-capacity counter for octets received on an interface has been split into two parts. This counter represents the lower part of the 62 least-significant bits of the high-capacity counter for octets received on the interface. The two most significant bits of this 64-bit counter are

discarded. This 64-bit counter is presented as 2*31 bits: pmIfInOctetsHi (bit 62-31) and pmIfInOctetsLo (bit 30-0). For additional info, refer to RFC 2863.

Data Source

RNC_RXI

Source Field

pmIfInOctetsLo

Source Section

FastEthernet

pmIfInUcastPkts

The number of unicast packets, delivered by this sublayer to a higher (sub-)layer, that were not addressed to a multicast or broadcast address at this sublayer. For additional info, refer to RFC 2863.

Data Source

RNC_RXI

Source Field

pmIfInUcastPkts

Source Section

FastEthernet

pmIfInUnknownProtos

The number of packets received that had a protocol not supported or unknown. For additional info, refer to RFC 2863.

Data Source

RNC_RXI

Source Field

pmIfInUnknownProtos

Source Section

FastEthernet

pmIfOutBroadcastPkts

The total number of broadcast packets that higher-level protocols requested to be transmitted, and which were addressed to a broadcast address at this sublayer, including those that were discarded or not sent. For additional info, refer to RFC 2863.

Data Source

RNC_RXI

Source Field

pmIfOutBroadcastPkts

Source Section

FastEthernet

pmIfOutDiscards

The number of packets requested to be transmitted, but which were discarded due to lack of resources (for example, buffer space). For additional info, refer to RFC 2863.

Data Source

RNC_RXI

Source Field

pmIfOutDiscards

Source Section

FastEthernet

pmIfOutErrors

The number of packets requested to be transmitted, but which were discarded due to errors found in the packets. For additional info, refer to RFC 2863.

Data Source

RNC_RXI

Source Field

pmIfOutErrors

Source Section

FastEthernet

pmIfOutMulticastPkts

The total number of multicast packets that higher-level protocols requested to be transmitted, and which were addressed to a multicast address at this sublayer, including those that were discarded or not sent. For additional info, refer to RFC 2863.

Data Source

RNC_RXI

Source Field

pmIfOutMulticastPkts

Source Section

FastEthernet

pmIfOutOctetsHi

The total number of octets transmitted out on the interface, including framing characters. Note: The high-capacity counter for octets transmitted out on an interface has been split into two parts. This counter represents the higher part of the 62 least-significant bits of the high-capacity counter for octets transmitted out on the interface. The two most-significant bits of this 64-bit counter are discarded. This 64-bit counter is presented as 2*31 bits: pmIfOutOctetsHi (bit 62-31) and pmIfOutOctetsLo (bit 30-0). For additional info, refer to RFC 2863.

Data Source

RNC_RXI

Source Field

pmIfOutOctetsHi * 2147483648

Source Section

FastEthernet

pmIfOutOctetsLo

The total number of octets transmitted out on the interface, including framing characters. Note: The high-capacity counter for octets transmitted out on an interface has been split into two parts. This counter represents the lower part of the 62 least-significant bits of the high-capacity counter for octets transmitted out on the interface. The two most-significant bits of this 64-bit counter are discarded. This 64-bit counter is presented as 2*31 bits: pmIfOutOctetsHi (bit 62-31) and pmIfOutOctetsLo (bit 30-0). For additional info, refer to RFC 2863.

Data Source

RNC_RXI

Source Field

pmIfOutOctetsLo

Source Section

FastEthernet

pmIfOutUcastPkts

The total number of unicast packets that higher-level protocols requested to be transmitted, and which were not addressed to a multicast or broadcast address at this sublayer, including those that were discarded or not sent. For additional info, refer to RFC 2863.

Data Source

RNC_RXI

Source Field

pmIfOutUcastPkts

Source Section

FastEthernet

FrameSynch Primitive Calculations

The following is a list of primitive calculations for the FrameSynch entity.

GRAPHmultiLineSeparator

Special Control Field for Multi-Line Graphs

Calculation

```
""
```

NUMDAYS

of days in Report

Calculation

```
DAYSINREPORT()
```

NUMHOURS

of hours in Summation Data

Calculation

FrameSynch Peg Counts

The following is a list of peg counts for the FrameSynch entity.

doStep

Downlink Offset step size. { long, Range = 0..10, Default=1 }

Data Source

Bulk CM

Source Section

DchFrameSynch

dto

Downlink Transport delay Offset. { long, Range = 1..200, Default=10 }

Data Source

Bulk CM

Source Section

DchFrameSynch

PERLENSEC

Period Length

Data Source

NodeB_RNC_RXI

Source Field

perlensec

Source Section

UeRc_WMGeneral

PERLENSEC_K

Period length in seconds aggregation summation in time domain and aggregation maximum between Network Elements.

Data Source

NodeB_RNC

Source Field

perlensec

Source Section

UeRc_WMGeneral

pmNoDchDlTimingAdjContrFrames

Number of received Downlink Timing Adjustment Control Frames for DCH.

Data Source

NodeB_RNC_RXI

Source Field

pmNoDchDlTimingAdjContrFrames

Source Section

DchFrameSynch

pmNoDchUlDataFramesOutsideWindow

Number of uplink data frames received outside desired window for DCH.

Data Source

NodeB_RNC_RXI

Source Field

pmNoDchUlDataFramesOutsideWindow

Source Section

DchFrameSynch

pmNoDlDchDiscardedDataFramesE

Number of discarded downlink data frames due to too-early reception for DCH.

Data Source

NodeB_RNC_RXI

Source Field

pmNoDlDchDiscardedDataFramesE

Source Section

DchFrameSynch

pmNoDlDchDiscardedDataFramesL

Number of discarded downlink data frames due to too-late reception for DCH.

Data Source

NodeB_RNC_RXI

Source Field

pmNoDlDchDiscardedDataFramesL

Source Section

DchFrameSynch

pmNoUlDchDiscardedDataFramesE

Number of discarded uplink data frames due to too-early reception for DCH.

Data Source

NodeB_RNC_RXI

Source Field

pmNoUlDchDiscardedDataFramesE

Source Section

DchFrameSynch

pmNoUlDchDiscardedDataFramesL

Number of discarded uplink data frames due to too-late reception for DCH.

Data Source

NodeB_RNC_RXI

Source Field

pmNoUlDchDiscardedDataFramesL

Source Section

DchFrameSynch

reservedBy

Reference back to the MO(s) that uses this DchFrameSynch instance . { sequence<ManagedObject,8>, Default = empty, Default=, ReadOnly, }

Data Source

Bulk CM

Source Section

DchFrameSynch

RNC_Release

Release

Data Source

NodeB_RNC_RXI

Source Section

DchFrameSynch

toAE

Downlink, time of arrival early point. { long, Range = 0..1279, Default=195 }

Data Source

Bulk CM

Source Section

DchFrameSynch

toAEUl

Uplink, time of arrival early point. { long, Range = 0..1279, Default=95 }

Data Source

Bulk CM

Source Section

DchFrameSynch

toAWE

Downlink, time of arrival window endpoint. { long, Range = 0..2559, Default=2 }

Data Source

Bulk CM

Source Section

DchFrameSynch

toAWEUl

Uplink, time of arrival window endpoint. { long, Range = 0..2559, Default=2 }

Data Source

Bulk CM

Source Section

DchFrameSynch

toAWS

Downlink, time of arrival window startpoint. { long, Range = 0..1279, Default=30 }

Data Source

Bulk CM

Source Section

DchFrameSynch

toAWSUl

Uplink, time of arrival window startpoint. { long, Range = 0..1279, Default=40 }

Data Source

Bulk CM

Source Section

DchFrameSynch

tProcRbsDl

System constant. { long, Default=5 }

Data Source

Bulk CM

Source Section

DchFrameSynch

tProcRbsUl

System constant. { long, Default=10 }

Data Source

Bulk CM

Source Section

DchFrameSynch

tProcRncDl

System constant. { long, Default=1 }

Data Source

Bulk CM

Source Section

DchFrameSynch

tProcRncUl

System constant. { long, Default=1 }

Data Source

Bulk CM

Source Section

DchFrameSynch

uoStep

Uplink Offset step size. { long, Range = 0..10, Default=1 }

Data Source

Bulk CM

Source Section

DchFrameSynch

userLabel

Provides the possibility to put a user-friendly label on the MO instance. The value is not used by the RNC. { string, LengthRange = 0..128, Default="" }

Data Source

Bulk CM

Source Section

DchFrameSynch

uto

Uplink Transport delay Offset. { long, Range = 1..200, Default=10 }

Data Source

Bulk CM

Source Section

DchFrameSynch

GeneralProcUnit_NodeB Primitive Calculations

The following is a list of primitive calculations for the GeneralProcUnit_NodeB entity.

GRAPHmultiLineSeparator

Special Control Field for Multi-Line Graphs

Calculation

```
""
```

NUMDAYS

of days in Report

Calculation

```
DAYSINREPORT()
```

NUMHOURS

of hours in Summation Data

Calculation

GeneralProcUnit_NodeB Peg Counts

The following is a list of peg counts for the GeneralProcUnit_NodeB entity.

pmAdmittedRequestsB0

Number of admitted requests with priority B0

Data Source

NodeB_RXI

Source Field

pmAdmittedRequestsB0

Source Section

LoadControl

pmAdmittedRequestsB1

Number of admitted requests with priority B1

Data Source

NodeB_RXI

Source Field

pmAdmittedRequestsB1

Source Section

LoadControl

pmAdmittedRequestsF0

Number of admitted requests with priority F0

Data Source

NodeB_RXI

Source Field

pmAdmittedRequestsF0

Source Section

LoadControl

pmAdmittedRequestsF1

Number of admitted requests with priority F1

Data Source

NodeB_RXI

Source Field

pmAdmittedRequestsF1

Source Section

LoadControl

pmAdmittedRequestsF2

Number of admitted requests with priority F2

Data Source

NodeB_RXI

Source Field

pmAdmittedRequestsF2

Source Section

LoadControl

pmAdmittedRequestsF3

Number of admitted requests with priority F3

Data Source

NodeB_RXI

Source Field

pmAdmittedRequestsF3

Source Section

LoadControl

pmAdmittedRequestsF4

Number of admitted requests with priority F4

Data Source

NodeB_RXI

Source Field

pmAdmittedRequestsF4

Source Section

LoadControl

pmMeasuredLoad_0

The processor load. Stored in percentage.

Data Source

RNC

Source Field

pmMeasuredLoad

Source Section

LoadControl

pmMeasuredLoad_1

The processor load. Stored in percentage.

Data Source

RNC

Source Field

pmMeasuredLoad

Source Section

LoadControl

pmMeasuredLoad_2

The processor load. Stored in percentage.

Data Source

RNC

Source Field

pmMeasuredLoad

Source Section

LoadControl

pmMeasuredLoad_3

The processor load. Stored in percentage.

Data Source

RNC

Source Field

pmMeasuredLoad

Source Section

LoadControl

pmMeasuredLoad_4

The processor load. Stored in percentage.

Data Source

RNC

Source Field

pmMeasuredLoad

Source Section

LoadControl

pmMeasuredLoad_5

The processor load. Stored in percentage.

Data Source

RNC

Source Field

pmMeasuredLoad

Source Section

LoadControl

pmMeasuredLoad_6

The processor load. Stored in percentage.

Data Source

RNC

Source Field

pmMeasuredLoad

Source Section

LoadControl

pmMeasuredLoad_7

The processor load. Stored in percentage.

Data Source

RNC

Source Field

pmMeasuredLoad

Source Section

LoadControl

pmRefusedRequestsB0

Number of rejected requests with priority B0

Data Source

NodeB_RXI

Source Field

pmRefusedRequestsB0

Source Section

LoadControl

pmRefusedRequestsB1

Number of rejected requests with priority B1

Data Source

NodeB_RXI

Source Field

pmRefusedRequestsB1

Source Section

LoadControl

pmRefusedRequestsF0

Number of rejected requests with priority F0

Data Source

NodeB_RXI

Source Field

pmRefusedRequestsF0

Source Section

LoadControl

pmRefusedRequestsF1

Number of rejected requests with priority F1

Data Source

NodeB_RXI

Source Field

pmRefusedRequestsF1

Source Section

LoadControl

pmRefusedRequestsF2

Number of rejected requests with priority F2

Data Source

NodeB_RXI

Source Field

pmRefusedRequestsF2

Source Section

LoadControl

pmRefusedRequestsF3

Number of rejected requests with priority F3

Data Source

NodeB_RXI

Source Field

pmRefusedRequestsF3

Source Section

LoadControl

pmRefusedRequestsF4

Number of rejected requests with priority F4

Data Source

RNC_RXI

Source Field

pmRefusedRequestsF4

Source Section

LoadControl

pmSamplesMeasuredLoad

Number of samples of the measured processor load

Source Field

pmSamplesMeasuredLoad

Source Section

LoadControl

pmSumMeasuredLoad

The sum of samples of the measured load. The load is measured in percentage (%).

Source Field

pmSumMeasuredLoad

Source Section

LoadControl

GeneralProcUnit_RNC Primitive Calculations

The following is a list of primitive calculations for the GeneralProcUnit_RNC entity.

GRAPHmultiLineSeparator

Special Control Field for Multi-Line Graphs

Calculation

""

NUMDAYS

of days in Report

Calculation

```
DAYSINREPORT()
```

NUMHOURS

of hours in Summation Data

Calculation

p_MeasuredLoad

Average value of all samples of the measured load in %

Calculation

```
( pmSumMeasuredLoad / pmSamplesMeasuredLoad ) * 100.0
```

GeneralProcUnit_RNC Peg Counts

The following is a list of peg counts for the GeneralProcUnit_RNC entity.

pmAdmittedRequestsB0

Number of admitted requests with priority B0

Data Source

RNC_RXI

Source Field

pmAdmittedRequestsB0

Source Section

LoadControl

pmAdmittedRequestsB1

Number of admitted requests with priority B1

Data Source

RNC_RXI

Source Field

pmAdmittedRequestsB1

Source Section

LoadControl

pmAdmittedRequestsF0

Number of admitted requests with priority F0

Data Source

RNC_RXI

Source Field

pmAdmittedRequestsF0

Source Section

LoadControl

pmAdmittedRequestsF1

Number of admitted requests with priority F1

Data Source

RNC_RXI

Source Field

pmAdmittedRequestsF1

Source Section

LoadControl

pmAdmittedRequestsF2

Number of admitted requests with priority F2

Data Source

RNC_RXI

Source Field

pmAdmittedRequestsF2

Source Section

LoadControl

pmAdmittedRequestsF3

Number of admitted requests with priority F3

Data Source

RNC_RXI

Source Field

pmAdmittedRequestsF3

Source Section

LoadControl

pmAdmittedRequestsF4

Number of admitted requests with priority F4

Data Source

RNC_RXI

Source Field

pmAdmittedRequestsF4

Source Section

LoadControl

pmMeasuredLoad_0

The processor load. Stored in percentage.

Data Source

RNC

Source Field

pmMeasuredLoad

Source Section

LoadControl

pmMeasuredLoad_1

The processor load. Stored in percentage.

Data Source

RNC

Source Field

pmMeasuredLoad

Source Section

LoadControl

pmMeasuredLoad_2

The processor load. Stored in percentage.

Data Source

RNC

Source Field

pmMeasuredLoad

Source Section

LoadControl

pmMeasuredLoad_3

The processor load. Stored in percentage.

Data Source

RNC

Source Field

pmMeasuredLoad

Source Section

LoadControl

pmMeasuredLoad_4

The processor load. Stored in percentage.

Data Source

RNC

Source Field

pmMeasuredLoad

Source Section

LoadControl

pmMeasuredLoad_5

The processor load. Stored in percentage.

Data Source

RNC

Source Field

pmMeasuredLoad

Source Section

LoadControl

pmMeasuredLoad_6

The processor load. Stored in percentage.

Data Source

RNC

Source Field

pmMeasuredLoad

Source Section

LoadControl

pmMeasuredLoad_7

The processor load. Stored in percentage.

Data Source

RNC

Source Field

pmMeasuredLoad

Source Section

LoadControl

pmRefusedRequestsB0

Number of rejected requests with priority B0

Data Source

RNC_RXI

Source Field

pmRefusedRequestsB0

Source Section

LoadControl

pmRefusedRequestsB1

Number of rejected requests with priority B1

Data Source

RNC_RXI

Source Field

pmRefusedRequestsB1

Source Section

LoadControl

pmRefusedRequestsF0

Number of rejected requests with priority F0

Data Source

RNC_RXI

Source Field

pmRefusedRequestsF0

Source Section

LoadControl

pmRefusedRequestsF1

Number of rejected requests with priority F1

Data Source

RNC_RXI

Source Field

pmRefusedRequestsF1

Source Section

LoadControl

pmRefusedRequestsF2

Number of rejected requests with priority F2

Data Source

RNC_RXI

Source Field

pmRefusedRequestsF2

Source Section

LoadControl

pmRefusedRequestsF3

Number of rejected requests with priority F3

Data Source

RNC_RXI

Source Field

pmRefusedRequestsF3

Source Section

LoadControl

pmRefusedRequestsF4

Number of rejected requests with priority F4

Data Source

RNC_RXI

Source Field

pmRefusedRequestsF4

Source Section

LoadControl

pmSamplesMeasuredLoad

Number of samples of the measured processor load

Source Field

pmSamplesMeasuredLoad

Source Section

LoadControl

pmSumMeasuredLoad

The sum of samples of the measured load. The load is measured in percentage (%).

Source Field

pmSumMeasuredLoad

Source Section

LoadControl

GigaBitEthernet_NodeB Primitive Calculations

The following is a list of primitive calculations for the GigaBitEthernet_NodeB entity.

GRAPHmultiLineSeparator

Special Control Field for Multi-Line Graphs

Calculation

""

NUMDAYS

of days in Report

Updated: 2009-07-22

Calculation

```
DAYSINREPORT()
```

NUMHOURS

of hours in Summation Data

pmIfInOctetsLink1

The total number of octets received on the interface, including framing characters

Calculation

```
pmIfInOctetsLink1Hi + pmIfInOctetsLink1Lo
```

pmIfInOctetsLink2

The total number of octets received on the interface, including framing characters

Calculation

```
pmIfInOctetsLink2Hi + pmIfInOctetsLink2Lo
```

pmIfOutOctetsLink1

The total number of octets transmitted out of the interface, including framing characters.

Calculation

```
pmIfOutOctetsLink1Hi + pmIfOutOctetsLink1Lo
```

pmIfOutOctetsLink2

The total number of octets transmitted out of the interface, including framing characters.

Calculation

```
pmIfOutOctetsLink2Hi + pmIfOutOctetsLink2Lo
```

GigaBitEthernet_NodeB Peg Counts

The following is a list of peg counts for the GigaBitEthernet_NodeB entity.

PERLENSEC

Period length in seconds

Data Source

NodeB_RXI

Source Field

gp

Source Section

GigaBitEthernet

PERLENSEC_K

Period length in seconds aggregation summation in time domain and aggregation maximum between Network Elements.

Data Source

NodeB_RXI

Source Field

gp

Source Section

GigaBitEthernet

pmDot1qTpVlanPortInDiscLink1

The number of valid frames discarded due to VLAN reasons (e.g. VLAN id not configured). See RFC 2674.

Data Source

NodeB_RXI

Source Field

pmDot1qTpVlanPortInDiscardsLink1

Source Section

GigaBitEthernet

pmDot1qTpVlanPortInDiscLink2

The number of valid frames discarded due to VLAN reasons (e.g. VLAN id not configured). See RFC 2674.

Data Source

NodeB_RXI

Source Field

pmDot1qTpVlanPortInDiscardsLink2

Source Section

GigaBitEthernet

pmIfInBroadcastPktsLink1

The number of packets received with a broadcast address delivered to a higher sub-layer. See RFC 2863.

Data Source

NodeB_RXI

Source Field

pmIfInBroadcastPktsLink1

Source Section

GigaBitEthernet

pmIfInBroadcastPktsLink2

The number of packets received with a broadcast address delivered to a higher sub-layer. See RFC 2863.

Data Source

NodeB_RXI

Source Field

pmIfInBroadcastPktsLink2

Source Section

GigaBitEthernet

pmIfInDiscardsLink1

The number of received packets discarded due to lack of resources (e.g. buffer space). See RFC 2863.

Data Source

NodeB_RXI

Source Field

pmIfInDiscardsLink1

Source Section

GigaBitEthernet

pmIfInDiscardsLink2

The number of received packets discarded due to lack of resources (e.g. buffer space). See RFC 2863.

Data Source

NodeB_RXI

Source Field

pmIfInDiscardsLink2

Source Section

GigaBitEthernet

pmIfInErrorsLink1

The number of packets received which were discarded due to errors found in the packets. See RFC 2863.

Data Source

NodeB_RXI

Source Field

pmIfInErrorsLink1

Source Section

GigaBitEthernet

pmIfInErrorsLink2

The number of packets received which were discarded due to errors found in the packets. See RFC 2863.

Data Source

NodeB_RXI

Source Field

pmIfInErrorsLink2

Source Section

GigaBitEthernet

pmIfInMulticastPktsLink1

The number of packets received with a multicast address delivered to a higher sub-layer. See RFC 2863.

Data Source

NodeB_RXI

Source Field

pmIfInMulticastPktsLink1

Source Section

GigaBitEthernet

pmIfInMulticastPktsLink2

The number of packets received with a multicast address delivered to a higher sub-layer. See RFC 2863.

Data Source

NodeB_RXI

Source Field

pmIfInMulticastPktsLink2

Source Section

GigaBitEthernet

pmIfInOctetsLink1Hi

The total number of octets received on the interface, including framing characters. Note: The high capacity counter for received octets on an interface has been split into two parts. This counter represents the higher part of the 62 least significant bits of the high capacity counter for received octets. The two most significant bit of this 64 bit counter is discarded. This 64-bit counter is presented as 2*31 bits: pmIfInOctetsLinkxHi (bit 62-31) and pmIfInOctetsLinkxLo (bit 30-0). For additional info refer to RFC 2863.

Data Source

NodeB_RXI

Source Field

pmIfInOctetsLink1Hi * 2147483648

Source Section

GigaBitEthernet

pmIfInOctetsLink1Lo

The total number of octets received on the interface, including framing characters. Note: The high capacity counter for received octets an interface has been split into two parts. This counter represents the lower part of the 62 least significant bits of the high capacity counter for received octets. The two most significant bit of this 64 bit counter is discarded. This 64-bit counter is presented as 2*31 bits: pmIfInOctetsLinkxHi (bit 62-31) and pmIfInOctetsLinkxLo (bit 30-0). For additional info refer to RFC 2863.

Data Source

NodeB_RXI

Source Field

pmIfInOctetsLink1Lo

Source Section

GigaBitEthernet

pmIfInOctetsLink2Hi

The total number of octets received on the interface, including framing characters. Note: The high capacity counter for received octets on an interface has been split into two parts. This counter represents the higher part of the 62 least significant bits of the high capacity counter for received octets. The two most significant bit of this 64 bit counter is discarded. This 64-bit counter is presented as 2*31 bits: pmIfInOctetsLinkxHi (bit 62-31) and pmIfInOctetsLinkxLo (bit 30-0). For additional info refer to RFC 2863.

Data Source

NodeB_RXI

Source Field

pmIfInOctetsLink2Hi * 2147483648

Source Section

GigaBitEthernet

pmIfInOctetsLink2Lo

The total number of octets received on the interface, including framing characters. Note: The high capacity counter for received octets an interface has been split into two parts. This counter represents the lower part of the 62 least significant bits of the high capacity counter for received octets. The two most significant bit of this 64 bit counter is discarded. This 64-bit counter is presented as 2*31 bits: pmIfInOctetsLinkxHi (bit 62-31) and pmIfInOctetsLinkxLo (bit 30-0). For additional info refer to RFC 2863.

Data Source

NodeB_RXI

Source Field

pmIfInOctetsLink2Lo

Source Section

GigaBitEthernet

pmIfInUcastPktsLink1

The number of packets received which was not addressed to a broadcast or broadcast address delivered to a higher sub-layer. For additional info refer to RFC 2863.

Data Source

NodeB_RXI

Source Field

pmIfInUcastPktsLink1

Source Section

GigaBitEthernet

pmIfInUcastPktsLink2

The number of packets received which was not addressed to a broadcast or broadcast address delivered to a higher sub-layer. For additional info refer to RFC 2863.

Data Source

NodeB_RXI

Source Field

pmIfInUcastPktsLink2

Source Section

GigaBitEthernet

pmIfInUnknownProtosLink1

The number of packets received which had a protocol not supported or unknown. See RFC 2863.

Data Source

NodeB_RXI

Source Field

pmIfInUnknownProtosLink1

Source Section

GigaBitEthernet

pmIfInUnknownProtosLink2

The number of packets received which had a protocol not supported or unknown. See RFC 2863.

Data Source

NodeB_RXI

Source Field

pmIfInUnknownProtosLink2

Source Section

GigaBitEthernet

pmIfOutBroadcastPktsLink1

The number of packets requested to be transmitted with a broadcast address delivered to a higher sub-layer. See RFC 2863.

Data Source

NodeB_RXI

Source Field

pmIfOutBroadcastPktsLink1

Source Section

GigaBitEthernet

pmIfOutBroadcastPktsLink2

The number of packets requested to be transmitted with a broadcast address delivered to a higher sub-layer. See RFC 2863.

Data Source

NodeB_RXI

Source Field

pmIfOutBroadcastPktsLink2

Source Section

GigaBitEthernet

pmIfOutDiscardsLink1

The number of packets requested to be transmitted discarded due to lack of resources (e.g. buffer space). See RFC 2863.

Data Source

NodeB_RXI

Source Field

pmIfOutDiscardsLink1

Source Section

GigaBitEthernet

pmIfOutDiscardsLink2

The number of packets requested to be transmitted discarded due to lack of resources (e.g. buffer space). See RFC 2863.

Data Source

NodeB_RXI

Source Field

pmIfOutDiscardsLink2

Source Section

GigaBitEthernet

pmIfOutErrorsLink1

The number of packets requested to be transmitted discarded due to errors found in the packets. See RFC 2863.

Data Source

NodeB_RXI

Source Field

pmIfOutErrorsLink1

Source Section

GigaBitEthernet

pmIfOutErrorsLink2

The number of packets requested to be transmitted discarded due to errors found in the packets. See RFC 2863.

Data Source

NodeB_RXI

Source Field

pmIfOutErrorsLink2

Source Section

GigaBitEthernet

pmIfOutMulticastPktsLink1

The number of packets requested to be transmitted with a multicast address delivered to a higher sub-layer. See RFC 2863.

Data Source

NodeB_RXI

Source Field

pmIfOutMulticastPktsLink1

Source Section

GigaBitEthernet

pmIfOutMulticastPktsLink2

The number of packets requested to be transmitted with a multicast address delivered to a higher sub-layer. See RFC 2863.

Data Source

NodeB_RXI

Source Field

pmIfOutMulticastPktsLink2

Source Section

GigaBitEthernet

pmIfOutOctetsLink1Hi

The total number of octets transmitted out of the interface, including framing characters. Note: The high capacity counter for octets transmitted out on an interface has been split into two parts. This counter represents the higher part of the 62 least significant bits of the high capacity counter for octets transmitted out on the interface. The two most significant bit of this 64 bit counter is discarded. This 64-bit counter is presented as 2*31 bits: pmIfOutOctetsLinkxHi (bit 62-31) and pmIfOutOctetsLinkxLo (bit 30-0). For additional info refer to RFC 2863.

Data Source

NodeB_RXI

Source Field

pmIfOutOctetsLink1Hi * 2147483648

Source Section

GigaBitEthernet

pmIfOutOctetsLink1Lo

The total number of octets transmitted out of the interface, including framing characters. Note: The high capacity counter for octets transmitted out on an interface has been split into two parts. This counter represents the lower part of the 62 least significant bits of the high capacity counter

for octets transmitted out on the interface. The two most significant bit of this 64 bit counter is discarded. This 64-bit counter is presented as 2*31 bits: pmIfOutOctetsLinkxHi (bit 62-31) and pmIfOutOctetsLinkxLo (bit 30-0). For additional info refer to RFC 2863.

Data Source

NodeB_RXI

Source Field

pmIfOutOctetsLink1Lo

Source Section

GigaBitEthernet

pmIfOutOctetsLink2Hi

The total number of octets transmitted out of the interface, including framing characters. Note: The high capacity counter for octets transmitted out on an interface has been split into two parts. This counter represents the higher part of the 62 least significant bits of the high capacity counter for octets transmitted out on the interface. The two most significant bit of this 64 bit counter is discarded. This 64-bit counter is presented as 2*31 bits: pmIfOutOctetsLinkxHi (bit 62-31) and pmIfOutOctetsLinkxLo (bit 30-0). For additional info refer to RFC 2863.

Data Source

NodeB_RXI

Source Field

pmIfOutOctetsLink2Hi * 2147483648

Source Section

GigaBitEthernet

pmIfOutOctetsLink2Lo

The total number of octets transmitted out of the interface, including framing characters. Note: The high capacity counter for octets transmitted out on an interface has been split into two parts. This counter represents the lower part of the 62 least significant bits of the high capacity counter for octets transmitted out on the interface. The two most significant bit of this 64 bit counter is discarded. This 64-bit counter is presented as 2*31 bits: pmIfOutOctetsLinkxHi (bit 62-31) and pmIfOutOctetsLinkxLo (bit 30-0). For additional info refer to RFC 2863.

Data Source

NodeB_RXI

Source Field

pmIfOutOctetsLink2Lo

Source Section

GigaBitEthernet

pmIfOutUcastPktsLink1

The number of packets requested to be transmitted which was not addressed to a broadcast or broadcast address delivered to a higher sub-layer. See RFC 2863.

Data Source

NodeB_RXI

Source Field

pmIfOutUcastPktsLink1

Source Section

GigaBitEthernet

pmIfOutUcastPktsLink2

The number of packets requested to be transmitted which was not addressed to a broadcast or broadcast address delivered to a higher sub-layer. See RFC 2863.

Data Source

NodeB_RXI

Source Field

pmIfOutUcastPktsLink2

Source Section

GigaBitEthernet

GigaBitEthernet_RNC Primitive Calculations

The following is a list of primitive calculations for the GigaBitEthernet_RNC entity.

GRAPHmultiLineSeparator

Special Control Field for Multi-Line Graphs

Calculation

```
""
```

NUMDAYS

of days in Report

Calculation

```
DAYSINREPORT()
```

NUMHOURS

of hours in Summation Data

pmIfInOctetsLink1

The total number of octets received on the interface, including framing characters

Calculation

```
pmIfInOctetsLink1Hi + pmIfInOctetsLink1Lo
```

pmIfInOctetsLink2

The total number of octets received on the interface, including framing characters

Calculation

```
pmIfInOctetsLink2Hi + pmIfInOctetsLink2Lo
```

pmIfOutOctetsLink1

The total number of octets transmitted out of the interface, including framing characters.

Calculation

```
pmIfOutOctetsLink1Hi + pmIfOutOctetsLink1Lo
```

pmIfOutOctetsLink2

The total number of octets transmitted out of the interface, including framing characters.

Calculation

```
pmIfOutOctetsLink2Hi + pmIfOutOctetsLink2Lo
```

GigaBitEthernet_RNC Peg Counts

The following is a list of peg counts for the GigaBitEthernet_RNC entity.

PERLENSEC

Period length in seconds

Data Source

RNC_RXI

Source Field

gp

Source Section

GigaBitEthernet

PERLENSEC_K

Period length in seconds aggregation summation in time domain and aggregation maximum between Network Elements.

Data Source

RNC_RXI

Source Field

gp

Source Section

GigaBitEthernet

pmDot1qTpVlanPortInDiscLink1

The number of valid frames discarded due to VLAN reasons (e.g. VLAN id not configured). See RFC 2674.

Data Source

RNC_RXI

Source Field

pmDot1qTpVlanPortInDiscardsLink1

Source Section

GigaBitEthernet

pmDot1qTpVlanPortInDiscLink2

The number of valid frames discarded due to VLAN reasons (e.g. VLAN id not configured). See RFC 2674.

Data Source

RNC_RXI

Source Field

pmDot1qTpVlanPortInDiscardsLink2

Source Section

GigaBitEthernet

pmIfInBroadcastPktsLink1

The number of packets received with a broadcast address delivered to a higher sub-layer. See RFC 2863.

Data Source

RNC_RXI

Source Field

pmIfInBroadcastPktsLink1

Source Section

GigaBitEthernet

pmIfInBroadcastPktsLink2

The number of packets received with a broadcast address delivered to a higher sub-layer. See RFC 2863.

Data Source

RNC_RXI

Source Field

pmIfInBroadcastPktsLink2

Source Section

GigaBitEthernet

pmIfInDiscardsLink1

The number of received packets discarded due to lack of resources (e.g. buffer space). See RFC 2863.

Data Source

RNC_RXI

Source Field

pmIfInDiscardsLink1

Source Section

GigaBitEthernet

pmIfInDiscardsLink2

The number of received packets discarded due to lack of resources (e.g. buffer space). See RFC 2863.

Data Source

RNC_RXI

Source Field

pmIfInDiscardsLink2

Source Section

GigaBitEthernet

pmIfInErrorsLink1

The number of packets received which were discarded due to errors found in the packets. See RFC 2863.

Data Source

RNC_RXI

Source Field

pmIfInErrorsLink1

Source Section

GigaBitEthernet

pmIfInErrorsLink2

The number of packets received which were discarded due to errors found in the packets. See RFC 2863.

Data Source

RNC_RXI

Source Field

pmIfInErrorsLink2

Source Section

GigaBitEthernet

pmIfInMulticastPktsLink1

The number of packets received with a multicast address delivered to a higher sub-layer. See RFC 2863.

Data Source

RNC_RXI

Source Field

pmIfInMulticastPktsLink1

Source Section

GigaBitEthernet

pmIfInMulticastPktsLink2

The number of packets received with a multicast address delivered to a higher sub-layer. See RFC 2863.

Data Source

RNC_RXI

Source Field

pmIfInMulticastPktsLink2

Source Section

GigaBitEthernet

pmIfInOctetsLink1Hi

The total number of octets received on the interface, including framing characters. Note: The high capacity counter for received octets on an interface has been split into two parts. This counter represents the higher part of the 62 least significant bits of the high capacity counter for received octets. The two most significant bit of this 64 bit counter is discarded. This 64-bit counter is presented as 2*31 bits: pmIfInOctetsLinkxHi (bit 62-31) and pmIfInOctetsLinkxLo (bit 30-0). For additional info refer to RFC 2863.

Data Source

RNC_RXI

Source Field

pmIfInOctetsLink1Hi * 2147483648

Source Section

GigaBitEthernet

pmIfInOctetsLink1Lo

The total number of octets received on the interface, including framing characters. Note: The high capacity counter for received octets an interface has been split into two parts. This counter represents the lower part of the 62 least significant bits of the high capacity counter for received octets. The two most significant bit of this 64 bit counter is discarded. This 64-bit counter is presented as 2*31 bits: pmIfInOctetsLinkxHi (bit 62-31) and pmIfInOctetsLinkxLo (bit 30-0). For additional info refer to RFC 2863.

Data Source

RNC_RXI

Source Field

pmIfInOctetsLink1Lo

Source Section

GigaBitEthernet

pmIfInOctetsLink2Hi

The total number of octets received on the interface, including framing characters. Note: The high capacity counter for received octets on an interface has been split into two parts. This counter represents the higher part of the 62 least significant bits of the high capacity counter for received octets. The two most significant bit of this 64 bit counter is discarded. This 64-bit counter is presented as 2*31 bits: pmIfInOctetsLinkxHi (bit 62-31) and pmIfInOctetsLinkxLo (bit 30-0). For additional info refer to RFC 2863.

Data Source

RNC_RXI

Source Field

pmIfInOctetsLink2Hi * 2147483648

Source Section

GigaBitEthernet

pmIfInOctetsLink2Lo

The total number of octets received on the interface, including framing characters. Note: The high capacity counter for received octets an interface has been split into two parts. This counter represents the lower part of the 62 least significant bits of the high capacity counter for received octets. The two most significant bit of this 64 bit counter is discarded. This 64-bit counter is presented as 2*31 bits: pmIfInOctetsLinkxHi (bit 62-31) and pmIfInOctetsLinkxLo (bit 30-0). For additional info refer to RFC 2863.

Data Source

RNC_RXI

Source Field

pmIfInOctetsLink2Lo

Source Section

GigaBitEthernet

pmIfInUcastPktsLink1

The number of packets received which was not addressed to a broadcast or broadcast address delivered to a higher sub-layer. For additional info refer to RFC 2863.

Data Source

RNC_RXI

Source Field

pmIfInUcastPktsLink1

Source Section

GigaBitEthernet

pmIfInUcastPktsLink2

The number of packets received which was not addressed to a broadcast or broadcast address delivered to a higher sub-layer. For additional info refer to RFC 2863.

Data Source

RNC_RXI

Source Field

pmIfInUcastPktsLink2

Source Section

GigaBitEthernet

pmIfInUnknownProtosLink1

The number of packets received which had a protocol not supported or unknown. See RFC 2863.

Data Source

RNC_RXI

Source Field

pmIfInUnknownProtosLink1

Source Section

GigaBitEthernet

pmIfInUnknownProtosLink2

The number of packets received which had a protocol not supported or unknown. See RFC 2863.

Data Source

RNC_RXI

Source Field

pmIfInUnknownProtosLink2

Source Section

GigaBitEthernet

pmIfOutBroadcastPktsLink1

The number of packets requested to be transmitted with a broadcast address delivered to a higher sub-layer. See RFC 2863.

Data Source

RNC_RXI

Source Field

pmIfOutBroadcastPktsLink1

Source Section

GigaBitEthernet

pmIfOutBroadcastPktsLink2

The number of packets requested to be transmitted with a broadcast address delivered to a higher sub-layer. See RFC 2863.

Data Source

RNC_RXI

Source Field

pmIfOutBroadcastPktsLink2

Source Section

GigaBitEthernet

pmIfOutDiscardsLink1

The number of packets requested to be transmitted discarded due to lack of resources (e.g. buffer space). See RFC 2863.

Data Source

RNC_RXI

Source Field

pmIfOutDiscardsLink1

Source Section

GigaBitEthernet

pmIfOutDiscardsLink2

The number of packets requested to be transmitted discarded due to lack of resources (e.g. buffer space). See RFC 2863.

Data Source

RNC_RXI

Source Field

pmIfOutDiscardsLink2

Source Section

GigaBitEthernet

pmIfOutErrorsLink1

The number of packets requested to be transmitted discarded due to errors found in the packets. See RFC 2863.

Data Source

RNC_RXI

Source Field

pmIfOutErrorsLink1

Source Section

GigaBitEthernet

pmIfOutErrorsLink2

The number of packets requested to be transmitted discarded due to errors found in the packets. See RFC 2863.

Data Source

RNC_RXI

Source Field

pmIfOutErrorsLink2

Source Section

GigaBitEthernet

pmIfOutMulticastPktsLink1

The number of packets requested to be transmitted with a multicast address delivered to a higher sub-layer. See RFC 2863.

Data Source

RNC_RXI

Source Field

pmIfOutMulticastPktsLink1

Source Section

GigaBitEthernet

pmIfOutMulticastPktsLink2

The number of packets requested to be transmitted with a multicast address delivered to a higher sub-layer. See RFC 2863.

Data Source

RNC_RXI

Source Field

pmIfOutMulticastPktsLink2

Source Section

GigaBitEthernet

pmIfOutOctetsLink1Hi

The total number of octets transmitted out of the interface, including framing characters. Note: The high capacity counter for octets transmitted out on an interface has been split into two parts. This counter represents the higher part of the 62 least significant bits of the high capacity counter for octets transmitted out on the interface. The two most significant bit of this 64 bit counter is discarded. This 64-bit counter is presented as 2*31 bits: pmIfOutOctetsLinkxHi (bit 62-31) and pmIfOutOctetsLinkxLo (bit 30-0). For additional info refer to RFC 2863.

Data Source

RNC_RXI

Source Field

pmIfOutOctetsLink1Hi * 2147483648

Source Section

GigaBitEthernet

pmIfOutOctetsLink1Lo

The total number of octets transmitted out of the interface, including framing characters. Note: The high capacity counter for octets transmitted out on an interface has been split into two parts. This counter represents the lower part of the 62 least significant bits of the high capacity counter for octets transmitted out on the interface. The two most significant bit of this 64 bit counter is discarded. This 64-bit counter is presented as 2*31 bits: pmIfOutOctetsLinkxHi (bit 62-31) and pmIfOutOctetsLinkxLo (bit 30-0). For additional info refer to RFC 2863.

Data Source

RNC_RXI

Source Field

pmIfOutOctetsLink1Lo

Source Section

GigaBitEthernet

pmIfOutOctetsLink2Hi

The total number of octets transmitted out of the interface, including framing characters. Note: The high capacity counter for octets transmitted out on an interface has been split into two parts. This counter represents the higher part of the 62 least significant bits of the high capacity counter for octets transmitted out on the interface. The two most significant bit of this 64 bit counter is discarded. This 64-bit counter is presented as 2*31 bits: pmIfOutOctetsLinkxHi (bit 62-31) and pmIfOutOctetsLinkxLo (bit 30-0). For additional info refer to RFC 2863.

Data Source

RNC_RXI

Source Field

pmIfOutOctetsLink2Hi * 2147483648

Source Section

GigaBitEthernet

pmIfOutOctetsLink2Lo

The total number of octets transmitted out of the interface, including framing characters. Note: The high capacity counter for octets transmitted out on an interface has been split into two parts.

This counter represents the lower part of the 62 least significant bits of the high capacity counter for octets transmitted out on the interface. The two most significant bit of this 64 bit counter is discarded. This 64-bit counter is presented as 2*31 bits: pmIfOutOctetsLinkxHi (bit 62-31) and pmIfOutOctetsLinkxLo (bit 30-0). For additional info refer to RFC 2863.

Data Source

RNC_RXI

Source Field

pmIfOutOctetsLink2Lo

Source Section

GigaBitEthernet

pmIfOutUcastPktsLink1

The number of packets requested to be transmitted which was not addressed to a broadcast or broadcast address delivered to a higher sub-layer. See RFC 2863.

Data Source

RNC_RXI

Source Field

pmIfOutUcastPktsLink1

Source Section

GigaBitEthernet

pmIfOutUcastPktsLink2

The number of packets requested to be transmitted which was not addressed to a broadcast or broadcast address delivered to a higher sub-layer. See RFC 2863.

Data Source

RNC_RXI

Source Field

pmIfOutUcastPktsLink2

Source Section

GigaBitEthernet

GsmRelation Primitive Calculations

The following is a list of primitive calculations for the GsmRelation entity.

GRAPHmultiLineSeparator

Special Control Field for Multi-Line Graphs

Calculation

```
""
```

GSM_Cell_Change_Failure_Rate_PS_Interactive

Cell change failure rate between UtranCell and target GSM cell for PS calls when the UE successfully returns to UtranCell

Calculation

```
100.0 * pmNoOutIratCcReturnOldCh /  pmNoOutIratCcAtt
```

GSM_Handover_Success_Rate_Multi_RAB

Hard handover success rate between UtranCell and target GSM cell for Multi-RAB calls.

Calculation

```
100.0 * pmNoSuccessOutIratHoMulti / pmNoAttOutIratHoMulti
```

GSM_Handover_Success_Rate_Speech

Inter Radio Access Technology (GSM) Handover Success Rate for SpeechThe following metric measures hard handover success rate between UtranCell and target GSM cell for speech calls.

Calculation

```
100.0 * pmNoSuccessOutIratHoSpeech /  pmNoAttOutIratHoSpeech
```

GSM_Handover_Success_Rate_Streaming_CS_57

Hard handover success rate between UtranCell and target GSM cell for CS streaming calls.

Calculation

```
100.0 * pmNoSuccessOutIratHoCs57 / pmNoAttOutIratHoCs57
```

GSM_HO_OUT_FAIL

UMTS to GSM circuit switched handover failure rate %

Calculation

```
(pmNoOutIratHoAtt - pmNoOutIratHoSuccess) * 100.0 / pmNoOutIratHoAtt
```

NUMDAYS

of days in Report

Calculation

```
DAYSINREPORT()
```

NUMHOURS

of hours in Summation Data

Calculation

GsmRelation Peg Counts

The following is a list of peg counts for the GsmRelation entity.

adjacentCell

Pointer to GSM cell or external GSM cell. Distinguished Name of the corresponding object.

Data Source

Bulk CM

Source Field

gn:adjacentCell

Source Section

GsmRelation

bcc

Base station colour code, BCC (part of BSIC. Ref 3GPP TS 44.018 [4]) for the external GSM cell, that is broadcast in System Information in the Cell.The external GSM cell identity. This is the identity of the GSM cell. It is unique within a location area. The cI along with the LAI (Location area identity) makes up the CGI (cell global identification).

Data Source

Bulk CM

Source Field

gn:bcc

Source Section

ExternalGsmCell

bcchFrequency

This attribute contains the absolute radio frequency channel number of the BCCH channel of the external GSM cell, that is broadcast in System Information in the Cell.

Data Source

Bulk CM

Source Field

gn:bcchFrequency

Source Section

ExternalGsmCell

cellIdentity

Cell Identity (Ref 3GPP TS 24.008 [3]).

Data Source

Bulk CM

Source Field

gn:cellIdentity

Source Section

ExternalGsmCell

lac

Location Area Code, LAC (Ref. 3GPP TS 23.003)

Data Source

Bulk CM

Source Field

gn:lac

Source Section

ExternalGsmCell

mcc

Mobile Country Code, MCC. It is a part of the PLMN Id (Ref. 3GPP TS 23.003).

Data Source

Bulk CM

Source Field

gn:mcc

Source Section

ExternalGsmCell

mnc

Mobile Network Code, MNC. It is a part of the PLMN Id (Ref. 3GPP TS 23.003).

Data Source

Bulk CM

Source Field

gn:mnc

Source Section

ExternalGsmCell

mobilityRelationType

Type of the mobility relation. { string, Default= HO_AND_CELL_RESEL }

Data Source

Bulk CM

Source Section

GsmRelation

ncc

Network Colour Code, NCC (part of BSIC. Ref 3GPP TS 44.018 [4]) for the external GSM cell, that is broadcast in System Information in the Cell.

Data Source

Bulk CM

Source Field

gn:ncc

Source Section

ExternalGsmCell

NodeB_RELEASE

Release

Data Source

NodeB_RNC_RXI

Source Section

GsmRelation

PERLENSEC

Period Length

Data Source

NodeB_RNC_RXI

Source Field

perlensec

Source Section

GsmRelation_WMGeneral

PERLENSEC_K

Period length in seconds aggregation summation in time domain and aggregation maximum between Network Elements.

Data Source

NodeB_RNC

Source Field

perlensec

Source Section

GsmRelation_WMGeneral

pmAttLbhoSpeech

Number of attempted outgoing (to GSM) load-based handovers. Incremented in the relation between the best cell in the active set and the target cell. If the best cell in the active set has no cell relation towards the target cell, the handover will not be counted in this RNC.

Data Source

RNC

Source Field

pmAttLbhoSpeech

Source Section

GsmRelation

pmFailLbhoSpeechGsmFailure

Number of outgoing (to GSM) load-based handovers that failed due to GSM resource allocation failure. Incremented in the relation between the best cell in the active set and the target cell. If the best cell in the active set has no cell relation towards the target cell, the handover will not be counted in this RNC.

Data Source

RNC

Source Field

pmFailLbhoSpeechGsmFailure

Source Section

GsmRelation

pmFailLbhoSpeechNotPhyChFail

Number of outgoing (to GSM) load-based handovers that failed due to reasons other than physical channel failure, where the UE returns to the present active set. Incremented in the relation between the best cell in the active set and the target cell. If the best cell in the active set has no cell relation towards the target cell, the handover will not be counted in this RNC.

Data Source

RNC

Source Field

pmFailLbhoSpeechNotPhyChFail

Source Section

GsmRelation

pmFailLbhoSpeechPhyChFRtn

Number of outgoing (to GSM) load-based handovers that failed due to physical channel failure, where the UE returns to the present active set. Incremented in the relation between the best cell in the active set and the target cell. If the best cell in the active set has no cell relation towards the target cell, the handover will not be counted in this RNC.

Data Source

RNC

Source Field

pmFailLbhoSpeechPhyChFailReturn

Source Section

GsmRelation

pmFailLbhoSpeechUeReject

Number of outgoing (to GSM) load-based handovers that failed due to rejection by the UE. Incremented in the relation between the best cell in the active set and the target cell. If the best cell in the active set has no cell relation towards the target cell, the handover will not be counted in this RNC.

Data Source

RNC

Source Field

pmFailLbhoSpeechUeReject

Source Section

GsmRelation

pmNoAttOutIratHoCs57

Number of attempted outgoing (to GSM) inter-RAT handover for 'streaming 57.6 kbps CS RAB' for the best cell in the active set.

pmNoAttOutIratHoMulti

Number of attempted outgoing (to GSM) inter-RAT handover for 'multi RAB' for the best cell in the active set.

pmNoAttOutIratHoSpeech

Number of attempted outgoing (to GSM) inter-RAT handover for 'Conversational speech RAB' for the best cell in the active set.

pmNoAttOutIratHoStandalone

Number of attempted outgoing (to GSM) inter-RAT handover for 'Standalone signalling connection' for the best cell in the active set.

pmNoAttOutSbHoSpeech

Number of attempted outgoing Service Based GSM Handover for 'Conversational speech RAB' for the best cell in the active set.

Data Source

RNC

Source Field

pmNoAttOutSbHoSpeech

Source Section

GsmRelation

pmNoFailOutIratHoCs57GsmFailure

Number of failed outgoing (to GSM) inter-RAT handover due to GSM resource allocation failure, for 'streaming 57.6 kbps CS RAB' for the best cell in the active set.

pmNoFailOutIratHoCs57ReturnOldChNotPhyChFail

Number of failed outgoing (to GSM) inter-RAT handover due to reasons other than physical channel failure, where the UE fails to return to the present Active Set for 'streaming 57.6 kbps CS RAB' for the best cell in the active set.

pmNoFailOutIratHoCs57ReturnOldChPhyChFail

Number of failed outgoing (to GSM) inter-RAT handover due to physical channel failure, where the UE returns to the present Active Set for 'streaming 57.6 kbps CS RAB' for the best cell in the active set.

pmNoFailOutIratHoCs57UeRejection

Number of failed outgoing (to GSM) inter-RAT handover, rejected by UE, for 'streaming 57.6 kbps CS RAB' for the best cell in the active set.

pmNoFailOutIratHoMultiGsmFailure

Number of failed outgoing (to GSM) inter-RAT handover due to GSM resource allocation failure, for 'multi RAB' for the best cell in the active set.

pmNoFailOutIratHoMultiReturnOldChNotPhyChFail

Number of failed outgoing (to GSM) inter-RAT handover due to reasons other than physical channel failure, where the UE fails to return to the present Active Set for 'multi RAB' for the best cell in the active set.

pmNoFailOutIratHoMultiReturnOldChPhyChFail

Number of failed outgoing (to GSM) inter-RAT handover due to physical channel failure, where the UE returns to the present Active Set for 'multi RAB' for the best cell in the active set.

pmNoFailOutIratHoMultiUeRejection

Number of failed outgoing (to GSM) inter-RAT handover, rejected by UE, for 'multi RAB' for the best cell in the active set.

pmNoFailOutIratHoSpeechGsmFailure

Number of failed outgoing (to GSM) inter-RAT handover due to GSM resource allocation failure, for 'Conversational speech RAB' for the best cell in the active set.

pmNoFailOutIratHoSpeechReturnOldChNotPhyChFail

Number of failed outgoing (to GSM) inter-RAT handover due to reasons other than physical channel failure, where the UE fails to return to the present Active Set for 'Conversational speech RAB' for the best cell in the active set.

pmNoFailOutIratHoSpeechReturnOldChPhyChFail

Number of failed outgoing (to GSM) inter-RAT handover due to physical channel failure, where the UE returns to the present Active Set for 'Conversational speech RAB' for the best cell in the active set.

pmNoFailOutIratHoSpeechUeRejection

Number of failed outgoing (to GSM) inter-RAT handover, rejected by UE, for 'Conversational speech RAB' for the best cell in the active set.

pmNoFailOutIratHoStandaloneGsmFailure

Number of failed outgoing (to GSM) inter-RAT handover due to GSM resource allocation failure, for 'Standalone signalling connection' for the best cell in the active set.

pmNoFailOutIratHoStandaloneReturnOldChNotPhyChFail

Number of failed outgoing (to GSM) inter-RAT handover due to reasons other than physical channel failure, where the UE fails to return to the present Active Set for 'Standalone signalling connection' for the best cell in the active set.

Data Source

RNC

Source Field

pmNoFailOutIratHoStandaloneReturnOldChNotPhyChFail

Source Section

GsmRelation

pmNoFailOutIratHoStandaloneReturnOldNotChPhyChFail

Number of failed outgoing (to GSM) inter-RAT handover due to reasons other than physical channel failure, where the UE fails to return to the present Active Set for 'Standalone signalling connection' for the best cell in the active set.

pmNoFailOutIratHoStandaloneUeRejection

Number of failed outgoing (to GSM) inter-RAT handover, rejected by UE, for 'Standalone signalling connection' for the best cell in the active set.

pmNoFailOutSbHoSpeechGsmFailure

Number of failed outgoing Service Based GSM Handover due to GSM resource allocation failure, for 'Conversational speech RAB' for the best cell in the active set.

Source Field

pmNoFailOutSbHoSpeechGsmFailure

Source Section

GsmRelation

pmNoFailOutSbHoSpeechReturnOldChNotPhyChFail

Number of failed outgoing Service Based GSM Handover due to reasons other than physical channel failure, where the UE returns to the present Active Set for 'Conversational speech RAB' for the best cell in the active set.

Source Field

pmNoFailOutSbHoSpeechReturnOldChNotPhyChFail

Source Section

GsmRelation

pmNoFailOutSbHoSpeechReturnOldChPhyChFail

Number of failed outgoing Service Based GSM Handover due to physical channel failure, where the UE returns to the present Active Set for 'Conversational speech RAB' for the best cell in the active set.

Source Field

pmNoFailOutSbHoSpeechReturnOldChPhyChFail

Source Section

GsmRelation

pmNoFailOutSbHoSpeechUeRejection

Number of failed outgoing Service Based GSM Handover, rejected by UE, for 'Conversational speech RAB' for the best cell in the active set.

Source Field

pmNoFailOutSbHoSpeechUeRejection

Source Section

GsmRelation

pmNoOutIratCcAtt

Total number of the PS Inter-RATCC attempts on DCH

Data Source

NodeB_RNC_RXI

Source Field

pmNoOutIratCcAtt

Source Section

GsmRelation

pmNoOutIratCcAttEul

Number of PS IRAT cell change attempts for a UE on dedicated channels, with RB/RBs mapped on EUL in the uplink. Incremented in the relation between the best cell in the active set and the target cell. If the best cell in the active set has no cell relation towards the target cell, the cell change will not be counted in this RNC.

Data Source

RNC

Source Field

pmNoOutIratCcAttEul

Source Section

GsmRelation

pmNoOutIratCcAttHs

Number of PS IRAT cell change attempts for a UE on dedicated channels, with RB/RBs mapped on HSDPA in the downlink. Incremented in the relation between the best cell in the active set and the target cell. If the best cell in the active set has no cell relation towards the target cell, the cell change will not be counted in this RNC.

Data Source

RNC

Source Field

pmNoOutIratCcAttHs

Source Section

GsmRelation

pmNoOutIratCcReturnOldCh

Total number of the PS Inter-RATCC attempts for UE on DCH where the UE returns to old channel

Data Source

NodeB_RNC_RXI

Source Field

pmNoOutIratCcReturnOldCh

Source Section

GsmRelation

pmNoOutIratCcReturnOldChEul

Number of PS IRAT cell change attempts for a UE on dedicated channels, with RB/RBs mapped on EUL in the uplink, where the UE returns to the old channel. Incremented in the relation between the best cell in the active set and the target cell. If the best cell in the active set has no cell relation towards the target cell, the cell change will not be counted in this RNC.

Data Source

RNC

Source Field

pmNoOutIratCcReturnOldChEul

Source Section

GsmRelation

pmNoOutIratCcReturnOldChHs

Number of PS IRAT cell change attempts for a UE on dedicated channels, with RB/RBs mapped on HSDPA in the downlink, where the UE returns to the old channel. Incremented in the relation between the best cell in the active set and the target cell. If the best cell in the active set has no cell relation towards the target cell, the cell change will not be counted in this RNC.

Data Source

RNC

Source Field

pmNoOutIratCcReturnOldChHs

Source Section

GsmRelation

pmNoOutIratCcSuccess

Number of successful PS Inter RAT cell change attempts for UE on dedicated channel. The counter is triggered by CN Iu Release Command following the sending of the CELL CHANGE ORDER FROM UTRAN message.

Data Source

RNC

Source Field

pmNoOutIratCcSuccess

Source Section

GsmRelation

pmNoOutIratCcSuccessEul

Number of successful PS IRAT cell change attempts for a UE on dedicated channels, with RB/RBs mapped on EUL in the uplink. Incremented in the relation between the best cell in the active set and the target cell. If the best cell in the active set has no cell relation towards the target cell, the cell change will not be counted in this RNC.

Data Source

RNC

Source Field

pmNoOutIratCcSuccessEul

Source Section

GsmRelation

pmNoOutIratCcSuccessHs

Number of successful PS IRAT cell change attempts for a UE on dedicated channels, with RB/RBs mapped on HSDPA in the downlink. Incremented in the relation between the best cell in the active set and the target cell. If the best cell in the active set has no cell relation towards the target cell, the cell change will not be counted in this RNC.

Data Source

RNC

Source Field

pmNoOutIratCcSuccessHs

Source Section

GsmRelation

pmNoSuccessOutIratHoCs57

Number of successful outgoing (to GSM) inter-RAT handover for 'streaming 57.6 kbps CS RAB' for the best cell in the active set.

pmNoSuccessOutIratHoMulti

Number of attempted outgoing (to GSM) inter-RAT handover for 'multi RAB' for the best cell in the active set.

pmNoSuccessOutIratHoSpeech

Number of successful outgoing (to GSM) inter-RAT handover for 'Conversational speech RAB' for the best cell in the active set.

pmNoSuccessOutIratHoStandalone

Number of attempted outgoing (to GSM) inter-RAT handover for 'Standalone signalling connection' for the best cell in the active set.

pmNoSuccessOutSbHoSpeech

Number of successful outgoing Service Based GSM Handover for 'Conversational speech RAB' for the best cell in the active set.

Data Source

RNC

Source Field

pmNoSuccessOutSbHoSpeech

Source Section

GsmRelation

pmSuccLbhoSpeech

Number of successful outgoing (to GSM) load-based handovers. Incremented in the relation between the best cell in the active set and the target cell. If the best cell in the active set has no cell relation towards the target cell, the handover will not be counted in this RNC.

Data Source

RNC

Source Field

pmSuccLbhoSpeech

Source Section

GsmRelation

priority

Priority for GSM handover

Data Source

Bulk CM

Source Field

lu:priority

Source Section

GsmRelation

qOffset1sn

Signal stength offset between source and target cells. Used when the IE cell_selection_and_reselection_quality_measure in SIB 11/12 is set to "CPICH RSCP". { long, Range = -50..50, Default=7 }

Data Source

Bulk CM

Source Section

GsmRelation

rac

Routing Area Code, RAC (Ref. 3GPP TS 23.003)

Data Source

Bulk CM

Source Field

gn:rac

Source Section

ExternalGsmCell

racc

Routing Area Colour Code, RACC. Ref 3GPP TS 44.018 [4].

Data Source

Bulk CM

Source Field

gn:racc

Source Section

ExternalGsmCell

userLabel

A user-friendly (and user assigned) name of the associated object.

Data Source

Bulk CM

Source Field

gn:userLabel

Source Section

ExternalGsmCell

GttService Primitive Calculations

The following is a list of primitive calculations for the GttService entity.

GRAPHmultiLineSeparator

Special Control Field for Multi-Line Graphs

Calculation

```
""
```

NUMDAYS

of days in Report

Calculation

```
DAYSINREPORT()
```

NUMHOURS

of hours in Summation Data

Calculation

p_Seizures_Sucess_Rate

Percentege of Seizures which are sucessful

Calculation

```
100.0 * vsum( pmTotalSeizures, -1 * pmUnsuccSeizures ) / pmTotalSeizures
```

GttService Peg Counts

The following is a list of peg counts for the GttService entity.

PERLENSEC

Period length in seconds

Data Source

RNC_RXI

Source Field

PERLENSEC

Source Section

GttService_Gen

pmForcedRelease

The total number of forced device releases.

Data Source

RNC_RXI

Source Field

pmForcedRelease

Source Section

GttService

pmNormalRelease

The total number of normal device releases.

Data Source

RNC_RXI

Source Field

pmNormalRelease

Source Section

GttService

pmTotalSeizures

The total number of seizure attempt of devices from this device Service.

Data Source

RNC_RXI

Source Field

pmTotalSeizures

Source Section

GttService

pmUnsuccSeizures

The total number of failed seizure attempts due to congestion.

Data Source

RNC_RXI

Source Field

pmUnsuccSeizures

Source Section

GttService

RNC_RELEASE

Release

Data Source

RNC_RXI

Source Field

RNC_RELEASE

HsDschResources Primitive Calculations

The following is a list of primitive calculations for the HsDschResources entity.

GRAPHmultiLineSeparator

Special Control Field for Multi-Line Graphs

Calculation

```
""
```

NUMDAYS

of days in Report

Calculation

```
DAYSINREPORT()
```

NUMHOURS

of hours in Summation Data

Calculation

pmTransmCarrierPowerNonHsP5MD_01

(Retired on Utran P6)The distribution of transmitted carrier power for all codes not used for High-Speed Physical Downlink Shared Channel (HS-PDSCH) or HS-SCCH transmission in the range 25 .. 25.5 dBm

Calculation

```
pmTransmittedCarrierPowerNonHs_051
```

pmTransmCarrierPowerNonHsP5MD_02

(Retired on Utran P6)The distribution of transmitted carrier power for all codes not used for High-Speed Physical Downlink Shared Channel (HS-PDSCH) or HS-SCCH transmission in the range 25.5 .. 26 dBm

Calculation

```
pmTransmittedCarrierPowerNonHs_052
```

pmTransmCarrierPowerNonHsP5MD_03

(Retired on Utran P6)The distribution of transmitted carrier power for all codes not used for High-Speed Physical Downlink Shared Channel (HS-PDSCH) or HS-SCCH transmission in the range 26 .. 26.5 dBm

Calculation

```
pmTransmittedCarrierPowerNonHs_053
```

pmTransmCarrierPowerNonHsP5MD_04

(Retired on Utran P6)The distribution of transmitted carrier power for all codes not used for High-Speed Physical Downlink Shared Channel (HS-PDSCH) or HS-SCCH transmission in the range 26.5 .. 27 dBm

Calculation

```
pmTransmittedCarrierPowerNonHs_054
```

pmTransmCarrierPowerNonHsP5MD_05

(Retired on Utran P6)The distribution of transmitted carrier power for all codes not used for High-Speed Physical Downlink Shared Channel (HS-PDSCH) or HS-SCCH transmission in the range 27 .. 27.5 dBm

Calculation

```
pmTransmittedCarrierPowerNonHs_055
```

pmTransmCarrierPowerNonHsP5MD_06

(Retired on Utran P6)The distribution of transmitted carrier power for all codes not used for High-Speed Physical Downlink Shared Channel (HS-PDSCH) or HS-SCCH transmission in the range 27.5 .. 28 dBm

Calculation

```
pmTransmittedCarrierPowerNonHs_056
```

pmTransmCarrierPowerNonHsP5MD_07

(Retired on Utran P6)The distribution of transmitted carrier power for all codes not used for High-Speed Physical Downlink Shared Channel (HS-PDSCH) or HS-SCCH transmission in the range 28 .. 28.5 dBm

Calculation

```
pmTransmittedCarrierPowerNonHs_057
```

pmTransmCarrierPowerNonHsP5MD_08

(Retired on Utran P6)The distribution of transmitted carrier power for all codes not used for High-Speed Physical Downlink Shared Channel (HS-PDSCH) or HS-SCCH transmission in the range 28.5 .. 29 dBm

Calculation

```
pmTransmittedCarrierPowerNonHs_058
```

pmTransmCarrierPowerNonHsP5MD_09

(Retired on Utran P6)The distribution of transmitted carrier power for all codes not used for High-Speed Physical Downlink Shared Channel (HS-PDSCH) or HS-SCCH transmission in the range 29 .. 29.5 dBm

Calculation

```
pmTransmittedCarrierPowerNonHs_059
```

pmTransmCarrierPowerNonHsP5MD_10

(Retired on Utran P6)The distribution of transmitted carrier power for all codes not used for High-Speed Physical Downlink Shared Channel (HS-PDSCH) or HS-SCCH transmission in the range 29.5 .. 30 dBm

Calculation

```
pmTransmittedCarrierPowerNonHs_060
```

pmTransmCarrierPowerNonHsP5MD_11

(Retired on Utran P6)The distribution of transmitted carrier power for all codes not used for High-Speed Physical Downlink Shared Channel (HS-PDSCH) or HS-SCCH transmission in the range 30 .. 30.5 dBm

Calculation

`pmTransmittedCarrierPowerNonHs_061`

pmTransmCarrierPowerNonHsP5MD_12

(Retired on Utran P6)The distribution of transmitted carrier power for all codes not used for High-Speed Physical Downlink Shared Channel (HS-PDSCH) or HS-SCCH transmission in the range 30.5 .. 31 dBm

Calculation

`pmTransmittedCarrierPowerNonHs_062`

pmTransmCarrierPowerNonHsP5MD_13

(Retired on Utran P6)The distribution of transmitted carrier power for all codes not used for High-Speed Physical Downlink Shared Channel (HS-PDSCH) or HS-SCCH transmission in the range 31 .. 31.5 dBm

Calculation

`pmTransmittedCarrierPowerNonHs_063`

pmTransmCarrierPowerNonHsP5MD_14

(Retired on Utran P6)The distribution of transmitted carrier power for all codes not used for High-Speed Physical Downlink Shared Channel (HS-PDSCH) or HS-SCCH transmission in the range 31.5 .. 32 dBm

Calculation

`pmTransmittedCarrierPowerNonHs_064`

pmTransmCarrierPowerNonHsP5MD_15

(Retired on Utran P6)The distribution of transmitted carrier power for all codes not used for High-Speed Physical Downlink Shared Channel (HS-PDSCH) or HS-SCCH transmission in the range 32 .. 32.5 dBm

Calculation

`pmTransmittedCarrierPowerNonHs_065`

pmTransmCarrierPowerNonHsP5MD_16

(Retired on Utran P6)The distribution of transmitted carrier power for all codes not used for High-Speed Physical Downlink Shared Channel (HS-PDSCH) or HS-SCCH transmission in the range 32.5 .. 33 dBm

Calculation

`pmTransmittedCarrierPowerNonHs_066`

pmTransmCarrierPowerNonHsP5MD_17

(Retired on Utran P6)The distribution of transmitted carrier power for all codes not used for High-Speed Physical Downlink Shared Channel (HS-PDSCH) or HS-SCCH transmission in the range 33 .. 33.5 dBm

Calculation

`pmTransmittedCarrierPowerNonHs_067`

pmTransmCarrierPowerNonHsP5MD_18

(Retired on Utran P6)The distribution of transmitted carrier power for all codes not used for High-Speed Physical Downlink Shared Channel (HS-PDSCH) or HS-SCCH transmission in the range 33.5 .. 34 dBm

Calculation

`pmTransmittedCarrierPowerNonHs_068`

pmTransmCarrierPowerNonHsP5MD_19

(Retired on Utran P6)The distribution of transmitted carrier power for all codes not used for High-Speed Physical Downlink Shared Channel (HS-PDSCH) or HS-SCCH transmission in the range 34 .. 34.5 dBm

Calculation

`pmTransmittedCarrierPowerNonHs_069`

pmTransmCarrierPowerNonHsP5MD_20

(Retired on Utran P6)The distribution of transmitted carrier power for all codes not used for High-Speed Physical Downlink Shared Channel (HS-PDSCH) or HS-SCCH transmission in the range 34.5 .. 35 dBm

Calculation

`pmTransmittedCarrierPowerNonHs_070`

pmTransmCarrierPowerNonHsP5MD_21

(Retired on Utran P6)The distribution of transmitted carrier power for all codes not used for High-Speed Physical Downlink Shared Channel (HS-PDSCH) or HS-SCCH transmission in the range 35 .. 35.5 dBm

Calculation

```
pmTransmittedCarrierPowerNonHs_071
```

pmTransmCarrierPowerNonHsP5MD_22

(Retired on Utran P6)The distribution of transmitted carrier power for all codes not used for High-Speed Physical Downlink Shared Channel (HS-PDSCH) or HS-SCCH transmission in the range 35.5 .. 36 dBm

Calculation

```
pmTransmittedCarrierPowerNonHs_072
```

pmTransmCarrierPowerNonHsP5MD_23

(Retired on Utran P6)The distribution of transmitted carrier power for all codes not used for High-Speed Physical Downlink Shared Channel (HS-PDSCH) or HS-SCCH transmission in the range 36 .. 36.5 dBm

Calculation

```
pmTransmittedCarrierPowerNonHs_073
```

pmTransmCarrierPowerNonHsP5MD_24

(Retired on Utran P6)The distribution of transmitted carrier power for all codes not used for High-Speed Physical Downlink Shared Channel (HS-PDSCH) or HS-SCCH transmission in the range 36.5 .. 37 dBm

Calculation

```
pmTransmittedCarrierPowerNonHs_074
```

pmTransmCarrierPowerNonHsP5MD_25

(Retired on Utran P6)The distribution of transmitted carrier power for all codes not used for High-Speed Physical Downlink Shared Channel (HS-PDSCH) or HS-SCCH transmission in the range 37 .. 37.5 dBm

Calculation

```
pmTransmittedCarrierPowerNonHs_075
```

pmTransmCarrierPowerNonHsP5MD_26

(Retired on Utran P6)The distribution of transmitted carrier power for all codes not used for High-Speed Physical Downlink Shared Channel (HS-PDSCH) or HS-SCCH transmission in the range 37.5 .. 38 dBm

Calculation

```
pmTransmittedCarrierPowerNonHs_076
```

pmTransmCarrierPowerNonHsP5MD_27

(Retired on Utran P6)The distribution of transmitted carrier power for all codes not used for High-Speed Physical Downlink Shared Channel (HS-PDSCH) or HS-SCCH transmission in the range 38 .. 38.5 dBm

Calculation

```
pmTransmittedCarrierPowerNonHs_077
```

pmTransmCarrierPowerNonHsP5MD_28

(Retired on Utran P6)The distribution of transmitted carrier power for all codes not used for High-Speed Physical Downlink Shared Channel (HS-PDSCH) or HS-SCCH transmission in the range 38.5 .. 39 dBm

Calculation

```
pmTransmittedCarrierPowerNonHs_078
```

pmTransmCarrierPowerNonHsP5MD_29

(Retired on Utran P6)The distribution of transmitted carrier power for all codes not used for High-Speed Physical Downlink Shared Channel (HS-PDSCH) or HS-SCCH transmission in the range 39 .. 39.5 dBm

Calculation

```
pmTransmittedCarrierPowerNonHs_079
```

pmTransmCarrierPowerNonHsP5MD_30

(Retired on Utran P6)The distribution of transmitted carrier power for all codes not used for High-Speed Physical Downlink Shared Channel (HS-PDSCH) or HS-SCCH transmission in the range 39.5 .. 40 dBm

Calculation

```
pmTransmittedCarrierPowerNonHs_080
```

pmTransmCarrierPowerNonHsP5MD_31

(Retired on Utran P6)The distribution of transmitted carrier power for all codes not used for High-Speed Physical Downlink Shared Channel (HS-PDSCH) or HS-SCCH transmission in the range 40 .. 40.5 dBm

Calculation

```
pmTransmittedCarrierPowerNonHs_081
```

pmTransmCarrierPowerNonHsP5MD_32

(Retired on Utran P6)The distribution of transmitted carrier power for all codes not used for High-Speed Physical Downlink Shared Channel (HS-PDSCH) or HS-SCCH transmission in the range 40.5 .. 41 dBm

Calculation

```
pmTransmittedCarrierPowerNonHs_082
```

pmTransmCarrierPowerNonHsP5MD_33

(Retired on Utran P6)The distribution of transmitted carrier power for all codes not used for High-Speed Physical Downlink Shared Channel (HS-PDSCH) or HS-SCCH transmission in the range 41 .. 41.5 dBm

Calculation

```
pmTransmittedCarrierPowerNonHs_083
```

pmTransmCarrierPowerNonHsP5MD_34

(Retired on Utran P6)The distribution of transmitted carrier power for all codes not used for High-Speed Physical Downlink Shared Channel (HS-PDSCH) or HS-SCCH transmission in the range 41.5 .. 42 dBm

Calculation

```
pmTransmittedCarrierPowerNonHs_084
```

pmTransmCarrierPowerNonHsP5MD_35

(Retired on Utran P6)The distribution of transmitted carrier power for all codes not used for High-Speed Physical Downlink Shared Channel (HS-PDSCH) or HS-SCCH transmission in the range 42 .. 42.5 dBm

Calculation

```
pmTransmittedCarrierPowerNonHs_085
```

pmTransmCarrierPowerNonHsP5MD_36

(Retired on Utran P6)The distribution of transmitted carrier power for all codes not used for High-Speed Physical Downlink Shared Channel (HS-PDSCH) or HS-SCCH transmission in the range 42.5 .. 43 dBm

Calculation

```
pmTransmittedCarrierPowerNonHs_086
```

pmTransmCarrierPowerNonHsP5MD_37

(Retired on Utran P6)The distribution of transmitted carrier power for all codes not used for High-Speed Physical Downlink Shared Channel (HS-PDSCH) or HS-SCCH transmission in the range 43 .. 43.5 dBm

Calculation

```
pmTransmittedCarrierPowerNonHs_087
```

pmTransmCarrierPowerNonHsP5MD_38

(Retired on Utran P6)The distribution of transmitted carrier power for all codes not used for High-Speed Physical Downlink Shared Channel (HS-PDSCH) or HS-SCCH transmission in the range 43.5 .. 44 dBm

Calculation

```
pmTransmittedCarrierPowerNonHs_088
```

pmTransmCarrierPowerNonHsP5MD_39

(Retired on Utran P6)The distribution of transmitted carrier power for all codes not used for High-Speed Physical Downlink Shared Channel (HS-PDSCH) or HS-SCCH transmission in the range 44 .. 44.5 dBm

Calculation

```
pmTransmittedCarrierPowerNonHs_089
```

pmTransmCarrierPowerNonHsP5MD_40

(Retired on Utran P6)The distribution of transmitted carrier power for all codes not used for High-Speed Physical Downlink Shared Channel (HS-PDSCH) or HS-SCCH transmission in the range 44.5 .. 45 dBm

Calculation

```
pmTransmittedCarrierPowerNonHs_090
```

pmTransmCarrierPowerNonHsP5MD_41

(Retired on Utran P6)The distribution of transmitted carrier power for all codes not used for High-Speed Physical Downlink Shared Channel (HS-PDSCH) or HS-SCCH transmission in the range 45 .. 45.5 dBm

Calculation

```
pmTransmittedCarrierPowerNonHs_091
```

pmTransmCarrierPowerNonHsP5MD_42

(Retired on Utran P6)The distribution of transmitted carrier power for all codes not used for High-Speed Physical Downlink Shared Channel (HS-PDSCH) or HS-SCCH transmission in the range 45.5 .. 46 dBm

Calculation

```
pmTransmittedCarrierPowerNonHs_092
```

pmTransmCarrierPowerNonHsP5MD_43

(Retired on Utran P6)The distribution of transmitted carrier power for all codes not used for High-Speed Physical Downlink Shared Channel (HS-PDSCH) or HS-SCCH transmission in the range 46 .. 46.5 dBm

Calculation

```
pmTransmittedCarrierPowerNonHs_093
```

pmTransmCarrierPowerNonHsP5MD_44

(Retired on Utran P6)The distribution of transmitted carrier power for all codes not used for High-Speed Physical Downlink Shared Channel (HS-PDSCH) or HS-SCCH transmission in the range 46.5 .. 47 dBm

Calculation

```
pmTransmittedCarrierPowerNonHs_094
```

pmTransmCarrierPowerNonHsP5MD_45

(Retired on Utran P6)The distribution of transmitted carrier power for all codes not used for High-Speed Physical Downlink Shared Channel (HS-PDSCH) or HS-SCCH transmission in the range 47 .. 47.5 dBm

Calculation

```
pmTransmittedCarrierPowerNonHs_095
```

pmTransmCarrierPowerNonHsP5MD_46

(Retired on Utran P6)The distribution of transmitted carrier power for all codes not used for High-Speed Physical Downlink Shared Channel (HS-PDSCH) or HS-SCCH transmission in the range 47.5 .. 48 dBm

Calculation

```
pmTransmittedCarrierPowerNonHs_096
```

pmTransmCarrierPowerNonHsP5MD_47

(Retired on Utran P6)The distribution of transmitted carrier power for all codes not used for High-Speed Physical Downlink Shared Channel (HS-PDSCH) or HS-SCCH transmission in the range 48 .. 48.5 dBm

Calculation

```
pmTransmittedCarrierPowerNonHs_097
```

pmTransmCarrierPowerNonHsP5MD_48

(Retired on Utran P6)The distribution of transmitted carrier power for all codes not used for High-Speed Physical Downlink Shared Channel (HS-PDSCH) or HS-SCCH transmission in the range 48.5 .. 49 dBm

Calculation

```
pmTransmittedCarrierPowerNonHs_098
```

pmTransmCarrierPowerNonHsP5MD_49

(Retired on Utran P6)The distribution of transmitted carrier power for all codes not used for High-Speed Physical Downlink Shared Channel (HS-PDSCH) or HS-SCCH transmission in the range 49 .. 49.5 dBm

Calculation

```
pmTransmittedCarrierPowerNonHs_099
```

pmTransmCarrierPowerNonHsP5MD_50

(Retired on Utran P6)The distribution of transmitted carrier power for all codes not used for High-Speed Physical Downlink Shared Channel (HS-PDSCH) or HS-SCCH transmission in the range 49.5 .. 50 dBm

Calculation

```
pmTransmittedCarrierPowerNonHs_100
```

HsDschResources Peg Counts

The following is a list of peg counts for the HsDschResources entity.

NodeB_RELEASE

Release

Data Source

NodeB

Source Section

HsDschResources

PERLENSEC

Period Length

Data Source

NodeB

Source Field

perlensec

Source Section

HsDschResources_WMGeneral

PERLENSEC_K

Period length in seconds aggregation summation in time domain and aggregation maximum between Network Elements.

Data Source

NodeB

Source Field

perlensec

Source Section

HsDschResources_WMGeneral

pmAck16Qam_01

Number of received ACKs for a specified transport block size with 16 Quadrature Amplitude Modulation (QAM). The number of successful Hybrid Automatic Repetition Request (HARQ) transmissions are counted on the Media Access Control high-speed (MAC-hs) layer

Data Source

NodeB

Source Field

pmAck16Qam

Source Section

HsDschResources

pmAck16Qam_02

Number of received ACKs for a specified transport block size with 16 Quadrature Amplitude Modulation (QAM). The number of successful Hybrid Automatic Repetition Request (HARQ) transmissions are counted on the Media Access Control high-speed (MAC-hs) layer

Data Source

NodeB

Source Field

pmAck16Qam

Source Section

HsDschResources

pmAck16Qam_03

Number of received ACKs for a specified transport block size with 16 Quadrature Amplitude Modulation (QAM). The number of successful Hybrid Automatic Repetition Request (HARQ) transmissions are counted on the Media Access Control high-speed (MAC-hs) layer

Data Source

NodeB

Source Field

pmAck16Qam

Source Section

HsDschResources

pmAck16Qam_04

Number of received ACKs for a specified transport block size with 16 Quadrature Amplitude Modulation (QAM). The number of successful Hybrid Automatic Repetition Request (HARQ) transmissions are counted on the Media Access Control high-speed (MAC-hs) layer

Data Source

NodeB

Source Field

pmAck16Qam

Source Section

HsDschResources

pmAck16Qam_05

Number of received ACKs for a specified transport block size with 16 Quadrature Amplitude Modulation (QAM). The number of successful Hybrid Automatic Repetition Request (HARQ) transmissions are counted on the Media Access Control high-speed (MAC-hs) layer

Data Source

NodeB

Source Field

pmAck16Qam

Source Section

HsDschResources

pmAck16Qam_06

Number of received ACKs for a specified transport block size with 16 Quadrature Amplitude Modulation (QAM). The number of successful Hybrid Automatic Repetition Request (HARQ) transmissions are counted on the Media Access Control high-speed (MAC-hs) layer

Data Source

NodeB

Source Field

pmAck16Qam

Source Section

HsDschResources

pmAck16Qam_07

Number of received ACKs for a specified transport block size with 16 Quadrature Amplitude Modulation (QAM). The number of successful Hybrid Automatic Repetition Request (HARQ) transmissions are counted on the Media Access Control high-speed (MAC-hs) layer

Data Source

NodeB

Source Field

pmAck16Qam

Source Section

HsDschResources

pmAck16Qam_08

Number of received ACKs for a specified transport block size with 16 Quadrature Amplitude Modulation (QAM). The number of successful Hybrid Automatic Repetition Request (HARQ) transmissions are counted on the Media Access Control high-speed (MAC-hs) layer

Data Source

NodeB

Source Field

pmAck16Qam

Source Section

HsDschResources

pmAck16Qam_09

Number of received ACKs for a specified transport block size with 16 Quadrature Amplitude Modulation (QAM). The number of successful Hybrid Automatic Repetition Request (HARQ) transmissions are counted on the Media Access Control high-speed (MAC-hs) layer

Data Source

NodeB

Source Field

pmAck16Qam

Source Section

HsDschResources

pmAck16Qam_10

Number of received ACKs for a specified transport block size with 16 Quadrature Amplitude Modulation (QAM). The number of successful Hybrid Automatic Repetition Request (HARQ) transmissions are counted on the Media Access Control high-speed (MAC-hs) layer

Data Source

NodeB

Source Field

pmAck16Qam

Source Section

HsDschResources

pmAck16Qam_11

Number of received ACKs for a specified transport block size with 16 Quadrature Amplitude Modulation (QAM). The number of successful Hybrid Automatic Repetition Request (HARQ) transmissions are counted on the Media Access Control high-speed (MAC-hs) layer

Data Source

NodeB

Source Field

pmAck16Qam

Source Section

HsDschResources

pmAck16Qam_12

Number of received ACKs for a specified transport block size with 16 Quadrature Amplitude Modulation (QAM). The number of successful Hybrid Automatic Repetition Request (HARQ) transmissions are counted on the Media Access Control high-speed (MAC-hs) layer

Data Source

NodeB

Source Field

pmAck16Qam

Source Section

HsDschResources

pmAck16Qam_13

Number of received ACKs for a specified transport block size with 16 Quadrature Amplitude Modulation (QAM). The number of successful Hybrid Automatic Repetition Request (HARQ) transmissions are counted on the Media Access Control high-speed (MAC-hs) layer

Data Source

NodeB

Source Field

pmAck16Qam

Source Section

HsDschResources

pmAck16Qam_14

Number of received ACKs for a specified transport block size with 16 Quadrature Amplitude Modulation (QAM). The number of successful Hybrid Automatic Repetition Request (HARQ) transmissions are counted on the Media Access Control high-speed (MAC-hs) layer

Data Source

NodeB

Source Field

pmAck16Qam

Source Section

HsDschResources

pmAck16Qam_15

Number of received ACKs for a specified transport block size with 16 Quadrature Amplitude Modulation (QAM). The number of successful Hybrid Automatic Repetition Request (HARQ) transmissions are counted on the Media Access Control high-speed (MAC-hs) layer

Data Source

NodeB

Source Field

pmAck16Qam

Source Section

HsDschResources

pmAck16Qam_16

Number of received ACKs for a specified transport block size with 16 Quadrature Amplitude Modulation (QAM). The number of successful Hybrid Automatic Repetition Request (HARQ) transmissions are counted on the Media Access Control high-speed (MAC-hs) layer

Data Source

NodeB

Source Field

pmAck16Qam

Source Section

HsDschResources

pmAck16Qam_17

Number of received ACKs for a specified transport block size with 16 Quadrature Amplitude Modulation (QAM). The number of successful Hybrid Automatic Repetition Request (HARQ) transmissions are counted on the Media Access Control high-speed (MAC-hs) layer

Data Source

NodeB

Source Field

pmAck16Qam

Source Section

HsDschResources

pmAck16Qam_18

Number of received ACKs for a specified transport block size with 16 Quadrature Amplitude Modulation (QAM). The number of successful Hybrid Automatic Repetition Request (HARQ) transmissions are counted on the Media Access Control high-speed (MAC-hs) layer

Data Source

NodeB

Source Field

pmAck16Qam

Source Section

HsDschResources

pmAck16Qam_19

Number of received ACKs for a specified transport block size with 16 Quadrature Amplitude Modulation (QAM). The number of successful Hybrid Automatic Repetition Request (HARQ) transmissions are counted on the Media Access Control high-speed (MAC-hs) layer

Data Source

NodeB

Source Field

pmAck16Qam

Source Section

HsDschResources

pmAck16Qam_20

Number of received ACKs for a specified transport block size with 16 Quadrature Amplitude Modulation (QAM). The number of successful Hybrid Automatic Repetition Request (HARQ) transmissions are counted on the Media Access Control high-speed (MAC-hs) layer

Data Source

NodeB

Source Field

pmAck16Qam

Source Section

HsDschResources

pmAck16Qam_21

Number of received ACKs for a specified transport block size with 16 Quadrature Amplitude Modulation (QAM). The number of successful Hybrid Automatic Repetition Request (HARQ) transmissions are counted on the Media Access Control high-speed (MAC-hs) layer

Data Source

NodeB

Source Field

pmAck16Qam

Source Section

HsDschResources

pmAck16Qam_22

Number of received ACKs for a specified transport block size with 16 Quadrature Amplitude Modulation (QAM). The number of successful Hybrid Automatic Repetition Request (HARQ) transmissions are counted on the Media Access Control high-speed (MAC-hs) layer

Data Source

NodeB

Source Field

pmAck16Qam

Source Section

HsDschResources

pmAck16Qam_23

Number of received ACKs for a specified transport block size with 16 Quadrature Amplitude Modulation (QAM). The number of successful Hybrid Automatic Repetition Request (HARQ) transmissions are counted on the Media Access Control high-speed (MAC-hs) layer

Data Source

NodeB

Source Field

pmAck16Qam

Source Section

HsDschResources

pmAck16Qam_24

Number of received ACKs for a specified transport block size with 16 Quadrature Amplitude Modulation (QAM). The number of successful Hybrid Automatic Repetition Request (HARQ) transmissions are counted on the Media Access Control high-speed (MAC-hs) layer

Data Source

NodeB

Source Field

pmAck16Qam

Source Section

HsDschResources

pmAck16Qam_25

Number of received ACKs for a specified transport block size with 16 Quadrature Amplitude Modulation (QAM). The number of successful Hybrid Automatic Repetition Request (HARQ) transmissions are counted on the Media Access Control high-speed (MAC-hs) layer

Data Source

NodeB

Source Field

pmAck16Qam

Source Section

HsDschResources

pmAck16Qam_26

Number of received ACKs for a specified transport block size with 16 Quadrature Amplitude Modulation (QAM). The number of successful Hybrid Automatic Repetition Request (HARQ) transmissions are counted on the Media Access Control high-speed (MAC-hs) layer

Data Source

NodeB

Source Field

pmAck16Qam

Source Section

HsDschResources

pmAck16Qam_27

Number of received ACKs for a specified transport block size with 16 Quadrature Amplitude Modulation (QAM). The number of successful Hybrid Automatic Repetition Request (HARQ) transmissions are counted on the Media Access Control high-speed (MAC-hs) layer

Data Source

NodeB

Source Field

pmAck16Qam

Source Section

HsDschResources

pmAck16Qam_28

Number of received ACKs for a specified transport block size with 16 Quadrature Amplitude Modulation (QAM). The number of successful Hybrid Automatic Repetition Request (HARQ) transmissions are counted on the Media Access Control high-speed (MAC-hs) layer

Data Source

NodeB

Source Field

pmAck16Qam

Source Section

HsDschResources

pmAck16Qam_29

Number of received ACKs for a specified transport block size with 16 Quadrature Amplitude Modulation (QAM). The number of successful Hybrid Automatic Repetition Request (HARQ) transmissions are counted on the Media Access Control high-speed (MAC-hs) layer

Data Source

NodeB

Source Field

pmAck16Qam

Source Section

HsDschResources

pmAck16Qam_30

Number of received ACKs for a specified transport block size with 16 Quadrature Amplitude Modulation (QAM). The number of successful Hybrid Automatic Repetition Request (HARQ) transmissions are counted on the Media Access Control high-speed (MAC-hs) layer

Data Source

NodeB

Source Field

pmAck16Qam

Source Section

HsDschResources

pmAck64Qam_00

Counting the number of received ACKs for a specified transport block size (TBS) with 64QAM. The number of successful HARQ transmissions are counted of the MAC-hs layer. Range: number of ACKs for transport block with size 0..1000

Data Source

NodeB

Source Field

pmAck64Qam

Source Section

HsDschResources

pmAck64Qam_01

Counting the number of received ACKs for a specified transport block size (TBS) with 64QAM. The number of successful HARQ transmissions are counted of the MAC-hs layer. Range: number of ACKs for transport block with size 1001..2000

Data Source

NodeB

Source Field

pmAck64Qam

Source Section

HsDschResources

pmAck64Qam_02

Counting the number of received ACKs for a specified transport block size (TBS) with 64QAM. The number of successful HARQ transmissions are counted of the MAC-hs layer. Range: number of ACKs for transport block with size 2001..3000

Data Source

NodeB

Source Field

pmAck64Qam

Source Section

HsDschResources

pmAck64Qam_03

Counting the number of received ACKs for a specified transport block size (TBS) with 64QAM. The number of successful HARQ transmissions are counted of the MAC-hs layer. Range: number of ACKs for transport block with size 3001..4000

Data Source

NodeB

Source Field

pmAck64Qam

Source Section

HsDschResources

pmAck64Qam_04

Counting the number of received ACKs for a specified transport block size (TBS) with 64QAM. The number of successful HARQ transmissions are counted of the MAC-hs layer. Range: number of ACKs for transport block with size 4001..5000

Data Source

NodeB

Source Field

pmAck64Qam

Source Section

HsDschResources

pmAck64Qam_05

Counting the number of received ACKs for a specified transport block size (TBS) with 64QAM. The number of successful HARQ transmissions are counted of the MAC-hs layer. Range: number of ACKs for transport block with size 5001..6000

Data Source

NodeB

Source Field

pmAck64Qam

Source Section

HsDschResources

pmAck64Qam_06

Counting the number of received ACKs for a specified transport block size (TBS) with 64QAM. The number of successful HARQ transmissions are counted of the MAC-hs layer. Range: number of ACKs for transport block with size 6001..7000

Data Source

NodeB

Source Field

pmAck64Qam

Source Section

HsDschResources

pmAck64Qam_07

Counting the number of received ACKs for a specified transport block size (TBS) with 64QAM. The number of successful HARQ transmissions are counted of the MAC-hs layer. Range: number of ACKs for transport block with size 7001..8000

Data Source

NodeB

Source Field

pmAck64Qam

Source Section

HsDschResources

pmAck64Qam_08

Counting the number of received ACKs for a specified transport block size (TBS) with 64QAM. The number of successful HARQ transmissions are counted of the MAC-hs layer. Range: number of ACKs for transport block with size 8001..9000

Data Source

NodeB

Source Field

pmAck64Qam

Source Section

HsDschResources

pmAck64Qam_09

Counting the number of received ACKs for a specified transport block size (TBS) with 64QAM. The number of successful HARQ transmissions are counted of the MAC-hs layer. Range: number of ACKs for transport block with size 9001..10000

Data Source

NodeB

Source Field

pmAck64Qam

Source Section

HsDschResources

pmAck64Qam_10

Counting the number of received ACKs for a specified transport block size (TBS) with 64QAM. The number of successful HARQ transmissions are counted of the MAC-hs layer. Range: number of ACKs for transport block with size 10001..11000

Data Source

NodeB

Source Field

pmAck64Qam

Source Section

HsDschResources

pmAck64Qam_11

Counting the number of received ACKs for a specified transport block size (TBS) with 64QAM. The number of successful HARQ transmissions are counted of the MAC-hs layer. Range: number of ACKs for transport block with size 11001..12000

Data Source

NodeB

Source Field

pmAck64Qam

Source Section

HsDschResources

pmAck64Qam_12

Counting the number of received ACKs for a specified transport block size (TBS) with 64QAM. The number of successful HARQ transmissions are counted of the MAC-hs layer. Range: number of ACKs for transport block with size 12001..13000

Data Source

NodeB

Source Field

pmAck64Qam

Source Section

HsDschResources

pmAck64Qam_13

Counting the number of received ACKs for a specified transport block size (TBS) with 64QAM. The number of successful HARQ transmissions are counted of the MAC-hs layer. Range: number of ACKs for transport block with size 13001..14000

Data Source

NodeB

Source Field

pmAck64Qam

Source Section

HsDschResources

pmAck64Qam_14

Counting the number of received ACKs for a specified transport block size (TBS) with 64QAM. The number of successful HARQ transmissions are counted of the MAC-hs layer. Range: number of ACKs for transport block with size 14001..15000

Data Source

NodeB

Source Field

pmAck64Qam

Source Section

HsDschResources

pmAck64Qam_15

Counting the number of received ACKs for a specified transport block size (TBS) with 64QAM. The number of successful HARQ transmissions are counted of the MAC-hs layer. Range: number of ACKs for transport block with size 15001..16000

Data Source

NodeB

Source Field

pmAck64Qam

Source Section

HsDschResources

pmAck64Qam_16

Counting the number of received ACKs for a specified transport block size (TBS) with 64QAM. The number of successful HARQ transmissions are counted of the MAC-hs layer. Range: number of ACKs for transport block with size 16001..17000

Data Source

NodeB

Source Field

pmAck64Qam

Source Section

HsDschResources

pmAck64Qam_17

Counting the number of received ACKs for a specified transport block size (TBS) with 64QAM. The number of successful HARQ transmissions are counted of the MAC-hs layer. Range: number of ACKs for transport block with size 17001..19000

Data Source

NodeB

Source Field

pmAck64Qam

Source Section

HsDschResources

pmAck64Qam_18

Counting the number of received ACKs for a specified transport block size (TBS) with 64QAM. The number of successful HARQ transmissions are counted of the MAC-hs layer. Range: number of ACKs for transport block with size 19001..21000

Data Source

NodeB

Source Field

pmAck64Qam

Source Section

HsDschResources

pmAck64Qam_19

Counting the number of received ACKs for a specified transport block size (TBS) with 64QAM. The number of successful HARQ transmissions are counted of the MAC-hs layer. Range: number of ACKs for transport block with size 21001..23000

Data Source

NodeB

Source Field

pmAck64Qam

Source Section

HsDschResources

pmAck64Qam_20

Counting the number of received ACKs for a specified transport block size (TBS) with 64QAM. The number of successful HARQ transmissions are counted of the MAC-hs layer. Range: number of ACKs for transport block with size 23001..25000

Data Source

NodeB

Source Field

pmAck64Qam

Source Section

HsDschResources

pmAck64Qam_21

Counting the number of received ACKs for a specified transport block size (TBS) with 64QAM. The number of successful HARQ transmissions are counted of the MAC-hs layer. Range: number of ACKs for transport block with size 25001..27000

Data Source

NodeB

Source Field

pmAck64Qam

Source Section

HsDschResources

pmAck64Qam_22

Counting the number of received ACKs for a specified transport block size (TBS) with 64QAM. The number of successful HARQ transmissions are counted of the MAC-hs layer. Range: number of ACKs for transport block with size 27001..29000

Data Source

NodeB

Source Field

pmAck64Qam

Source Section

HsDschResources

pmAck64Qam_23

Counting the number of received ACKs for a specified transport block size (TBS) with 64QAM. The number of successful HARQ transmissions are counted of the MAC-hs layer. Range: number of ACKs for transport block with size 29001..31000

Data Source

NodeB

Source Field

pmAck64Qam

Source Section

HsDschResources

pmAck64Qam_24

Counting the number of received ACKs for a specified transport block size (TBS) with 64QAM. The number of successful HARQ transmissions are counted of the MAC-hs layer. Range: number of ACKs for transport block with size 31001..33000

Data Source

NodeB

Source Field

pmAck64Qam

Source Section

HsDschResources

pmAck64Qam_25

Counting the number of received ACKs for a specified transport block size (TBS) with 64QAM. The number of successful HARQ transmissions are counted of the MAC-hs layer. Range: number of ACKs for transport block with size 33001..35000

Data Source

NodeB

Source Field

pmAck64Qam

Source Section

HsDschResources

pmAck64Qam_26

Counting the number of received ACKs for a specified transport block size (TBS) with 64QAM. The number of successful HARQ transmissions are counted of the MAC-hs layer. Range: number of ACKs for transport block with size 35001..37000

Data Source

NodeB

Source Field

pmAck64Qam

Source Section

HsDschResources

pmAck64Qam_27

Counting the number of received ACKs for a specified transport block size (TBS) with 64QAM. The number of successful HARQ transmissions are counted of the MAC-hs layer. Range: number of ACKs for transport block with size 37001..39000

Data Source

NodeB

Source Field

pmAck64Qam

Source Section

HsDschResources

pmAck64Qam_28

Counting the number of received ACKs for a specified transport block size (TBS) with 64QAM. The number of successful HARQ transmissions are counted of the MAC-hs layer. Range: number of ACKs for transport block with size 39001..41000

Data Source

NodeB

Source Field

pmAck64Qam

Source Section

HsDschResources

pmAck64Qam_29

Counting the number of received ACKs for a specified transport block size (TBS) with 64QAM. The number of successful HARQ transmissions are counted of the MAC-hs layer. Range: number of ACKs for transport block with size 41001..43000

Data Source

NodeB

Source Field

pmAck64Qam

Source Section

HsDschResources

pmAckQpsk_01

Number of received ACKs for a specified transport block size with Quadrature Phase Shift Keying (QPSK). The number of successful HARQ transmissions are counted on the MAC-hs layer.

Data Source

NodeB

Source Field

pmAckQpsk

Source Section

HsDschResources

pmAckQpsk_02

Number of received ACKs for a specified transport block size with Quadrature Phase Shift Keying (QPSK). The number of successful HARQ transmissions are counted on the MAC-hs layer.

Data Source

NodeB

Source Field

pmAckQpsk

Source Section

HsDschResources

pmAckQpsk_03

Number of received ACKs for a specified transport block size with Quadrature Phase Shift Keying (QPSK). The number of successful HARQ transmissions are counted on the MAC-hs layer.

Data Source

NodeB

Source Field

pmAckQpsk

Source Section

HsDschResources

pmAckQpsk_04

Number of received ACKs for a specified transport block size with Quadrature Phase Shift Keying (QPSK). The number of successful HARQ transmissions are counted on the MAC-hs layer.

Data Source

NodeB

Source Field

pmAckQpsk

Source Section

HsDschResources

pmAckQpsk_05

Number of received ACKs for a specified transport block size with Quadrature Phase Shift Keying (QPSK). The number of successful HARQ transmissions are counted on the MAC-hs layer.

Data Source

NodeB

Source Field

pmAckQpsk

Source Section

HsDschResources

pmAckQpsk_06

Number of received ACKs for a specified transport block size with Quadrature Phase Shift Keying (QPSK). The number of successful HARQ transmissions are counted on the MAC-hs layer.

Data Source

NodeB

Source Field

pmAckQpsk

Source Section

HsDschResources

pmAckQpsk_07

Number of received ACKs for a specified transport block size with Quadrature Phase Shift Keying (QPSK). The number of successful HARQ transmissions are counted on the MAC-hs layer.

Data Source

NodeB

Source Field

pmAckQpsk

Source Section

HsDschResources

pmAckQpsk_08

Number of received ACKs for a specified transport block size with Quadrature Phase Shift Keying (QPSK). The number of successful HARQ transmissions are counted on the MAC-hs layer.

Data Source

NodeB

Source Field

pmAckQpsk

Source Section

HsDschResources

pmAckQpsk_09

Number of received ACKs for a specified transport block size with Quadrature Phase Shift Keying (QPSK). The number of successful HARQ transmissions are counted on the MAC-hs layer.

Data Source

NodeB

Source Field

pmAckQpsk

Source Section

HsDschResources

pmAckQpsk_10

Number of received ACKs for a specified transport block size with Quadrature Phase Shift Keying (QPSK). The number of successful HARQ transmissions are counted on the MAC-hs layer.

Data Source

NodeB

Source Field

pmAckQpsk

Source Section

HsDschResources

pmAckQpsk_11

Number of received ACKs for a specified transport block size with Quadrature Phase Shift Keying (QPSK). The number of successful HARQ transmissions are counted on the MAC-hs layer.

Data Source

NodeB

Source Field

pmAckQpsk

Source Section

HsDschResources

pmAckQpsk_12

Number of received ACKs for a specified transport block size with Quadrature Phase Shift Keying (QPSK). The number of successful HARQ transmissions are counted on the MAC-hs layer.

Data Source

NodeB

Source Field

pmAckQpsk

Source Section

HsDschResources

pmAckQpsk_13

Number of received ACKs for a specified transport block size with Quadrature Phase Shift Keying (QPSK). The number of successful HARQ transmissions are counted on the MAC-hs layer.

Data Source

NodeB

Source Field

pmAckQpsk

Source Section

HsDschResources

pmAckQpsk_14

Number of received ACKs for a specified transport block size with Quadrature Phase Shift Keying (QPSK). The number of successful HARQ transmissions are counted on the MAC-hs layer.

Data Source

NodeB

Source Field

pmAckQpsk

Source Section

HsDschResources

pmAckQpsk_15

Number of received ACKs for a specified transport block size with Quadrature Phase Shift Keying (QPSK). The number of successful HARQ transmissions are counted on the MAC-hs layer.

Data Source

NodeB

Source Field

pmAckQpsk

Source Section

HsDschResources

pmAckQpsk_16

Number of received ACKs for a specified transport block size with Quadrature Phase Shift Keying (QPSK). The number of successful HARQ transmissions are counted on the MAC-hs layer.

Data Source

NodeB

Source Field

pmAckQpsk

Source Section

HsDschResources

pmAckQpsk_17

Number of received ACKs for a specified transport block size with Quadrature Phase Shift Keying (QPSK). The number of successful HARQ transmissions are counted on the MAC-hs layer.

Data Source

NodeB

Source Field

pmAckQpsk

Source Section

HsDschResources

pmAckQpsk_18

Number of received ACKs for a specified transport block size with Quadrature Phase Shift Keying (QPSK). The number of successful HARQ transmissions are counted on the MAC-hs layer.

Data Source

NodeB

Source Field

pmAckQpsk

Source Section

HsDschResources

pmAckQpsk_19

Number of received ACKs for a specified transport block size with Quadrature Phase Shift Keying (QPSK). The number of successful HARQ transmissions are counted on the MAC-hs layer.

Data Source

NodeB

Source Field

pmAckQpsk

Source Section

HsDschResources

pmAckQpsk_20

Number of received ACKs for a specified transport block size with Quadrature Phase Shift Keying (QPSK). The number of successful HARQ transmissions are counted on the MAC-hs layer.

Data Source

NodeB

Source Field

pmAckQpsk

Source Section

HsDschResources

pmAckQpsk_21

Number of received ACKs for a specified transport block size with Quadrature Phase Shift Keying (QPSK). The number of successful HARQ transmissions are counted on the MAC-hs layer.

Data Source

NodeB

Source Field

pmAckQpsk

Source Section

HsDschResources

pmAckQpsk_22

Number of received ACKs for a specified transport block size with Quadrature Phase Shift Keying (QPSK). The number of successful HARQ transmissions are counted on the MAC-hs layer.

Data Source

NodeB

Source Field

pmAckQpsk

Source Section

HsDschResources

pmAckQpsk_23

Number of received ACKs for a specified transport block size with Quadrature Phase Shift Keying (QPSK). The number of successful HARQ transmissions are counted on the MAC-hs layer.

Data Source

NodeB

Source Field

pmAckQpsk

Source Section

HsDschResources

pmAckQpsk_24

Number of received ACKs for a specified transport block size with Quadrature Phase Shift Keying (QPSK). The number of successful HARQ transmissions are counted on the MAC-hs layer.

Data Source

NodeB

Source Field

pmAckQpsk

Source Section

HsDschResources

pmAckQpsk_25

Number of received ACKs for a specified transport block size with Quadrature Phase Shift Keying (QPSK). The number of successful HARQ transmissions are counted on the MAC-hs layer.

Data Source

NodeB

Source Field

pmAckQpsk

Source Section

HsDschResources

pmAckQpsk_26

Number of received ACKs for a specified transport block size with Quadrature Phase Shift Keying (QPSK). The number of successful HARQ transmissions are counted on the MAC-hs layer.

Data Source

NodeB

Source Field

pmAckQpsk

Source Section

HsDschResources

pmAckQpsk_27

Number of received ACKs for a specified transport block size with Quadrature Phase Shift Keying (QPSK). The number of successful HARQ transmissions are counted on the MAC-hs layer.

Data Source

NodeB

Source Field

pmAckQpsk

Source Section

HsDschResources

pmAckQpsk_28

Number of received ACKs for a specified transport block size with Quadrature Phase Shift Keying (QPSK). The number of successful HARQ transmissions are counted on the MAC-hs layer.

Data Source

NodeB

Source Field

pmAckQpsk

Source Section

HsDschResources

pmAckQpsk_29

Number of received ACKs for a specified transport block size with Quadrature Phase Shift Keying (QPSK). The number of successful HARQ transmissions are counted on the MAC-hs layer.

Data Source

NodeB

Source Field

pmAckQpsk

Source Section

HsDschResources

pmAckQpsk_30

Number of received ACKs for a specified transport block size with Quadrature Phase Shift Keying (QPSK). The number of successful HARQ transmissions are counted on the MAC-hs layer.

Data Source

NodeB

Source Field

pmAckQpsk

Source Section

HsDschResources

pmAckReceived

The number of occasions when Acknowledgement (ACK) is received

Data Source

NodeB

Source Field

pmAckReceived

Source Section

HsDschResources

pmAllocRejHwHsDschUsers

The number of attempts to allocate resources for new HS-DSCH user that is rejected due to lack of HS resource capacity.

Data Source

NodeB

Source Field

pmAllocRejHwHsDschUsers

Source Section

HsDschResources

pmAverageUserRate_0

The distribution of the average user rate among all users allocated to high-speed-DSCH in the cell in the range 0 to 8

Data Source

NodeB

Source Field

pmAverageUserRate

Source Section

HsDschResources

pmAverageUserRate_1

The distribution of the average user rate among all users allocated to high-speed-DSCH in the cell in the range 8 to 16

Data Source

NodeB

Source Field

pmAverageUserRate

Source Section

HsDschResources

pmAverageUserRate_10

The distribution of the average user rate among all users allocated to high-speed-DSCH in the cell in the range 384 to 512

Data Source

NodeB

Source Field

pmAverageUserRate

Source Section

HsDschResources

pmAverageUserRate_11

The distribution of the average user rate among all users allocated to high-speed-DSCH in the cell in the range 512 to 768

Data Source

NodeB

Source Field

pmAverageUserRate

Source Section

HsDschResources

pmAverageUserRate_12

The distribution of the average user rate among all users allocated to high-speed-DSCH in the cell in the range 768 to 1024

Data Source

NodeB

Source Field

pmAverageUserRate

Source Section

HsDschResources

pmAverageUserRate_13

The distribution of the average user rate among all users allocated to high-speed-DSCH in the cell in the range 1024 to 1536

Data Source

NodeB

Source Field

pmAverageUserRate

Source Section

HsDschResources

pmAverageUserRate_14

The distribution of the average user rate among all users allocated to high-speed-DSCH in the cell in the range 1536 to 2048

Data Source

NodeB

Source Field

pmAverageUserRate

Source Section

HsDschResources

pmAverageUserRate_15

The distribution of the average user rate among all users allocated to high-speed-DSCH in the cell in the range 2048 to 3072

Data Source

NodeB

Source Field

pmAverageUserRate

Source Section

HsDschResources

pmAverageUserRate_16

The distribution of the average user rate among all users allocated to high-speed-DSCH in the cell in the range 3072 to 4096

Data Source

NodeB

Source Field

pmAverageUserRate

Source Section

HsDschResources

pmAverageUserRate_17

The distribution of the average user rate among all users allocated to high-speed-DSCH in the cell in the range 4096 and upwards

Data Source

NodeB

Source Field

pmAverageUserRate

Source Section

HsDschResources

pmAverageUserRate_2

The distribution of the average user rate among all users allocated to high-speed-DSCH in the cell in the range 16 to 32

Data Source

NodeB

Source Field

pmAverageUserRate

Source Section

HsDschResources

pmAverageUserRate_3

The distribution of the average user rate among all users allocated to high-speed-DSCH in the cell in the range 32 to 48

Data Source

NodeB

Source Field

pmAverageUserRate

Source Section

HsDschResources

pmAverageUserRate_4

The distribution of the average user rate among all users allocated to high-speed-DSCH in the cell in the range 48 to 64

Data Source

NodeB

Source Field

pmAverageUserRate

Source Section

HsDschResources

pmAverageUserRate_5

The distribution of the average user rate among all users allocated to high-speed-DSCH in the cell in the range 64 to 96

Data Source

NodeB

Source Field

pmAverageUserRate

Source Section

HsDschResources

pmAverageUserRate_6

The distribution of the average user rate among all users allocated to high-speed-DSCH in the cell in the range 96 to 128

Data Source

NodeB

Source Field

pmAverageUserRate

Source Section

HsDschResources

pmAverageUserRate_7

The distribution of the average user rate among all users allocated to high-speed-DSCH in the cell in the range 128 to 192

Data Source

NodeB

Source Field

pmAverageUserRate

Source Section

HsDschResources

pmAverageUserRate_8

The distribution of the average user rate among all users allocated to high-speed-DSCH in the cell in the range 192 to 256

Data Source

NodeB

Source Field

pmAverageUserRate

Source Section

HsDschResources

pmAverageUserRate_9

The distribution of the average user rate among all users allocated to high-speed-DSCH in the cell in the range 256 to 384

Data Source

NodeB

Source Field

pmAverageUserRate

Source Section

HsDschResources

pmCapacityAllocAttHsDschUsers

The number of attempts to allocate resources for new HS-DSCH user.

Data Source

NodeB

Source Field

pmCapacityAllocAttHsDschUsers

Source Section

HsDschResources

pmCapacityAllocAttHsPdschCodes

The number of attempts to allocate HS-PDSCH codes.

Data Source

NodeB

Source Field

pmCapacityAllocAttHsPdschCodes

Source Section

HsDschResources

pmCapacityAllocRejHsDschUsers

The number of attempts to allocate resources for new HS-DSCH user that are rejected (related to bin [0] of pmCapacityHsDschUsers).

Data Source

NodeB

Source Field

pmCapacityAllocRejHsDschUsers

Source Section

HsDschResources

pmCapacityAllocRejHsPdschCodes

The number of attempts to allocate HS-PDSCH codes that are rejected (related to bin [0] of pmCapacityHsPdschCodes).

Data Source

NodeB

Source Field

pmCapacityAllocRejHsPdschCodes

Source Section

HsDschResources

pmCapacityHsDschUsers_00

The distribution of the number of HS-DSCH users, as percentages of the corresponding license limit. Range: License limit

Data Source

NodeB

Source Field

pmCapacityHsDschUsers

Source Section

HsDschResources

pmCapacityHsDschUsers_01

The distribution of the number of HS-DSCH users, as percentages of the corresponding license limit. Range: Number of sampled value in range 0..5%

Data Source

NodeB

Source Field

pmCapacityHsDschUsers

Source Section

HsDschResources

pmCapacityHsDschUsers_02

The distribution of the number of HS-DSCH users, as percentages of the corresponding license limit. Range: Number of sampled value in range 5..10%

Data Source

NodeB

Source Field

pmCapacityHsDschUsers

Source Section

HsDschResources

pmCapacityHsDschUsers_03

The distribution of the number of HS-DSCH users, as percentages of the corresponding license limit. Range: Number of sampled value in range 10..15%

Data Source

NodeB

Source Field

pmCapacityHsDschUsers

Source Section

HsDschResources

pmCapacityHsDschUsers_04

The distribution of the number of HS-DSCH users, as percentages of the corresponding license limit. Range: Number of sampled value in range 15..20%

Data Source

NodeB

Source Field

pmCapacityHsDschUsers

Source Section

HsDschResources

pmCapacityHsDschUsers_05

The distribution of the number of HS-DSCH users, as percentages of the corresponding license limit. Range: Number of sampled value in range 20..25%

Data Source

NodeB

Source Field

pmCapacityHsDschUsers

Source Section

HsDschResources

pmCapacityHsDschUsers_06

The distribution of the number of HS-DSCH users, as percentages of the corresponding license limit. Range: Number of sampled value in range 25..30%

Data Source

NodeB

Source Field

pmCapacityHsDschUsers

Source Section

HsDschResources

pmCapacityHsDschUsers_07

The distribution of the number of HS-DSCH users, as percentages of the corresponding license limit. Range: Number of sampled value in range 30..35%

Data Source

NodeB

Source Field

pmCapacityHsDschUsers

Source Section

HsDschResources

pmCapacityHsDschUsers_08

The distribution of the number of HS-DSCH users, as percentages of the corresponding license limit. Range: Number of sampled value in range 35..40%

Data Source

NodeB

Source Field

pmCapacityHsDschUsers

Source Section

HsDschResources

pmCapacityHsDschUsers_09

The distribution of the number of HS-DSCH users, as percentages of the corresponding license limit. Range: Number of sampled value in range 40..45%

Data Source

NodeB

Source Field

pmCapacityHsDschUsers

Source Section

HsDschResources

pmCapacityHsDschUsers_10

The distribution of the number of HS-DSCH users, as percentages of the corresponding license limit. Range: Number of sampled value in range 45..50%

Data Source

NodeB

Source Field

pmCapacityHsDschUsers

Source Section

HsDschResources

pmCapacityHsDschUsers_11

The distribution of the number of HS-DSCH users, as percentages of the corresponding license limit. Range: Number of sampled value in range 50..55%

Data Source

NodeB

Source Field

pmCapacityHsDschUsers

Source Section

HsDschResources

pmCapacityHsDschUsers_12

The distribution of the number of HS-DSCH users, as percentages of the corresponding license limit. Range:Number of sampled value in range 55..60%

Data Source

NodeB

Source Field

pmCapacityHsDschUsers

Source Section

HsDschResources

pmCapacityHsDschUsers_13

The distribution of the number of HS-DSCH users, as percentages of the corresponding license limit. Range: Number of sampled value in range 60..65%

Data Source

NodeB

Source Field

pmCapacityHsDschUsers

Source Section

HsDschResources

pmCapacityHsDschUsers_14

The distribution of the number of HS-DSCH users, as percentages of the corresponding license limit. Range: Number of sampled value in range 65..70%

Data Source

NodeB

Source Field

pmCapacityHsDschUsers

Source Section

HsDschResources

pmCapacityHsDschUsers_15

The distribution of the number of HS-DSCH users, as percentages of the corresponding license limit. Range: Number of sampled value in range 70..75%

Data Source

NodeB

Source Field

pmCapacityHsDschUsers

Source Section

HsDschResources

pmCapacityHsDschUsers_16

The distribution of the number of HS-DSCH users, as percentages of the corresponding license limit. Range: Number of sampled value in range 75..80%

Data Source

NodeB

Source Field

pmCapacityHsDschUsers

Source Section

HsDschResources

pmCapacityHsDschUsers_17

The distribution of the number of HS-DSCH users, as percentages of the corresponding license limit. Range: Number of sampled value in range 80..85%

Data Source

NodeB

Source Field

pmCapacityHsDschUsers

Source Section

HsDschResources

pmCapacityHsDschUsers_18

The distribution of the number of HS-DSCH users, as percentages of the corresponding license limit. Range:Number of sampled value in range 85..90%

Data Source

NodeB

Source Field

pmCapacityHsDschUsers

Source Section

HsDschResources

pmCapacityHsDschUsers_19

The distribution of the number of HS-DSCH users, as percentages of the corresponding license limit. Range: Number of sampled value in range 90..95%

Data Source

NodeB

Source Field

pmCapacityHsDschUsers

Source Section

HsDschResources

pmCapacityHsDschUsers_20

The distribution of the number of HS-DSCH users, as percentages of the corresponding license limit. Range:Number of sampled value in range >=95%

Data Source

NodeB

Source Field

pmCapacityHsDschUsers

Source Section

HsDschResources

pmCapacityHsPdschCodes_00

The distribution of the HS-PDSCH code utilization, as license limit percentages of the number of HS-PDSCH codes available for the scheduler. Rango: Configured license limit

Data Source

NodeB

Source Field

pmCapacityHsPdschCodes

Source Section

HsDschResources

pmCapacityHsPdschCodes_01

The distribution of the HS-PDSCH code utilization, as license limit percentages of the number of HS-PDSCH codes available for the scheduler. Range: Number of sampled value in range 0..20%

Data Source

NodeB

Source Field

pmCapacityHsPdschCodes

Source Section

HsDschResources

pmCapacityHsPdschCodes_02

The distribution of the HS-PDSCH code utilization, as license limit percentages of the number of HS-PDSCH codes available for the scheduler. Range: Number of sampled value in range 20..40%

Data Source

NodeB

Source Field

pmCapacityHsPdschCodes

Source Section

HsDschResources

pmCapacityHsPdschCodes_03

The distribution of the HS-PDSCH code utilization, as license limit percentages of the number of HS-PDSCH codes available for the scheduler. Range: Number of sampled value in range 40..50%

Data Source

NodeB

Source Field

pmCapacityHsPdschCodes

Source Section

HsDschResources

pmCapacityHsPdschCodes_04

The distribution of the HS-PDSCH code utilization, as license limit percentages of the number of HS-PDSCH codes available for the scheduler. Range: Number of sampled value in range 50..60%

Data Source

NodeB

Source Field

pmCapacityHsPdschCodes

Source Section

HsDschResources

pmCapacityHsPdschCodes_05

The distribution of the HS-PDSCH code utilization, as license limit percentages of the number of HS-PDSCH codes available for the scheduler. Range: Number of sampled value in range 60..70%

Data Source

NodeB

Source Field

pmCapacityHsPdschCodes

Source Section

HsDschResources

pmCapacityHsPdschCodes_06

The distribution of the HS-PDSCH code utilization, as license limit percentages of the number of HS-PDSCH codes available for the scheduler. Range: Number of sampled value in range 70..80%

Data Source

NodeB

Source Field

pmCapacityHsPdschCodes

Source Section

HsDschResources

pmCapacityHsPdschCodes_07

The distribution of the HS-PDSCH code utilization, as license limit percentages of the number of HS-PDSCH codes available for the scheduler. Range: Number of sampled value in range 80..85%

Data Source

NodeB

Source Field

pmCapacityHsPdschCodes

Source Section

HsDschResources

pmCapacityHsPdschCodes_08

The distribution of the HS-PDSCH code utilization, as license limit percentages of the number of HS-PDSCH codes available for the scheduler. Range: Number of sampled value in range 85..90%

Data Source

NodeB

Source Field

pmCapacityHsPdschCodes

Source Section

HsDschResources

pmCapacityHsPdschCodes_09

The distribution of the HS-PDSCH code utilization, as license limit percentages of the number of HS-PDSCH codes available for the scheduler. Range:Number of sampled value in range 90..95%

Data Source

NodeB

Source Field

pmCapacityHsPdschCodes

Source Section

HsDschResources

pmCapacityHsPdschCodes_10

The distribution of the HS-PDSCH code utilization, as license limit percentages of the number of HS-PDSCH codes available for the scheduler. Number of sampled value in range >=95%

Data Source

NodeB

Source Field

pmCapacityHsPdschCodes

Source Section

HsDschResources

pmDelayDistrSpi00_01

Measurements to observe the distribution of the scheduling delay for scheduling priority class 00-15 on each subframe on those priority queue(s) selected for transmission. The scheduling delay is counted as a percentage of schMaxdelay of each priority class and 3000 ms will be used as a schMaxDelay in case it is set to -1. Each counter observes a specific SPI. The different flows are configured ON/OFF using RBS MOM parameter IubDataStreams:: schHsFlowControlOnOff.

Data Source

NodeB

Source Field

pmDelayDistributionSpi00

Source Section

HsDschResources

pmDelayDistrSpi00_02

Measurements to observe the distribution of the scheduling delay for scheduling priority class 00-15 on each subframe on those priority queue(s) selected for transmission. The scheduling delay is counted as a percentage of schMaxdelay of each priority class and 3000 ms will be used

as a schMaxDelay in case it is set to -1. Each counter observes a specific SPI. The different flows are configured ON/OFF using RBS MOM parameter IubDataStreams:: schHsFlowControlOnOff.

Data Source

NodeB

Source Field

pmDelayDistributionSpi00

Source Section

HsDschResources

pmDelayDistrSpi00_03

Measurements to observe the distribution of the scheduling delay for scheduling priority class 00-15 on each subframe on those priority queue(s) selected for transmission. The scheduling delay is counted as a percentage of schMaxdelay of each priority class and 3000 ms will be used as a schMaxDelay in case it is set to -1. Each counter observes a specific SPI. The different flows are configured ON/OFF using RBS MOM parameter IubDataStreams:: schHsFlowControlOnOff.

Data Source

NodeB

Source Field

pmDelayDistributionSpi00

Source Section

HsDschResources

pmDelayDistrSpi00_04

Measurements to observe the distribution of the scheduling delay for scheduling priority class 00-15 on each subframe on those priority queue(s) selected for transmission. The scheduling delay is counted as a percentage of schMaxdelay of each priority class and 3000 ms will be used as a schMaxDelay in case it is set to -1. Each counter observes a specific SPI. The different flows are configured ON/OFF using RBS MOM parameter IubDataStreams:: schHsFlowControlOnOff.

Data Source

NodeB

Source Field

pmDelayDistributionSpi00

Source Section

HsDschResources

pmDelayDistrSpi00_05

Measurements to observe the distribution of the scheduling delay for scheduling priority class 00-15 on each subframe on those priority queue(s) selected for transmission. The scheduling delay is counted as a percentage of schMaxdelay of each priority class and 3000 ms will be used as a schMaxDelay in case it is set to -1. Each counter observes a specific SPI. The different flows are configured ON/OFF using RBS MOM parameter IubDataStreams:: schHsFlowControlOnOff.

Data Source

NodeB

Source Field

pmDelayDistributionSpi00

Source Section

HsDschResources

pmDelayDistrSpi00_06

Measurements to observe the distribution of the scheduling delay for scheduling priority class 00-15 on each subframe on those priority queue(s) selected for transmission. The scheduling delay is counted as a percentage of schMaxdelay of each priority class and 3000 ms will be used as a schMaxDelay in case it is set to -1. Each counter observes a specific SPI. The different flows are configured ON/OFF using RBS MOM parameter IubDataStreams:: schHsFlowControlOnOff.

Data Source

NodeB

Source Field

pmDelayDistributionSpi00

Source Section

HsDschResources

pmDelayDistrSpi00_07

Measurements to observe the distribution of the scheduling delay for scheduling priority class 00-15 on each subframe on those priority queue(s) selected for transmission. The scheduling delay is counted as a percentage of schMaxdelay of each priority class and 3000 ms will be used as a schMaxDelay in case it is set to -1. Each counter observes a specific SPI. The different flows are configured ON/OFF using RBS MOM parameter IubDataStreams:: schHsFlowControlOnOff.

Data Source

NodeB

Source Field

pmDelayDistributionSpi00

Source Section

HsDschResources

pmDelayDistrSpi00_08

Measurements to observe the distribution of the scheduling delay for scheduling priority class 00-15 on each subframe on those priority queue(s) selected for transmission. The scheduling delay is counted as a percentage of schMaxdelay of each priority class and 3000 ms will be used as a schMaxDelay in case it is set to -1. Each counter observes a specific SPI. The different flows are configured ON/OFF using RBS MOM parameter IubDataStreams:: schHsFlowControlOnOff.

Data Source

NodeB

Source Field

pmDelayDistributionSpi00

Source Section

HsDschResources

pmDelayDistrSpi00_09

Measurements to observe the distribution of the scheduling delay for scheduling priority class 00-15 on each subframe on those priority queue(s) selected for transmission. The scheduling delay is counted as a percentage of schMaxdelay of each priority class and 3000 ms will be used as a schMaxDelay in case it is set to -1. Each counter observes a specific SPI. The different flows are configured ON/OFF using RBS MOM parameter IubDataStreams:: schHsFlowControlOnOff.

Data Source

NodeB

Source Field

pmDelayDistributionSpi00

Source Section

HsDschResources

pmDelayDistrSpi00_10

Measurements to observe the distribution of the scheduling delay for scheduling priority class 00-15 on each subframe on those priority queue(s) selected for transmission. The scheduling delay is counted as a percentage of schMaxdelay of each priority class and 3000 ms will be used as a schMaxDelay in case it is set to -1. Each counter observes a specific SPI. The different flows are configured ON/OFF using RBS MOM parameter IubDataStreams:: schHsFlowControlOnOff.

Data Source

NodeB

Source Field

pmDelayDistributionSpi00

Source Section

HsDschResources

pmDelayDistrSpi00_11

Measurements to observe the distribution of the scheduling delay for scheduling priority class 00-15 on each subframe on those priority queue(s) selected for transmission. The scheduling delay is counted as a percentage of schMaxdelay of each priority class and 3000 ms will be used as a schMaxDelay in case it is set to -1. Each counter observes a specific SPI. The different flows are configured ON/OFF using RBS MOM parameter IubDataStreams:: schHsFlowControlOnOff.

Data Source

NodeB

Source Field

pmDelayDistributionSpi00

Source Section

HsDschResources

pmDelayDistrSpi01_01

Measurements to observe the distribution of the scheduling delay for scheduling priority class 00-15 on each subframe on those priority queue(s) selected for transmission. The scheduling delay is counted as a percentage of schMaxdelay of each priority class and 3000 ms will be used as a schMaxDelay in case it is set to -1. Each counter observes a specific SPI. The different flows are configured ON/OFF using RBS MOM parameter IubDataStreams:: schHsFlowControlOnOff.

Data Source

NodeB

Source Field

pmDelayDistributionSpi01

Source Section

HsDschResources

pmDelayDistrSpi01_02

Measurements to observe the distribution of the scheduling delay for scheduling priority class 00-15 on each subframe on those priority queue(s) selected for transmission. The scheduling delay is counted as a percentage of schMaxdelay of each priority class and 3000 ms will be used as a schMaxDelay in case it is set to -1. Each counter observes a specific SPI. The different flows are configured ON/OFF using RBS MOM parameter IubDataStreams:: schHsFlowControlOnOff.

Data Source

NodeB

Source Field

pmDelayDistributionSpi01

Source Section

HsDschResources

pmDelayDistrSpi01_03

Measurements to observe the distribution of the scheduling delay for scheduling priority class 00-15 on each subframe on those priority queue(s) selected for transmission. The scheduling

delay is counted as a percentage of schMaxdelay of each priority class and 3000 ms will be used as a schMaxDelay in case it is set to -1. Each counter observes a specific SPI. The different flows are configured ON/OFF using RBS MOM parameter IubDataStreams:: schHsFlowControlOnOff.

Data Source

NodeB

Source Field

pmDelayDistributionSpi01

Source Section

HsDschResources

pmDelayDistrSpi01_04

Measurements to observe the distribution of the scheduling delay for scheduling priority class 00-15 on each subframe on those priority queue(s) selected for transmission. The scheduling delay is counted as a percentage of schMaxdelay of each priority class and 3000 ms will be used as a schMaxDelay in case it is set to -1. Each counter observes a specific SPI. The different flows are configured ON/OFF using RBS MOM parameter IubDataStreams:: schHsFlowControlOnOff.

Data Source

NodeB

Source Field

pmDelayDistributionSpi01

Source Section

HsDschResources

pmDelayDistrSpi01_05

Measurements to observe the distribution of the scheduling delay for scheduling priority class 00-15 on each subframe on those priority queue(s) selected for transmission. The scheduling delay is counted as a percentage of schMaxdelay of each priority class and 3000 ms will be used as a schMaxDelay in case it is set to -1. Each counter observes a specific SPI. The different flows are configured ON/OFF using RBS MOM parameter IubDataStreams:: schHsFlowControlOnOff.

Data Source

NodeB

Source Field

pmDelayDistributionSpi01

Source Section

HsDschResources

pmDelayDistrSpi01_06

Measurements to observe the distribution of the scheduling delay for scheduling priority class 00-15 on each subframe on those priority queue(s) selected for transmission. The scheduling delay is counted as a percentage of schMaxdelay of each priority class and 3000 ms will be used as a schMaxDelay in case it is set to -1. Each counter observes a specific SPI. The different flows are configured ON/OFF using RBS MOM parameter IubDataStreams:: schHsFlowControlOnOff.

Data Source

NodeB

Source Field

pmDelayDistributionSpi01

Source Section

HsDschResources

pmDelayDistrSpi01_07

Measurements to observe the distribution of the scheduling delay for scheduling priority class 00-15 on each subframe on those priority queue(s) selected for transmission. The scheduling delay is counted as a percentage of schMaxdelay of each priority class and 3000 ms will be used as a schMaxDelay in case it is set to -1. Each counter observes a specific SPI. The different flows are configured ON/OFF using RBS MOM parameter IubDataStreams:: schHsFlowControlOnOff.

Data Source

NodeB

Source Field

pmDelayDistributionSpi01

Source Section

HsDschResources

pmDelayDistrSpi01_08

Measurements to observe the distribution of the scheduling delay for scheduling priority class 00-15 on each subframe on those priority queue(s) selected for transmission. The scheduling delay is counted as a percentage of schMaxdelay of each priority class and 3000 ms will be used as a schMaxDelay in case it is set to -1. Each counter observes a specific SPI. The different flows are configured ON/OFF using RBS MOM parameter IubDataStreams:: schHsFlowControlOnOff.

Data Source

NodeB

Source Field

pmDelayDistributionSpi01

Source Section

HsDschResources

pmDelayDistrSpi01_09

Measurements to observe the distribution of the scheduling delay for scheduling priority class 00-15 on each subframe on those priority queue(s) selected for transmission. The scheduling delay is counted as a percentage of schMaxdelay of each priority class and 3000 ms will be used as a schMaxDelay in case it is set to -1. Each counter observes a specific SPI. The different flows are configured ON/OFF using RBS MOM parameter IubDataStreams:: schHsFlowControlOnOff.

Data Source

NodeB

Source Field

pmDelayDistributionSpi01

Source Section

HsDschResources

pmDelayDistrSpi01_10

Measurements to observe the distribution of the scheduling delay for scheduling priority class 00-15 on each subframe on those priority queue(s) selected for transmission. The scheduling delay is counted as a percentage of schMaxdelay of each priority class and 3000 ms will be used as a schMaxDelay in case it is set to -1. Each counter observes a specific SPI. The different flows are configured ON/OFF using RBS MOM parameter IubDataStreams:: schHsFlowControlOnOff.

Data Source

NodeB

Source Field

pmDelayDistributionSpi01

Source Section

HsDschResources

pmDelayDistrSpi01_11

Measurements to observe the distribution of the scheduling delay for scheduling priority class 00-15 on each subframe on those priority queue(s) selected for transmission. The scheduling delay is counted as a percentage of schMaxdelay of each priority class and 3000 ms will be used as a schMaxDelay in case it is set to -1. Each counter observes a specific SPI. The different flows are configured ON/OFF using RBS MOM parameter IubDataStreams:: schHsFlowControlOnOff.

Data Source

NodeB

Source Field

pmDelayDistributionSpi01

Source Section

HsDschResources

pmDelayDistrSpi02_01

Measurements to observe the distribution of the scheduling delay for scheduling priority class 00-15 on each subframe on those priority queue(s) selected for transmission. The scheduling delay is counted as a percentage of schMaxdelay of each priority class and 3000 ms will be used as a schMaxDelay in case it is set to -1. Each counter observes a specific SPI. The different flows are configured ON/OFF using RBS MOM parameter IubDataStreams:: schHsFlowControlOnOff.

Data Source

NodeB

Source Field

pmDelayDistributionSpi02

Source Section

HsDschResources

pmDelayDistrSpi02_02

Measurements to observe the distribution of the scheduling delay for scheduling priority class 00-15 on each subframe on those priority queue(s) selected for transmission. The scheduling delay is counted as a percentage of schMaxdelay of each priority class and 3000 ms will be used as a schMaxDelay in case it is set to -1. Each counter observes a specific SPI. The different flows are configured ON/OFF using RBS MOM parameter IubDataStreams:: schHsFlowControlOnOff.

Data Source

NodeB

Source Field

pmDelayDistributionSpi02

Source Section

HsDschResources

pmDelayDistrSpi02_03

Measurements to observe the distribution of the scheduling delay for scheduling priority class 00-15 on each subframe on those priority queue(s) selected for transmission. The scheduling delay is counted as a percentage of schMaxdelay of each priority class and 3000 ms will be used as a schMaxDelay in case it is set to -1. Each counter observes a specific SPI. The different flows are configured ON/OFF using RBS MOM parameter IubDataStreams:: schHsFlowControlOnOff.

Data Source

NodeB

Source Field

pmDelayDistributionSpi02

Source Section

HsDschResources

pmDelayDistrSpi02_04

Measurements to observe the distribution of the scheduling delay for scheduling priority class 00-15 on each subframe on those priority queue(s) selected for transmission. The scheduling

delay is counted as a percentage of schMaxdelay of each priority class and 3000 ms will be used as a schMaxDelay in case it is set to -1. Each counter observes a specific SPI. The different flows are configured ON/OFF using RBS MOM parameter IubDataStreams:: schHsFlowControlOnOff.

Data Source

NodeB

Source Field

pmDelayDistributionSpi02

Source Section

HsDschResources

pmDelayDistrSpi02_05

Measurements to observe the distribution of the scheduling delay for scheduling priority class 00-15 on each subframe on those priority queue(s) selected for transmission. The scheduling delay is counted as a percentage of schMaxdelay of each priority class and 3000 ms will be used as a schMaxDelay in case it is set to -1. Each counter observes a specific SPI. The different flows are configured ON/OFF using RBS MOM parameter IubDataStreams:: schHsFlowControlOnOff.

Data Source

NodeB

Source Field

pmDelayDistributionSpi02

Source Section

HsDschResources

pmDelayDistrSpi02_06

Measurements to observe the distribution of the scheduling delay for scheduling priority class 00-15 on each subframe on those priority queue(s) selected for transmission. The scheduling delay is counted as a percentage of schMaxdelay of each priority class and 3000 ms will be used as a schMaxDelay in case it is set to -1. Each counter observes a specific SPI. The different flows are configured ON/OFF using RBS MOM parameter IubDataStreams:: schHsFlowControlOnOff.

Data Source

NodeB

Source Field

pmDelayDistributionSpi02

Source Section

HsDschResources

pmDelayDistrSpi02_07

Measurements to observe the distribution of the scheduling delay for scheduling priority class 00-15 on each subframe on those priority queue(s) selected for transmission. The scheduling delay is counted as a percentage of schMaxdelay of each priority class and 3000 ms will be used as a schMaxDelay in case it is set to -1. Each counter observes a specific SPI. The different flows are configured ON/OFF using RBS MOM parameter IubDataStreams:: schHsFlowControlOnOff.

Data Source

NodeB

Source Field

pmDelayDistributionSpi02

Source Section

HsDschResources

pmDelayDistrSpi02_08

Measurements to observe the distribution of the scheduling delay for scheduling priority class 00-15 on each subframe on those priority queue(s) selected for transmission. The scheduling delay is counted as a percentage of schMaxdelay of each priority class and 3000 ms will be used as a schMaxDelay in case it is set to -1. Each counter observes a specific SPI. The different flows are configured ON/OFF using RBS MOM parameter IubDataStreams:: schHsFlowControlOnOff.

Data Source

NodeB

Source Field

pmDelayDistributionSpi02

Source Section

HsDschResources

pmDelayDistrSpi02_09

Measurements to observe the distribution of the scheduling delay for scheduling priority class 00-15 on each subframe on those priority queue(s) selected for transmission. The scheduling delay is counted as a percentage of schMaxdelay of each priority class and 3000 ms will be used as a schMaxDelay in case it is set to -1. Each counter observes a specific SPI. The different flows are configured ON/OFF using RBS MOM parameter IubDataStreams:: schHsFlowControlOnOff.

Data Source

NodeB

Source Field

pmDelayDistributionSpi02

Source Section

HsDschResources

pmDelayDistrSpi02_10

Measurements to observe the distribution of the scheduling delay for scheduling priority class 00-15 on each subframe on those priority queue(s) selected for transmission. The scheduling delay is counted as a percentage of schMaxdelay of each priority class and 3000 ms will be used as a schMaxDelay in case it is set to -1. Each counter observes a specific SPI. The different flows are configured ON/OFF using RBS MOM parameter IubDataStreams:: schHsFlowControlOnOff.

Data Source

NodeB

Source Field

pmDelayDistributionSpi02

Source Section

HsDschResources

pmDelayDistrSpi02_11

Measurements to observe the distribution of the scheduling delay for scheduling priority class 00-15 on each subframe on those priority queue(s) selected for transmission. The scheduling delay is counted as a percentage of schMaxdelay of each priority class and 3000 ms will be used as a schMaxDelay in case it is set to -1. Each counter observes a specific SPI. The different flows are configured ON/OFF using RBS MOM parameter IubDataStreams:: schHsFlowControlOnOff.

Data Source

NodeB

Source Field

pmDelayDistributionSpi02

Source Section

HsDschResources

pmDelayDistrSpi03_01

Measurements to observe the distribution of the scheduling delay for scheduling priority class 00-15 on each subframe on those priority queue(s) selected for transmission. The scheduling delay is counted as a percentage of schMaxdelay of each priority class and 3000 ms will be used as a schMaxDelay in case it is set to -1. Each counter observes a specific SPI. The different flows are configured ON/OFF using RBS MOM parameter IubDataStreams:: schHsFlowControlOnOff.

Data Source

NodeB

Source Field

pmDelayDistributionSpi03

Source Section

HsDschResources

pmDelayDistrSpi03_02

Measurements to observe the distribution of the scheduling delay for scheduling priority class 00-15 on each subframe on those priority queue(s) selected for transmission. The scheduling delay is counted as a percentage of schMaxdelay of each priority class and 3000 ms will be used as a schMaxDelay in case it is set to -1. Each counter observes a specific SPI. The different flows are configured ON/OFF using RBS MOM parameter IubDataStreams:: schHsFlowControlOnOff.

Data Source

NodeB

Source Field

pmDelayDistributionSpi03

Source Section

HsDschResources

pmDelayDistrSpi03_03

Measurements to observe the distribution of the scheduling delay for scheduling priority class 00-15 on each subframe on those priority queue(s) selected for transmission. The scheduling delay is counted as a percentage of schMaxdelay of each priority class and 3000 ms will be used as a schMaxDelay in case it is set to -1. Each counter observes a specific SPI. The different flows are configured ON/OFF using RBS MOM parameter IubDataStreams:: schHsFlowControlOnOff.

Data Source

NodeB

Source Field

pmDelayDistributionSpi03

Source Section

HsDschResources

pmDelayDistrSpi03_04

Measurements to observe the distribution of the scheduling delay for scheduling priority class 00-15 on each subframe on those priority queue(s) selected for transmission. The scheduling delay is counted as a percentage of schMaxdelay of each priority class and 3000 ms will be used as a schMaxDelay in case it is set to -1. Each counter observes a specific SPI. The different flows are configured ON/OFF using RBS MOM parameter IubDataStreams:: schHsFlowControlOnOff.

Data Source

NodeB

Source Field

pmDelayDistributionSpi03

Source Section

HsDschResources

pmDelayDistrSpi03_05

Measurements to observe the distribution of the scheduling delay for scheduling priority class 00-15 on each subframe on those priority queue(s) selected for transmission. The scheduling

delay is counted as a percentage of schMaxdelay of each priority class and 3000 ms will be used as a schMaxDelay in case it is set to -1. Each counter observes a specific SPI. The different flows are configured ON/OFF using RBS MOM parameter IubDataStreams:: schHsFlowControlOnOff.

Data Source

NodeB

Source Field

pmDelayDistributionSpi03

Source Section

HsDschResources

pmDelayDistrSpi03_06

Measurements to observe the distribution of the scheduling delay for scheduling priority class 00-15 on each subframe on those priority queue(s) selected for transmission. The scheduling delay is counted as a percentage of schMaxdelay of each priority class and 3000 ms will be used as a schMaxDelay in case it is set to -1. Each counter observes a specific SPI. The different flows are configured ON/OFF using RBS MOM parameter IubDataStreams:: schHsFlowControlOnOff.

Data Source

NodeB

Source Field

pmDelayDistributionSpi03

Source Section

HsDschResources

pmDelayDistrSpi03_07

Measurements to observe the distribution of the scheduling delay for scheduling priority class 00-15 on each subframe on those priority queue(s) selected for transmission. The scheduling delay is counted as a percentage of schMaxdelay of each priority class and 3000 ms will be used as a schMaxDelay in case it is set to -1. Each counter observes a specific SPI. The different flows are configured ON/OFF using RBS MOM parameter IubDataStreams:: schHsFlowControlOnOff.

Data Source

NodeB

Source Field

pmDelayDistributionSpi03

Source Section

HsDschResources

pmDelayDistrSpi03_08

Measurements to observe the distribution of the scheduling delay for scheduling priority class 00-15 on each subframe on those priority queue(s) selected for transmission. The scheduling delay is counted as a percentage of schMaxdelay of each priority class and 3000 ms will be used as a schMaxDelay in case it is set to -1. Each counter observes a specific SPI. The different flows are configured ON/OFF using RBS MOM parameter IubDataStreams:: schHsFlowControlOnOff.

Data Source

NodeB

Source Field

pmDelayDistributionSpi03

Source Section

HsDschResources

pmDelayDistrSpi03_09

Measurements to observe the distribution of the scheduling delay for scheduling priority class 00-15 on each subframe on those priority queue(s) selected for transmission. The scheduling delay is counted as a percentage of schMaxdelay of each priority class and 3000 ms will be used as a schMaxDelay in case it is set to -1. Each counter observes a specific SPI. The different flows are configured ON/OFF using RBS MOM parameter IubDataStreams:: schHsFlowControlOnOff.

Data Source

NodeB

Source Field

pmDelayDistributionSpi03

Source Section

HsDschResources

pmDelayDistrSpi03_10

Measurements to observe the distribution of the scheduling delay for scheduling priority class 00-15 on each subframe on those priority queue(s) selected for transmission. The scheduling delay is counted as a percentage of schMaxdelay of each priority class and 3000 ms will be used as a schMaxDelay in case it is set to -1. Each counter observes a specific SPI. The different flows are configured ON/OFF using RBS MOM parameter IubDataStreams:: schHsFlowControlOnOff.

Data Source

NodeB

Source Field

pmDelayDistributionSpi03

Source Section

HsDschResources

pmDelayDistrSpi03_11

Measurements to observe the distribution of the scheduling delay for scheduling priority class 00-15 on each subframe on those priority queue(s) selected for transmission. The scheduling delay is counted as a percentage of schMaxdelay of each priority class and 3000 ms will be used as a schMaxDelay in case it is set to -1. Each counter observes a specific SPI. The different flows are configured ON/OFF using RBS MOM parameter IubDataStreams:: schHsFlowControlOnOff.

Data Source

NodeB

Source Field

pmDelayDistributionSpi03

Source Section

HsDschResources

pmDelayDistrSpi04_01

Measurements to observe the distribution of the scheduling delay for scheduling priority class 00-15 on each subframe on those priority queue(s) selected for transmission. The scheduling delay is counted as a percentage of schMaxdelay of each priority class and 3000 ms will be used as a schMaxDelay in case it is set to -1. Each counter observes a specific SPI. The different flows are configured ON/OFF using RBS MOM parameter IubDataStreams:: schHsFlowControlOnOff.

Data Source

NodeB

Source Field

pmDelayDistributionSpi04

Source Section

HsDschResources

pmDelayDistrSpi04_02

Measurements to observe the distribution of the scheduling delay for scheduling priority class 00-15 on each subframe on those priority queue(s) selected for transmission. The scheduling delay is counted as a percentage of schMaxdelay of each priority class and 3000 ms will be used as a schMaxDelay in case it is set to -1. Each counter observes a specific SPI. The different flows are configured ON/OFF using RBS MOM parameter IubDataStreams:: schHsFlowControlOnOff.

Data Source

NodeB

Source Field

pmDelayDistributionSpi04

Source Section

HsDschResources

pmDelayDistrSpi04_03

Measurements to observe the distribution of the scheduling delay for scheduling priority class 00-15 on each subframe on those priority queue(s) selected for transmission. The scheduling delay is counted as a percentage of schMaxdelay of each priority class and 3000 ms will be used as a schMaxDelay in case it is set to -1. Each counter observes a specific SPI. The different flows are configured ON/OFF using RBS MOM parameter IubDataStreams:: schHsFlowControlOnOff.

Data Source

NodeB

Source Field

pmDelayDistributionSpi04

Source Section

HsDschResources

pmDelayDistrSpi04_04

Measurements to observe the distribution of the scheduling delay for scheduling priority class 00-15 on each subframe on those priority queue(s) selected for transmission. The scheduling delay is counted as a percentage of schMaxdelay of each priority class and 3000 ms will be used as a schMaxDelay in case it is set to -1. Each counter observes a specific SPI. The different flows are configured ON/OFF using RBS MOM parameter IubDataStreams:: schHsFlowControlOnOff.

Data Source

NodeB

Source Field

pmDelayDistributionSpi04

Source Section

HsDschResources

pmDelayDistrSpi04_05

Measurements to observe the distribution of the scheduling delay for scheduling priority class 00-15 on each subframe on those priority queue(s) selected for transmission. The scheduling delay is counted as a percentage of schMaxdelay of each priority class and 3000 ms will be used as a schMaxDelay in case it is set to -1. Each counter observes a specific SPI. The different flows are configured ON/OFF using RBS MOM parameter IubDataStreams:: schHsFlowControlOnOff.

Data Source

NodeB

Source Field

pmDelayDistributionSpi04

Source Section

HsDschResources

pmDelayDistrSpi04_06

Measurements to observe the distribution of the scheduling delay for scheduling priority class 00-15 on each subframe on those priority queue(s) selected for transmission. The scheduling

delay is counted as a percentage of schMaxdelay of each priority class and 3000 ms will be used as a schMaxDelay in case it is set to -1. Each counter observes a specific SPI. The different flows are configured ON/OFF using RBS MOM parameter IubDataStreams:: schHsFlowControlOnOff.

Data Source

NodeB

Source Field

pmDelayDistributionSpi04

Source Section

HsDschResources

pmDelayDistrSpi04_07

Measurements to observe the distribution of the scheduling delay for scheduling priority class 00-15 on each subframe on those priority queue(s) selected for transmission. The scheduling delay is counted as a percentage of schMaxdelay of each priority class and 3000 ms will be used as a schMaxDelay in case it is set to -1. Each counter observes a specific SPI. The different flows are configured ON/OFF using RBS MOM parameter IubDataStreams:: schHsFlowControlOnOff.

Data Source

NodeB

Source Field

pmDelayDistributionSpi04

Source Section

HsDschResources

pmDelayDistrSpi04_08

Measurements to observe the distribution of the scheduling delay for scheduling priority class 00-15 on each subframe on those priority queue(s) selected for transmission. The scheduling delay is counted as a percentage of schMaxdelay of each priority class and 3000 ms will be used as a schMaxDelay in case it is set to -1. Each counter observes a specific SPI. The different flows are configured ON/OFF using RBS MOM parameter IubDataStreams:: schHsFlowControlOnOff.

Data Source

NodeB

Source Field

pmDelayDistributionSpi04

Source Section

HsDschResources

pmDelayDistrSpi04_09

Measurements to observe the distribution of the scheduling delay for scheduling priority class 00-15 on each subframe on those priority queue(s) selected for transmission. The scheduling delay is counted as a percentage of schMaxdelay of each priority class and 3000 ms will be used as a schMaxDelay in case it is set to -1. Each counter observes a specific SPI. The different flows are configured ON/OFF using RBS MOM parameter IubDataStreams:: schHsFlowControlOnOff.

Data Source

NodeB

Source Field

pmDelayDistributionSpi04

Source Section

HsDschResources

pmDelayDistrSpi04_10

Measurements to observe the distribution of the scheduling delay for scheduling priority class 00-15 on each subframe on those priority queue(s) selected for transmission. The scheduling delay is counted as a percentage of schMaxdelay of each priority class and 3000 ms will be used as a schMaxDelay in case it is set to -1. Each counter observes a specific SPI. The different flows are configured ON/OFF using RBS MOM parameter IubDataStreams:: schHsFlowControlOnOff.

Data Source

NodeB

Source Field

pmDelayDistributionSpi04

Source Section

HsDschResources

pmDelayDistrSpi04_11

Measurements to observe the distribution of the scheduling delay for scheduling priority class 00-15 on each subframe on those priority queue(s) selected for transmission. The scheduling delay is counted as a percentage of schMaxdelay of each priority class and 3000 ms will be used as a schMaxDelay in case it is set to -1. Each counter observes a specific SPI. The different flows are configured ON/OFF using RBS MOM parameter IubDataStreams:: schHsFlowControlOnOff.

Data Source

NodeB

Source Field

pmDelayDistributionSpi04

Source Section

HsDschResources

pmDelayDistrSpi05_01

Measurements to observe the distribution of the scheduling delay for scheduling priority class 00-15 on each subframe on those priority queue(s) selected for transmission. The scheduling delay is counted as a percentage of schMaxdelay of each priority class and 3000 ms will be used as a schMaxDelay in case it is set to -1. Each counter observes a specific SPI. The different flows are configured ON/OFF using RBS MOM parameter IubDataStreams:: schHsFlowControlOnOff.

Data Source

NodeB

Source Field

pmDelayDistributionSpi05

Source Section

HsDschResources

pmDelayDistrSpi05_02

Measurements to observe the distribution of the scheduling delay for scheduling priority class 00-15 on each subframe on those priority queue(s) selected for transmission. The scheduling delay is counted as a percentage of schMaxdelay of each priority class and 3000 ms will be used as a schMaxDelay in case it is set to -1. Each counter observes a specific SPI. The different flows are configured ON/OFF using RBS MOM parameter IubDataStreams:: schHsFlowControlOnOff.

Data Source

NodeB

Source Field

pmDelayDistributionSpi05

Source Section

HsDschResources

pmDelayDistrSpi05_03

Measurements to observe the distribution of the scheduling delay for scheduling priority class 00-15 on each subframe on those priority queue(s) selected for transmission. The scheduling delay is counted as a percentage of schMaxdelay of each priority class and 3000 ms will be used as a schMaxDelay in case it is set to -1. Each counter observes a specific SPI. The different flows are configured ON/OFF using RBS MOM parameter IubDataStreams:: schHsFlowControlOnOff.

Data Source

NodeB

Source Field

pmDelayDistributionSpi05

Source Section

HsDschResources

pmDelayDistrSpi05_04

Measurements to observe the distribution of the scheduling delay for scheduling priority class 00-15 on each subframe on those priority queue(s) selected for transmission. The scheduling delay is counted as a percentage of schMaxdelay of each priority class and 3000 ms will be used as a schMaxDelay in case it is set to -1. Each counter observes a specific SPI. The different flows are configured ON/OFF using RBS MOM parameter IubDataStreams:: schHsFlowControlOnOff.

Data Source

NodeB

Source Field

pmDelayDistributionSpi05

Source Section

HsDschResources

pmDelayDistrSpi05_05

Measurements to observe the distribution of the scheduling delay for scheduling priority class 00-15 on each subframe on those priority queue(s) selected for transmission. The scheduling delay is counted as a percentage of schMaxdelay of each priority class and 3000 ms will be used as a schMaxDelay in case it is set to -1. Each counter observes a specific SPI. The different flows are configured ON/OFF using RBS MOM parameter IubDataStreams:: schHsFlowControlOnOff.

Data Source

NodeB

Source Field

pmDelayDistributionSpi05

Source Section

HsDschResources

pmDelayDistrSpi05_06

Measurements to observe the distribution of the scheduling delay for scheduling priority class 00-15 on each subframe on those priority queue(s) selected for transmission. The scheduling delay is counted as a percentage of schMaxdelay of each priority class and 3000 ms will be used as a schMaxDelay in case it is set to -1. Each counter observes a specific SPI. The different flows are configured ON/OFF using RBS MOM parameter IubDataStreams:: schHsFlowControlOnOff.

Data Source

NodeB

Source Field

pmDelayDistributionSpi05

Source Section

HsDschResources

pmDelayDistrSpi05_07

Measurements to observe the distribution of the scheduling delay for scheduling priority class 00-15 on each subframe on those priority queue(s) selected for transmission. The scheduling

delay is counted as a percentage of schMaxdelay of each priority class and 3000 ms will be used as a schMaxDelay in case it is set to -1. Each counter observes a specific SPI. The different flows are configured ON/OFF using RBS MOM parameter IubDataStreams:: schHsFlowControlOnOff.

Data Source

NodeB

Source Field

pmDelayDistributionSpi05

Source Section

HsDschResources

pmDelayDistrSpi05_08

Measurements to observe the distribution of the scheduling delay for scheduling priority class 00-15 on each subframe on those priority queue(s) selected for transmission. The scheduling delay is counted as a percentage of schMaxdelay of each priority class and 3000 ms will be used as a schMaxDelay in case it is set to -1. Each counter observes a specific SPI. The different flows are configured ON/OFF using RBS MOM parameter IubDataStreams:: schHsFlowControlOnOff.

Data Source

NodeB

Source Field

pmDelayDistributionSpi05

Source Section

HsDschResources

pmDelayDistrSpi05_09

Measurements to observe the distribution of the scheduling delay for scheduling priority class 00-15 on each subframe on those priority queue(s) selected for transmission. The scheduling delay is counted as a percentage of schMaxdelay of each priority class and 3000 ms will be used as a schMaxDelay in case it is set to -1. Each counter observes a specific SPI. The different flows are configured ON/OFF using RBS MOM parameter IubDataStreams:: schHsFlowControlOnOff.

Data Source

NodeB

Source Field

pmDelayDistributionSpi05

Source Section

HsDschResources

pmDelayDistrSpi05_10

Measurements to observe the distribution of the scheduling delay for scheduling priority class 00-15 on each subframe on those priority queue(s) selected for transmission. The scheduling delay is counted as a percentage of schMaxdelay of each priority class and 3000 ms will be used as a schMaxDelay in case it is set to -1. Each counter observes a specific SPI. The different flows are configured ON/OFF using RBS MOM parameter IubDataStreams:: schHsFlowControlOnOff.

Data Source

NodeB

Source Field

pmDelayDistributionSpi05

Source Section

HsDschResources

pmDelayDistrSpi05_11

Measurements to observe the distribution of the scheduling delay for scheduling priority class 00-15 on each subframe on those priority queue(s) selected for transmission. The scheduling delay is counted as a percentage of schMaxdelay of each priority class and 3000 ms will be used as a schMaxDelay in case it is set to -1. Each counter observes a specific SPI. The different flows are configured ON/OFF using RBS MOM parameter IubDataStreams:: schHsFlowControlOnOff.

Data Source

NodeB

Source Field

pmDelayDistributionSpi05

Source Section

HsDschResources

pmDelayDistrSpi06_01

Measurements to observe the distribution of the scheduling delay for scheduling priority class 00-15 on each subframe on those priority queue(s) selected for transmission. The scheduling delay is counted as a percentage of schMaxdelay of each priority class and 3000 ms will be used as a schMaxDelay in case it is set to -1. Each counter observes a specific SPI. The different flows are configured ON/OFF using RBS MOM parameter IubDataStreams:: schHsFlowControlOnOff.

Data Source

NodeB

Source Field

pmDelayDistributionSpi06

Source Section

HsDschResources

pmDelayDistrSpi06_02

Measurements to observe the distribution of the scheduling delay for scheduling priority class 00-15 on each subframe on those priority queue(s) selected for transmission. The scheduling delay is counted as a percentage of schMaxdelay of each priority class and 3000 ms will be used as a schMaxDelay in case it is set to -1. Each counter observes a specific SPI. The different flows are configured ON/OFF using RBS MOM parameter IubDataStreams:: schHsFlowControlOnOff.

Data Source

NodeB

Source Field

pmDelayDistributionSpi06

Source Section

HsDschResources

pmDelayDistrSpi06_03

Measurements to observe the distribution of the scheduling delay for scheduling priority class 00-15 on each subframe on those priority queue(s) selected for transmission. The scheduling delay is counted as a percentage of schMaxdelay of each priority class and 3000 ms will be used as a schMaxDelay in case it is set to -1. Each counter observes a specific SPI. The different flows are configured ON/OFF using RBS MOM parameter IubDataStreams:: schHsFlowControlOnOff.

Data Source

NodeB

Source Field

pmDelayDistributionSpi06

Source Section

HsDschResources

pmDelayDistrSpi06_04

Measurements to observe the distribution of the scheduling delay for scheduling priority class 00-15 on each subframe on those priority queue(s) selected for transmission. The scheduling delay is counted as a percentage of schMaxdelay of each priority class and 3000 ms will be used as a schMaxDelay in case it is set to -1. Each counter observes a specific SPI. The different flows are configured ON/OFF using RBS MOM parameter IubDataStreams:: schHsFlowControlOnOff.

Data Source

NodeB

Source Field

pmDelayDistributionSpi06

Source Section

HsDschResources

pmDelayDistrSpi06_05

Measurements to observe the distribution of the scheduling delay for scheduling priority class 00-15 on each subframe on those priority queue(s) selected for transmission. The scheduling delay is counted as a percentage of schMaxdelay of each priority class and 3000 ms will be used as a schMaxDelay in case it is set to -1. Each counter observes a specific SPI. The different flows are configured ON/OFF using RBS MOM parameter IubDataStreams:: schHsFlowControlOnOff.

Data Source

NodeB

Source Field

pmDelayDistributionSpi06

Source Section

HsDschResources

pmDelayDistrSpi06_06

Measurements to observe the distribution of the scheduling delay for scheduling priority class 00-15 on each subframe on those priority queue(s) selected for transmission. The scheduling delay is counted as a percentage of schMaxdelay of each priority class and 3000 ms will be used as a schMaxDelay in case it is set to -1. Each counter observes a specific SPI. The different flows are configured ON/OFF using RBS MOM parameter IubDataStreams:: schHsFlowControlOnOff.

Data Source

NodeB

Source Field

pmDelayDistributionSpi06

Source Section

HsDschResources

pmDelayDistrSpi06_07

Measurements to observe the distribution of the scheduling delay for scheduling priority class 00-15 on each subframe on those priority queue(s) selected for transmission. The scheduling delay is counted as a percentage of schMaxdelay of each priority class and 3000 ms will be used as a schMaxDelay in case it is set to -1. Each counter observes a specific SPI. The different flows are configured ON/OFF using RBS MOM parameter IubDataStreams:: schHsFlowControlOnOff.

Data Source

NodeB

Source Field

pmDelayDistributionSpi06

Source Section

HsDschResources

pmDelayDistrSpi06_08

Measurements to observe the distribution of the scheduling delay for scheduling priority class 00-15 on each subframe on those priority queue(s) selected for transmission. The scheduling

delay is counted as a percentage of schMaxdelay of each priority class and 3000 ms will be used as a schMaxDelay in case it is set to -1. Each counter observes a specific SPI. The different flows are configured ON/OFF using RBS MOM parameter IubDataStreams:: schHsFlowControlOnOff.

Data Source

NodeB

Source Field

pmDelayDistributionSpi06

Source Section

HsDschResources

pmDelayDistrSpi06_09

Measurements to observe the distribution of the scheduling delay for scheduling priority class 00-15 on each subframe on those priority queue(s) selected for transmission. The scheduling delay is counted as a percentage of schMaxdelay of each priority class and 3000 ms will be used as a schMaxDelay in case it is set to -1. Each counter observes a specific SPI. The different flows are configured ON/OFF using RBS MOM parameter IubDataStreams:: schHsFlowControlOnOff.

Data Source

NodeB

Source Field

pmDelayDistributionSpi06

Source Section

HsDschResources

pmDelayDistrSpi06_10

Measurements to observe the distribution of the scheduling delay for scheduling priority class 00-15 on each subframe on those priority queue(s) selected for transmission. The scheduling delay is counted as a percentage of schMaxdelay of each priority class and 3000 ms will be used as a schMaxDelay in case it is set to -1. Each counter observes a specific SPI. The different flows are configured ON/OFF using RBS MOM parameter IubDataStreams:: schHsFlowControlOnOff.

Data Source

NodeB

Source Field

pmDelayDistributionSpi06

Source Section

HsDschResources

pmDelayDistrSpi06_11

Measurements to observe the distribution of the scheduling delay for scheduling priority class 00-15 on each subframe on those priority queue(s) selected for transmission. The scheduling delay is counted as a percentage of schMaxdelay of each priority class and 3000 ms will be used as a schMaxDelay in case it is set to -1. Each counter observes a specific SPI. The different flows are configured ON/OFF using RBS MOM parameter IubDataStreams:: schHsFlowControlOnOff.

Data Source

NodeB

Source Field

pmDelayDistributionSpi06

Source Section

HsDschResources

pmDelayDistrSpi07_01

Measurements to observe the distribution of the scheduling delay for scheduling priority class 00-15 on each subframe on those priority queue(s) selected for transmission. The scheduling delay is counted as a percentage of schMaxdelay of each priority class and 3000 ms will be used as a schMaxDelay in case it is set to -1. Each counter observes a specific SPI. The different flows are configured ON/OFF using RBS MOM parameter IubDataStreams:: schHsFlowControlOnOff.

Data Source

NodeB

Source Field

pmDelayDistributionSpi07

Source Section

HsDschResources

pmDelayDistrSpi07_02

Measurements to observe the distribution of the scheduling delay for scheduling priority class 00-15 on each subframe on those priority queue(s) selected for transmission. The scheduling delay is counted as a percentage of schMaxdelay of each priority class and 3000 ms will be used as a schMaxDelay in case it is set to -1. Each counter observes a specific SPI. The different flows are configured ON/OFF using RBS MOM parameter IubDataStreams:: schHsFlowControlOnOff.

Data Source

NodeB

Source Field

pmDelayDistributionSpi07

Source Section

HsDschResources

pmDelayDistrSpi07_03

Measurements to observe the distribution of the scheduling delay for scheduling priority class 00-15 on each subframe on those priority queue(s) selected for transmission. The scheduling delay is counted as a percentage of schMaxdelay of each priority class and 3000 ms will be used as a schMaxDelay in case it is set to -1. Each counter observes a specific SPI. The different flows are configured ON/OFF using RBS MOM parameter IubDataStreams:: schHsFlowControlOnOff.

Data Source

NodeB

Source Field

pmDelayDistributionSpi07

Source Section

HsDschResources

pmDelayDistrSpi07_04

Measurements to observe the distribution of the scheduling delay for scheduling priority class 00-15 on each subframe on those priority queue(s) selected for transmission. The scheduling delay is counted as a percentage of schMaxdelay of each priority class and 3000 ms will be used as a schMaxDelay in case it is set to -1. Each counter observes a specific SPI. The different flows are configured ON/OFF using RBS MOM parameter IubDataStreams:: schHsFlowControlOnOff.

Data Source

NodeB

Source Field

pmDelayDistributionSpi07

Source Section

HsDschResources

pmDelayDistrSpi07_05

Measurements to observe the distribution of the scheduling delay for scheduling priority class 00-15 on each subframe on those priority queue(s) selected for transmission. The scheduling delay is counted as a percentage of schMaxdelay of each priority class and 3000 ms will be used as a schMaxDelay in case it is set to -1. Each counter observes a specific SPI. The different flows are configured ON/OFF using RBS MOM parameter IubDataStreams:: schHsFlowControlOnOff.

Data Source

NodeB

Source Field

pmDelayDistributionSpi07

Source Section

HsDschResources

pmDelayDistrSpi07_06

Measurements to observe the distribution of the scheduling delay for scheduling priority class 00-15 on each subframe on those priority queue(s) selected for transmission. The scheduling delay is counted as a percentage of schMaxdelay of each priority class and 3000 ms will be used as a schMaxDelay in case it is set to -1. Each counter observes a specific SPI. The different flows are configured ON/OFF using RBS MOM parameter IubDataStreams:: schHsFlowControlOnOff.

Data Source

NodeB

Source Field

pmDelayDistributionSpi07

Source Section

HsDschResources

pmDelayDistrSpi07_07

Measurements to observe the distribution of the scheduling delay for scheduling priority class 00-15 on each subframe on those priority queue(s) selected for transmission. The scheduling delay is counted as a percentage of schMaxdelay of each priority class and 3000 ms will be used as a schMaxDelay in case it is set to -1. Each counter observes a specific SPI. The different flows are configured ON/OFF using RBS MOM parameter IubDataStreams:: schHsFlowControlOnOff.

Data Source

NodeB

Source Field

pmDelayDistributionSpi07

Source Section

HsDschResources

pmDelayDistrSpi07_08

Measurements to observe the distribution of the scheduling delay for scheduling priority class 00-15 on each subframe on those priority queue(s) selected for transmission. The scheduling delay is counted as a percentage of schMaxdelay of each priority class and 3000 ms will be used as a schMaxDelay in case it is set to -1. Each counter observes a specific SPI. The different flows are configured ON/OFF using RBS MOM parameter IubDataStreams:: schHsFlowControlOnOff.

Data Source

NodeB

Source Field

pmDelayDistributionSpi07

Source Section

HsDschResources

pmDelayDistrSpi07_09

Measurements to observe the distribution of the scheduling delay for scheduling priority class 00-15 on each subframe on those priority queue(s) selected for transmission. The scheduling

delay is counted as a percentage of schMaxdelay of each priority class and 3000 ms will be used as a schMaxDelay in case it is set to -1. Each counter observes a specific SPI. The different flows are configured ON/OFF using RBS MOM parameter IubDataStreams:: schHsFlowControlOnOff.

Data Source

NodeB

Source Field

pmDelayDistributionSpi07

Source Section

HsDschResources

pmDelayDistrSpi07_10

Measurements to observe the distribution of the scheduling delay for scheduling priority class 00-15 on each subframe on those priority queue(s) selected for transmission. The scheduling delay is counted as a percentage of schMaxdelay of each priority class and 3000 ms will be used as a schMaxDelay in case it is set to -1. Each counter observes a specific SPI. The different flows are configured ON/OFF using RBS MOM parameter IubDataStreams:: schHsFlowControlOnOff.

Data Source

NodeB

Source Field

pmDelayDistributionSpi07

Source Section

HsDschResources

pmDelayDistrSpi07_11

Measurements to observe the distribution of the scheduling delay for scheduling priority class 00-15 on each subframe on those priority queue(s) selected for transmission. The scheduling delay is counted as a percentage of schMaxdelay of each priority class and 3000 ms will be used as a schMaxDelay in case it is set to -1. Each counter observes a specific SPI. The different flows are configured ON/OFF using RBS MOM parameter IubDataStreams:: schHsFlowControlOnOff.

Data Source

NodeB

Source Field

pmDelayDistributionSpi07

Source Section

HsDschResources

pmDelayDistrSpi08_01

Measurements to observe the distribution of the scheduling delay for scheduling priority class 00-15 on each subframe on those priority queue(s) selected for transmission. The scheduling delay is counted as a percentage of schMaxdelay of each priority class and 3000 ms will be used as a schMaxDelay in case it is set to -1. Each counter observes a specific SPI. The different flows are configured ON/OFF using RBS MOM parameter IubDataStreams:: schHsFlowControlOnOff.

Data Source

NodeB

Source Field

pmDelayDistributionSpi08

Source Section

HsDschResources

pmDelayDistrSpi08_02

Measurements to observe the distribution of the scheduling delay for scheduling priority class 00-15 on each subframe on those priority queue(s) selected for transmission. The scheduling delay is counted as a percentage of schMaxdelay of each priority class and 3000 ms will be used as a schMaxDelay in case it is set to -1. Each counter observes a specific SPI. The different flows are configured ON/OFF using RBS MOM parameter IubDataStreams:: schHsFlowControlOnOff.

Data Source

NodeB

Source Field

pmDelayDistributionSpi08

Source Section

HsDschResources

pmDelayDistrSpi08_03

Measurements to observe the distribution of the scheduling delay for scheduling priority class 00-15 on each subframe on those priority queue(s) selected for transmission. The scheduling delay is counted as a percentage of schMaxdelay of each priority class and 3000 ms will be used as a schMaxDelay in case it is set to -1. Each counter observes a specific SPI. The different flows are configured ON/OFF using RBS MOM parameter IubDataStreams:: schHsFlowControlOnOff.

Data Source

NodeB

Source Field

pmDelayDistributionSpi08

Source Section

HsDschResources

pmDelayDistrSpi08_04

Measurements to observe the distribution of the scheduling delay for scheduling priority class 00-15 on each subframe on those priority queue(s) selected for transmission. The scheduling delay is counted as a percentage of schMaxdelay of each priority class and 3000 ms will be used as a schMaxDelay in case it is set to -1. Each counter observes a specific SPI. The different flows are configured ON/OFF using RBS MOM parameter IubDataStreams:: schHsFlowControlOnOff.

Data Source

NodeB

Source Field

pmDelayDistributionSpi08

Source Section

HsDschResources

pmDelayDistrSpi08_05

Measurements to observe the distribution of the scheduling delay for scheduling priority class 00-15 on each subframe on those priority queue(s) selected for transmission. The scheduling delay is counted as a percentage of schMaxdelay of each priority class and 3000 ms will be used as a schMaxDelay in case it is set to -1. Each counter observes a specific SPI. The different flows are configured ON/OFF using RBS MOM parameter IubDataStreams:: schHsFlowControlOnOff.

Data Source

NodeB

Source Field

pmDelayDistributionSpi08

Source Section

HsDschResources

pmDelayDistrSpi08_06

Measurements to observe the distribution of the scheduling delay for scheduling priority class 00-15 on each subframe on those priority queue(s) selected for transmission. The scheduling delay is counted as a percentage of schMaxdelay of each priority class and 3000 ms will be used as a schMaxDelay in case it is set to -1. Each counter observes a specific SPI. The different flows are configured ON/OFF using RBS MOM parameter IubDataStreams:: schHsFlowControlOnOff.

Data Source

NodeB

Source Field

pmDelayDistributionSpi08

Source Section

HsDschResources

pmDelayDistrSpi08_07

Measurements to observe the distribution of the scheduling delay for scheduling priority class 00-15 on each subframe on those priority queue(s) selected for transmission. The scheduling delay is counted as a percentage of schMaxdelay of each priority class and 3000 ms will be used as a schMaxDelay in case it is set to -1. Each counter observes a specific SPI. The different flows are configured ON/OFF using RBS MOM parameter IubDataStreams:: schHsFlowControlOnOff.

Data Source

NodeB

Source Field

pmDelayDistributionSpi08

Source Section

HsDschResources

pmDelayDistrSpi08_08

Measurements to observe the distribution of the scheduling delay for scheduling priority class 00-15 on each subframe on those priority queue(s) selected for transmission. The scheduling delay is counted as a percentage of schMaxdelay of each priority class and 3000 ms will be used as a schMaxDelay in case it is set to -1. Each counter observes a specific SPI. The different flows are configured ON/OFF using RBS MOM parameter IubDataStreams:: schHsFlowControlOnOff.

Data Source

NodeB

Source Field

pmDelayDistributionSpi08

Source Section

HsDschResources

pmDelayDistrSpi08_09

Measurements to observe the distribution of the scheduling delay for scheduling priority class 00-15 on each subframe on those priority queue(s) selected for transmission. The scheduling delay is counted as a percentage of schMaxdelay of each priority class and 3000 ms will be used as a schMaxDelay in case it is set to -1. Each counter observes a specific SPI. The different flows are configured ON/OFF using RBS MOM parameter IubDataStreams:: schHsFlowControlOnOff.

Data Source

NodeB

Source Field

pmDelayDistributionSpi08

Source Section

HsDschResources

pmDelayDistrSpi08_10

Measurements to observe the distribution of the scheduling delay for scheduling priority class 00-15 on each subframe on those priority queue(s) selected for transmission. The scheduling

delay is counted as a percentage of schMaxdelay of each priority class and 3000 ms will be used as a schMaxDelay in case it is set to -1. Each counter observes a specific SPI. The different flows are configured ON/OFF using RBS MOM parameter IubDataStreams:: schHsFlowControlOnOff.

Data Source

NodeB

Source Field

pmDelayDistributionSpi08

Source Section

HsDschResources

pmDelayDistrSpi08_11

Measurements to observe the distribution of the scheduling delay for scheduling priority class 00-15 on each subframe on those priority queue(s) selected for transmission. The scheduling delay is counted as a percentage of schMaxdelay of each priority class and 3000 ms will be used as a schMaxDelay in case it is set to -1. Each counter observes a specific SPI. The different flows are configured ON/OFF using RBS MOM parameter IubDataStreams:: schHsFlowControlOnOff.

Data Source

NodeB

Source Field

pmDelayDistributionSpi08

Source Section

HsDschResources

pmDelayDistrSpi09_01

Measurements to observe the distribution of the scheduling delay for scheduling priority class 00-15 on each subframe on those priority queue(s) selected for transmission. The scheduling delay is counted as a percentage of schMaxdelay of each priority class and 3000 ms will be used as a schMaxDelay in case it is set to -1. Each counter observes a specific SPI. The different flows are configured ON/OFF using RBS MOM parameter IubDataStreams:: schHsFlowControlOnOff.

Data Source

NodeB

Source Field

pmDelayDistributionSpi09

Source Section

HsDschResources

pmDelayDistrSpi09_02

Measurements to observe the distribution of the scheduling delay for scheduling priority class 00-15 on each subframe on those priority queue(s) selected for transmission. The scheduling delay is counted as a percentage of schMaxdelay of each priority class and 3000 ms will be used as a schMaxDelay in case it is set to -1. Each counter observes a specific SPI. The different flows are configured ON/OFF using RBS MOM parameter IubDataStreams:: schHsFlowControlOnOff.

Data Source

NodeB

Source Field

pmDelayDistributionSpi09

Source Section

HsDschResources

pmDelayDistrSpi09_03

Measurements to observe the distribution of the scheduling delay for scheduling priority class 00-15 on each subframe on those priority queue(s) selected for transmission. The scheduling delay is counted as a percentage of schMaxdelay of each priority class and 3000 ms will be used as a schMaxDelay in case it is set to -1. Each counter observes a specific SPI. The different flows are configured ON/OFF using RBS MOM parameter IubDataStreams:: schHsFlowControlOnOff.

Data Source

NodeB

Source Field

pmDelayDistributionSpi09

Source Section

HsDschResources

pmDelayDistrSpi09_04

Measurements to observe the distribution of the scheduling delay for scheduling priority class 00-15 on each subframe on those priority queue(s) selected for transmission. The scheduling delay is counted as a percentage of schMaxdelay of each priority class and 3000 ms will be used as a schMaxDelay in case it is set to -1. Each counter observes a specific SPI. The different flows are configured ON/OFF using RBS MOM parameter IubDataStreams:: schHsFlowControlOnOff.

Data Source

NodeB

Source Field

pmDelayDistributionSpi09

Source Section

HsDschResources

pmDelayDistrSpi09_05

Measurements to observe the distribution of the scheduling delay for scheduling priority class 00-15 on each subframe on those priority queue(s) selected for transmission. The scheduling delay is counted as a percentage of schMaxdelay of each priority class and 3000 ms will be used as a schMaxDelay in case it is set to -1. Each counter observes a specific SPI. The different flows are configured ON/OFF using RBS MOM parameter IubDataStreams:: schHsFlowControlOnOff.

Data Source

NodeB

Source Field

pmDelayDistributionSpi09

Source Section

HsDschResources

pmDelayDistrSpi09_06

Measurements to observe the distribution of the scheduling delay for scheduling priority class 00-15 on each subframe on those priority queue(s) selected for transmission. The scheduling delay is counted as a percentage of schMaxdelay of each priority class and 3000 ms will be used as a schMaxDelay in case it is set to -1. Each counter observes a specific SPI. The different flows are configured ON/OFF using RBS MOM parameter IubDataStreams:: schHsFlowControlOnOff.

Data Source

NodeB

Source Field

pmDelayDistributionSpi09

Source Section

HsDschResources

pmDelayDistrSpi09_07

Measurements to observe the distribution of the scheduling delay for scheduling priority class 00-15 on each subframe on those priority queue(s) selected for transmission. The scheduling delay is counted as a percentage of schMaxdelay of each priority class and 3000 ms will be used as a schMaxDelay in case it is set to -1. Each counter observes a specific SPI. The different flows are configured ON/OFF using RBS MOM parameter IubDataStreams:: schHsFlowControlOnOff.

Data Source

NodeB

Source Field

pmDelayDistributionSpi09

Source Section

HsDschResources

pmDelayDistrSpi09_08

Measurements to observe the distribution of the scheduling delay for scheduling priority class 00-15 on each subframe on those priority queue(s) selected for transmission. The scheduling delay is counted as a percentage of schMaxdelay of each priority class and 3000 ms will be used as a schMaxDelay in case it is set to -1. Each counter observes a specific SPI. The different flows are configured ON/OFF using RBS MOM parameter IubDataStreams:: schHsFlowControlOnOff.

Data Source

NodeB

Source Field

pmDelayDistributionSpi09

Source Section

HsDschResources

pmDelayDistrSpi09_09

Measurements to observe the distribution of the scheduling delay for scheduling priority class 00-15 on each subframe on those priority queue(s) selected for transmission. The scheduling delay is counted as a percentage of schMaxdelay of each priority class and 3000 ms will be used as a schMaxDelay in case it is set to -1. Each counter observes a specific SPI. The different flows are configured ON/OFF using RBS MOM parameter IubDataStreams:: schHsFlowControlOnOff.

Data Source

NodeB

Source Field

pmDelayDistributionSpi09

Source Section

HsDschResources

pmDelayDistrSpi09_10

Measurements to observe the distribution of the scheduling delay for scheduling priority class 00-15 on each subframe on those priority queue(s) selected for transmission. The scheduling delay is counted as a percentage of schMaxdelay of each priority class and 3000 ms will be used as a schMaxDelay in case it is set to -1. Each counter observes a specific SPI. The different flows are configured ON/OFF using RBS MOM parameter IubDataStreams:: schHsFlowControlOnOff.

Data Source

NodeB

Source Field

pmDelayDistributionSpi09

Source Section

HsDschResources

pmDelayDistrSpi09_11

Measurements to observe the distribution of the scheduling delay for scheduling priority class 00-15 on each subframe on those priority queue(s) selected for transmission. The scheduling

delay is counted as a percentage of schMaxdelay of each priority class and 3000 ms will be used as a schMaxDelay in case it is set to -1. Each counter observes a specific SPI. The different flows are configured ON/OFF using RBS MOM parameter IubDataStreams:: schHsFlowControlOnOff.

Data Source

NodeB

Source Field

pmDelayDistributionSpi09

Source Section

HsDschResources

pmDelayDistrSpi10_01

Measurements to observe the distribution of the scheduling delay for scheduling priority class 00-15 on each subframe on those priority queue(s) selected for transmission. The scheduling delay is counted as a percentage of schMaxdelay of each priority class and 3000 ms will be used as a schMaxDelay in case it is set to -1. Each counter observes a specific SPI. The different flows are configured ON/OFF using RBS MOM parameter IubDataStreams:: schHsFlowControlOnOff.

Data Source

NodeB

Source Field

pmDelayDistributionSpi10

Source Section

HsDschResources

pmDelayDistrSpi10_02

Measurements to observe the distribution of the scheduling delay for scheduling priority class 00-15 on each subframe on those priority queue(s) selected for transmission. The scheduling delay is counted as a percentage of schMaxdelay of each priority class and 3000 ms will be used as a schMaxDelay in case it is set to -1. Each counter observes a specific SPI. The different flows are configured ON/OFF using RBS MOM parameter IubDataStreams:: schHsFlowControlOnOff.

Data Source

NodeB

Source Field

pmDelayDistributionSpi10

Source Section

HsDschResources

pmDelayDistrSpi10_03

Measurements to observe the distribution of the scheduling delay for scheduling priority class 00-15 on each subframe on those priority queue(s) selected for transmission. The scheduling delay is counted as a percentage of schMaxdelay of each priority class and 3000 ms will be used as a schMaxDelay in case it is set to -1. Each counter observes a specific SPI. The different flows are configured ON/OFF using RBS MOM parameter IubDataStreams:: schHsFlowControlOnOff.

Data Source

NodeB

Source Field

pmDelayDistributionSpi10

Source Section

HsDschResources

pmDelayDistrSpi10_04

Measurements to observe the distribution of the scheduling delay for scheduling priority class 00-15 on each subframe on those priority queue(s) selected for transmission. The scheduling delay is counted as a percentage of schMaxdelay of each priority class and 3000 ms will be used as a schMaxDelay in case it is set to -1. Each counter observes a specific SPI. The different flows are configured ON/OFF using RBS MOM parameter IubDataStreams:: schHsFlowControlOnOff.

Data Source

NodeB

Source Field

pmDelayDistributionSpi10

Source Section

HsDschResources

pmDelayDistrSpi10_05

Measurements to observe the distribution of the scheduling delay for scheduling priority class 00-15 on each subframe on those priority queue(s) selected for transmission. The scheduling delay is counted as a percentage of schMaxdelay of each priority class and 3000 ms will be used as a schMaxDelay in case it is set to -1. Each counter observes a specific SPI. The different flows are configured ON/OFF using RBS MOM parameter IubDataStreams:: schHsFlowControlOnOff.

Data Source

NodeB

Source Field

pmDelayDistributionSpi10

Source Section

HsDschResources

pmDelayDistrSpi10_06

Measurements to observe the distribution of the scheduling delay for scheduling priority class 00-15 on each subframe on those priority queue(s) selected for transmission. The scheduling delay is counted as a percentage of schMaxdelay of each priority class and 3000 ms will be used as a schMaxDelay in case it is set to -1. Each counter observes a specific SPI. The different flows are configured ON/OFF using RBS MOM parameter IubDataStreams:: schHsFlowControlOnOff.

Data Source

NodeB

Source Field

pmDelayDistributionSpi10

Source Section

HsDschResources

pmDelayDistrSpi10_07

Measurements to observe the distribution of the scheduling delay for scheduling priority class 00-15 on each subframe on those priority queue(s) selected for transmission. The scheduling delay is counted as a percentage of schMaxdelay of each priority class and 3000 ms will be used as a schMaxDelay in case it is set to -1. Each counter observes a specific SPI. The different flows are configured ON/OFF using RBS MOM parameter IubDataStreams:: schHsFlowControlOnOff.

Data Source

NodeB

Source Field

pmDelayDistributionSpi10

Source Section

HsDschResources

pmDelayDistrSpi10_08

Measurements to observe the distribution of the scheduling delay for scheduling priority class 00-15 on each subframe on those priority queue(s) selected for transmission. The scheduling delay is counted as a percentage of schMaxdelay of each priority class and 3000 ms will be used as a schMaxDelay in case it is set to -1. Each counter observes a specific SPI. The different flows are configured ON/OFF using RBS MOM parameter IubDataStreams:: schHsFlowControlOnOff.

Data Source

NodeB

Source Field

pmDelayDistributionSpi10

Source Section

HsDschResources

pmDelayDistrSpi10_09

Measurements to observe the distribution of the scheduling delay for scheduling priority class 00-15 on each subframe on those priority queue(s) selected for transmission. The scheduling delay is counted as a percentage of schMaxdelay of each priority class and 3000 ms will be used as a schMaxDelay in case it is set to -1. Each counter observes a specific SPI. The different flows are configured ON/OFF using RBS MOM parameter IubDataStreams:: schHsFlowControlOnOff.

Data Source

NodeB

Source Field

pmDelayDistributionSpi10

Source Section

HsDschResources

pmDelayDistrSpi10_10

Measurements to observe the distribution of the scheduling delay for scheduling priority class 00-15 on each subframe on those priority queue(s) selected for transmission. The scheduling delay is counted as a percentage of schMaxdelay of each priority class and 3000 ms will be used as a schMaxDelay in case it is set to -1. Each counter observes a specific SPI. The different flows are configured ON/OFF using RBS MOM parameter IubDataStreams:: schHsFlowControlOnOff.

Data Source

NodeB

Source Field

pmDelayDistributionSpi10

Source Section

HsDschResources

pmDelayDistrSpi10_11

Measurements to observe the distribution of the scheduling delay for scheduling priority class 00-15 on each subframe on those priority queue(s) selected for transmission. The scheduling delay is counted as a percentage of schMaxdelay of each priority class and 3000 ms will be used as a schMaxDelay in case it is set to -1. Each counter observes a specific SPI. The different flows are configured ON/OFF using RBS MOM parameter IubDataStreams:: schHsFlowControlOnOff.

Data Source

NodeB

Source Field

pmDelayDistributionSpi10

Source Section

HsDschResources

pmDelayDistrSpi11_01

Measurements to observe the distribution of the scheduling delay for scheduling priority class 00-15 on each subframe on those priority queue(s) selected for transmission. The scheduling

delay is counted as a percentage of schMaxdelay of each priority class and 3000 ms will be used as a schMaxDelay in case it is set to -1. Each counter observes a specific SPI. The different flows are configured ON/OFF using RBS MOM parameter IubDataStreams:: schHsFlowControlOnOff.

Data Source

NodeB

Source Field

pmDelayDistributionSpi11

Source Section

HsDschResources

pmDelayDistrSpi11_02

Measurements to observe the distribution of the scheduling delay for scheduling priority class 00-15 on each subframe on those priority queue(s) selected for transmission. The scheduling delay is counted as a percentage of schMaxdelay of each priority class and 3000 ms will be used as a schMaxDelay in case it is set to -1. Each counter observes a specific SPI. The different flows are configured ON/OFF using RBS MOM parameter IubDataStreams:: schHsFlowControlOnOff.

Data Source

NodeB

Source Field

pmDelayDistributionSpi11

Source Section

HsDschResources

pmDelayDistrSpi11_03

Measurements to observe the distribution of the scheduling delay for scheduling priority class 00-15 on each subframe on those priority queue(s) selected for transmission. The scheduling delay is counted as a percentage of schMaxdelay of each priority class and 3000 ms will be used as a schMaxDelay in case it is set to -1. Each counter observes a specific SPI. The different flows are configured ON/OFF using RBS MOM parameter IubDataStreams:: schHsFlowControlOnOff.

Data Source

NodeB

Source Field

pmDelayDistributionSpi11

Source Section

HsDschResources

pmDelayDistrSpi11_04

Measurements to observe the distribution of the scheduling delay for scheduling priority class 00-15 on each subframe on those priority queue(s) selected for transmission. The scheduling delay is counted as a percentage of schMaxdelay of each priority class and 3000 ms will be used as a schMaxDelay in case it is set to -1. Each counter observes a specific SPI. The different flows are configured ON/OFF using RBS MOM parameter IubDataStreams:: schHsFlowControlOnOff.

Data Source

NodeB

Source Field

pmDelayDistributionSpi11

Source Section

HsDschResources

pmDelayDistrSpi11_05

Measurements to observe the distribution of the scheduling delay for scheduling priority class 00-15 on each subframe on those priority queue(s) selected for transmission. The scheduling delay is counted as a percentage of schMaxdelay of each priority class and 3000 ms will be used as a schMaxDelay in case it is set to -1. Each counter observes a specific SPI. The different flows are configured ON/OFF using RBS MOM parameter IubDataStreams:: schHsFlowControlOnOff.

Data Source

NodeB

Source Field

pmDelayDistributionSpi11

Source Section

HsDschResources

pmDelayDistrSpi11_06

Measurements to observe the distribution of the scheduling delay for scheduling priority class 00-15 on each subframe on those priority queue(s) selected for transmission. The scheduling delay is counted as a percentage of schMaxdelay of each priority class and 3000 ms will be used as a schMaxDelay in case it is set to -1. Each counter observes a specific SPI. The different flows are configured ON/OFF using RBS MOM parameter IubDataStreams:: schHsFlowControlOnOff.

Data Source

NodeB

Source Field

pmDelayDistributionSpi11

Source Section

HsDschResources

pmDelayDistrSpi11_07

Measurements to observe the distribution of the scheduling delay for scheduling priority class 00-15 on each subframe on those priority queue(s) selected for transmission. The scheduling delay is counted as a percentage of schMaxdelay of each priority class and 3000 ms will be used as a schMaxDelay in case it is set to -1. Each counter observes a specific SPI. The different flows are configured ON/OFF using RBS MOM parameter IubDataStreams:: schHsFlowControlOnOff.

Data Source

NodeB

Source Field

pmDelayDistributionSpi11

Source Section

HsDschResources

pmDelayDistrSpi11_08

Measurements to observe the distribution of the scheduling delay for scheduling priority class 00-15 on each subframe on those priority queue(s) selected for transmission. The scheduling delay is counted as a percentage of schMaxdelay of each priority class and 3000 ms will be used as a schMaxDelay in case it is set to -1. Each counter observes a specific SPI. The different flows are configured ON/OFF using RBS MOM parameter IubDataStreams:: schHsFlowControlOnOff.

Data Source

NodeB

Source Field

pmDelayDistributionSpi11

Source Section

HsDschResources

pmDelayDistrSpi11_09

Measurements to observe the distribution of the scheduling delay for scheduling priority class 00-15 on each subframe on those priority queue(s) selected for transmission. The scheduling delay is counted as a percentage of schMaxdelay of each priority class and 3000 ms will be used as a schMaxDelay in case it is set to -1. Each counter observes a specific SPI. The different flows are configured ON/OFF using RBS MOM parameter IubDataStreams:: schHsFlowControlOnOff.

Data Source

NodeB

Source Field

pmDelayDistributionSpi11

Source Section

HsDschResources

pmDelayDistrSpi11_10

Measurements to observe the distribution of the scheduling delay for scheduling priority class 00-15 on each subframe on those priority queue(s) selected for transmission. The scheduling delay is counted as a percentage of schMaxdelay of each priority class and 3000 ms will be used as a schMaxDelay in case it is set to -1. Each counter observes a specific SPI. The different flows are configured ON/OFF using RBS MOM parameter IubDataStreams:: schHsFlowControlOnOff.

Data Source

NodeB

Source Field

pmDelayDistributionSpi11

Source Section

HsDschResources

pmDelayDistrSpi11_11

Measurements to observe the distribution of the scheduling delay for scheduling priority class 00-15 on each subframe on those priority queue(s) selected for transmission. The scheduling delay is counted as a percentage of schMaxdelay of each priority class and 3000 ms will be used as a schMaxDelay in case it is set to -1. Each counter observes a specific SPI. The different flows are configured ON/OFF using RBS MOM parameter IubDataStreams:: schHsFlowControlOnOff.

Data Source

NodeB

Source Field

pmDelayDistributionSpi11

Source Section

HsDschResources

pmDelayDistrSpi12_01

Measurements to observe the distribution of the scheduling delay for scheduling priority class 00-15 on each subframe on those priority queue(s) selected for transmission. The scheduling delay is counted as a percentage of schMaxdelay of each priority class and 3000 ms will be used as a schMaxDelay in case it is set to -1. Each counter observes a specific SPI. The different flows are configured ON/OFF using RBS MOM parameter IubDataStreams:: schHsFlowControlOnOff.

Data Source

NodeB

Source Field

pmDelayDistributionSpi12

Source Section

HsDschResources

pmDelayDistrSpi12_02

Measurements to observe the distribution of the scheduling delay for scheduling priority class 00-15 on each subframe on those priority queue(s) selected for transmission. The scheduling

delay is counted as a percentage of schMaxdelay of each priority class and 3000 ms will be used as a schMaxDelay in case it is set to -1. Each counter observes a specific SPI. The different flows are configured ON/OFF using RBS MOM parameter IubDataStreams:: schHsFlowControlOnOff.

Data Source

NodeB

Source Field

pmDelayDistributionSpi12

Source Section

HsDschResources

pmDelayDistrSpi12_03

Measurements to observe the distribution of the scheduling delay for scheduling priority class 00-15 on each subframe on those priority queue(s) selected for transmission. The scheduling delay is counted as a percentage of schMaxdelay of each priority class and 3000 ms will be used as a schMaxDelay in case it is set to -1. Each counter observes a specific SPI. The different flows are configured ON/OFF using RBS MOM parameter IubDataStreams:: schHsFlowControlOnOff.

Data Source

NodeB

Source Field

pmDelayDistributionSpi12

Source Section

HsDschResources

pmDelayDistrSpi12_04

Measurements to observe the distribution of the scheduling delay for scheduling priority class 00-15 on each subframe on those priority queue(s) selected for transmission. The scheduling delay is counted as a percentage of schMaxdelay of each priority class and 3000 ms will be used as a schMaxDelay in case it is set to -1. Each counter observes a specific SPI. The different flows are configured ON/OFF using RBS MOM parameter IubDataStreams:: schHsFlowControlOnOff.

Data Source

NodeB

Source Field

pmDelayDistributionSpi12

Source Section

HsDschResources

pmDelayDistrSpi12_05

Measurements to observe the distribution of the scheduling delay for scheduling priority class 00-15 on each subframe on those priority queue(s) selected for transmission. The scheduling delay is counted as a percentage of schMaxdelay of each priority class and 3000 ms will be used as a schMaxDelay in case it is set to -1. Each counter observes a specific SPI. The different flows are configured ON/OFF using RBS MOM parameter IubDataStreams:: schHsFlowControlOnOff.

Data Source

NodeB

Source Field

pmDelayDistributionSpi12

Source Section

HsDschResources

pmDelayDistrSpi12_06

Measurements to observe the distribution of the scheduling delay for scheduling priority class 00-15 on each subframe on those priority queue(s) selected for transmission. The scheduling delay is counted as a percentage of schMaxdelay of each priority class and 3000 ms will be used as a schMaxDelay in case it is set to -1. Each counter observes a specific SPI. The different flows are configured ON/OFF using RBS MOM parameter IubDataStreams:: schHsFlowControlOnOff.

Data Source

NodeB

Source Field

pmDelayDistributionSpi12

Source Section

HsDschResources

pmDelayDistrSpi12_07

Measurements to observe the distribution of the scheduling delay for scheduling priority class 00-15 on each subframe on those priority queue(s) selected for transmission. The scheduling delay is counted as a percentage of schMaxdelay of each priority class and 3000 ms will be used as a schMaxDelay in case it is set to -1. Each counter observes a specific SPI. The different flows are configured ON/OFF using RBS MOM parameter IubDataStreams:: schHsFlowControlOnOff.

Data Source

NodeB

Source Field

pmDelayDistributionSpi12

Source Section

HsDschResources

pmDelayDistrSpi12_08

Measurements to observe the distribution of the scheduling delay for scheduling priority class 00-15 on each subframe on those priority queue(s) selected for transmission. The scheduling delay is counted as a percentage of schMaxdelay of each priority class and 3000 ms will be used as a schMaxDelay in case it is set to -1. Each counter observes a specific SPI. The different flows are configured ON/OFF using RBS MOM parameter IubDataStreams:: schHsFlowControlOnOff.

Data Source

NodeB

Source Field

pmDelayDistributionSpi12

Source Section

HsDschResources

pmDelayDistrSpi12_09

Measurements to observe the distribution of the scheduling delay for scheduling priority class 00-15 on each subframe on those priority queue(s) selected for transmission. The scheduling delay is counted as a percentage of schMaxdelay of each priority class and 3000 ms will be used as a schMaxDelay in case it is set to -1. Each counter observes a specific SPI. The different flows are configured ON/OFF using RBS MOM parameter IubDataStreams:: schHsFlowControlOnOff.

Data Source

NodeB

Source Field

pmDelayDistributionSpi12

Source Section

HsDschResources

pmDelayDistrSpi12_10

Measurements to observe the distribution of the scheduling delay for scheduling priority class 00-15 on each subframe on those priority queue(s) selected for transmission. The scheduling delay is counted as a percentage of schMaxdelay of each priority class and 3000 ms will be used as a schMaxDelay in case it is set to -1. Each counter observes a specific SPI. The different flows are configured ON/OFF using RBS MOM parameter IubDataStreams:: schHsFlowControlOnOff.

Data Source

NodeB

Source Field

pmDelayDistributionSpi12

Source Section

HsDschResources

pmDelayDistrSpi12_11

Measurements to observe the distribution of the scheduling delay for scheduling priority class 00-15 on each subframe on those priority queue(s) selected for transmission. The scheduling delay is counted as a percentage of schMaxdelay of each priority class and 3000 ms will be used as a schMaxDelay in case it is set to -1. Each counter observes a specific SPI. The different flows are configured ON/OFF using RBS MOM parameter IubDataStreams:: schHsFlowControlOnOff.

Data Source

NodeB

Source Field

pmDelayDistributionSpi12

Source Section

HsDschResources

pmDelayDistrSpi13_01

Measurements to observe the distribution of the scheduling delay for scheduling priority class 00-15 on each subframe on those priority queue(s) selected for transmission. The scheduling delay is counted as a percentage of schMaxdelay of each priority class and 3000 ms will be used as a schMaxDelay in case it is set to -1. Each counter observes a specific SPI. The different flows are configured ON/OFF using RBS MOM parameter IubDataStreams:: schHsFlowControlOnOff.

Data Source

NodeB

Source Field

pmDelayDistributionSpi13

Source Section

HsDschResources

pmDelayDistrSpi13_02

Measurements to observe the distribution of the scheduling delay for scheduling priority class 00-15 on each subframe on those priority queue(s) selected for transmission. The scheduling delay is counted as a percentage of schMaxdelay of each priority class and 3000 ms will be used as a schMaxDelay in case it is set to -1. Each counter observes a specific SPI. The different flows are configured ON/OFF using RBS MOM parameter IubDataStreams:: schHsFlowControlOnOff.

Data Source

NodeB

Source Field

pmDelayDistributionSpi13

Source Section

HsDschResources

pmDelayDistrSpi13_03

Measurements to observe the distribution of the scheduling delay for scheduling priority class 00-15 on each subframe on those priority queue(s) selected for transmission. The scheduling

delay is counted as a percentage of schMaxdelay of each priority class and 3000 ms will be used as a schMaxDelay in case it is set to -1. Each counter observes a specific SPI. The different flows are configured ON/OFF using RBS MOM parameter IubDataStreams:: schHsFlowControlOnOff.

Data Source

NodeB

Source Field

pmDelayDistributionSpi13

Source Section

HsDschResources

pmDelayDistrSpi13_04

Measurements to observe the distribution of the scheduling delay for scheduling priority class 00-15 on each subframe on those priority queue(s) selected for transmission. The scheduling delay is counted as a percentage of schMaxdelay of each priority class and 3000 ms will be used as a schMaxDelay in case it is set to -1. Each counter observes a specific SPI. The different flows are configured ON/OFF using RBS MOM parameter IubDataStreams:: schHsFlowControlOnOff.

Data Source

NodeB

Source Field

pmDelayDistributionSpi13

Source Section

HsDschResources

pmDelayDistrSpi13_05

Measurements to observe the distribution of the scheduling delay for scheduling priority class 00-15 on each subframe on those priority queue(s) selected for transmission. The scheduling delay is counted as a percentage of schMaxdelay of each priority class and 3000 ms will be used as a schMaxDelay in case it is set to -1. Each counter observes a specific SPI. The different flows are configured ON/OFF using RBS MOM parameter IubDataStreams:: schHsFlowControlOnOff.

Data Source

NodeB

Source Field

pmDelayDistributionSpi13

Source Section

HsDschResources

pmDelayDistrSpi13_06

Measurements to observe the distribution of the scheduling delay for scheduling priority class 00-15 on each subframe on those priority queue(s) selected for transmission. The scheduling delay is counted as a percentage of schMaxdelay of each priority class and 3000 ms will be used as a schMaxDelay in case it is set to -1. Each counter observes a specific SPI. The different flows are configured ON/OFF using RBS MOM parameter IubDataStreams:: schHsFlowControlOnOff.

Data Source

NodeB

Source Field

pmDelayDistributionSpi13

Source Section

HsDschResources

pmDelayDistrSpi13_07

Measurements to observe the distribution of the scheduling delay for scheduling priority class 00-15 on each subframe on those priority queue(s) selected for transmission. The scheduling delay is counted as a percentage of schMaxdelay of each priority class and 3000 ms will be used as a schMaxDelay in case it is set to -1. Each counter observes a specific SPI. The different flows are configured ON/OFF using RBS MOM parameter IubDataStreams:: schHsFlowControlOnOff.

Data Source

NodeB

Source Field

pmDelayDistributionSpi13

Source Section

HsDschResources

pmDelayDistrSpi13_08

Measurements to observe the distribution of the scheduling delay for scheduling priority class 00-15 on each subframe on those priority queue(s) selected for transmission. The scheduling delay is counted as a percentage of schMaxdelay of each priority class and 3000 ms will be used as a schMaxDelay in case it is set to -1. Each counter observes a specific SPI. The different flows are configured ON/OFF using RBS MOM parameter IubDataStreams:: schHsFlowControlOnOff.

Data Source

NodeB

Source Field

pmDelayDistributionSpi13

Source Section

HsDschResources

pmDelayDistrSpi13_09

Measurements to observe the distribution of the scheduling delay for scheduling priority class 00-15 on each subframe on those priority queue(s) selected for transmission. The scheduling delay is counted as a percentage of schMaxdelay of each priority class and 3000 ms will be used as a schMaxDelay in case it is set to -1. Each counter observes a specific SPI. The different flows are configured ON/OFF using RBS MOM parameter IubDataStreams:: schHsFlowControlOnOff.

Data Source

NodeB

Source Field

pmDelayDistributionSpi13

Source Section

HsDschResources

pmDelayDistrSpi13_10

Measurements to observe the distribution of the scheduling delay for scheduling priority class 00-15 on each subframe on those priority queue(s) selected for transmission. The scheduling delay is counted as a percentage of schMaxdelay of each priority class and 3000 ms will be used as a schMaxDelay in case it is set to -1. Each counter observes a specific SPI. The different flows are configured ON/OFF using RBS MOM parameter IubDataStreams:: schHsFlowControlOnOff.

Data Source

NodeB

Source Field

pmDelayDistributionSpi13

Source Section

HsDschResources

pmDelayDistrSpi13_11

Measurements to observe the distribution of the scheduling delay for scheduling priority class 00-15 on each subframe on those priority queue(s) selected for transmission. The scheduling delay is counted as a percentage of schMaxdelay of each priority class and 3000 ms will be used as a schMaxDelay in case it is set to -1. Each counter observes a specific SPI. The different flows are configured ON/OFF using RBS MOM parameter IubDataStreams:: schHsFlowControlOnOff.

Data Source

NodeB

Source Field

pmDelayDistributionSpi13

Source Section

HsDschResources

pmDelayDistrSpi14_01

Measurements to observe the distribution of the scheduling delay for scheduling priority class 00-15 on each subframe on those priority queue(s) selected for transmission. The scheduling delay is counted as a percentage of schMaxdelay of each priority class and 3000 ms will be used as a schMaxDelay in case it is set to -1. Each counter observes a specific SPI. The different flows are configured ON/OFF using RBS MOM parameter IubDataStreams:: schHsFlowControlOnOff.

Data Source

NodeB

Source Field

pmDelayDistributionSpi14

Source Section

HsDschResources

pmDelayDistrSpi14_02

Measurements to observe the distribution of the scheduling delay for scheduling priority class 00-15 on each subframe on those priority queue(s) selected for transmission. The scheduling delay is counted as a percentage of schMaxdelay of each priority class and 3000 ms will be used as a schMaxDelay in case it is set to -1. Each counter observes a specific SPI. The different flows are configured ON/OFF using RBS MOM parameter IubDataStreams:: schHsFlowControlOnOff.

Data Source

NodeB

Source Field

pmDelayDistributionSpi14

Source Section

HsDschResources

pmDelayDistrSpi14_03

Measurements to observe the distribution of the scheduling delay for scheduling priority class 00-15 on each subframe on those priority queue(s) selected for transmission. The scheduling delay is counted as a percentage of schMaxdelay of each priority class and 3000 ms will be used as a schMaxDelay in case it is set to -1. Each counter observes a specific SPI. The different flows are configured ON/OFF using RBS MOM parameter IubDataStreams:: schHsFlowControlOnOff.

Data Source

NodeB

Source Field

pmDelayDistributionSpi14

Source Section

HsDschResources

pmDelayDistrSpi14_04

Measurements to observe the distribution of the scheduling delay for scheduling priority class 00-15 on each subframe on those priority queue(s) selected for transmission. The scheduling

delay is counted as a percentage of schMaxdelay of each priority class and 3000 ms will be used as a schMaxDelay in case it is set to -1. Each counter observes a specific SPI. The different flows are configured ON/OFF using RBS MOM parameter IubDataStreams:: schHsFlowControlOnOff.

Data Source

NodeB

Source Field

pmDelayDistributionSpi14

Source Section

HsDschResources

pmDelayDistrSpi14_05

Measurements to observe the distribution of the scheduling delay for scheduling priority class 00-15 on each subframe on those priority queue(s) selected for transmission. The scheduling delay is counted as a percentage of schMaxdelay of each priority class and 3000 ms will be used as a schMaxDelay in case it is set to -1. Each counter observes a specific SPI. The different flows are configured ON/OFF using RBS MOM parameter IubDataStreams:: schHsFlowControlOnOff.

Data Source

NodeB

Source Field

pmDelayDistributionSpi14

Source Section

HsDschResources

pmDelayDistrSpi14_06

Measurements to observe the distribution of the scheduling delay for scheduling priority class 00-15 on each subframe on those priority queue(s) selected for transmission. The scheduling delay is counted as a percentage of schMaxdelay of each priority class and 3000 ms will be used as a schMaxDelay in case it is set to -1. Each counter observes a specific SPI. The different flows are configured ON/OFF using RBS MOM parameter IubDataStreams:: schHsFlowControlOnOff.

Data Source

NodeB

Source Field

pmDelayDistributionSpi14

Source Section

HsDschResources

pmDelayDistrSpi14_07

Measurements to observe the distribution of the scheduling delay for scheduling priority class 00-15 on each subframe on those priority queue(s) selected for transmission. The scheduling delay is counted as a percentage of schMaxdelay of each priority class and 3000 ms will be used as a schMaxDelay in case it is set to -1. Each counter observes a specific SPI. The different flows are configured ON/OFF using RBS MOM parameter IubDataStreams:: schHsFlowControlOnOff.

Data Source

NodeB

Source Field

pmDelayDistributionSpi14

Source Section

HsDschResources

pmDelayDistrSpi14_08

Measurements to observe the distribution of the scheduling delay for scheduling priority class 00-15 on each subframe on those priority queue(s) selected for transmission. The scheduling delay is counted as a percentage of schMaxdelay of each priority class and 3000 ms will be used as a schMaxDelay in case it is set to -1. Each counter observes a specific SPI. The different flows are configured ON/OFF using RBS MOM parameter IubDataStreams:: schHsFlowControlOnOff.

Data Source

NodeB

Source Field

pmDelayDistributionSpi14

Source Section

HsDschResources

pmDelayDistrSpi14_09

Measurements to observe the distribution of the scheduling delay for scheduling priority class 00-15 on each subframe on those priority queue(s) selected for transmission. The scheduling delay is counted as a percentage of schMaxdelay of each priority class and 3000 ms will be used as a schMaxDelay in case it is set to -1. Each counter observes a specific SPI. The different flows are configured ON/OFF using RBS MOM parameter IubDataStreams:: schHsFlowControlOnOff.

Data Source

NodeB

Source Field

pmDelayDistributionSpi14

Source Section

HsDschResources

pmDelayDistrSpi14_10

Measurements to observe the distribution of the scheduling delay for scheduling priority class 00-15 on each subframe on those priority queue(s) selected for transmission. The scheduling delay is counted as a percentage of schMaxdelay of each priority class and 3000 ms will be used as a schMaxDelay in case it is set to -1. Each counter observes a specific SPI. The different flows are configured ON/OFF using RBS MOM parameter IubDataStreams:: schHsFlowControlOnOff.

Data Source

NodeB

Source Field

pmDelayDistributionSpi14

Source Section

HsDschResources

pmDelayDistrSpi14_11

Measurements to observe the distribution of the scheduling delay for scheduling priority class 00-15 on each subframe on those priority queue(s) selected for transmission. The scheduling delay is counted as a percentage of schMaxdelay of each priority class and 3000 ms will be used as a schMaxDelay in case it is set to -1. Each counter observes a specific SPI. The different flows are configured ON/OFF using RBS MOM parameter IubDataStreams:: schHsFlowControlOnOff.

Data Source

NodeB

Source Field

pmDelayDistributionSpi14

Source Section

HsDschResources

pmDelayDistrSpi15_01

Measurements to observe the distribution of the scheduling delay for scheduling priority class 00-15 on each subframe on those priority queue(s) selected for transmission. The scheduling delay is counted as a percentage of schMaxdelay of each priority class and 3000 ms will be used as a schMaxDelay in case it is set to -1. Each counter observes a specific SPI. The different flows are configured ON/OFF using RBS MOM parameter IubDataStreams:: schHsFlowControlOnOff.

Data Source

NodeB

Source Field

pmDelayDistributionSpi15

Source Section

HsDschResources

pmDelayDistrSpi15_02

Measurements to observe the distribution of the scheduling delay for scheduling priority class 00-15 on each subframe on those priority queue(s) selected for transmission. The scheduling delay is counted as a percentage of schMaxdelay of each priority class and 3000 ms will be used as a schMaxDelay in case it is set to -1. Each counter observes a specific SPI. The different flows are configured ON/OFF using RBS MOM parameter IubDataStreams:: schHsFlowControlOnOff.

Data Source

NodeB

Source Field

pmDelayDistributionSpi15

Source Section

HsDschResources

pmDelayDistrSpi15_03

Measurements to observe the distribution of the scheduling delay for scheduling priority class 00-15 on each subframe on those priority queue(s) selected for transmission. The scheduling delay is counted as a percentage of schMaxdelay of each priority class and 3000 ms will be used as a schMaxDelay in case it is set to -1. Each counter observes a specific SPI. The different flows are configured ON/OFF using RBS MOM parameter IubDataStreams:: schHsFlowControlOnOff.

Data Source

NodeB

Source Field

pmDelayDistributionSpi15

Source Section

HsDschResources

pmDelayDistrSpi15_04

Measurements to observe the distribution of the scheduling delay for scheduling priority class 00-15 on each subframe on those priority queue(s) selected for transmission. The scheduling delay is counted as a percentage of schMaxdelay of each priority class and 3000 ms will be used as a schMaxDelay in case it is set to -1. Each counter observes a specific SPI. The different flows are configured ON/OFF using RBS MOM parameter IubDataStreams:: schHsFlowControlOnOff.

Data Source

NodeB

Source Field

pmDelayDistributionSpi15

Source Section

HsDschResources

pmDelayDistrSpi15_05

Measurements to observe the distribution of the scheduling delay for scheduling priority class 00-15 on each subframe on those priority queue(s) selected for transmission. The scheduling

delay is counted as a percentage of schMaxdelay of each priority class and 3000 ms will be used as a schMaxDelay in case it is set to -1. Each counter observes a specific SPI. The different flows are configured ON/OFF using RBS MOM parameter IubDataStreams:: schHsFlowControlOnOff.

Data Source

NodeB

Source Field

pmDelayDistributionSpi15

Source Section

HsDschResources

pmDelayDistrSpi15_06

Measurements to observe the distribution of the scheduling delay for scheduling priority class 00-15 on each subframe on those priority queue(s) selected for transmission. The scheduling delay is counted as a percentage of schMaxdelay of each priority class and 3000 ms will be used as a schMaxDelay in case it is set to -1. Each counter observes a specific SPI. The different flows are configured ON/OFF using RBS MOM parameter IubDataStreams:: schHsFlowControlOnOff.

Data Source

NodeB

Source Field

pmDelayDistributionSpi15

Source Section

HsDschResources

pmDelayDistrSpi15_07

Measurements to observe the distribution of the scheduling delay for scheduling priority class 00-15 on each subframe on those priority queue(s) selected for transmission. The scheduling delay is counted as a percentage of schMaxdelay of each priority class and 3000 ms will be used as a schMaxDelay in case it is set to -1. Each counter observes a specific SPI. The different flows are configured ON/OFF using RBS MOM parameter IubDataStreams:: schHsFlowControlOnOff.

Data Source

NodeB

Source Field

pmDelayDistributionSpi15

Source Section

HsDschResources

pmDelayDistrSpi15_08

Measurements to observe the distribution of the scheduling delay for scheduling priority class 00-15 on each subframe on those priority queue(s) selected for transmission. The scheduling delay is counted as a percentage of schMaxdelay of each priority class and 3000 ms will be used as a schMaxDelay in case it is set to -1. Each counter observes a specific SPI. The different flows are configured ON/OFF using RBS MOM parameter IubDataStreams:: schHsFlowControlOnOff.

Data Source

NodeB

Source Field

pmDelayDistributionSpi15

Source Section

HsDschResources

pmDelayDistrSpi15_09

Measurements to observe the distribution of the scheduling delay for scheduling priority class 00-15 on each subframe on those priority queue(s) selected for transmission. The scheduling delay is counted as a percentage of schMaxdelay of each priority class and 3000 ms will be used as a schMaxDelay in case it is set to -1. Each counter observes a specific SPI. The different flows are configured ON/OFF using RBS MOM parameter IubDataStreams:: schHsFlowControlOnOff.

Data Source

NodeB

Source Field

pmDelayDistributionSpi15

Source Section

HsDschResources

pmDelayDistrSpi15_10

Measurements to observe the distribution of the scheduling delay for scheduling priority class 00-15 on each subframe on those priority queue(s) selected for transmission. The scheduling delay is counted as a percentage of schMaxdelay of each priority class and 3000 ms will be used as a schMaxDelay in case it is set to -1. Each counter observes a specific SPI. The different flows are configured ON/OFF using RBS MOM parameter IubDataStreams:: schHsFlowControlOnOff.

Data Source

NodeB

Source Field

pmDelayDistributionSpi15

Source Section

HsDschResources

pmDelayDistrSpi15_11

Measurements to observe the distribution of the scheduling delay for scheduling priority class 00-15 on each subframe on those priority queue(s) selected for transmission. The scheduling delay is counted as a percentage of schMaxdelay of each priority class and 3000 ms will be used as a schMaxDelay in case it is set to -1. Each counter observes a specific SPI. The different flows are configured ON/OFF using RBS MOM parameter IubDataStreams:: schHsFlowControlOnOff.

Data Source

NodeB

Source Field

pmDelayDistributionSpi15

Source Section

HsDschResources

pmIubMacdPduCellReceivedBits

The number of bits received over Iub high-speed MAC-d PDU in the cell

Data Source

NodeB

Source Field

pmIubMacdPduCellReceivedBits

Source Section

HsDschResources

pmNackReceived

The number of occasions when Negative Acknowledgement (NACK) is received

Data Source

NodeB

Source Field

pmNackReceived

Source Section

HsDschResources

pmNoActiveSubFrames

The sum of active 2 ms subframes

Data Source

NodeB

Source Field

pmNoActiveSubFrames

Source Section

HsDschResources

pmNoActSubFrmsSpi00

The number of subframes containing high-speed data transmitted by the RBS. The counter is per cell and per subframe, meaning increments with max 1 per subframe. A "subframe" is a 2 ms TTI for HS-DSCH. Each counter observes a specific SPI. The different flows are configured ON/OFF using RBS MOM parameter IubDataStreams::schHsFlowControlOnOff.

Data Source

NodeB

Source Field

pmNoActiveSubFramesSpi00

Source Section

HsDschResources

pmNoActSubFrmsSpi01

The number of subframes containing high-speed data transmitted by the RBS. The counter is per cell and per subframe, meaning increments with max 1 per subframe. A "subframe" is a 2 ms TTI for HS-DSCH. Each counter observes a specific SPI. The different flows are configured ON/OFF using RBS MOM parameter IubDataStreams::schHsFlowControlOnOff.

Data Source

NodeB

Source Field

pmNoActiveSubFramesSpi01

Source Section

HsDschResources

pmNoActSubFrmsSpi02

The number of subframes containing high-speed data transmitted by the RBS. The counter is per cell and per subframe, meaning increments with max 1 per subframe. A "subframe" is a 2 ms TTI for HS-DSCH. Each counter observes a specific SPI. The different flows are configured ON/OFF using RBS MOM parameter IubDataStreams::schHsFlowControlOnOff.

Data Source

NodeB

Source Field

pmNoActiveSubFramesSpi02

Source Section

HsDschResources

pmNoActSubFrmsSpi03

The number of subframes containing high-speed data transmitted by the RBS. The counter is per cell and per subframe, meaning increments with max 1 per subframe. A "subframe" is a 2

ms TTI for HS-DSCH. Each counter observes a specific SPI. The different flows are configured ON/OFF using RBS MOM parameter IubDataStreams::schHsFlowControlOnOff.

Data Source

NodeB

Source Field

pmNoActiveSubFramesSpi03

Source Section

HsDschResources

pmNoActSubFrmsSpi04

The number of subframes containing high-speed data transmitted by the RBS. The counter is per cell and per subframe, meaning increments with max 1 per subframe. A "subframe" is a 2 ms TTI for HS-DSCH. Each counter observes a specific SPI. The different flows are configured ON/OFF using RBS MOM parameter IubDataStreams::schHsFlowControlOnOff.

Data Source

NodeB

Source Field

pmNoActiveSubFramesSpi04

Source Section

HsDschResources

pmNoActSubFrmsSpi05

The number of subframes containing high-speed data transmitted by the RBS. The counter is per cell and per subframe, meaning increments with max 1 per subframe. A "subframe" is a 2 ms TTI for HS-DSCH. Each counter observes a specific SPI. The different flows are configured ON/OFF using RBS MOM parameter IubDataStreams::schHsFlowControlOnOff.

Data Source

NodeB

Source Field

pmNoActiveSubFramesSpi05

Source Section

HsDschResources

pmNoActSubFrmsSpi06

The number of subframes containing high-speed data transmitted by the RBS. The counter is per cell and per subframe, meaning increments with max 1 per subframe. A "subframe" is a 2 ms TTI for HS-DSCH. Each counter observes a specific SPI. The different flows are configured ON/OFF using RBS MOM parameter IubDataStreams::schHsFlowControlOnOff.

Data Source

NodeB

Source Field

pmNoActiveSubFramesSpi06

Source Section

HsDschResources

pmNoActSubFrmsSpi07

The number of subframes containing high-speed data transmitted by the RBS. The counter is per cell and per subframe, meaning increments with max 1 per subframe. A "subframe" is a 2 ms TTI for HS-DSCH. Each counter observes a specific SPI. The different flows are configured ON/OFF using RBS MOM parameter IubDataStreams::schHsFlowControlOnOff.

Data Source

NodeB

Source Field

pmNoActiveSubFramesSpi07

Source Section

HsDschResources

pmNoActSubFrmsSpi08

The number of subframes containing high-speed data transmitted by the RBS. The counter is per cell and per subframe, meaning increments with max 1 per subframe. A "subframe" is a 2 ms TTI for HS-DSCH. Each counter observes a specific SPI. The different flows are configured ON/OFF using RBS MOM parameter IubDataStreams::schHsFlowControlOnOff.

Data Source

NodeB

Source Field

pmNoActiveSubFramesSpi08

Source Section

HsDschResources

pmNoActSubFrmsSpi09

The number of subframes containing high-speed data transmitted by the RBS. The counter is per cell and per subframe, meaning increments with max 1 per subframe. A "subframe" is a 2 ms TTI for HS-DSCH. Each counter observes a specific SPI. The different flows are configured ON/OFF using RBS MOM parameter IubDataStreams::schHsFlowControlOnOff.

Data Source

NodeB

Source Field

pmNoActiveSubFramesSpi09

Source Section

HsDschResources

pmNoActSubFrmsSpi10

The number of subframes containing high-speed data transmitted by the RBS. The counter is per cell and per subframe, meaning increments with max 1 per subframe. A "subframe" is a 2 ms TTI for HS-DSCH. Each counter observes a specific SPI. The different flows are configured ON/OFF using RBS MOM parameter IubDataStreams::schHsFlowControlOnOff.

Data Source

NodeB

Source Field

pmNoActiveSubFramesSpi10

Source Section

HsDschResources

pmNoActSubFrmsSpi11

The number of subframes containing high-speed data transmitted by the RBS. The counter is per cell and per subframe, meaning increments with max 1 per subframe. A "subframe" is a 2 ms TTI for HS-DSCH. Each counter observes a specific SPI. The different flows are configured ON/OFF using RBS MOM parameter IubDataStreams::schHsFlowControlOnOff.

Data Source

NodeB

Source Field

pmNoActiveSubFramesSpi11

Source Section

HsDschResources

pmNoActSubFrmsSpi12

The number of subframes containing high-speed data transmitted by the RBS. The counter is per cell and per subframe, meaning increments with max 1 per subframe. A "subframe" is a 2 ms TTI for HS-DSCH. Each counter observes a specific SPI. The different flows are configured ON/OFF using RBS MOM parameter IubDataStreams::schHsFlowControlOnOff.

Data Source

NodeB

Source Field

pmNoActiveSubFramesSpi12

Source Section

HsDschResources

pmNoActSubFrmsSpi13

The number of subframes containing high-speed data transmitted by the RBS. The counter is per cell and per subframe, meaning increments with max 1 per subframe. A "subframe" is a 2 ms TTI for HS-DSCH. Each counter observes a specific SPI. The different flows are configured ON/OFF using RBS MOM parameter IubDataStreams::schHsFlowControlOnOff.

Data Source

NodeB

Source Field

pmNoActiveSubFramesSpi13

Source Section

HsDschResources

pmNoActSubFrmsSpi14

The number of subframes containing high-speed data transmitted by the RBS. The counter is per cell and per subframe, meaning increments with max 1 per subframe. A "subframe" is a 2 ms TTI for HS-DSCH. Each counter observes a specific SPI. The different flows are configured ON/OFF using RBS MOM parameter IubDataStreams::schHsFlowControlOnOff.

Data Source

NodeB

Source Field

pmNoActiveSubFramesSpi14

Source Section

HsDschResources

pmNoActSubFrmsSpi15

The number of subframes containing high-speed data transmitted by the RBS. The counter is per cell and per subframe, meaning increments with max 1 per subframe. A "subframe" is a 2 ms TTI for HS-DSCH. Each counter observes a specific SPI. The different flows are configured ON/OFF using RBS MOM parameter IubDataStreams::schHsFlowControlOnOff.

Data Source

NodeB

Source Field

pmNoActiveSubFramesSpi15

Source Section

HsDschResources

pmNoInactiveRequiredSubFrames

The sum of 2 ms subframes

Data Source

NodeB

Source Field

pmNoInactiveRequiredSubFrames

Source Section

HsDschResources

pmNoInactReqSubFrmsSpi00

The number of empty subframes transmitted even though data is scheduled for priority queue. Each counter observes a specific SPI. The different flows are configured ON/OFF using RBS MOM parameter IubDataStreams::schHsFlowControlOnOff.

Data Source

NodeB

Source Field

pmNoInactiveRequiredSubFramesSpi00

Source Section

HsDschResources

pmNoInactReqSubFrmsSpi01

The number of empty subframes transmitted even though data is scheduled for priority queue. Each counter observes a specific SPI. The different flows are configured ON/OFF using RBS MOM parameter IubDataStreams::schHsFlowControlOnOff.

Data Source

NodeB

Source Field

pmNoInactiveRequiredSubFramesSpi01

Source Section

HsDschResources

pmNoInactReqSubFrmsSpi02

The number of empty subframes transmitted even though data is scheduled for priority queue. Each counter observes a specific SPI. The different flows are configured ON/OFF using RBS MOM parameter IubDataStreams::schHsFlowControlOnOff.

Data Source

NodeB

Source Field

pmNoInactiveRequiredSubFramesSpi02

Source Section

HsDschResources

pmNoInactReqSubFrmsSpi03

The number of empty subframes transmitted even though data is scheduled for priority queue. Each counter observes a specific SPI. The different flows are configured ON/OFF using RBS MOM parameter IubDataStreams::schHsFlowControlOnOff.

Data Source

NodeB

Source Field

pmNoInactiveRequiredSubFramesSpi03

Source Section

HsDschResources

pmNoInactReqSubFrmsSpi04

The number of empty subframes transmitted even though data is scheduled for priority queue. Each counter observes a specific SPI. The different flows are configured ON/OFF using RBS MOM parameter IubDataStreams::schHsFlowControlOnOff.

Data Source

NodeB

Source Field

pmNoInactiveRequiredSubFramesSpi04

Source Section

HsDschResources

pmNoInactReqSubFrmsSpi05

The number of empty subframes transmitted even though data is scheduled for priority queue. Each counter observes a specific SPI. The different flows are configured ON/OFF using RBS MOM parameter IubDataStreams::schHsFlowControlOnOff.

Data Source

NodeB

Source Field

pmNoInactiveRequiredSubFramesSpi05

Source Section

HsDschResources

pmNoInactReqSubFrmsSpi06

The number of empty subframes transmitted even though data is scheduled for priority queue. Each counter observes a specific SPI. The different flows are configured ON/OFF using RBS MOM parameter IubDataStreams::schHsFlowControlOnOff.

Data Source

NodeB

Source Field

pmNoInactiveRequiredSubFramesSpi06

Source Section

HsDschResources

pmNoInactReqSubFrmsSpi07

The number of empty subframes transmitted even though data is scheduled for priority queue. Each counter observes a specific SPI. The different flows are configured ON/OFF using RBS MOM parameter IubDataStreams::schHsFlowControlOnOff.

Data Source

NodeB

Source Field

pmNoInactiveRequiredSubFramesSpi07

Source Section

HsDschResources

pmNoInactReqSubFrmsSpi08

The number of empty subframes transmitted even though data is scheduled for priority queue. Each counter observes a specific SPI. The different flows are configured ON/OFF using RBS MOM parameter IubDataStreams::schHsFlowControlOnOff.

Data Source

NodeB

Source Field

pmNoInactiveRequiredSubFramesSpi08

Source Section

HsDschResources

pmNoInactReqSubFrmsSpi09

The number of empty subframes transmitted even though data is scheduled for priority queue. Each counter observes a specific SPI. The different flows are configured ON/OFF using RBS MOM parameter IubDataStreams::schHsFlowControlOnOff.

Data Source

NodeB

Source Field

pmNoInactiveRequiredSubFramesSpi09

Source Section

HsDschResources

pmNoInactReqSubFrmsSpi10

The number of empty subframes transmitted even though data is scheduled for priority queue. Each counter observes a specific SPI. The different flows are configured ON/OFF using RBS MOM parameter IubDataStreams::schHsFlowControlOnOff.

Data Source

NodeB

Source Field

pmNoInactiveRequiredSubFramesSpi10

Source Section

HsDschResources

pmNoInactReqSubFrmsSpi11

The number of empty subframes transmitted even though data is scheduled for priority queue. Each counter observes a specific SPI. The different flows are configured ON/OFF using RBS MOM parameter IubDataStreams::schHsFlowControlOnOff.

Data Source

NodeB

Source Field

pmNoInactiveRequiredSubFramesSpi11

Source Section

HsDschResources

pmNoInactReqSubFrmsSpi12

The number of empty subframes transmitted even though data is scheduled for priority queue. Each counter observes a specific SPI. The different flows are configured ON/OFF using RBS MOM parameter IubDataStreams::schHsFlowControlOnOff.

Data Source

NodeB

Source Field

pmNoInactiveRequiredSubFramesSpi12

Source Section

HsDschResources

pmNoInactReqSubFrmsSpi13

The number of empty subframes transmitted even though data is scheduled for priority queue. Each counter observes a specific SPI. The different flows are configured ON/OFF using RBS MOM parameter IubDataStreams::schHsFlowControlOnOff.

Data Source

NodeB

Source Field

pmNoInactiveRequiredSubFramesSpi13

Source Section

HsDschResources

pmNoInactReqSubFrmsSpi14

The number of empty subframes transmitted even though data is scheduled for priority queue. Each counter observes a specific SPI. The different flows are configured ON/OFF using RBS MOM parameter IubDataStreams::schHsFlowControlOnOff.

Data Source

NodeB

Source Field

pmNoInactiveRequiredSubFramesSpi14

Source Section

HsDschResources

pmNoInactReqSubFrmsSpi15

The number of empty subframes transmitted even though data is scheduled for priority queue. Each counter observes a specific SPI. The different flows are configured ON/OFF using RBS MOM parameter IubDataStreams::schHsFlowControlOnOff.

Data Source

NodeB

Source Field

pmNoInactiveRequiredSubFramesSpi15

Source Section

HsDschResources

pmNoOfHsUsersPerTti_00

Average number of users scheduled in the cell at each 2 ms subframe. Number of samples equal to 0

Data Source

NodeB

Source Field

pmNoOfHsUsersPerTti

Source Section

HsDschResources

pmNoOfHsUsersPerTti_01

Average number of users scheduled in the cell at each 2 ms subframe. Number of samples equal to 1

Data Source

NodeB

Source Field

pmNoOfHsUsersPerTti

Source Section

HsDschResources

pmNoOfHsUsersPerTti_02

Average number of users scheduled in the cell at each 2 ms subframe. Number of samples equal to 2

Data Source

NodeB

Source Field

pmNoOfHsUsersPerTti

Source Section

HsDschResources

pmNoOfHsUsersPerTti_03

Average number of users scheduled in the cell at each 2 ms subframe. Number of samples equal to 3

Data Source

NodeB

Source Field

pmNoOfHsUsersPerTti

Source Section

HsDschResources

pmNoOfHsUsersPerTti_04

Average number of users scheduled in the cell at each 2 ms subframe. Number of samples equal to 4

Data Source

NodeB

Source Field

pmNoOfHsUsersPerTti

Source Section

HsDschResources

pmRemainingResourceCheck_00

Counter that records the reason why it is not possible to schedule another high-speed user for immediate traffic. Number of samples equal to [0] HS-SCCH code shortage

Data Source

NodeB

Source Field

pmRemainingResourceCheck

Source Section

HsDschResources

pmRemainingResourceCheck_01

Counter that records the reason why it is not possible to schedule another high-speed user for immediate traffic. Number of samples equal to [1] HS-PDSCH code shortage

Data Source

NodeB

Source Field

pmRemainingResourceCheck

Source Section

HsDschResources

pmRemainingResourceCheck_02

Counter that records the reason why it is not possible to schedule another high-speed user for immediate traffic. Number of samples equal to [2] HS-PDSCH power shortage

Data Source

NodeB

Source Field

pmRemainingResourceCheck

Source Section

HsDschResources

pmReportedCqi_0

The reported Channel Quality Indicator CQI in the range 0 to 1. This counter is only relevant for Use not using MIMO or 64QAM. The value is true (unadjusted) CQI that is counted.

Data Source

NodeB

Source Field

pmReportedCqi

Source Section

HsDschResources

pmReportedCqi_1

The reported Channel Quality Indicator CQI in the range 1 to 2. This counter is only relevant for Use not using MIMO or 64QAM. The value is true (unadjusted) CQI that is counted.

Data Source

NodeB

Source Field

pmReportedCqi

Source Section

HsDschResources

pmReportedCqi_10

The reported Channel Quality Indicator CQI in the range 10 to 11. This counter is only relevant for Use not using MIMO or 64QAM. The value is true (unadjusted) CQI that is counted.

Data Source

NodeB

Source Field

pmReportedCqi

Source Section

HsDschResources

pmReportedCqi_11

The reported Channel Quality Indicator CQI in the range 11 to 12. This counter is only relevant for Use not using MIMO or 64QAM. The value is true (unadjusted) CQI that is counted.

Data Source

NodeB

Source Field

pmReportedCqi

Source Section

HsDschResources

pmReportedCqi_12

The reported Channel Quality Indicator CQI in the range 12 to 13. This counter is only relevant for Use not using MIMO or 64QAM. The value is true (unadjusted) CQI that is counted.

Data Source

NodeB

Source Field

pmReportedCqi

Source Section

HsDschResources

pmReportedCqi_13

The reported Channel Quality Indicator CQI in the range 13 to 14. This counter is only relevant for Use not using MIMO or 64QAM. The value is true (unadjusted) CQI that is counted.

Data Source

NodeB

Source Field

pmReportedCqi

Source Section

HsDschResources

pmReportedCqi_14

The reported Channel Quality Indicator CQI in the range 14 to 15. This counter is only relevant for Use not using MIMO or 64QAM. The value is true (unadjusted) CQI that is counted.

Data Source

NodeB

Source Field

pmReportedCqi

Source Section

HsDschResources

pmReportedCqi_15

The reported Channel Quality Indicator CQI in the range 15 to 16. This counter is only relevant for Use not using MIMO or 64QAM. The value is true (unadjusted) CQI that is counted.

Data Source

NodeB

Source Field

pmReportedCqi

Source Section

HsDschResources

pmReportedCqi_16

The reported Channel Quality Indicator CQI in the range 16 to 17. This counter is only relevant for Use not using MIMO or 64QAM. The value is true (unadjusted) CQI that is counted.

Data Source

NodeB

Source Field

pmReportedCqi

Source Section

HsDschResources

pmReportedCqi_17

The reported Channel Quality Indicator CQI in the range 17 to 18. This counter is only relevant for Use not using MIMO or 64QAM. The value is true (unadjusted) CQI that is counted.

Data Source

NodeB

Source Field

pmReportedCqi

Source Section

HsDschResources

pmReportedCqi_18

The reported Channel Quality Indicator CQI in the range 18 to 19. This counter is only relevant for Use not using MIMO or 64QAM. The value is true (unadjusted) CQI that is counted.

Data Source

NodeB

Source Field

pmReportedCqi

Source Section

HsDschResources

pmReportedCqi_19

The reported Channel Quality Indicator CQI in the range 19 to 20. This counter is only relevant for Use not using MIMO or 64QAM. The value is true (unadjusted) CQI that is counted.

Data Source

NodeB

Source Field

pmReportedCqi

Source Section

HsDschResources

pmReportedCqi_2

The reported Channel Quality Indicator CQI in the range 2 to 3. This counter is only relevant for Use not using MIMO or 64QAM. The value is true (unadjusted) CQI that is counted.

Data Source

NodeB

Source Field

pmReportedCqi

Source Section

HsDschResources

pmReportedCqi_20

The reported Channel Quality Indicator CQI in the range 20 to 21. This counter is only relevant for Use not using MIMO or 64QAM. The value is true (unadjusted) CQI that is counted.

Data Source

NodeB

Source Field

pmReportedCqi

Source Section

HsDschResources

pmReportedCqi_21

The reported Channel Quality Indicator CQI in the range 21 to 22. This counter is only relevant for Use not using MIMO or 64QAM. The value is true (unadjusted) CQI that is counted.

Data Source

NodeB

Source Field

pmReportedCqi

Source Section

HsDschResources

pmReportedCqi_22

The reported Channel Quality Indicator CQI in the range 22 to 23. This counter is only relevant for Use not using MIMO or 64QAM. The value is true (unadjusted) CQI that is counted.

Data Source

NodeB

Source Field

pmReportedCqi

Source Section

HsDschResources

pmReportedCqi_23

The reported Channel Quality Indicator CQI in the range 23 to 24. This counter is only relevant for Use not using MIMO or 64QAM. The value is true (unadjusted) CQI that is counted.

Data Source

NodeB

Source Field

pmReportedCqi

Source Section

HsDschResources

pmReportedCqi_24

The reported Channel Quality Indicator CQI in the range 24 to 25. This counter is only relevant for Use not using MIMO or 64QAM. The value is true (unadjusted) CQI that is counted.

Data Source

NodeB

Source Field

pmReportedCqi

Source Section

HsDschResources

pmReportedCqi_25

The reported Channel Quality Indicator CQI in the range 25 to 26. This counter is only relevant for Use not using MIMO or 64QAM. The value is true (unadjusted) CQI that is counted.

Data Source

NodeB

Source Field

pmReportedCqi

Source Section

HsDschResources

pmReportedCqi_26

The reported Channel Quality Indicator CQI in the range 26 to 27. This counter is only relevant for Use not using MIMO or 64QAM. The value is true (unadjusted) CQI that is counted.

Data Source

NodeB

Source Field

pmReportedCqi

Source Section

HsDschResources

pmReportedCqi_27

The reported Channel Quality Indicator CQI in the range 27 to 28. This counter is only relevant for Use not using MIMO or 64QAM. The value is true (unadjusted) CQI that is counted.

Data Source

NodeB

Source Field

pmReportedCqi

Source Section

HsDschResources

pmReportedCqi_28

The reported Channel Quality Indicator CQI in the range 28 to 29. This counter is only relevant for Use not using MIMO or 64QAM. The value is true (unadjusted) CQI that is counted.

Data Source

NodeB

Source Field

pmReportedCqi

Source Section

HsDschResources

pmReportedCqi_29

The reported Channel Quality Indicator CQI in the range 29 to 30. This counter is only relevant for Use not using MIMO or 64QAM. The value is true (unadjusted) CQI that is counted.

Data Source

NodeB

Source Field

pmReportedCqi

Source Section

HsDschResources

pmReportedCqi_3

The reported Channel Quality Indicator CQI in the range 3 to 4. This counter is only relevant for Use not using MIMO or 64QAM. The value is true (unadjusted) CQI that is counted.

Data Source

NodeB

Source Field

pmReportedCqi

Source Section

HsDschResources

pmReportedCqi_30

The reported Channel Quality Indicator CQI in the range 30 to 31. This counter is only relevant for Use not using MIMO or 64QAM. The value is true (unadjusted) CQI that is counted.

Data Source

NodeB

Source Field

pmReportedCqi

Source Section

HsDschResources

pmReportedCqi_31

The reported Channel Quality Indicator CQI with invalid CQI values. This counter is only relevant for Use not using MIMO or 64QAM. The value is true (unadjusted) CQI that is counted.

Data Source

NodeB

Source Field

pmReportedCqi

Source Section

HsDschResources

pmReportedCqi_4

The reported Channel Quality Indicator CQI in the range 4 to 5. This counter is only relevant for Use not using MIMO or 64QAM. The value is true (unadjusted) CQI that is counted.

Data Source

NodeB

Source Field

pmReportedCqi

Source Section

HsDschResources

pmReportedCqi_5

The reported Channel Quality Indicator CQI in the range 5 to 6. This counter is only relevant for Use not using MIMO or 64QAM. The value is true (unadjusted) CQI that is counted.

Data Source

NodeB

Source Field

pmReportedCqi

Source Section

HsDschResources

pmReportedCqi_6

The reported Channel Quality Indicator CQI in the range 6 to 7. This counter is only relevant for Use not using MIMO or 64QAM. The value is true (unadjusted) CQI that is counted.

Data Source

NodeB

Source Field

pmReportedCqi

Source Section

HsDschResources

pmReportedCqi_7

The reported Channel Quality Indicator CQI in the range 7 to 8. This counter is only relevant for Use not using MIMO or 64QAM. The value is true (unadjusted) CQI that is counted.

Data Source

NodeB

Source Field

pmReportedCqi

Source Section

HsDschResources

pmReportedCqi_8

The reported Channel Quality Indicator CQI in the range 8 to 9. This counter is only relevant for Use not using MIMO or 64QAM. The value is true (unadjusted) CQI that is counted.

Data Source

NodeB

Source Field

pmReportedCqi

Source Section

HsDschResources

pmReportedCqi_9

The reported Channel Quality Indicator CQI in the range 9 to 10. This counter is only relevant for Use not using MIMO or 64QAM. The value is true (unadjusted) CQI that is counted.

Data Source

NodeB

Source Field

pmReportedCqi

Source Section

HsDschResources

pmReportedCqi64Qam_00

The UE reported CQI received for a 64QAM-enabled HS-DSCH. Note that it is the true (unadjusted) CQI that is counted for 64QAM-enabled HS-DSCHs. Range: Channel Quality with Value 0

Data Source

NodeB

Source Field

pmReportedCqi64Qam

Source Section

HsDschResources

pmReportedCqi64Qam_01

The UE reported CQI received for a 64QAM-enabled HS-DSCH. Note that it is the true (unadjusted) CQI that is counted for 64QAM-enabled HS-DSCHs. Range: Channel Quality with Value 1

Data Source

NodeB

Source Field

pmReportedCqi64Qam

Source Section

HsDschResources

pmReportedCqi64Qam_02

The UE reported CQI received for a 64QAM-enabled HS-DSCH. Note that it is the true (unadjusted) CQI that is counted for 64QAM-enabled HS-DSCHs. Range: Channel Quality with Value 2

Data Source

NodeB

Source Field

pmReportedCqi64Qam

Source Section

HsDschResources

pmReportedCqi64Qam_03

The UE reported CQI received for a 64QAM-enabled HS-DSCH. Note that it is the true (unadjusted) CQI that is counted for 64QAM-enabled HS-DSCHs. Range: Channel Quality with Value 3

Data Source

NodeB

Source Field

pmReportedCqi64Qam

Source Section

HsDschResources

pmReportedCqi64Qam_04

The UE reported CQI received for a 64QAM-enabled HS-DSCH. Note that it is the true (unadjusted) CQI that is counted for 64QAM-enabled HS-DSCHs. Range: Channel Quality with Value 4

Data Source

NodeB

Source Field

pmReportedCqi64Qam

Source Section

HsDschResources

pmReportedCqi64Qam_05

The UE reported CQI received for a 64QAM-enabled HS-DSCH. Note that it is the true (unadjusted) CQI that is counted for 64QAM-enabled HS-DSCHs. Range: Channel Quality with Value 5

Data Source

NodeB

Source Field

pmReportedCqi64Qam

Source Section

HsDschResources

pmReportedCqi64Qam_06

The UE reported CQI received for a 64QAM-enabled HS-DSCH. Note that it is the true (unadjusted) CQI that is counted for 64QAM-enabled HS-DSCHs. Range: Channel Quality with Value 6

Data Source

NodeB

Source Field

pmReportedCqi64Qam

Source Section

HsDschResources

pmReportedCqi64Qam_07

The UE reported CQI received for a 64QAM-enabled HS-DSCH. Note that it is the true (unadjusted) CQI that is counted for 64QAM-enabled HS-DSCHs. Range: Channel Quality with Value 7

Data Source

NodeB

Source Field

pmReportedCqi64Qam

Source Section

HsDschResources

pmReportedCqi64Qam_08

The UE reported CQI received for a 64QAM-enabled HS-DSCH. Note that it is the true (unadjusted) CQI that is counted for 64QAM-enabled HS-DSCHs. Range: Channel Quality with Value 8

Data Source

NodeB

Source Field

pmReportedCqi64Qam

Source Section

HsDschResources

pmReportedCqi64Qam_09

The UE reported CQI received for a 64QAM-enabled HS-DSCH. Note that it is the true (unadjusted) CQI that is counted for 64QAM-enabled HS-DSCHs. Range: Channel Quality with Value 9

Data Source

NodeB

Source Field

pmReportedCqi64Qam

Source Section

HsDschResources

pmReportedCqi64Qam_10

The UE reported CQI received for a 64QAM-enabled HS-DSCH. Note that it is the true (unadjusted) CQI that is counted for 64QAM-enabled HS-DSCHs. Range: Channel Quality with Value 10

Data Source

NodeB

Source Field

pmReportedCqi64Qam

Source Section

HsDschResources

pmReportedCqi64Qam_11

The UE reported CQI received for a 64QAM-enabled HS-DSCH. Note that it is the true (unadjusted) CQI that is counted for 64QAM-enabled HS-DSCHs. Range: Channel Quality with Value 11

Data Source

NodeB

Source Field

pmReportedCqi64Qam

Source Section

HsDschResources

pmReportedCqi64Qam_12

The UE reported CQI received for a 64QAM-enabled HS-DSCH. Note that it is the true (unadjusted) CQI that is counted for 64QAM-enabled HS-DSCHs. Range: Channel Quality with Value 12

Data Source

NodeB

Source Field

pmReportedCqi64Qam

Source Section

HsDschResources

pmReportedCqi64Qam_13

The UE reported CQI received for a 64QAM-enabled HS-DSCH. Note that it is the true (unadjusted) CQI that is counted for 64QAM-enabled HS-DSCHs. Range: Channel Quality with Value 13

Data Source

NodeB

Source Field

pmReportedCqi64Qam

Source Section

HsDschResources

pmReportedCqi64Qam_14

The UE reported CQI received for a 64QAM-enabled HS-DSCH. Note that it is the true (unadjusted) CQI that is counted for 64QAM-enabled HS-DSCHs. Range: Channel Quality with Value 14

Data Source

NodeB

Source Field

pmReportedCqi64Qam

Source Section

HsDschResources

pmReportedCqi64Qam_15

The UE reported CQI received for a 64QAM-enabled HS-DSCH. Note that it is the true (unadjusted) CQI that is counted for 64QAM-enabled HS-DSCHs. Range: Channel Quality with Value 15

Data Source

NodeB

Source Field

pmReportedCqi64Qam

Source Section

HsDschResources

pmReportedCqi64Qam_16

The UE reported CQI received for a 64QAM-enabled HS-DSCH. Note that it is the true (unadjusted) CQI that is counted for 64QAM-enabled HS-DSCHs. Range: Channel Quality with Value 16

Data Source

NodeB

Source Field

pmReportedCqi64Qam

Source Section

HsDschResources

pmReportedCqi64Qam_17

The UE reported CQI received for a 64QAM-enabled HS-DSCH. Note that it is the true (unadjusted) CQI that is counted for 64QAM-enabled HS-DSCHs. Range: Channel Quality with Value 17

Data Source

NodeB

Source Field

pmReportedCqi64Qam

Source Section

HsDschResources

pmReportedCqi64Qam_18

The UE reported CQI received for a 64QAM-enabled HS-DSCH. Note that it is the true (unadjusted) CQI that is counted for 64QAM-enabled HS-DSCHs. Range: Channel Quality with Value 18

Data Source

NodeB

Source Field

pmReportedCqi64Qam

Source Section

HsDschResources

pmReportedCqi64Qam_19

The UE reported CQI received for a 64QAM-enabled HS-DSCH. Note that it is the true (unadjusted) CQI that is counted for 64QAM-enabled HS-DSCHs. Range: Channel Quality with Value 19

Data Source

NodeB

Source Field

pmReportedCqi64Qam

Source Section

HsDschResources

pmReportedCqi64Qam_20

The UE reported CQI received for a 64QAM-enabled HS-DSCH. Note that it is the true (unadjusted) CQI that is counted for 64QAM-enabled HS-DSCHs. Range: Channel Quality with Value 20

Data Source

NodeB

Source Field

pmReportedCqi64Qam

Source Section

HsDschResources

pmReportedCqi64Qam_21

The UE reported CQI received for a 64QAM-enabled HS-DSCH. Note that it is the true (unadjusted) CQI that is counted for 64QAM-enabled HS-DSCHs. Range: Channel Quality with Value 21

Data Source

NodeB

Source Field

pmReportedCqi64Qam

Source Section

HsDschResources

pmReportedCqi64Qam_22

The UE reported CQI received for a 64QAM-enabled HS-DSCH. Note that it is the true (unadjusted) CQI that is counted for 64QAM-enabled HS-DSCHs. Range: Channel Quality with Value 22

Data Source

NodeB

Source Field

pmReportedCqi64Qam

Source Section

HsDschResources

pmReportedCqi64Qam_23

The UE reported CQI received for a 64QAM-enabled HS-DSCH. Note that it is the true (unadjusted) CQI that is counted for 64QAM-enabled HS-DSCHs. Range: Channel Quality with Value 23

Data Source

NodeB

Source Field

pmReportedCqi64Qam

Source Section

HsDschResources

pmReportedCqi64Qam_24

The UE reported CQI received for a 64QAM-enabled HS-DSCH. Note that it is the true (unadjusted) CQI that is counted for 64QAM-enabled HS-DSCHs. Range: Channel Quality with Value 24

Data Source

NodeB

Source Field

pmReportedCqi64Qam

Source Section

HsDschResources

pmReportedCqi64Qam_25

The UE reported CQI received for a 64QAM-enabled HS-DSCH. Note that it is the true (unadjusted) CQI that is counted for 64QAM-enabled HS-DSCHs. Range: Channel Quality with Value 25

Data Source

NodeB

Source Field

pmReportedCqi64Qam

Source Section

HsDschResources

pmReportedCqi64Qam_26

The UE reported CQI received for a 64QAM-enabled HS-DSCH. Note that it is the true (unadjusted) CQI that is counted for 64QAM-enabled HS-DSCHs. Range: Channel Quality with Value 26

Data Source

NodeB

Source Field

pmReportedCqi64Qam

Source Section

HsDschResources

pmReportedCqi64Qam_27

The UE reported CQI received for a 64QAM-enabled HS-DSCH. Note that it is the true (unadjusted) CQI that is counted for 64QAM-enabled HS-DSCHs. Range: Channel Quality with Value 27

Data Source

NodeB

Source Field

pmReportedCqi64Qam

Source Section

HsDschResources

pmReportedCqi64Qam_28

The UE reported CQI received for a 64QAM-enabled HS-DSCH. Note that it is the true (unadjusted) CQI that is counted for 64QAM-enabled HS-DSCHs. Range: Channel Quality with Value 28

Data Source

NodeB

Source Field

pmReportedCqi64Qam

Source Section

HsDschResources

pmReportedCqi64Qam_29

The UE reported CQI received for a 64QAM-enabled HS-DSCH. Note that it is the true (unadjusted) CQI that is counted for 64QAM-enabled HS-DSCHs. Range: Channel Quality with Value 29

Data Source

NodeB

Source Field

pmReportedCqi64Qam

Source Section

HsDschResources

pmReportedCqi64Qam_30

The UE reported CQI received for a 64QAM-enabled HS-DSCH. Note that it is the true (unadjusted) CQI that is counted for 64QAM-enabled HS-DSCHs. Range: Channel Quality with Value 30

Data Source

NodeB

Source Field

pmReportedCqi64Qam

Source Section

HsDschResources

pmReportedCqiMimoDs1_00

The UE reported dual stream CQI for stream 1. Note that it is the true (e.g. unadjusted) CQI that is counted. This counter is only relevant for UEs using MIMO. Range: Channel Quality with Value 0

Data Source

NodeB

Source Field

pmReportedCqiMimoDs1

Source Section

HsDschResources

pmReportedCqiMimoDs1_01

The UE reported dual stream CQI for stream 1. Note that it is the true (e.g. unadjusted) CQI that is counted. This counter is only relevant for UEs using MIMO. Range: Channel Quality with Value 1

Data Source

NodeB

Source Field

pmReportedCqiMimoDs1

Source Section

HsDschResources

pmReportedCqiMimoDs1_02

The UE reported dual stream CQI for stream 1. Note that it is the true (e.g. unadjusted) CQI that is counted. This counter is only relevant for UEs using MIMO. Range: Channel Quality with Value 2

Data Source

NodeB

Source Field

pmReportedCqiMimoDs1

Source Section

HsDschResources

pmReportedCqiMimoDs1_03

The UE reported dual stream CQI for stream 1. Note that it is the true (e.g. unadjusted) CQI that is counted. This counter is only relevant for UEs using MIMO. Range: Channel Quality with Value 3

Data Source

NodeB

Source Field

pmReportedCqiMimoDs1

Source Section

HsDschResources

pmReportedCqiMimoDs1_04

The UE reported dual stream CQI for stream 1. Note that it is the true (e.g. unadjusted) CQI that is counted. This counter is only relevant for UEs using MIMO. Range: Channel Quality with Value 4

Data Source

NodeB

Source Field

pmReportedCqiMimoDs1

Source Section

HsDschResources

pmReportedCqiMimoDs1_05

The UE reported dual stream CQI for stream 1. Note that it is the true (e.g. unadjusted) CQI that is counted. This counter is only relevant for UEs using MIMO. Range: Channel Quality with Value 5

Data Source

NodeB

Source Field

pmReportedCqiMimoDs1

Source Section

HsDschResources

pmReportedCqiMimoDs1_06

The UE reported dual stream CQI for stream 1. Note that it is the true (e.g. unadjusted) CQI that is counted. This counter is only relevant for UEs using MIMO. Range: Channel Quality with Value 6

Data Source

NodeB

Source Field

pmReportedCqiMimoDs1

Source Section

HsDschResources

pmReportedCqiMimoDs1_07

The UE reported dual stream CQI for stream 1. Note that it is the true (e.g. unadjusted) CQI that is counted. This counter is only relevant for UEs using MIMO. Range: Channel Quality with Value 7

Data Source

NodeB

Source Field

pmReportedCqiMimoDs1

Source Section

HsDschResources

pmReportedCqiMimoDs1_08

The UE reported dual stream CQI for stream 1. Note that it is the true (e.g. unadjusted) CQI that is counted. This counter is only relevant for UEs using MIMO. Range: Channel Quality with Value 8

Data Source

NodeB

Source Field

pmReportedCqiMimoDs1

Source Section

HsDschResources

pmReportedCqiMimoDs1_09

The UE reported dual stream CQI for stream 1. Note that it is the true (e.g. unadjusted) CQI that is counted. This counter is only relevant for UEs using MIMO. Range: Channel Quality with Value 9

Data Source

NodeB

Source Field

pmReportedCqiMimoDs1

Source Section

HsDschResources

pmReportedCqiMimoDs1_10

The UE reported dual stream CQI for stream 1. Note that it is the true (e.g. unadjusted) CQI that is counted. This counter is only relevant for UEs using MIMO. Range: Channel Quality with Value 10

Data Source

NodeB

Source Field

pmReportedCqiMimoDs1

Source Section

HsDschResources

pmReportedCqiMimoDs1_11

The UE reported dual stream CQI for stream 1. Note that it is the true (e.g. unadjusted) CQI that is counted. This counter is only relevant for UEs using MIMO. Range: Channel Quality with Value 11

Data Source

NodeB

Source Field

pmReportedCqiMimoDs1

Source Section

HsDschResources

pmReportedCqiMimoDs1_12

The UE reported dual stream CQI for stream 1. Note that it is the true (e.g. unadjusted) CQI that is counted. This counter is only relevant for UEs using MIMO. Range: Channel Quality with Value 12

Data Source

NodeB

Source Field

pmReportedCqiMimoDs1

Source Section

HsDschResources

pmReportedCqiMimoDs1_13

The UE reported dual stream CQI for stream 1. Note that it is the true (e.g. unadjusted) CQI that is counted. This counter is only relevant for UEs using MIMO. Range: Channel Quality with Value 13

Data Source

NodeB

Source Field

pmReportedCqiMimoDs1

Source Section

HsDschResources

pmReportedCqiMimoDs1_14

The UE reported dual stream CQI for stream 1. Note that it is the true (e.g. unadjusted) CQI that is counted. This counter is only relevant for UEs using MIMO. Range: Channel Quality with Value 14

Data Source

NodeB

Source Field

pmReportedCqiMimoDs1

Source Section

HsDschResources

pmReportedCqiMimoDs2_00

The UE reported dual stream CQI for stream 2. Note that it is the true (e.g. unadjusted) CQI that is counted. This counter is only relevant for UEs using MIMO. Range: Channel Quality with Value 0

Data Source

NodeB

Source Field

pmReportedCqiMimoDs2

Source Section

HsDschResources

pmReportedCqiMimoDs2_01

The UE reported dual stream CQI for stream 2. Note that it is the true (e.g. unadjusted) CQI that is counted. This counter is only relevant for UEs using MIMO. Range: Channel Quality with Value 1

Data Source

NodeB

Source Field

pmReportedCqiMimoDs2

Source Section

HsDschResources

pmReportedCqiMimoDs2_02

The UE reported dual stream CQI for stream 2. Note that it is the true (e.g. unadjusted) CQI that is counted. This counter is only relevant for UEs using MIMO. Range: Channel Quality with Value 2

Data Source

NodeB

Source Field

pmReportedCqiMimoDs2

Source Section

HsDschResources

pmReportedCqiMimoDs2_03

The UE reported dual stream CQI for stream 2. Note that it is the true (e.g. unadjusted) CQI that is counted. This counter is only relevant for UEs using MIMO. Range: Channel Quality with Value 3

Data Source

NodeB

Source Field

pmReportedCqiMimoDs2

Source Section

HsDschResources

pmReportedCqiMimoDs2_04

The UE reported dual stream CQI for stream 2. Note that it is the true (e.g. unadjusted) CQI that is counted. This counter is only relevant for UEs using MIMO. Range: Channel Quality with Value 4

Data Source

NodeB

Source Field

pmReportedCqiMimoDs2

Source Section

HsDschResources

pmReportedCqiMimoDs2_05

The UE reported dual stream CQI for stream 2. Note that it is the true (e.g. unadjusted) CQI that is counted. This counter is only relevant for UEs using MIMO. Range: Channel Quality with Value 5

Data Source

NodeB

Source Field

pmReportedCqiMimoDs2

Source Section

HsDschResources

pmReportedCqiMimoDs2_06

The UE reported dual stream CQI for stream 2. Note that it is the true (e.g. unadjusted) CQI that is counted. This counter is only relevant for UEs using MIMO. Range: Channel Quality with Value 6

Data Source

NodeB

Source Field

pmReportedCqiMimoDs2

Source Section

HsDschResources

pmReportedCqiMimoDs2_07

The UE reported dual stream CQI for stream 2. Note that it is the true (e.g. unadjusted) CQI that is counted. This counter is only relevant for UEs using MIMO. Range: Channel Quality with Value 7

Data Source

NodeB

Source Field

pmReportedCqiMimoDs2

Source Section

HsDschResources

pmReportedCqiMimoDs2_08

The UE reported dual stream CQI for stream 2. Note that it is the true (e.g. unadjusted) CQI that is counted. This counter is only relevant for UEs using MIMO. Range: Channel Quality with Value 8

Data Source

NodeB

Source Field

pmReportedCqiMimoDs2

Source Section

HsDschResources

pmReportedCqiMimoDs2_09

The UE reported dual stream CQI for stream 2. Note that it is the true (e.g. unadjusted) CQI that is counted. This counter is only relevant for UEs using MIMO. Range: Channel Quality with Value 9

Data Source

NodeB

Source Field

pmReportedCqiMimoDs2

Source Section

HsDschResources

pmReportedCqiMimoDs2_10

The UE reported dual stream CQI for stream 2. Note that it is the true (e.g. unadjusted) CQI that is counted. This counter is only relevant for UEs using MIMO. Range: Channel Quality with Value 10

Data Source

NodeB

Source Field

pmReportedCqiMimoDs2

Source Section

HsDschResources

pmReportedCqiMimoDs2_11

The UE reported dual stream CQI for stream 2. Note that it is the true (e.g. unadjusted) CQI that is counted. This counter is only relevant for UEs using MIMO. Range: Channel Quality with Value 11

Data Source

NodeB

Source Field

pmReportedCqiMimoDs2

Source Section

HsDschResources

pmReportedCqiMimoDs2_12

The UE reported dual stream CQI for stream 2. Note that it is the true (e.g. unadjusted) CQI that is counted. This counter is only relevant for UEs using MIMO. Range: Channel Quality with Value 12

Data Source

NodeB

Source Field

pmReportedCqiMimoDs2

Source Section

HsDschResources

pmReportedCqiMimoDs2_13

The UE reported dual stream CQI for stream 2. Note that it is the true (e.g. unadjusted) CQI that is counted. This counter is only relevant for UEs using MIMO. Range: Channel Quality with Value 13

Data Source

NodeB

Source Field

pmReportedCqiMimoDs2

Source Section

HsDschResources

pmReportedCqiMimoDs2_14

The UE reported dual stream CQI for stream 2. Note that it is the true (e.g. unadjusted) CQI that is counted. This counter is only relevant for UEs using MIMO. Range: Channel Quality with Value 14

Data Source

NodeB

Source Field

pmReportedCqiMimoDs2

Source Section

HsDschResources

pmReportedCqiMimoSs_00

The UE reported CQI for single stream CQI. Note that it is the true (unadjusted) CQI that is counted. This counter is only relevant for UEs using MIMO. Range: Channel Quality with Value 0

Data Source

NodeB

Source Field

pmReportedCqiMimoSs

Source Section

HsDschResources

pmReportedCqiMimoSs_01

The UE reported CQI for single stream CQI. Note that it is the true (unadjusted) CQI that is counted. This counter is only relevant for UEs using MIMO. Range: Channel Quality with Value 1

Data Source

NodeB

Source Field

pmReportedCqiMimoSs

Source Section

HsDschResources

pmReportedCqiMimoSs_02

The UE reported CQI for single stream CQI. Note that it is the true (unadjusted) CQI that is counted. This counter is only relevant for UEs using MIMO. Range: Channel Quality with Value 2

Data Source

NodeB

Source Field

pmReportedCqiMimoSs

Source Section

HsDschResources

pmReportedCqiMimoSs_03

The UE reported CQI for single stream CQI. Note that it is the true (unadjusted) CQI that is counted. This counter is only relevant for UEs using MIMO. Range: Channel Quality with Value 3

Data Source

NodeB

Source Field

pmReportedCqiMimoSs

Source Section

HsDschResources

pmReportedCqiMimoSs_04

The UE reported CQI for single stream CQI. Note that it is the true (unadjusted) CQI that is counted. This counter is only relevant for UEs using MIMO. Range: Channel Quality with Value 4

Data Source

NodeB

Source Field

pmReportedCqiMimoSs

Source Section

HsDschResources

pmReportedCqiMimoSs_05

The UE reported CQI for single stream CQI. Note that it is the true (unadjusted) CQI that is counted. This counter is only relevant for UEs using MIMO. Range: Channel Quality with Value 5

Data Source

NodeB

Source Field

pmReportedCqiMimoSs

Source Section

HsDschResources

pmReportedCqiMimoSs_06

The UE reported CQI for single stream CQI. Note that it is the true (unadjusted) CQI that is counted. This counter is only relevant for UEs using MIMO. Range: Channel Quality with Value 6

Data Source

NodeB

Source Field

pmReportedCqiMimoSs

Source Section

HsDschResources

pmReportedCqiMimoSs_07

The UE reported CQI for single stream CQI. Note that it is the true (unadjusted) CQI that is counted. This counter is only relevant for UEs using MIMO. Range: Channel Quality with Value 7

Data Source

NodeB

Source Field

pmReportedCqiMimoSs

Source Section

HsDschResources

pmReportedCqiMimoSs_08

The UE reported CQI for single stream CQI. Note that it is the true (unadjusted) CQI that is counted. This counter is only relevant for UEs using MIMO. Range: Channel Quality with Value 8

Data Source

NodeB

Source Field

pmReportedCqiMimoSs

Source Section

HsDschResources

pmReportedCqiMimoSs_09

The UE reported CQI for single stream CQI. Note that it is the true (unadjusted) CQI that is counted. This counter is only relevant for UEs using MIMO. Range: Channel Quality with Value 9

Data Source

NodeB

Source Field

pmReportedCqiMimoSs

Source Section

HsDschResources

pmReportedCqiMimoSs_10

The UE reported CQI for single stream CQI. Note that it is the true (unadjusted) CQI that is counted. This counter is only relevant for UEs using MIMO. Range: Channel Quality with Value 10

Data Source

NodeB

Source Field

pmReportedCqiMimoSs

Source Section

HsDschResources

pmReportedCqiMimoSs_11

The UE reported CQI for single stream CQI. Note that it is the true (unadjusted) CQI that is counted. This counter is only relevant for UEs using MIMO. Range: Channel Quality with Value 11

Data Source

NodeB

Source Field

pmReportedCqiMimoSs

Source Section

HsDschResources

pmReportedCqiMimoSs_12

The UE reported CQI for single stream CQI. Note that it is the true (unadjusted) CQI that is counted. This counter is only relevant for UEs using MIMO. Range: Channel Quality with Value 12

Data Source

NodeB

Source Field

pmReportedCqiMimoSs

Source Section

HsDschResources

pmReportedCqiMimoSs_13

The UE reported CQI for single stream CQI. Note that it is the true (unadjusted) CQI that is counted. This counter is only relevant for UEs using MIMO. Range: Channel Quality with Value 13

Data Source

NodeB

Source Field

pmReportedCqiMimoSs

Source Section

HsDschResources

pmReportedCqiMimoSs_14

The UE reported CQI for single stream CQI. Note that it is the true (unadjusted) CQI that is counted. This counter is only relevant for UEs using MIMO. Range: Channel Quality with Value 14

Data Source

NodeB

Source Field

pmReportedCqiMimoSs

Source Section

HsDschResources

pmReportedCqiMimoSs_15

The UE reported CQI for single stream CQI. Note that it is the true (unadjusted) CQI that is counted. This counter is only relevant for UEs using MIMO. Range: Channel Quality with Value 15

Data Source

NodeB

Source Field

pmReportedCqiMimoSs

Source Section

HsDschResources

pmReportedCqiMimoSs_16

The UE reported CQI for single stream CQI. Note that it is the true (unadjusted) CQI that is counted. This counter is only relevant for UEs using MIMO. Range: Channel Quality with Value 16

Data Source

NodeB

Source Field

pmReportedCqiMimoSs

Source Section

HsDschResources

pmReportedCqiMimoSs_17

The UE reported CQI for single stream CQI. Note that it is the true (unadjusted) CQI that is counted. This counter is only relevant for UEs using MIMO. Range: Channel Quality with Value 17

Data Source

NodeB

Source Field

pmReportedCqiMimoSs

Source Section

HsDschResources

pmReportedCqiMimoSs_18

The UE reported CQI for single stream CQI. Note that it is the true (unadjusted) CQI that is counted. This counter is only relevant for UEs using MIMO. Range: Channel Quality with Value 18

Data Source

NodeB

Source Field

pmReportedCqiMimoSs

Source Section

HsDschResources

pmReportedCqiMimoSs_19

The UE reported CQI for single stream CQI. Note that it is the true (unadjusted) CQI that is counted. This counter is only relevant for UEs using MIMO. Range: Channel Quality with Value 19

Data Source

NodeB

Source Field

pmReportedCqiMimoSs

Source Section

HsDschResources

pmReportedCqiMimoSs_20

The UE reported CQI for single stream CQI. Note that it is the true (unadjusted) CQI that is counted. This counter is only relevant for UEs using MIMO. Range: Channel Quality with Value 20

Data Source

NodeB

Source Field

pmReportedCqiMimoSs

Source Section

HsDschResources

pmReportedCqiMimoSs_21

The UE reported CQI for single stream CQI. Note that it is the true (unadjusted) CQI that is counted. This counter is only relevant for UEs using MIMO. Range: Channel Quality with Value 21

Data Source

NodeB

Source Field

pmReportedCqiMimoSs

Source Section

HsDschResources

pmReportedCqiMimoSs_22

The UE reported CQI for single stream CQI. Note that it is the true (unadjusted) CQI that is counted. This counter is only relevant for UEs using MIMO. Range: Channel Quality with Value 22

Data Source

NodeB

Source Field

pmReportedCqiMimoSs

Source Section

HsDschResources

pmReportedCqiMimoSs_23

The UE reported CQI for single stream CQI. Note that it is the true (unadjusted) CQI that is counted. This counter is only relevant for UEs using MIMO. Range: Channel Quality with Value 23

Data Source

NodeB

Source Field

pmReportedCqiMimoSs

Source Section

HsDschResources

pmReportedCqiMimoSs_24

The UE reported CQI for single stream CQI. Note that it is the true (unadjusted) CQI that is counted. This counter is only relevant for UEs using MIMO. Range: Channel Quality with Value 24

Data Source

NodeB

Source Field

pmReportedCqiMimoSs

Source Section

HsDschResources

pmReportedCqiMimoSs_25

The UE reported CQI for single stream CQI. Note that it is the true (unadjusted) CQI that is counted. This counter is only relevant for UEs using MIMO. Range: Channel Quality with Value 25

Data Source

NodeB

Source Field

pmReportedCqiMimoSs

Source Section

HsDschResources

pmReportedCqiMimoSs_26

The UE reported CQI for single stream CQI. Note that it is the true (unadjusted) CQI that is counted. This counter is only relevant for UEs using MIMO. Range: Channel Quality with Value 26

Data Source

NodeB

Source Field

pmReportedCqiMimoSs

Source Section

HsDschResources

pmReportedCqiMimoSs_27

The UE reported CQI for single stream CQI. Note that it is the true (unadjusted) CQI that is counted. This counter is only relevant for UEs using MIMO. Range: Channel Quality with Value 27

Data Source

NodeB

Source Field

pmReportedCqiMimoSs

Source Section

HsDschResources

pmReportedCqiMimoSs_28

The UE reported CQI for single stream CQI. Note that it is the true (unadjusted) CQI that is counted. This counter is only relevant for UEs using MIMO. Range: Channel Quality with Value 28

Data Source

NodeB

Source Field

pmReportedCqiMimoSs

Source Section

HsDschResources

pmReportedCqiMimoSs_29

The UE reported CQI for single stream CQI. Note that it is the true (unadjusted) CQI that is counted. This counter is only relevant for UEs using MIMO. Range: Channel Quality with Value 29

Data Source

NodeB

Source Field

pmReportedCqiMimoSs

Source Section

HsDschResources

pmReportedCqiMimoSs_30

The UE reported CQI for single stream CQI. Note that it is the true (unadjusted) CQI that is counted. This counter is only relevant for UEs using MIMO. Range: Channel Quality with Value 30

Data Source

NodeB

Source Field

pmReportedCqiMimoSs

Source Section

HsDschResources

pmReportedCqiMimoSs_31

The UE reported CQI for single stream CQI. Note that it is the true (unadjusted) CQI that is counted. This counter is only relevant for UEs using MIMO. Range: Unreliable CQI (Single & Dual Stream)

Data Source

NodeB

Source Field

pmReportedCqiMimoSs

Source Section

HsDschResources

pmSampleNumHsPdschCodesAdded

Counter that is increased every time the RBS dynamic code addition algorithm is executed.

Data Source

NodeB

Source Field

pmSampleNumHsPdschCodesAdded

Source Section

HsDschResources

pmSamplesCapacityHsDschUsers

Number of samples in pmSumCapacityHsDschUsers (that is, pmSamplesCapacityHsDschUsers = pmSamplesCapacityHsDschUsers + 1, whenever pmSumCapacityHsDschUsers is to be updated).

Data Source

NodeB

Source Field

pmSamplesCapacityHsDschUsers

Source Section

HsDschResources

pmSamplesCapacityHsPdschCodes

Number of samples in pmSumCapacityHsPdschCodes (that is, pmSamplesCapacityHsPdschCodes = pmSamplesCapacityHsPdschCodes + 1, whenever pmSumCapacityHsPdschCodes is to be updated).

Data Source

NodeB

Source Field

pmSamplesCapacityHsPdschCodes

Source Section

HsDschResources

pmSumAckedBits

The number of kbits transmitted at Media Access Control high-speed (MAC-hs) and acknowledged by the User Equipment (UE).

Data Source

NodeB

Source Field

pmSumAckedBits

Source Section

HsDschResources

pmSumAckedBitsSpi00

The number of MAC-hs bits received and acknowledged by the User Equipment (UE). Each counter observes a specific SPI. The different flows are configured ON/OFF using RBS MOM parameter IubDataStreams::schHsFlowControlOnOff.

Data Source

NodeB

Source Field

pmSumAckedBitsSpi00

Source Section

HsDschResources

pmSumAckedBitsSpi01

The number of MAC-hs bits received and acknowledged by the User Equipment (UE). Each counter observes a specific SPI. The different flows are configured ON/OFF using RBS MOM parameter IubDataStreams::schHsFlowControlOnOff.

Data Source

NodeB

Source Field

pmSumAckedBitsSpi01

Source Section

HsDschResources

pmSumAckedBitsSpi02

The number of MAC-hs bits received and acknowledged by the User Equipment (UE). Each counter observes a specific SPI. The different flows are configured ON/OFF using RBS MOM parameter IubDataStreams::schHsFlowControlOnOff.

Data Source

NodeB

Source Field

pmSumAckedBitsSpi02

Source Section

HsDschResources

pmSumAckedBitsSpi03

The number of MAC-hs bits received and acknowledged by the User Equipment (UE). Each counter observes a specific SPI. The different flows are configured ON/OFF using RBS MOM parameter IubDataStreams::schHsFlowControlOnOff.

Data Source

NodeB

Source Field

pmSumAckedBitsSpi03

Source Section

HsDschResources

pmSumAckedBitsSpi04

The number of MAC-hs bits received and acknowledged by the User Equipment (UE). Each counter observes a specific SPI. The different flows are configured ON/OFF using RBS MOM parameter IubDataStreams::schHsFlowControlOnOff.

Data Source

NodeB

Source Field

pmSumAckedBitsSpi04

Source Section

HsDschResources

pmSumAckedBitsSpi05

The number of MAC-hs bits received and acknowledged by the User Equipment (UE). Each counter observes a specific SPI. The different flows are configured ON/OFF using RBS MOM parameter IubDataStreams::schHsFlowControlOnOff.

Data Source

NodeB

Source Field

pmSumAckedBitsSpi05

Source Section

HsDschResources

pmSumAckedBitsSpi06

The number of MAC-hs bits received and acknowledged by the User Equipment (UE). Each counter observes a specific SPI. The different flows are configured ON/OFF using RBS MOM parameter IubDataStreams::schHsFlowControlOnOff.

Data Source

NodeB

Source Field

pmSumAckedBitsSpi06

Source Section

HsDschResources

pmSumAckedBitsSpi07

The number of MAC-hs bits received and acknowledged by the User Equipment (UE). Each counter observes a specific SPI. The different flows are configured ON/OFF using RBS MOM parameter IubDataStreams::schHsFlowControlOnOff.

Data Source

NodeB

Source Field

pmSumAckedBitsSpi07

Source Section

HsDschResources

pmSumAckedBitsSpi08

The number of MAC-hs bits received and acknowledged by the User Equipment (UE). Each counter observes a specific SPI. The different flows are configured ON/OFF using RBS MOM parameter IubDataStreams::schHsFlowControlOnOff.

Data Source

NodeB

Source Field

pmSumAckedBitsSpi08

Source Section

HsDschResources

pmSumAckedBitsSpi09

The number of MAC-hs bits received and acknowledged by the User Equipment (UE). Each counter observes a specific SPI. The different flows are configured ON/OFF using RBS MOM parameter IubDataStreams::schHsFlowControlOnOff.

Data Source

NodeB

Source Field

pmSumAckedBitsSpi09

Source Section

HsDschResources

pmSumAckedBitsSpi10

The number of MAC-hs bits received and acknowledged by the User Equipment (UE). Each counter observes a specific SPI. The different flows are configured ON/OFF using RBS MOM parameter IubDataStreams::schHsFlowControlOnOff.

Data Source

NodeB

Source Field

pmSumAckedBitsSpi10

Source Section

HsDschResources

pmSumAckedBitsSpi11

The number of MAC-hs bits received and acknowledged by the User Equipment (UE). Each counter observes a specific SPI. The different flows are configured ON/OFF using RBS MOM parameter IubDataStreams::schHsFlowControlOnOff.

Data Source

NodeB

Source Field

pmSumAckedBitsSpi11

Source Section

HsDschResources

pmSumAckedBitsSpi12

The number of MAC-hs bits received and acknowledged by the User Equipment (UE). Each counter observes a specific SPI. The different flows are configured ON/OFF using RBS MOM parameter IubDataStreams::schHsFlowControlOnOff.

Data Source

NodeB

Source Field

pmSumAckedBitsSpi12

Source Section

HsDschResources

pmSumAckedBitsSpi13

The number of MAC-hs bits received and acknowledged by the User Equipment (UE). Each counter observes a specific SPI. The different flows are configured ON/OFF using RBS MOM parameter IubDataStreams::schHsFlowControlOnOff.

Data Source

NodeB

Source Field

pmSumAckedBitsSpi13

Source Section

HsDschResources

pmSumAckedBitsSpi14

The number of MAC-hs bits received and acknowledged by the User Equipment (UE). Each counter observes a specific SPI. The different flows are configured ON/OFF using RBS MOM parameter IubDataStreams::schHsFlowControlOnOff.

Data Source

NodeB

Source Field

pmSumAckedBitsSpi14

Source Section

HsDschResources

pmSumAckedBitsSpi15

The number of MAC-hs bits received and acknowledged by the User Equipment (UE). Each counter observes a specific SPI. The different flows are configured ON/OFF using RBS MOM parameter IubDataStreams::schHsFlowControlOnOff.

Data Source

NodeB

Source Field

pmSumAckedBitsSpi15

Source Section

HsDschResources

pmSumCapacityHsDschUsers

Aggregate of all sample values (measurement_value) recorded within the ROP for number of HS-DSCH users.

Data Source

NodeB

Source Field

pmSumCapacityHsDschUsers

Source Section

HsDschResources

pmSumCapacityHsPdschCodes

Aggregate of all sample values (measurement_value) recorded within the ROP for number of used HS-PDSCH codes.

Data Source

NodeB

Source Field

pmSumCapacityHsPdschCodes

Source Section

HsDschResources

pmSumDelaySpi00

Measurements to observe the sum of the delay of the transmitted data for scheduling priority class 00-15 during a ROP period before it is scheduled. Each counter observes a specific SPI. The different flows are configured ON/OFF using RBS MOM parameter IubDataStreams::schHsFlowControlOnOff.

Data Source

NodeB

Source Field

pmSumDelaySpi00

Source Section

HsDschResources

pmSumDelaySpi01

Measurements to observe the sum of the delay of the transmitted data for scheduling priority class 00-15 during a ROP period before it is scheduled. Each counter observes a specific SPI. The different flows are configured ON/OFF using RBS MOM parameter IubDataStreams::schHsFlowControlOnOff.

Data Source

NodeB

Source Field

pmSumDelaySpi01

Source Section

HsDschResources

pmSumDelaySpi02

Measurements to observe the sum of the delay of the transmitted data for scheduling priority class 00-15 during a ROP period before it is scheduled. Each counter observes a specific SPI. The different flows are configured ON/OFF using RBS MOM parameter IubDataStreams::schHsFlowControlOnOff.

Data Source

NodeB

Source Field

pmSumDelaySpi02

Source Section

HsDschResources

pmSumDelaySpi03

Measurements to observe the sum of the delay of the transmitted data for scheduling priority class 00-15 during a ROP period before it is scheduled. Each counter observes a specific SPI. The different flows are configured ON/OFF using RBS MOM parameter IubDataStreams::schHsFlowControlOnOff.

Data Source

NodeB

Source Field

pmSumDelaySpi03

Source Section

HsDschResources

pmSumDelaySpi04

Measurements to observe the sum of the delay of the transmitted data for scheduling priority class 00-15 during a ROP period before it is scheduled. Each counter observes a specific SPI. The different flows are configured ON/OFF using RBS MOM parameter IubDataStreams::schHsFlowControlOnOff.

Data Source

NodeB

Source Field

pmSumDelaySpi04

Source Section

HsDschResources

pmSumDelaySpi05

Measurements to observe the sum of the delay of the transmitted data for scheduling priority class 00-15 during a ROP period before it is scheduled. Each counter observes a specific SPI. The different flows are configured ON/OFF using RBS MOM parameter IubDataStreams::schHsFlowControlOnOff.

Data Source

NodeB

Source Field

pmSumDelaySpi05

Source Section

HsDschResources

pmSumDelaySpi06

Measurements to observe the sum of the delay of the transmitted data for scheduling priority class 00-15 during a ROP period before it is scheduled. Each counter observes a specific SPI. The different flows are configured ON/OFF using RBS MOM parameter IubDataStreams::schHsFlowControlOnOff.

Data Source

NodeB

Source Field

pmSumDelaySpi06

Source Section

HsDschResources

pmSumDelaySpi07

Measurements to observe the sum of the delay of the transmitted data for scheduling priority class 00-15 during a ROP period before it is scheduled. Each counter observes a specific SPI. The different flows are configured ON/OFF using RBS MOM parameter IubDataStreams::schHsFlowControlOnOff.

Data Source

NodeB

Source Field

pmSumDelaySpi07

Source Section

HsDschResources

pmSumDelaySpi08

Measurements to observe the sum of the delay of the transmitted data for scheduling priority class 00-15 during a ROP period before it is scheduled. Each counter observes a specific SPI. The different flows are configured ON/OFF using RBS MOM parameter IubDataStreams::schHsFlowControlOnOff.

Data Source

NodeB

Source Field

pmSumDelaySpi08

Source Section

HsDschResources

pmSumDelaySpi09

Measurements to observe the sum of the delay of the transmitted data for scheduling priority class 00-15 during a ROP period before it is scheduled. Each counter observes a specific SPI. The different flows are configured ON/OFF using RBS MOM parameter IubDataStreams::schHsFlowControlOnOff.

Data Source

NodeB

Source Field

pmSumDelaySpi09

Source Section

HsDschResources

pmSumDelaySpi10

Measurements to observe the sum of the delay of the transmitted data for scheduling priority class 00-15 during a ROP period before it is scheduled. Each counter observes a specific SPI.

The different flows are configured ON/OFF using RBS MOM parameter IubDataStreams::schHsFlowControlOnOff.

Data Source

NodeB

Source Field

pmSumDelaySpi10

Source Section

HsDschResources

pmSumDelaySpi11

Measurements to observe the sum of the delay of the transmitted data for scheduling priority class 00-15 during a ROP period before it is scheduled. Each counter observes a specific SPI. The different flows are configured ON/OFF using RBS MOM parameter IubDataStreams::schHsFlowControlOnOff.

Data Source

NodeB

Source Field

pmSumDelaySpi11

Source Section

HsDschResources

pmSumDelaySpi12

Measurements to observe the sum of the delay of the transmitted data for scheduling priority class 00-15 during a ROP period before it is scheduled. Each counter observes a specific SPI. The different flows are configured ON/OFF using RBS MOM parameter IubDataStreams::schHsFlowControlOnOff.

Data Source

NodeB

Source Field

pmSumDelaySpi12

Source Section

HsDschResources

pmSumDelaySpi13

Measurements to observe the sum of the delay of the transmitted data for scheduling priority class 00-15 during a ROP period before it is scheduled. Each counter observes a specific SPI. The different flows are configured ON/OFF using RBS MOM parameter IubDataStreams::schHsFlowControlOnOff.

Data Source

NodeB

Source Field

pmSumDelaySpi13

Source Section

HsDschResources

pmSumDelaySpi14

Measurements to observe the sum of the delay of the transmitted data for scheduling priority class 00-15 during a ROP period before it is scheduled. Each counter observes a specific SPI. The different flows are configured ON/OFF using RBS MOM parameter IubDataStreams::schHsFlowControlOnOff.

Data Source

NodeB

Source Field

pmSumDelaySpi14

Source Section

HsDschResources

pmSumDelaySpi15

Measurements to observe the sum of the delay of the transmitted data for scheduling priority class 00-15 during a ROP period before it is scheduled. Each counter observes a specific SPI. The different flows are configured ON/OFF using RBS MOM parameter IubDataStreams::schHsFlowControlOnOff.

Data Source

NodeB

Source Field

pmSumDelaySpi15

Source Section

HsDschResources

pmSumJitterSpi00

Measurements to observe the sum of the delay jitter of the transmitted data for scheduling priority class 00-15 during a ROP period before it is scheduled. The jitter delay is defined as a time difference between current delay and the previous one. Each counter observes a specific SPI. The different flows are configured ON/OFF using RBS MOM parameter IubDataStreams::schHsFlowControlOnOff.

Data Source

NodeB

Source Field

pmSumJitterSpi00

Source Section

HsDschResources

pmSumJitterSpi01

Measurements to observe the sum of the delay jitter of the transmitted data for scheduling priority class 00-15 during a ROP period before it is scheduled. The jitter delay is defined as a time difference between current delay and the previous one. Each counter observes a specific SPI. The different flows are configured ON/OFF using RBS MOM parameter IubDataStreams::schHsFlowControlOnOff.

Data Source

NodeB

Source Field

pmSumJitterSpi01

Source Section

HsDschResources

pmSumJitterSpi02

Measurements to observe the sum of the delay jitter of the transmitted data for scheduling priority class 00-15 during a ROP period before it is scheduled. The jitter delay is defined as a time difference between current delay and the previous one. Each counter observes a specific SPI. The different flows are configured ON/OFF using RBS MOM parameter IubDataStreams::schHsFlowControlOnOff.

Data Source

NodeB

Source Field

pmSumJitterSpi02

Source Section

HsDschResources

pmSumJitterSpi03

Measurements to observe the sum of the delay jitter of the transmitted data for scheduling priority class 00-15 during a ROP period before it is scheduled. The jitter delay is defined as a time difference between current delay and the previous one. Each counter observes a specific SPI. The different flows are configured ON/OFF using RBS MOM parameter IubDataStreams::schHsFlowControlOnOff.

Data Source

NodeB

Source Field

pmSumJitterSpi03

Source Section

HsDschResources

pmSumJitterSpi04

Measurements to observe the sum of the delay jitter of the transmitted data for scheduling priority class 00-15 during a ROP period before it is scheduled. The jitter delay is defined as a time difference between current delay and the previous one. Each counter observes a specific SPI. The different flows are configured ON/OFF using RBS MOM parameter IubDataStreams::schHsFlowControlOnOff.

Data Source

NodeB

Source Field

pmSumJitterSpi04

Source Section

HsDschResources

pmSumJitterSpi05

Measurements to observe the sum of the delay jitter of the transmitted data for scheduling priority class 00-15 during a ROP period before it is scheduled. The jitter delay is defined as a time difference between current delay and the previous one. Each counter observes a specific SPI. The different flows are configured ON/OFF using RBS MOM parameter IubDataStreams::schHsFlowControlOnOff.

Data Source

NodeB

Source Field

pmSumJitterSpi05

Source Section

HsDschResources

pmSumJitterSpi06

Measurements to observe the sum of the delay jitter of the transmitted data for scheduling priority class 00-15 during a ROP period before it is scheduled. The jitter delay is defined as a time difference between current delay and the previous one. Each counter observes a specific SPI. The different flows are configured ON/OFF using RBS MOM parameter IubDataStreams::schHsFlowControlOnOff.

Data Source

NodeB

Source Field

pmSumJitterSpi06

Source Section

HsDschResources

pmSumJitterSpi07

Measurements to observe the sum of the delay jitter of the transmitted data for scheduling priority class 00-15 during a ROP period before it is scheduled. The jitter delay is defined as a time difference between current delay and the previous one. Each counter observes a specific SPI. The different flows are configured ON/OFF using RBS MOM parameter IubDataStreams::schHsFlowControlOnOff.

Data Source

NodeB

Source Field

pmSumJitterSpi07

Source Section

HsDschResources

pmSumJitterSpi08

Measurements to observe the sum of the delay jitter of the transmitted data for scheduling priority class 00-15 during a ROP period before it is scheduled. The jitter delay is defined as a time difference between current delay and the previous one. Each counter observes a specific SPI. The different flows are configured ON/OFF using RBS MOM parameter IubDataStreams::schHsFlowControlOnOff.

Data Source

NodeB

Source Field

pmSumJitterSpi08

Source Section

HsDschResources

pmSumJitterSpi09

Measurements to observe the sum of the delay jitter of the transmitted data for scheduling priority class 00-15 during a ROP period before it is scheduled. The jitter delay is defined as a time difference between current delay and the previous one. Each counter observes a specific SPI. The different flows are configured ON/OFF using RBS MOM parameter IubDataStreams::schHsFlowControlOnOff.

Data Source

NodeB

Source Field

pmSumJitterSpi09

Source Section

HsDschResources

pmSumJitterSpi10

Measurements to observe the sum of the delay jitter of the transmitted data for scheduling priority class 00-15 during a ROP period before it is scheduled. The jitter delay is defined as a time difference between current delay and the previous one. Each counter observes a specific SPI. The different flows are configured ON/OFF using RBS MOM parameter IubDataStreams::schHsFlowControlOnOff.

Data Source

NodeB

Source Field

pmSumJitterSpi10

Source Section

HsDschResources

pmSumJitterSpi11

Measurements to observe the sum of the delay jitter of the transmitted data for scheduling priority class 00-15 during a ROP period before it is scheduled. The jitter delay is defined as a time difference between current delay and the previous one. Each counter observes a specific SPI. The different flows are configured ON/OFF using RBS MOM parameter IubDataStreams::schHsFlowControlOnOff.

Data Source

NodeB

Source Field

pmSumJitterSpi11

Source Section

HsDschResources

pmSumJitterSpi12

Measurements to observe the sum of the delay jitter of the transmitted data for scheduling priority class 00-15 during a ROP period before it is scheduled. The jitter delay is defined as a time difference between current delay and the previous one. Each counter observes a specific SPI. The different flows are configured ON/OFF using RBS MOM parameter IubDataStreams::schHsFlowControlOnOff.

Data Source

NodeB

Source Field

pmSumJitterSpi12

Source Section

HsDschResources

pmSumJitterSpi13

Measurements to observe the sum of the delay jitter of the transmitted data for scheduling priority class 00-15 during a ROP period before it is scheduled. The jitter delay is defined as a time difference between current delay and the previous one. Each counter observes a specific SPI. The different flows are configured ON/OFF using RBS MOM parameter IubDataStreams::schHsFlowControlOnOff.

Data Source

NodeB

Source Field

pmSumJitterSpi13

Source Section

HsDschResources

pmSumJitterSpi14

Measurements to observe the sum of the delay jitter of the transmitted data for scheduling priority class 00-15 during a ROP period before it is scheduled. The jitter delay is defined as a time difference between current delay and the previous one. Each counter observes a specific SPI. The different flows are configured ON/OFF using RBS MOM parameter IubDataStreams::schHsFlowControlOnOff.

Data Source

NodeB

Source Field

pmSumJitterSpi14

Source Section

HsDschResources

pmSumJitterSpi15

Measurements to observe the sum of the delay jitter of the transmitted data for scheduling priority class 00-15 during a ROP period before it is scheduled. The jitter delay is defined as a time difference between current delay and the previous one. Each counter observes a specific SPI. The different flows are configured ON/OFF using RBS MOM parameter IubDataStreams::schHsFlowControlOnOff.

Data Source

NodeB

Source Field

pmSumJitterSpi15

Source Section

HsDschResources

pmSumNonEmptyUserBuffers

The number of user buffers with data in the buffer.

Data Source

NodeB

Source Field

pmSumNonEmptyUserBuffers

Source Section

HsDschResources

pmSumNonEmUsrBuffSpi00

Measurements to observe the number of user buffers for scheduling priority class 00-15 with data in the buffer for each 2 ms subframes. Each counter observes a specific SPI. The different flows are configured ON/OFF using RBS MOM parameter IubDataStreams::schHsFlowControlOnOff.

Data Source

NodeB

Source Field

pmSumNonEmptyUserBuffersSpi00

Source Section

HsDschResources

pmSumNonEmUsrBuffSpi01

Measurements to observe the number of user buffers for scheduling priority class 00-15 with data in the buffer for each 2 ms subframes. Each counter observes a specific SPI. The different flows are configured ON/OFF using RBS MOM parameter IubDataStreams::schHsFlowControlOnOff.

Data Source

NodeB

Source Field

pmSumNonEmptyUserBuffersSpi01

Source Section

HsDschResources

pmSumNonEmUsrBuffSpi02

Measurements to observe the number of user buffers for scheduling priority class 00-15 with data in the buffer for each 2 ms subframes. Each counter observes a specific SPI. The different flows are configured ON/OFF using RBS MOM parameter IubDataStreams::schHsFlowControlOnOff.

Data Source

NodeB

Source Field

pmSumNonEmptyUserBuffersSpi02

Source Section

HsDschResources

pmSumNonEmUsrBuffSpi03

Measurements to observe the number of user buffers for scheduling priority class 00-15 with data in the buffer for each 2 ms subframes. Each counter observes a specific SPI. The different flows are configured ON/OFF using RBS MOM parameter IubDataStreams::schHsFlowControlOnOff.

Data Source

NodeB

Source Field

pmSumNonEmptyUserBuffersSpi03

Source Section

HsDschResources

pmSumNonEmUsrBuffSpi04

Measurements to observe the number of user buffers for scheduling priority class 00-15 with data in the buffer for each 2 ms subframes. Each counter observes a specific SPI. The different flows are configured ON/OFF using RBS MOM parameter IubDataStreams::schHsFlowControlOnOff.

Data Source

NodeB

Source Field

pmSumNonEmptyUserBuffersSpi04

Source Section

HsDschResources

pmSumNonEmUsrBuffSpi05

Measurements to observe the number of user buffers for scheduling priority class 00-15 with data in the buffer for each 2 ms subframes. Each counter observes a specific SPI. The different

flows are configured ON/OFF using RBS MOM parameter IubDataStreams::schHsFlowControlOnOff.

Data Source

NodeB

Source Field

pmSumNonEmptyUserBuffersSpi05

Source Section

HsDschResources

pmSumNonEmUsrBuffSpi06

Measurements to observe the number of user buffers for scheduling priority class 00-15 with data in the buffer for each 2 ms subframes. Each counter observes a specific SPI. The different flows are configured ON/OFF using RBS MOM parameter IubDataStreams::schHsFlowControlOnOff.

Data Source

NodeB

Source Field

pmSumNonEmptyUserBuffersSpi06

Source Section

HsDschResources

pmSumNonEmUsrBuffSpi07

Measurements to observe the number of user buffers for scheduling priority class 00-15 with data in the buffer for each 2 ms subframes. Each counter observes a specific SPI. The different flows are configured ON/OFF using RBS MOM parameter IubDataStreams::schHsFlowControlOnOff.

Data Source

NodeB

Source Field

pmSumNonEmptyUserBuffersSpi07

Source Section

HsDschResources

pmSumNonEmUsrBuffSpi08

Measurements to observe the number of user buffers for scheduling priority class 00-15 with data in the buffer for each 2 ms subframes. Each counter observes a specific SPI. The different flows are configured ON/OFF using RBS MOM parameter IubDataStreams::schHsFlowControlOnOff.

Data Source

NodeB

Source Field

pmSumNonEmptyUserBuffersSpi08

Source Section

HsDschResources

pmSumNonEmUsrBuffSpi09

Measurements to observe the number of user buffers for scheduling priority class 00-15 with data in the buffer for each 2 ms subframes. Each counter observes a specific SPI. The different flows are configured ON/OFF using RBS MOM parameter IubDataStreams::schHsFlowControlOnOff.

Data Source

NodeB

Source Field

pmSumNonEmptyUserBuffersSpi09

Source Section

HsDschResources

pmSumNonEmUsrBuffSpi10

Measurements to observe the number of user buffers for scheduling priority class 00-15 with data in the buffer for each 2 ms subframes. Each counter observes a specific SPI. The different flows are configured ON/OFF using RBS MOM parameter IubDataStreams::schHsFlowControlOnOff.

Data Source

NodeB

Source Field

pmSumNonEmptyUserBuffersSpi10

Source Section

HsDschResources

pmSumNonEmUsrBuffSpi11

Measurements to observe the number of user buffers for scheduling priority class 00-15 with data in the buffer for each 2 ms subframes. Each counter observes a specific SPI. The different flows are configured ON/OFF using RBS MOM parameter IubDataStreams::schHsFlowControlOnOff.

Data Source

NodeB

Source Field

pmSumNonEmptyUserBuffersSpi11

Source Section

HsDschResources

pmSumNonEmUsrBuffSpi12

Measurements to observe the number of user buffers for scheduling priority class 00-15 with data in the buffer for each 2 ms subframes. Each counter observes a specific SPI. The different flows are configured ON/OFF using RBS MOM parameter IubDataStreams::schHsFlowControlOnOff.

Data Source

NodeB

Source Field

pmSumNonEmptyUserBuffersSpi12

Source Section

HsDschResources

pmSumNonEmUsrBuffSpi13

Measurements to observe the number of user buffers for scheduling priority class 00-15 with data in the buffer for each 2 ms subframes. Each counter observes a specific SPI. The different flows are configured ON/OFF using RBS MOM parameter IubDataStreams::schHsFlowControlOnOff.

Data Source

NodeB

Source Field

pmSumNonEmptyUserBuffersSpi13

Source Section

HsDschResources

pmSumNonEmUsrBuffSpi14

Measurements to observe the number of user buffers for scheduling priority class 00-15 with data in the buffer for each 2 ms subframes. Each counter observes a specific SPI. The different flows are configured ON/OFF using RBS MOM parameter IubDataStreams::schHsFlowControlOnOff.

Data Source

NodeB

Source Field

pmSumNonEmptyUserBuffersSpi14

Source Section

HsDschResources

pmSumNonEmUsrBuffSpi15

Measurements to observe the number of user buffers for scheduling priority class 00-15 with data in the buffer for each 2 ms subframes. Each counter observes a specific SPI. The different flows are configured ON/OFF using RBS MOM parameter IubDataStreams::schHsFlowControlOnOff.

Data Source

NodeB

Source Field

pmSumNonEmptyUserBuffersSpi15

Source Section

HsDschResources

pmSumNoOfUsersSpi00

Generic counters to observe the total number of users for scheduling priority class 00-15 selected for each 2 ms subframe that is transmitted in the cell. Each counter observes a specific SPI. The different flows are configured ON/OFF using RBS MOM parameter IubDataStreams::schHsFlowControlOnOff.

Data Source

NodeB

Source Field

pmSumNoOfUsersSpi00

Source Section

HsDschResources

pmSumNoOfUsersSpi01

Generic counters to observe the total number of users for scheduling priority class 00-15 selected for each 2 ms subframe that is transmitted in the cell. Each counter observes a specific SPI. The different flows are configured ON/OFF using RBS MOM parameter IubDataStreams::schHsFlowControlOnOff.

Data Source

NodeB

Source Field

pmSumNoOfUsersSpi01

Source Section

HsDschResources

pmSumNoOfUsersSpi02

Generic counters to observe the total number of users for scheduling priority class 00-15 selected for each 2 ms subframe that is transmitted in the cell. Each counter observes a specific

SPI. The different flows are configured ON/OFF using RBS MOM parameter IubDataStreams::schHsFlowControlOnOff.

Data Source

NodeB

Source Field

pmSumNoOfUsersSpi02

Source Section

HsDschResources

pmSumNoOfUsersSpi03

Generic counters to observe the total number of users for scheduling priority class 00-15 selected for each 2 ms subframe that is transmitted in the cell. Each counter observes a specific SPI. The different flows are configured ON/OFF using RBS MOM parameter IubDataStreams::schHsFlowControlOnOff.

Data Source

NodeB

Source Field

pmSumNoOfUsersSpi03

Source Section

HsDschResources

pmSumNoOfUsersSpi04

Generic counters to observe the total number of users for scheduling priority class 00-15 selected for each 2 ms subframe that is transmitted in the cell. Each counter observes a specific SPI. The different flows are configured ON/OFF using RBS MOM parameter IubDataStreams::schHsFlowControlOnOff.

Data Source

NodeB

Source Field

pmSumNoOfUsersSpi04

Source Section

HsDschResources

pmSumNoOfUsersSpi05

Generic counters to observe the total number of users for scheduling priority class 00-15 selected for each 2 ms subframe that is transmitted in the cell. Each counter observes a specific SPI. The different flows are configured ON/OFF using RBS MOM parameter IubDataStreams::schHsFlowControlOnOff.

Data Source

NodeB

Source Field

pmSumNoOfUsersSpi05

Source Section

HsDschResources

pmSumNoOfUsersSpi06

Generic counters to observe the total number of users for scheduling priority class 00-15 selected for each 2 ms subframe that is transmitted in the cell. Each counter observes a specific SPI. The different flows are configured ON/OFF using RBS MOM parameter IubDataStreams::schHsFlowControlOnOff.

Data Source

NodeB

Source Field

pmSumNoOfUsersSpi06

Source Section

HsDschResources

pmSumNoOfUsersSpi07

Generic counters to observe the total number of users for scheduling priority class 00-15 selected for each 2 ms subframe that is transmitted in the cell. Each counter observes a specific SPI. The different flows are configured ON/OFF using RBS MOM parameter IubDataStreams::schHsFlowControlOnOff.

Data Source

NodeB

Source Field

pmSumNoOfUsersSpi07

Source Section

HsDschResources

pmSumNoOfUsersSpi08

Generic counters to observe the total number of users for scheduling priority class 00-15 selected for each 2 ms subframe that is transmitted in the cell. Each counter observes a specific SPI. The different flows are configured ON/OFF using RBS MOM parameter IubDataStreams::schHsFlowControlOnOff.

Data Source

NodeB

Source Field

pmSumNoOfUsersSpi08

Source Section

HsDschResources

pmSumNoOfUsersSpi09

Generic counters to observe the total number of users for scheduling priority class 00-15 selected for each 2 ms subframe that is transmitted in the cell. Each counter observes a specific SPI. The different flows are configured ON/OFF using RBS MOM parameter IubDataStreams::schHsFlowControlOnOff.

Data Source

NodeB

Source Field

pmSumNoOfUsersSpi09

Source Section

HsDschResources

pmSumNoOfUsersSpi10

Generic counters to observe the total number of users for scheduling priority class 00-15 selected for each 2 ms subframe that is transmitted in the cell. Each counter observes a specific SPI. The different flows are configured ON/OFF using RBS MOM parameter IubDataStreams::schHsFlowControlOnOff.

Data Source

NodeB

Source Field

pmSumNoOfUsersSpi10

Source Section

HsDschResources

pmSumNoOfUsersSpi11

Generic counters to observe the total number of users for scheduling priority class 00-15 selected for each 2 ms subframe that is transmitted in the cell. Each counter observes a specific SPI. The different flows are configured ON/OFF using RBS MOM parameter IubDataStreams::schHsFlowControlOnOff.

Data Source

NodeB

Source Field

pmSumNoOfUsersSpi11

Source Section

HsDschResources

pmSumNoOfUsersSpi12

Generic counters to observe the total number of users for scheduling priority class 00-15 selected for each 2 ms subframe that is transmitted in the cell. Each counter observes a specific SPI. The different flows are configured ON/OFF using RBS MOM parameter IubDataStreams::schHsFlowControlOnOff.

Data Source

NodeB

Source Field

pmSumNoOfUsersSpi12

Source Section

HsDschResources

pmSumNoOfUsersSpi13

Generic counters to observe the total number of users for scheduling priority class 00-15 selected for each 2 ms subframe that is transmitted in the cell. Each counter observes a specific SPI. The different flows are configured ON/OFF using RBS MOM parameter IubDataStreams::schHsFlowControlOnOff.

Data Source

NodeB

Source Field

pmSumNoOfUsersSpi13

Source Section

HsDschResources

pmSumNoOfUsersSpi14

Generic counters to observe the total number of users for scheduling priority class 00-15 selected for each 2 ms subframe that is transmitted in the cell. Each counter observes a specific SPI. The different flows are configured ON/OFF using RBS MOM parameter IubDataStreams::schHsFlowControlOnOff.

Data Source

NodeB

Source Field

pmSumNoOfUsersSpi14

Source Section

HsDschResources

pmSumNoOfUsersSpi15

Generic counters to observe the total number of users for scheduling priority class 00-15 selected for each 2 ms subframe that is transmitted in the cell. Each counter observes a specific

SPI. The different flows are configured ON/OFF using RBS MOM parameter IubDataStreams::schHsFlowControlOnOff.

Data Source

NodeB

Source Field

pmSumNoOfUsersSpi15

Source Section

HsDschResources

pmSumNumHsPdschCodesAdded

Counter for the sum of all codes that are allocated for HS-DSCH (RNC allocation + codes allocated by the RBS dynamic HS-PDSCH code addition algorithm). The measure is taken after limitations due to hardware is enforced.

Data Source

NodeB

Source Field

pmSumNumHsPdschCodesAdded

Source Section

HsDschResources

pmSumOfHsScchUsedPwr_00

HS-SCCH transmitted power per cell. In case more than one HS-SCCH code is used, the registered value is the sum of each individual value. Number of samples in range < 0dBm

Data Source

NodeB

Source Field

pmSumOfHsScchUsedPwr

Source Section

HsDschResources

pmSumOfHsScchUsedPwr_01

HS-SCCH transmitted power per cell. In case more than one HS-SCCH code is used, the registered value is the sum of each individual value. Number of samples in range 0..0.5dBm

Data Source

NodeB

Source Field

pmSumOfHsScchUsedPwr

Source Section

HsDschResources

pmSumOfHsScchUsedPwr_02

HS-SCCH transmitted power per cell. In case more than one HS-SCCH code is used, the registered value is the sum of each individual value. Number of samples in range 0.5..1dBm

Data Source

NodeB

Source Field

pmSumOfHsScchUsedPwr

Source Section

HsDschResources

pmSumOfHsScchUsedPwr_03

HS-SCCH transmitted power per cell. In case more than one HS-SCCH code is used, the registered value is the sum of each individual value. Number of samples in range 1..1.5dBm

Data Source

NodeB

Source Field

pmSumOfHsScchUsedPwr

Source Section

HsDschResources

pmSumOfHsScchUsedPwr_04

HS-SCCH transmitted power per cell. In case more than one HS-SCCH code is used, the registered value is the sum of each individual value. Number of samples in range 1.5..2dBm

Data Source

NodeB

Source Field

pmSumOfHsScchUsedPwr

Source Section

HsDschResources

pmSumOfHsScchUsedPwr_05

HS-SCCH transmitted power per cell. In case more than one HS-SCCH code is used, the registered value is the sum of each individual value. Number of samples in range 2..2.5dBm

Data Source

NodeB

Source Field

pmSumOfHsScchUsedPwr

Source Section

HsDschResources

pmSumOfHsScchUsedPwr_06

HS-SCCH transmitted power per cell. In case more than one HS-SCCH code is used, the registered value is the sum of each individual value. Number of samples in range 2.5..3dBm

Data Source

NodeB

Source Field

pmSumOfHsScchUsedPwr

Source Section

HsDschResources

pmSumOfHsScchUsedPwr_07

HS-SCCH transmitted power per cell. In case more than one HS-SCCH code is used, the registered value is the sum of each individual value. Number of samples in range 3..3.5dBm

Data Source

NodeB

Source Field

pmSumOfHsScchUsedPwr

Source Section

HsDschResources

pmSumOfHsScchUsedPwr_08

HS-SCCH transmitted power per cell. In case more than one HS-SCCH code is used, the registered value is the sum of each individual value. Number of samples in range 3.5..4dBm

Data Source

NodeB

Source Field

pmSumOfHsScchUsedPwr

Source Section

HsDschResources

pmSumOfHsScchUsedPwr_09

HS-SCCH transmitted power per cell. In case more than one HS-SCCH code is used, the registered value is the sum of each individual value. Number of samples in range 4..4.5dBm

Data Source

NodeB

Source Field

pmSumOfHsScchUsedPwr

Source Section

HsDschResources

pmSumOfHsScchUsedPwr_10

HS-SCCH transmitted power per cell. In case more than one HS-SCCH code is used, the registered value is the sum of each individual value. Number of samples in range 4.5..5dBm

Data Source

NodeB

Source Field

pmSumOfHsScchUsedPwr

Source Section

HsDschResources

pmSumOfHsScchUsedPwr_100

HS-SCCH transmitted power per cell. In case more than one HS-SCCH code is used, the registered value is the sum of each individual value. Number of samples in range 49.5..50dBm

Data Source

NodeB

Source Field

pmSumOfHsScchUsedPwr

Source Section

HsDschResources

pmSumOfHsScchUsedPwr_101

HS-SCCH transmitted power per cell. In case more than one HS-SCCH code is used, the registered value is the sum of each individual value. Number of samples in range 50..50.5dBm

Data Source

NodeB

Source Field

pmSumOfHsScchUsedPwr

Source Section

HsDschResources

pmSumOfHsScchUsedPwr_102

HS-SCCH transmitted power per cell. In case more than one HS-SCCH code is used, the registered value is the sum of each individual value. Number of samples in range 50.5..MAX_VALUE dBm

Data Source

NodeB

Source Field

pmSumOfHsScchUsedPwr

Source Section

HsDschResources

pmSumOfHsScchUsedPwr_11

HS-SCCH transmitted power per cell. In case more than one HS-SCCH code is used, the registered value is the sum of each individual value. Number of samples in range 5..5.5dBm

Data Source

NodeB

Source Field

pmSumOfHsScchUsedPwr

Source Section

HsDschResources

pmSumOfHsScchUsedPwr_12

HS-SCCH transmitted power per cell. In case more than one HS-SCCH code is used, the registered value is the sum of each individual value. Number of samples in range 5.5..6dBm

Data Source

NodeB

Source Field

pmSumOfHsScchUsedPwr

Source Section

HsDschResources

pmSumOfHsScchUsedPwr_13

HS-SCCH transmitted power per cell. In case more than one HS-SCCH code is used, the registered value is the sum of each individual value. Number of samples in range 6..6.5dBm

Data Source

NodeB

Source Field

pmSumOfHsScchUsedPwr

Source Section

HsDschResources

pmSumOfHsScchUsedPwr_14

HS-SCCH transmitted power per cell. In case more than one HS-SCCH code is used, the registered value is the sum of each individual value. Number of samples in range 6.5..7dBm

Data Source

NodeB

Source Field

pmSumOfHsScchUsedPwr

Source Section

HsDschResources

pmSumOfHsScchUsedPwr_15

HS-SCCH transmitted power per cell. In case more than one HS-SCCH code is used, the registered value is the sum of each individual value. Number of samples in range 7..7.5dBm

Data Source

NodeB

Source Field

pmSumOfHsScchUsedPwr

Source Section

HsDschResources

pmSumOfHsScchUsedPwr_16

HS-SCCH transmitted power per cell. In case more than one HS-SCCH code is used, the registered value is the sum of each individual value. Number of samples in range 7.5..8dBm

Data Source

NodeB

Source Field

pmSumOfHsScchUsedPwr

Source Section

HsDschResources

pmSumOfHsScchUsedPwr_17

HS-SCCH transmitted power per cell. In case more than one HS-SCCH code is used, the registered value is the sum of each individual value. Number of samples in range 8..8.5dBm

Data Source

NodeB

Source Field

pmSumOfHsScchUsedPwr

Source Section

HsDschResources

pmSumOfHsScchUsedPwr_18

HS-SCCH transmitted power per cell. In case more than one HS-SCCH code is used, the registered value is the sum of each individual value. Number of samples in range 8.5..9dBm

Data Source

NodeB

Source Field

pmSumOfHsScchUsedPwr

Source Section

HsDschResources

pmSumOfHsScchUsedPwr_19

HS-SCCH transmitted power per cell. In case more than one HS-SCCH code is used, the registered value is the sum of each individual value. Number of samples in range 9..9.5dBm

Data Source

NodeB

Source Field

pmSumOfHsScchUsedPwr

Source Section

HsDschResources

pmSumOfHsScchUsedPwr_20

HS-SCCH transmitted power per cell. In case more than one HS-SCCH code is used, the registered value is the sum of each individual value. Number of samples in range 9.5..10dBm

Data Source

NodeB

Source Field

pmSumOfHsScchUsedPwr

Source Section

HsDschResources

pmSumOfHsScchUsedPwr_21

HS-SCCH transmitted power per cell. In case more than one HS-SCCH code is used, the registered value is the sum of each individual value. Number of samples in range 10..10.5dBm

Data Source

NodeB

Source Field

pmSumOfHsScchUsedPwr

Source Section

HsDschResources

pmSumOfHsScchUsedPwr_22

HS-SCCH transmitted power per cell. In case more than one HS-SCCH code is used, the registered value is the sum of each individual value. Number of samples in range 10.5..11dBm

Data Source

NodeB

Source Field

pmSumOfHsScchUsedPwr

Source Section

HsDschResources

pmSumOfHsScchUsedPwr_23

HS-SCCH transmitted power per cell. In case more than one HS-SCCH code is used, the registered value is the sum of each individual value. Number of samples in range 11..11.5dBm

Data Source

NodeB

Source Field

pmSumOfHsScchUsedPwr

Source Section

HsDschResources

pmSumOfHsScchUsedPwr_24

HS-SCCH transmitted power per cell. In case more than one HS-SCCH code is used, the registered value is the sum of each individual value. Number of samples in range 11.5..12dBm

Data Source

NodeB

Source Field

pmSumOfHsScchUsedPwr

Source Section

HsDschResources

pmSumOfHsScchUsedPwr_25

HS-SCCH transmitted power per cell. In case more than one HS-SCCH code is used, the registered value is the sum of each individual value. Number of samples in range 12..12.5dBm

Data Source

NodeB

Source Field

pmSumOfHsScchUsedPwr

Source Section

HsDschResources

pmSumOfHsScchUsedPwr_26

HS-SCCH transmitted power per cell. In case more than one HS-SCCH code is used, the registered value is the sum of each individual value. Number of samples in range 12.5..13dBm

Data Source

NodeB

Source Field

pmSumOfHsScchUsedPwr

Source Section

HsDschResources

pmSumOfHsScchUsedPwr_27

HS-SCCH transmitted power per cell. In case more than one HS-SCCH code is used, the registered value is the sum of each individual value. Number of samples in range 13..13.5dBm

Data Source

NodeB

Source Field

pmSumOfHsScchUsedPwr

Source Section

HsDschResources

pmSumOfHsScchUsedPwr_28

HS-SCCH transmitted power per cell. In case more than one HS-SCCH code is used, the registered value is the sum of each individual value. Number of samples in range 13.5..14dBm

Data Source

NodeB

Source Field

pmSumOfHsScchUsedPwr

Source Section

HsDschResources

pmSumOfHsScchUsedPwr_29

HS-SCCH transmitted power per cell. In case more than one HS-SCCH code is used, the registered value is the sum of each individual value. Number of samples in range 14..14.5dBm

Data Source

NodeB

Source Field

pmSumOfHsScchUsedPwr

Source Section

HsDschResources

pmSumOfHsScchUsedPwr_30

HS-SCCH transmitted power per cell. In case more than one HS-SCCH code is used, the registered value is the sum of each individual value. Number of samples in range 14.5..15dBm

Data Source

NodeB

Source Field

pmSumOfHsScchUsedPwr

Source Section

HsDschResources

pmSumOfHsScchUsedPwr_31

HS-SCCH transmitted power per cell. In case more than one HS-SCCH code is used, the registered value is the sum of each individual value. Number of samples in range 15..15.5dBm

Data Source

NodeB

Source Field

pmSumOfHsScchUsedPwr

Source Section

HsDschResources

pmSumOfHsScchUsedPwr_32

HS-SCCH transmitted power per cell. In case more than one HS-SCCH code is used, the registered value is the sum of each individual value. Number of samples in range 15.5..16dBm

Data Source

NodeB

Source Field

pmSumOfHsScchUsedPwr

Source Section

HsDschResources

pmSumOfHsScchUsedPwr_33

HS-SCCH transmitted power per cell. In case more than one HS-SCCH code is used, the registered value is the sum of each individual value. Number of samples in range 16..16.5dBm

Data Source

NodeB

Source Field

pmSumOfHsScchUsedPwr

Source Section

HsDschResources

pmSumOfHsScchUsedPwr_34

HS-SCCH transmitted power per cell. In case more than one HS-SCCH code is used, the registered value is the sum of each individual value. Number of samples in range 16.5..17dBm

Data Source

NodeB

Source Field

pmSumOfHsScchUsedPwr

Source Section

HsDschResources

pmSumOfHsScchUsedPwr_35

HS-SCCH transmitted power per cell. In case more than one HS-SCCH code is used, the registered value is the sum of each individual value. Number of samples in range 17..17.5dBm

Data Source

NodeB

Source Field

pmSumOfHsScchUsedPwr

Source Section

HsDschResources

pmSumOfHsScchUsedPwr_36

HS-SCCH transmitted power per cell. In case more than one HS-SCCH code is used, the registered value is the sum of each individual value. Number of samples in range 17.5..18dBm

Data Source

NodeB

Source Field

pmSumOfHsScchUsedPwr

Source Section

HsDschResources

pmSumOfHsScchUsedPwr_37

HS-SCCH transmitted power per cell. In case more than one HS-SCCH code is used, the registered value is the sum of each individual value. Number of samples in range 18..18.5dBm

Data Source

NodeB

Source Field

pmSumOfHsScchUsedPwr

Source Section

HsDschResources

pmSumOfHsScchUsedPwr_38

HS-SCCH transmitted power per cell. In case more than one HS-SCCH code is used, the registered value is the sum of each individual value. Number of samples in range 18.5..19dBm

Data Source

NodeB

Source Field

pmSumOfHsScchUsedPwr

Source Section

HsDschResources

pmSumOfHsScchUsedPwr_39

HS-SCCH transmitted power per cell. In case more than one HS-SCCH code is used, the registered value is the sum of each individual value. Number of samples in range 19..19.5dBm

Data Source

NodeB

Source Field

pmSumOfHsScchUsedPwr

Source Section

HsDschResources

pmSumOfHsScchUsedPwr_40

HS-SCCH transmitted power per cell. In case more than one HS-SCCH code is used, the registered value is the sum of each individual value. Number of samples in range 19.5..20dBm

Data Source

NodeB

Source Field

pmSumOfHsScchUsedPwr

Source Section

HsDschResources

pmSumOfHsScchUsedPwr_41

HS-SCCH transmitted power per cell. In case more than one HS-SCCH code is used, the registered value is the sum of each individual value. Number of samples in range 20..20.5dBm

Data Source

NodeB

Source Field

pmSumOfHsScchUsedPwr

Source Section

HsDschResources

pmSumOfHsScchUsedPwr_42

HS-SCCH transmitted power per cell. In case more than one HS-SCCH code is used, the registered value is the sum of each individual value. Number of samples in range 20.5..21dBm

Data Source

NodeB

Source Field

pmSumOfHsScchUsedPwr

Source Section

HsDschResources

pmSumOfHsScchUsedPwr_43

HS-SCCH transmitted power per cell. In case more than one HS-SCCH code is used, the registered value is the sum of each individual value. Number of samples in range 21..21.5dBm

Data Source

NodeB

Source Field

pmSumOfHsScchUsedPwr

Source Section

HsDschResources

pmSumOfHsScchUsedPwr_44

HS-SCCH transmitted power per cell. In case more than one HS-SCCH code is used, the registered value is the sum of each individual value. Number of samples in range 21.5..22dBm

Data Source

NodeB

Source Field

pmSumOfHsScchUsedPwr

Source Section

HsDschResources

pmSumOfHsScchUsedPwr_45

HS-SCCH transmitted power per cell. In case more than one HS-SCCH code is used, the registered value is the sum of each individual value. Number of samples in range 22..22.5dBm

Data Source

NodeB

Source Field

pmSumOfHsScchUsedPwr

Source Section

HsDschResources

pmSumOfHsScchUsedPwr_46

HS-SCCH transmitted power per cell. In case more than one HS-SCCH code is used, the registered value is the sum of each individual value. Number of samples in range 22.5..23dBm

Data Source

NodeB

Source Field

pmSumOfHsScchUsedPwr

Source Section

HsDschResources

pmSumOfHsScchUsedPwr_47

HS-SCCH transmitted power per cell. In case more than one HS-SCCH code is used, the registered value is the sum of each individual value. Number of samples in range 23..23.5dBm

Data Source

NodeB

Source Field

pmSumOfHsScchUsedPwr

Source Section

HsDschResources

pmSumOfHsScchUsedPwr_48

HS-SCCH transmitted power per cell. In case more than one HS-SCCH code is used, the registered value is the sum of each individual value. Number of samples in range 23.5..24dBm

Data Source

NodeB

Source Field

pmSumOfHsScchUsedPwr

Source Section

HsDschResources

pmSumOfHsScchUsedPwr_49

HS-SCCH transmitted power per cell. In case more than one HS-SCCH code is used, the registered value is the sum of each individual value. Number of samples in range 24..24.5dBm

Data Source

NodeB

Source Field

pmSumOfHsScchUsedPwr

Source Section

HsDschResources

pmSumOfHsScchUsedPwr_50

HS-SCCH transmitted power per cell. In case more than one HS-SCCH code is used, the registered value is the sum of each individual value. Number of samples in range 24.5..25dBm

Data Source

NodeB

Source Field

pmSumOfHsScchUsedPwr

Source Section

HsDschResources

pmSumOfHsScchUsedPwr_51

HS-SCCH transmitted power per cell. In case more than one HS-SCCH code is used, the registered value is the sum of each individual value. Number of samples in range 25..25.5dBm

Data Source

NodeB

Source Field

pmSumOfHsScchUsedPwr

Source Section

HsDschResources

pmSumOfHsScchUsedPwr_52

HS-SCCH transmitted power per cell. In case more than one HS-SCCH code is used, the registered value is the sum of each individual value. Number of samples in range 25.5..26dBm

Data Source

NodeB

Source Field

pmSumOfHsScchUsedPwr

Source Section

HsDschResources

pmSumOfHsScchUsedPwr_53

HS-SCCH transmitted power per cell. In case more than one HS-SCCH code is used, the registered value is the sum of each individual value. Number of samples in range 26..26.5dBm

Data Source

NodeB

Source Field

pmSumOfHsScchUsedPwr

Source Section

HsDschResources

pmSumOfHsScchUsedPwr_54

HS-SCCH transmitted power per cell. In case more than one HS-SCCH code is used, the registered value is the sum of each individual value. Number of samples in range 26.5..27dBm

Data Source

NodeB

Source Field

pmSumOfHsScchUsedPwr

Source Section

HsDschResources

pmSumOfHsScchUsedPwr_55

HS-SCCH transmitted power per cell. In case more than one HS-SCCH code is used, the registered value is the sum of each individual value. Number of samples in range 27..27.5dBm

Data Source

NodeB

Source Field

pmSumOfHsScchUsedPwr

Source Section

HsDschResources

pmSumOfHsScchUsedPwr_56

HS-SCCH transmitted power per cell. In case more than one HS-SCCH code is used, the registered value is the sum of each individual value. Number of samples in range 27.5..28dBm

Data Source

NodeB

Source Field

pmSumOfHsScchUsedPwr

Source Section

HsDschResources

pmSumOfHsScchUsedPwr_57

HS-SCCH transmitted power per cell. In case more than one HS-SCCH code is used, the registered value is the sum of each individual value. Number of samples in range 28..28.5dBm

Data Source

NodeB

Source Field

pmSumOfHsScchUsedPwr

Source Section

HsDschResources

pmSumOfHsScchUsedPwr_58

HS-SCCH transmitted power per cell. In case more than one HS-SCCH code is used, the registered value is the sum of each individual value. Number of samples in range 28.5..29dBm

Data Source

NodeB

Source Field

pmSumOfHsScchUsedPwr

Source Section

HsDschResources

pmSumOfHsScchUsedPwr_59

HS-SCCH transmitted power per cell. In case more than one HS-SCCH code is used, the registered value is the sum of each individual value. Number of samples in range 29..29.5dBm

Data Source

NodeB

Source Field

pmSumOfHsScchUsedPwr

Source Section

HsDschResources

pmSumOfHsScchUsedPwr_60

HS-SCCH transmitted power per cell. In case more than one HS-SCCH code is used, the registered value is the sum of each individual value. Number of samples in range 29.5..30dBm

Data Source

NodeB

Source Field

pmSumOfHsScchUsedPwr

Source Section

HsDschResources

pmSumOfHsScchUsedPwr_61

HS-SCCH transmitted power per cell. In case more than one HS-SCCH code is used, the registered value is the sum of each individual value. Number of samples in range 30..30.5dBm

Data Source

NodeB

Source Field

pmSumOfHsScchUsedPwr

Source Section

HsDschResources

pmSumOfHsScchUsedPwr_62

HS-SCCH transmitted power per cell. In case more than one HS-SCCH code is used, the registered value is the sum of each individual value. Number of samples in range 30.5..31dBm

Data Source

NodeB

Source Field

pmSumOfHsScchUsedPwr

Source Section

HsDschResources

pmSumOfHsScchUsedPwr_63

HS-SCCH transmitted power per cell. In case more than one HS-SCCH code is used, the registered value is the sum of each individual value. Number of samples in range 31..31.5dBm

Data Source

NodeB

Source Field

pmSumOfHsScchUsedPwr

Source Section

HsDschResources

pmSumOfHsScchUsedPwr_64

HS-SCCH transmitted power per cell. In case more than one HS-SCCH code is used, the registered value is the sum of each individual value. Number of samples in range 31.5..32dBm

Data Source

NodeB

Source Field

pmSumOfHsScchUsedPwr

Source Section

HsDschResources

pmSumOfHsScchUsedPwr_65

HS-SCCH transmitted power per cell. In case more than one HS-SCCH code is used, the registered value is the sum of each individual value. Number of samples in range 32..32.5dBm

Data Source

NodeB

Source Field

pmSumOfHsScchUsedPwr

Source Section

HsDschResources

pmSumOfHsScchUsedPwr_66

HS-SCCH transmitted power per cell. In case more than one HS-SCCH code is used, the registered value is the sum of each individual value. Number of samples in range 32.5..33dBm

Data Source

NodeB

Source Field

pmSumOfHsScchUsedPwr

Source Section

HsDschResources

pmSumOfHsScchUsedPwr_67

HS-SCCH transmitted power per cell. In case more than one HS-SCCH code is used, the registered value is the sum of each individual value. Number of samples in range 33..33.5dBm

Data Source

NodeB

Source Field

pmSumOfHsScchUsedPwr

Source Section

HsDschResources

pmSumOfHsScchUsedPwr_68

HS-SCCH transmitted power per cell. In case more than one HS-SCCH code is used, the registered value is the sum of each individual value. Number of samples in range 33.5..34dBm

Data Source

NodeB

Source Field

pmSumOfHsScchUsedPwr

Source Section

HsDschResources

pmSumOfHsScchUsedPwr_69

HS-SCCH transmitted power per cell. In case more than one HS-SCCH code is used, the registered value is the sum of each individual value. Number of samples in range 34..34.5dBm

Data Source

NodeB

Source Field

pmSumOfHsScchUsedPwr

Source Section

HsDschResources

pmSumOfHsScchUsedPwr_70

HS-SCCH transmitted power per cell. In case more than one HS-SCCH code is used, the registered value is the sum of each individual value. Number of samples in range 34.5..35dBm

Data Source

NodeB

Source Field

pmSumOfHsScchUsedPwr

Source Section

HsDschResources

pmSumOfHsScchUsedPwr_71

HS-SCCH transmitted power per cell. In case more than one HS-SCCH code is used, the registered value is the sum of each individual value. Number of samples in range 35..35.5dBm

Data Source

NodeB

Source Field

pmSumOfHsScchUsedPwr

Source Section

HsDschResources

pmSumOfHsScchUsedPwr_72

HS-SCCH transmitted power per cell. In case more than one HS-SCCH code is used, the registered value is the sum of each individual value. Number of samples in range 35.5..36dBm

Data Source

NodeB

Source Field

pmSumOfHsScchUsedPwr

Source Section

HsDschResources

pmSumOfHsScchUsedPwr_73

HS-SCCH transmitted power per cell. In case more than one HS-SCCH code is used, the registered value is the sum of each individual value. Number of samples in range 36..36.5dBm

Data Source

NodeB

Source Field

pmSumOfHsScchUsedPwr

Source Section

HsDschResources

pmSumOfHsScchUsedPwr_74

HS-SCCH transmitted power per cell. In case more than one HS-SCCH code is used, the registered value is the sum of each individual value. Number of samples in range 36.5..37dBm

Data Source

NodeB

Source Field

pmSumOfHsScchUsedPwr

Source Section

HsDschResources

pmSumOfHsScchUsedPwr_75

HS-SCCH transmitted power per cell. In case more than one HS-SCCH code is used, the registered value is the sum of each individual value. Number of samples in range 37..37.5dBm

Data Source

NodeB

Source Field

pmSumOfHsScchUsedPwr

Source Section

HsDschResources

pmSumOfHsScchUsedPwr_76

HS-SCCH transmitted power per cell. In case more than one HS-SCCH code is used, the registered value is the sum of each individual value. Number of samples in range 37.5..38dBm

Data Source

NodeB

Source Field

pmSumOfHsScchUsedPwr

Source Section

HsDschResources

pmSumOfHsScchUsedPwr_77

HS-SCCH transmitted power per cell. In case more than one HS-SCCH code is used, the registered value is the sum of each individual value. Number of samples in range 38..38.5dBm

Data Source

NodeB

Source Field

pmSumOfHsScchUsedPwr

Source Section

HsDschResources

pmSumOfHsScchUsedPwr_78

HS-SCCH transmitted power per cell. In case more than one HS-SCCH code is used, the registered value is the sum of each individual value. Number of samples in range 38.5..39dBm

Data Source

NodeB

Source Field

pmSumOfHsScchUsedPwr

Source Section

HsDschResources

pmSumOfHsScchUsedPwr_79

HS-SCCH transmitted power per cell. In case more than one HS-SCCH code is used, the registered value is the sum of each individual value. Number of samples in range 39..39.5dBm

Data Source

NodeB

Source Field

pmSumOfHsScchUsedPwr

Source Section

HsDschResources

pmSumOfHsScchUsedPwr_80

HS-SCCH transmitted power per cell. In case more than one HS-SCCH code is used, the registered value is the sum of each individual value. Number of samples in range 39.5..40dBm

Data Source

NodeB

Source Field

pmSumOfHsScchUsedPwr

Source Section

HsDschResources

pmSumOfHsScchUsedPwr_81

HS-SCCH transmitted power per cell. In case more than one HS-SCCH code is used, the registered value is the sum of each individual value. Number of samples in range 40..40.5dBm

Data Source

NodeB

Source Field

pmSumOfHsScchUsedPwr

Source Section

HsDschResources

pmSumOfHsScchUsedPwr_82

HS-SCCH transmitted power per cell. In case more than one HS-SCCH code is used, the registered value is the sum of each individual value. Number of samples in range 40.5..41dBm

Data Source

NodeB

Source Field

pmSumOfHsScchUsedPwr

Source Section

HsDschResources

pmSumOfHsScchUsedPwr_83

HS-SCCH transmitted power per cell. In case more than one HS-SCCH code is used, the registered value is the sum of each individual value. Number of samples in range 41..41.5dBm

Data Source

NodeB

Source Field

pmSumOfHsScchUsedPwr

Source Section

HsDschResources

pmSumOfHsScchUsedPwr_84

HS-SCCH transmitted power per cell. In case more than one HS-SCCH code is used, the registered value is the sum of each individual value. Number of samples in range 41.5..42dBm

Data Source

NodeB

Source Field

pmSumOfHsScchUsedPwr

Source Section

HsDschResources

pmSumOfHsScchUsedPwr_85

HS-SCCH transmitted power per cell. In case more than one HS-SCCH code is used, the registered value is the sum of each individual value. Number of samples in range 42..42.5dBm

Data Source

NodeB

Source Field

pmSumOfHsScchUsedPwr

Source Section

HsDschResources

pmSumOfHsScchUsedPwr_86

HS-SCCH transmitted power per cell. In case more than one HS-SCCH code is used, the registered value is the sum of each individual value. Number of samples in range 42.5..43dBm

Data Source

NodeB

Source Field

pmSumOfHsScchUsedPwr

Source Section

HsDschResources

pmSumOfHsScchUsedPwr_87

HS-SCCH transmitted power per cell. In case more than one HS-SCCH code is used, the registered value is the sum of each individual value. Number of samples in range 43..43.5dBm

Data Source

NodeB

Source Field

pmSumOfHsScchUsedPwr

Source Section

HsDschResources

pmSumOfHsScchUsedPwr_88

HS-SCCH transmitted power per cell. In case more than one HS-SCCH code is used, the registered value is the sum of each individual value. Number of samples in range 43.5..44dBm

Data Source

NodeB

Source Field

pmSumOfHsScchUsedPwr

Source Section

HsDschResources

pmSumOfHsScchUsedPwr_89

HS-SCCH transmitted power per cell. In case more than one HS-SCCH code is used, the registered value is the sum of each individual value. Number of samples in range 44..44.5dBm

Data Source

NodeB

Source Field

pmSumOfHsScchUsedPwr

Source Section

HsDschResources

pmSumOfHsScchUsedPwr_90

HS-SCCH transmitted power per cell. In case more than one HS-SCCH code is used, the registered value is the sum of each individual value. Number of samples in range 44.5..45dBm

Data Source

NodeB

Source Field

pmSumOfHsScchUsedPwr

Source Section

HsDschResources

pmSumOfHsScchUsedPwr_91

HS-SCCH transmitted power per cell. In case more than one HS-SCCH code is used, the registered value is the sum of each individual value. Number of samples in range 45..45.5dBm

Data Source

NodeB

Source Field

pmSumOfHsScchUsedPwr

Source Section

HsDschResources

pmSumOfHsScchUsedPwr_92

HS-SCCH transmitted power per cell. In case more than one HS-SCCH code is used, the registered value is the sum of each individual value. Number of samples in range 45.5..46dBm

Data Source

NodeB

Source Field

pmSumOfHsScchUsedPwr

Source Section

HsDschResources

pmSumOfHsScchUsedPwr_93

HS-SCCH transmitted power per cell. In case more than one HS-SCCH code is used, the registered value is the sum of each individual value. Number of samples in range 46..46.5dBm

Data Source

NodeB

Source Field

pmSumOfHsScchUsedPwr

Source Section

HsDschResources

pmSumOfHsScchUsedPwr_94

HS-SCCH transmitted power per cell. In case more than one HS-SCCH code is used, the registered value is the sum of each individual value. Number of samples in range 46.5..47dBm

Data Source

NodeB

Source Field

pmSumOfHsScchUsedPwr

Source Section

HsDschResources

pmSumOfHsScchUsedPwr_95

HS-SCCH transmitted power per cell. In case more than one HS-SCCH code is used, the registered value is the sum of each individual value. Number of samples in range 47..47.5dBm

Data Source

NodeB

Source Field

pmSumOfHsScchUsedPwr

Source Section

HsDschResources

pmSumOfHsScchUsedPwr_96

HS-SCCH transmitted power per cell. In case more than one HS-SCCH code is used, the registered value is the sum of each individual value. Number of samples in range 47.5..48dBm

Data Source

NodeB

Source Field

pmSumOfHsScchUsedPwr

Source Section

HsDschResources

pmSumOfHsScchUsedPwr_97

HS-SCCH transmitted power per cell. In case more than one HS-SCCH code is used, the registered value is the sum of each individual value. Number of samples in range 48..48.5dBm

Data Source

NodeB

Source Field

pmSumOfHsScchUsedPwr

Source Section

HsDschResources

pmSumOfHsScchUsedPwr_98

HS-SCCH transmitted power per cell. In case more than one HS-SCCH code is used, the registered value is the sum of each individual value. Number of samples in range 48.5..49dBm

Data Source

NodeB

Source Field

pmSumOfHsScchUsedPwr

Source Section

HsDschResources

pmSumOfHsScchUsedPwr_99

HS-SCCH transmitted power per cell. In case more than one HS-SCCH code is used, the registered value is the sum of each individual value. Number of samples in range 49..49.5dBm

Data Source

NodeB

Source Field

pmSumOfHsScchUsedPwr

Source Section

HsDschResources

pmSumSqrCapacityHsDschUsers

Aggregate of the squares of the sample values (measurement_value) in pmSumCapacityHsDschUsers, that is, pmSumSqrCapacityHsDschUsers = pmSumSqrCapacityHsDschUsers + sqr(measurement_value).

Data Source

NodeB

Source Field

pmSumSqrCapacityHsDschUsers

Source Section

HsDschResources

pmSumSqrCapacityHsPdschCodes

Aggregate of the squares of the sample values (measurement_value) in pmSumCapacityHsPdschCodes, that is, pmSumSqrCapacityHsPdschCodes = pmSumSqrCapacityHsPdschCodes + qr(measurement_value).

Data Source

NodeB

Source Field

pmSumSqrCapacityHsPdschCodes

Source Section

HsDschResources

pmSumTransmittedBits

The number of transmitted kbits at MAC-hs, level including retransmissions

Data Source

NodeB

Source Field

pmSumTransmittedBits

Source Section

HsDschResources

pmSumTransmittedBitsSpi00

Measurements to observe the total amount of data sent on MAC-hs level per scheduling priority class 00-15. Each counter observes a specific SPI. The different flows are configured ON/OFF using RBS MOM parameter IubDataStreams::schHsFlowControlOnOff.

Data Source

NodeB

Source Field

pmSumTransmittedBitsSpi00

Source Section

HsDschResources

pmSumTransmittedBitsSpi01

Measurements to observe the total amount of data sent on MAC-hs level per scheduling priority class 00-15. Each counter observes a specific SPI. The different flows are configured ON/OFF using RBS MOM parameter IubDataStreams::schHsFlowControlOnOff.

Data Source

NodeB

Source Field

pmSumTransmittedBitsSpi01

Source Section

HsDschResources

pmSumTransmittedBitsSpi02

Measurements to observe the total amount of data sent on MAC-hs level per scheduling priority class 00-15. Each counter observes a specific SPI. The different flows are configured ON/OFF using RBS MOM parameter IubDataStreams::schHsFlowControlOnOff.

Data Source

NodeB

Source Field

pmSumTransmittedBitsSpi02

Source Section

HsDschResources

pmSumTransmittedBitsSpi03

Measurements to observe the total amount of data sent on MAC-hs level per scheduling priority class 00-15. Each counter observes a specific SPI. The different flows are configured ON/OFF using RBS MOM parameter IubDataStreams::schHsFlowControlOnOff.

Data Source

NodeB

Source Field

pmSumTransmittedBitsSpi03

Source Section

HsDschResources

pmSumTransmittedBitsSpi04

Measurements to observe the total amount of data sent on MAC-hs level per scheduling priority class 00-15. Each counter observes a specific SPI. The different flows are configured ON/OFF using RBS MOM parameter IubDataStreams::schHsFlowControlOnOff.

Data Source

NodeB

Source Field

pmSumTransmittedBitsSpi04

Source Section

HsDschResources

pmSumTransmittedBitsSpi05

Measurements to observe the total amount of data sent on MAC-hs level per scheduling priority class 00-15. Each counter observes a specific SPI. The different flows are configured ON/OFF using RBS MOM parameter IubDataStreams::schHsFlowControlOnOff.

Data Source

NodeB

Source Field

pmSumTransmittedBitsSpi05

Source Section

HsDschResources

pmSumTransmittedBitsSpi06

Measurements to observe the total amount of data sent on MAC-hs level per scheduling priority class 00-15. Each counter observes a specific SPI. The different flows are configured ON/OFF using RBS MOM parameter IubDataStreams::schHsFlowControlOnOff.

Data Source

NodeB

Source Field

pmSumTransmittedBitsSpi06

Source Section

HsDschResources

pmSumTransmittedBitsSpi07

Measurements to observe the total amount of data sent on MAC-hs level per scheduling priority class 00-15. Each counter observes a specific SPI. The different flows are configured ON/OFF using RBS MOM parameter IubDataStreams::schHsFlowControlOnOff.

Data Source

NodeB

Source Field

pmSumTransmittedBitsSpi07

Source Section

HsDschResources

pmSumTransmittedBitsSpi08

Measurements to observe the total amount of data sent on MAC-hs level per scheduling priority class 00-15. Each counter observes a specific SPI. The different flows are configured ON/OFF using RBS MOM parameter IubDataStreams::schHsFlowControlOnOff.

Data Source

NodeB

Source Field

pmSumTransmittedBitsSpi08

Source Section

HsDschResources

pmSumTransmittedBitsSpi09

Measurements to observe the total amount of data sent on MAC-hs level per scheduling priority class 00-15. Each counter observes a specific SPI. The different flows are configured ON/OFF using RBS MOM parameter IubDataStreams::schHsFlowControlOnOff.

Data Source

NodeB

Source Field

pmSumTransmittedBitsSpi09

Source Section

HsDschResources

pmSumTransmittedBitsSpi10

Measurements to observe the total amount of data sent on MAC-hs level per scheduling priority class 00-15. Each counter observes a specific SPI. The different flows are configured ON/OFF using RBS MOM parameter IubDataStreams::schHsFlowControlOnOff.

Data Source

NodeB

Source Field

pmSumTransmittedBitsSpi10

Source Section

HsDschResources

pmSumTransmittedBitsSpi11

Measurements to observe the total amount of data sent on MAC-hs level per scheduling priority class 00-15. Each counter observes a specific SPI. The different flows are configured ON/OFF using RBS MOM parameter IubDataStreams::schHsFlowControlOnOff.

Data Source

NodeB

Source Field

pmSumTransmittedBitsSpi11

Source Section

HsDschResources

pmSumTransmittedBitsSpi12

Measurements to observe the total amount of data sent on MAC-hs level per scheduling priority class 00-15. Each counter observes a specific SPI. The different flows are configured ON/OFF using RBS MOM parameter IubDataStreams::schHsFlowControlOnOff.

Data Source

NodeB

Source Field

pmSumTransmittedBitsSpi12

Source Section

HsDschResources

pmSumTransmittedBitsSpi13

Measurements to observe the total amount of data sent on MAC-hs level per scheduling priority class 00-15. Each counter observes a specific SPI. The different flows are configured ON/OFF using RBS MOM parameter IubDataStreams::schHsFlowControlOnOff.

Data Source

NodeB

Source Field

pmSumTransmittedBitsSpi13

Source Section

HsDschResources

pmSumTransmittedBitsSpi14

Measurements to observe the total amount of data sent on MAC-hs level per scheduling priority class 00-15. Each counter observes a specific SPI. The different flows are configured ON/OFF using RBS MOM parameter IubDataStreams::schHsFlowControlOnOff.

Data Source

NodeB

Source Field

pmSumTransmittedBitsSpi14

Source Section

HsDschResources

pmSumTransmittedBitsSpi15

Measurements to observe the total amount of data sent on MAC-hs level per scheduling priority class 00-15. Each counter observes a specific SPI. The different flows are configured ON/OFF using RBS MOM parameter IubDataStreams::schHsFlowControlOnOff.

Data Source

NodeB

Source Field

pmSumTransmittedBitsSpi15

Source Section

HsDschResources

pmTransmCarrierPowerNonHsP5MD_00

(Retired on Utran P6)The distribution of transmitted carrier power for all codes not used for High-Speed Physical Downlink Shared Channel (HS-PDSCH) or HS-SCCH transmission in the range < 25 dBm

Data Source

NodeB

Source Field

pmTransmittedCarrierPowerNonHs

Source Section

HsDschResources

pmTransmCarrierPowerNonHsP5MD_51

(Retired on Utran P6)The distribution of transmitted carrier power for all codes not used for High-Speed Physical Downlink Shared Channel (HS-PDSCH) or HS-SCCH transmission in the range > 50 dBm

Data Source

NodeB

Source Field

pmTransmittedCarrierPowerNonHs

Source Section

HsDschResources

pmTransmittedCarrierPowerHs_01

Measurement to observe the distribution of transmitted carrier power for all codes used for transmission of HSDPA channels including HS-PDSCH, HS-SCCH, E-AGCH, E-RGCH and E-HICH.

Data Source

NodeB

Source Field

pmTransmittedCarrierPowerHs

Source Section

HsDschResources

pmTransmittedCarrierPowerHs_02

Measurement to observe the distribution of transmitted carrier power for all codes used for transmission of HSDPA channels including HS-PDSCH, HS-SCCH, E-AGCH, E-RGCH and E-HICH.

Data Source

NodeB

Source Field

pmTransmittedCarrierPowerHs

Source Section

HsDschResources

pmTransmittedCarrierPowerHs_03

Measurement to observe the distribution of transmitted carrier power for all codes used for transmission of HSDPA channels including HS-PDSCH, HS-SCCH, E-AGCH, E-RGCH and E-HICH.

Data Source

NodeB

Source Field

pmTransmittedCarrierPowerHs

Source Section

HsDschResources

pmTransmittedCarrierPowerHs_04

Measurement to observe the distribution of transmitted carrier power for all codes used for transmission of HSDPA channels including HS-PDSCH, HS-SCCH, E-AGCH, E-RGCH and E-HICH.

Data Source

NodeB

Source Field

pmTransmittedCarrierPowerHs

Source Section

HsDschResources

pmTransmittedCarrierPowerHs_05

Measurement to observe the distribution of transmitted carrier power for all codes used for transmission of HSDPA channels including HS-PDSCH, HS-SCCH, E-AGCH, E-RGCH and E-HICH.

Data Source

NodeB

Source Field

pmTransmittedCarrierPowerHs

Source Section

HsDschResources

pmTransmittedCarrierPowerHs_06

Measurement to observe the distribution of transmitted carrier power for all codes used for transmission of HSDPA channels including HS-PDSCH, HS-SCCH, E-AGCH, E-RGCH and E-HICH.

Data Source

NodeB

Source Field

pmTransmittedCarrierPowerHs

Source Section

HsDschResources

pmTransmittedCarrierPowerHs_07

Measurement to observe the distribution of transmitted carrier power for all codes used for transmission of HSDPA channels including HS-PDSCH, HS-SCCH, E-AGCH, E-RGCH and E-HICH.

Data Source

NodeB

Source Field

pmTransmittedCarrierPowerHs

Source Section

HsDschResources

pmTransmittedCarrierPowerHs_08

Measurement to observe the distribution of transmitted carrier power for all codes used for transmission of HSDPA channels including HS-PDSCH, HS-SCCH, E-AGCH, E-RGCH and E-HICH.

Data Source

NodeB

Source Field

pmTransmittedCarrierPowerHs

Source Section

HsDschResources

pmTransmittedCarrierPowerHs_09

Measurement to observe the distribution of transmitted carrier power for all codes used for transmission of HSDPA channels including HS-PDSCH, HS-SCCH, E-AGCH, E-RGCH and E-HICH.

Data Source

NodeB

Source Field

pmTransmittedCarrierPowerHs

Source Section

HsDschResources

pmTransmittedCarrierPowerHs_10

Measurement to observe the distribution of transmitted carrier power for all codes used for transmission of HSDPA channels including HS-PDSCH, HS-SCCH, E-AGCH, E-RGCH and E-HICH.

Data Source

NodeB

Source Field

pmTransmittedCarrierPowerHs

Source Section

HsDschResources

pmTransmittedCarrierPowerHs_11

Measurement to observe the distribution of transmitted carrier power for all codes used for transmission of HSDPA channels including HS-PDSCH, HS-SCCH, E-AGCH, E-RGCH and E-HICH.

Data Source

NodeB

Source Field

pmTransmittedCarrierPowerHs

Source Section

HsDschResources

pmTransmittedCarrierPowerHs_12

Measurement to observe the distribution of transmitted carrier power for all codes used for transmission of HSDPA channels including HS-PDSCH, HS-SCCH, E-AGCH, E-RGCH and E-HICH.

Data Source

NodeB

Source Field

pmTransmittedCarrierPowerHs

Source Section

HsDschResources

pmTransmittedCarrierPowerHs_13

Measurement to observe the distribution of transmitted carrier power for all codes used for transmission of HSDPA channels including HS-PDSCH, HS-SCCH, E-AGCH, E-RGCH and E-HICH.

Data Source

NodeB

Source Field

pmTransmittedCarrierPowerHs

Source Section

HsDschResources

pmTransmittedCarrierPowerHs_14

Measurement to observe the distribution of transmitted carrier power for all codes used for transmission of HSDPA channels including HS-PDSCH, HS-SCCH, E-AGCH, E-RGCH and E-HICH.

Data Source

NodeB

Source Field

pmTransmittedCarrierPowerHs

Source Section

HsDschResources

pmTransmittedCarrierPowerHs_15

Measurement to observe the distribution of transmitted carrier power for all codes used for transmission of HSDPA channels including HS-PDSCH, HS-SCCH, E-AGCH, E-RGCH and E-HICH.

Data Source

NodeB

Source Field

pmTransmittedCarrierPowerHs

Source Section

HsDschResources

pmTransmittedCarrierPowerHs_16

Measurement to observe the distribution of transmitted carrier power for all codes used for transmission of HSDPA channels including HS-PDSCH, HS-SCCH, E-AGCH, E-RGCH and E-HICH.

Data Source

NodeB

Source Field

pmTransmittedCarrierPowerHs

Source Section

HsDschResources

pmTransmittedCarrierPowerHs_17

Measurement to observe the distribution of transmitted carrier power for all codes used for transmission of HSDPA channels including HS-PDSCH, HS-SCCH, E-AGCH, E-RGCH and E-HICH.

Data Source

NodeB

Source Field

pmTransmittedCarrierPowerHs

Source Section

HsDschResources

pmTransmittedCarrierPowerHs_18

Measurement to observe the distribution of transmitted carrier power for all codes used for transmission of HSDPA channels including HS-PDSCH, HS-SCCH, E-AGCH, E-RGCH and E-HICH.

Data Source

NodeB

Source Field

pmTransmittedCarrierPowerHs

Source Section

HsDschResources

pmTransmittedCarrierPowerHs_19

Measurement to observe the distribution of transmitted carrier power for all codes used for transmission of HSDPA channels including HS-PDSCH, HS-SCCH, E-AGCH, E-RGCH and E-HICH.

Data Source

NodeB

Source Field

pmTransmittedCarrierPowerHs

Source Section

HsDschResources

pmTransmittedCarrierPowerHs_20

Measurement to observe the distribution of transmitted carrier power for all codes used for transmission of HSDPA channels including HS-PDSCH, HS-SCCH, E-AGCH, E-RGCH and E-HICH.

Data Source

NodeB

Source Field

pmTransmittedCarrierPowerHs

Source Section

HsDschResources

pmTransmittedCarrierPowerHs_21

Measurement to observe the distribution of transmitted carrier power for all codes used for transmission of HSDPA channels including HS-PDSCH, HS-SCCH, E-AGCH, E-RGCH and E-HICH.

Data Source

NodeB

Source Field

pmTransmittedCarrierPowerHs

Source Section

HsDschResources

pmTransmittedCarrierPowerHs_22

Measurement to observe the distribution of transmitted carrier power for all codes used for transmission of HSDPA channels including HS-PDSCH, HS-SCCH, E-AGCH, E-RGCH and E-HICH.

Data Source

NodeB

Source Field

pmTransmittedCarrierPowerHs

Source Section

HsDschResources

pmTransmittedCarrierPowerHs_23

Measurement to observe the distribution of transmitted carrier power for all codes used for transmission of HSDPA channels including HS-PDSCH, HS-SCCH, E-AGCH, E-RGCH and E-HICH.

Data Source

NodeB

Source Field

pmTransmittedCarrierPowerHs

Source Section

HsDschResources

pmTransmittedCarrierPowerHs_24

Measurement to observe the distribution of transmitted carrier power for all codes used for transmission of HSDPA channels including HS-PDSCH, HS-SCCH, E-AGCH, E-RGCH and E-HICH.

Data Source

NodeB

Source Field

pmTransmittedCarrierPowerHs

Source Section

HsDschResources

pmTransmittedCarrierPowerHs_25

Measurement to observe the distribution of transmitted carrier power for all codes used for transmission of HSDPA channels including HS-PDSCH, HS-SCCH, E-AGCH, E-RGCH and E-HICH.

Data Source

NodeB

Source Field

pmTransmittedCarrierPowerHs

Source Section

HsDschResources

pmTransmittedCarrierPowerHs_26

Measurement to observe the distribution of transmitted carrier power for all codes used for transmission of HSDPA channels including HS-PDSCH, HS-SCCH, E-AGCH, E-RGCH and E-HICH.

Data Source

NodeB

Source Field

pmTransmittedCarrierPowerHs

Source Section

HsDschResources

pmTransmittedCarrierPowerHs_27

Measurement to observe the distribution of transmitted carrier power for all codes used for transmission of HSDPA channels including HS-PDSCH, HS-SCCH, E-AGCH, E-RGCH and E-HICH.

Data Source

NodeB

Source Field

pmTransmittedCarrierPowerHs

Source Section

HsDschResources

pmTransmittedCarrierPowerHs_28

Measurement to observe the distribution of transmitted carrier power for all codes used for transmission of HSDPA channels including HS-PDSCH, HS-SCCH, E-AGCH, E-RGCH and E-HICH.

Data Source

NodeB

Source Field

pmTransmittedCarrierPowerHs

Source Section

HsDschResources

pmTransmittedCarrierPowerHs_29

Measurement to observe the distribution of transmitted carrier power for all codes used for transmission of HSDPA channels including HS-PDSCH, HS-SCCH, E-AGCH, E-RGCH and E-HICH.

Data Source

NodeB

Source Field

pmTransmittedCarrierPowerHs

Source Section

HsDschResources

pmTransmittedCarrierPowerHs_30

Measurement to observe the distribution of transmitted carrier power for all codes used for transmission of HSDPA channels including HS-PDSCH, HS-SCCH, E-AGCH, E-RGCH and E-HICH.

Data Source

NodeB

Source Field

pmTransmittedCarrierPowerHs

Source Section

HsDschResources

pmTransmittedCarrierPowerHs_31

Measurement to observe the distribution of transmitted carrier power for all codes used for transmission of HSDPA channels including HS-PDSCH, HS-SCCH, E-AGCH, E-RGCH and E-HICH.

Data Source

NodeB

Source Field

pmTransmittedCarrierPowerHs

Source Section

HsDschResources

pmTransmittedCarrierPowerHs_32

Measurement to observe the distribution of transmitted carrier power for all codes used for transmission of HSDPA channels including HS-PDSCH, HS-SCCH, E-AGCH, E-RGCH and E-HICH.

Data Source

NodeB

Source Field

pmTransmittedCarrierPowerHs

Source Section

HsDschResources

pmTransmittedCarrierPowerHs_33

Measurement to observe the distribution of transmitted carrier power for all codes used for transmission of HSDPA channels including HS-PDSCH, HS-SCCH, E-AGCH, E-RGCH and E-HICH.

Data Source

NodeB

Source Field

pmTransmittedCarrierPowerHs

Source Section

HsDschResources

pmTransmittedCarrierPowerHs_34

Measurement to observe the distribution of transmitted carrier power for all codes used for transmission of HSDPA channels including HS-PDSCH, HS-SCCH, E-AGCH, E-RGCH and E-HICH.

Data Source

NodeB

Source Field

pmTransmittedCarrierPowerHs

Source Section

HsDschResources

pmTransmittedCarrierPowerHs_35

Measurement to observe the distribution of transmitted carrier power for all codes used for transmission of HSDPA channels including HS-PDSCH, HS-SCCH, E-AGCH, E-RGCH and E-HICH.

Data Source

NodeB

Source Field

pmTransmittedCarrierPowerHs

Source Section

HsDschResources

pmTransmittedCarrierPowerHs_36

Measurement to observe the distribution of transmitted carrier power for all codes used for transmission of HSDPA channels including HS-PDSCH, HS-SCCH, E-AGCH, E-RGCH and E-HICH.

Data Source

NodeB

Source Field

pmTransmittedCarrierPowerHs

Source Section

HsDschResources

pmTransmittedCarrierPowerHs_37

Measurement to observe the distribution of transmitted carrier power for all codes used for transmission of HSDPA channels including HS-PDSCH, HS-SCCH, E-AGCH, E-RGCH and E-HICH.

Data Source

NodeB

Source Field

pmTransmittedCarrierPowerHs

Source Section

HsDschResources

pmTransmittedCarrierPowerHs_38

Measurement to observe the distribution of transmitted carrier power for all codes used for transmission of HSDPA channels including HS-PDSCH, HS-SCCH, E-AGCH, E-RGCH and E-HICH.

Data Source

NodeB

Source Field

pmTransmittedCarrierPowerHs

Source Section

HsDschResources

pmTransmittedCarrierPowerHs_39

Measurement to observe the distribution of transmitted carrier power for all codes used for transmission of HSDPA channels including HS-PDSCH, HS-SCCH, E-AGCH, E-RGCH and E-HICH.

Data Source

NodeB

Source Field

pmTransmittedCarrierPowerHs

Source Section

HsDschResources

pmTransmittedCarrierPowerHs_40

Measurement to observe the distribution of transmitted carrier power for all codes used for transmission of HSDPA channels including HS-PDSCH, HS-SCCH, E-AGCH, E-RGCH and E-HICH.

Data Source

NodeB

Source Field

pmTransmittedCarrierPowerHs

Source Section

HsDschResources

pmTransmittedCarrierPowerHs_41

Measurement to observe the distribution of transmitted carrier power for all codes used for transmission of HSDPA channels including HS-PDSCH, HS-SCCH, E-AGCH, E-RGCH and E-HICH.

Data Source

NodeB

Source Field

pmTransmittedCarrierPowerHs

Source Section

HsDschResources

pmTransmittedCarrierPowerHs_42

Measurement to observe the distribution of transmitted carrier power for all codes used for transmission of HSDPA channels including HS-PDSCH, HS-SCCH, E-AGCH, E-RGCH and E-HICH.

Data Source

NodeB

Source Field

pmTransmittedCarrierPowerHs

Source Section

HsDschResources

pmTransmittedCarrierPowerHs_43

Measurement to observe the distribution of transmitted carrier power for all codes used for transmission of HSDPA channels including HS-PDSCH, HS-SCCH, E-AGCH, E-RGCH and E-HICH.

Data Source

NodeB

Source Field

pmTransmittedCarrierPowerHs

Source Section

HsDschResources

pmTransmittedCarrierPowerHs_44

Measurement to observe the distribution of transmitted carrier power for all codes used for transmission of HSDPA channels including HS-PDSCH, HS-SCCH, E-AGCH, E-RGCH and E-HICH.

Data Source

NodeB

Source Field

pmTransmittedCarrierPowerHs

Source Section

HsDschResources

pmTransmittedCarrierPowerHs_45

Measurement to observe the distribution of transmitted carrier power for all codes used for transmission of HSDPA channels including HS-PDSCH, HS-SCCH, E-AGCH, E-RGCH and E-HICH.

Data Source

NodeB

Source Field

pmTransmittedCarrierPowerHs

Source Section

HsDschResources

pmTransmittedCarrierPowerHs_46

Measurement to observe the distribution of transmitted carrier power for all codes used for transmission of HSDPA channels including HS-PDSCH, HS-SCCH, E-AGCH, E-RGCH and E-HICH.

Data Source

NodeB

Source Field

pmTransmittedCarrierPowerHs

Source Section

HsDschResources

pmTransmittedCarrierPowerHs_47

Measurement to observe the distribution of transmitted carrier power for all codes used for transmission of HSDPA channels including HS-PDSCH, HS-SCCH, E-AGCH, E-RGCH and E-HICH.

Data Source

NodeB

Source Field

pmTransmittedCarrierPowerHs

Source Section

HsDschResources

pmTransmittedCarrierPowerHs_48

Measurement to observe the distribution of transmitted carrier power for all codes used for transmission of HSDPA channels including HS-PDSCH, HS-SCCH, E-AGCH, E-RGCH and E-HICH.

Data Source

NodeB

Source Field

pmTransmittedCarrierPowerHs

Source Section

HsDschResources

pmTransmittedCarrierPowerHs_49

Measurement to observe the distribution of transmitted carrier power for all codes used for transmission of HSDPA channels including HS-PDSCH, HS-SCCH, E-AGCH, E-RGCH and E-HICH.

Data Source

NodeB

Source Field

pmTransmittedCarrierPowerHs

Source Section

HsDschResources

pmTransmittedCarrierPowerHs_50

Measurement to observe the distribution of transmitted carrier power for all codes used for transmission of HSDPA channels including HS-PDSCH, HS-SCCH, E-AGCH, E-RGCH and E-HICH.

Data Source

NodeB

Source Field

pmTransmittedCarrierPowerHs

Source Section

HsDschResources

pmTransmittedCarrierPowerHs_51

Measurement to observe the distribution of transmitted carrier power for all codes used for transmission of HSDPA channels including HS-PDSCH, HS-SCCH, E-AGCH, E-RGCH and E-HICH.

Data Source

NodeB

Source Field

pmTransmittedCarrierPowerHs

Source Section

HsDschResources

pmTransmittedCarrierPowerHs_52

Measurement to observe the distribution of transmitted carrier power for all codes used for transmission of HSDPA channels including HS-PDSCH, HS-SCCH, E-AGCH, E-RGCH and E-HICH.

Data Source

NodeB

Source Field

pmTransmittedCarrierPowerHs

Source Section

HsDschResources

pmTransmittedCarrierPowerNonHs_000

(Retired on Utran P6)The distribution of transmitted carrier power for all codes not used for High-Speed Physical Downlink Shared Channel (HS-PDSCH) or HS-SCCH transmission in the range less than 0 dBm

Data Source

NodeB

Source Field

pmTransmittedCarrierPowerNonHs

Source Section

HsDschResources

pmTransmittedCarrierPowerNonHs_001

(Retired on Utran P6)The distribution of transmitted carrier power for all codes not used for High-Speed Physical Downlink Shared Channel (HS-PDSCH) or HS-SCCH transmission in the range 0.0 - 0.5 dBm

Data Source

NodeB

Source Field

pmTransmittedCarrierPowerNonHs

Source Section

HsDschResources

pmTransmittedCarrierPowerNonHs_002

(Retired on Utran P6)The distribution of transmitted carrier power for all codes not used for High-Speed Physical Downlink Shared Channel (HS-PDSCH) or HS-SCCH transmission in the range 0.5 - 1.0 dBm

Data Source

NodeB

Source Field

pmTransmittedCarrierPowerNonHs

Source Section

HsDschResources

pmTransmittedCarrierPowerNonHs_003

(Retired on Utran P6)The distribution of transmitted carrier power for all codes not used for High-Speed Physical Downlink Shared Channel (HS-PDSCH) or HS-SCCH transmission in the range 1.0 - 1.5 dBm

Data Source

NodeB

Source Field

pmTransmittedCarrierPowerNonHs

Source Section

HsDschResources

pmTransmittedCarrierPowerNonHs_004

(Retired on Utran P6)The distribution of transmitted carrier power for all codes not used for High-Speed Physical Downlink Shared Channel (HS-PDSCH) or HS-SCCH transmission in the range 1.5 - 2.0 dBm

Data Source

NodeB

Source Field

pmTransmittedCarrierPowerNonHs

Source Section

HsDschResources

pmTransmittedCarrierPowerNonHs_005

(Retired on Utran P6)The distribution of transmitted carrier power for all codes not used for High-Speed Physical Downlink Shared Channel (HS-PDSCH) or HS-SCCH transmission in the range 2.0 - 2.5 dBm

Data Source

NodeB

Source Field

pmTransmittedCarrierPowerNonHs

Source Section

HsDschResources

pmTransmittedCarrierPowerNonHs_006

(Retired on Utran P6)The distribution of transmitted carrier power for all codes not used for High-Speed Physical Downlink Shared Channel (HS-PDSCH) or HS-SCCH transmission in the range 2.5 - 3.0 dBm

Data Source

NodeB

Source Field

pmTransmittedCarrierPowerNonHs

Source Section

HsDschResources

pmTransmittedCarrierPowerNonHs_007

(Retired on Utran P6)The distribution of transmitted carrier power for all codes not used for High-Speed Physical Downlink Shared Channel (HS-PDSCH) or HS-SCCH transmission in the range 3.0 - 3.5 dBm

Data Source

NodeB

Source Field

pmTransmittedCarrierPowerNonHs

Source Section

HsDschResources

pmTransmittedCarrierPowerNonHs_008

(Retired on Utran P6)The distribution of transmitted carrier power for all codes not used for High-Speed Physical Downlink Shared Channel (HS-PDSCH) or HS-SCCH transmission in the range 3.5 - 4.0 dBm

Data Source

NodeB

Source Field

pmTransmittedCarrierPowerNonHs

Source Section

HsDschResources

pmTransmittedCarrierPowerNonHs_009

(Retired on Utran P6)The distribution of transmitted carrier power for all codes not used for High-Speed Physical Downlink Shared Channel (HS-PDSCH) or HS-SCCH transmission in the range 4.0 - 4.5 dBm

Data Source

NodeB

Source Field

pmTransmittedCarrierPowerNonHs

Source Section

HsDschResources

pmTransmittedCarrierPowerNonHs_010

(Retired on Utran P6)The distribution of transmitted carrier power for all codes not used for High-Speed Physical Downlink Shared Channel (HS-PDSCH) or HS-SCCH transmission in the range 4.5 - 5.0 dBm

Data Source

NodeB

Source Field

pmTransmittedCarrierPowerNonHs

Source Section

HsDschResources

pmTransmittedCarrierPowerNonHs_011

(Retired on Utran P6)The distribution of transmitted carrier power for all codes not used for High-Speed Physical Downlink Shared Channel (HS-PDSCH) or HS-SCCH transmission in the range 5.0 - 5.5 dBm

Data Source

NodeB

Source Field

pmTransmittedCarrierPowerNonHs

Source Section

HsDschResources

pmTransmittedCarrierPowerNonHs_012

(Retired on Utran P6)The distribution of transmitted carrier power for all codes not used for High-Speed Physical Downlink Shared Channel (HS-PDSCH) or HS-SCCH transmission in the range 5.5 - 6.0 dBm

Data Source

NodeB

Source Field

pmTransmittedCarrierPowerNonHs

Source Section

HsDschResources

pmTransmittedCarrierPowerNonHs_013

(Retired on Utran P6)The distribution of transmitted carrier power for all codes not used for High-Speed Physical Downlink Shared Channel (HS-PDSCH) or HS-SCCH transmission in the range 6.0 - 6.5 dBm

Data Source

NodeB

Source Field

pmTransmittedCarrierPowerNonHs

Source Section

HsDschResources

pmTransmittedCarrierPowerNonHs_014

(Retired on Utran P6)The distribution of transmitted carrier power for all codes not used for High-Speed Physical Downlink Shared Channel (HS-PDSCH) or HS-SCCH transmission in the range 6.5 - 7.0 dBm

Data Source

NodeB

Source Field

pmTransmittedCarrierPowerNonHs

Source Section

HsDschResources

pmTransmittedCarrierPowerNonHs_015

(Retired on Utran P6)The distribution of transmitted carrier power for all codes not used for High-Speed Physical Downlink Shared Channel (HS-PDSCH) or HS-SCCH transmission in the range 7.0 - 7.5 dBm

Data Source

NodeB

Source Field

pmTransmittedCarrierPowerNonHs

Source Section

HsDschResources

pmTransmittedCarrierPowerNonHs_016

(Retired on Utran P6)The distribution of transmitted carrier power for all codes not used for High-Speed Physical Downlink Shared Channel (HS-PDSCH) or HS-SCCH transmission in the range 7.5 - 8.0 dBm

Data Source

NodeB

Source Field

pmTransmittedCarrierPowerNonHs

Source Section

HsDschResources

pmTransmittedCarrierPowerNonHs_017

(Retired on Utran P6)The distribution of transmitted carrier power for all codes not used for High-Speed Physical Downlink Shared Channel (HS-PDSCH) or HS-SCCH transmission in the range 8.0 - 8.5 dBm

Data Source

NodeB

Source Field

pmTransmittedCarrierPowerNonHs

Source Section

HsDschResources

pmTransmittedCarrierPowerNonHs_018

(Retired on Utran P6)The distribution of transmitted carrier power for all codes not used for High-Speed Physical Downlink Shared Channel (HS-PDSCH) or HS-SCCH transmission in the range 8.5 - 9.0 dBm

Data Source

NodeB

Source Field

pmTransmittedCarrierPowerNonHs

Source Section

HsDschResources

pmTransmittedCarrierPowerNonHs_019

(Retired on Utran P6)The distribution of transmitted carrier power for all codes not used for High-Speed Physical Downlink Shared Channel (HS-PDSCH) or HS-SCCH transmission in the range 9.0 - 9.5 dBm

Data Source

NodeB

Source Field

pmTransmittedCarrierPowerNonHs

Source Section

HsDschResources

pmTransmittedCarrierPowerNonHs_020

(Retired on Utran P6)The distribution of transmitted carrier power for all codes not used for High-Speed Physical Downlink Shared Channel (HS-PDSCH) or HS-SCCH transmission in the range 9.5 - 10.0 dBm

Data Source

NodeB

Source Field

pmTransmittedCarrierPowerNonHs

Source Section

HsDschResources

pmTransmittedCarrierPowerNonHs_021

(Retired on Utran P6)The distribution of transmitted carrier power for all codes not used for High-Speed Physical Downlink Shared Channel (HS-PDSCH) or HS-SCCH transmission in the range 10.0 - 10.5 dBm

Data Source

NodeB

Source Field

pmTransmittedCarrierPowerNonHs

Source Section

HsDschResources

pmTransmittedCarrierPowerNonHs_022

(Retired on Utran P6)The distribution of transmitted carrier power for all codes not used for High-Speed Physical Downlink Shared Channel (HS-PDSCH) or HS-SCCH transmission in the range 10.5 - 11.0 dBm

Data Source

NodeB

Source Field

pmTransmittedCarrierPowerNonHs

Source Section

HsDschResources

pmTransmittedCarrierPowerNonHs_023

(Retired on Utran P6)The distribution of transmitted carrier power for all codes not used for High-Speed Physical Downlink Shared Channel (HS-PDSCH) or HS-SCCH transmission in the range 11.0 - 11.5 dBm

Data Source

NodeB

Source Field

pmTransmittedCarrierPowerNonHs

Source Section

HsDschResources

pmTransmittedCarrierPowerNonHs_024

(Retired on Utran P6)The distribution of transmitted carrier power for all codes not used for High-Speed Physical Downlink Shared Channel (HS-PDSCH) or HS-SCCH transmission in the range 11.5 - 12.0 dBm

Data Source

NodeB

Source Field

pmTransmittedCarrierPowerNonHs

Source Section

HsDschResources

pmTransmittedCarrierPowerNonHs_025

(Retired on Utran P6)The distribution of transmitted carrier power for all codes not used for High-Speed Physical Downlink Shared Channel (HS-PDSCH) or HS-SCCH transmission in the range 12.0 - 12.5 dBm

Data Source

NodeB

Source Field

pmTransmittedCarrierPowerNonHs

Source Section

HsDschResources

pmTransmittedCarrierPowerNonHs_026

(Retired on Utran P6)The distribution of transmitted carrier power for all codes not used for High-Speed Physical Downlink Shared Channel (HS-PDSCH) or HS-SCCH transmission in the range 12.5 - 13.0 dBm

Data Source

NodeB

Source Field

pmTransmittedCarrierPowerNonHs

Source Section

HsDschResources

pmTransmittedCarrierPowerNonHs_027

(Retired on Utran P6)The distribution of transmitted carrier power for all codes not used for High-Speed Physical Downlink Shared Channel (HS-PDSCH) or HS-SCCH transmission in the range 13.0 - 13.5 dBm

Data Source

NodeB

Source Field

pmTransmittedCarrierPowerNonHs

Source Section

HsDschResources

pmTransmittedCarrierPowerNonHs_028

(Retired on Utran P6)The distribution of transmitted carrier power for all codes not used for High-Speed Physical Downlink Shared Channel (HS-PDSCH) or HS-SCCH transmission in the range 13.5 - 14.0 dBm

Data Source

NodeB

Source Field

pmTransmittedCarrierPowerNonHs

Source Section

HsDschResources

pmTransmittedCarrierPowerNonHs_029

(Retired on Utran P6)The distribution of transmitted carrier power for all codes not used for High-Speed Physical Downlink Shared Channel (HS-PDSCH) or HS-SCCH transmission in the range 14.0 - 14.5 dBm

Data Source

NodeB

Source Field

pmTransmittedCarrierPowerNonHs

Source Section

HsDschResources

pmTransmittedCarrierPowerNonHs_030

(Retired on Utran P6)The distribution of transmitted carrier power for all codes not used for High-Speed Physical Downlink Shared Channel (HS-PDSCH) or HS-SCCH transmission in the range 14.5 - 15.0 dBm

Data Source

NodeB

Source Field

pmTransmittedCarrierPowerNonHs

Source Section

HsDschResources

pmTransmittedCarrierPowerNonHs_031

(Retired on Utran P6)The distribution of transmitted carrier power for all codes not used for High-Speed Physical Downlink Shared Channel (HS-PDSCH) or HS-SCCH transmission in the range 15.0 - 15.5 dBm

Data Source

NodeB

Source Field

pmTransmittedCarrierPowerNonHs

Source Section

HsDschResources

pmTransmittedCarrierPowerNonHs_032

(Retired on Utran P6)The distribution of transmitted carrier power for all codes not used for High-Speed Physical Downlink Shared Channel (HS-PDSCH) or HS-SCCH transmission in the range 15.5 - 16.0 dBm

Data Source

NodeB

Source Field

pmTransmittedCarrierPowerNonHs

Source Section

HsDschResources

pmTransmittedCarrierPowerNonHs_033

(Retired on Utran P6)The distribution of transmitted carrier power for all codes not used for High-Speed Physical Downlink Shared Channel (HS-PDSCH) or HS-SCCH transmission in the range 16.0 - 16.5 dBm

Data Source

NodeB

Source Field

pmTransmittedCarrierPowerNonHs

Source Section

HsDschResources

pmTransmittedCarrierPowerNonHs_034

(Retired on Utran P6)The distribution of transmitted carrier power for all codes not used for High-Speed Physical Downlink Shared Channel (HS-PDSCH) or HS-SCCH transmission in the range 16.5 - 17.0 dBm

Data Source

NodeB

Source Field

pmTransmittedCarrierPowerNonHs

Source Section

HsDschResources

pmTransmittedCarrierPowerNonHs_035

(Retired on Utran P6)The distribution of transmitted carrier power for all codes not used for High-Speed Physical Downlink Shared Channel (HS-PDSCH) or HS-SCCH transmission in the range 17.0 - 17.5 dBm

Data Source

NodeB

Source Field

pmTransmittedCarrierPowerNonHs

Source Section

HsDschResources

pmTransmittedCarrierPowerNonHs_036

(Retired on Utran P6)The distribution of transmitted carrier power for all codes not used for High-Speed Physical Downlink Shared Channel (HS-PDSCH) or HS-SCCH transmission in the range 17.5 - 18.0 dBm

Data Source

NodeB

Source Field

pmTransmittedCarrierPowerNonHs

Source Section

HsDschResources

pmTransmittedCarrierPowerNonHs_037

(Retired on Utran P6)The distribution of transmitted carrier power for all codes not used for High-Speed Physical Downlink Shared Channel (HS-PDSCH) or HS-SCCH transmission in the range 18.0 - 18.5 dBm

Data Source

NodeB

Source Field

pmTransmittedCarrierPowerNonHs

Source Section

HsDschResources

pmTransmittedCarrierPowerNonHs_038

(Retired on Utran P6)The distribution of transmitted carrier power for all codes not used for High-Speed Physical Downlink Shared Channel (HS-PDSCH) or HS-SCCH transmission in the range 18.5 - 19.0 dBm

Data Source

NodeB

Source Field

pmTransmittedCarrierPowerNonHs

Source Section

HsDschResources

pmTransmittedCarrierPowerNonHs_039

(Retired on Utran P6)The distribution of transmitted carrier power for all codes not used for High-Speed Physical Downlink Shared Channel (HS-PDSCH) or HS-SCCH transmission in the range 19.0 - 19.5 dBm

Data Source

NodeB

Source Field

pmTransmittedCarrierPowerNonHs

Source Section

HsDschResources

pmTransmittedCarrierPowerNonHs_040

(Retired on Utran P6)The distribution of transmitted carrier power for all codes not used for High-Speed Physical Downlink Shared Channel (HS-PDSCH) or HS-SCCH transmission in the range 19.5 - 20.0 dBm

Data Source

NodeB

Source Field

pmTransmittedCarrierPowerNonHs

Source Section

HsDschResources

pmTransmittedCarrierPowerNonHs_041

(Retired on Utran P6)The distribution of transmitted carrier power for all codes not used for High-Speed Physical Downlink Shared Channel (HS-PDSCH) or HS-SCCH transmission in the range 20.0 - 20.5 dBm

Data Source

NodeB

Source Field

pmTransmittedCarrierPowerNonHs

Source Section

HsDschResources

pmTransmittedCarrierPowerNonHs_042

(Retired on Utran P6)The distribution of transmitted carrier power for all codes not used for High-Speed Physical Downlink Shared Channel (HS-PDSCH) or HS-SCCH transmission in the range 20.5 - 21.0 dBm

Data Source

NodeB

Source Field

pmTransmittedCarrierPowerNonHs

Source Section

HsDschResources

pmTransmittedCarrierPowerNonHs_043

(Retired on Utran P6)The distribution of transmitted carrier power for all codes not used for High-Speed Physical Downlink Shared Channel (HS-PDSCH) or HS-SCCH transmission in the range 21.0 - 21.5 dBm

Data Source

NodeB

Source Field

pmTransmittedCarrierPowerNonHs

Source Section

HsDschResources

pmTransmittedCarrierPowerNonHs_044

(Retired on Utran P6)The distribution of transmitted carrier power for all codes not used for High-Speed Physical Downlink Shared Channel (HS-PDSCH) or HS-SCCH transmission in the range 21.5 - 22.0 dBm

Data Source

NodeB

Source Field

pmTransmittedCarrierPowerNonHs

Source Section

HsDschResources

pmTransmittedCarrierPowerNonHs_045

(Retired on Utran P6)The distribution of transmitted carrier power for all codes not used for High-Speed Physical Downlink Shared Channel (HS-PDSCH) or HS-SCCH transmission in the range 22.0 - 22.5 dBm

Data Source

NodeB

Source Field

pmTransmittedCarrierPowerNonHs

Source Section

HsDschResources

pmTransmittedCarrierPowerNonHs_046

(Retired on Utran P6)The distribution of transmitted carrier power for all codes not used for High-Speed Physical Downlink Shared Channel (HS-PDSCH) or HS-SCCH transmission in the range 22.5 - 23.0 dBm

Data Source

NodeB

Source Field

pmTransmittedCarrierPowerNonHs

Source Section

HsDschResources

pmTransmittedCarrierPowerNonHs_047

(Retired on Utran P6)The distribution of transmitted carrier power for all codes not used for High-Speed Physical Downlink Shared Channel (HS-PDSCH) or HS-SCCH transmission in the range 23.0 - 23.5 dBm

Data Source

NodeB

Source Field

pmTransmittedCarrierPowerNonHs

Source Section

HsDschResources

pmTransmittedCarrierPowerNonHs_048

(Retired on Utran P6)The distribution of transmitted carrier power for all codes not used for High-Speed Physical Downlink Shared Channel (HS-PDSCH) or HS-SCCH transmission in the range 23.5 - 24.0 dBm

Data Source

NodeB

Source Field

pmTransmittedCarrierPowerNonHs

Source Section

HsDschResources

pmTransmittedCarrierPowerNonHs_049

(Retired on Utran P6)The distribution of transmitted carrier power for all codes not used for High-Speed Physical Downlink Shared Channel (HS-PDSCH) or HS-SCCH transmission in the range 24.0 - 24.5 dBm

Data Source

NodeB

Source Field

pmTransmittedCarrierPowerNonHs

Source Section

HsDschResources

pmTransmittedCarrierPowerNonHs_050

(Retired on Utran P6)The distribution of transmitted carrier power for all codes not used for High-Speed Physical Downlink Shared Channel (HS-PDSCH) or HS-SCCH transmission in the range 24.5 - 25.0 dBm

Data Source

NodeB

Source Field

pmTransmittedCarrierPowerNonHs

Source Section

HsDschResources

pmTransmittedCarrierPowerNonHs_051

(Retired on Utran P6)The distribution of transmitted carrier power for all codes not used for High-Speed Physical Downlink Shared Channel (HS-PDSCH) or HS-SCCH transmission in the range 25.0 - 25.5 dBm

Data Source

NodeB

Source Field

pmTransmittedCarrierPowerNonHs

Source Section

HsDschResources

pmTransmittedCarrierPowerNonHs_052

(Retired on Utran P6)The distribution of transmitted carrier power for all codes not used for High-Speed Physical Downlink Shared Channel (HS-PDSCH) or HS-SCCH transmission in the range 25.5 - 26.0 dBm

Data Source

NodeB

Source Field

pmTransmittedCarrierPowerNonHs

Source Section

HsDschResources

pmTransmittedCarrierPowerNonHs_053

(Retired on Utran P6)The distribution of transmitted carrier power for all codes not used for High-Speed Physical Downlink Shared Channel (HS-PDSCH) or HS-SCCH transmission in the range 26.0 - 26.5 dBm

Data Source

NodeB

Source Field

pmTransmittedCarrierPowerNonHs

Source Section

HsDschResources

pmTransmittedCarrierPowerNonHs_054

(Retired on Utran P6)The distribution of transmitted carrier power for all codes not used for High-Speed Physical Downlink Shared Channel (HS-PDSCH) or HS-SCCH transmission in the range 26.5 - 27.0 dBm

Data Source

NodeB

Source Field

pmTransmittedCarrierPowerNonHs

Source Section

HsDschResources

pmTransmittedCarrierPowerNonHs_055

(Retired on Utran P6)The distribution of transmitted carrier power for all codes not used for High-Speed Physical Downlink Shared Channel (HS-PDSCH) or HS-SCCH transmission in the range 27.0 - 27.5 dBm

Data Source

NodeB

Source Field

pmTransmittedCarrierPowerNonHs

Source Section

HsDschResources

pmTransmittedCarrierPowerNonHs_056

(Retired on Utran P6)The distribution of transmitted carrier power for all codes not used for High-Speed Physical Downlink Shared Channel (HS-PDSCH) or HS-SCCH transmission in the range 27.5 - 28.0 dBm

Data Source

NodeB

Source Field

pmTransmittedCarrierPowerNonHs

Source Section

HsDschResources

pmTransmittedCarrierPowerNonHs_057

(Retired on Utran P6)The distribution of transmitted carrier power for all codes not used for High-Speed Physical Downlink Shared Channel (HS-PDSCH) or HS-SCCH transmission in the range 28.0 - 28.5 dBm

Data Source

NodeB

Source Field

pmTransmittedCarrierPowerNonHs

Source Section

HsDschResources

pmTransmittedCarrierPowerNonHs_058

(Retired on Utran P6)The distribution of transmitted carrier power for all codes not used for High-Speed Physical Downlink Shared Channel (HS-PDSCH) or HS-SCCH transmission in the range 28.5 - 29.0 dBm

Data Source

NodeB

Source Field

pmTransmittedCarrierPowerNonHs

Source Section

HsDschResources

pmTransmittedCarrierPowerNonHs_059

(Retired on Utran P6)The distribution of transmitted carrier power for all codes not used for High-Speed Physical Downlink Shared Channel (HS-PDSCH) or HS-SCCH transmission in the range 29.0 - 29.5 dBm

Data Source

NodeB

Source Field

pmTransmittedCarrierPowerNonHs

Source Section

HsDschResources

pmTransmittedCarrierPowerNonHs_060

(Retired on Utran P6)The distribution of transmitted carrier power for all codes not used for High-Speed Physical Downlink Shared Channel (HS-PDSCH) or HS-SCCH transmission in the range 29.5 - 30.0 dBm

Data Source

NodeB

Source Field

pmTransmittedCarrierPowerNonHs

Source Section

HsDschResources

pmTransmittedCarrierPowerNonHs_061

(Retired on Utran P6)The distribution of transmitted carrier power for all codes not used for High-Speed Physical Downlink Shared Channel (HS-PDSCH) or HS-SCCH transmission in the range 30.0 - 30.5 dBm

Data Source

NodeB

Source Field

pmTransmittedCarrierPowerNonHs

Source Section

HsDschResources

pmTransmittedCarrierPowerNonHs_062

(Retired on Utran P6)The distribution of transmitted carrier power for all codes not used for High-Speed Physical Downlink Shared Channel (HS-PDSCH) or HS-SCCH transmission in the range 30.5 - 31.0 dBm

Data Source

NodeB

Source Field

pmTransmittedCarrierPowerNonHs

Source Section

HsDschResources

pmTransmittedCarrierPowerNonHs_063

(Retired on Utran P6)The distribution of transmitted carrier power for all codes not used for High-Speed Physical Downlink Shared Channel (HS-PDSCH) or HS-SCCH transmission in the range 31.0 - 31.5 dBm

Data Source

NodeB

Source Field

pmTransmittedCarrierPowerNonHs

Source Section

HsDschResources

pmTransmittedCarrierPowerNonHs_064

(Retired on Utran P6)The distribution of transmitted carrier power for all codes not used for High-Speed Physical Downlink Shared Channel (HS-PDSCH) or HS-SCCH transmission in the range 31.5 - 32.0 dBm

Data Source

NodeB

Source Field

pmTransmittedCarrierPowerNonHs

Source Section

HsDschResources

pmTransmittedCarrierPowerNonHs_065

(Retired on Utran P6)The distribution of transmitted carrier power for all codes not used for High-Speed Physical Downlink Shared Channel (HS-PDSCH) or HS-SCCH transmission in the range 32.0 - 32.5 dBm

Data Source

NodeB

Source Field

pmTransmittedCarrierPowerNonHs

Source Section

HsDschResources

pmTransmittedCarrierPowerNonHs_066

(Retired on Utran P6)The distribution of transmitted carrier power for all codes not used for High-Speed Physical Downlink Shared Channel (HS-PDSCH) or HS-SCCH transmission in the range 32.5 - 33.0 dBm

Data Source

NodeB

Source Field

pmTransmittedCarrierPowerNonHs

Source Section

HsDschResources

pmTransmittedCarrierPowerNonHs_067

(Retired on Utran P6)The distribution of transmitted carrier power for all codes not used for High-Speed Physical Downlink Shared Channel (HS-PDSCH) or HS-SCCH transmission in the range 33.0 - 33.5 dBm

Data Source

NodeB

Source Field

pmTransmittedCarrierPowerNonHs

Source Section

HsDschResources

pmTransmittedCarrierPowerNonHs_068

(Retired on Utran P6)The distribution of transmitted carrier power for all codes not used for High-Speed Physical Downlink Shared Channel (HS-PDSCH) or HS-SCCH transmission in the range 33.5 - 34.0 dBm

Data Source

NodeB

Source Field

pmTransmittedCarrierPowerNonHs

Source Section

HsDschResources

pmTransmittedCarrierPowerNonHs_069

(Retired on Utran P6)The distribution of transmitted carrier power for all codes not used for High-Speed Physical Downlink Shared Channel (HS-PDSCH) or HS-SCCH transmission in the range 34.0 - 34.5 dBm

Data Source

NodeB

Source Field

pmTransmittedCarrierPowerNonHs

Source Section

HsDschResources

pmTransmittedCarrierPowerNonHs_070

(Retired on Utran P6)The distribution of transmitted carrier power for all codes not used for High-Speed Physical Downlink Shared Channel (HS-PDSCH) or HS-SCCH transmission in the range 34.5 - 35.0 dBm

Data Source

NodeB

Source Field

pmTransmittedCarrierPowerNonHs

Source Section

HsDschResources

pmTransmittedCarrierPowerNonHs_071

(Retired on Utran P6)The distribution of transmitted carrier power for all codes not used for High-Speed Physical Downlink Shared Channel (HS-PDSCH) or HS-SCCH transmission in the range 35.0 - 35.5 dBm

Data Source

NodeB

Source Field

pmTransmittedCarrierPowerNonHs

Source Section

HsDschResources

pmTransmittedCarrierPowerNonHs_072

(Retired on Utran P6)The distribution of transmitted carrier power for all codes not used for High-Speed Physical Downlink Shared Channel (HS-PDSCH) or HS-SCCH transmission in the range 35.5 - 36.0 dBm

Data Source

NodeB

Source Field

pmTransmittedCarrierPowerNonHs

Source Section

HsDschResources

pmTransmittedCarrierPowerNonHs_073

(Retired on Utran P6)The distribution of transmitted carrier power for all codes not used for High-Speed Physical Downlink Shared Channel (HS-PDSCH) or HS-SCCH transmission in the range 36.0 - 36.5 dBm

Data Source

NodeB

Source Field

pmTransmittedCarrierPowerNonHs

Source Section

HsDschResources

pmTransmittedCarrierPowerNonHs_074

(Retired on Utran P6)The distribution of transmitted carrier power for all codes not used for High-Speed Physical Downlink Shared Channel (HS-PDSCH) or HS-SCCH transmission in the range 36.5 - 37.0 dBm

Data Source

NodeB

Source Field

pmTransmittedCarrierPowerNonHs

Source Section

HsDschResources

pmTransmittedCarrierPowerNonHs_075

(Retired on Utran P6)The distribution of transmitted carrier power for all codes not used for High-Speed Physical Downlink Shared Channel (HS-PDSCH) or HS-SCCH transmission in the range 37.0 - 37.5 dBm

Data Source

NodeB

Source Field

pmTransmittedCarrierPowerNonHs

Source Section

HsDschResources

pmTransmittedCarrierPowerNonHs_076

(Retired on Utran P6)The distribution of transmitted carrier power for all codes not used for High-Speed Physical Downlink Shared Channel (HS-PDSCH) or HS-SCCH transmission in the range 37.5 - 38.0 dBm

Data Source

NodeB

Source Field

pmTransmittedCarrierPowerNonHs

Source Section

HsDschResources

pmTransmittedCarrierPowerNonHs_077

(Retired on Utran P6)The distribution of transmitted carrier power for all codes not used for High-Speed Physical Downlink Shared Channel (HS-PDSCH) or HS-SCCH transmission in the range 38.0 - 38.5 dBm

Data Source

NodeB

Source Field

pmTransmittedCarrierPowerNonHs

Source Section

HsDschResources

pmTransmittedCarrierPowerNonHs_078

(Retired on Utran P6)The distribution of transmitted carrier power for all codes not used for High-Speed Physical Downlink Shared Channel (HS-PDSCH) or HS-SCCH transmission in the range 38.5 - 39.0 dBm

Data Source

NodeB

Source Field

pmTransmittedCarrierPowerNonHs

Source Section

HsDschResources

pmTransmittedCarrierPowerNonHs_079

(Retired on Utran P6)The distribution of transmitted carrier power for all codes not used for High-Speed Physical Downlink Shared Channel (HS-PDSCH) or HS-SCCH transmission in the range 39.0 - 39.5 dBm

Data Source

NodeB

Source Field

pmTransmittedCarrierPowerNonHs

Source Section

HsDschResources

pmTransmittedCarrierPowerNonHs_080

(Retired on Utran P6)The distribution of transmitted carrier power for all codes not used for High-Speed Physical Downlink Shared Channel (HS-PDSCH) or HS-SCCH transmission in the range 39.5 - 40.0 dBm

Data Source

NodeB

Source Field

pmTransmittedCarrierPowerNonHs

Source Section

HsDschResources

pmTransmittedCarrierPowerNonHs_081

(Retired on Utran P6)The distribution of transmitted carrier power for all codes not used for High-Speed Physical Downlink Shared Channel (HS-PDSCH) or HS-SCCH transmission in the range 40.0 - 40.5 dBm

Data Source

NodeB

Source Field

pmTransmittedCarrierPowerNonHs

Source Section

HsDschResources

pmTransmittedCarrierPowerNonHs_082

(Retired on Utran P6)The distribution of transmitted carrier power for all codes not used for High-Speed Physical Downlink Shared Channel (HS-PDSCH) or HS-SCCH transmission in the range 40.5 - 41.0 dBm

Data Source

NodeB

Source Field

pmTransmittedCarrierPowerNonHs

Source Section

HsDschResources

pmTransmittedCarrierPowerNonHs_083

(Retired on Utran P6)The distribution of transmitted carrier power for all codes not used for High-Speed Physical Downlink Shared Channel (HS-PDSCH) or HS-SCCH transmission in the range 41.0 - 41.5 dBm

Data Source

NodeB

Source Field

pmTransmittedCarrierPowerNonHs

Source Section

HsDschResources

pmTransmittedCarrierPowerNonHs_084

(Retired on Utran P6)The distribution of transmitted carrier power for all codes not used for High-Speed Physical Downlink Shared Channel (HS-PDSCH) or HS-SCCH transmission in the range 41.5 - 42.0 dBm

Data Source

NodeB

Source Field

pmTransmittedCarrierPowerNonHs

Source Section

HsDschResources

pmTransmittedCarrierPowerNonHs_085

(Retired on Utran P6)The distribution of transmitted carrier power for all codes not used for High-Speed Physical Downlink Shared Channel (HS-PDSCH) or HS-SCCH transmission in the range 42.0 - 42.5 dBm

Data Source

NodeB

Source Field

pmTransmittedCarrierPowerNonHs

Source Section

HsDschResources

pmTransmittedCarrierPowerNonHs_086

(Retired on Utran P6)The distribution of transmitted carrier power for all codes not used for High-Speed Physical Downlink Shared Channel (HS-PDSCH) or HS-SCCH transmission in the range 42.5 - 43.0 dBm

Data Source

NodeB

Source Field

pmTransmittedCarrierPowerNonHs

Source Section

HsDschResources

pmTransmittedCarrierPowerNonHs_087

(Retired on Utran P6)The distribution of transmitted carrier power for all codes not used for High-Speed Physical Downlink Shared Channel (HS-PDSCH) or HS-SCCH transmission in the range 43.0 - 43.5 dBm

Data Source

NodeB

Source Field

pmTransmittedCarrierPowerNonHs

Source Section

HsDschResources

pmTransmittedCarrierPowerNonHs_088

(Retired on Utran P6)The distribution of transmitted carrier power for all codes not used for High-Speed Physical Downlink Shared Channel (HS-PDSCH) or HS-SCCH transmission in the range 43.5 - 44.0 dBm

Data Source

NodeB

Source Field

pmTransmittedCarrierPowerNonHs

Source Section

HsDschResources

pmTransmittedCarrierPowerNonHs_089

(Retired on Utran P6)The distribution of transmitted carrier power for all codes not used for High-Speed Physical Downlink Shared Channel (HS-PDSCH) or HS-SCCH transmission in the range 44.0 - 44.5 dBm

Data Source

NodeB

Source Field

pmTransmittedCarrierPowerNonHs

Source Section

HsDschResources

pmTransmittedCarrierPowerNonHs_090

(Retired on Utran P6)The distribution of transmitted carrier power for all codes not used for High-Speed Physical Downlink Shared Channel (HS-PDSCH) or HS-SCCH transmission in the range 44.5 - 45.0 dBm

Data Source

NodeB

Source Field

pmTransmittedCarrierPowerNonHs

Source Section

HsDschResources

pmTransmittedCarrierPowerNonHs_091

(Retired on Utran P6)The distribution of transmitted carrier power for all codes not used for High-Speed Physical Downlink Shared Channel (HS-PDSCH) or HS-SCCH transmission in the range 45.0 - 45.5 dBm

Data Source

NodeB

Source Field

pmTransmittedCarrierPowerNonHs

Source Section

HsDschResources

pmTransmittedCarrierPowerNonHs_092

(Retired on Utran P6)The distribution of transmitted carrier power for all codes not used for High-Speed Physical Downlink Shared Channel (HS-PDSCH) or HS-SCCH transmission in the range 45.5 - 46.0 dBm

Data Source

NodeB

Source Field

pmTransmittedCarrierPowerNonHs

Source Section

HsDschResources

pmTransmittedCarrierPowerNonHs_093

(Retired on Utran P6)The distribution of transmitted carrier power for all codes not used for High-Speed Physical Downlink Shared Channel (HS-PDSCH) or HS-SCCH transmission in the range 46.0 - 46.5 dBm

Data Source

NodeB

Source Field

pmTransmittedCarrierPowerNonHs

Source Section

HsDschResources

pmTransmittedCarrierPowerNonHs_094

(Retired on Utran P6)The distribution of transmitted carrier power for all codes not used for High-Speed Physical Downlink Shared Channel (HS-PDSCH) or HS-SCCH transmission in the range 46.5 - 47.0 dBm

Data Source

NodeB

Source Field

pmTransmittedCarrierPowerNonHs

Source Section

HsDschResources

pmTransmittedCarrierPowerNonHs_095

(Retired on Utran P6)The distribution of transmitted carrier power for all codes not used for High-Speed Physical Downlink Shared Channel (HS-PDSCH) or HS-SCCH transmission in the range 47.0 - 47.5 dBm

Data Source

NodeB

Source Field

pmTransmittedCarrierPowerNonHs

Source Section

HsDschResources

pmTransmittedCarrierPowerNonHs_096

(Retired on Utran P6)The distribution of transmitted carrier power for all codes not used for High-Speed Physical Downlink Shared Channel (HS-PDSCH) or HS-SCCH transmission in the range 47.5 - 48.0 dBm

Data Source

NodeB

Source Field

pmTransmittedCarrierPowerNonHs

Source Section

HsDschResources

pmTransmittedCarrierPowerNonHs_097

(Retired on Utran P6)The distribution of transmitted carrier power for all codes not used for High-Speed Physical Downlink Shared Channel (HS-PDSCH) or HS-SCCH transmission in the range 48.0 - 48.5 dBm

Data Source

NodeB

Source Field

pmTransmittedCarrierPowerNonHs

Source Section

HsDschResources

pmTransmittedCarrierPowerNonHs_098

(Retired on Utran P6)The distribution of transmitted carrier power for all codes not used for High-Speed Physical Downlink Shared Channel (HS-PDSCH) or HS-SCCH transmission in the range 48.5 - 49.0 dBm

Data Source

NodeB

Source Field

pmTransmittedCarrierPowerNonHs

Source Section

HsDschResources

pmTransmittedCarrierPowerNonHs_099

(Retired on Utran P6)The distribution of transmitted carrier power for all codes not used for High-Speed Physical Downlink Shared Channel (HS-PDSCH) or HS-SCCH transmission in the range 49.0 - 49.5 dBm

Data Source

NodeB

Source Field

pmTransmittedCarrierPowerNonHs

Source Section

HsDschResources

pmTransmittedCarrierPowerNonHs_100

(Retired on Utran P6)The distribution of transmitted carrier power for all codes not used for High-Speed Physical Downlink Shared Channel (HS-PDSCH) or HS-SCCH transmission in the range 49.5 - 50.0 dBm

Data Source

NodeB

Source Field

pmTransmittedCarrierPowerNonHs

Source Section

HsDschResources

pmTransmittedCarrierPowerNonHs_101

(Retired on Utran P6)The distribution of transmitted carrier power for all codes not used for High-Speed Physical Downlink Shared Channel (HS-PDSCH) or HS-SCCH transmission equal or greater than 50.5 dBm

Data Source

NodeB

Source Field

pmTransmittedCarrierPowerNonHs

Source Section

HsDschResources

pmTransmittedCarrierPowerNonHs_102

(Retired on Utran P6)The distribution of transmitted carrier power for all codes not used for High-Speed Physical Downlink Shared Channel (HS-PDSCH) or HS-SCCH transmission in the range 50.0 - 50.5 dBm

Data Source

NodeB

Source Field

pmTransmittedCarrierPowerNonHs

Source Section

HsDschResources

pmTxCarrierPowerNonHsP6_00

The distribution of transmitted carrier power for all codes not used for High-Speed Physical Downlink Shared Channel (HS-PDSCH) or HS-SCCH transmission in the range <0 dBm

Data Source

NodeB

Source Field

pmTransmittedCarrierPowerNonHs

Source Section

HsDschResources

pmTxCarrierPowerNonHsP6_01

The distribution of transmitted carrier power for all codes not used for High-Speed Physical Downlink Shared Channel (HS-PDSCH) or HS-SCCH transmission in the range 0..1 dBm

Data Source

NodeB

Source Field

pmTransmittedCarrierPowerNonHs

Source Section

HsDschResources

pmTxCarrierPowerNonHsP6_02

The distribution of transmitted carrier power for all codes not used for High-Speed Physical Downlink Shared Channel (HS-PDSCH) or HS-SCCH transmission in the range 1..2 dBm

Data Source

NodeB

Source Field

pmTransmittedCarrierPowerNonHs

Source Section

HsDschResources

pmTxCarrierPowerNonHsP6_03

The distribution of transmitted carrier power for all codes not used for High-Speed Physical Downlink Shared Channel (HS-PDSCH) or HS-SCCH transmission in the range 2..3 dBm

Data Source

NodeB

Source Field

pmTransmittedCarrierPowerNonHs

Source Section

HsDschResources

pmTxCarrierPowerNonHsP6_04

The distribution of transmitted carrier power for all codes not used for High-Speed Physical Downlink Shared Channel (HS-PDSCH) or HS-SCCH transmission in the range 3..4 dBm

Data Source

NodeB

Source Field

pmTransmittedCarrierPowerNonHs

Source Section

HsDschResources

pmTxCarrierPowerNonHsP6_05

The distribution of transmitted carrier power for all codes not used for High-Speed Physical Downlink Shared Channel (HS-PDSCH) or HS-SCCH transmission in the range 4..5 dBm

Data Source

NodeB

Source Field

pmTransmittedCarrierPowerNonHs

Source Section

HsDschResources

pmTxCarrierPowerNonHsP6_06

The distribution of transmitted carrier power for all codes not used for High-Speed Physical Downlink Shared Channel (HS-PDSCH) or HS-SCCH transmission in the range 5..6 dBm

Data Source

NodeB

Source Field

pmTransmittedCarrierPowerNonHs

Source Section

HsDschResources

pmTxCarrierPowerNonHsP6_07

The distribution of transmitted carrier power for all codes not used for High-Speed Physical Downlink Shared Channel (HS-PDSCH) or HS-SCCH transmission in the range 6..7 dBm

Data Source

NodeB

Source Field

pmTransmittedCarrierPowerNonHs

Source Section

HsDschResources

pmTxCarrierPowerNonHsP6_08

The distribution of transmitted carrier power for all codes not used for High-Speed Physical Downlink Shared Channel (HS-PDSCH) or HS-SCCH transmission in the range 7..8 dBm

Data Source

NodeB

Source Field

pmTransmittedCarrierPowerNonHs

Source Section

HsDschResources

pmTxCarrierPowerNonHsP6_09

The distribution of transmitted carrier power for all codes not used for High-Speed Physical Downlink Shared Channel (HS-PDSCH) or HS-SCCH transmission in the range 8..9 dBm

Data Source

NodeB

Source Field

pmTransmittedCarrierPowerNonHs

Source Section

HsDschResources

pmTxCarrierPowerNonHsP6_10

The distribution of transmitted carrier power for all codes not used for High-Speed Physical Downlink Shared Channel (HS-PDSCH) or HS-SCCH transmission in the range 9..10 dBm

Data Source

NodeB

Source Field

pmTransmittedCarrierPowerNonHs

Source Section

HsDschResources

pmTxCarrierPowerNonHsP6_11

The distribution of transmitted carrier power for all codes not used for High-Speed Physical Downlink Shared Channel (HS-PDSCH) or HS-SCCH transmission in the range 10..11 dBm

Data Source

NodeB

Source Field

pmTransmittedCarrierPowerNonHs

Source Section

HsDschResources

pmTxCarrierPowerNonHsP6_12

The distribution of transmitted carrier power for all codes not used for High-Speed Physical Downlink Shared Channel (HS-PDSCH) or HS-SCCH transmission in the range 11..12 dBm

Data Source

NodeB

Source Field

pmTransmittedCarrierPowerNonHs

Source Section

HsDschResources

pmTxCarrierPowerNonHsP6_13

The distribution of transmitted carrier power for all codes not used for High-Speed Physical Downlink Shared Channel (HS-PDSCH) or HS-SCCH transmission in the range 12..13 dBm

Data Source

NodeB

Source Field

pmTransmittedCarrierPowerNonHs

Source Section

HsDschResources

pmTxCarrierPowerNonHsP6_14

The distribution of transmitted carrier power for all codes not used for High-Speed Physical Downlink Shared Channel (HS-PDSCH) or HS-SCCH transmission in the range 13..14 dBm

Data Source

NodeB

Source Field

pmTransmittedCarrierPowerNonHs

Source Section

HsDschResources

pmTxCarrierPowerNonHsP6_15

The distribution of transmitted carrier power for all codes not used for High-Speed Physical Downlink Shared Channel (HS-PDSCH) or HS-SCCH transmission in the range 14..15 dBm

Data Source

NodeB

Source Field

pmTransmittedCarrierPowerNonHs

Source Section

HsDschResources

pmTxCarrierPowerNonHsP6_16

The distribution of transmitted carrier power for all codes not used for High-Speed Physical Downlink Shared Channel (HS-PDSCH) or HS-SCCH transmission in the range 15..16 dBm

Data Source

NodeB

Source Field

pmTransmittedCarrierPowerNonHs

Source Section

HsDschResources

pmTxCarrierPowerNonHsP6_17

The distribution of transmitted carrier power for all codes not used for High-Speed Physical Downlink Shared Channel (HS-PDSCH) or HS-SCCH transmission in the range 16..17 dBm

Data Source

NodeB

Source Field

pmTransmittedCarrierPowerNonHs

Source Section

HsDschResources

pmTxCarrierPowerNonHsP6_18

The distribution of transmitted carrier power for all codes not used for High-Speed Physical Downlink Shared Channel (HS-PDSCH) or HS-SCCH transmission in the range 17..18 dBm

Data Source

NodeB

Source Field

pmTransmittedCarrierPowerNonHs

Source Section

HsDschResources

pmTxCarrierPowerNonHsP6_19

The distribution of transmitted carrier power for all codes not used for High-Speed Physical Downlink Shared Channel (HS-PDSCH) or HS-SCCH transmission in the range 18..19 dBm

Data Source

NodeB

Source Field

pmTransmittedCarrierPowerNonHs

Source Section

HsDschResources

pmTxCarrierPowerNonHsP6_20

The distribution of transmitted carrier power for all codes not used for High-Speed Physical Downlink Shared Channel (HS-PDSCH) or HS-SCCH transmission in the range 19..20 dBm

Data Source

NodeB

Source Field

pmTransmittedCarrierPowerNonHs

Source Section

HsDschResources

pmTxCarrierPowerNonHsP6_21

The distribution of transmitted carrier power for all codes not used for High-Speed Physical Downlink Shared Channel (HS-PDSCH) or HS-SCCH transmission in the range 20..21 dBm

Data Source

NodeB

Source Field

pmTransmittedCarrierPowerNonHs

Source Section

HsDschResources

pmTxCarrierPowerNonHsP6_22

The distribution of transmitted carrier power for all codes not used for High-Speed Physical Downlink Shared Channel (HS-PDSCH) or HS-SCCH transmission in the range 21..22 dBm

Data Source

NodeB

Source Field

pmTransmittedCarrierPowerNonHs

Source Section

HsDschResources

pmTxCarrierPowerNonHsP6_23

The distribution of transmitted carrier power for all codes not used for High-Speed Physical Downlink Shared Channel (HS-PDSCH) or HS-SCCH transmission in the range 22..23 dBm

Data Source

NodeB

Source Field

pmTransmittedCarrierPowerNonHs

Source Section

HsDschResources

pmTxCarrierPowerNonHsP6_24

The distribution of transmitted carrier power for all codes not used for High-Speed Physical Downlink Shared Channel (HS-PDSCH) or HS-SCCH transmission in the range 23..24 dBm

Data Source

NodeB

Source Field

pmTransmittedCarrierPowerNonHs

Source Section

HsDschResources

pmTxCarrierPowerNonHsP6_25

The distribution of transmitted carrier power for all codes not used for High-Speed Physical Downlink Shared Channel (HS-PDSCH) or HS-SCCH transmission in the range 24..25 dBm

Data Source

NodeB

Source Field

pmTransmittedCarrierPowerNonHs

Source Section

HsDschResources

pmTxCarrierPowerNonHsP6_26

The distribution of transmitted carrier power for all codes not used for High-Speed Physical Downlink Shared Channel (HS-PDSCH) or HS-SCCH transmission in the range 25..26 dBm

Data Source

NodeB

Source Field

pmTransmittedCarrierPowerNonHs

Source Section

HsDschResources

pmTxCarrierPowerNonHsP6_27

The distribution of transmitted carrier power for all codes not used for High-Speed Physical Downlink Shared Channel (HS-PDSCH) or HS-SCCH transmission in the range 26..27 dBm

Data Source

NodeB

Source Field

pmTransmittedCarrierPowerNonHs

Source Section

HsDschResources

pmTxCarrierPowerNonHsP6_28

The distribution of transmitted carrier power for all codes not used for High-Speed Physical Downlink Shared Channel (HS-PDSCH) or HS-SCCH transmission in the range 27..28 dBm

Data Source

NodeB

Source Field

pmTransmittedCarrierPowerNonHs

Source Section

HsDschResources

pmTxCarrierPowerNonHsP6_29

The distribution of transmitted carrier power for all codes not used for High-Speed Physical Downlink Shared Channel (HS-PDSCH) or HS-SCCH transmission in the range 28..29 dBm

Data Source

NodeB

Source Field

pmTransmittedCarrierPowerNonHs

Source Section

HsDschResources

pmTxCarrierPowerNonHsP6_30

The distribution of transmitted carrier power for all codes not used for High-Speed Physical Downlink Shared Channel (HS-PDSCH) or HS-SCCH transmission in the range 29..30 dBm

Data Source

NodeB

Source Field

pmTransmittedCarrierPowerNonHs

Source Section

HsDschResources

pmTxCarrierPowerNonHsP6_31

The distribution of transmitted carrier power for all codes not used for High-Speed Physical Downlink Shared Channel (HS-PDSCH) or HS-SCCH transmission in the range 30..31 dBm

Data Source

NodeB

Source Field

pmTransmittedCarrierPowerNonHs

Source Section

HsDschResources

pmTxCarrierPowerNonHsP6_32

The distribution of transmitted carrier power for all codes not used for High-Speed Physical Downlink Shared Channel (HS-PDSCH) or HS-SCCH transmission in the range 31..32 dBm

Data Source

NodeB

Source Field

pmTransmittedCarrierPowerNonHs

Source Section

HsDschResources

pmTxCarrierPowerNonHsP6_33

The distribution of transmitted carrier power for all codes not used for High-Speed Physical Downlink Shared Channel (HS-PDSCH) or HS-SCCH transmission in the range 32..33 dBm

Data Source

NodeB

Source Field

pmTransmittedCarrierPowerNonHs

Source Section

HsDschResources

pmTxCarrierPowerNonHsP6_34

The distribution of transmitted carrier power for all codes not used for High-Speed Physical Downlink Shared Channel (HS-PDSCH) or HS-SCCH transmission in the range 33..34 dBm

Data Source

NodeB

Source Field

pmTransmittedCarrierPowerNonHs

Source Section

HsDschResources

pmTxCarrierPowerNonHsP6_35

The distribution of transmitted carrier power for all codes not used for High-Speed Physical Downlink Shared Channel (HS-PDSCH) or HS-SCCH transmission in the range 34..35 dBm

Data Source

NodeB

Source Field

pmTransmittedCarrierPowerNonHs

Source Section

HsDschResources

pmTxCarrierPowerNonHsP6_36

The distribution of transmitted carrier power for all codes not used for High-Speed Physical Downlink Shared Channel (HS-PDSCH) or HS-SCCH transmission in the range 35..36 dBm

Data Source

NodeB

Source Field

pmTransmittedCarrierPowerNonHs

Source Section

HsDschResources

pmTxCarrierPowerNonHsP6_37

The distribution of transmitted carrier power for all codes not used for High-Speed Physical Downlink Shared Channel (HS-PDSCH) or HS-SCCH transmission in the range 36..37 dBm

Data Source

NodeB

Source Field

pmTransmittedCarrierPowerNonHs

Source Section

HsDschResources

pmTxCarrierPowerNonHsP6_38

The distribution of transmitted carrier power for all codes not used for High-Speed Physical Downlink Shared Channel (HS-PDSCH) or HS-SCCH transmission in the range 37..38 dBm

Data Source

NodeB

Source Field

pmTransmittedCarrierPowerNonHs

Source Section

HsDschResources

pmTxCarrierPowerNonHsP6_39

The distribution of transmitted carrier power for all codes not used for High-Speed Physical Downlink Shared Channel (HS-PDSCH) or HS-SCCH transmission in the range 38..39 dBm

Data Source

NodeB

Source Field

pmTransmittedCarrierPowerNonHs

Source Section

HsDschResources

pmTxCarrierPowerNonHsP6_40

The distribution of transmitted carrier power for all codes not used for High-Speed Physical Downlink Shared Channel (HS-PDSCH) or HS-SCCH transmission in the range 39..40 dBm

Data Source

NodeB

Source Field

pmTransmittedCarrierPowerNonHs

Source Section

HsDschResources

pmTxCarrierPowerNonHsP6_41

The distribution of transmitted carrier power for all codes not used for High-Speed Physical Downlink Shared Channel (HS-PDSCH) or HS-SCCH transmission in the range 40..41 dBm

Data Source

NodeB

Source Field

pmTransmittedCarrierPowerNonHs

Source Section

HsDschResources

pmTxCarrierPowerNonHsP6_42

The distribution of transmitted carrier power for all codes not used for High-Speed Physical Downlink Shared Channel (HS-PDSCH) or HS-SCCH transmission in the range 41..42 dBm

Data Source

NodeB

Source Field

pmTransmittedCarrierPowerNonHs

Source Section

HsDschResources

pmTxCarrierPowerNonHsP6_43

The distribution of transmitted carrier power for all codes not used for High-Speed Physical Downlink Shared Channel (HS-PDSCH) or HS-SCCH transmission in the range 42..43 dBm

Data Source

NodeB

Source Field

pmTransmittedCarrierPowerNonHs

Source Section

HsDschResources

pmTxCarrierPowerNonHsP6_44

The distribution of transmitted carrier power for all codes not used for High-Speed Physical Downlink Shared Channel (HS-PDSCH) or HS-SCCH transmission in the range 43..44 dBm

Data Source

NodeB

Source Field

pmTransmittedCarrierPowerNonHs

Source Section

HsDschResources

pmTxCarrierPowerNonHsP6_45

The distribution of transmitted carrier power for all codes not used for High-Speed Physical Downlink Shared Channel (HS-PDSCH) or HS-SCCH transmission in the range 44..45 dBm

Data Source

NodeB

Source Field

pmTransmittedCarrierPowerNonHs

Source Section

HsDschResources

pmTxCarrierPowerNonHsP6_46

The distribution of transmitted carrier power for all codes not used for High-Speed Physical Downlink Shared Channel (HS-PDSCH) or HS-SCCH transmission in the range 45..46 dBm

Data Source

NodeB

Source Field

pmTransmittedCarrierPowerNonHs

Source Section

HsDschResources

pmTxCarrierPowerNonHsP6_47

The distribution of transmitted carrier power for all codes not used for High-Speed Physical Downlink Shared Channel (HS-PDSCH) or HS-SCCH transmission in the range 46..47 dBm

Data Source

NodeB

Source Field

pmTransmittedCarrierPowerNonHs

Source Section

HsDschResources

pmTxCarrierPowerNonHsP6_48

The distribution of transmitted carrier power for all codes not used for High-Speed Physical Downlink Shared Channel (HS-PDSCH) or HS-SCCH transmission in the range 47..48 dBm

Data Source

NodeB

Source Field

pmTransmittedCarrierPowerNonHs

Source Section

HsDschResources

pmTxCarrierPowerNonHsP6_49

The distribution of transmitted carrier power for all codes not used for High-Speed Physical Downlink Shared Channel (HS-PDSCH) or HS-SCCH transmission in the range 48..49 dBm

Data Source

NodeB

Source Field

pmTransmittedCarrierPowerNonHs

Source Section

HsDschResources

pmTxCarrierPowerNonHsP6_50

The distribution of transmitted carrier power for all codes not used for High-Speed Physical Downlink Shared Channel (HS-PDSCH) or HS-SCCH transmission in the range 49..50 dBm

Data Source

NodeB

Source Field

pmTransmittedCarrierPowerNonHs

Source Section

HsDschResources

pmTxCarrierPowerNonHsP6_51

The distribution of transmitted carrier power for all codes not used for High-Speed Physical Downlink Shared Channel (HS-PDSCH) or HS-SCCH transmission in the range >50 dBm

Data Source

NodeB

Source Field

pmTransmittedCarrierPowerNonHs

Source Section

HsDschResources

pmUsedCqi_0

The adjusted CQI, which is used to calculate the transport format when the user is transmitting on the high-speed-DSCH in the range 0 to 1. This counter is only relevant for UEs not using MIMO.

Data Source

NodeB

Source Field

pmUsedCqi

Source Section

HsDschResources

pmUsedCqi_1

The adjusted CQI, which is used to calculate the transport format when the user is transmitting on the high-speed-DSCH in the range 1 to 2. This counter is only relevant for UEs not using MIMO.

Data Source

NodeB

Source Field

pmUsedCqi

Source Section

HsDschResources

pmUsedCqi_10

The adjusted CQI, which is used to calculate the transport format when the user is transmitting on the high-speed-DSCH in the range 10 to 11. This counter is only relevant for UEs not using MIMO.

Data Source

NodeB

Source Field

pmUsedCqi

Source Section

HsDschResources

pmUsedCqi_11

The adjusted CQI, which is used to calculate the transport format when the user is transmitting on the high-speed-DSCH in the range 11 to 12. This counter is only relevant for UEs not using MIMO.

Data Source

NodeB

Source Field

pmUsedCqi

Source Section

HsDschResources

pmUsedCqi_12

The adjusted CQI, which is used to calculate the transport format when the user is transmitting on the high-speed-DSCH in the range 12 to 13. This counter is only relevant for UEs not using MIMO.

Data Source

NodeB

Source Field

pmUsedCqi

Source Section

HsDschResources

pmUsedCqi_13

The adjusted CQI, which is used to calculate the transport format when the user is transmitting on the high-speed-DSCH in the range 13 to 14. This counter is only relevant for UEs not using MIMO.

Data Source

NodeB

Source Field

pmUsedCqi

Source Section

HsDschResources

pmUsedCqi_14

The adjusted CQI, which is used to calculate the transport format when the user is transmitting on the high-speed-DSCH in the range 14 to 15. This counter is only relevant for UEs not using MIMO.

Data Source

NodeB

Source Field

pmUsedCqi

Source Section

HsDschResources

pmUsedCqi_15

The adjusted CQI, which is used to calculate the transport format when the user is transmitting on the high-speed-DSCH in the range 15 to 16. This counter is only relevant for UEs not using MIMO.

Data Source

NodeB

Source Field

pmUsedCqi

Source Section

HsDschResources

pmUsedCqi_16

The adjusted CQI, which is used to calculate the transport format when the user is transmitting on the high-speed-DSCH in the range 16 to 17. This counter is only relevant for UEs not using MIMO.

Data Source

NodeB

Source Field

pmUsedCqi

Source Section

HsDschResources

pmUsedCqi_17

The adjusted CQI, which is used to calculate the transport format when the user is transmitting on the high-speed-DSCH in the range 17 to 18. This counter is only relevant for UEs not using MIMO.

Data Source

NodeB

Source Field

pmUsedCqi

Source Section

HsDschResources

pmUsedCqi_18

The adjusted CQI, which is used to calculate the transport format when the user is transmitting on the high-speed-DSCH in the range 18 to 19. This counter is only relevant for UEs not using MIMO.

Data Source

NodeB

Source Field

pmUsedCqi

Source Section

HsDschResources

pmUsedCqi_19

The adjusted CQI, which is used to calculate the transport format when the user is transmitting on the high-speed-DSCH in the range 19 to 20. This counter is only relevant for UEs not using MIMO.

Data Source

NodeB

Source Field

pmUsedCqi

Source Section

HsDschResources

pmUsedCqi_2

The adjusted CQI, which is used to calculate the transport format when the user is transmitting on the high-speed-DSCH in the range 2 to 3. This counter is only relevant for UEs not using MIMO.

Data Source

NodeB

Source Field

pmUsedCqi

Source Section

HsDschResources

pmUsedCqi_20

The adjusted CQI, which is used to calculate the transport format when the user is transmitting on the high-speed-DSCH in the range 20 to 21. This counter is only relevant for UEs not using MIMO.

Data Source

NodeB

Source Field

pmUsedCqi

Source Section

HsDschResources

pmUsedCqi_21

The adjusted CQI, which is used to calculate the transport format when the user is transmitting on the high-speed-DSCH in the range 21 to 22. This counter is only relevant for UEs not using MIMO.

Data Source

NodeB

Source Field

pmUsedCqi

Source Section

HsDschResources

pmUsedCqi_22

The adjusted CQI, which is used to calculate the transport format when the user is transmitting on the high-speed-DSCH in the range 22 to 23. This counter is only relevant for UEs not using MIMO.

Data Source

NodeB

Source Field

pmUsedCqi

Source Section

HsDschResources

pmUsedCqi_23

The adjusted CQI, which is used to calculate the transport format when the user is transmitting on the high-speed-DSCH in the range 23 to 24. This counter is only relevant for UEs not using MIMO.

Data Source

NodeB

Source Field

pmUsedCqi

Source Section

HsDschResources

pmUsedCqi_24

The adjusted CQI, which is used to calculate the transport format when the user is transmitting on the high-speed-DSCH in the range 24 to 25. This counter is only relevant for UEs not using MIMO.

Data Source

NodeB

Source Field

pmUsedCqi

Source Section

HsDschResources

pmUsedCqi_25

The adjusted CQI, which is used to calculate the transport format when the user is transmitting on the high-speed-DSCH in the range 25 to 26. This counter is only relevant for UEs not using MIMO.

Data Source

NodeB

Source Field

pmUsedCqi

Source Section

HsDschResources

pmUsedCqi_26

The adjusted CQI, which is used to calculate the transport format when the user is transmitting on the high-speed-DSCH in the range 26 to 27. This counter is only relevant for UEs not using MIMO.

Data Source

NodeB

Source Field

pmUsedCqi

Source Section

HsDschResources

pmUsedCqi_27

The adjusted CQI, which is used to calculate the transport format when the user is transmitting on the high-speed-DSCH in the range 27 to 28. This counter is only relevant for UEs not using MIMO.

Data Source

NodeB

Source Field

pmUsedCqi

Source Section

HsDschResources

pmUsedCqi_28

The adjusted CQI, which is used to calculate the transport format when the user is transmitting on the high-speed-DSCH in the range 28 to 29. This counter is only relevant for UEs not using MIMO.

Data Source

NodeB

Source Field

pmUsedCqi

Source Section

HsDschResources

pmUsedCqi_29

The adjusted CQI, which is used to calculate the transport format when the user is transmitting on the high-speed-DSCH in the range 29 to 30. This counter is only relevant for UEs not using MIMO.

Data Source

NodeB

Source Field

pmUsedCqi

Source Section

HsDschResources

pmUsedCqi_3

The adjusted CQI, which is used to calculate the transport format when the user is transmitting on the high-speed-DSCH in the range 3 to 4. This counter is only relevant for UEs not using MIMO.

Data Source

NodeB

Source Field

pmUsedCqi

Source Section

HsDschResources

pmUsedCqi_30

The adjusted CQI, which is used to calculate the transport format when the user is transmitting on the high-speed-DSCH in the range 30 to 31. This counter is only relevant for UEs not using MIMO.

Data Source

NodeB

Source Field

pmUsedCqi

Source Section

HsDschResources

pmUsedCqi_4

The adjusted CQI, which is used to calculate the transport format when the user is transmitting on the high-speed-DSCH in the range 4 to 5. This counter is only relevant for UEs not using MIMO.

Data Source

NodeB

Source Field

pmUsedCqi

Source Section

HsDschResources

pmUsedCqi_5

The adjusted CQI, which is used to calculate the transport format when the user is transmitting on the high-speed-DSCH in the range 5 to 6. This counter is only relevant for UEs not using MIMO.

Data Source

NodeB

Source Field

pmUsedCqi

Source Section

HsDschResources

pmUsedCqi_6

The adjusted CQI, which is used to calculate the transport format when the user is transmitting on the high-speed-DSCH in the range 6 to 7. This counter is only relevant for UEs not using MIMO.

Data Source

NodeB

Source Field

pmUsedCqi

Source Section

HsDschResources

pmUsedCqi_7

The adjusted CQI, which is used to calculate the transport format when the user is transmitting on the high-speed-DSCH in the range 7 to 8. This counter is only relevant for UEs not using MIMO.

Data Source

NodeB

Source Field

pmUsedCqi

Source Section

HsDschResources

pmUsedCqi_8

The adjusted CQI, which is used to calculate the transport format when the user is transmitting on the high-speed-DSCH in the range 8 to 9. This counter is only relevant for UEs not using MIMO.

Data Source

NodeB

Source Field

pmUsedCqi

Source Section

HsDschResources

pmUsedCqi_9

The adjusted CQI, which is used to calculate the transport format when the user is transmitting on the high-speed-DSCH in the range 9 to 10. This counter is only relevant for UEs not using MIMO.

Data Source

NodeB

Source Field

pmUsedCqi

Source Section

HsDschResources

pmUsedHsPdschCodes_00

The distribution of the HS-PDSCH code utilization, as the number of HS-PDSCH codes used by the scheduler. Range: 0 code

Data Source

NodeB

Source Field

pmUsedHsPdschCodes

Source Section

HsDschResources

pmUsedHsPdschCodes_01

The distribution of the HS-PDSCH code utilization, as the number of HS-PDSCH codes used by the scheduler. Range: 1 code

Data Source

NodeB

Source Field

pmUsedHsPdschCodes

Source Section

HsDschResources

pmUsedHsPdschCodes_02

The distribution of the HS-PDSCH code utilization, as the number of HS-PDSCH codes used by the scheduler. Range: 2 code

Data Source

NodeB

Source Field

pmUsedHsPdschCodes

Source Section

HsDschResources

pmUsedHsPdschCodes_03

The distribution of the HS-PDSCH code utilization, as the number of HS-PDSCH codes used by the scheduler. Range: 3 code

Data Source

NodeB

Source Field

pmUsedHsPdschCodes

Source Section

HsDschResources

pmUsedHsPdschCodes_04

The distribution of the HS-PDSCH code utilization, as the number of HS-PDSCH codes used by the scheduler. Range: 4 code

Data Source

NodeB

Source Field

pmUsedHsPdschCodes

Source Section

HsDschResources

pmUsedHsPdschCodes_05

The distribution of the HS-PDSCH code utilization, as the number of HS-PDSCH codes used by the scheduler. Range: 5 code

Data Source

NodeB

Source Field

pmUsedHsPdschCodes

Source Section

HsDschResources

pmUsedHsPdschCodes_06

The distribution of the HS-PDSCH code utilization, as the number of HS-PDSCH codes used by the scheduler. Range: 6 code

Data Source

NodeB

Source Field

pmUsedHsPdschCodes

Source Section

HsDschResources

pmUsedHsPdschCodes_07

The distribution of the HS-PDSCH code utilization, as the number of HS-PDSCH codes used by the scheduler. Range: 7 code

Data Source

NodeB

Source Field

pmUsedHsPdschCodes

Source Section

HsDschResources

pmUsedHsPdschCodes_08

The distribution of the HS-PDSCH code utilization, as the number of HS-PDSCH codes used by the scheduler. Range: 8 code

Data Source

NodeB

Source Field

pmUsedHsPdschCodes

Source Section

HsDschResources

pmUsedHsPdschCodes_09

The distribution of the HS-PDSCH code utilization, as the number of HS-PDSCH codes used by the scheduler. Range: 9 code

Data Source

NodeB

Source Field

pmUsedHsPdschCodes

Source Section

HsDschResources

pmUsedHsPdschCodes_10

The distribution of the HS-PDSCH code utilization, as the number of HS-PDSCH codes used by the scheduler. Range: 10 code

Data Source

NodeB

Source Field

pmUsedHsPdschCodes

Source Section

HsDschResources

pmUsedHsPdschCodes_11

The distribution of the HS-PDSCH code utilization, as the number of HS-PDSCH codes used by the scheduler. Range: 11 code

Data Source

NodeB

Source Field

pmUsedHsPdschCodes

Source Section

HsDschResources

pmUsedHsPdschCodes_12

The distribution of the HS-PDSCH code utilization, as the number of HS-PDSCH codes used by the scheduler. Range: 12 code

Data Source

NodeB

Source Field

pmUsedHsPdschCodes

Source Section

HsDschResources

pmUsedHsPdschCodes_13

The distribution of the HS-PDSCH code utilization, as the number of HS-PDSCH codes used by the scheduler. Range: 13 code

Data Source

NodeB

Source Field

pmUsedHsPdschCodes

Source Section

HsDschResources

pmUsedHsPdschCodes_14

The distribution of the HS-PDSCH code utilization, as the number of HS-PDSCH codes used by the scheduler. Range: 14 code

Data Source

NodeB

Source Field

pmUsedHsPdschCodes

Source Section

HsDschResources

pmUsedHsPdschCodes_15

The distribution of the HS-PDSCH code utilization, as the number of HS-PDSCH codes used by the scheduler. Range: 15 code

Data Source

NodeB

Source Field

pmUsedHsPdschCodes

Source Section

HsDschResources

pmUsedTbs16Qam_01

Counting the number of used transport block size with 16QAM. A transport block is a HARQ data block MAC-hs) Power Distribution Unit (PDU). The number of HARQ transmissions and retransmissions on the MAC-hs layer are counted.

Data Source

NodeB

Source Field

pmUsedTbs16Qam

Source Section

HsDschResources

pmUsedTbs16Qam_02

Counting the number of used transport block size with 16QAM. A transport block is a HARQ data block MAC-hs) Power Distribution Unit (PDU). The number of HARQ transmissions and retransmissions on the MAC-hs layer are counted.

Data Source

NodeB

Source Field

pmUsedTbs16Qam

Source Section

HsDschResources

pmUsedTbs16Qam_03

Counting the number of used transport block size with 16QAM. A transport block is a HARQ data block MAC-hs) Power Distribution Unit (PDU). The number of HARQ transmissions and retransmissions on the MAC-hs layer are counted.

Data Source

NodeB

Source Field

pmUsedTbs16Qam

Source Section

HsDschResources

pmUsedTbs16Qam_04

Counting the number of used transport block size with 16QAM. A transport block is a HARQ data block MAC-hs) Power Distribution Unit (PDU). The number of HARQ transmissions and retransmissions on the MAC-hs layer are counted.

Data Source

NodeB

Source Field

pmUsedTbs16Qam

Source Section

HsDschResources

pmUsedTbs16Qam_05

Counting the number of used transport block size with 16QAM. A transport block is a HARQ data block MAC-hs) Power Distribution Unit (PDU). The number of HARQ transmissions and retransmissions on the MAC-hs layer are counted.

Data Source

NodeB

Source Field

pmUsedTbs16Qam

Source Section

HsDschResources

pmUsedTbs16Qam_06

Counting the number of used transport block size with 16QAM. A transport block is a HARQ data block MAC-hs) Power Distribution Unit (PDU). The number of HARQ transmissions and retransmissions on the MAC-hs layer are counted.

Data Source

NodeB

Source Field

pmUsedTbs16Qam

Source Section

HsDschResources

pmUsedTbs16Qam_07

Counting the number of used transport block size with 16QAM. A transport block is a HARQ data block MAC-hs) Power Distribution Unit (PDU). The number of HARQ transmissions and retransmissions on the MAC-hs layer are counted.

Data Source

NodeB

Source Field

pmUsedTbs16Qam

Source Section

HsDschResources

pmUsedTbs16Qam_08

Counting the number of used transport block size with 16QAM. A transport block is a HARQ data block MAC-hs) Power Distribution Unit (PDU). The number of HARQ transmissions and retransmissions on the MAC-hs layer are counted.

Data Source

NodeB

Source Field

pmUsedTbs16Qam

Source Section

HsDschResources

pmUsedTbs16Qam_09

Counting the number of used transport block size with 16QAM. A transport block is a HARQ data block MAC-hs) Power Distribution Unit (PDU). The number of HARQ transmissions and retransmissions on the MAC-hs layer are counted.

Data Source

NodeB

Source Field

pmUsedTbs16Qam

Source Section

HsDschResources

pmUsedTbs16Qam_10

Counting the number of used transport block size with 16QAM. A transport block is a HARQ data block MAC-hs) Power Distribution Unit (PDU). The number of HARQ transmissions and retransmissions on the MAC-hs layer are counted.

Data Source

NodeB

Source Field

pmUsedTbs16Qam

Source Section

HsDschResources

pmUsedTbs16Qam_11

Counting the number of used transport block size with 16QAM. A transport block is a HARQ data block MAC-hs) Power Distribution Unit (PDU). The number of HARQ transmissions and retransmissions on the MAC-hs layer are counted.

Data Source

NodeB

Source Field

pmUsedTbs16Qam

Source Section

HsDschResources

pmUsedTbs16Qam_12

Counting the number of used transport block size with 16QAM. A transport block is a HARQ data block MAC-hs) Power Distribution Unit (PDU). The number of HARQ transmissions and retransmissions on the MAC-hs layer are counted.

Data Source

NodeB

Source Field

pmUsedTbs16Qam

Source Section

HsDschResources

pmUsedTbs16Qam_13

Counting the number of used transport block size with 16QAM. A transport block is a HARQ data block MAC-hs) Power Distribution Unit (PDU). The number of HARQ transmissions and retransmissions on the MAC-hs layer are counted.

Data Source

NodeB

Source Field

pmUsedTbs16Qam

Source Section

HsDschResources

pmUsedTbs16Qam_14

Counting the number of used transport block size with 16QAM. A transport block is a HARQ data block MAC-hs) Power Distribution Unit (PDU). The number of HARQ transmissions and retransmissions on the MAC-hs layer are counted.

Data Source

NodeB

Source Field

pmUsedTbs16Qam

Source Section

HsDschResources

pmUsedTbs16Qam_15

Counting the number of used transport block size with 16QAM. A transport block is a HARQ data block MAC-hs) Power Distribution Unit (PDU). The number of HARQ transmissions and retransmissions on the MAC-hs layer are counted.

Data Source

NodeB

Source Field

pmUsedTbs16Qam

Source Section

HsDschResources

pmUsedTbs16Qam_16

Counting the number of used transport block size with 16QAM. A transport block is a HARQ data block MAC-hs) Power Distribution Unit (PDU). The number of HARQ transmissions and retransmissions on the MAC-hs layer are counted.

Data Source

NodeB

Source Field

pmUsedTbs16Qam

Source Section

HsDschResources

pmUsedTbs16Qam_17

Counting the number of used transport block size with 16QAM. A transport block is a HARQ data block MAC-hs) Power Distribution Unit (PDU). The number of HARQ transmissions and retransmissions on the MAC-hs layer are counted.

Data Source

NodeB

Source Field

pmUsedTbs16Qam

Source Section

HsDschResources

pmUsedTbs16Qam_18

Counting the number of used transport block size with 16QAM. A transport block is a HARQ data block MAC-hs) Power Distribution Unit (PDU). The number of HARQ transmissions and retransmissions on the MAC-hs layer are counted.

Data Source

NodeB

Source Field

pmUsedTbs16Qam

Source Section

HsDschResources

pmUsedTbs16Qam_19

Counting the number of used transport block size with 16QAM. A transport block is a HARQ data block MAC-hs) Power Distribution Unit (PDU). The number of HARQ transmissions and retransmissions on the MAC-hs layer are counted.

Data Source

NodeB

Source Field

pmUsedTbs16Qam

Source Section

HsDschResources

pmUsedTbs16Qam_20

Counting the number of used transport block size with 16QAM. A transport block is a HARQ data block MAC-hs) Power Distribution Unit (PDU). The number of HARQ transmissions and retransmissions on the MAC-hs layer are counted.

Data Source

NodeB

Source Field

pmUsedTbs16Qam

Source Section

HsDschResources

pmUsedTbs16Qam_21

Counting the number of used transport block size with 16QAM. A transport block is a HARQ data block MAC-hs) Power Distribution Unit (PDU). The number of HARQ transmissions and retransmissions on the MAC-hs layer are counted.

Data Source

NodeB

Source Field

pmUsedTbs16Qam

Source Section

HsDschResources

pmUsedTbs16Qam_22

Counting the number of used transport block size with 16QAM. A transport block is a HARQ data block MAC-hs) Power Distribution Unit (PDU). The number of HARQ transmissions and retransmissions on the MAC-hs layer are counted.

Data Source

NodeB

Source Field

pmUsedTbs16Qam

Source Section

HsDschResources

pmUsedTbs16Qam_23

Counting the number of used transport block size with 16QAM. A transport block is a HARQ data block MAC-hs) Power Distribution Unit (PDU). The number of HARQ transmissions and retransmissions on the MAC-hs layer are counted.

Data Source

NodeB

Source Field

pmUsedTbs16Qam

Source Section

HsDschResources

pmUsedTbs16Qam_24

Counting the number of used transport block size with 16QAM. A transport block is a HARQ data block MAC-hs) Power Distribution Unit (PDU). The number of HARQ transmissions and retransmissions on the MAC-hs layer are counted.

Data Source

NodeB

Source Field

pmUsedTbs16Qam

Source Section

HsDschResources

pmUsedTbs16Qam_25

Counting the number of used transport block size with 16QAM. A transport block is a HARQ data block MAC-hs) Power Distribution Unit (PDU). The number of HARQ transmissions and retransmissions on the MAC-hs layer are counted.

Data Source

NodeB

Source Field

pmUsedTbs16Qam

Source Section

HsDschResources

pmUsedTbs16Qam_26

Counting the number of used transport block size with 16QAM. A transport block is a HARQ data block MAC-hs) Power Distribution Unit (PDU). The number of HARQ transmissions and retransmissions on the MAC-hs layer are counted.

Data Source

NodeB

Source Field

pmUsedTbs16Qam

Source Section

HsDschResources

pmUsedTbs16Qam_27

Counting the number of used transport block size with 16QAM. A transport block is a HARQ data block MAC-hs) Power Distribution Unit (PDU). The number of HARQ transmissions and retransmissions on the MAC-hs layer are counted.

Data Source

NodeB

Source Field

pmUsedTbs16Qam

Source Section

HsDschResources

pmUsedTbs16Qam_28

Counting the number of used transport block size with 16QAM. A transport block is a HARQ data block MAC-hs) Power Distribution Unit (PDU). The number of HARQ transmissions and retransmissions on the MAC-hs layer are counted.

Data Source

NodeB

Source Field

pmUsedTbs16Qam

Source Section

HsDschResources

pmUsedTbs16Qam_29

Counting the number of used transport block size with 16QAM. A transport block is a HARQ data block MAC-hs) Power Distribution Unit (PDU). The number of HARQ transmissions and retransmissions on the MAC-hs layer are counted.

Data Source

NodeB

Source Field

pmUsedTbs16Qam

Source Section

HsDschResources

pmUsedTbs16Qam_30

Counting the number of used transport block size with 16QAM. A transport block is a HARQ data block MAC-hs) Power Distribution Unit (PDU). The number of HARQ transmissions and retransmissions on the MAC-hs layer are counted.

Data Source

NodeB

Source Field

pmUsedTbs16Qam

Source Section

HsDschResources

pmUsedTbs64Qam_00

Counting the number of used transport block size (TBS) with 64QAM. The number of successful HARQ transmissions are counted on the MAC-hs layer. Range: number of used transport blocks with size 0..1000 bits

Data Source

NodeB

Source Field

pmUsedTbs64Qam

Source Section

HsDschResources

pmUsedTbs64Qam_01

Counting the number of used transport block size (TBS) with 64QAM. The number of successful HARQ transmissions are counted on the MAC-hs layer. Range: number of used transport blocks with size 1001..2000 bits

Data Source

NodeB

Source Field

pmUsedTbs64Qam

Source Section

HsDschResources

pmUsedTbs64Qam_02

Counting the number of used transport block size (TBS) with 64QAM. The number of successful HARQ transmissions are counted on the MAC-hs layer. Range: number of used transport blocks with size 2001..3000 bits

Data Source

NodeB

Source Field

pmUsedTbs64Qam

Source Section

HsDschResources

pmUsedTbs64Qam_03

Counting the number of used transport block size (TBS) with 64QAM. The number of successful HARQ transmissions are counted on the MAC-hs layer. Range: number of used transport blocks with size 3001..4000 bits

Data Source

NodeB

Source Field

pmUsedTbs64Qam

Source Section

HsDschResources

pmUsedTbs64Qam_04

Counting the number of used transport block size (TBS) with 64QAM. The number of successful HARQ transmissions are counted on the MAC-hs layer. Range: number of used transport blocks with size 4001..5000 bits

Data Source

NodeB

Source Field

pmUsedTbs64Qam

Source Section

HsDschResources

pmUsedTbs64Qam_05

Counting the number of used transport block size (TBS) with 64QAM. The number of successful HARQ transmissions are counted on the MAC-hs layer. Range: number of used transport blocks with size 5001..6000 bits

Data Source

NodeB

Source Field

pmUsedTbs64Qam

Source Section

HsDschResources

pmUsedTbs64Qam_06

Counting the number of used transport block size (TBS) with 64QAM. The number of successful HARQ transmissions are counted on the MAC-hs layer. Range: number of used transport blocks with size 6001..7000 bits

Data Source

NodeB

Source Field

pmUsedTbs64Qam

Source Section

HsDschResources

pmUsedTbs64Qam_07

Counting the number of used transport block size (TBS) with 64QAM. The number of successful HARQ transmissions are counted on the MAC-hs layer. Range: number of used transport blocks with size 7001..8000 bits

Data Source

NodeB

Source Field

pmUsedTbs64Qam

Source Section

HsDschResources

pmUsedTbs64Qam_08

Counting the number of used transport block size (TBS) with 64QAM. The number of successful HARQ transmissions are counted on the MAC-hs layer. Range: number of used transport blocks with size 8001..9000 bits

Data Source

NodeB

Source Field

pmUsedTbs64Qam

Source Section

HsDschResources

pmUsedTbs64Qam_09

Counting the number of used transport block size (TBS) with 64QAM. The number of successful HARQ transmissions are counted on the MAC-hs layer. Range: number of used transport blocks with size 9001..10000 bits

Data Source

NodeB

Source Field

pmUsedTbs64Qam

Source Section

HsDschResources

pmUsedTbs64Qam_10

Counting the number of used transport block size (TBS) with 64QAM. The number of successful HARQ transmissions are counted on the MAC-hs layer. Range: number of used transport blocks with size 10001..11000 bits

Data Source

NodeB

Source Field

pmUsedTbs64Qam

Source Section

HsDschResources

pmUsedTbs64Qam_11

Counting the number of used transport block size (TBS) with 64QAM. The number of successful HARQ transmissions are counted on the MAC-hs layer. Range: number of used transport blocks with size 11001..12000 bits

Data Source

NodeB

Source Field

pmUsedTbs64Qam

Source Section

HsDschResources

pmUsedTbs64Qam_12

Counting the number of used transport block size (TBS) with 64QAM. The number of successful HARQ transmissions are counted on the MAC-hs layer. Range: number of used transport blocks with size 12001..13000 bits

Data Source

NodeB

Source Field

pmUsedTbs64Qam

Source Section

HsDschResources

pmUsedTbs64Qam_13

Counting the number of used transport block size (TBS) with 64QAM. The number of successful HARQ transmissions are counted on the MAC-hs layer. Range: number of used transport blocks with size 13001..14000 bits

Data Source

NodeB

Source Field

pmUsedTbs64Qam

Source Section

HsDschResources

pmUsedTbs64Qam_14

Counting the number of used transport block size (TBS) with 64QAM. The number of successful HARQ transmissions are counted on the MAC-hs layer. Range: number of used transport blocks with size 14001..15000 bits

Data Source

NodeB

Source Field

pmUsedTbs64Qam

Source Section

HsDschResources

pmUsedTbs64Qam_15

Counting the number of used transport block size (TBS) with 64QAM. The number of successful HARQ transmissions are counted on the MAC-hs layer. Range: number of used transport blocks with size 15001..16000 bits

Data Source

NodeB

Source Field

pmUsedTbs64Qam

Source Section

HsDschResources

pmUsedTbs64Qam_16

Counting the number of used transport block size (TBS) with 64QAM. The number of successful HARQ transmissions are counted on the MAC-hs layer. Range: number of used transport blocks with size 16001..17000 bits

Data Source

NodeB

Source Field

pmUsedTbs64Qam

Source Section

HsDschResources

pmUsedTbs64Qam_17

Counting the number of used transport block size (TBS) with 64QAM. The number of successful HARQ transmissions are counted on the MAC-hs layer. Range: number of used transport blocks with size 17001..19000 bits

Data Source

NodeB

Source Field

pmUsedTbs64Qam

Source Section

HsDschResources

pmUsedTbs64Qam_18

Counting the number of used transport block size (TBS) with 64QAM. The number of successful HARQ transmissions are counted on the MAC-hs layer. Range: number of used transport blocks with size 19001..21000 bits

Data Source

NodeB

Source Field

pmUsedTbs64Qam

Source Section

HsDschResources

pmUsedTbs64Qam_19

Counting the number of used transport block size (TBS) with 64QAM. The number of successful HARQ transmissions are counted on the MAC-hs layer. Range: number of used transport blocks with size 21001..23000 bits

Data Source

NodeB

Source Field

pmUsedTbs64Qam

Source Section

HsDschResources

pmUsedTbs64Qam_20

Counting the number of used transport block size (TBS) with 64QAM. The number of successful HARQ transmissions are counted on the MAC-hs layer. Range: number of used transport blocks with size 23001..25000 bits

Data Source

NodeB

Source Field

pmUsedTbs64Qam

Source Section

HsDschResources

pmUsedTbs64Qam_21

Counting the number of used transport block size (TBS) with 64QAM. The number of successful HARQ transmissions are counted on the MAC-hs layer. Range: number of used transport blocks with size 25001..27000 bits

Data Source

NodeB

Source Field

pmUsedTbs64Qam

Source Section

HsDschResources

pmUsedTbs64Qam_22

Counting the number of used transport block size (TBS) with 64QAM. The number of successful HARQ transmissions are counted on the MAC-hs layer. Range: number of used transport blocks with size 27001..29000 bits

Data Source

NodeB

Source Field

pmUsedTbs64Qam

Source Section

HsDschResources

pmUsedTbs64Qam_23

Counting the number of used transport block size (TBS) with 64QAM. The number of successful HARQ transmissions are counted on the MAC-hs layer. Range: number of used transport blocks with size 29001..31000 bits

Data Source

NodeB

Source Field

pmUsedTbs64Qam

Source Section

HsDschResources

pmUsedTbs64Qam_24

Counting the number of used transport block size (TBS) with 64QAM. The number of successful HARQ transmissions are counted on the MAC-hs layer. Range: number of used transport blocks with size 31001..33000 bits

Data Source

NodeB

Source Field

pmUsedTbs64Qam

Source Section

HsDschResources

pmUsedTbs64Qam_25

Counting the number of used transport block size (TBS) with 64QAM. The number of successful HARQ transmissions are counted on the MAC-hs layer. Range: number of used transport blocks with size 33001..35000 bits

Data Source

NodeB

Source Field

pmUsedTbs64Qam

Source Section

HsDschResources

pmUsedTbs64Qam_26

Counting the number of used transport block size (TBS) with 64QAM. The number of successful HARQ transmissions are counted on the MAC-hs layer. Range: number of used transport blocks with size 35001..37000 bits

Data Source

NodeB

Source Field

pmUsedTbs64Qam

Source Section

HsDschResources

pmUsedTbs64Qam_27

Counting the number of used transport block size (TBS) with 64QAM. The number of successful HARQ transmissions are counted on the MAC-hs layer. Range: number of used transport blocks with size 37001..37000 bits

Data Source

NodeB

Source Field

pmUsedTbs64Qam

Source Section

HsDschResources

pmUsedTbs64Qam_28

Counting the number of used transport block size (TBS) with 64QAM. The number of successful HARQ transmissions are counted on the MAC-hs layer. Range: number of used transport blocks with size 39001..41000 bits

Data Source

NodeB

Source Field

pmUsedTbs64Qam

Source Section

HsDschResources

pmUsedTbs64Qam_29

Counting the number of used transport block size (TBS) with 64QAM. The number of successful HARQ transmissions are counted on the MAC-hs layer. Range: number of used transport blocks with size 41001..43000 bits

Data Source

NodeB

Source Field

pmUsedTbs64Qam

Source Section

HsDschResources

pmUsedTbsQpsk_01

Number of used transport block size with QPSK. A transport block is a HARQ data block (MAC-hs PDU). The number of HARQ transmissions and retransmissions on the MAC-hs layer are counted.

Data Source

NodeB

Source Field

pmUsedTbsQpsk

Source Section

HsDschResources

pmUsedTbsQpsk_02

Number of used transport block size with QPSK. A transport block is a HARQ data block (MAC-hs PDU). The number of HARQ transmissions and retransmissions on the MAC-hs layer are counted.

Data Source

NodeB

Source Field

pmUsedTbsQpsk

Source Section

HsDschResources

pmUsedTbsQpsk_03

Number of used transport block size with QPSK. A transport block is a HARQ data block (MAC-hs PDU). The number of HARQ transmissions and retransmissions on the MAC-hs layer are counted.

Data Source

NodeB

Source Field

pmUsedTbsQpsk

Source Section

HsDschResources

pmUsedTbsQpsk_04

Number of used transport block size with QPSK. A transport block is a HARQ data block (MAC-hs PDU). The number of HARQ transmissions and retransmissions on the MAC-hs layer are counted.

Data Source

NodeB

Source Field

pmUsedTbsQpsk

Source Section

HsDschResources

pmUsedTbsQpsk_05

Number of used transport block size with QPSK. A transport block is a HARQ data block (MAC-hs PDU). The number of HARQ transmissions and retransmissions on the MAC-hs layer are counted.

Data Source

NodeB

Source Field

pmUsedTbsQpsk

Source Section

HsDschResources

pmUsedTbsQpsk_06

Number of used transport block size with QPSK. A transport block is a HARQ data block (MAC-hs PDU). The number of HARQ transmissions and retransmissions on the MAC-hs layer are counted.

Data Source

NodeB

Source Field

pmUsedTbsQpsk

Source Section

HsDschResources

pmUsedTbsQpsk_07

Number of used transport block size with QPSK. A transport block is a HARQ data block (MAC-hs PDU). The number of HARQ transmissions and retransmissions on the MAC-hs layer are counted.

Data Source

NodeB

Source Field

pmUsedTbsQpsk

Source Section

HsDschResources

pmUsedTbsQpsk_08

Number of used transport block size with QPSK. A transport block is a HARQ data block (MAC-hs PDU). The number of HARQ transmissions and retransmissions on the MAC-hs layer are counted.

Data Source

NodeB

Source Field

pmUsedTbsQpsk

Source Section

HsDschResources

pmUsedTbsQpsk_09

Number of used transport block size with QPSK. A transport block is a HARQ data block (MAC-hs PDU). The number of HARQ transmissions and retransmissions on the MAC-hs layer are counted.

Data Source

NodeB

Source Field

pmUsedTbsQpsk

Source Section

HsDschResources

pmUsedTbsQpsk_10

Number of used transport block size with QPSK. A transport block is a HARQ data block (MAC-hs PDU). The number of HARQ transmissions and retransmissions on the MAC-hs layer are counted.

Data Source

NodeB

Source Field

pmUsedTbsQpsk

Source Section

HsDschResources

pmUsedTbsQpsk_11

Number of used transport block size with QPSK. A transport block is a HARQ data block (MAC-hs PDU). The number of HARQ transmissions and retransmissions on the MAC-hs layer are counted.

Data Source

NodeB

Source Field

pmUsedTbsQpsk

Source Section

HsDschResources

pmUsedTbsQpsk_12

Number of used transport block size with QPSK. A transport block is a HARQ data block (MAC-hs PDU). The number of HARQ transmissions and retransmissions on the MAC-hs layer are counted.

Data Source

NodeB

Source Field

pmUsedTbsQpsk

Source Section

HsDschResources

pmUsedTbsQpsk_13

Number of used transport block size with QPSK. A transport block is a HARQ data block (MAC-hs PDU). The number of HARQ transmissions and retransmissions on the MAC-hs layer are counted.

Data Source

NodeB

Source Field

pmUsedTbsQpsk

Source Section

HsDschResources

pmUsedTbsQpsk_14

Number of used transport block size with QPSK. A transport block is a HARQ data block (MAC-hs PDU). The number of HARQ transmissions and retransmissions on the MAC-hs layer are counted.

Data Source

NodeB

Source Field

pmUsedTbsQpsk

Source Section

HsDschResources

pmUsedTbsQpsk_15

Number of used transport block size with QPSK. A transport block is a HARQ data block (MAC-hs PDU). The number of HARQ transmissions and retransmissions on the MAC-hs layer are counted.

Data Source

NodeB

Source Field

pmUsedTbsQpsk

Source Section

HsDschResources

pmUsedTbsQpsk_16

Number of used transport block size with QPSK. A transport block is a HARQ data block (MAC-hs PDU). The number of HARQ transmissions and retransmissions on the MAC-hs layer are counted.

Data Source

NodeB

Source Field

pmUsedTbsQpsk

Source Section

HsDschResources

pmUsedTbsQpsk_17

Number of used transport block size with QPSK. A transport block is a HARQ data block (MAC-hs PDU). The number of HARQ transmissions and retransmissions on the MAC-hs layer are counted.

Data Source

NodeB

Source Field

pmUsedTbsQpsk

Source Section

HsDschResources

pmUsedTbsQpsk_18

Number of used transport block size with QPSK. A transport block is a HARQ data block (MAC-hs PDU). The number of HARQ transmissions and retransmissions on the MAC-hs layer are counted.

Data Source

NodeB

Source Field

pmUsedTbsQpsk

Source Section

HsDschResources

pmUsedTbsQpsk_19

Number of used transport block size with QPSK. A transport block is a HARQ data block (MAC-hs PDU). The number of HARQ transmissions and retransmissions on the MAC-hs layer are counted.

Data Source

NodeB

Source Field

pmUsedTbsQpsk

Source Section

HsDschResources

pmUsedTbsQpsk_20

Number of used transport block size with QPSK. A transport block is a HARQ data block (MAC-hs PDU). The number of HARQ transmissions and retransmissions on the MAC-hs layer are counted.

Data Source

NodeB

Source Field

pmUsedTbsQpsk

Source Section

HsDschResources

pmUsedTbsQpsk_21

Number of used transport block size with QPSK. A transport block is a HARQ data block (MAC-hs PDU). The number of HARQ transmissions and retransmissions on the MAC-hs layer are counted.

Data Source

NodeB

Source Field

pmUsedTbsQpsk

Source Section

HsDschResources

pmUsedTbsQpsk_22

Number of used transport block size with QPSK. A transport block is a HARQ data block (MAC-hs PDU). The number of HARQ transmissions and retransmissions on the MAC-hs layer are counted.

Data Source

NodeB

Source Field

pmUsedTbsQpsk

Source Section

HsDschResources

pmUsedTbsQpsk_23

Number of used transport block size with QPSK. A transport block is a HARQ data block (MAC-hs PDU). The number of HARQ transmissions and retransmissions on the MAC-hs layer are counted.

Data Source

NodeB

Source Field

pmUsedTbsQpsk

Source Section

HsDschResources

pmUsedTbsQpsk_24

Number of used transport block size with QPSK. A transport block is a HARQ data block (MAC-hs PDU). The number of HARQ transmissions and retransmissions on the MAC-hs layer are counted.

Data Source

NodeB

Source Field

pmUsedTbsQpsk

Source Section

HsDschResources

pmUsedTbsQpsk_25

Number of used transport block size with QPSK. A transport block is a HARQ data block (MAC-hs PDU). The number of HARQ transmissions and retransmissions on the MAC-hs layer are counted.

Data Source

NodeB

Source Field

pmUsedTbsQpsk

Source Section

HsDschResources

pmUsedTbsQpsk_26

Number of used transport block size with QPSK. A transport block is a HARQ data block (MAC-hs PDU). The number of HARQ transmissions and retransmissions on the MAC-hs layer are counted.

Data Source

NodeB

Source Field

pmUsedTbsQpsk

Source Section

HsDschResources

pmUsedTbsQpsk_27

Number of used transport block size with QPSK. A transport block is a HARQ data block (MAC-hs PDU). The number of HARQ transmissions and retransmissions on the MAC-hs layer are counted.

Data Source

NodeB

Source Field

pmUsedTbsQpsk

Source Section

HsDschResources

pmUsedTbsQpsk_28

Number of used transport block size with QPSK. A transport block is a HARQ data block (MAC-hs PDU). The number of HARQ transmissions and retransmissions on the MAC-hs layer are counted.

Data Source

NodeB

Source Field

pmUsedTbsQpsk

Source Section

HsDschResources

pmUsedTbsQpsk_29

Number of used transport block size with QPSK. A transport block is a HARQ data block (MAC-hs PDU). The number of HARQ transmissions and retransmissions on the MAC-hs layer are counted.

Data Source

NodeB

Source Field

pmUsedTbsQpsk

Source Section

HsDschResources

pmUsedTbsQpsk_30

Number of used transport block size with QPSK. A transport block is a HARQ data block (MAC-hs PDU). The number of HARQ transmissions and retransmissions on the MAC-hs layer are counted.

Data Source

NodeB

Source Field

pmUsedTbsQpsk

Source Section

HsDschResources

ImaGroup_NodeB Primitive Calculations

The following is a list of primitive calculations for the ImaGroup_NodeB entity.

GRAPHmultiLineSeparator

Special Control Field for Multi-Line Graphs

Calculation

```
""
```

NUMDAYS

of days in Report

Calculation

```
DAYSINREPORT()
```

NUMHOURS

of hours in Summation Data

Calculation

ImaGroup_NodeB Peg Counts

The following is a list of peg counts for the ImaGroup_NodeB entity.

pmGrFc

The total number of local end group failure condition entrances.

Data Source

NodeB_RXI

Source Field

pmGrFc

Source Section

ImaGroup

pmGrFcFe

The total number of far end group failure condition entrances.

Data Source

NodeB_RXI

Source Field

pmGrFcFe

Source Section

ImaGroup

pmGrUasIma

The total number of one second intervals, where the Group Traffic State Machine (GTSM) is down.

Data Source

NodeB_RXI

Source Field

pmGrUasIma

Source Section

ImaGroup

ImaGroup_RNC Primitive Calculations

The following is a list of primitive calculations for the ImaGroup_RNC entity.

GRAPHmultiLineSeparator

Special Control Field for Multi-Line Graphs

Calculation

```
""
```

NUMDAYS

of days in Report

Calculation

```
DAYSINREPORT()
```

NUMHOURS

of hours in Summation Data

Calculation

ImaGroup_RNC Peg Counts

The following is a list of peg counts for the ImaGroup_RNC entity.

pmGrFc

The total number of local end group failure condition entrances.

Data Source

RNC_RXI

Source Field

pmGrFc

Source Section

ImaGroup

pmGrFcFe

The total number of far end group failure condition entrances.

Data Source

RNC_RXI

Source Field

pmGrFcFe

Source Section

ImaGroup

pmGrUasIma

The total number of one second intervals, where the Group Traffic State Machine (GTSM) is down.

Data Source

RNC_RXI

Source Field

pmGrUasIma

Source Section

ImaGroup

ImaLink_NodeB Primitive Calculations

The following is a list of primitive calculations for the ImaLink_NodeB entity.

GRAPHmultiLineSeparator

Special Control Field for Multi-Line Graphs

Calculation

""

NUMDAYS

of days in Report

Calculation

```
DAYSINREPORT()
```

NUMHOURS

of hours in Summation Data

Calculation

ImaLink_NodeB Peg Counts

The following is a list of peg counts for the ImaLink_NodeB entity.

pmIvIma

The total number of IMA Control Protocol (ICP) Violations.

Data Source

NodeB_RXI

Source Field

pmIvIma

Source Section

ImaLink

pmOifIma

The total number of Out of IMA Frame (OIF) anomalies.

Data Source

NodeB_RXI

Source Field

pmOifIma

Source Section

ImaLink

pmRxFc

The total number of local end Rx link failures.

Data Source

NodeB_RXI

Source Field

pmRxFc

Source Section

ImaLink

pmRxFcFe

The total number of far end Rx link failures.

Data Source

NodeB_RXI

Source Field

pmRxFcFe

Source Section

ImaLink

pmRxStuffIma

The total number of stuff events inserted in the receive direction, except during SES-IMA or UAS-IMA conditions.

Data Source

NodeB_RXI

Source Field

pmRxStuffIma

Source Section

ImaLink

pmRxUusIma

The total number of Rx Unusable Seconds.

Data Source

NodeB_RXI

Source Field

pmRxUusIma

Source Section

ImaLink

pmRxUusImaFe

The total number of Rx Unusuable Seconds indications from the Rx far end LSM.

Data Source

NodeB_RXI

Source Field

pmRxUusImaFe

Source Section

ImaLink

pmSesIma

The total number of one second intervals containing 30% of the ICP cells counted as IV-IMAs or one or more link defects, Loss of IMA Frame (LIF) or Link Out of Delay Synchronization (LODS) defects, except during UAS-IMA conditions.

Data Source

NodeB_RXI

Source Field

pmSesIma

Source Section

ImaLink

pmSesImaFe

The total number of one second intervals containing one or more Remote Defect Indicator for IMA (RDI-IMA) defects, except during Unavailable Seconds for IMA at far end (UAS-IMA-FE) conditions.

Data Source

NodeB_RXI

Source Field

pmSesImaFe

Source Section

ImaLink

pmTxFc

The total number of local end Tx link failures.

Data Source

NodeB_RXI

Source Field

pmTxFc

Source Section

ImaLink

pmTxFcFe

The total number of far end Tx link failures.

Data Source

NodeB_RXI

Source Field

pmTxFcFe

Source Section

ImaLink

pmTxStuffIma

The total number of stuff events inserted in the transmit direction.

Data Source

NodeB_RXI

Source Field

pmTxStuffIma

Source Section

ImaLink

pmTxUusIma

The total number of Tx Unusable Seconds .

Data Source

NodeB_RXI

Source Field

pmTxUusIma

Source Section

ImaLink

pmTxUusImaFe

The total number of Tx Unusuable Second indications from the Tx far end LSM.

Data Source

NodeB_RXI

Source Field

pmTxUusImaFe

Source Section

ImaLink

pmUasIma

The total number of Unavailable Seconds at local end.

Data Source

NodeB_RXI

Source Field

pmUasIma

Source Section

ImaLink

pmUasImaFe

The total number of Unavailable Seconds at far end.

Data Source

NodeB_RXI

Source Field

pmUasImaFe

Source Section

ImaLink

ImaLink_RNC Primitive Calculations

The following is a list of primitive calculations for the ImaLink_RNC entity.

GRAPHmultiLineSeparator

Special Control Field for Multi-Line Graphs

Calculation

```
""
```

NUMDAYS

of days in Report

Calculation

```
DAYSINREPORT()
```

NUMHOURS

of hours in Summation Data

Calculation

ImaLink_RNC Peg Counts

The following is a list of peg counts for the ImaLink_RNC entity.

pmIvIma

The total number of IMA Control Protocol (ICP) Violations.

Data Source

RNC_RXI

Source Field

pmIvIma

Source Section

ImaLink

pmOifIma

The total number of Out of IMA Frame (OIF) anomalies.

Data Source

RNC_RXI

Source Field

pmOifIma

Source Section

ImaLink

pmRxFc

The total number of local end Rx link failures.

Data Source

RNC_RXI

Source Field

pmRxFc

Source Section

ImaLink

pmRxFcFe

The total number of far end Rx link failures.

Data Source

RNC_RXI

Source Field

pmRxFcFe

Source Section

ImaLink

pmRxStuffIma

The total number of stuff events inserted in the receive direction, except during SES-IMA or UAS-IMA conditions.

Data Source

RNC_RXI

Source Field

pmRxStuffIma

Source Section

ImaLink

pmRxUusIma

The total number of Rx Unusable Seconds.

Data Source

RNC_RXI

Source Field

pmRxUusIma

Source Section

ImaLink

pmRxUusImaFe

The total number of Rx Unusuable Seconds indications from the Rx far end LSM.

Data Source

RNC_RXI

Source Field

pmRxUusImaFe

Source Section

ImaLink

pmSesIma

The total number of one second intervals containing 30% of the ICP cells counted as IV-IMAs or one or more link defects, Loss of IMA Frame (LIF) or Link Out of Delay Synchronization (LODS) defects, except during UAS-IMA conditions.

Data Source

RNC_RXI

Source Field

pmSesIma

Source Section

ImaLink

pmSesImaFe

The total number of one second intervals containing one or more Remote Defect Indicator for IMA (RDI-IMA) defects, except during Unavailable Seconds for IMA at far end (UAS-IMA-FE) conditions.

Data Source

RNC_RXI

Source Field

pmSesImaFe

Source Section

ImaLink

pmTxFc

The total number of local end Tx link failures.

Data Source

RNC_RXI

Source Field

pmTxFc

Source Section

ImaLink

pmTxFcFe

The total number of far end Tx link failures.

Data Source

RNC_RXI

Source Field

pmTxFcFe

Source Section

ImaLink

pmTxStuffIma

The total number of stuff events inserted in the transmit direction.

Data Source

RNC_RXI

Source Field

pmTxStuffIma

Source Section

ImaLink

pmTxUusIma

The total number of Tx Unusable Seconds .

Data Source

RNC_RXI

Source Field

pmTxUusIma

Source Section

ImaLink

pmTxUusImaFe

The total number of Tx Unusuable Second indications from the Tx far end LSM.

Data Source

RNC_RXI

Source Field

pmTxUusImaFe

Source Section

ImaLink

pmUasIma

The total number of Unavailable Seconds at local end.

Data Source

RNC_RXI

Source Field

pmUasIma

Source Section

ImaLink

pmUasImaFe

The total number of Unavailable Seconds at far end.

Data Source

RNC_RXI

Source Field

pmUasImaFe

Source Section

ImaLink

ImBasicMessage Primitive Calculations

The following is a list of primitive calculations for the ImBasicMessage entity.

GRAPHmultiLineSeparator

Special Control Field for Multi-Line Graphs

Calculation

```
""
```

NUMDAYS

of days in Report

Calculation

```
DAYSINREPORT()
```

NUMHOURS

of hours in Summation Data

Calculation

p_IM_basic_message_success

IM basic message success rate Healthy value:99 - 100%

Calculation

```
(pmCallAttempts / (vsum(pmCallAttempts , pmFailedCallAttempts))) * 100.0
```

ImBasicMessage Peg Counts

The following is a list of peg counts for the ImBasicMessage entity.

PERLENSEC

Period length in seconds

Data Source

RNC_RXI

Source Field

PERLENSEC

Source Section

ImBasicMessage_Gen

pmCallAttempts

The total number of successful invocations of this message.

Data Source

RNC_RXI

Source Field

pmCallAttempts

Source Section

ImBasicMessage

pmFailedCallAttempts

The total number of unsuccessful invocations of this message.

Data Source

RNC_RXI

Source Field

pmFailedCallAttempts

Source Section

ImBasicMessage

RNC_RELEASE

Release

Data Source

RNC_RXI

Source Field

RNC_RELEASE

Source Section

ImBasicMessage_Gen

ImDeviceService Primitive Calculations

The following is a list of primitive calculations for the ImDeviceService entity.

GRAPHmultiLineSeparator

Special Control Field for Multi-Line Graphs

Calculation

```
""
```

NUMDAYS

of days in Report

Calculation

```
DAYSINREPORT()
```

NUMHOURS

of hours in Summation Data

Calculation

p_Seizures_Sucess_Rate

Percentege of Seizures which are sucessful

Calculation

```
100.0 * vsum( pmTotalSeizures, -1 * pmUnsuccSeizures ) / pmTotalSeizures
```

ImDeviceService Peg Counts

The following is a list of peg counts for the ImDeviceService entity.

PERLENSEC

Period length in seconds

Data Source

RNC_RXI

Source Field

PERLENSEC

Source Section

ImDeviceService_Gen

RNC_RELEASE

Release

Data Source

RNC_RXI

Source Field

RNC_RELEASE

ImMessageComposition Primitive Calculations

The following is a list of primitive calculations for the ImMessageComposition entity.

GRAPHmultiLineSeparator

Special Control Field for Multi-Line Graphs

Calculation

```
""
```

NUMDAYS

of days in Report

Calculation

```
DAYSINREPORT()
```

NUMHOURS

of hours in Summation Data

Calculation

p_IM_basic_message_success

IM basic message success rate Healthy value:99 - 100%

Calculation

```
(pmCallAttempts / (vsum(pmCallAttempts , pmFailedCallAttempts))) * 100.0
```

ImMessageComposition Peg Counts

The following is a list of peg counts for the ImMessageComposition entity.

PERLENSEC

Period length in seconds

Data Source

RNC_RXI

Source Field

PERLENSEC

Source Section

ImMessageComposition_Gen

pmCallAttempts

The total number of successful invocations of this message.

Data Source

RNC_RXI

Source Field

pmCallAttempts

Source Section

ImMessageComposition

pmFailedCallAttempts

The total number of unsuccessful invocations of this message.

Data Source

RNC_RXI

Source Field

pmFailedCallAttempts

Source Section

ImMessageComposition

RNC_RELEASE

Release

Data Source

RNC_RXI

Source Field

RNC_RELEASE

ImService Primitive Calculations

The following is a list of primitive calculations for the ImService entity.

GRAPHmultiLineSeparator

Special Control Field for Multi-Line Graphs

Calculation

```
""
```

NUMDAYS

of days in Report

Calculation

```
DAYSINREPORT()
```

NUMHOURS

of hours in Summation Data

Calculation

p_Seizures_Sucess_Rate

Percentege of Seizures which are sucessful

Calculation

```
100.0 * vsum( pmTotalSeizures, -1 * pmUnsuccSeizures ) / pmTotalSeizures
```

ImService Peg Counts

The following is a list of peg counts for the ImService entity.

PERLENSEC

Period length in seconds

Data Source

RNC_RXI

Source Field

PERLENSEC

Source Section

ImService_Gen

pmForcedRelease

The total number of forced device releases.

Data Source

RNC_RXI

Source Field

pmForcedRelease

Source Section

ImService

pmNormalRelease

The total number of normal device releases.

Data Source

RNC_RXI

Source Field

pmNormalRelease

Source Section

ImService

pmTotalSeizures

The total number of seizure attempt of devices from this device Service.

Data Source

RNC_RXI

Source Field

pmTotalSeizures

Source Section

ImService

pmUnsuccSeizures

The total number of failed seizure attempts due to congestion.

Data Source

RNC_RXI

Source Field

pmUnsuccSeizures

Source Section

ImService

RNC_RELEASE

Release

Data Source

RNC_RXI

Source Field

RNC_RELEASE

ImVariableMessage Primitive Calculations

The following is a list of primitive calculations for the ImVariableMessage entity.

GRAPHmultiLineSeparator

Special Control Field for Multi-Line Graphs

Calculation

```
""
```

IM_basic_message_success_%

IM basic message success rate Healthy value:99 - 100%

Calculation

```
(pmCallAttempts / (vsum(pmCallAttempts , pmFailedCallAttempts))) * 100.0
```

NUMDAYS

of days in Report

Calculation

```
DAYSINREPORT()
```

NUMHOURS

of hours in Summation Data

Calculation

p_IM_basic_message_success

IM basic message success rate Healthy value:99 - 100%

Calculation

```
(pmCallAttempts / (vsum(pmCallAttempts , pmFailedCallAttempts))) * 100.0
```

ImVariableMessage Peg Counts

The following is a list of peg counts for the ImVariableMessage entity.

PERLENSEC

Period length in seconds

Data Source

RNC_RXI

Source Field

PERLENSEC

Source Section

ImVariableMessage_Gen

pmCallAttempts

The total number of successful invocations of this message.

Data Source

RNC_RXI

Source Field

pmCallAttempts

Source Section

ImVariableMessage

pmFailedCallAttempts

The total number of unsuccessful invocations of this message.

Data Source

RNC

Source Field

pmFailedCallAttempts

Source Section

ImVariableMessage

RNC_RELEASE

Release

Data Source

RNC_RXI

Source Field

RNC_RELEASE

InmarsatDeviceService Primitive Calculations

The following is a list of primitive calculations for the InmarsatDeviceService entity.

GRAPHmultiLineSeparator

Special Control Field for Multi-Line Graphs

Calculation

```
""
```

NUMDAYS

of days in Report

Calculation

```
DAYSINREPORT()
```

NUMHOURS

of hours in Summation Data

Calculation

p_Seizures_Sucess_Rate

Percentege of Seizures which are sucessful

Calculation

```
100.0 * vsum( pmTotalSeizures, -1 * pmUnsuccSeizures ) / pmTotalSeizures
```

InmarsatDeviceService Peg Counts

The following is a list of peg counts for the InmarsatDeviceService entity.

PERLENSEC

Period length in seconds

Data Source

RNC_RXI

Source Field

PERLENSEC

Source Section

InmarsatDeviceService_Gen

pmForcedRelease

The total number of forced device releases.

Data Source

RNC_RXI

Source Field

pmForcedRelease

Source Section

InmarsatDeviceService

pmNormalRelease

The total number of normal device releases.

Data Source

RNC_RXI

Source Field

pmNormalRelease

Source Section

InmarsatDeviceService

pmTotalSeizures

The total number of seizure attempt of devices from this device Service.

Data Source

RNC_RXI

Source Field

pmTotalSeizures

Source Section

InmarsatDeviceService

pmUnsuccSeizures

The total number of failed seizure attempts due to congestion.

Data Source

RNC_RXI

Source Field

pmUnsuccSeizures

Source Section

InmarsatDeviceService

RNC_RELEASE

Release

Data Source

RNC_RXI

Source Field

RNC_RELEASE

IP_NodeB Primitive Calculations

The following is a list of primitive calculations for the IP_NodeB entity.

GRAPHmultiLineSeparator

Special Control Field for Multi-Line Graphs

Calculation

```
""
```

NUMDAYS

of days in Report

Calculation

```
DAYSINREPORT()
```

NUMHOURS

of hours in Summation Data

Calculation

IP_NodeB Peg Counts

The following is a list of peg counts for the IP_NodeB entity.

NodeB_RELEASE

Release

Data Source

NodeB_RNC_RXI

Source Section

Ip_NodeB

PERLENSEC

Period Length

Data Source

NodeB_RNC_RXI

Source Field

perlensec

Source Section

Ip_NodeB_WMGeneral

PERLENSEC_K

Period length in seconds aggregation summation in time domain and aggregation maximum between Network Elements.

Data Source

NodeB_RNC_RXI

Source Field

perlensec

Source Section

Ip_NodeB_WMGeneral

pmNoOfHdrErrors

Number of datagrams discarded due to format error.

Data Source

NodeB_RNC_RXI

Source Field

pmNoOfHdrErrors

Source Section

Ip_NodeB

pmNoOfIpAddrErrors

Number of datagrams discarded due to misdelivery.

Data Source

NodeB_RNC_RXI

Source Field

pmNoOfIpAddrErrors

Source Section

Ip_NodeB

pmNoOfIpFlowDatagrams

Number of datagrams forwarded.

Data Source

NodeB_RNC_RXI

Source Field

pmNoOfIpFlowDatagrams

Source Section

Ip_NodeB

pmNoOfIpInDiscards

Number of datagrams discarded due to resource limitations.

Data Source

NodeB_RNC_RXI

Source Field

pmNoOfIpInDiscards

Source Section

Ip_NodeB

pmNoOfIpInReceives

Total number of datagrams received.

Data Source

NodeB_RNC_RXI

Source Field

pmNoOfIpInReceives

Source Section

Ip_NodeB

pmNoOfIpOutDiscards

Number of datagrams discarded due to lack of resources.

Data Source

NodeB_RNC_RXI

Source Field

pmNoOfIpOutDiscards

Source Section

Ip_NodeB

pmNoOfIpReasmOKs

Number of datagrams successfully reassembled.

Data Source

NodeB_RNC_RXI

Source Field

pmNoOfIpReasmOKs

Source Section

Ip_NodeB

pmNoOfIpReasmReqds

Number of fragments received needing reassembly.

Data Source

NodeB_RNC_RXI

Source Field

pmNoOfIpReasmReqds

Source Section

Ip_NodeB

IP_RNC Primitive Calculations

The following is a list of primitive calculations for the IP_RNC entity.

GRAPHmultiLineSeparator

Special Control Field for Multi-Line Graphs

Calculation

```
""
```

NUMDAYS

of days in Report

Calculation

```
DAYSINREPORT()
```

Updated: 2009-07-22

NUMHOURS

of hours in Summation Data

Calculation

IP_RNC Peg Counts

The following is a list of peg counts for the IP_RNC entity.

PERLENSEC

Period Length

Data Source

NodeB_RNC_RXI

Source Field

perlensec

Source Section

Ip_RNC_WMGeneral

PERLENSEC_K

Period length in seconds aggregation summation in time domain and aggregation maximum between Network Elements.

Data Source

NodeB_RNC_RXI

Source Field

perlensec

Source Section

Ip_RNC_WMGeneral

pmNoOfHdrErrors

Number of datagrams discarded due to format error.

Data Source

NodeB_RNC_RXI

Source Field

pmNoOfHdrErrors

Source Section

Ip_RNC

pmNoOfIpAddrErrors

Number of datagrams discarded due to misdelivery.

Data Source

NodeB_RNC_RXI

Source Field

pmNoOfIpAddrErrors

Source Section

Ip_RNC

pmNoOfIpFlowDatagrams

Number of datagrams forwarded.

Data Source

NodeB_RNC_RXI

Source Field

pmNoOfIpFlowDatagrams

Source Section

Ip_RNC

pmNoOfIpInDiscards

Number of datagrams discarded due to resource limitations.

Data Source

NodeB_RNC_RXI

Source Field

pmNoOfIpInDiscards

Source Section

Ip_RNC

pmNoOfIpInReceives

Total number of datagrams received.

Data Source

NodeB_RNC_RXI

Source Field

pmNoOfIpInReceives

Source Section

Ip_RNC

pmNoOfIpOutDiscards

Number of datagrams discarded due to lack of resources.

Data Source

NodeB_RNC_RXI

Source Field

pmNoOfIpOutDiscards

Source Section

Ip_RNC

pmNoOfIpReasmOKs

Number of datagrams successfully reassembled.

Data Source

NodeB_RNC_RXI

Source Field

pmNoOfIpReasmOKs

Source Section

Ip_RNC

pmNoOfIpReasmReqds

Number of fragments received needing reassembly.

Data Source

NodeB_RNC_RXI

Source Field

pmNoOfIpReasmReqds

Source Section

Ip_RNC

RNC_RELEASE

Release

Data Source

NodeB_RNC_RXI

Source Section

Ip_RNC

IpAccessHostGpb_NodeB Primitive Calculations

The following is a list of primitive calculations for the IpAccessHostGpb_NodeB entity.

GRAPHmultiLineSeparator

Special Control Field for Multi-Line Graphs

Calculation

```
""
```

NUMDAYS

of days in Report

Calculation

```
DAYSINREPORT()
```

Updated: 2009-07-22

NUMHOURS

of hours in Summation Data

Calculation

p_Ratio_of_discarded_received_IP_datagrams

The ratio of discarded received IP datagrams (in %) Healthy value: 0-1 %

Calculation

```
(pmIpInDiscards / pmIpInReceives) * 100.0
```

p_Ratio_of_discarded_sent_IP_datagrams

The ratio of discarded sent IP datagrams (in %) Healthy value: 0-1 %

Calculation

```
(pmIpOutDiscards / pmIpOutRequests) * 100.0
```

Sent_IP_datagrams

The total number of sent IP datagrams

Calculation

```
pmIpOutRequests - pmIpOutDiscards
```

IpAccessHostGpb_NodeB Peg Counts

The following is a list of peg counts for the IpAccessHostGpb_NodeB entity.

pmIcmpInDestUnreachs

The total number of ICMP Destination Unreachable messages received.

Data Source

NodeB_RXI

Source Field

pmIcmpInDestUnreachs

Source Section

IpAccessHostGpb

pmIcmpInEchoReps

The total number of ICMP Echo Reply messages received.

Data Source

NodeB_RXI

Source Field

pmIcmpInEchoReps

Source Section

IpAccessHostGpb

pmIcmpInEchos

The total number of ICMP Echo (request) messages received.

Data Source

NodeB_RXI

Source Field

pmIcmpInEchos

Source Section

IpAccessHostGpb

pmIcmpInErrors

The total number of ICMP messages which the entity received but determined as having ICMP-specific errors.

Data Source

NodeB_RXI

Source Field

pmIcmpInErrors

Source Section

IpAccessHostGpb

pmIcmpInMsgs

The total number of ICMP messages which the entity received.

Data Source

NodeB_RXI

Source Field

pmIcmpInMsgs

Source Section

IpAccessHostGpb

pmIcmpInParamProbs

The total number of ICMP Parameter Problem messages received.

Data Source

NodeB_RXI

Source Field

pmIcmpInParamProbs

Source Section

IpAccessHostGpb

pmIcmpInRedirects

The total number of ICMP Redirect messages received.

Data Source

NodeB_RXI

Source Field

pmIcmpInRedirects

Source Section

IpAccessHostGpb

pmIcmpInSrcQuenchs

The total number of ICMP Source Quench messages received.

Data Source

NodeB_RXI

Source Field

pmIcmpInSrcQuenchs

Source Section

IpAccessHostGpb

pmIcmpInTimeExcds

The total number of ICMP Time Exceeded messages received.

Data Source

NodeB_RXI

Source Field

pmIcmpInTimeExcds

Source Section

IpAccessHostGpb

pmIcmpOutDestUnreachs

The total number of ICMP Destination Unreachable messages sent.

Data Source

NodeB_RXI

Source Field

pmIcmpOutDestUnreachs

Source Section

IpAccessHostGpb

pmIcmpOutEchoReps

The total number of ICMP Echo Reply messages sent.

Data Source

NodeB_RXI

Source Field

pmIcmpOutEchoReps

Source Section

IpAccessHostGpb

pmIcmpOutEchos

The total number of ICMP Echo (request) messages sent.

Data Source

NodeB_RXI

Source Field

pmIcmpOutEchos

Source Section

IpAccessHostGpb

pmIcmpOutErrors

The total number of ICMP messages which this entity did not send due to problems discovered within ICMP such as a lack of buffers.

Data Source

NodeB_RXI

Source Field

pmIcmpOutErrors

Source Section

IpAccessHostGpb

pmIcmpOutMsgs

The total number of ICMP messages which this entity attempted to send.

Data Source

NodeB_RXI

Source Field

pmIcmpOutMsgs

Source Section

IpAccessHostGpb

pmIcmpOutParamProbs

The total number of ICMP Parameter Problem messages sent.

Data Source

NodeB_RXI

Source Field

pmIcmpOutParamProbs

Source Section

IpAccessHostGpb

pmIpFragCreates

The total number of IP datagram fragments that have been generated as a result of fragmentation at this entity.

Data Source

NodeB_RXI

Source Field

pmIpFragCreates

Source Section

IpAccessHostGpb

pmIpFragFails

The total number of IP datagrams that have been discarded because they needed to be fragmented at this entity but could not be.

Data Source

NodeB_RXI

Source Field

pmIpFragFails

Source Section

IpAccessHostGpb

pmIpFragOKs

The total number of IP datagrams that have been successfully fragmented at this entity.

Data Source

NodeB_RXI

Source Field

pmIpFragOKs

Source Section

IpAccessHostGpb

pmIpInAddrErrors

The total number of input datagrams discarded because the IP address in their IP header's destination field was not a valid address to be received at this entity.

Data Source

NodeB_RXI

Source Field

pmIpInAddrErrors

Source Section

IpAccessHostGpb

pmIpInDelivers

The total number of input datagrams successfully delivered to IP user-protocols (including ICMP).

Data Source

NodeB_RXI

Source Field

pmIpInDelivers

Source Section

IpAccessHostGpb

pmIpInDiscards

The total number of input IP datagrams for which no problems were encountered to prevent their continued processing, but which were discarded.

Data Source

NodeB_RXI

Source Field

pmIpInDiscards

Source Section

IpAccessHostGpb

pmIpInHdrErrors

The total number of input datagrams discarded due to errors in their IP headers.

Data Source

NodeB_RXI

Source Field

pmIpInHdrErrors

Source Section

IpAccessHostGpb

pmIpInReceives

The total number of input datagrams received from interfaces.

Data Source

NodeB_RXI

Source Field

pmIpInReceives

Source Section

IpAccessHostGpb

pmIpInUnknownProtos

The total number of locally-addressed datagrams received successfully but discarded because of an unknown or unsupported protocol.

Data Source

NodeB_RXI

Source Field

pmIpInUnknownProtos

Source Section

IpAccessHostGpb

pmIpOutDiscards

The total number of output IP datagrams for which no problem was encountered to prevent their transmission to their destination, but which were discarded (for example, for lack of buffer space).

Data Source

NodeB_RXI

Source Field

pmIpOutDiscards

Source Section

IpAccessHostGpb

pmIpOutRequests

The total number of IP datagrams which local IP user-protocols (including ICMP) supplied to IP in requests for transmission.

Data Source

NodeB_RXI

Source Field

pmIpOutRequests

Source Section

IpAccessHostGpb

pmIpReasmFails

The total number of failures detected by the IP re-assembly algorithm (for whatever reason: timed out, errors, etc).

Data Source

NodeB_RXI

Source Field

pmIpReasmFails

Source Section

IpAccessHostGpb

pmIpReasmOKs

The total number of IP datagrams successfully re-assembled.

Data Source

NodeB_RXI

Source Field

pmIpReasmOKs

Source Section

IpAccessHostGpb

pmIpReasmReqds

The total number of IP fragments received which needed to be reassembled at this entity.

Data Source

NodeB_RXI

Source Field

pmIpReasmReqds

Source Section

IpAccessHostGpb

IpAccessHostGpb_RNC Primitive Calculations

The following is a list of primitive calculations for the IpAccessHostGpb_RNC entity.

GRAPHmultiLineSeparator

Special Control Field for Multi-Line Graphs

Calculation

```
""
```

NUMDAYS

of days in Report

Calculation

```
DAYSINREPORT()
```

NUMHOURS

of hours in Summation Data

Calculation

p_Ratio_of_discarded_received_IP_datagrams

The ratio of discarded received IP datagrams (in %) Healthy value: 0-1 %

Calculation

```
(pmIpInDiscards / pmIpInReceives) * 100.0
```

p_Ratio_of_discarded_sent_IP_datagrams

The ratio of discarded sent IP datagrams (in %) Healthy value: 0-1 %

Calculation

```
(pmIpOutDiscards / pmIpOutRequests) * 100.0
```

Sent_IP_datagrams

The total number of sent IP datagrams

Calculation

```
pmIpOutRequests - pmIpOutDiscards
```

IpAccessHostGpb_RNC Peg Counts

The following is a list of peg counts for the IpAccessHostGpb_RNC entity.

pmIcmpInDestUnreachs

The total number of ICMP Destination Unreachable messages received.

Data Source

RNC_RXI

Source Field

pmIcmpInDestUnreachs

Source Section

IpAccessHostGpb

pmIcmpInEchoReps

The total number of ICMP Echo Reply messages received.

Data Source

RNC_RXI

Source Field

pmIcmpInEchoReps

Source Section

IpAccessHostGpb

pmIcmpInEchos

The total number of ICMP Echo (request) messages received.

Data Source

RNC_RXI

Source Field

pmIcmpInEchos

Source Section

IpAccessHostGpb

pmIcmpInErrors

The total number of ICMP messages which the entity received but determined as having ICMP-specific errors.

Data Source

RNC_RXI

Source Field

pmIcmpInErrors

Source Section

IpAccessHostGpb

pmIcmpInMsgs

The total number of ICMP messages which the entity received.

Data Source

RNC_RXI

Source Field

pmIcmpInMsgs

Source Section

IpAccessHostGpb

pmIcmpInParamProbs

The total number of ICMP Parameter Problem messages received.

Data Source

RNC_RXI

Source Field

pmIcmpInParamProbs

Source Section

IpAccessHostGpb

pmIcmpInRedirects

The total number of ICMP Redirect messages received.

Data Source

RNC_RXI

Source Field

pmIcmpInRedirects

Source Section

IpAccessHostGpb

pmIcmpInSrcQuenchs

The total number of ICMP Source Quench messages received.

Data Source

RNC_RXI

Source Field

pmIcmpInSrcQuenchs

Source Section

IpAccessHostGpb

pmIcmpInTimeExcds

The total number of ICMP Time Exceeded messages received.

Data Source

RNC_RXI

Source Field

pmIcmpInTimeExcds

Source Section

IpAccessHostGpb

pmIcmpOutDestUnreachs

The total number of ICMP Destination Unreachable messages sent.

Data Source

RNC_RXI

Source Field

pmIcmpOutDestUnreachs

Source Section

IpAccessHostGpb

pmIcmpOutEchoReps

The total number of ICMP Echo Reply messages sent.

Data Source

RNC_RXI

Source Field

pmIcmpOutEchoReps

Source Section

IpAccessHostGpb

pmIcmpOutEchos

The total number of ICMP Echo (request) messages sent.

Data Source

RNC_RXI

Source Field

pmIcmpOutEchos

Source Section

IpAccessHostGpb

pmIcmpOutErrors

The total number of ICMP messages which this entity did not send due to problems discovered within ICMP such as a lack of buffers.

Data Source

RNC_RXI

Source Field

pmIcmpOutErrors

Source Section

IpAccessHostGpb

pmIcmpOutMsgs

The total number of ICMP messages which this entity attempted to send.

Data Source

RNC_RXI

Source Field

pmIcmpOutMsgs

Source Section

IpAccessHostGpb

pmIcmpOutParamProbs

The total number of ICMP Parameter Problem messages sent.

Data Source

RNC_RXI

Source Field

pmIcmpOutParamProbs

Source Section

IpAccessHostGpb

pmIpFragCreates

The total number of IP datagram fragments that have been generated as a result of fragmentation at this entity.

Data Source

RNC_RXI

Source Field

pmIpFragCreates

Source Section

IpAccessHostGpb

pmIpFragFails

The total number of IP datagrams that have been discarded because they needed to be fragmented at this entity but could not be.

Data Source

RNC_RXI

Source Field

pmIpFragFails

Source Section

IpAccessHostGpb

pmIpFragOKs

The total number of IP datagrams that have been successfully fragmented at this entity.

Data Source

RNC_RXI

Source Field

pmIpFragOKs

Source Section

IpAccessHostGpb

pmIpInAddrErrors

The total number of input datagrams discarded because the IP address in their IP header's destination field was not a valid address to be received at this entity.

Data Source

RNC_RXI

Source Field

pmIpInAddrErrors

Source Section

IpAccessHostGpb

pmIpInDelivers

The total number of input datagrams successfully delivered to IP user-protocols (including ICMP).

Data Source

RNC_RXI

Source Field

pmIpInDelivers

Source Section

IpAccessHostGpb

pmIpInDiscards

The total number of input IP datagrams for which no problems were encountered to prevent their continued processing, but which were discarded.

Data Source

RNC_RXI

Source Field

pmIpInDiscards

Source Section

IpAccessHostGpb

pmIpInHdrErrors

The total number of input datagrams discarded due to errors in their IP headers.

Data Source

RNC_RXI

Source Field

pmIpInHdrErrors

Source Section

IpAccessHostGpb

pmIpInReceives

The total number of input datagrams received from interfaces.

Data Source

RNC_RXI

Source Field

pmIpInReceives

Source Section

IpAccessHostGpb

pmIpInUnknownProtos

The total number of locally-addressed datagrams received successfully but discarded because of an unknown or unsupported protocol.

Data Source

RNC_RXI

Source Field

pmIpInUnknownProtos

Source Section

IpAccessHostGpb

pmIpOutDiscards

The total number of output IP datagrams for which no problem was encountered to prevent their transmission to their destination, but which were discarded (for example, for lack of buffer space).

Data Source

RNC_RXI

Source Field

pmIpOutDiscards

Source Section

IpAccessHostGpb

pmIpOutRequests

The total number of IP datagrams which local IP user-protocols (including ICMP) supplied to IP in requests for transmission.

Data Source

RNC_RXI

Source Field

pmIpOutRequests

Source Section

IpAccessHostGpb

pmIpReasmFails

The total number of failures detected by the IP re-assembly algorithm (for whatever reason: timed out, errors, etc).

Data Source

RNC_RXI

Source Field

pmIpReasmFails

Source Section

IpAccessHostGpb

pmIpReasmOKs

The total number of IP datagrams successfully re-assembled.

Data Source

RNC_RXI

Source Field

pmIpReasmOKs

Source Section

IpAccessHostGpb

pmIpReasmReqds

The total number of IP fragments received which needed to be reassembled at this entity.

Data Source

RNC_RXI

Source Field

pmIpReasmReqds

Source Section

IpAccessHostGpb

IpAccessHostMsb_NodeB Primitive Calculations

The following is a list of primitive calculations for the IpAccessHostMsb_NodeB entity.

GRAPHmultiLineSeparator

Special Control Field for Multi-Line Graphs

Calculation

```
""
```

NUMDAYS

of days in Report

Calculation

```
DAYSINREPORT()
```

Updated: 2009-07-22

NUMHOURS

of hours in Summation Data

Calculation

IpAccessHostMsb_NodeB Peg Counts

The following is a list of peg counts for the IpAccessHostMsb_NodeB entity.

pmIcmpInDestUnreachs

The total number of ICMP Destination Unreachable messages received.

Data Source

NodeB_RXI

Source Field

pmIcmpInDestUnreachs

Source Section

IpAccessHostMsb

pmIcmpInErrors

The total number of ICMP messages which the entity received but determined as having ICMP-specific errors.

Data Source

NodeB_RXI

Source Field

pmIcmpInErrors

Source Section

IpAccessHostMsb

pmIcmpInMsgs

The total number of ICMP messages which the entity received.

Data Source

NodeB_RXI

Source Field

pmIcmpInMsgs

Source Section

IpAccessHostMsb

pmIcmpOutDestUnreachs

The total number of ICMP Destination Unreachable messages sent.

Data Source

NodeB_RXI

Source Field

pmIcmpOutDestUnreachs

Source Section

IpAccessHostMsb

pmIcmpOutMsgs

The total number of ICMP messages which this entity attempted to send.

Data Source

NodeB_RXI

Source Field

pmIcmpOutMsgs

Source Section

IpAccessHostMsb

pmIpInAddrErrors

The total number of input datagrams discarded because the IP address in their IP header's destination field was not a valid address to be received at this entity.

Data Source

NodeB_RXI

Source Field

pmIpInAddrErrors

Source Section

IpAccessHostMsb

pmIpInDelivers

The total number of input datagrams successfully delivered to IP user-protocols (including ICMP).

Data Source

NodeB_RXI

Source Field

pmIpInDelivers

Source Section

IpAccessHostMsb

pmIpInHdrErrors

The total number of input datagrams discarded due to errors in their IP headers.

Data Source

NodeB_RXI

Source Field

pmIpInHdrErrors

Source Section

IpAccessHostMsb

pmIpInReceives

The total number of input datagrams received from interfaces.

Data Source

NodeB_RXI

Source Field

pmIpInReceives

Source Section

IpAccessHostMsb

pmIpInUnknownProtos

The total number of locally-addressed datagrams received successfully but discarded because of an unknown or unsupported protocol.

Data Source

NodeB_RXI

Source Field

pmIpInUnknownProtos

Source Section

IpAccessHostMsb

pmIpOutRequests

The total number of IP datagrams which local IP user-protocols (including ICMP) supplied to IP in requests for transmission.

Data Source

NodeB_RXI

Source Field

pmIpOutRequests

Source Section

IpAccessHostMsb

pmUdpInDatagrams

The total number of UDP datagrams delivered to UDP users.

Data Source

NodeB_RXI

Source Field

pmUdpInDatagrams

Source Section

IpAccessHostMsb

pmUdpInErrors

The total number of received UDP datagrams that could not be delivered for reasons other than the lack of an application at the destination port.

Data Source

NodeB_RXI

Source Field

pmUdpInErrors

Source Section

IpAccessHostMsb

pmUdpNoPorts

The total number of received UDP datagrams for which there was no application at the destination port.

Data Source

NodeB_RXI

Source Field

pmUdpNoPorts

Source Section

IpAccessHostMsb

pmUdpOutDatagrams

The total number of UDP datagrams sent from this entity.

Data Source

NodeB_RXI

Source Field

pmUdpOutDatagrams

Source Section

IpAccessHostMsb

IpAccessHostMsb_RNC Primitive Calculations

The following is a list of primitive calculations for the IpAccessHostMsb_RNC entity.

GRAPHmultiLineSeparator

Special Control Field for Multi-Line Graphs

Calculation

```
""
```

NUMDAYS

of days in Report

Calculation

```
DAYSINREPORT()
```

NUMHOURS

of hours in Summation Data

Calculation

IpAccessHostMsb_RNC Peg Counts

The following is a list of peg counts for the IpAccessHostMsb_RNC entity.

pmIcmpInDestUnreachs

The total number of ICMP Destination Unreachable messages received.

Data Source

RNC_RXI

Source Field

pmIcmpInDestUnreachs

Source Section

IpAccessHostMsb

pmIcmpInErrors

The total number of ICMP messages which the entity received but determined as having ICMP-specific errors.

Data Source

RNC_RXI

Source Field

pmIcmpInErrors

Source Section

IpAccessHostMsb

pmIcmpInMsgs

The total number of ICMP messages which the entity received.

Data Source

RNC_RXI

Source Field

pmIcmpInMsgs

Source Section

IpAccessHostMsb

pmIcmpOutDestUnreachs

The total number of ICMP Destination Unreachable messages sent.

Data Source

RNC_RXI

Source Field

pmIcmpOutDestUnreachs

Source Section

IpAccessHostMsb

pmIcmpOutMsgs

The total number of ICMP messages which this entity attempted to send.

Data Source

RNC_RXI

Source Field

pmIcmpOutMsgs

Source Section

IpAccessHostMsb

pmIpInAddrErrors

The total number of input datagrams discarded because the IP address in their IP header's destination field was not a valid address to be received at this entity.

Data Source

RNC_RXI

Source Field

pmIpInAddrErrors

Source Section

IpAccessHostMsb

pmIpInDelivers

The total number of input datagrams successfully delivered to IP user-protocols (including ICMP).

Data Source

RNC_RXI

Source Field

pmIpInDelivers

Source Section

IpAccessHostMsb

pmIpInHdrErrors

The total number of input datagrams discarded due to errors in their IP headers.

Data Source

RNC_RXI

Source Field

pmIpInHdrErrors

Source Section

IpAccessHostMsb

pmIpInReceives

The total number of input datagrams received from interfaces.

Data Source

RNC_RXI

Source Field

pmIpInReceives

Source Section

IpAccessHostMsb

pmIpInUnknownProtos

The total number of locally-addressed datagrams received successfully but discarded because of an unknown or unsupported protocol.

Data Source

RNC_RXI

Source Field

pmIpInUnknownProtos

Source Section

IpAccessHostMsb

pmIpOutRequests

The total number of IP datagrams which local IP user-protocols (including ICMP) supplied to IP in requests for transmission.

Data Source

RNC_RXI

Source Field

pmIpOutRequests

Source Section

IpAccessHostMsb

pmUdpInDatagrams

The total number of UDP datagrams delivered to UDP users.

Data Source

RNC_RXI

Source Field

pmUdpInDatagrams

Source Section

IpAccessHostMsb

pmUdpInErrors

The total number of received UDP datagrams that could not be delivered for reasons other than the lack of an application at the destination port.

Data Source

RNC_RXI

Source Field

pmUdpInErrors

Source Section

IpAccessHostMsb

pmUdpNoPorts

The total number of received UDP datagrams for which there was no application at the destination port.

Data Source

RNC_RXI

Source Field

pmUdpNoPorts

Source Section

IpAccessHostMsb

pmUdpOutDatagrams

The total number of UDP datagrams sent from this entity.

Data Source

RNC_RXI

Source Field

pmUdpOutDatagrams

Source Section

IpAccessHostMsb

IpAccessHostSpb_NodeB Primitive Calculations

The following is a list of primitive calculations for the IpAccessHostSpb_NodeB entity.

GRAPHmultiLineSeparator

Special Control Field for Multi-Line Graphs

Calculation

```
""
```

NUMDAYS

of days in Report

Calculation

```
DAYSINREPORT()
```

NUMHOURS

of hours in Summation Data

IpAccessHostSpb_NodeB Peg Counts

The following is a list of peg counts for the IpAccessHostSpb_NodeB entity.

PERLENSEC

Period length in seconds

Data Source

NodeB_RXI

Source Field

gp

Source Section

IpAccessHostSpb

PERLENSEC_K

Period length in seconds aggregation summation in time domain and aggregation maximum between Network Elements.

Data Source

NodeB_RXI

Source Field

gp

Source Section

IpAccessHostSpb

pmIcmpInDestUnreachs

The number of Internet Control Message Protocol (ICMP) Destination Unreachable messages received. For additonal information, refer to RFC 2011.

Data Source

NodeB_RXI

Source Field

pmIcmpInDestUnreachs

Source Section

IpAccessHostSpb

pmIcmpInEchoReps

The number of Internet Control Message Protocol (ICMP) Echo Reply messages received. For additonal information, refer to RFC 2011.

Data Source

NodeB_RXI

Source Field

pmIcmpInEchoReps

Source Section

IpAccessHostSpb

pmIcmpInEchos

The number of Internet Control Message Protocol (ICMP) Echo Request messages received. See RFC 2011.

Data Source

NodeB_RXI

Source Field

pmIcmpInEchos

Source Section

IpAccessHostSpb

pmIcmpInErrors

The number of Internet Control Message Protocol (ICMP) messages that the entity received but determined as having ICMP-specific errors (bad ICMP checksums, bad length, etc.). For additonal information, refer to RFC 2011.

Data Source

NodeB_RXI

Source Field

pmIcmpInErrors

Source Section

IpAccessHostSpb

pmIcmpInMsgs

The total number of Internet Control Message Protocol (ICMP) messages that the entity received. Note that this counter includes all those counted by icmpInErrors. For additonal information, refer to RFC 2011.

Data Source

NodeB_RXI

Source Field

pmIcmpInMsgs

Source Section

IpAccessHostSpb

pmIcmpInParamProbs

The number of Internet Control Message Protocol (ICMP) Parameter Problem messages received.

Data Source

NodeB_RXI

Source Field

pmIcmpInParamProbs

Source Section

IpAccessHostSpb

pmIcmpInRedirects

The number of Internet Control Message Protocol (ICMP) Redirect messages received

Data Source

NodeB_RXI

Source Field

pmIcmpInRedirects

Source Section

IpAccessHostSpb

pmIcmpInSrcQuenchs

The number of Internet Control Message Protocol (ICMP) Source Quench messages received.

Data Source

NodeB_RXI

Source Field

pmIcmpInSrcQuenchs

Source Section

IpAccessHostSpb

pmIcmpInTimeExcds

The number of Internet Control Message Protocol (ICMP) Time Exceeded messages received.

Data Source

NodeB_RXI

Source Field

pmIcmpInTimeExcds

Source Section

IpAccessHostSpb

pmIcmpOutDestUnreachs

The number of Internet Control Message Protocol (ICMP) Destination Unreachable messages sent. For additonal information, refer to RFC 2011.

Data Source

NodeB_RXI

Source Field

pmIcmpOutDestUnreachs

Source Section

IpAccessHostSpb

pmIcmpOutEchoReps

The number of Internet Control Message Protocol (ICMP) Echo Reply messages sent

Data Source

NodeB_RXI

Source Field

pmIcmpOutEchoReps

Source Section

IpAccessHostSpb

pmIcmpOutEchos

The number of Internet Control Message Protocol (ICMP) Echo Request messages sent.

Data Source

NodeB_RXI

Source Field

pmIcmpOutEchos

Source Section

IpAccessHostSpb

pmIcmpOutErrors

The number of Internet Control Message Protocol (ICMP) messages that this entity did not send due to problems discovered within ICMP, such as a lack of buffers. This value does not include errors discovered outside the ICMP layer, for example the inability of IP to route the resultant datagram.

Data Source

NodeB_RXI

Source Field

pmIcmpOutErrors

Source Section

IpAccessHostSpb

pmIcmpOutMsgs

The total number of Internet Control Message Protocol (ICMP) messages that this entity attempted to send. Note that this counter includes all those messages counted by icmpOutErrors. For additonal information, refer to RFC 2011.

Data Source

NodeB_RXI

Source Field

pmIcmpOutMsgs

Source Section

IpAccessHostSpb

pmIcmpOutParmProbs

The number of Internet Control Message Protocol (ICMP) Parameter Problem messages sent.

Data Source

NodeB_RXI

Source Field

pmIcmpOutParmProbs

Source Section

IpAccessHostSpb

pmIpFragCreates

The number of IP datagram fragments that have been generated as a result of fragmentation at this entity.

Data Source

NodeB_RXI

Source Field

pmIpFragCreates

Source Section

IpAccessHostSpb

pmIpFragFails

The number of IP datagrams that have been discarded because they needed to be fragmented at this entity but could not be fragmented, for example, because their Don't Fragment flag was set.

Data Source

NodeB_RXI

Source Field

pmIpFragFails

Source Section

IpAccessHostSpb

pmIpFragOKs

The number of IP datagrams that have been successfully fragmented at this entity.

Data Source

NodeB_RXI

Source Field

pmIpFragOKs

Source Section

IpAccessHostSpb

pmIpInAddrErrors

The number of input datagrams discarded because the IP address in the destination field of the IP header was not a valid address to be received at this entity. This count includes invalid addresses (for example, 0.0.0.0) and addresses of unsupported Classes (for example, Class E). For entities that are not IP routers and therefore do not forward datagrams, this counter includes datagrams discarded because the destination address was not a local address. For additonal information, refer to RFC 2011.

Data Source

NodeB_RXI

Source Field

pmIpInAddrErrors

Source Section

IpAccessHostSpb

pmIpInDelivers

The total number of input datagrams successfully delivered to IP user protocols, including Internet Control Message Protocol (ICMP). For additonal information, refer to RFC 2011.

Data Source

NodeB_RXI

Source Field

pmIpInDelivers

Source Section

IpAccessHostSpb

pmIpInDiscards

The number of input IP datagrams, for which no problems were encountered that prevent their continued processing, but which were discarded, for example, due to lack of buffer space. Note that this counter does not include any datagrams discarded while awaiting reassembly.

Data Source

NodeB_RXI

Source Field

pmIpInDiscards

Source Section

IpAccessHostSpb

pmIpInHdrErrors

The number of input datagrams discarded due to errors in their IP headers, including bad checksums, version-number mismatch, other format errors, time-to-live exceeded, errors discovered in processing their IP options, etc. For additonal information, refer to RFC 2011.

Data Source

NodeB_RXI

Source Field

pmIpInHdrErrors

Source Section

IpAccessHostSpb

pmIpInReceives

The total number of input datagrams received from interfaces, including those received in error. For additonal information, refer to RFC 2011.

Data Source

NodeB_RXI

Source Field

pmIpInReceives

Source Section

IpAccessHostSpb

pmIpInUnknownProtos

The number of locally addressed datagrams received successfully but discarded because of an unknown or unsupported protocol. For additonal information, refer to RFC 2011.

Data Source

NodeB_RXI

Source Field

pmIpInUnknownProtos

Source Section

IpAccessHostSpb

pmIpOutDiscards

The number of output IP datagrams, for which no problem was encountered to prevent transmission to their destination, but which were discarded (for example, due to lack of buffer space). Note that this counter includes datagrams counted in ipForwDatagrams, if any such packets met this (discretionary) discard criterion. For additonal information, refer to RFC 2011.

Data Source

NodeB_RXI

Source Field

pmIpOutDiscards

Source Section

IpAccessHostSpb

pmIpOutRequests

The total number of IP datagrams which local IP user protocols, including Internet Control Message Protocol (ICMP) supplied to IP in requests for transmission. Note that this counter does not include any datagrams counted in ipForwDatagrams. For additonal information, refer to RFC 2011.

Data Source

NodeB_RXI

Source Field

pmIpOutRequests

Source Section

IpAccessHostSpb

pmIpReasmFails

The number of failures detected by the IP reassembly algorithm (for whatever reason: timed out, errors, etc). Note that this is not necessarily a count of discarded IP fragments since some

algorithms (notably the algorithm in RFC 815) can lose track of the number of fragments by combining them as they are received.

Data Source

NodeB_RXI

Source Field

pmIpReasmFails

Source Section

IpAccessHostSpb

pmIpReasmOKs

The number of IP datagrams successfully reassembled.

Data Source

NodeB_RXI

Source Field

pmIpReasmOKs

Source Section

IpAccessHostSpb

pmIpReasmReqds

The number of IP fragments received that needed to be reassembled at this entity.

Data Source

NodeB_RXI

Source Field

pmIpReasmReqds

Source Section

IpAccessHostSpb

pmUdpInDatagrams

The total number of User Datagram Protocol (UDP) datagrams delivered to UDP users. For additonal information, refer to RFC 2013.

Data Source

NodeB_RXI

Source Field

pmUdpInDatagrams

Source Section

IpAccessHostSpb

pmUdpInErrors

The number of received User Datagram Protocol (UDP) datagrams that could not be delivered for reasons other than the lack of an application at the destination port. For additonal information, refer to RFC 2013.

Data Source

NodeB_RXI

Source Field

pmUdpInErrors

Source Section

IpAccessHostSpb

pmUdpNoPorts

The total number of received User Datagram Protocol (UDP) datagrams, for which there was no application at the destination port. For additonal information, refer to RFC 2013.

Data Source

NodeB_RXI

Source Field

pmUdpNoPorts

Source Section

IpAccessHostSpb

pmUdpOutDatagrams

The total number of User Datagram Protocol (UDP) datagrams sent from this entity. For additonal information, refer to RFC 2013.

Data Source

NodeB_RXI

Source Field

pmUdpOutDatagrams

Source Section

IpAccessHostSpb

IpAccessHostSpb_RNC Primitive Calculations

The following is a list of primitive calculations for the IpAccessHostSpb_RNC entity.

GRAPHmultiLineSeparator

Special Control Field for Multi-Line Graphs

Calculation

```
""
```

NUMDAYS

of days in Report

Calculation

```
DAYSINREPORT()
```

NUMHOURS

of hours in Summation Data

IpAccessHostSpb_RNC Peg Counts

The following is a list of peg counts for the IpAccessHostSpb_RNC entity.

PERLENSEC

Period length in seconds

Data Source

RNC_RXI

Source Field

gp

Source Section

IpAccessHostSpb

PERLENSEC_K

Period length in seconds aggregation summation in time domain and aggregation maximum between Network Elements.

Data Source

RNC_RXI

Source Field

gp

Source Section

IpAccessHostSpb

pmIcmpInDestUnreachs

The number of Internet Control Message Protocol (ICMP) Destination Unreachable messages received. For additonal information, refer to RFC 2011.

Data Source

RNC_RXI

Source Field

pmIcmpInDestUnreachs

Source Section

IpAccessHostSpb

pmIcmpInEchoReps

The number of Internet Control Message Protocol (ICMP) Echo Reply messages received. For additonal information, refer to RFC 2011.

Data Source

RNC_RXI

Source Field

pmIcmpInEchoReps

Source Section

IpAccessHostSpb

pmIcmpInEchos

The number of Internet Control Message Protocol (ICMP) Echo Request messages received. See RFC 2011.

Data Source

RNC_RXI

Source Field

pmIcmpInEchos

Source Section

IpAccessHostSpb

pmIcmpInErrors

The number of Internet Control Message Protocol (ICMP) messages that the entity received but determined as having ICMP-specific errors (bad ICMP checksums, bad length, etc.). For additonal information, refer to RFC 2011.

Data Source

RNC_RXI

Source Field

pmIcmpInErrors

Source Section

IpAccessHostSpb

pmIcmpInMsgs

The total number of Internet Control Message Protocol (ICMP) messages that the entity received. Note that this counter includes all those counted by icmpInErrors. For additonal information, refer to RFC 2011.

Data Source

RNC_RXI

Source Field

pmIcmpInMsgs

Source Section

IpAccessHostSpb

pmIcmpInParamProbs

The number of Internet Control Message Protocol (ICMP) Parameter Problem messages received.

Data Source

RNC_RXI

Source Field

pmIcmpInParamProbs

Source Section

IpAccessHostSpb

pmIcmpInRedirects

The number of Internet Control Message Protocol (ICMP) Redirect messages received

Data Source

RNC_RXI

Source Field

pmIcmpInRedirects

Source Section

IpAccessHostSpb

pmIcmpInSrcQuenchs

The number of Internet Control Message Protocol (ICMP) Source Quench messages received.

Data Source

RNC_RXI

Source Field

pmIcmpInSrcQuenchs

Source Section

IpAccessHostSpb

pmIcmpInTimeExcds

The number of Internet Control Message Protocol (ICMP) Time Exceeded messages received.

Data Source

RNC_RXI

Source Field

pmIcmpInTimeExcds

Source Section

IpAccessHostSpb

pmIcmpOutDestUnreachs

The number of Internet Control Message Protocol (ICMP) Destination Unreachable messages sent. For additonal information, refer to RFC 2011.

Data Source

RNC_RXI

Source Field

pmIcmpOutDestUnreachs

Source Section

IpAccessHostSpb

pmIcmpOutEchoReps

The number of Internet Control Message Protocol (ICMP) Echo Reply messages sent

Data Source

RNC_RXI

Source Field

pmIcmpOutEchoReps

Source Section

IpAccessHostSpb

pmIcmpOutEchos

The number of Internet Control Message Protocol (ICMP) Echo Request messages sent.

Data Source

RNC_RXI

Source Field

pmIcmpOutEchos

Source Section

IpAccessHostSpb

pmIcmpOutErrors

The number of Internet Control Message Protocol (ICMP) messages that this entity did not send due to problems discovered within ICMP, such as a lack of buffers. This value does not include errors discovered outside the ICMP layer, for example the inability of IP to route the resultant datagram.

Data Source

RNC_RXI

Source Field

pmIcmpOutErrors

Source Section

IpAccessHostSpb

pmIcmpOutMsgs

The total number of Internet Control Message Protocol (ICMP) messages that this entity attempted to send. Note that this counter includes all those messages counted by icmpOutErrors. For additonal information, refer to RFC 2011.

Data Source

RNC_RXI

Source Field

pmIcmpOutMsgs

Source Section

IpAccessHostSpb

pmIcmpOutParmProbs

The number of Internet Control Message Protocol (ICMP) Parameter Problem messages sent.

Data Source

RNC_RXI

Source Field

pmIcmpOutParmProbs

Source Section

IpAccessHostSpb

pmIpFragCreates

The number of IP datagram fragments that have been generated as a result of fragmentation at this entity.

Data Source

RNC_RXI

Source Field

pmIpFragCreates

Source Section

IpAccessHostSpb

pmIpFragFails

The number of IP datagrams that have been discarded because they needed to be fragmented at this entity but could not be fragmented, for example, because their Don't Fragment flag was set.

Data Source

RNC_RXI

Source Field

pmIpFragFails

Source Section

IpAccessHostSpb

pmIpFragOKs

The number of IP datagrams that have been successfully fragmented at this entity.

Data Source

RNC_RXI

Source Field

pmIpFragOKs

Source Section

IpAccessHostSpb

pmIpInAddrErrors

The number of input datagrams discarded because the IP address in the destination field of the IP header was not a valid address to be received at this entity. This count includes invalid addresses (for example, 0.0.0.0) and addresses of unsupported Classes (for example, Class E). For entities that are not IP routers and therefore do not forward datagrams, this counter includes datagrams discarded because the destination address was not a local address. For additonal information, refer to RFC 2011.

Data Source

RNC_RXI

Source Field

pmIpInAddrErrors

Source Section

IpAccessHostSpb

pmIpInDelivers

The total number of input datagrams successfully delivered to IP user protocols, including Internet Control Message Protocol (ICMP). For additonal information, refer to RFC 2011.

Data Source

RNC_RXI

Source Field

pmIpInDelivers

Source Section

IpAccessHostSpb

pmIpInDiscards

The number of input IP datagrams, for which no problems were encountered that prevent their continued processing, but which were discarded, for example, due to lack of buffer space. Note that this counter does not include any datagrams discarded while awaiting reassembly.

Data Source

RNC_RXI

Source Field

pmIpInDiscards

Source Section

IpAccessHostSpb

pmIpInHdrErrors

The number of input datagrams discarded due to errors in their IP headers, including bad checksums, version-number mismatch, other format errors, time-to-live exceeded, errors discovered in processing their IP options, etc. For additonal information, refer to RFC 2011.

Data Source

RNC_RXI

Source Field

pmIpInHdrErrors

Source Section

IpAccessHostSpb

pmIpInReceives

The total number of input datagrams received from interfaces, including those received in error. For additonal information, refer to RFC 2011.

Data Source

RNC_RXI

Source Field

pmIpInReceives

Source Section

IpAccessHostSpb

pmIpInUnknownProtos

The number of locally addressed datagrams received successfully but discarded because of an unknown or unsupported protocol. For additonal information, refer to RFC 2011.

Data Source

RNC_RXI

Source Field

pmIpInUnknownProtos

Source Section

IpAccessHostSpb

pmIpOutDiscards

The number of output IP datagrams, for which no problem was encountered to prevent transmission to their destination, but which were discarded (for example, due to lack of buffer space). Note that this counter includes datagrams counted in ipForwDatagrams, if any such packets met this (discretionary) discard criterion. For additonal information, refer to RFC 2011.

Data Source

RNC_RXI

Source Field

pmIpOutDiscards

Source Section

IpAccessHostSpb

pmIpOutRequests

The total number of IP datagrams which local IP user protocols, including Internet Control Message Protocol (ICMP) supplied to IP in requests for transmission. Note that this counter does not include any datagrams counted in ipForwDatagrams. For additonal information, refer to RFC 2011.

Data Source

RNC_RXI

Source Field

pmIpOutRequests

Source Section

IpAccessHostSpb

pmIpReasmFails

The number of failures detected by the IP reassembly algorithm (for whatever reason: timed out, errors, etc). Note that this is not necessarily a count of discarded IP fragments since some algorithms (notably the algorithm in RFC 815) can lose track of the number of fragments by combining them as they are received.

Data Source

RNC_RXI

Source Field

pmIpReasmFails

Source Section

IpAccessHostSpb

pmIpReasmOKs

The number of IP datagrams successfully reassembled.

Data Source

RNC_RXI

Source Field

pmIpReasmOKs

Source Section

IpAccessHostSpb

pmIpReasmReqds

The number of IP fragments received that needed to be reassembled at this entity.

Data Source

RNC_RXI

Source Field

pmIpReasmReqds

Source Section

IpAccessHostSpb

pmUdpInDatagrams

The total number of User Datagram Protocol (UDP) datagrams delivered to UDP users. For additonal information, refer to RFC 2013.

Data Source

RNC_RXI

Source Field

pmUdpInDatagrams

Source Section

IpAccessHostSpb

pmUdpInErrors

The number of received User Datagram Protocol (UDP) datagrams that could not be delivered for reasons other than the lack of an application at the destination port. For additonal information, refer to RFC 2013.

Data Source

RNC_RXI

Source Field

pmUdpInErrors

Source Section

IpAccessHostSpb

pmUdpNoPorts

The total number of received User Datagram Protocol (UDP) datagrams, for which there was no application at the destination port. For additonal information, refer to RFC 2013.

Data Source

RNC_RXI

Source Field

pmUdpNoPorts

Source Section

IpAccessHostSpb

pmUdpOutDatagrams

The total number of User Datagram Protocol (UDP) datagrams sent from this entity. For additonal information, refer to RFC 2013.

Data Source

RNC_RXI

Source Field

pmUdpOutDatagrams

Source Section

IpAccessHostSpb

IpAtmLink_NodeB Primitive Calculations

The following is a list of primitive calculations for the IpAtmLink_NodeB entity.

GRAPHmultiLineSeparator

Special Control Field for Multi-Line Graphs

Calculation

```
""
```

NUMDAYS

of days in Report

Calculation

```
DAYSINREPORT()
```

NUMHOURS

of hours in Summation Data

Calculation

Received_Packets_Data_Link_NodeB

Received Packets in IP Data Link Layer

Calculation

```
vsum( pmNoOfIfInNUcastPkts,pmNoOfIfInUcastPkts )
```

Sent_Packets_IP_Data_Link_NodeB

Sent Packets in IP Data Link Layer

Calculation

```
vsum(pmNoOfIfOutNUcastPkts,pmNoOfIfOutUcastPkts)
```

IpAtmLink_NodeB Peg Counts

The following is a list of peg counts for the IpAtmLink_NodeB entity.

NodeB_RELEASE

Release

Data Source

NodeB_RNC_RXI

Source Section

IpAtmLink_NodeB

PERLENSEC

Period Length

Data Source

NodeB_RNC_RXI

Source Field

perlensec

Source Section

IpAtmLink_NodeB_WMGeneral

PERLENSEC_K

Period length in seconds aggregation summation in time domain and aggregation maximum between Network Elements.

Data Source

NodeB_RNC_RXI

Source Field

perlensec

Source Section

IpAtmLink_NodeB_WMGeneral

pmNoOfIfInDiscards

Number of input packets discarded due to resource limitations.

Data Source

NodeB_RNC_RXI

Source Field

pmNoOfIfInDiscards

Source Section

IpAtmLink_NodeB

pmNoOfIfInErrors

Number of input packets discarded due to any error.

Data Source

NodeB_RNC_RXI

Source Field

pmNoOfIfInErrors

Source Section

IpAtmLink_NodeB

pmNoOfIfInNUcastPkts

Number of input broadcast/multicast packets delivered to a higher layer.

Data Source

NodeB_RNC_RXI

Source Field

pmNoOfIfInNUcastPkts

Source Section

IpAtmLink_NodeB

pmNoOfIfInUcastPkts

Number of input unicast packets delivered to a higher layer.

Data Source

NodeB_RNC_RXI

Source Field

pmNoOfIfInUcastPkts

Source Section

IpAtmLink_NodeB

pmNoOfIfOutDiscards

The number of outbound packets discarded due to resource limitations.

Data Source

NodeB_RXI

Source Field

pmNoOfIfOutDiscards

Source Section

IpAtmLink

pmNoOfIfOutNUcastPkts

Number of output broadcast/multicast packets delivered to higher layer.

Data Source

NodeB_RNC_RXI

Source Field

pmNoOfIfOutNUcastPkts

Source Section

IpAtmLink_NodeB

pmNoOfIfOutUcastPkts

Number of out unicast packets delivered to a higher layer.

Data Source

NodeB_RNC_RXI

Source Field

pmNoOfIfOutUcastPkts

Source Section

IpAtmLink_NodeB

IpAtmLink_RNC Primitive Calculations

The following is a list of primitive calculations for the IpAtmLink_RNC entity.

GRAPHmultiLineSeparator

Special Control Field for Multi-Line Graphs

Calculation

```
""
```

NUMDAYS

of days in Report

Calculation

```
DAYSINREPORT()
```

NUMHOURS

of hours in Summation Data

Calculation

Received_Packets_Data_Link_RNC

Sent Packets in IP Data Link Layer

Calculation

```
vsum(pmNoOfIfOutNUcastPkts,pmNoOfIfOutUcastPkts)
```

IpAtmLink_RNC Peg Counts

The following is a list of peg counts for the IpAtmLink_RNC entity.

PERLENSEC

Period Length

Data Source

NodeB_RNC_RXI

Source Field

perlensec

Source Section

IpAtmLink_RNC_WMGeneral

PERLENSEC_K

Period length in seconds aggregation summation in time domain and aggregation maximum between Network Elements.

Data Source

NodeB_RNC_RXI

Source Field

perlensec

Source Section

IpAtmLink_RNC_WMGeneral

pmNoOfIfInDiscards

Number of input packets discarded due to resource limitations.

Data Source

NodeB_RNC_RXI

Source Field

pmNoOfIfInDiscards

Source Section

IpAtmLink_RNC

pmNoOfIfInErrors

Number of input packets discarded due to any error.

Data Source

NodeB_RNC_RXI

Source Field

pmNoOfIfInErrors

Source Section

IpAtmLink_RNC

pmNoOfIfInNUcastPkts

Number of input broadcast/multicast packets delivered to a higher layer.

Data Source

NodeB_RNC_RXI

Source Field

pmNoOfIfInNUcastPkts

Source Section

IpAtmLink_RNC

pmNoOfIfInUcastPkts

Number of input unicast packets delivered to a higher layer.

Data Source

NodeB_RNC_RXI

Source Field

pmNoOfIfInUcastPkts

Source Section

IpAtmLink_RNC

pmNoOfIfOutDiscards

The number of outbound packets discarded due to resource limitations.

Data Source

RNC_RXI

Source Field

pmNoOfIfOutDiscards

Source Section

IpAtmLink

pmNoOfIfOutNUcastPkts

Number of output broadcast/multicast packets delivered to higher layer.

Data Source

NodeB_RNC_RXI

Source Field

pmNoOfIfOutNUcastPkts

Source Section

IpAtmLink_RNC

pmNoOfIfOutUcastPkts

Number of out unicast packets delivered to a higher layer.

Data Source

NodeB_RNC_RXI

Source Field

pmNoOfIfOutUcastPkts

Source Section

IpAtmLink_RNC

RNC_RELEASE

Release

Data Source

NodeB_RNC_RXI

Source Section

IpAtmLink_RNC

IpbService Primitive Calculations

The following is a list of primitive calculations for the IpbService entity.

GRAPHmultiLineSeparator

Special Control Field for Multi-Line Graphs

Calculation

""

NUMDAYS

of days in Report

Calculation

```
DAYSINREPORT()
```

NUMHOURS

of hours in Summation Data

Calculation

p_Seizures_Sucess_Rate

Percentege of Seizures which are sucessful

Calculation

```
100.0 * vsum( pmTotalSeizures, -1 * pmUnsuccSeizures ) / pmTotalSeizures
```

IpbService Peg Counts

The following is a list of peg counts for the IpbService entity.

PERLENSEC

Period length in seconds

Data Source

RNC_RXI

Source Field

PERLENSEC

Source Section

IpbService_Gen

pmForcedRelease

The total number of forced device releases.

Data Source

RNC_RXI

Source Field

pmForcedRelease

Source Section

IpbService

pmNormalRelease

The total number of normal device releases.

Data Source

RNC_RXI

Source Field

pmNormalRelease

Source Section

IpbService

pmTotalSeizures

The total number of seizure attempt of devices from this device Service.

Data Source

RNC_RXI

Source Field

pmTotalSeizures

Source Section

IpbService

pmUnsuccSeizures

The total number of failed seizure attempts due to congestion.

Data Source

RNC_RXI

Source Field

pmUnsuccSeizures

Source Section

IpbService

RNC_RELEASE

Release

Data Source

RNC_RXI

Source Field

RNC_RELEASE

IpEthPacketDataRouter Primitive Calculations

The following is a list of primitive calculations for the IpEthPacketDataRouter entity.

GRAPHmultiLineSeparator

Special Control Field for Multi-Line Graphs

Calculation

```
""
```

NUMDAYS

of days in Report

Calculation

```
DAYSINREPORT()
```

NUMHOURS

of hours in Summation Data

IpEthPacketDataRouter Peg Counts

The following is a list of peg counts for the IpEthPacketDataRouter entity.

PERLENSEC

Period length in seconds

Data Source

RNC

Source Field

gp

Source Section

IpEthPacketDataRouter

PERLENSEC_K

Period length in seconds aggregation summation in time domain and aggregation maximum between Network Elements.

Data Source

RNC

Source Field

gp

Source Section

IpEthPacketDataRouter

pmNoFaultyIpPackets

Number of faulty IP packets.

Data Source

RNC

Source Field

pmNoFaultyIpPackets

Source Section

IpEthPacketDataRouter

pmNoRoutedIpBytesDl

Number of routed user IP bytes DL.

Data Source

RNC

Source Field

pmNoRoutedIpBytesDl

Source Section

IpEthPacketDataRouter

pmNoRoutedIpBytesUl

Number of routed user IP bytes UL

Data Source

RNC

Source Field

pmNoRoutedIpBytesUl

Source Section

IpEthPacketDataRouter

pmNoRoutedIpPacketsDl

Number of routed user IP packets DL.

Data Source

RNC

Source Field

pmNoRoutedIpPacketsDl

Source Section

IpEthPacketDataRouter

pmNoRoutedIpPacketsUl

Number of routed user IP packets UL.

Data Source

RNC

Source Field

pmNoRoutedIpPacketsUl

Source Section

IpEthPacketDataRouter

pmSamplesPacketDataRab

Number of samples recorded within the ROP period for number of packet data RABs.

Data Source

RNC

Source Field

pmSamplesPacketDataRab

Source Section

IpEthPacketDataRouter

pmSumPacketDataRab

Sum of all sample values recorded for number of packet data RABs.

Data Source

RNC

Source Field

pmSumPacketDataRab

Source Section

IpEthPacketDataRouter

IpHostLink_NodeB Primitive Calculations

The following is a list of primitive calculations for the IpHostLink_NodeB entity.

GRAPHmultiLineSeparator

Special Control Field for Multi-Line Graphs

Calculation

```
""
```

NUMDAYS

of days in Report

Calculation

```
DAYSINREPORT()
```

NUMHOURS

of hours in Summation Data

Calculation

IpHostLink_NodeB Peg Counts

The following is a list of peg counts for the IpHostLink_NodeB entity.

PERLENSEC

Period Length

Data Source

NodeB_RXI

Source Field

PERLENSEC

Source Section

SpbDeviceSet_RNC_WMGeneral

PERLENSEC_K

Period length in seconds aggregation summation in time domain and aggregation maximum between Network Elements.

Data Source

NodeB_RXI

Source Field

PERLENSEC

Source Section

SpbDeviceSet_RNC_WMGeneral

pmNoOfIfInDiscards

The number of input packets discarded due to resource limitations.

Data Source

NodeB_RXI

Source Field

pmNoOfIfInDiscards

Source Section

IpHostLink

pmNoOfIfInErrors

The number of input packets discarded due to any error.

Data Source

NodeB_RXI

Source Field

pmNoOfIfInErrors

Source Section

IpHostLink

pmNoOfIfInNUcastPkts

The number of input broadcast or multicast packets delivered to higher layer.

Data Source

NodeB_RXI

Source Field

pmNoOfIfInNUcastPkts

Source Section

IpHostLink

pmNoOfIfInUcastPkts

The number of input unicast packets delivered to higher layer.

Data Source

NodeB_RXI

Source Field

pmNoOfIfInUcastPkts

Source Section

IpHostLink

pmNoOfIfOutDiscards

The number of outbound packets discarded due to resource limitations.

Data Source

NodeB_RXI

Source Field

pmNoOfIfOutDiscards

Source Section

IpHostLink

pmNoOfIfOutNUcastPkts

The number of transmitted outgoing broadcast or multicast packets.

Data Source

NodeB_RXI

Source Field

pmNoOfIfOutNUcastPkts

Source Section

IpHostLink

pmNoOfIfOutUcastPkts

The number of packets that higher-level protocols requested to be transmitted to a subnetwork-unicast address.

Data Source

NodeB_RXI

Source Field

pmNoOfIfOutUcastPkts

Source Section

IpHostLink

IpInterface_NodeB Primitive Calculations

The following is a list of primitive calculations for the IpInterface_NodeB entity.

GRAPHmultiLineSeparator

Special Control Field for Multi-Line Graphs

Calculation

```
""
```

NUMDAYS

of days in Report

Calculation

```
DAYSINREPORT()
```

NUMHOURS

of hours in Summation Data

IpInterface_NodeB Peg Counts

The following is a list of peg counts for the IpInterface_NodeB entity.

PERLENSEC

Period length in seconds

Data Source

NodeB_RXI

Source Field

gp

Source Section

IpInterface

PERLENSEC_K

Period length in seconds aggregation summation in time domain and aggregation maximum between Network Elements.

Data Source

NodeB_RXI

Source Field

gp

Source Section

IpInterface

pmDot1qTpVlanPortInFrames

The number of valid frames received on this port belonging to this VLAN and with a protocol processed by the local forwarding process. See RFC 2674.

Data Source

NodeB_RXI

Source Field

pmDot1qTpVlanPortInFrames

Source Section

IpInterface

pmDot1qTpVlanPortOutFrames

The number of valid frames transmitted from this port belonging to this VLAN. See RFC 2674.

Data Source

NodeB_RXI

Source Field

pmDot1qTpVlanPortOutFrames

Source Section

IpInterface

pmFramesExcTrafDsc

The number of ethernet frames which has exeeded the traffic descriptor. Condition: An ethernet frame is received, which exeeds the traffic descriptor.

Data Source

NodeB_RXI

Source Field

pmFramesExcTrafDsc

Source Section

IpInterface

pmIfStatsIpAddrErrors

Number of received IP datagrams discarded due to invalid header address. See RFC 2011.

Data Source

NodeB_RXI

Source Field

pmIfStatsIpAddrErrors

Source Section

IpInterface

pmIfStatsIpInDiscards

Number of received IP datagrams discarded due to resource problems (for example, lack of buffer space). See RFC 2011.

Data Source

NodeB_RXI

Source Field

pmIfStatsIpInDiscards

Source Section

IpInterface

pmIfStatsIpInHdrErrors

Number of received IP datagrams with an error in the header. See RFC 2011.

Data Source

NodeB_RXI

Source Field

pmIfStatsIpInHdrErrors

Source Section

IpInterface

pmIfStatsIpInReceives

Number of received IP datagrams, including those with errors. See RFC 2011.

Data Source

NodeB_RXI

Source Field

pmIfStatsIpInReceives

Source Section

IpInterface

pmIfStatsIpOutDiscards

The number of IP datagrams that should be sent, but which were discarded due to resource problems (for example, lack of buffer space). See RFC 2011.

Data Source

NodeB_RXI

Source Field

pmIfStatsIpOutDiscards

Source Section

IpInterface

pmIfStatsIpOutRequests

Number of IP datagrams requested by the IP user protocol to be processed for sending. See RFC 2011.

Data Source

NodeB_RXI

Source Field

pmIfStatsIpOutRequests

Source Section

IpInterface

pmIfStatsIpUnknownProtos

Number of IP datagrams received, with an unknown or not supported protocol. See RFC 2011.

Data Source

NodeB_RXI

Source Field

pmIfStatsIpUnknownProtos

Source Section

IpInterface

pmNoOfFailedPingsDefaultRouter0

The total number of failed pings towards the defaultRouter0 on the active link only. The counter value survives the link switch when applicable.

Data Source

NodeB_RXI

Source Field

pmNoOfFailedPingsDefaultRouter0

Source Section

IpInterface

pmNoOfFailedPingsDefaultRouter1

The total number of failed pings towards the defaultRouter1 on the active link only. The counter value survives the link switch when applicable.

Data Source

NodeB_RXI

Source Field

pmNoOfFailedPingsDefaultRouter1

Source Section

IpInterface

pmNoOfFailedPingsDefaultRouter2

The total number of failed pings towards the defaultRouter2 on the active link only. The counter value survives the link switch when applicable.

Data Source

NodeB_RXI

Source Field

pmNoOfFailedPingsDefaultRouter2

Source Section

IpInterface

pmOctetsExcTrafDsc

The number of octets which has exeeded the traffic descriptor.

Data Source

NodeB_RXI

Source Field

pmOctetsExcTrafDsc

Source Section

IpInterface

IpInterface_RNC Primitive Calculations

The following is a list of primitive calculations for the IpInterface_RNC entity.

GRAPHmultiLineSeparator

Special Control Field for Multi-Line Graphs

Calculation

```
""
```

NUMDAYS

of days in Report

Calculation

```
DAYSINREPORT()
```

NUMHOURS

of hours in Summation Data

IpInterface_RNC Peg Counts

The following is a list of peg counts for the IpInterface_RNC entity.

PERLENSEC

Period length in seconds

Data Source

RNC_RXI

Source Field

gp

Source Section

IpInterface

PERLENSEC_K

Period length in seconds aggregation summation in time domain and aggregation maximum between Network Elements.

Data Source

RNC_RXI

Source Field

gp

Source Section

IpInterface

pmDot1qTpVlanPortInFrames

The number of valid frames received on this port belonging to this VLAN and with a protocol processed by the local forwarding process. See RFC 2674.

Data Source

RNC_RXI

Source Field

pmDot1qTpVlanPortInFrames

Source Section

IpInterface

pmDot1qTpVlanPortOutFrames

The number of valid frames transmitted from this port belonging to this VLAN. See RFC 2674.

Data Source

RNC_RXI

Source Field

pmDot1qTpVlanPortOutFrames

Source Section

IpInterface

pmFramesExcTrafDsc

The number of ethernet frames which has exeeded the traffic descriptor. Condition: An ethernet frame is received, which exeeds the traffic descriptor.

Data Source

RNC_RXI

Source Field

pmFramesExcTrafDsc

Source Section

IpInterface

pmIfStatsIpAddrErrors

Number of received IP datagrams discarded due to invalid header address. See RFC 2011.

Data Source

RNC_RXI

Source Field

pmIfStatsIpAddrErrors

Source Section

IpInterface

pmIfStatsIpInDiscards

Number of received IP datagrams discarded due to resource problems (for example, lack of buffer space). See RFC 2011.

Data Source

RNC_RXI

Source Field

pmIfStatsIpInDiscards

Source Section

IpInterface

pmIfStatsIpInHdrErrors

Number of received IP datagrams with an error in the header. See RFC 2011.

Data Source

RNC_RXI

Source Field

pmIfStatsIpInHdrErrors

Source Section

IpInterface

pmIfStatsIpInReceives

Number of received IP datagrams, including those with errors. See RFC 2011.

Data Source

RNC_RXI

Source Field

pmIfStatsIpInReceives

Source Section

IpInterface

pmIfStatsIpOutDiscards

The number of IP datagrams that should be sent, but which were discarded due to resource problems (for example, lack of buffer space). See RFC 2011.

Data Source

RNC_RXI

Source Field

pmIfStatsIpOutDiscards

Source Section

IpInterface

pmIfStatsIpOutRequests

Number of IP datagrams requested by the IP user protocol to be processed for sending. See RFC 2011.

Data Source

RNC_RXI

Source Field

pmIfStatsIpOutRequests

Source Section

IpInterface

pmIfStatsIpUnknownProtos

Number of IP datagrams received, with an unknown or not supported protocol. See RFC 2011.

Data Source

RNC_RXI

Source Field

pmIfStatsIpUnknownProtos

Source Section

IpInterface

pmNoOfFailedPingsDefaultRouter0

The total number of failed pings towards the defaultRouter0 on the active link only. The counter value survives the link switch when applicable.

Data Source

RNC_RXI

Source Field

pmNoOfFailedPingsDefaultRouter0

Source Section

IpInterface

pmNoOfFailedPingsDefaultRouter1

The total number of failed pings towards the defaultRouter1 on the active link only. The counter value survives the link switch when applicable.

Data Source

RNC_RXI

Source Field

pmNoOfFailedPingsDefaultRouter1

Source Section

IpInterface

pmNoOfFailedPingsDefaultRouter2

The total number of failed pings towards the defaultRouter2 on the active link only. The counter value survives the link switch when applicable.

Data Source

RNC_RXI

Source Field

pmNoOfFailedPingsDefaultRouter2

Source Section

IpInterface

pmOctetsExcTrafDsc

The number of octets which has exeeded the traffic descriptor.

Data Source

RNC_RXI

Source Field

pmOctetsExcTrafDsc

Source Section

IpInterface

IpSystem_NodeB Primitive Calculations

The following is a list of primitive calculations for the IpSystem_NodeB entity.

GRAPHmultiLineSeparator

Special Control Field for Multi-Line Graphs

Calculation

```
""
```

NUMDAYS

of days in Report

Calculation

```
DAYSINREPORT()
```

NUMHOURS

of hours in Summation Data

Calculation

IpSystem_RNC Primitive Calculations

The following is a list of primitive calculations for the IpSystem_RNC entity.

GRAPHmultiLineSeparator

Special Control Field for Multi-Line Graphs

Calculation

```
""
```

NUMDAYS

of days in Report

Calculation

```
DAYSINREPORT()
```

NUMHOURS

of hours in Summation Data

Calculation

IubDataStreams Primitive Calculations

The following is a list of primitive calculations for the IubDataStreams entity.

GRAPHmultiLineSeparator

Special Control Field for Multi-Line Graphs

Calculation

```
""
```

NUMDAYS

of days in Report

Calculation

```
DAYSINREPORT()
```

NUMHOURS

of hours in Summation Data

Calculation

IubDataStreams Peg Counts

The following is a list of peg counts for the IubDataStreams entity.

PERLENSEC

Period Length

Data Source

NodeB

Source Field

perlensec

Source Section

IubDataStreams_WMGeneral

PERLENSEC_K

Period length in seconds aggregation summation in time domain and aggregation maximum between Network Elements.

Updated: 2009-07-22

Data Source

NodeB

Source Field

perlensec

Source Section

IubDataStreams_WMGeneral

pmCAlcIubHsLmtRatSpi00

The relative number of occurrences when the calculated capacity allocation figure is limited by the Iub high-speed bandwidth during a 100 ms period. Each counter observes a specific SPI. The different flows are configured ON/OFF using RBS MOM parameter IubDataStreams::schHsFlowControlOnOff.

Data Source

NodeB

Source Field

pmCapAllocIubHsLimitingRatioSpi00

Source Section

IubDataStreams

pmCAlcIubHsLmtRatSpi01

The relative number of occurrences when the calculated capacity allocation figure is limited by the Iub high-speed bandwidth during a 100 ms period. Each counter observes a specific SPI. The different flows are configured ON/OFF using RBS MOM parameter IubDataStreams::schHsFlowControlOnOff.

Data Source

NodeB

Source Field

pmCapAllocIubHsLimitingRatioSpi01

Source Section

IubDataStreams

pmCAlcIubHsLmtRatSpi02

The relative number of occurrences when the calculated capacity allocation figure is limited by the Iub high-speed bandwidth during a 100 ms period. Each counter observes a specific SPI. The different flows are configured ON/OFF using RBS MOM parameter IubDataStreams::schHsFlowControlOnOff.

Data Source

NodeB

Source Field

pmCapAllocIubHsLimitingRatioSpi02

Source Section

IubDataStreams

pmCAlcIubHsLmtRatSpi03

The relative number of occurrences when the calculated capacity allocation figure is limited by the Iub high-speed bandwidth during a 100 ms period. Each counter observes a specific SPI. The different flows are configured ON/OFF using RBS MOM parameter IubDataStreams::schHsFlowControlOnOff.

Data Source

NodeB

Source Field

pmCapAllocIubHsLimitingRatioSpi03

Source Section

IubDataStreams

pmCAlcIubHsLmtRatSpi04

The relative number of occurrences when the calculated capacity allocation figure is limited by the Iub high-speed bandwidth during a 100 ms period. Each counter observes a specific SPI. The different flows are configured ON/OFF using RBS MOM parameter IubDataStreams::schHsFlowControlOnOff.

Data Source

NodeB

Source Field

pmCapAllocIubHsLimitingRatioSpi04

Source Section

IubDataStreams

pmCAlcIubHsLmtRatSpi05

The relative number of occurrences when the calculated capacity allocation figure is limited by the Iub high-speed bandwidth during a 100 ms period. Each counter observes a specific SPI. The different flows are configured ON/OFF using RBS MOM parameter IubDataStreams::schHsFlowControlOnOff.

Data Source

NodeB

Source Field

pmCapAllocIubHsLimitingRatioSpi05

Source Section

IubDataStreams

pmCAlcIubHsLmtRatSpi06

The relative number of occurrences when the calculated capacity allocation figure is limited by the Iub high-speed bandwidth during a 100 ms period. Each counter observes a specific SPI. The different flows are configured ON/OFF using RBS MOM parameter IubDataStreams::schHsFlowControlOnOff.

Data Source

NodeB

Source Field

pmCapAllocIubHsLimitingRatioSpi06

Source Section

IubDataStreams

pmCAlcIubHsLmtRatSpi07

The relative number of occurrences when the calculated capacity allocation figure is limited by the Iub high-speed bandwidth during a 100 ms period. Each counter observes a specific SPI.

The different flows are configured ON/OFF using RBS MOM parameter IubDataStreams::schHsFlowControlOnOff.

Data Source

NodeB

Source Field

pmCapAllocIubHsLimitingRatioSpi07

Source Section

IubDataStreams

pmCAlcIubHsLmtRatSpi08

The relative number of occurrences when the calculated capacity allocation figure is limited by the Iub high-speed bandwidth during a 100 ms period. Each counter observes a specific SPI. The different flows are configured ON/OFF using RBS MOM parameter IubDataStreams::schHsFlowControlOnOff.

Data Source

NodeB

Source Field

pmCapAllocIubHsLimitingRatioSpi08

Source Section

IubDataStreams

pmCAlcIubHsLmtRatSpi09

The relative number of occurrences when the calculated capacity allocation figure is limited by the Iub high-speed bandwidth during a 100 ms period. Each counter observes a specific SPI. The different flows are configured ON/OFF using RBS MOM parameter IubDataStreams::schHsFlowControlOnOff.

Data Source

NodeB

Source Field

pmCapAllocIubHsLimitingRatioSpi09

Source Section

IubDataStreams

pmCAlcIubHsLmtRatSpi10

The relative number of occurrences when the calculated capacity allocation figure is limited by the Iub high-speed bandwidth during a 100 ms period. Each counter observes a specific SPI. The different flows are configured ON/OFF using RBS MOM parameter IubDataStreams::schHsFlowControlOnOff.

Data Source

NodeB

Source Field

pmCapAllocIubHsLimitingRatioSpi10

Source Section

IubDataStreams

pmCAlcIubHsLmtRatSpi11

The relative number of occurrences when the calculated capacity allocation figure is limited by the Iub high-speed bandwidth during a 100 ms period. Each counter observes a specific SPI. The different flows are configured ON/OFF using RBS MOM parameter IubDataStreams::schHsFlowControlOnOff.

Data Source

NodeB

Source Field

pmCapAllocIubHsLimitingRatioSpi11

Source Section

IubDataStreams

pmCAlcIubHsLmtRatSpi12

The relative number of occurrences when the calculated capacity allocation figure is limited by the Iub high-speed bandwidth during a 100 ms period. Each counter observes a specific SPI. The different flows are configured ON/OFF using RBS MOM parameter IubDataStreams::schHsFlowControlOnOff.

Data Source

NodeB

Source Field

pmCapAllocIubHsLimitingRatioSpi12

Source Section

IubDataStreams

pmCAlcIubHsLmtRatSpi13

The relative number of occurrences when the calculated capacity allocation figure is limited by the Iub high-speed bandwidth during a 100 ms period. Each counter observes a specific SPI. The different flows are configured ON/OFF using RBS MOM parameter IubDataStreams::schHsFlowControlOnOff.

Data Source

NodeB

Source Field

pmCapAllocIubHsLimitingRatioSpi13

Source Section

IubDataStreams

pmCAlcIubHsLmtRatSpi14

The relative number of occurrences when the calculated capacity allocation figure is limited by the Iub high-speed bandwidth during a 100 ms period. Each counter observes a specific SPI. The different flows are configured ON/OFF using RBS MOM parameter IubDataStreams::schHsFlowControlOnOff.

Data Source

NodeB

Source Field

pmCapAllocIubHsLimitingRatioSpi14

Source Section

IubDataStreams

pmCAlcIubHsLmtRatSpi15

The relative number of occurrences when the calculated capacity allocation figure is limited by the Iub high-speed bandwidth during a 100 ms period. Each counter observes a specific SPI. The different flows are configured ON/OFF using RBS MOM parameter IubDataStreams::schHsFlowControlOnOff.

Data Source

NodeB

Source Field

pmCapAllocIubHsLimitingRatioSpi15

Source Section

IubDataStreams

pmCapAlloclubHsLimitingRatio

The relative number of occurrences when the calculated capacity allocation figure is limited by the Iub high-speed bandwidth during a 100 ms period

Data Source

NodeB

Source Field

pmCapAlloclubHsLimitingRatio

Source Section

IubDataStreams

pmDchFramesCrcMismatch

The number of DCH Iub FP frames discarded owing to header or payload CRC mismatch.

Data Source

NodeB

Source Field

pmDchFramesCrcMismatch

Source Section

IubDataStreams

pmDchFramesLate

The number of DCH Iub FP frames arrived after ToAWE but before LTOA.

Data Source

NodeB

Source Field

pmDchFramesLate

Source Section

IubDataStreams

pmDchFramesOutOfSequenceDl

The number of Iub DCH Frame Protocol (FP) frames received out-of-sequence in the downlink direction.

Data Source

NodeB

Source Field

pmDchFramesOutOfSequenceDl

Source Section

IubDataStreams

pmDchFramesReceived

The number of received DCH Iub frames in kframes (1000 frames).

Data Source

NodeB

Source Field

pmDchFramesReceived

Source Section

IubDataStreams

pmDchFramesTooLate

The number of DCH Iub FP frames discarded owing to too late arrival, that is, after LTOA.

Data Source

NodeB

Source Field

pmDchFramesTooLate

Source Section

IubDataStreams

pmEdchIubLimitingRatio

PEG Counter for the number of 100 ms periods where the Iub has been the only limiting factor during at least one TTI is divided by the number of 100 ms periods during which edchGrantRate has been bigger than zero. The result is a percentage figure between 0.0 and 100.0%. Trigger: The E-DCH scheduler is limited by 1) RBS HW, 2) Iub bandwidth, and 3) Uu interface resources. These resource limitations for this measurement are measured every 100 ms. Each 100 ms period that the UE wanted EUL bit rate (edchGrantRate) during any of the 2 or/and 10 ms TTIs during the 100 ms period that has been higher than the available resources and that the only limiting resource during at least one of these TTIs has been the E-DCH Iub Scheduler Limit Rate (edchIubSchLimitRate), then that 100 ms period is marked as an Iub Limiting period.

Data Source

NodeB

Source Field

pmEdchIubLimitingRatio

Source Section

IubDataStreams

pmEdchIubLimitingRatio_P7FP

Indicates in what degree the EUL traffic in uplink is limited by the Iub/Iur interfaces, between RBS and SRNC. When a high value is indicated, it should be considered to extend Iub/Iur with higher EUL bandwidth. Indicates the percentage of 100 ms periods with scheduled EUL traffic where Iub has been the only limiting factor during at least one TTI. The result is a percentage figure between 0.0 and 100.0%.

Data Source

NodeB

Source Field

pmEdchIubLimitingRatio

Source Section

IubDataStreams

pmHsDataFramesLost

(Retired in Utran P6)The number of high-speed data frames lost over Iub in the RBS.

Data Source

NodeB

Source Field

pmHsDataFramesLost

Source Section

IubDataStreams

pmHsDataFramesReceived

The total number of high-speed data frames received over Iub in the RBS

Data Source

NodeB

Source Field

pmHsDataFramesReceived

Source Section

IubDataStreams

pmHsDataFrmsRxSpi00

The total number of high-speed data frames received by the RBS over the Iub interface. Each counter observes a specific Schedular Priority Index (SPI). The different flows are configured ON/OFF using RBS MOM parameter IubDataStreams:: schHsFlowControlOnOff.

Data Source

NodeB

Source Field

pmHsDataFramesReceivedSpi00

Source Section

IubDataStreams

pmHsDataFrmsRxSpi01

The total number of high-speed data frames received by the RBS over the Iub interface. Each counter observes a specific Schedular Priority Index (SPI). The different flows are configured ON/OFF using RBS MOM parameter IubDataStreams:: schHsFlowControlOnOff.

Data Source

NodeB

Source Field

pmHsDataFramesReceivedSpi01

Source Section

IubDataStreams

pmHsDataFrmsRxSpi02

The total number of high-speed data frames received by the RBS over the Iub interface. Each counter observes a specific Schedular Priority Index (SPI). The different flows are configured ON/OFF using RBS MOM parameter IubDataStreams:: schHsFlowControlOnOff.

Data Source

NodeB

Source Field

pmHsDataFramesReceivedSpi02

Source Section

IubDataStreams

pmHsDataFrmsRxSpi03

The total number of high-speed data frames received by the RBS over the Iub interface. Each counter observes a specific Schedular Priority Index (SPI). The different flows are configured ON/OFF using RBS MOM parameter IubDataStreams:: schHsFlowControlOnOff.

Data Source

NodeB

Source Field

pmHsDataFramesReceivedSpi03

Source Section

IubDataStreams

pmHsDataFrmsRxSpi04

The total number of high-speed data frames received by the RBS over the Iub interface. Each counter observes a specific Schedular Priority Index (SPI). The different flows are configured ON/OFF using RBS MOM parameter IubDataStreams:: schHsFlowControlOnOff.

Data Source

NodeB

Source Field

pmHsDataFramesReceivedSpi04

Source Section

IubDataStreams

pmHsDataFrmsRxSpi05

The total number of high-speed data frames received by the RBS over the Iub interface. Each counter observes a specific Schedular Priority Index (SPI). The different flows are configured ON/OFF using RBS MOM parameter IubDataStreams:: schHsFlowControlOnOff.

Data Source

NodeB

Source Field

pmHsDataFramesReceivedSpi05

Source Section

IubDataStreams

pmHsDataFrmsRxSpi06

The total number of high-speed data frames received by the RBS over the Iub interface. Each counter observes a specific Schedular Priority Index (SPI). The different flows are configured ON/OFF using RBS MOM parameter IubDataStreams:: schHsFlowControlOnOff.

Data Source

NodeB

Source Field

pmHsDataFramesReceivedSpi06

Source Section

IubDataStreams

pmHsDataFrmsRxSpi07

The total number of high-speed data frames received by the RBS over the Iub interface. Each counter observes a specific Schedular Priority Index (SPI). The different flows are configured ON/OFF using RBS MOM parameter IubDataStreams:: schHsFlowControlOnOff.

Data Source

NodeB

Source Field

pmHsDataFramesReceivedSpi07

Source Section

IubDataStreams

pmHsDataFrmsRxSpi08

The total number of high-speed data frames received by the RBS over the Iub interface. Each counter observes a specific Schedular Priority Index (SPI). The different flows are configured ON/OFF using RBS MOM parameter IubDataStreams:: schHsFlowControlOnOff.

Data Source

NodeB

Source Field

pmHsDataFramesReceivedSpi08

Source Section

IubDataStreams

pmHsDataFrmsRxSpi09

The total number of high-speed data frames received by the RBS over the Iub interface. Each counter observes a specific Schedular Priority Index (SPI). The different flows are configured ON/OFF using RBS MOM parameter IubDataStreams:: schHsFlowControlOnOff.

Data Source

NodeB

Source Field

pmHsDataFramesReceivedSpi09

Source Section

IubDataStreams

pmHsDataFrmsRxSpi10

The total number of high-speed data frames received by the RBS over the Iub interface. Each counter observes a specific Schedular Priority Index (SPI). The different flows are configured ON/OFF using RBS MOM parameter IubDataStreams:: schHsFlowControlOnOff.

Data Source

NodeB

Source Field

pmHsDataFramesReceivedSpi10

Source Section

IubDataStreams

pmHsDataFrmsRxSpi11

The total number of high-speed data frames received by the RBS over the Iub interface. Each counter observes a specific Schedular Priority Index (SPI). The different flows are configured ON/OFF using RBS MOM parameter IubDataStreams:: schHsFlowControlOnOff.

Data Source

NodeB

Source Field

pmHsDataFramesReceivedSpi11

Source Section

IubDataStreams

pmHsDataFrmsRxSpi12

The total number of high-speed data frames received by the RBS over the Iub interface. Each counter observes a specific Schedular Priority Index (SPI). The different flows are configured ON/OFF using RBS MOM parameter IubDataStreams:: schHsFlowControlOnOff.

Data Source

NodeB

Source Field

pmHsDataFramesReceivedSpi12

Source Section

IubDataStreams

pmHsDataFrmsRxSpi13

The total number of high-speed data frames received by the RBS over the Iub interface. Each counter observes a specific Schedular Priority Index (SPI). The different flows are configured ON/OFF using RBS MOM parameter IubDataStreams:: schHsFlowControlOnOff.

Data Source

NodeB

Source Field

pmHsDataFramesReceivedSpi13

Source Section

IubDataStreams

pmHsDataFrmsRxSpi14

The total number of high-speed data frames received by the RBS over the Iub interface. Each counter observes a specific Schedular Priority Index (SPI). The different flows are configured ON/OFF using RBS MOM parameter IubDataStreams:: schHsFlowControlOnOff.

Data Source

NodeB

Source Field

pmHsDataFramesReceivedSpi14

Source Section

IubDataStreams

pmHsDataFrmsRxSpi15

The total number of high-speed data frames received by the RBS over the Iub interface. Each counter observes a specific Schedular Priority Index (SPI). The different flows are configured ON/OFF using RBS MOM parameter IubDataStreams:: schHsFlowControlOnOff.

Data Source

NodeB

Source Field

pmHsDataFramesReceivedSpi15

Source Section

IubDataStreams

pmHsDtFrDelayIubSpi00_01

This PDF gives the dynamic delay for all defined scheduled HS-DSCH data frame flows carried over Iub. This is needed as the basis for adjusting the hsDataFrameDelayThreshold attribute. Each counter observes a specific SPI. The different flows are configured ON/OFF using RBS MOM parameter IubDataStreams::schHsFlowControlOnOff.

Data Source

NodeB

Source Field

pmHsDataFrameDelayIubSpi00

Source Section

IubDataStreams

pmHsDtFrDelayIubSpi00_02

This PDF gives the dynamic delay for all defined scheduled HS-DSCH data frame flows carried over Iub. This is needed as the basis for adjusting the hsDataFrameDelayThreshold attribute. Each counter observes a specific SPI. The different flows are configured ON/OFF using RBS MOM parameter IubDataStreams::schHsFlowControlOnOff.

Data Source

NodeB

Source Field

pmHsDataFrameDelayIubSpi00

Source Section

IubDataStreams

pmHsDtFrDelayIubSpi00_03

This PDF gives the dynamic delay for all defined scheduled HS-DSCH data frame flows carried over Iub. This is needed as the basis for adjusting the hsDataFrameDelayThreshold attribute. Each counter observes a specific SPI. The different flows are configured ON/OFF using RBS MOM parameter IubDataStreams::schHsFlowControlOnOff.

Data Source

NodeB

Source Field

pmHsDataFrameDelayIubSpi00

Source Section

IubDataStreams

pmHsDtFrDelayIubSpi00_04

This PDF gives the dynamic delay for all defined scheduled HS-DSCH data frame flows carried over Iub. This is needed as the basis for adjusting the hsDataFrameDelayThreshold attribute. Each counter observes a specific SPI. The different flows are configured ON/OFF using RBS MOM parameter IubDataStreams::schHsFlowControlOnOff.

Data Source

NodeB

Source Field

pmHsDataFrameDelayIubSpi00

Source Section

IubDataStreams

pmHsDtFrDelayIubSpi00_05

This PDF gives the dynamic delay for all defined scheduled HS-DSCH data frame flows carried over Iub. This is needed as the basis for adjusting the hsDataFrameDelayThreshold attribute. Each counter observes a specific SPI. The different flows are configured ON/OFF using RBS MOM parameter IubDataStreams::schHsFlowControlOnOff.

Data Source

NodeB

Source Field

pmHsDataFrameDelayIubSpi00

Source Section

IubDataStreams

pmHsDtFrDelayIubSpi00_06

This PDF gives the dynamic delay for all defined scheduled HS-DSCH data frame flows carried over Iub. This is needed as the basis for adjusting the hsDataFrameDelayThreshold attribute. Each counter observes a specific SPI. The different flows are configured ON/OFF using RBS MOM parameter IubDataStreams::schHsFlowControlOnOff.

Data Source

NodeB

Source Field

pmHsDataFrameDelayIubSpi00

Source Section

IubDataStreams

pmHsDtFrDelayIubSpi00_07

This PDF gives the dynamic delay for all defined scheduled HS-DSCH data frame flows carried over Iub. This is needed as the basis for adjusting the hsDataFrameDelayThreshold attribute. Each counter observes a specific SPI. The different flows are configured ON/OFF using RBS MOM parameter IubDataStreams::schHsFlowControlOnOff.

Data Source

NodeB

Source Field

pmHsDataFrameDelayIubSpi00

Source Section

IubDataStreams

pmHsDtFrDelayIubSpi00_08

This PDF gives the dynamic delay for all defined scheduled HS-DSCH data frame flows carried over Iub. This is needed as the basis for adjusting the hsDataFrameDelayThreshold attribute. Each counter observes a specific SPI. The different flows are configured ON/OFF using RBS MOM parameter IubDataStreams::schHsFlowControlOnOff.

Data Source

NodeB

Source Field

pmHsDataFrameDelayIubSpi00

Source Section

IubDataStreams

pmHsDtFrDelayIubSpi00_09

This PDF gives the dynamic delay for all defined scheduled HS-DSCH data frame flows carried over Iub. This is needed as the basis for adjusting the hsDataFrameDelayThreshold attribute. Each counter observes a specific SPI. The different flows are configured ON/OFF using RBS MOM parameter IubDataStreams::schHsFlowControlOnOff.

Data Source

NodeB

Source Field

pmHsDataFrameDelayIubSpi00

Source Section

IubDataStreams

pmHsDtFrDelayIubSpi00_10

This PDF gives the dynamic delay for all defined scheduled HS-DSCH data frame flows carried over Iub. This is needed as the basis for adjusting the hsDataFrameDelayThreshold attribute. Each counter observes a specific SPI. The different flows are configured ON/OFF using RBS MOM parameter IubDataStreams::schHsFlowControlOnOff.

Data Source

NodeB

Source Field

pmHsDataFrameDelayIubSpi00

Source Section

IubDataStreams

pmHsDtFrDelayIubSpi00_11

This PDF gives the dynamic delay for all defined scheduled HS-DSCH data frame flows carried over Iub. This is needed as the basis for adjusting the hsDataFrameDelayThreshold attribute. Each counter observes a specific SPI. The different flows are configured ON/OFF using RBS MOM parameter IubDataStreams::schHsFlowControlOnOff.

Data Source

NodeB

Source Field

pmHsDataFrameDelayIubSpi00

Source Section

IubDataStreams

pmHsDtFrDelayIubSpi00_12

This PDF gives the dynamic delay for all defined scheduled HS-DSCH data frame flows carried over Iub. This is needed as the basis for adjusting the hsDataFrameDelayThreshold attribute.

Each counter observes a specific SPI. The different flows are configured ON/OFF using RBS MOM parameter IubDataStreams::schHsFlowControlOnOff.

Data Source

NodeB

Source Field

pmHsDataFrameDelayIubSpi00

Source Section

IubDataStreams

pmHsDtFrDelayIubSpi00_13

This PDF gives the dynamic delay for all defined scheduled HS-DSCH data frame flows carried over Iub. This is needed as the basis for adjusting the hsDataFrameDelayThreshold attribute. Each counter observes a specific SPI. The different flows are configured ON/OFF using RBS MOM parameter IubDataStreams::schHsFlowControlOnOff.

Data Source

NodeB

Source Field

pmHsDataFrameDelayIubSpi00

Source Section

IubDataStreams

pmHsDtFrDelayIubSpi00_14

This PDF gives the dynamic delay for all defined scheduled HS-DSCH data frame flows carried over Iub. This is needed as the basis for adjusting the hsDataFrameDelayThreshold attribute. Each counter observes a specific SPI. The different flows are configured ON/OFF using RBS MOM parameter IubDataStreams::schHsFlowControlOnOff.

Data Source

NodeB

Source Field

pmHsDataFrameDelayIubSpi00

Source Section

IubDataStreams

pmHsDtFrDelayIubSpi00_15

This PDF gives the dynamic delay for all defined scheduled HS-DSCH data frame flows carried over Iub. This is needed as the basis for adjusting the hsDataFrameDelayThreshold attribute. Each counter observes a specific SPI. The different flows are configured ON/OFF using RBS MOM parameter IubDataStreams::schHsFlowControlOnOff.

Data Source

NodeB

Source Field

pmHsDataFrameDelayIubSpi00

Source Section

IubDataStreams

pmHsDtFrDelayIubSpi00_16

This PDF gives the dynamic delay for all defined scheduled HS-DSCH data frame flows carried over Iub. This is needed as the basis for adjusting the hsDataFrameDelayThreshold attribute. Each counter observes a specific SPI. The different flows are configured ON/OFF using RBS MOM parameter IubDataStreams::schHsFlowControlOnOff.

Data Source

NodeB

Source Field

pmHsDataFrameDelayIubSpi00

Source Section

IubDataStreams

pmHsDtFrDelayIubSpi01_01

This PDF gives the dynamic delay for all defined scheduled HS-DSCH data frame flows carried over Iub. This is needed as the basis for adjusting the hsDataFrameDelayThreshold attribute. Each counter observes a specific SPI. The different flows are configured ON/OFF using RBS MOM parameter IubDataStreams::schHsFlowControlOnOff.

Data Source

NodeB

Source Field

pmHsDataFrameDelayIubSpi01

Source Section

IubDataStreams

pmHsDtFrDelayIubSpi01_02

This PDF gives the dynamic delay for all defined scheduled HS-DSCH data frame flows carried over Iub. This is needed as the basis for adjusting the hsDataFrameDelayThreshold attribute. Each counter observes a specific SPI. The different flows are configured ON/OFF using RBS MOM parameter IubDataStreams::schHsFlowControlOnOff.

Data Source

NodeB

Source Field

pmHsDataFrameDelayIubSpi01

Source Section

IubDataStreams

pmHsDtFrDelayIubSpi01_03

This PDF gives the dynamic delay for all defined scheduled HS-DSCH data frame flows carried over Iub. This is needed as the basis for adjusting the hsDataFrameDelayThreshold attribute. Each counter observes a specific SPI. The different flows are configured ON/OFF using RBS MOM parameter IubDataStreams::schHsFlowControlOnOff.

Data Source

NodeB

Source Field

pmHsDataFrameDelayIubSpi01

Source Section

IubDataStreams

pmHsDtFrDelayIubSpi01_04

This PDF gives the dynamic delay for all defined scheduled HS-DSCH data frame flows carried over Iub. This is needed as the basis for adjusting the hsDataFrameDelayThreshold attribute. Each counter observes a specific SPI. The different flows are configured ON/OFF using RBS MOM parameter IubDataStreams::schHsFlowControlOnOff.

Data Source

NodeB

Source Field

pmHsDataFrameDelayIubSpi01

Source Section

IubDataStreams

pmHsDtFrDelayIubSpi01_05

This PDF gives the dynamic delay for all defined scheduled HS-DSCH data frame flows carried over Iub. This is needed as the basis for adjusting the hsDataFrameDelayThreshold attribute. Each counter observes a specific SPI. The different flows are configured ON/OFF using RBS MOM parameter IubDataStreams::schHsFlowControlOnOff.

Data Source

NodeB

Source Field

pmHsDataFrameDelayIubSpi01

Source Section

IubDataStreams

pmHsDtFrDelayIubSpi01_06

This PDF gives the dynamic delay for all defined scheduled HS-DSCH data frame flows carried over Iub. This is needed as the basis for adjusting the hsDataFrameDelayThreshold attribute. Each counter observes a specific SPI. The different flows are configured ON/OFF using RBS MOM parameter IubDataStreams::schHsFlowControlOnOff.

Data Source

NodeB

Source Field

pmHsDataFrameDelayIubSpi01

Source Section

IubDataStreams

pmHsDtFrDelayIubSpi01_07

This PDF gives the dynamic delay for all defined scheduled HS-DSCH data frame flows carried over Iub. This is needed as the basis for adjusting the hsDataFrameDelayThreshold attribute. Each counter observes a specific SPI. The different flows are configured ON/OFF using RBS MOM parameter IubDataStreams::schHsFlowControlOnOff.

Data Source

NodeB

Source Field

pmHsDataFrameDelayIubSpi01

Source Section

IubDataStreams

pmHsDtFrDelayIubSpi01_08

This PDF gives the dynamic delay for all defined scheduled HS-DSCH data frame flows carried over Iub. This is needed as the basis for adjusting the hsDataFrameDelayThreshold attribute. Each counter observes a specific SPI. The different flows are configured ON/OFF using RBS MOM parameter IubDataStreams::schHsFlowControlOnOff.

Data Source

NodeB

Source Field

pmHsDataFrameDelayIubSpi01

Source Section

IubDataStreams

pmHsDtFrDelayIubSpi01_09

This PDF gives the dynamic delay for all defined scheduled HS-DSCH data frame flows carried over Iub. This is needed as the basis for adjusting the hsDataFrameDelayThreshold attribute.

Each counter observes a specific SPI. The different flows are configured ON/OFF using RBS MOM parameter IubDataStreams::schHsFlowControlOnOff.

Data Source

NodeB

Source Field

pmHsDataFrameDelayIubSpi01

Source Section

IubDataStreams

pmHsDtFrDelayIubSpi01_10

This PDF gives the dynamic delay for all defined scheduled HS-DSCH data frame flows carried over Iub. This is needed as the basis for adjusting the hsDataFrameDelayThreshold attribute. Each counter observes a specific SPI. The different flows are configured ON/OFF using RBS MOM parameter IubDataStreams::schHsFlowControlOnOff.

Data Source

NodeB

Source Field

pmHsDataFrameDelayIubSpi01

Source Section

IubDataStreams

pmHsDtFrDelayIubSpi01_11

This PDF gives the dynamic delay for all defined scheduled HS-DSCH data frame flows carried over Iub. This is needed as the basis for adjusting the hsDataFrameDelayThreshold attribute. Each counter observes a specific SPI. The different flows are configured ON/OFF using RBS MOM parameter IubDataStreams::schHsFlowControlOnOff.

Data Source

NodeB

Source Field

pmHsDataFrameDelayIubSpi01

Source Section

IubDataStreams

pmHsDtFrDelayIubSpi01_12

This PDF gives the dynamic delay for all defined scheduled HS-DSCH data frame flows carried over Iub. This is needed as the basis for adjusting the hsDataFrameDelayThreshold attribute. Each counter observes a specific SPI. The different flows are configured ON/OFF using RBS MOM parameter IubDataStreams::schHsFlowControlOnOff.

Data Source

NodeB

Source Field

pmHsDataFrameDelayIubSpi01

Source Section

IubDataStreams

pmHsDtFrDelayIubSpi01_13

This PDF gives the dynamic delay for all defined scheduled HS-DSCH data frame flows carried over Iub. This is needed as the basis for adjusting the hsDataFrameDelayThreshold attribute. Each counter observes a specific SPI. The different flows are configured ON/OFF using RBS MOM parameter IubDataStreams::schHsFlowControlOnOff.

Data Source

NodeB

Source Field

pmHsDataFrameDelayIubSpi01

Source Section

IubDataStreams

pmHsDtFrDelayIubSpi01_14

This PDF gives the dynamic delay for all defined scheduled HS-DSCH data frame flows carried over Iub. This is needed as the basis for adjusting the hsDataFrameDelayThreshold attribute. Each counter observes a specific SPI. The different flows are configured ON/OFF using RBS MOM parameter IubDataStreams::schHsFlowControlOnOff.

Data Source

NodeB

Source Field

pmHsDataFrameDelayIubSpi01

Source Section

IubDataStreams

pmHsDtFrDelayIubSpi01_15

This PDF gives the dynamic delay for all defined scheduled HS-DSCH data frame flows carried over Iub. This is needed as the basis for adjusting the hsDataFrameDelayThreshold attribute. Each counter observes a specific SPI. The different flows are configured ON/OFF using RBS MOM parameter IubDataStreams::schHsFlowControlOnOff.

Data Source

NodeB

Source Field

pmHsDataFrameDelayIubSpi01

Source Section

IubDataStreams

pmHsDtFrDelayIubSpi01_16

This PDF gives the dynamic delay for all defined scheduled HS-DSCH data frame flows carried over Iub. This is needed as the basis for adjusting the hsDataFrameDelayThreshold attribute. Each counter observes a specific SPI. The different flows are configured ON/OFF using RBS MOM parameter IubDataStreams::schHsFlowControlOnOff.

Data Source

NodeB

Source Field

pmHsDataFrameDelayIubSpi01

Source Section

IubDataStreams

pmHsDtFrDelayIubSpi02_01

This PDF gives the dynamic delay for all defined scheduled HS-DSCH data frame flows carried over Iub. This is needed as the basis for adjusting the hsDataFrameDelayThreshold attribute. Each counter observes a specific SPI. The different flows are configured ON/OFF using RBS MOM parameter IubDataStreams::schHsFlowControlOnOff.

Data Source

NodeB

Source Field

pmHsDataFrameDelayIubSpi02

Source Section

IubDataStreams

pmHsDtFrDelayIubSpi02_02

This PDF gives the dynamic delay for all defined scheduled HS-DSCH data frame flows carried over Iub. This is needed as the basis for adjusting the hsDataFrameDelayThreshold attribute. Each counter observes a specific SPI. The different flows are configured ON/OFF using RBS MOM parameter IubDataStreams::schHsFlowControlOnOff.

Data Source

NodeB

Source Field

pmHsDataFrameDelayIubSpi02

Source Section

IubDataStreams

pmHsDtFrDelayIubSpi02_03

This PDF gives the dynamic delay for all defined scheduled HS-DSCH data frame flows carried over Iub. This is needed as the basis for adjusting the hsDataFrameDelayThreshold attribute. Each counter observes a specific SPI. The different flows are configured ON/OFF using RBS MOM parameter IubDataStreams::schHsFlowControlOnOff.

Data Source

NodeB

Source Field

pmHsDataFrameDelayIubSpi02

Source Section

IubDataStreams

pmHsDtFrDelayIubSpi02_04

This PDF gives the dynamic delay for all defined scheduled HS-DSCH data frame flows carried over Iub. This is needed as the basis for adjusting the hsDataFrameDelayThreshold attribute. Each counter observes a specific SPI. The different flows are configured ON/OFF using RBS MOM parameter IubDataStreams::schHsFlowControlOnOff.

Data Source

NodeB

Source Field

pmHsDataFrameDelayIubSpi02

Source Section

IubDataStreams

pmHsDtFrDelayIubSpi02_05

This PDF gives the dynamic delay for all defined scheduled HS-DSCH data frame flows carried over Iub. This is needed as the basis for adjusting the hsDataFrameDelayThreshold attribute. Each counter observes a specific SPI. The different flows are configured ON/OFF using RBS MOM parameter IubDataStreams::schHsFlowControlOnOff.

Data Source

NodeB

Source Field

pmHsDataFrameDelayIubSpi02

Source Section

IubDataStreams

pmHsDtFrDelayIubSpi02_06

This PDF gives the dynamic delay for all defined scheduled HS-DSCH data frame flows carried over Iub. This is needed as the basis for adjusting the hsDataFrameDelayThreshold attribute.

Each counter observes a specific SPI. The different flows are configured ON/OFF using RBS MOM parameter IubDataStreams::schHsFlowControlOnOff.

Data Source

NodeB

Source Field

pmHsDataFrameDelayIubSpi02

Source Section

IubDataStreams

pmHsDtFrDelayIubSpi02_07

This PDF gives the dynamic delay for all defined scheduled HS-DSCH data frame flows carried over Iub. This is needed as the basis for adjusting the hsDataFrameDelayThreshold attribute. Each counter observes a specific SPI. The different flows are configured ON/OFF using RBS MOM parameter IubDataStreams::schHsFlowControlOnOff.

Data Source

NodeB

Source Field

pmHsDataFrameDelayIubSpi02

Source Section

IubDataStreams

pmHsDtFrDelayIubSpi02_08

This PDF gives the dynamic delay for all defined scheduled HS-DSCH data frame flows carried over Iub. This is needed as the basis for adjusting the hsDataFrameDelayThreshold attribute. Each counter observes a specific SPI. The different flows are configured ON/OFF using RBS MOM parameter IubDataStreams::schHsFlowControlOnOff.

Data Source

NodeB

Source Field

pmHsDataFrameDelayIubSpi02

Source Section

IubDataStreams

pmHsDtFrDelayIubSpi02_09

This PDF gives the dynamic delay for all defined scheduled HS-DSCH data frame flows carried over Iub. This is needed as the basis for adjusting the hsDataFrameDelayThreshold attribute. Each counter observes a specific SPI. The different flows are configured ON/OFF using RBS MOM parameter IubDataStreams::schHsFlowControlOnOff.

Data Source

NodeB

Source Field

pmHsDataFrameDelayIubSpi02

Source Section

IubDataStreams

pmHsDtFrDelayIubSpi02_10

This PDF gives the dynamic delay for all defined scheduled HS-DSCH data frame flows carried over Iub. This is needed as the basis for adjusting the hsDataFrameDelayThreshold attribute. Each counter observes a specific SPI. The different flows are configured ON/OFF using RBS MOM parameter IubDataStreams::schHsFlowControlOnOff.

Data Source

NodeB

Source Field

pmHsDataFrameDelayIubSpi02

Source Section

IubDataStreams

pmHsDtFrDelayIubSpi02_11

This PDF gives the dynamic delay for all defined scheduled HS-DSCH data frame flows carried over Iub. This is needed as the basis for adjusting the hsDataFrameDelayThreshold attribute. Each counter observes a specific SPI. The different flows are configured ON/OFF using RBS MOM parameter IubDataStreams::schHsFlowControlOnOff.

Data Source

NodeB

Source Field

pmHsDataFrameDelayIubSpi02

Source Section

IubDataStreams

pmHsDtFrDelayIubSpi02_12

This PDF gives the dynamic delay for all defined scheduled HS-DSCH data frame flows carried over Iub. This is needed as the basis for adjusting the hsDataFrameDelayThreshold attribute. Each counter observes a specific SPI. The different flows are configured ON/OFF using RBS MOM parameter IubDataStreams::schHsFlowControlOnOff.

Data Source

NodeB

Source Field

pmHsDataFrameDelayIubSpi02

Source Section

IubDataStreams

pmHsDtFrDelayIubSpi02_13

This PDF gives the dynamic delay for all defined scheduled HS-DSCH data frame flows carried over Iub. This is needed as the basis for adjusting the hsDataFrameDelayThreshold attribute. Each counter observes a specific SPI. The different flows are configured ON/OFF using RBS MOM parameter IubDataStreams::schHsFlowControlOnOff.

Data Source

NodeB

Source Field

pmHsDataFrameDelayIubSpi02

Source Section

IubDataStreams

pmHsDtFrDelayIubSpi02_14

This PDF gives the dynamic delay for all defined scheduled HS-DSCH data frame flows carried over Iub. This is needed as the basis for adjusting the hsDataFrameDelayThreshold attribute. Each counter observes a specific SPI. The different flows are configured ON/OFF using RBS MOM parameter IubDataStreams::schHsFlowControlOnOff.

Data Source

NodeB

Source Field

pmHsDataFrameDelayIubSpi02

Source Section

IubDataStreams

pmHsDtFrDelayIubSpi02_15

This PDF gives the dynamic delay for all defined scheduled HS-DSCH data frame flows carried over Iub. This is needed as the basis for adjusting the hsDataFrameDelayThreshold attribute. Each counter observes a specific SPI. The different flows are configured ON/OFF using RBS MOM parameter IubDataStreams::schHsFlowControlOnOff.

Data Source

NodeB

Source Field

pmHsDataFrameDelayIubSpi02

Source Section

IubDataStreams

pmHsDtFrDelayIubSpi02_16

This PDF gives the dynamic delay for all defined scheduled HS-DSCH data frame flows carried over Iub. This is needed as the basis for adjusting the hsDataFrameDelayThreshold attribute. Each counter observes a specific SPI. The different flows are configured ON/OFF using RBS MOM parameter IubDataStreams::schHsFlowControlOnOff.

Data Source

NodeB

Source Field

pmHsDataFrameDelayIubSpi02

Source Section

IubDataStreams

pmHsDtFrDelayIubSpi03_01

This PDF gives the dynamic delay for all defined scheduled HS-DSCH data frame flows carried over Iub. This is needed as the basis for adjusting the hsDataFrameDelayThreshold attribute. Each counter observes a specific SPI. The different flows are configured ON/OFF using RBS MOM parameter IubDataStreams::schHsFlowControlOnOff.

Data Source

NodeB

Source Field

pmHsDataFrameDelayIubSpi03

Source Section

IubDataStreams

pmHsDtFrDelayIubSpi03_02

This PDF gives the dynamic delay for all defined scheduled HS-DSCH data frame flows carried over Iub. This is needed as the basis for adjusting the hsDataFrameDelayThreshold attribute. Each counter observes a specific SPI. The different flows are configured ON/OFF using RBS MOM parameter IubDataStreams::schHsFlowControlOnOff.

Data Source

NodeB

Source Field

pmHsDataFrameDelayIubSpi03

Source Section

IubDataStreams

pmHsDtFrDelayIubSpi03_03

This PDF gives the dynamic delay for all defined scheduled HS-DSCH data frame flows carried over Iub. This is needed as the basis for adjusting the hsDataFrameDelayThreshold attribute.

Each counter observes a specific SPI. The different flows are configured ON/OFF using RBS MOM parameter IubDataStreams::schHsFlowControlOnOff.

Data Source

NodeB

Source Field

pmHsDataFrameDelayIubSpi03

Source Section

IubDataStreams

pmHsDtFrDelayIubSpi03_04

This PDF gives the dynamic delay for all defined scheduled HS-DSCH data frame flows carried over Iub. This is needed as the basis for adjusting the hsDataFrameDelayThreshold attribute. Each counter observes a specific SPI. The different flows are configured ON/OFF using RBS MOM parameter IubDataStreams::schHsFlowControlOnOff.

Data Source

NodeB

Source Field

pmHsDataFrameDelayIubSpi03

Source Section

IubDataStreams

pmHsDtFrDelayIubSpi03_05

This PDF gives the dynamic delay for all defined scheduled HS-DSCH data frame flows carried over Iub. This is needed as the basis for adjusting the hsDataFrameDelayThreshold attribute. Each counter observes a specific SPI. The different flows are configured ON/OFF using RBS MOM parameter IubDataStreams::schHsFlowControlOnOff.

Data Source

NodeB

Source Field

pmHsDataFrameDelayIubSpi03

Source Section

IubDataStreams

pmHsDtFrDelayIubSpi03_06

This PDF gives the dynamic delay for all defined scheduled HS-DSCH data frame flows carried over Iub. This is needed as the basis for adjusting the hsDataFrameDelayThreshold attribute. Each counter observes a specific SPI. The different flows are configured ON/OFF using RBS MOM parameter IubDataStreams::schHsFlowControlOnOff.

Data Source

NodeB

Source Field

pmHsDataFrameDelayIubSpi03

Source Section

IubDataStreams

pmHsDtFrDelayIubSpi03_07

This PDF gives the dynamic delay for all defined scheduled HS-DSCH data frame flows carried over Iub. This is needed as the basis for adjusting the hsDataFrameDelayThreshold attribute. Each counter observes a specific SPI. The different flows are configured ON/OFF using RBS MOM parameter IubDataStreams::schHsFlowControlOnOff.

Data Source

NodeB

Source Field

pmHsDataFrameDelayIubSpi03

Source Section

IubDataStreams

pmHsDtFrDelayIubSpi03_08

This PDF gives the dynamic delay for all defined scheduled HS-DSCH data frame flows carried over Iub. This is needed as the basis for adjusting the hsDataFrameDelayThreshold attribute. Each counter observes a specific SPI. The different flows are configured ON/OFF using RBS MOM parameter IubDataStreams::schHsFlowControlOnOff.

Data Source

NodeB

Source Field

pmHsDataFrameDelayIubSpi03

Source Section

IubDataStreams

pmHsDtFrDelayIubSpi03_09

This PDF gives the dynamic delay for all defined scheduled HS-DSCH data frame flows carried over Iub. This is needed as the basis for adjusting the hsDataFrameDelayThreshold attribute. Each counter observes a specific SPI. The different flows are configured ON/OFF using RBS MOM parameter IubDataStreams::schHsFlowControlOnOff.

Data Source

NodeB

Source Field

pmHsDataFrameDelayIubSpi03

Source Section

IubDataStreams

pmHsDtFrDelayIubSpi03_10

This PDF gives the dynamic delay for all defined scheduled HS-DSCH data frame flows carried over Iub. This is needed as the basis for adjusting the hsDataFrameDelayThreshold attribute. Each counter observes a specific SPI. The different flows are configured ON/OFF using RBS MOM parameter IubDataStreams::schHsFlowControlOnOff.

Data Source

NodeB

Source Field

pmHsDataFrameDelayIubSpi03

Source Section

IubDataStreams

pmHsDtFrDelayIubSpi03_11

This PDF gives the dynamic delay for all defined scheduled HS-DSCH data frame flows carried over Iub. This is needed as the basis for adjusting the hsDataFrameDelayThreshold attribute. Each counter observes a specific SPI. The different flows are configured ON/OFF using RBS MOM parameter IubDataStreams::schHsFlowControlOnOff.

Data Source

NodeB

Source Field

pmHsDataFrameDelayIubSpi03

Source Section

IubDataStreams

pmHsDtFrDelayIubSpi03_12

This PDF gives the dynamic delay for all defined scheduled HS-DSCH data frame flows carried over Iub. This is needed as the basis for adjusting the hsDataFrameDelayThreshold attribute. Each counter observes a specific SPI. The different flows are configured ON/OFF using RBS MOM parameter IubDataStreams::schHsFlowControlOnOff.

Data Source

NodeB

Source Field

pmHsDataFrameDelayIubSpi03

Source Section

IubDataStreams

pmHsDtFrDelayIubSpi03_13

This PDF gives the dynamic delay for all defined scheduled HS-DSCH data frame flows carried over Iub. This is needed as the basis for adjusting the hsDataFrameDelayThreshold attribute. Each counter observes a specific SPI. The different flows are configured ON/OFF using RBS MOM parameter IubDataStreams::schHsFlowControlOnOff.

Data Source

NodeB

Source Field

pmHsDataFrameDelayIubSpi03

Source Section

IubDataStreams

pmHsDtFrDelayIubSpi03_14

This PDF gives the dynamic delay for all defined scheduled HS-DSCH data frame flows carried over Iub. This is needed as the basis for adjusting the hsDataFrameDelayThreshold attribute. Each counter observes a specific SPI. The different flows are configured ON/OFF using RBS MOM parameter IubDataStreams::schHsFlowControlOnOff.

Data Source

NodeB

Source Field

pmHsDataFrameDelayIubSpi03

Source Section

IubDataStreams

pmHsDtFrDelayIubSpi03_15

This PDF gives the dynamic delay for all defined scheduled HS-DSCH data frame flows carried over Iub. This is needed as the basis for adjusting the hsDataFrameDelayThreshold attribute. Each counter observes a specific SPI. The different flows are configured ON/OFF using RBS MOM parameter IubDataStreams::schHsFlowControlOnOff.

Data Source

NodeB

Source Field

pmHsDataFrameDelayIubSpi03

Source Section

IubDataStreams

pmHsDtFrDelayIubSpi03_16

This PDF gives the dynamic delay for all defined scheduled HS-DSCH data frame flows carried over Iub. This is needed as the basis for adjusting the hsDataFrameDelayThreshold attribute.

Each counter observes a specific SPI. The different flows are configured ON/OFF using RBS MOM parameter IubDataStreams::schHsFlowControlOnOff.

Data Source

NodeB

Source Field

pmHsDataFrameDelayIubSpi03

Source Section

IubDataStreams

pmHsDtFrDelayIubSpi04_01

This PDF gives the dynamic delay for all defined scheduled HS-DSCH data frame flows carried over Iub. This is needed as the basis for adjusting the hsDataFrameDelayThreshold attribute. Each counter observes a specific SPI. The different flows are configured ON/OFF using RBS MOM parameter IubDataStreams::schHsFlowControlOnOff.

Data Source

NodeB

Source Field

pmHsDataFrameDelayIubSpi04

Source Section

IubDataStreams

pmHsDtFrDelayIubSpi04_02

This PDF gives the dynamic delay for all defined scheduled HS-DSCH data frame flows carried over Iub. This is needed as the basis for adjusting the hsDataFrameDelayThreshold attribute. Each counter observes a specific SPI. The different flows are configured ON/OFF using RBS MOM parameter IubDataStreams::schHsFlowControlOnOff.

Data Source

NodeB

Source Field

pmHsDataFrameDelayIubSpi04

Source Section

IubDataStreams

pmHsDtFrDelayIubSpi04_03

This PDF gives the dynamic delay for all defined scheduled HS-DSCH data frame flows carried over Iub. This is needed as the basis for adjusting the hsDataFrameDelayThreshold attribute. Each counter observes a specific SPI. The different flows are configured ON/OFF using RBS MOM parameter IubDataStreams::schHsFlowControlOnOff.

Data Source

NodeB

Source Field

pmHsDataFrameDelayIubSpi04

Source Section

IubDataStreams

pmHsDtFrDelayIubSpi04_04

This PDF gives the dynamic delay for all defined scheduled HS-DSCH data frame flows carried over Iub. This is needed as the basis for adjusting the hsDataFrameDelayThreshold attribute. Each counter observes a specific SPI. The different flows are configured ON/OFF using RBS MOM parameter IubDataStreams::schHsFlowControlOnOff.

Data Source

NodeB

Source Field

pmHsDataFrameDelayIubSpi04

Source Section

IubDataStreams

pmHsDtFrDelayIubSpi04_05

This PDF gives the dynamic delay for all defined scheduled HS-DSCH data frame flows carried over Iub. This is needed as the basis for adjusting the hsDataFrameDelayThreshold attribute. Each counter observes a specific SPI. The different flows are configured ON/OFF using RBS MOM parameter IubDataStreams::schHsFlowControlOnOff.

Data Source

NodeB

Source Field

pmHsDataFrameDelayIubSpi04

Source Section

IubDataStreams

pmHsDtFrDelayIubSpi04_06

This PDF gives the dynamic delay for all defined scheduled HS-DSCH data frame flows carried over Iub. This is needed as the basis for adjusting the hsDataFrameDelayThreshold attribute. Each counter observes a specific SPI. The different flows are configured ON/OFF using RBS MOM parameter IubDataStreams::schHsFlowControlOnOff.

Data Source

NodeB

Source Field

pmHsDataFrameDelayIubSpi04

Source Section

IubDataStreams

pmHsDtFrDelayIubSpi04_07

This PDF gives the dynamic delay for all defined scheduled HS-DSCH data frame flows carried over Iub. This is needed as the basis for adjusting the hsDataFrameDelayThreshold attribute. Each counter observes a specific SPI. The different flows are configured ON/OFF using RBS MOM parameter IubDataStreams::schHsFlowControlOnOff.

Data Source

NodeB

Source Field

pmHsDataFrameDelayIubSpi04

Source Section

IubDataStreams

pmHsDtFrDelayIubSpi04_08

This PDF gives the dynamic delay for all defined scheduled HS-DSCH data frame flows carried over Iub. This is needed as the basis for adjusting the hsDataFrameDelayThreshold attribute. Each counter observes a specific SPI. The different flows are configured ON/OFF using RBS MOM parameter IubDataStreams::schHsFlowControlOnOff.

Data Source

NodeB

Source Field

pmHsDataFrameDelayIubSpi04

Source Section

IubDataStreams

pmHsDtFrDelayIubSpi04_09

This PDF gives the dynamic delay for all defined scheduled HS-DSCH data frame flows carried over Iub. This is needed as the basis for adjusting the hsDataFrameDelayThreshold attribute. Each counter observes a specific SPI. The different flows are configured ON/OFF using RBS MOM parameter IubDataStreams::schHsFlowControlOnOff.

Data Source

NodeB

Source Field

pmHsDataFrameDelayIubSpi04

Source Section

IubDataStreams

pmHsDtFrDelayIubSpi04_10

This PDF gives the dynamic delay for all defined scheduled HS-DSCH data frame flows carried over Iub. This is needed as the basis for adjusting the hsDataFrameDelayThreshold attribute. Each counter observes a specific SPI. The different flows are configured ON/OFF using RBS MOM parameter IubDataStreams::schHsFlowControlOnOff.

Data Source

NodeB

Source Field

pmHsDataFrameDelayIubSpi04

Source Section

IubDataStreams

pmHsDtFrDelayIubSpi04_11

This PDF gives the dynamic delay for all defined scheduled HS-DSCH data frame flows carried over Iub. This is needed as the basis for adjusting the hsDataFrameDelayThreshold attribute. Each counter observes a specific SPI. The different flows are configured ON/OFF using RBS MOM parameter IubDataStreams::schHsFlowControlOnOff.

Data Source

NodeB

Source Field

pmHsDataFrameDelayIubSpi04

Source Section

IubDataStreams

pmHsDtFrDelayIubSpi04_12

This PDF gives the dynamic delay for all defined scheduled HS-DSCH data frame flows carried over Iub. This is needed as the basis for adjusting the hsDataFrameDelayThreshold attribute. Each counter observes a specific SPI. The different flows are configured ON/OFF using RBS MOM parameter IubDataStreams::schHsFlowControlOnOff.

Data Source

NodeB

Source Field

pmHsDataFrameDelayIubSpi04

Source Section

IubDataStreams

pmHsDtFrDelayIubSpi04_13

This PDF gives the dynamic delay for all defined scheduled HS-DSCH data frame flows carried over Iub. This is needed as the basis for adjusting the hsDataFrameDelayThreshold attribute.

Each counter observes a specific SPI. The different flows are configured ON/OFF using RBS MOM parameter IubDataStreams::schHsFlowControlOnOff.

Data Source

NodeB

Source Field

pmHsDataFrameDelayIubSpi04

Source Section

IubDataStreams

pmHsDtFrDelayIubSpi04_14

This PDF gives the dynamic delay for all defined scheduled HS-DSCH data frame flows carried over Iub. This is needed as the basis for adjusting the hsDataFrameDelayThreshold attribute. Each counter observes a specific SPI. The different flows are configured ON/OFF using RBS MOM parameter IubDataStreams::schHsFlowControlOnOff.

Data Source

NodeB

Source Field

pmHsDataFrameDelayIubSpi04

Source Section

IubDataStreams

pmHsDtFrDelayIubSpi04_15

This PDF gives the dynamic delay for all defined scheduled HS-DSCH data frame flows carried over Iub. This is needed as the basis for adjusting the hsDataFrameDelayThreshold attribute. Each counter observes a specific SPI. The different flows are configured ON/OFF using RBS MOM parameter IubDataStreams::schHsFlowControlOnOff.

Data Source

NodeB

Source Field

pmHsDataFrameDelayIubSpi04

Source Section

IubDataStreams

pmHsDtFrDelayIubSpi04_16

This PDF gives the dynamic delay for all defined scheduled HS-DSCH data frame flows carried over Iub. This is needed as the basis for adjusting the hsDataFrameDelayThreshold attribute. Each counter observes a specific SPI. The different flows are configured ON/OFF using RBS MOM parameter IubDataStreams::schHsFlowControlOnOff.

Data Source

NodeB

Source Field

pmHsDataFrameDelayIubSpi04

Source Section

IubDataStreams

pmHsDtFrDelayIubSpi05_01

This PDF gives the dynamic delay for all defined scheduled HS-DSCH data frame flows carried over Iub. This is needed as the basis for adjusting the hsDataFrameDelayThreshold attribute. Each counter observes a specific SPI. The different flows are configured ON/OFF using RBS MOM parameter IubDataStreams::schHsFlowControlOnOff.

Data Source

NodeB

Source Field

pmHsDataFrameDelayIubSpi05

Source Section

IubDataStreams

pmHsDtFrDelayIubSpi05_02

This PDF gives the dynamic delay for all defined scheduled HS-DSCH data frame flows carried over Iub. This is needed as the basis for adjusting the hsDataFrameDelayThreshold attribute. Each counter observes a specific SPI. The different flows are configured ON/OFF using RBS MOM parameter IubDataStreams::schHsFlowControlOnOff.

Data Source

NodeB

Source Field

pmHsDataFrameDelayIubSpi05

Source Section

IubDataStreams

pmHsDtFrDelayIubSpi05_03

This PDF gives the dynamic delay for all defined scheduled HS-DSCH data frame flows carried over Iub. This is needed as the basis for adjusting the hsDataFrameDelayThreshold attribute. Each counter observes a specific SPI. The different flows are configured ON/OFF using RBS MOM parameter IubDataStreams::schHsFlowControlOnOff.

Data Source

NodeB

Source Field

pmHsDataFrameDelayIubSpi05

Source Section

IubDataStreams

pmHsDtFrDelayIubSpi05_04

This PDF gives the dynamic delay for all defined scheduled HS-DSCH data frame flows carried over Iub. This is needed as the basis for adjusting the hsDataFrameDelayThreshold attribute. Each counter observes a specific SPI. The different flows are configured ON/OFF using RBS MOM parameter IubDataStreams::schHsFlowControlOnOff.

Data Source

NodeB

Source Field

pmHsDataFrameDelayIubSpi05

Source Section

IubDataStreams

pmHsDtFrDelayIubSpi05_05

This PDF gives the dynamic delay for all defined scheduled HS-DSCH data frame flows carried over Iub. This is needed as the basis for adjusting the hsDataFrameDelayThreshold attribute. Each counter observes a specific SPI. The different flows are configured ON/OFF using RBS MOM parameter IubDataStreams::schHsFlowControlOnOff.

Data Source

NodeB

Source Field

pmHsDataFrameDelayIubSpi05

Source Section

IubDataStreams

pmHsDtFrDelayIubSpi05_06

This PDF gives the dynamic delay for all defined scheduled HS-DSCH data frame flows carried over Iub. This is needed as the basis for adjusting the hsDataFrameDelayThreshold attribute. Each counter observes a specific SPI. The different flows are configured ON/OFF using RBS MOM parameter IubDataStreams::schHsFlowControlOnOff.

Data Source

NodeB

Source Field

pmHsDataFrameDelayIubSpi05

Source Section

IubDataStreams

pmHsDtFrDelayIubSpi05_07

This PDF gives the dynamic delay for all defined scheduled HS-DSCH data frame flows carried over Iub. This is needed as the basis for adjusting the hsDataFrameDelayThreshold attribute. Each counter observes a specific SPI. The different flows are configured ON/OFF using RBS MOM parameter IubDataStreams::schHsFlowControlOnOff.

Data Source

NodeB

Source Field

pmHsDataFrameDelayIubSpi05

Source Section

IubDataStreams

pmHsDtFrDelayIubSpi05_08

This PDF gives the dynamic delay for all defined scheduled HS-DSCH data frame flows carried over Iub. This is needed as the basis for adjusting the hsDataFrameDelayThreshold attribute. Each counter observes a specific SPI. The different flows are configured ON/OFF using RBS MOM parameter IubDataStreams::schHsFlowControlOnOff.

Data Source

NodeB

Source Field

pmHsDataFrameDelayIubSpi05

Source Section

IubDataStreams

pmHsDtFrDelayIubSpi05_09

This PDF gives the dynamic delay for all defined scheduled HS-DSCH data frame flows carried over Iub. This is needed as the basis for adjusting the hsDataFrameDelayThreshold attribute. Each counter observes a specific SPI. The different flows are configured ON/OFF using RBS MOM parameter IubDataStreams::schHsFlowControlOnOff.

Data Source

NodeB

Source Field

pmHsDataFrameDelayIubSpi05

Source Section

IubDataStreams

pmHsDtFrDelayIubSpi05_10

This PDF gives the dynamic delay for all defined scheduled HS-DSCH data frame flows carried over Iub. This is needed as the basis for adjusting the hsDataFrameDelayThreshold attribute.

Each counter observes a specific SPI. The different flows are configured ON/OFF using RBS MOM parameter IubDataStreams::schHsFlowControlOnOff.

Data Source

NodeB

Source Field

pmHsDataFrameDelayIubSpi05

Source Section

IubDataStreams

pmHsDtFrDelayIubSpi05_11

This PDF gives the dynamic delay for all defined scheduled HS-DSCH data frame flows carried over Iub. This is needed as the basis for adjusting the hsDataFrameDelayThreshold attribute. Each counter observes a specific SPI. The different flows are configured ON/OFF using RBS MOM parameter IubDataStreams::schHsFlowControlOnOff.

Data Source

NodeB

Source Field

pmHsDataFrameDelayIubSpi05

Source Section

IubDataStreams

pmHsDtFrDelayIubSpi05_12

This PDF gives the dynamic delay for all defined scheduled HS-DSCH data frame flows carried over Iub. This is needed as the basis for adjusting the hsDataFrameDelayThreshold attribute. Each counter observes a specific SPI. The different flows are configured ON/OFF using RBS MOM parameter IubDataStreams::schHsFlowControlOnOff.

Data Source

NodeB

Source Field

pmHsDataFrameDelayIubSpi05

Source Section

IubDataStreams

pmHsDtFrDelayIubSpi05_13

This PDF gives the dynamic delay for all defined scheduled HS-DSCH data frame flows carried over Iub. This is needed as the basis for adjusting the hsDataFrameDelayThreshold attribute. Each counter observes a specific SPI. The different flows are configured ON/OFF using RBS MOM parameter IubDataStreams::schHsFlowControlOnOff.

Data Source

NodeB

Source Field

pmHsDataFrameDelayIubSpi05

Source Section

IubDataStreams

pmHsDtFrDelayIubSpi05_14

This PDF gives the dynamic delay for all defined scheduled HS-DSCH data frame flows carried over Iub. This is needed as the basis for adjusting the hsDataFrameDelayThreshold attribute. Each counter observes a specific SPI. The different flows are configured ON/OFF using RBS MOM parameter IubDataStreams::schHsFlowControlOnOff.

Data Source

NodeB

Source Field

pmHsDataFrameDelayIubSpi05

Source Section

IubDataStreams

pmHsDtFrDelayIubSpi05_15

This PDF gives the dynamic delay for all defined scheduled HS-DSCH data frame flows carried over Iub. This is needed as the basis for adjusting the hsDataFrameDelayThreshold attribute. Each counter observes a specific SPI. The different flows are configured ON/OFF using RBS MOM parameter IubDataStreams::schHsFlowControlOnOff.

Data Source

NodeB

Source Field

pmHsDataFrameDelayIubSpi05

Source Section

IubDataStreams

pmHsDtFrDelayIubSpi05_16

This PDF gives the dynamic delay for all defined scheduled HS-DSCH data frame flows carried over Iub. This is needed as the basis for adjusting the hsDataFrameDelayThreshold attribute. Each counter observes a specific SPI. The different flows are configured ON/OFF using RBS MOM parameter IubDataStreams::schHsFlowControlOnOff.

Data Source

NodeB

Source Field

pmHsDataFrameDelayIubSpi05

Source Section

IubDataStreams

pmHsDtFrDelayIubSpi06_01

This PDF gives the dynamic delay for all defined scheduled HS-DSCH data frame flows carried over Iub. This is needed as the basis for adjusting the hsDataFrameDelayThreshold attribute. Each counter observes a specific SPI. The different flows are configured ON/OFF using RBS MOM parameter IubDataStreams::schHsFlowControlOnOff.

Data Source

NodeB

Source Field

pmHsDataFrameDelayIubSpi06

Source Section

IubDataStreams

pmHsDtFrDelayIubSpi06_02

This PDF gives the dynamic delay for all defined scheduled HS-DSCH data frame flows carried over Iub. This is needed as the basis for adjusting the hsDataFrameDelayThreshold attribute. Each counter observes a specific SPI. The different flows are configured ON/OFF using RBS MOM parameter IubDataStreams::schHsFlowControlOnOff.

Data Source

NodeB

Source Field

pmHsDataFrameDelayIubSpi06

Source Section

IubDataStreams

pmHsDtFrDelayIubSpi06_03

This PDF gives the dynamic delay for all defined scheduled HS-DSCH data frame flows carried over Iub. This is needed as the basis for adjusting the hsDataFrameDelayThreshold attribute. Each counter observes a specific SPI. The different flows are configured ON/OFF using RBS MOM parameter IubDataStreams::schHsFlowControlOnOff.

Data Source

NodeB

Source Field

pmHsDataFrameDelayIubSpi06

Source Section

IubDataStreams

pmHsDtFrDelayIubSpi06_04

This PDF gives the dynamic delay for all defined scheduled HS-DSCH data frame flows carried over Iub. This is needed as the basis for adjusting the hsDataFrameDelayThreshold attribute. Each counter observes a specific SPI. The different flows are configured ON/OFF using RBS MOM parameter IubDataStreams::schHsFlowControlOnOff.

Data Source

NodeB

Source Field

pmHsDataFrameDelayIubSpi06

Source Section

IubDataStreams

pmHsDtFrDelayIubSpi06_05

This PDF gives the dynamic delay for all defined scheduled HS-DSCH data frame flows carried over Iub. This is needed as the basis for adjusting the hsDataFrameDelayThreshold attribute. Each counter observes a specific SPI. The different flows are configured ON/OFF using RBS MOM parameter IubDataStreams::schHsFlowControlOnOff.

Data Source

NodeB

Source Field

pmHsDataFrameDelayIubSpi06

Source Section

IubDataStreams

pmHsDtFrDelayIubSpi06_06

This PDF gives the dynamic delay for all defined scheduled HS-DSCH data frame flows carried over Iub. This is needed as the basis for adjusting the hsDataFrameDelayThreshold attribute. Each counter observes a specific SPI. The different flows are configured ON/OFF using RBS MOM parameter IubDataStreams::schHsFlowControlOnOff.

Data Source

NodeB

Source Field

pmHsDataFrameDelayIubSpi06

Source Section

IubDataStreams

pmHsDtFrDelayIubSpi06_07

This PDF gives the dynamic delay for all defined scheduled HS-DSCH data frame flows carried over Iub. This is needed as the basis for adjusting the hsDataFrameDelayThreshold attribute.

Each counter observes a specific SPI. The different flows are configured ON/OFF using RBS MOM parameter IubDataStreams::schHsFlowControlOnOff.

Data Source

NodeB

Source Field

pmHsDataFrameDelayIubSpi06

Source Section

IubDataStreams

pmHsDtFrDelayIubSpi06_08

This PDF gives the dynamic delay for all defined scheduled HS-DSCH data frame flows carried over Iub. This is needed as the basis for adjusting the hsDataFrameDelayThreshold attribute. Each counter observes a specific SPI. The different flows are configured ON/OFF using RBS MOM parameter IubDataStreams::schHsFlowControlOnOff.

Data Source

NodeB

Source Field

pmHsDataFrameDelayIubSpi06

Source Section

IubDataStreams

pmHsDtFrDelayIubSpi06_09

This PDF gives the dynamic delay for all defined scheduled HS-DSCH data frame flows carried over Iub. This is needed as the basis for adjusting the hsDataFrameDelayThreshold attribute. Each counter observes a specific SPI. The different flows are configured ON/OFF using RBS MOM parameter IubDataStreams::schHsFlowControlOnOff.

Data Source

NodeB

Source Field

pmHsDataFrameDelayIubSpi06

Source Section

IubDataStreams

pmHsDtFrDelayIubSpi06_10

This PDF gives the dynamic delay for all defined scheduled HS-DSCH data frame flows carried over Iub. This is needed as the basis for adjusting the hsDataFrameDelayThreshold attribute. Each counter observes a specific SPI. The different flows are configured ON/OFF using RBS MOM parameter IubDataStreams::schHsFlowControlOnOff.

Data Source

NodeB

Source Field

pmHsDataFrameDelayIubSpi06

Source Section

IubDataStreams

pmHsDtFrDelayIubSpi06_11

This PDF gives the dynamic delay for all defined scheduled HS-DSCH data frame flows carried over Iub. This is needed as the basis for adjusting the hsDataFrameDelayThreshold attribute. Each counter observes a specific SPI. The different flows are configured ON/OFF using RBS MOM parameter IubDataStreams::schHsFlowControlOnOff.

Data Source

NodeB

Source Field

pmHsDataFrameDelayIubSpi06

Source Section

IubDataStreams

pmHsDtFrDelayIubSpi06_12

This PDF gives the dynamic delay for all defined scheduled HS-DSCH data frame flows carried over Iub. This is needed as the basis for adjusting the hsDataFrameDelayThreshold attribute. Each counter observes a specific SPI. The different flows are configured ON/OFF using RBS MOM parameter IubDataStreams::schHsFlowControlOnOff.

Data Source

NodeB

Source Field

pmHsDataFrameDelayIubSpi06

Source Section

IubDataStreams

pmHsDtFrDelayIubSpi06_13

This PDF gives the dynamic delay for all defined scheduled HS-DSCH data frame flows carried over Iub. This is needed as the basis for adjusting the hsDataFrameDelayThreshold attribute. Each counter observes a specific SPI. The different flows are configured ON/OFF using RBS MOM parameter IubDataStreams::schHsFlowControlOnOff.

Data Source

NodeB

Source Field

pmHsDataFrameDelayIubSpi06

Source Section

IubDataStreams

pmHsDtFrDelayIubSpi06_14

This PDF gives the dynamic delay for all defined scheduled HS-DSCH data frame flows carried over Iub. This is needed as the basis for adjusting the hsDataFrameDelayThreshold attribute. Each counter observes a specific SPI. The different flows are configured ON/OFF using RBS MOM parameter IubDataStreams::schHsFlowControlOnOff.

Data Source

NodeB

Source Field

pmHsDataFrameDelayIubSpi06

Source Section

IubDataStreams

pmHsDtFrDelayIubSpi06_15

This PDF gives the dynamic delay for all defined scheduled HS-DSCH data frame flows carried over Iub. This is needed as the basis for adjusting the hsDataFrameDelayThreshold attribute. Each counter observes a specific SPI. The different flows are configured ON/OFF using RBS MOM parameter IubDataStreams::schHsFlowControlOnOff.

Data Source

NodeB

Source Field

pmHsDataFrameDelayIubSpi06

Source Section

IubDataStreams

pmHsDtFrDelayIubSpi06_16

This PDF gives the dynamic delay for all defined scheduled HS-DSCH data frame flows carried over Iub. This is needed as the basis for adjusting the hsDataFrameDelayThreshold attribute. Each counter observes a specific SPI. The different flows are configured ON/OFF using RBS MOM parameter IubDataStreams::schHsFlowControlOnOff.

Data Source

NodeB

Source Field

pmHsDataFrameDelayIubSpi06

Source Section

IubDataStreams

pmHsDtFrDelayIubSpi07_01

This PDF gives the dynamic delay for all defined scheduled HS-DSCH data frame flows carried over Iub. This is needed as the basis for adjusting the hsDataFrameDelayThreshold attribute. Each counter observes a specific SPI. The different flows are configured ON/OFF using RBS MOM parameter IubDataStreams::schHsFlowControlOnOff.

Data Source

NodeB

Source Field

pmHsDataFrameDelayIubSpi07

Source Section

IubDataStreams

pmHsDtFrDelayIubSpi07_02

This PDF gives the dynamic delay for all defined scheduled HS-DSCH data frame flows carried over Iub. This is needed as the basis for adjusting the hsDataFrameDelayThreshold attribute. Each counter observes a specific SPI. The different flows are configured ON/OFF using RBS MOM parameter IubDataStreams::schHsFlowControlOnOff.

Data Source

NodeB

Source Field

pmHsDataFrameDelayIubSpi07

Source Section

IubDataStreams

pmHsDtFrDelayIubSpi07_03

This PDF gives the dynamic delay for all defined scheduled HS-DSCH data frame flows carried over Iub. This is needed as the basis for adjusting the hsDataFrameDelayThreshold attribute. Each counter observes a specific SPI. The different flows are configured ON/OFF using RBS MOM parameter IubDataStreams::schHsFlowControlOnOff.

Data Source

NodeB

Source Field

pmHsDataFrameDelayIubSpi07

Source Section

IubDataStreams

pmHsDtFrDelayIubSpi07_04

This PDF gives the dynamic delay for all defined scheduled HS-DSCH data frame flows carried over Iub. This is needed as the basis for adjusting the hsDataFrameDelayThreshold attribute.

Each counter observes a specific SPI. The different flows are configured ON/OFF using RBS MOM parameter IubDataStreams::schHsFlowControlOnOff.

Data Source

NodeB

Source Field

pmHsDataFrameDelayIubSpi07

Source Section

IubDataStreams

pmHsDtFrDelayIubSpi07_05

This PDF gives the dynamic delay for all defined scheduled HS-DSCH data frame flows carried over Iub. This is needed as the basis for adjusting the hsDataFrameDelayThreshold attribute. Each counter observes a specific SPI. The different flows are configured ON/OFF using RBS MOM parameter IubDataStreams::schHsFlowControlOnOff.

Data Source

NodeB

Source Field

pmHsDataFrameDelayIubSpi07

Source Section

IubDataStreams

pmHsDtFrDelayIubSpi07_06

This PDF gives the dynamic delay for all defined scheduled HS-DSCH data frame flows carried over Iub. This is needed as the basis for adjusting the hsDataFrameDelayThreshold attribute. Each counter observes a specific SPI. The different flows are configured ON/OFF using RBS MOM parameter IubDataStreams::schHsFlowControlOnOff.

Data Source

NodeB

Source Field

pmHsDataFrameDelayIubSpi07

Source Section

IubDataStreams

pmHsDtFrDelayIubSpi07_07

This PDF gives the dynamic delay for all defined scheduled HS-DSCH data frame flows carried over Iub. This is needed as the basis for adjusting the hsDataFrameDelayThreshold attribute. Each counter observes a specific SPI. The different flows are configured ON/OFF using RBS MOM parameter IubDataStreams::schHsFlowControlOnOff.

Data Source

NodeB

Source Field

pmHsDataFrameDelayIubSpi07

Source Section

IubDataStreams

pmHsDtFrDelayIubSpi07_08

This PDF gives the dynamic delay for all defined scheduled HS-DSCH data frame flows carried over Iub. This is needed as the basis for adjusting the hsDataFrameDelayThreshold attribute. Each counter observes a specific SPI. The different flows are configured ON/OFF using RBS MOM parameter IubDataStreams::schHsFlowControlOnOff.

Data Source

NodeB

Source Field

pmHsDataFrameDelayIubSpi07

Source Section

IubDataStreams

pmHsDtFrDelayIubSpi07_09

This PDF gives the dynamic delay for all defined scheduled HS-DSCH data frame flows carried over Iub. This is needed as the basis for adjusting the hsDataFrameDelayThreshold attribute. Each counter observes a specific SPI. The different flows are configured ON/OFF using RBS MOM parameter IubDataStreams::schHsFlowControlOnOff.

Data Source

NodeB

Source Field

pmHsDataFrameDelayIubSpi07

Source Section

IubDataStreams

pmHsDtFrDelayIubSpi07_10

This PDF gives the dynamic delay for all defined scheduled HS-DSCH data frame flows carried over Iub. This is needed as the basis for adjusting the hsDataFrameDelayThreshold attribute. Each counter observes a specific SPI. The different flows are configured ON/OFF using RBS MOM parameter IubDataStreams::schHsFlowControlOnOff.

Data Source

NodeB

Source Field

pmHsDataFrameDelayIubSpi07

Source Section

IubDataStreams

pmHsDtFrDelayIubSpi07_11

This PDF gives the dynamic delay for all defined scheduled HS-DSCH data frame flows carried over Iub. This is needed as the basis for adjusting the hsDataFrameDelayThreshold attribute. Each counter observes a specific SPI. The different flows are configured ON/OFF using RBS MOM parameter IubDataStreams::schHsFlowControlOnOff.

Data Source

NodeB

Source Field

pmHsDataFrameDelayIubSpi07

Source Section

IubDataStreams

pmHsDtFrDelayIubSpi07_12

This PDF gives the dynamic delay for all defined scheduled HS-DSCH data frame flows carried over Iub. This is needed as the basis for adjusting the hsDataFrameDelayThreshold attribute. Each counter observes a specific SPI. The different flows are configured ON/OFF using RBS MOM parameter IubDataStreams::schHsFlowControlOnOff.

Data Source

NodeB

Source Field

pmHsDataFrameDelayIubSpi07

Source Section

IubDataStreams

pmHsDtFrDelayIubSpi07_13

This PDF gives the dynamic delay for all defined scheduled HS-DSCH data frame flows carried over Iub. This is needed as the basis for adjusting the hsDataFrameDelayThreshold attribute. Each counter observes a specific SPI. The different flows are configured ON/OFF using RBS MOM parameter IubDataStreams::schHsFlowControlOnOff.

Data Source

NodeB

Source Field

pmHsDataFrameDelayIubSpi07

Source Section

IubDataStreams

pmHsDtFrDelayIubSpi07_14

This PDF gives the dynamic delay for all defined scheduled HS-DSCH data frame flows carried over Iub. This is needed as the basis for adjusting the hsDataFrameDelayThreshold attribute. Each counter observes a specific SPI. The different flows are configured ON/OFF using RBS MOM parameter IubDataStreams::schHsFlowControlOnOff.

Data Source

NodeB

Source Field

pmHsDataFrameDelayIubSpi07

Source Section

IubDataStreams

pmHsDtFrDelayIubSpi07_15

This PDF gives the dynamic delay for all defined scheduled HS-DSCH data frame flows carried over Iub. This is needed as the basis for adjusting the hsDataFrameDelayThreshold attribute. Each counter observes a specific SPI. The different flows are configured ON/OFF using RBS MOM parameter IubDataStreams::schHsFlowControlOnOff.

Data Source

NodeB

Source Field

pmHsDataFrameDelayIubSpi07

Source Section

IubDataStreams

pmHsDtFrDelayIubSpi07_16

This PDF gives the dynamic delay for all defined scheduled HS-DSCH data frame flows carried over Iub. This is needed as the basis for adjusting the hsDataFrameDelayThreshold attribute. Each counter observes a specific SPI. The different flows are configured ON/OFF using RBS MOM parameter IubDataStreams::schHsFlowControlOnOff.

Data Source

NodeB

Source Field

pmHsDataFrameDelayIubSpi07

Source Section

IubDataStreams

pmHsDtFrDelayIubSpi08_01

This PDF gives the dynamic delay for all defined scheduled HS-DSCH data frame flows carried over Iub. This is needed as the basis for adjusting the hsDataFrameDelayThreshold attribute.

Each counter observes a specific SPI. The different flows are configured ON/OFF using RBS MOM parameter IubDataStreams::schHsFlowControlOnOff.

Data Source

NodeB

Source Field

pmHsDataFrameDelayIubSpi08

Source Section

IubDataStreams

pmHsDtFrDelayIubSpi08_02

This PDF gives the dynamic delay for all defined scheduled HS-DSCH data frame flows carried over Iub. This is needed as the basis for adjusting the hsDataFrameDelayThreshold attribute. Each counter observes a specific SPI. The different flows are configured ON/OFF using RBS MOM parameter IubDataStreams::schHsFlowControlOnOff.

Data Source

NodeB

Source Field

pmHsDataFrameDelayIubSpi08

Source Section

IubDataStreams

pmHsDtFrDelayIubSpi08_03

This PDF gives the dynamic delay for all defined scheduled HS-DSCH data frame flows carried over Iub. This is needed as the basis for adjusting the hsDataFrameDelayThreshold attribute. Each counter observes a specific SPI. The different flows are configured ON/OFF using RBS MOM parameter IubDataStreams::schHsFlowControlOnOff.

Data Source

NodeB

Source Field

pmHsDataFrameDelayIubSpi08

Source Section

IubDataStreams

pmHsDtFrDelayIubSpi08_04

This PDF gives the dynamic delay for all defined scheduled HS-DSCH data frame flows carried over Iub. This is needed as the basis for adjusting the hsDataFrameDelayThreshold attribute. Each counter observes a specific SPI. The different flows are configured ON/OFF using RBS MOM parameter IubDataStreams::schHsFlowControlOnOff.

Data Source

NodeB

Source Field

pmHsDataFrameDelayIubSpi08

Source Section

IubDataStreams

pmHsDtFrDelayIubSpi08_05

This PDF gives the dynamic delay for all defined scheduled HS-DSCH data frame flows carried over Iub. This is needed as the basis for adjusting the hsDataFrameDelayThreshold attribute. Each counter observes a specific SPI. The different flows are configured ON/OFF using RBS MOM parameter IubDataStreams::schHsFlowControlOnOff.

Data Source

NodeB

Source Field

pmHsDataFrameDelayIubSpi08

Source Section

IubDataStreams

pmHsDtFrDelayIubSpi08_06

This PDF gives the dynamic delay for all defined scheduled HS-DSCH data frame flows carried over Iub. This is needed as the basis for adjusting the hsDataFrameDelayThreshold attribute. Each counter observes a specific SPI. The different flows are configured ON/OFF using RBS MOM parameter IubDataStreams::schHsFlowControlOnOff.

Data Source

NodeB

Source Field

pmHsDataFrameDelayIubSpi08

Source Section

IubDataStreams

pmHsDtFrDelayIubSpi08_07

This PDF gives the dynamic delay for all defined scheduled HS-DSCH data frame flows carried over Iub. This is needed as the basis for adjusting the hsDataFrameDelayThreshold attribute. Each counter observes a specific SPI. The different flows are configured ON/OFF using RBS MOM parameter IubDataStreams::schHsFlowControlOnOff.

Data Source

NodeB

Source Field

pmHsDataFrameDelayIubSpi08

Source Section

IubDataStreams

pmHsDtFrDelayIubSpi08_08

This PDF gives the dynamic delay for all defined scheduled HS-DSCH data frame flows carried over Iub. This is needed as the basis for adjusting the hsDataFrameDelayThreshold attribute. Each counter observes a specific SPI. The different flows are configured ON/OFF using RBS MOM parameter IubDataStreams::schHsFlowControlOnOff.

Data Source

NodeB

Source Field

pmHsDataFrameDelayIubSpi08

Source Section

IubDataStreams

pmHsDtFrDelayIubSpi08_09

This PDF gives the dynamic delay for all defined scheduled HS-DSCH data frame flows carried over Iub. This is needed as the basis for adjusting the hsDataFrameDelayThreshold attribute. Each counter observes a specific SPI. The different flows are configured ON/OFF using RBS MOM parameter IubDataStreams::schHsFlowControlOnOff.

Data Source

NodeB

Source Field

pmHsDataFrameDelayIubSpi08

Source Section

IubDataStreams

pmHsDtFrDelayIubSpi08_10

This PDF gives the dynamic delay for all defined scheduled HS-DSCH data frame flows carried over Iub. This is needed as the basis for adjusting the hsDataFrameDelayThreshold attribute. Each counter observes a specific SPI. The different flows are configured ON/OFF using RBS MOM parameter IubDataStreams::schHsFlowControlOnOff.

Data Source

NodeB

Source Field

pmHsDataFrameDelayIubSpi08

Source Section

IubDataStreams

pmHsDtFrDelayIubSpi08_11

This PDF gives the dynamic delay for all defined scheduled HS-DSCH data frame flows carried over Iub. This is needed as the basis for adjusting the hsDataFrameDelayThreshold attribute. Each counter observes a specific SPI. The different flows are configured ON/OFF using RBS MOM parameter IubDataStreams::schHsFlowControlOnOff.

Data Source

NodeB

Source Field

pmHsDataFrameDelayIubSpi08

Source Section

IubDataStreams

pmHsDtFrDelayIubSpi08_12

This PDF gives the dynamic delay for all defined scheduled HS-DSCH data frame flows carried over Iub. This is needed as the basis for adjusting the hsDataFrameDelayThreshold attribute. Each counter observes a specific SPI. The different flows are configured ON/OFF using RBS MOM parameter IubDataStreams::schHsFlowControlOnOff.

Data Source

NodeB

Source Field

pmHsDataFrameDelayIubSpi08

Source Section

IubDataStreams

pmHsDtFrDelayIubSpi08_13

This PDF gives the dynamic delay for all defined scheduled HS-DSCH data frame flows carried over Iub. This is needed as the basis for adjusting the hsDataFrameDelayThreshold attribute. Each counter observes a specific SPI. The different flows are configured ON/OFF using RBS MOM parameter IubDataStreams::schHsFlowControlOnOff.

Data Source

NodeB

Source Field

pmHsDataFrameDelayIubSpi08

Source Section

IubDataStreams

pmHsDtFrDelayIubSpi08_14

This PDF gives the dynamic delay for all defined scheduled HS-DSCH data frame flows carried over Iub. This is needed as the basis for adjusting the hsDataFrameDelayThreshold attribute.

Each counter observes a specific SPI. The different flows are configured ON/OFF using RBS MOM parameter IubDataStreams::schHsFlowControlOnOff.

Data Source

NodeB

Source Field

pmHsDataFrameDelayIubSpi08

Source Section

IubDataStreams

pmHsDtFrDelayIubSpi08_15

This PDF gives the dynamic delay for all defined scheduled HS-DSCH data frame flows carried over Iub. This is needed as the basis for adjusting the hsDataFrameDelayThreshold attribute. Each counter observes a specific SPI. The different flows are configured ON/OFF using RBS MOM parameter IubDataStreams::schHsFlowControlOnOff.

Data Source

NodeB

Source Field

pmHsDataFrameDelayIubSpi08

Source Section

IubDataStreams

pmHsDtFrDelayIubSpi08_16

This PDF gives the dynamic delay for all defined scheduled HS-DSCH data frame flows carried over Iub. This is needed as the basis for adjusting the hsDataFrameDelayThreshold attribute. Each counter observes a specific SPI. The different flows are configured ON/OFF using RBS MOM parameter IubDataStreams::schHsFlowControlOnOff.

Data Source

NodeB

Source Field

pmHsDataFrameDelayIubSpi08

Source Section

IubDataStreams

pmHsDtFrDelayIubSpi09_01

This PDF gives the dynamic delay for all defined scheduled HS-DSCH data frame flows carried over Iub. This is needed as the basis for adjusting the hsDataFrameDelayThreshold attribute. Each counter observes a specific SPI. The different flows are configured ON/OFF using RBS MOM parameter IubDataStreams::schHsFlowControlOnOff.

Data Source

NodeB

Source Field

pmHsDataFrameDelayIubSpi09

Source Section

IubDataStreams

pmHsDtFrDelayIubSpi09_02

This PDF gives the dynamic delay for all defined scheduled HS-DSCH data frame flows carried over Iub. This is needed as the basis for adjusting the hsDataFrameDelayThreshold attribute. Each counter observes a specific SPI. The different flows are configured ON/OFF using RBS MOM parameter IubDataStreams::schHsFlowControlOnOff.

Data Source

NodeB

Source Field

pmHsDataFrameDelayIubSpi09

Source Section

IubDataStreams

pmHsDtFrDelayIubSpi09_03

This PDF gives the dynamic delay for all defined scheduled HS-DSCH data frame flows carried over Iub. This is needed as the basis for adjusting the hsDataFrameDelayThreshold attribute. Each counter observes a specific SPI. The different flows are configured ON/OFF using RBS MOM parameter IubDataStreams::schHsFlowControlOnOff.

Data Source

NodeB

Source Field

pmHsDataFrameDelayIubSpi09

Source Section

IubDataStreams

pmHsDtFrDelayIubSpi09_04

This PDF gives the dynamic delay for all defined scheduled HS-DSCH data frame flows carried over Iub. This is needed as the basis for adjusting the hsDataFrameDelayThreshold attribute. Each counter observes a specific SPI. The different flows are configured ON/OFF using RBS MOM parameter IubDataStreams::schHsFlowControlOnOff.

Data Source

NodeB

Source Field

pmHsDataFrameDelayIubSpi09

Source Section

IubDataStreams

pmHsDtFrDelayIubSpi09_05

This PDF gives the dynamic delay for all defined scheduled HS-DSCH data frame flows carried over Iub. This is needed as the basis for adjusting the hsDataFrameDelayThreshold attribute. Each counter observes a specific SPI. The different flows are configured ON/OFF using RBS MOM parameter IubDataStreams::schHsFlowControlOnOff.

Data Source

NodeB

Source Field

pmHsDataFrameDelayIubSpi09

Source Section

IubDataStreams

pmHsDtFrDelayIubSpi09_06

This PDF gives the dynamic delay for all defined scheduled HS-DSCH data frame flows carried over Iub. This is needed as the basis for adjusting the hsDataFrameDelayThreshold attribute. Each counter observes a specific SPI. The different flows are configured ON/OFF using RBS MOM parameter IubDataStreams::schHsFlowControlOnOff.

Data Source

NodeB

Source Field

pmHsDataFrameDelayIubSpi09

Source Section

IubDataStreams

pmHsDtFrDelayIubSpi09_07

This PDF gives the dynamic delay for all defined scheduled HS-DSCH data frame flows carried over Iub. This is needed as the basis for adjusting the hsDataFrameDelayThreshold attribute. Each counter observes a specific SPI. The different flows are configured ON/OFF using RBS MOM parameter IubDataStreams::schHsFlowControlOnOff.

Data Source

NodeB

Source Field

pmHsDataFrameDelayIubSpi09

Source Section

IubDataStreams

pmHsDtFrDelayIubSpi09_08

This PDF gives the dynamic delay for all defined scheduled HS-DSCH data frame flows carried over Iub. This is needed as the basis for adjusting the hsDataFrameDelayThreshold attribute. Each counter observes a specific SPI. The different flows are configured ON/OFF using RBS MOM parameter IubDataStreams::schHsFlowControlOnOff.

Data Source

NodeB

Source Field

pmHsDataFrameDelayIubSpi09

Source Section

IubDataStreams

pmHsDtFrDelayIubSpi09_09

This PDF gives the dynamic delay for all defined scheduled HS-DSCH data frame flows carried over Iub. This is needed as the basis for adjusting the hsDataFrameDelayThreshold attribute. Each counter observes a specific SPI. The different flows are configured ON/OFF using RBS MOM parameter IubDataStreams::schHsFlowControlOnOff.

Data Source

NodeB

Source Field

pmHsDataFrameDelayIubSpi09

Source Section

IubDataStreams

pmHsDtFrDelayIubSpi09_10

This PDF gives the dynamic delay for all defined scheduled HS-DSCH data frame flows carried over Iub. This is needed as the basis for adjusting the hsDataFrameDelayThreshold attribute. Each counter observes a specific SPI. The different flows are configured ON/OFF using RBS MOM parameter IubDataStreams::schHsFlowControlOnOff.

Data Source

NodeB

Source Field

pmHsDataFrameDelayIubSpi09

Source Section

IubDataStreams

pmHsDtFrDelayIubSpi09_11

This PDF gives the dynamic delay for all defined scheduled HS-DSCH data frame flows carried over Iub. This is needed as the basis for adjusting the hsDataFrameDelayThreshold attribute.

Each counter observes a specific SPI. The different flows are configured ON/OFF using RBS MOM parameter IubDataStreams::schHsFlowControlOnOff.

Data Source

NodeB

Source Field

pmHsDataFrameDelayIubSpi09

Source Section

IubDataStreams

pmHsDtFrDelayIubSpi09_12

This PDF gives the dynamic delay for all defined scheduled HS-DSCH data frame flows carried over Iub. This is needed as the basis for adjusting the hsDataFrameDelayThreshold attribute. Each counter observes a specific SPI. The different flows are configured ON/OFF using RBS MOM parameter IubDataStreams::schHsFlowControlOnOff.

Data Source

NodeB

Source Field

pmHsDataFrameDelayIubSpi09

Source Section

IubDataStreams

pmHsDtFrDelayIubSpi09_13

This PDF gives the dynamic delay for all defined scheduled HS-DSCH data frame flows carried over Iub. This is needed as the basis for adjusting the hsDataFrameDelayThreshold attribute. Each counter observes a specific SPI. The different flows are configured ON/OFF using RBS MOM parameter IubDataStreams::schHsFlowControlOnOff.

Data Source

NodeB

Source Field

pmHsDataFrameDelayIubSpi09

Source Section

IubDataStreams

pmHsDtFrDelayIubSpi09_14

This PDF gives the dynamic delay for all defined scheduled HS-DSCH data frame flows carried over Iub. This is needed as the basis for adjusting the hsDataFrameDelayThreshold attribute. Each counter observes a specific SPI. The different flows are configured ON/OFF using RBS MOM parameter IubDataStreams::schHsFlowControlOnOff.

Data Source

NodeB

Source Field

pmHsDataFrameDelayIubSpi09

Source Section

IubDataStreams

pmHsDtFrDelayIubSpi09_15

This PDF gives the dynamic delay for all defined scheduled HS-DSCH data frame flows carried over Iub. This is needed as the basis for adjusting the hsDataFrameDelayThreshold attribute. Each counter observes a specific SPI. The different flows are configured ON/OFF using RBS MOM parameter IubDataStreams::schHsFlowControlOnOff.

Data Source

NodeB

Source Field

pmHsDataFrameDelayIubSpi09

Source Section

IubDataStreams

pmHsDtFrDelayIubSpi09_16

This PDF gives the dynamic delay for all defined scheduled HS-DSCH data frame flows carried over Iub. This is needed as the basis for adjusting the hsDataFrameDelayThreshold attribute. Each counter observes a specific SPI. The different flows are configured ON/OFF using RBS MOM parameter IubDataStreams::schHsFlowControlOnOff.

Data Source

NodeB

Source Field

pmHsDataFrameDelayIubSpi09

Source Section

IubDataStreams

pmHsDtFrDelayIubSpi10_01

This PDF gives the dynamic delay for all defined scheduled HS-DSCH data frame flows carried over Iub. This is needed as the basis for adjusting the hsDataFrameDelayThreshold attribute. Each counter observes a specific SPI. The different flows are configured ON/OFF using RBS MOM parameter IubDataStreams::schHsFlowControlOnOff.

Data Source

NodeB

Source Field

pmHsDataFrameDelayIubSpi10

Source Section

IubDataStreams

pmHsDtFrDelayIubSpi10_02

This PDF gives the dynamic delay for all defined scheduled HS-DSCH data frame flows carried over Iub. This is needed as the basis for adjusting the hsDataFrameDelayThreshold attribute. Each counter observes a specific SPI. The different flows are configured ON/OFF using RBS MOM parameter IubDataStreams::schHsFlowControlOnOff.

Data Source

NodeB

Source Field

pmHsDataFrameDelayIubSpi10

Source Section

IubDataStreams

pmHsDtFrDelayIubSpi10_03

This PDF gives the dynamic delay for all defined scheduled HS-DSCH data frame flows carried over Iub. This is needed as the basis for adjusting the hsDataFrameDelayThreshold attribute. Each counter observes a specific SPI. The different flows are configured ON/OFF using RBS MOM parameter IubDataStreams::schHsFlowControlOnOff.

Data Source

NodeB

Source Field

pmHsDataFrameDelayIubSpi10

Source Section

IubDataStreams

pmHsDtFrDelayIubSpi10_04

This PDF gives the dynamic delay for all defined scheduled HS-DSCH data frame flows carried over Iub. This is needed as the basis for adjusting the hsDataFrameDelayThreshold attribute. Each counter observes a specific SPI. The different flows are configured ON/OFF using RBS MOM parameter IubDataStreams::schHsFlowControlOnOff.

Data Source

NodeB

Source Field

pmHsDataFrameDelayIubSpi10

Source Section

IubDataStreams

pmHsDtFrDelayIubSpi10_05

This PDF gives the dynamic delay for all defined scheduled HS-DSCH data frame flows carried over Iub. This is needed as the basis for adjusting the hsDataFrameDelayThreshold attribute. Each counter observes a specific SPI. The different flows are configured ON/OFF using RBS MOM parameter IubDataStreams::schHsFlowControlOnOff.

Data Source

NodeB

Source Field

pmHsDataFrameDelayIubSpi10

Source Section

IubDataStreams

pmHsDtFrDelayIubSpi10_06

This PDF gives the dynamic delay for all defined scheduled HS-DSCH data frame flows carried over Iub. This is needed as the basis for adjusting the hsDataFrameDelayThreshold attribute. Each counter observes a specific SPI. The different flows are configured ON/OFF using RBS MOM parameter IubDataStreams::schHsFlowControlOnOff.

Data Source

NodeB

Source Field

pmHsDataFrameDelayIubSpi10

Source Section

IubDataStreams

pmHsDtFrDelayIubSpi10_07

This PDF gives the dynamic delay for all defined scheduled HS-DSCH data frame flows carried over Iub. This is needed as the basis for adjusting the hsDataFrameDelayThreshold attribute. Each counter observes a specific SPI. The different flows are configured ON/OFF using RBS MOM parameter IubDataStreams::schHsFlowControlOnOff.

Data Source

NodeB

Source Field

pmHsDataFrameDelayIubSpi10

Source Section

IubDataStreams

pmHsDtFrDelayIubSpi10_08

This PDF gives the dynamic delay for all defined scheduled HS-DSCH data frame flows carried over Iub. This is needed as the basis for adjusting the hsDataFrameDelayThreshold attribute.

Each counter observes a specific SPI. The different flows are configured ON/OFF using RBS MOM parameter IubDataStreams::schHsFlowControlOnOff.

Data Source

NodeB

Source Field

pmHsDataFrameDelayIubSpi10

Source Section

IubDataStreams

pmHsDtFrDelayIubSpi10_09

This PDF gives the dynamic delay for all defined scheduled HS-DSCH data frame flows carried over Iub. This is needed as the basis for adjusting the hsDataFrameDelayThreshold attribute. Each counter observes a specific SPI. The different flows are configured ON/OFF using RBS MOM parameter IubDataStreams::schHsFlowControlOnOff.

Data Source

NodeB

Source Field

pmHsDataFrameDelayIubSpi10

Source Section

IubDataStreams

pmHsDtFrDelayIubSpi10_10

This PDF gives the dynamic delay for all defined scheduled HS-DSCH data frame flows carried over Iub. This is needed as the basis for adjusting the hsDataFrameDelayThreshold attribute. Each counter observes a specific SPI. The different flows are configured ON/OFF using RBS MOM parameter IubDataStreams::schHsFlowControlOnOff.

Data Source

NodeB

Source Field

pmHsDataFrameDelayIubSpi10

Source Section

IubDataStreams

pmHsDtFrDelayIubSpi10_11

This PDF gives the dynamic delay for all defined scheduled HS-DSCH data frame flows carried over Iub. This is needed as the basis for adjusting the hsDataFrameDelayThreshold attribute. Each counter observes a specific SPI. The different flows are configured ON/OFF using RBS MOM parameter IubDataStreams::schHsFlowControlOnOff.

Data Source

NodeB

Source Field

pmHsDataFrameDelayIubSpi10

Source Section

IubDataStreams

pmHsDtFrDelayIubSpi10_12

This PDF gives the dynamic delay for all defined scheduled HS-DSCH data frame flows carried over Iub. This is needed as the basis for adjusting the hsDataFrameDelayThreshold attribute. Each counter observes a specific SPI. The different flows are configured ON/OFF using RBS MOM parameter IubDataStreams::schHsFlowControlOnOff.

Data Source

NodeB

Source Field

pmHsDataFrameDelayIubSpi10

Source Section

IubDataStreams

pmHsDtFrDelayIubSpi10_13

This PDF gives the dynamic delay for all defined scheduled HS-DSCH data frame flows carried over Iub. This is needed as the basis for adjusting the hsDataFrameDelayThreshold attribute. Each counter observes a specific SPI. The different flows are configured ON/OFF using RBS MOM parameter IubDataStreams::schHsFlowControlOnOff.

Data Source

NodeB

Source Field

pmHsDataFrameDelayIubSpi10

Source Section

IubDataStreams

pmHsDtFrDelayIubSpi10_14

This PDF gives the dynamic delay for all defined scheduled HS-DSCH data frame flows carried over Iub. This is needed as the basis for adjusting the hsDataFrameDelayThreshold attribute. Each counter observes a specific SPI. The different flows are configured ON/OFF using RBS MOM parameter IubDataStreams::schHsFlowControlOnOff.

Data Source

NodeB

Source Field

pmHsDataFrameDelayIubSpi10

Source Section

IubDataStreams

pmHsDtFrDelayIubSpi10_15

This PDF gives the dynamic delay for all defined scheduled HS-DSCH data frame flows carried over Iub. This is needed as the basis for adjusting the hsDataFrameDelayThreshold attribute. Each counter observes a specific SPI. The different flows are configured ON/OFF using RBS MOM parameter IubDataStreams::schHsFlowControlOnOff.

Data Source

NodeB

Source Field

pmHsDataFrameDelayIubSpi10

Source Section

IubDataStreams

pmHsDtFrDelayIubSpi10_16

This PDF gives the dynamic delay for all defined scheduled HS-DSCH data frame flows carried over Iub. This is needed as the basis for adjusting the hsDataFrameDelayThreshold attribute. Each counter observes a specific SPI. The different flows are configured ON/OFF using RBS MOM parameter IubDataStreams::schHsFlowControlOnOff.

Data Source

NodeB

Source Field

pmHsDataFrameDelayIubSpi10

Source Section

IubDataStreams

pmHsDtFrDelayIubSpi11_01

This PDF gives the dynamic delay for all defined scheduled HS-DSCH data frame flows carried over Iub. This is needed as the basis for adjusting the hsDataFrameDelayThreshold attribute. Each counter observes a specific SPI. The different flows are configured ON/OFF using RBS MOM parameter IubDataStreams::schHsFlowControlOnOff.

Data Source

NodeB

Source Field

pmHsDataFrameDelayIubSpi11

Source Section

IubDataStreams

pmHsDtFrDelayIubSpi11_02

This PDF gives the dynamic delay for all defined scheduled HS-DSCH data frame flows carried over Iub. This is needed as the basis for adjusting the hsDataFrameDelayThreshold attribute. Each counter observes a specific SPI. The different flows are configured ON/OFF using RBS MOM parameter IubDataStreams::schHsFlowControlOnOff.

Data Source

NodeB

Source Field

pmHsDataFrameDelayIubSpi11

Source Section

IubDataStreams

pmHsDtFrDelayIubSpi11_03

This PDF gives the dynamic delay for all defined scheduled HS-DSCH data frame flows carried over Iub. This is needed as the basis for adjusting the hsDataFrameDelayThreshold attribute. Each counter observes a specific SPI. The different flows are configured ON/OFF using RBS MOM parameter IubDataStreams::schHsFlowControlOnOff.

Data Source

NodeB

Source Field

pmHsDataFrameDelayIubSpi11

Source Section

IubDataStreams

pmHsDtFrDelayIubSpi11_04

This PDF gives the dynamic delay for all defined scheduled HS-DSCH data frame flows carried over Iub. This is needed as the basis for adjusting the hsDataFrameDelayThreshold attribute. Each counter observes a specific SPI. The different flows are configured ON/OFF using RBS MOM parameter IubDataStreams::schHsFlowControlOnOff.

Data Source

NodeB

Source Field

pmHsDataFrameDelayIubSpi11

Source Section

IubDataStreams

pmHsDtFrDelayIubSpi11_05

This PDF gives the dynamic delay for all defined scheduled HS-DSCH data frame flows carried over Iub. This is needed as the basis for adjusting the hsDataFrameDelayThreshold attribute.

Each counter observes a specific SPI. The different flows are configured ON/OFF using RBS MOM parameter IubDataStreams::schHsFlowControlOnOff.

Data Source

NodeB

Source Field

pmHsDataFrameDelayIubSpi11

Source Section

IubDataStreams

pmHsDtFrDelayIubSpi11_06

This PDF gives the dynamic delay for all defined scheduled HS-DSCH data frame flows carried over Iub. This is needed as the basis for adjusting the hsDataFrameDelayThreshold attribute. Each counter observes a specific SPI. The different flows are configured ON/OFF using RBS MOM parameter IubDataStreams::schHsFlowControlOnOff.

Data Source

NodeB

Source Field

pmHsDataFrameDelayIubSpi11

Source Section

IubDataStreams

pmHsDtFrDelayIubSpi11_07

This PDF gives the dynamic delay for all defined scheduled HS-DSCH data frame flows carried over Iub. This is needed as the basis for adjusting the hsDataFrameDelayThreshold attribute. Each counter observes a specific SPI. The different flows are configured ON/OFF using RBS MOM parameter IubDataStreams::schHsFlowControlOnOff.

Data Source

NodeB

Source Field

pmHsDataFrameDelayIubSpi11

Source Section

IubDataStreams

pmHsDtFrDelayIubSpi11_08

This PDF gives the dynamic delay for all defined scheduled HS-DSCH data frame flows carried over Iub. This is needed as the basis for adjusting the hsDataFrameDelayThreshold attribute. Each counter observes a specific SPI. The different flows are configured ON/OFF using RBS MOM parameter IubDataStreams::schHsFlowControlOnOff.

Data Source

NodeB

Source Field

pmHsDataFrameDelayIubSpi11

Source Section

IubDataStreams

pmHsDtFrDelayIubSpi11_09

This PDF gives the dynamic delay for all defined scheduled HS-DSCH data frame flows carried over Iub. This is needed as the basis for adjusting the hsDataFrameDelayThreshold attribute. Each counter observes a specific SPI. The different flows are configured ON/OFF using RBS MOM parameter IubDataStreams::schHsFlowControlOnOff.

Data Source

NodeB

Source Field

pmHsDataFrameDelayIubSpi11

Source Section

IubDataStreams

pmHsDtFrDelayIubSpi11_10

This PDF gives the dynamic delay for all defined scheduled HS-DSCH data frame flows carried over Iub. This is needed as the basis for adjusting the hsDataFrameDelayThreshold attribute. Each counter observes a specific SPI. The different flows are configured ON/OFF using RBS MOM parameter IubDataStreams::schHsFlowControlOnOff.

Data Source

NodeB

Source Field

pmHsDataFrameDelayIubSpi11

Source Section

IubDataStreams

pmHsDtFrDelayIubSpi11_11

This PDF gives the dynamic delay for all defined scheduled HS-DSCH data frame flows carried over Iub. This is needed as the basis for adjusting the hsDataFrameDelayThreshold attribute. Each counter observes a specific SPI. The different flows are configured ON/OFF using RBS MOM parameter IubDataStreams::schHsFlowControlOnOff.

Data Source

NodeB

Source Field

pmHsDataFrameDelayIubSpi11

Source Section

IubDataStreams

pmHsDtFrDelayIubSpi11_12

This PDF gives the dynamic delay for all defined scheduled HS-DSCH data frame flows carried over Iub. This is needed as the basis for adjusting the hsDataFrameDelayThreshold attribute. Each counter observes a specific SPI. The different flows are configured ON/OFF using RBS MOM parameter IubDataStreams::schHsFlowControlOnOff.

Data Source

NodeB

Source Field

pmHsDataFrameDelayIubSpi11

Source Section

IubDataStreams

pmHsDtFrDelayIubSpi11_13

This PDF gives the dynamic delay for all defined scheduled HS-DSCH data frame flows carried over Iub. This is needed as the basis for adjusting the hsDataFrameDelayThreshold attribute. Each counter observes a specific SPI. The different flows are configured ON/OFF using RBS MOM parameter IubDataStreams::schHsFlowControlOnOff.

Data Source

NodeB

Source Field

pmHsDataFrameDelayIubSpi11

Source Section

IubDataStreams

pmHsDtFrDelayIubSpi11_14

This PDF gives the dynamic delay for all defined scheduled HS-DSCH data frame flows carried over Iub. This is needed as the basis for adjusting the hsDataFrameDelayThreshold attribute. Each counter observes a specific SPI. The different flows are configured ON/OFF using RBS MOM parameter IubDataStreams::schHsFlowControlOnOff.

Data Source

NodeB

Source Field

pmHsDataFrameDelayIubSpi11

Source Section

IubDataStreams

pmHsDtFrDelayIubSpi11_15

This PDF gives the dynamic delay for all defined scheduled HS-DSCH data frame flows carried over Iub. This is needed as the basis for adjusting the hsDataFrameDelayThreshold attribute. Each counter observes a specific SPI. The different flows are configured ON/OFF using RBS MOM parameter IubDataStreams::schHsFlowControlOnOff.

Data Source

NodeB

Source Field

pmHsDataFrameDelayIubSpi11

Source Section

IubDataStreams

pmHsDtFrDelayIubSpi11_16

This PDF gives the dynamic delay for all defined scheduled HS-DSCH data frame flows carried over Iub. This is needed as the basis for adjusting the hsDataFrameDelayThreshold attribute. Each counter observes a specific SPI. The different flows are configured ON/OFF using RBS MOM parameter IubDataStreams::schHsFlowControlOnOff.

Data Source

NodeB

Source Field

pmHsDataFrameDelayIubSpi11

Source Section

IubDataStreams

pmHsDtFrDelayIubSpi12_01

This PDF gives the dynamic delay for all defined scheduled HS-DSCH data frame flows carried over Iub. This is needed as the basis for adjusting the hsDataFrameDelayThreshold attribute. Each counter observes a specific SPI. The different flows are configured ON/OFF using RBS MOM parameter IubDataStreams::schHsFlowControlOnOff.

Data Source

NodeB

Source Field

pmHsDataFrameDelayIubSpi12

Source Section

IubDataStreams

pmHsDtFrDelayIubSpi12_02

This PDF gives the dynamic delay for all defined scheduled HS-DSCH data frame flows carried over Iub. This is needed as the basis for adjusting the hsDataFrameDelayThreshold attribute.

Each counter observes a specific SPI. The different flows are configured ON/OFF using RBS MOM parameter IubDataStreams::schHsFlowControlOnOff.

Data Source

NodeB

Source Field

pmHsDataFrameDelayIubSpi12

Source Section

IubDataStreams

pmHsDtFrDelayIubSpi12_03

This PDF gives the dynamic delay for all defined scheduled HS-DSCH data frame flows carried over Iub. This is needed as the basis for adjusting the hsDataFrameDelayThreshold attribute. Each counter observes a specific SPI. The different flows are configured ON/OFF using RBS MOM parameter IubDataStreams::schHsFlowControlOnOff.

Data Source

NodeB

Source Field

pmHsDataFrameDelayIubSpi12

Source Section

IubDataStreams

pmHsDtFrDelayIubSpi12_04

This PDF gives the dynamic delay for all defined scheduled HS-DSCH data frame flows carried over Iub. This is needed as the basis for adjusting the hsDataFrameDelayThreshold attribute. Each counter observes a specific SPI. The different flows are configured ON/OFF using RBS MOM parameter IubDataStreams::schHsFlowControlOnOff.

Data Source

NodeB

Source Field

pmHsDataFrameDelayIubSpi12

Source Section

IubDataStreams

pmHsDtFrDelayIubSpi12_05

This PDF gives the dynamic delay for all defined scheduled HS-DSCH data frame flows carried over Iub. This is needed as the basis for adjusting the hsDataFrameDelayThreshold attribute. Each counter observes a specific SPI. The different flows are configured ON/OFF using RBS MOM parameter IubDataStreams::schHsFlowControlOnOff.

Data Source

NodeB

Source Field

pmHsDataFrameDelayIubSpi12

Source Section

IubDataStreams

pmHsDtFrDelayIubSpi12_06

This PDF gives the dynamic delay for all defined scheduled HS-DSCH data frame flows carried over Iub. This is needed as the basis for adjusting the hsDataFrameDelayThreshold attribute. Each counter observes a specific SPI. The different flows are configured ON/OFF using RBS MOM parameter IubDataStreams::schHsFlowControlOnOff.

Data Source

NodeB

Source Field

pmHsDataFrameDelayIubSpi12

Source Section

IubDataStreams

pmHsDtFrDelayIubSpi12_07

This PDF gives the dynamic delay for all defined scheduled HS-DSCH data frame flows carried over Iub. This is needed as the basis for adjusting the hsDataFrameDelayThreshold attribute. Each counter observes a specific SPI. The different flows are configured ON/OFF using RBS MOM parameter IubDataStreams::schHsFlowControlOnOff.

Data Source

NodeB

Source Field

pmHsDataFrameDelayIubSpi12

Source Section

IubDataStreams

pmHsDtFrDelayIubSpi12_08

This PDF gives the dynamic delay for all defined scheduled HS-DSCH data frame flows carried over Iub. This is needed as the basis for adjusting the hsDataFrameDelayThreshold attribute. Each counter observes a specific SPI. The different flows are configured ON/OFF using RBS MOM parameter IubDataStreams::schHsFlowControlOnOff.

Data Source

NodeB

Source Field

pmHsDataFrameDelayIubSpi12

Source Section

IubDataStreams

pmHsDtFrDelayIubSpi12_09

This PDF gives the dynamic delay for all defined scheduled HS-DSCH data frame flows carried over Iub. This is needed as the basis for adjusting the hsDataFrameDelayThreshold attribute. Each counter observes a specific SPI. The different flows are configured ON/OFF using RBS MOM parameter IubDataStreams::schHsFlowControlOnOff.

Data Source

NodeB

Source Field

pmHsDataFrameDelayIubSpi12

Source Section

IubDataStreams

pmHsDtFrDelayIubSpi12_10

This PDF gives the dynamic delay for all defined scheduled HS-DSCH data frame flows carried over Iub. This is needed as the basis for adjusting the hsDataFrameDelayThreshold attribute. Each counter observes a specific SPI. The different flows are configured ON/OFF using RBS MOM parameter IubDataStreams::schHsFlowControlOnOff.

Data Source

NodeB

Source Field

pmHsDataFrameDelayIubSpi12

Source Section

IubDataStreams

pmHsDtFrDelayIubSpi12_11

This PDF gives the dynamic delay for all defined scheduled HS-DSCH data frame flows carried over Iub. This is needed as the basis for adjusting the hsDataFrameDelayThreshold attribute. Each counter observes a specific SPI. The different flows are configured ON/OFF using RBS MOM parameter IubDataStreams::schHsFlowControlOnOff.

Data Source

NodeB

Source Field

pmHsDataFrameDelayIubSpi12

Source Section

IubDataStreams

pmHsDtFrDelayIubSpi12_12

This PDF gives the dynamic delay for all defined scheduled HS-DSCH data frame flows carried over Iub. This is needed as the basis for adjusting the hsDataFrameDelayThreshold attribute. Each counter observes a specific SPI. The different flows are configured ON/OFF using RBS MOM parameter IubDataStreams::schHsFlowControlOnOff.

Data Source

NodeB

Source Field

pmHsDataFrameDelayIubSpi12

Source Section

IubDataStreams

pmHsDtFrDelayIubSpi12_13

This PDF gives the dynamic delay for all defined scheduled HS-DSCH data frame flows carried over Iub. This is needed as the basis for adjusting the hsDataFrameDelayThreshold attribute. Each counter observes a specific SPI. The different flows are configured ON/OFF using RBS MOM parameter IubDataStreams::schHsFlowControlOnOff.

Data Source

NodeB

Source Field

pmHsDataFrameDelayIubSpi12

Source Section

IubDataStreams

pmHsDtFrDelayIubSpi12_14

This PDF gives the dynamic delay for all defined scheduled HS-DSCH data frame flows carried over Iub. This is needed as the basis for adjusting the hsDataFrameDelayThreshold attribute. Each counter observes a specific SPI. The different flows are configured ON/OFF using RBS MOM parameter IubDataStreams::schHsFlowControlOnOff.

Data Source

NodeB

Source Field

pmHsDataFrameDelayIubSpi12

Source Section

IubDataStreams

pmHsDtFrDelayIubSpi12_15

This PDF gives the dynamic delay for all defined scheduled HS-DSCH data frame flows carried over Iub. This is needed as the basis for adjusting the hsDataFrameDelayThreshold attribute.

Each counter observes a specific SPI. The different flows are configured ON/OFF using RBS MOM parameter IubDataStreams::schHsFlowControlOnOff.

Data Source

NodeB

Source Field

pmHsDataFrameDelayIubSpi12

Source Section

IubDataStreams

pmHsDtFrDelayIubSpi12_16

This PDF gives the dynamic delay for all defined scheduled HS-DSCH data frame flows carried over Iub. This is needed as the basis for adjusting the hsDataFrameDelayThreshold attribute. Each counter observes a specific SPI. The different flows are configured ON/OFF using RBS MOM parameter IubDataStreams::schHsFlowControlOnOff.

Data Source

NodeB

Source Field

pmHsDataFrameDelayIubSpi12

Source Section

IubDataStreams

pmHsDtFrDelayIubSpi13_01

This PDF gives the dynamic delay for all defined scheduled HS-DSCH data frame flows carried over Iub. This is needed as the basis for adjusting the hsDataFrameDelayThreshold attribute. Each counter observes a specific SPI. The different flows are configured ON/OFF using RBS MOM parameter IubDataStreams::schHsFlowControlOnOff.

Data Source

NodeB

Source Field

pmHsDataFrameDelayIubSpi13

Source Section

IubDataStreams

pmHsDtFrDelayIubSpi13_02

This PDF gives the dynamic delay for all defined scheduled HS-DSCH data frame flows carried over Iub. This is needed as the basis for adjusting the hsDataFrameDelayThreshold attribute. Each counter observes a specific SPI. The different flows are configured ON/OFF using RBS MOM parameter IubDataStreams::schHsFlowControlOnOff.

Data Source

NodeB

Source Field

pmHsDataFrameDelayIubSpi13

Source Section

IubDataStreams

pmHsDtFrDelayIubSpi13_03

This PDF gives the dynamic delay for all defined scheduled HS-DSCH data frame flows carried over Iub. This is needed as the basis for adjusting the hsDataFrameDelayThreshold attribute. Each counter observes a specific SPI. The different flows are configured ON/OFF using RBS MOM parameter IubDataStreams::schHsFlowControlOnOff.

Data Source

NodeB

Source Field

pmHsDataFrameDelayIubSpi13

Source Section

IubDataStreams

pmHsDtFrDelayIubSpi13_04

This PDF gives the dynamic delay for all defined scheduled HS-DSCH data frame flows carried over Iub. This is needed as the basis for adjusting the hsDataFrameDelayThreshold attribute. Each counter observes a specific SPI. The different flows are configured ON/OFF using RBS MOM parameter IubDataStreams::schHsFlowControlOnOff.

Data Source

NodeB

Source Field

pmHsDataFrameDelayIubSpi13

Source Section

IubDataStreams

pmHsDtFrDelayIubSpi13_05

This PDF gives the dynamic delay for all defined scheduled HS-DSCH data frame flows carried over Iub. This is needed as the basis for adjusting the hsDataFrameDelayThreshold attribute. Each counter observes a specific SPI. The different flows are configured ON/OFF using RBS MOM parameter IubDataStreams::schHsFlowControlOnOff.

Data Source

NodeB

Source Field

pmHsDataFrameDelayIubSpi13

Source Section

IubDataStreams

pmHsDtFrDelayIubSpi13_06

This PDF gives the dynamic delay for all defined scheduled HS-DSCH data frame flows carried over Iub. This is needed as the basis for adjusting the hsDataFrameDelayThreshold attribute. Each counter observes a specific SPI. The different flows are configured ON/OFF using RBS MOM parameter IubDataStreams::schHsFlowControlOnOff.

Data Source

NodeB

Source Field

pmHsDataFrameDelayIubSpi13

Source Section

IubDataStreams

pmHsDtFrDelayIubSpi13_07

This PDF gives the dynamic delay for all defined scheduled HS-DSCH data frame flows carried over Iub. This is needed as the basis for adjusting the hsDataFrameDelayThreshold attribute. Each counter observes a specific SPI. The different flows are configured ON/OFF using RBS MOM parameter IubDataStreams::schHsFlowControlOnOff.

Data Source

NodeB

Source Field

pmHsDataFrameDelayIubSpi13

Source Section

IubDataStreams

pmHsDtFrDelayIubSpi13_08

This PDF gives the dynamic delay for all defined scheduled HS-DSCH data frame flows carried over Iub. This is needed as the basis for adjusting the hsDataFrameDelayThreshold attribute. Each counter observes a specific SPI. The different flows are configured ON/OFF using RBS MOM parameter IubDataStreams::schHsFlowControlOnOff.

Data Source

NodeB

Source Field

pmHsDataFrameDelayIubSpi13

Source Section

IubDataStreams

pmHsDtFrDelayIubSpi13_09

This PDF gives the dynamic delay for all defined scheduled HS-DSCH data frame flows carried over Iub. This is needed as the basis for adjusting the hsDataFrameDelayThreshold attribute. Each counter observes a specific SPI. The different flows are configured ON/OFF using RBS MOM parameter IubDataStreams::schHsFlowControlOnOff.

Data Source

NodeB

Source Field

pmHsDataFrameDelayIubSpi13

Source Section

IubDataStreams

pmHsDtFrDelayIubSpi13_10

This PDF gives the dynamic delay for all defined scheduled HS-DSCH data frame flows carried over Iub. This is needed as the basis for adjusting the hsDataFrameDelayThreshold attribute. Each counter observes a specific SPI. The different flows are configured ON/OFF using RBS MOM parameter IubDataStreams::schHsFlowControlOnOff.

Data Source

NodeB

Source Field

pmHsDataFrameDelayIubSpi13

Source Section

IubDataStreams

pmHsDtFrDelayIubSpi13_11

This PDF gives the dynamic delay for all defined scheduled HS-DSCH data frame flows carried over Iub. This is needed as the basis for adjusting the hsDataFrameDelayThreshold attribute. Each counter observes a specific SPI. The different flows are configured ON/OFF using RBS MOM parameter IubDataStreams::schHsFlowControlOnOff.

Data Source

NodeB

Source Field

pmHsDataFrameDelayIubSpi13

Source Section

IubDataStreams

pmHsDtFrDelayIubSpi13_12

This PDF gives the dynamic delay for all defined scheduled HS-DSCH data frame flows carried over Iub. This is needed as the basis for adjusting the hsDataFrameDelayThreshold attribute.

Each counter observes a specific SPI. The different flows are configured ON/OFF using RBS MOM parameter IubDataStreams::schHsFlowControlOnOff.

Data Source

NodeB

Source Field

pmHsDataFrameDelayIubSpi13

Source Section

IubDataStreams

pmHsDtFrDelayIubSpi13_13

This PDF gives the dynamic delay for all defined scheduled HS-DSCH data frame flows carried over Iub. This is needed as the basis for adjusting the hsDataFrameDelayThreshold attribute. Each counter observes a specific SPI. The different flows are configured ON/OFF using RBS MOM parameter IubDataStreams::schHsFlowControlOnOff.

Data Source

NodeB

Source Field

pmHsDataFrameDelayIubSpi13

Source Section

IubDataStreams

pmHsDtFrDelayIubSpi13_14

This PDF gives the dynamic delay for all defined scheduled HS-DSCH data frame flows carried over Iub. This is needed as the basis for adjusting the hsDataFrameDelayThreshold attribute. Each counter observes a specific SPI. The different flows are configured ON/OFF using RBS MOM parameter IubDataStreams::schHsFlowControlOnOff.

Data Source

NodeB

Source Field

pmHsDataFrameDelayIubSpi13

Source Section

IubDataStreams

pmHsDtFrDelayIubSpi13_15

This PDF gives the dynamic delay for all defined scheduled HS-DSCH data frame flows carried over Iub. This is needed as the basis for adjusting the hsDataFrameDelayThreshold attribute. Each counter observes a specific SPI. The different flows are configured ON/OFF using RBS MOM parameter IubDataStreams::schHsFlowControlOnOff.

Data Source

NodeB

Source Field

pmHsDataFrameDelayIubSpi13

Source Section

IubDataStreams

pmHsDtFrDelayIubSpi13_16

This PDF gives the dynamic delay for all defined scheduled HS-DSCH data frame flows carried over Iub. This is needed as the basis for adjusting the hsDataFrameDelayThreshold attribute. Each counter observes a specific SPI. The different flows are configured ON/OFF using RBS MOM parameter IubDataStreams::schHsFlowControlOnOff.

Data Source

NodeB

Source Field

pmHsDataFrameDelayIubSpi13

Source Section

IubDataStreams

pmHsDtFrDelayIubSpi14_01

This PDF gives the dynamic delay for all defined scheduled HS-DSCH data frame flows carried over Iub. This is needed as the basis for adjusting the hsDataFrameDelayThreshold attribute. Each counter observes a specific SPI. The different flows are configured ON/OFF using RBS MOM parameter IubDataStreams::schHsFlowControlOnOff.

Data Source

NodeB

Source Field

pmHsDataFrameDelayIubSpi14

Source Section

IubDataStreams

pmHsDtFrDelayIubSpi14_02

This PDF gives the dynamic delay for all defined scheduled HS-DSCH data frame flows carried over Iub. This is needed as the basis for adjusting the hsDataFrameDelayThreshold attribute. Each counter observes a specific SPI. The different flows are configured ON/OFF using RBS MOM parameter IubDataStreams::schHsFlowControlOnOff.

Data Source

NodeB

Source Field

pmHsDataFrameDelayIubSpi14

Source Section

IubDataStreams

pmHsDtFrDelayIubSpi14_03

This PDF gives the dynamic delay for all defined scheduled HS-DSCH data frame flows carried over Iub. This is needed as the basis for adjusting the hsDataFrameDelayThreshold attribute. Each counter observes a specific SPI. The different flows are configured ON/OFF using RBS MOM parameter IubDataStreams::schHsFlowControlOnOff.

Data Source

NodeB

Source Field

pmHsDataFrameDelayIubSpi14

Source Section

IubDataStreams

pmHsDtFrDelayIubSpi14_04

This PDF gives the dynamic delay for all defined scheduled HS-DSCH data frame flows carried over Iub. This is needed as the basis for adjusting the hsDataFrameDelayThreshold attribute. Each counter observes a specific SPI. The different flows are configured ON/OFF using RBS MOM parameter IubDataStreams::schHsFlowControlOnOff.

Data Source

NodeB

Source Field

pmHsDataFrameDelayIubSpi14

Source Section

IubDataStreams

pmHsDtFrDelayIubSpi14_05

This PDF gives the dynamic delay for all defined scheduled HS-DSCH data frame flows carried over Iub. This is needed as the basis for adjusting the hsDataFrameDelayThreshold attribute. Each counter observes a specific SPI. The different flows are configured ON/OFF using RBS MOM parameter IubDataStreams::schHsFlowControlOnOff.

Data Source

NodeB

Source Field

pmHsDataFrameDelayIubSpi14

Source Section

IubDataStreams

pmHsDtFrDelayIubSpi14_06

This PDF gives the dynamic delay for all defined scheduled HS-DSCH data frame flows carried over Iub. This is needed as the basis for adjusting the hsDataFrameDelayThreshold attribute. Each counter observes a specific SPI. The different flows are configured ON/OFF using RBS MOM parameter IubDataStreams::schHsFlowControlOnOff.

Data Source

NodeB

Source Field

pmHsDataFrameDelayIubSpi14

Source Section

IubDataStreams

pmHsDtFrDelayIubSpi14_07

This PDF gives the dynamic delay for all defined scheduled HS-DSCH data frame flows carried over Iub. This is needed as the basis for adjusting the hsDataFrameDelayThreshold attribute. Each counter observes a specific SPI. The different flows are configured ON/OFF using RBS MOM parameter IubDataStreams::schHsFlowControlOnOff.

Data Source

NodeB

Source Field

pmHsDataFrameDelayIubSpi14

Source Section

IubDataStreams

pmHsDtFrDelayIubSpi14_08

This PDF gives the dynamic delay for all defined scheduled HS-DSCH data frame flows carried over Iub. This is needed as the basis for adjusting the hsDataFrameDelayThreshold attribute. Each counter observes a specific SPI. The different flows are configured ON/OFF using RBS MOM parameter IubDataStreams::schHsFlowControlOnOff.

Data Source

NodeB

Source Field

pmHsDataFrameDelayIubSpi14

Source Section

IubDataStreams

pmHsDtFrDelayIubSpi14_09

This PDF gives the dynamic delay for all defined scheduled HS-DSCH data frame flows carried over Iub. This is needed as the basis for adjusting the hsDataFrameDelayThreshold attribute.

Each counter observes a specific SPI. The different flows are configured ON/OFF using RBS MOM parameter IubDataStreams::schHsFlowControlOnOff.

Data Source

NodeB

Source Field

pmHsDataFrameDelayIubSpi14

Source Section

IubDataStreams

pmHsDtFrDelayIubSpi14_10

This PDF gives the dynamic delay for all defined scheduled HS-DSCH data frame flows carried over Iub. This is needed as the basis for adjusting the hsDataFrameDelayThreshold attribute. Each counter observes a specific SPI. The different flows are configured ON/OFF using RBS MOM parameter IubDataStreams::schHsFlowControlOnOff.

Data Source

NodeB

Source Field

pmHsDataFrameDelayIubSpi14

Source Section

IubDataStreams

pmHsDtFrDelayIubSpi14_11

This PDF gives the dynamic delay for all defined scheduled HS-DSCH data frame flows carried over Iub. This is needed as the basis for adjusting the hsDataFrameDelayThreshold attribute. Each counter observes a specific SPI. The different flows are configured ON/OFF using RBS MOM parameter IubDataStreams::schHsFlowControlOnOff.

Data Source

NodeB

Source Field

pmHsDataFrameDelayIubSpi14

Source Section

IubDataStreams

pmHsDtFrDelayIubSpi14_12

This PDF gives the dynamic delay for all defined scheduled HS-DSCH data frame flows carried over Iub. This is needed as the basis for adjusting the hsDataFrameDelayThreshold attribute. Each counter observes a specific SPI. The different flows are configured ON/OFF using RBS MOM parameter IubDataStreams::schHsFlowControlOnOff.

Data Source

NodeB

Source Field

pmHsDataFrameDelayIubSpi14

Source Section

IubDataStreams

pmHsDtFrDelayIubSpi14_13

This PDF gives the dynamic delay for all defined scheduled HS-DSCH data frame flows carried over Iub. This is needed as the basis for adjusting the hsDataFrameDelayThreshold attribute. Each counter observes a specific SPI. The different flows are configured ON/OFF using RBS MOM parameter IubDataStreams::schHsFlowControlOnOff.

Data Source

NodeB

Source Field

pmHsDataFrameDelayIubSpi14

Source Section

IubDataStreams

pmHsDtFrDelayIubSpi14_14

This PDF gives the dynamic delay for all defined scheduled HS-DSCH data frame flows carried over Iub. This is needed as the basis for adjusting the hsDataFrameDelayThreshold attribute. Each counter observes a specific SPI. The different flows are configured ON/OFF using RBS MOM parameter IubDataStreams::schHsFlowControlOnOff.

Data Source

NodeB

Source Field

pmHsDataFrameDelayIubSpi14

Source Section

IubDataStreams

pmHsDtFrDelayIubSpi14_15

This PDF gives the dynamic delay for all defined scheduled HS-DSCH data frame flows carried over Iub. This is needed as the basis for adjusting the hsDataFrameDelayThreshold attribute. Each counter observes a specific SPI. The different flows are configured ON/OFF using RBS MOM parameter IubDataStreams::schHsFlowControlOnOff.

Data Source

NodeB

Source Field

pmHsDataFrameDelayIubSpi14

Source Section

IubDataStreams

pmHsDtFrDelayIubSpi14_16

This PDF gives the dynamic delay for all defined scheduled HS-DSCH data frame flows carried over Iub. This is needed as the basis for adjusting the hsDataFrameDelayThreshold attribute. Each counter observes a specific SPI. The different flows are configured ON/OFF using RBS MOM parameter IubDataStreams::schHsFlowControlOnOff.

Data Source

NodeB

Source Field

pmHsDataFrameDelayIubSpi14

Source Section

IubDataStreams

pmHsDtFrDelayIubSpi15_01

This PDF gives the dynamic delay for all defined scheduled HS-DSCH data frame flows carried over Iub. This is needed as the basis for adjusting the hsDataFrameDelayThreshold attribute. Each counter observes a specific SPI. The different flows are configured ON/OFF using RBS MOM parameter IubDataStreams::schHsFlowControlOnOff.

Data Source

NodeB

Source Field

pmHsDataFrameDelayIubSpi15

Source Section

IubDataStreams

pmHsDtFrDelayIubSpi15_02

This PDF gives the dynamic delay for all defined scheduled HS-DSCH data frame flows carried over Iub. This is needed as the basis for adjusting the hsDataFrameDelayThreshold attribute. Each counter observes a specific SPI. The different flows are configured ON/OFF using RBS MOM parameter IubDataStreams::schHsFlowControlOnOff.

Data Source

NodeB

Source Field

pmHsDataFrameDelayIubSpi15

Source Section

IubDataStreams

pmHsDtFrDelayIubSpi15_03

This PDF gives the dynamic delay for all defined scheduled HS-DSCH data frame flows carried over Iub. This is needed as the basis for adjusting the hsDataFrameDelayThreshold attribute. Each counter observes a specific SPI. The different flows are configured ON/OFF using RBS MOM parameter IubDataStreams::schHsFlowControlOnOff.

Data Source

NodeB

Source Field

pmHsDataFrameDelayIubSpi15

Source Section

IubDataStreams

pmHsDtFrDelayIubSpi15_04

This PDF gives the dynamic delay for all defined scheduled HS-DSCH data frame flows carried over Iub. This is needed as the basis for adjusting the hsDataFrameDelayThreshold attribute. Each counter observes a specific SPI. The different flows are configured ON/OFF using RBS MOM parameter IubDataStreams::schHsFlowControlOnOff.

Data Source

NodeB

Source Field

pmHsDataFrameDelayIubSpi15

Source Section

IubDataStreams

pmHsDtFrDelayIubSpi15_05

This PDF gives the dynamic delay for all defined scheduled HS-DSCH data frame flows carried over Iub. This is needed as the basis for adjusting the hsDataFrameDelayThreshold attribute. Each counter observes a specific SPI. The different flows are configured ON/OFF using RBS MOM parameter IubDataStreams::schHsFlowControlOnOff.

Data Source

NodeB

Source Field

pmHsDataFrameDelayIubSpi15

Source Section

IubDataStreams

pmHsDtFrDelayIubSpi15_06

This PDF gives the dynamic delay for all defined scheduled HS-DSCH data frame flows carried over Iub. This is needed as the basis for adjusting the hsDataFrameDelayThreshold attribute.

Each counter observes a specific SPI. The different flows are configured ON/OFF using RBS MOM parameter IubDataStreams::schHsFlowControlOnOff.

Data Source

NodeB

Source Field

pmHsDataFrameDelayIubSpi15

Source Section

IubDataStreams

pmHsDtFrDelayIubSpi15_07

This PDF gives the dynamic delay for all defined scheduled HS-DSCH data frame flows carried over Iub. This is needed as the basis for adjusting the hsDataFrameDelayThreshold attribute. Each counter observes a specific SPI. The different flows are configured ON/OFF using RBS MOM parameter IubDataStreams::schHsFlowControlOnOff.

Data Source

NodeB

Source Field

pmHsDataFrameDelayIubSpi15

Source Section

IubDataStreams

pmHsDtFrDelayIubSpi15_08

This PDF gives the dynamic delay for all defined scheduled HS-DSCH data frame flows carried over Iub. This is needed as the basis for adjusting the hsDataFrameDelayThreshold attribute. Each counter observes a specific SPI. The different flows are configured ON/OFF using RBS MOM parameter IubDataStreams::schHsFlowControlOnOff.

Data Source

NodeB

Source Field

pmHsDataFrameDelayIubSpi15

Source Section

IubDataStreams

pmHsDtFrDelayIubSpi15_09

This PDF gives the dynamic delay for all defined scheduled HS-DSCH data frame flows carried over Iub. This is needed as the basis for adjusting the hsDataFrameDelayThreshold attribute. Each counter observes a specific SPI. The different flows are configured ON/OFF using RBS MOM parameter IubDataStreams::schHsFlowControlOnOff.

Data Source

NodeB

Source Field

pmHsDataFrameDelayIubSpi15

Source Section

IubDataStreams

pmHsDtFrDelayIubSpi15_10

This PDF gives the dynamic delay for all defined scheduled HS-DSCH data frame flows carried over Iub. This is needed as the basis for adjusting the hsDataFrameDelayThreshold attribute. Each counter observes a specific SPI. The different flows are configured ON/OFF using RBS MOM parameter IubDataStreams::schHsFlowControlOnOff.

Data Source

NodeB

Source Field

pmHsDataFrameDelayIubSpi15

Source Section

IubDataStreams

pmHsDtFrDelayIubSpi15_11

This PDF gives the dynamic delay for all defined scheduled HS-DSCH data frame flows carried over Iub. This is needed as the basis for adjusting the hsDataFrameDelayThreshold attribute. Each counter observes a specific SPI. The different flows are configured ON/OFF using RBS MOM parameter IubDataStreams::schHsFlowControlOnOff.

Data Source

NodeB

Source Field

pmHsDataFrameDelayIubSpi15

Source Section

IubDataStreams

pmHsDtFrDelayIubSpi15_12

This PDF gives the dynamic delay for all defined scheduled HS-DSCH data frame flows carried over Iub. This is needed as the basis for adjusting the hsDataFrameDelayThreshold attribute. Each counter observes a specific SPI. The different flows are configured ON/OFF using RBS MOM parameter IubDataStreams::schHsFlowControlOnOff.

Data Source

NodeB

Source Field

pmHsDataFrameDelayIubSpi15

Source Section

IubDataStreams

pmHsDtFrDelayIubSpi15_13

This PDF gives the dynamic delay for all defined scheduled HS-DSCH data frame flows carried over Iub. This is needed as the basis for adjusting the hsDataFrameDelayThreshold attribute. Each counter observes a specific SPI. The different flows are configured ON/OFF using RBS MOM parameter IubDataStreams::schHsFlowControlOnOff.

Data Source

NodeB

Source Field

pmHsDataFrameDelayIubSpi15

Source Section

IubDataStreams

pmHsDtFrDelayIubSpi15_14

This PDF gives the dynamic delay for all defined scheduled HS-DSCH data frame flows carried over Iub. This is needed as the basis for adjusting the hsDataFrameDelayThreshold attribute. Each counter observes a specific SPI. The different flows are configured ON/OFF using RBS MOM parameter IubDataStreams::schHsFlowControlOnOff.

Data Source

NodeB

Source Field

pmHsDataFrameDelayIubSpi15

Source Section

IubDataStreams

pmHsDtFrDelayIubSpi15_15

This PDF gives the dynamic delay for all defined scheduled HS-DSCH data frame flows carried over Iub. This is needed as the basis for adjusting the hsDataFrameDelayThreshold attribute. Each counter observes a specific SPI. The different flows are configured ON/OFF using RBS MOM parameter IubDataStreams::schHsFlowControlOnOff.

Data Source

NodeB

Source Field

pmHsDataFrameDelayIubSpi15

Source Section

IubDataStreams

pmHsDtFrDelayIubSpi15_16

This PDF gives the dynamic delay for all defined scheduled HS-DSCH data frame flows carried over Iub. This is needed as the basis for adjusting the hsDataFrameDelayThreshold attribute. Each counter observes a specific SPI. The different flows are configured ON/OFF using RBS MOM parameter IubDataStreams::schHsFlowControlOnOff.

Data Source

NodeB

Source Field

pmHsDataFrameDelayIubSpi15

Source Section

IubDataStreams

pmHsDtFrLostSpi00

The number of high-speed data frames lost by the RBS in the Iub interface. Each counter observes a specific SPI. The different flows are configured ON/OFF using RBS MOM parameter IubDataStreams::schHsFlowControlOnOff.

Data Source

NodeB

Source Field

pmHsDataFramesLostSpi00

Source Section

IubDataStreams

pmHsDtFrLostSpi01

The number of high-speed data frames lost by the RBS in the Iub interface. Each counter observes a specific SPI. The different flows are configured ON/OFF using RBS MOM parameter IubDataStreams::schHsFlowControlOnOff.

Data Source

NodeB

Source Field

pmHsDataFramesLostSpi01

Source Section

IubDataStreams

pmHsDtFrLostSpi02

The number of high-speed data frames lost by the RBS in the Iub interface. Each counter observes a specific SPI. The different flows are configured ON/OFF using RBS MOM parameter IubDataStreams::schHsFlowControlOnOff.

Data Source

NodeB

Source Field

pmHsDataFramesLostSpi02

Source Section

IubDataStreams

pmHsDtFrLostSpi03

The number of high-speed data frames lost by the RBS in the Iub interface. Each counter observes a specific SPI. The different flows are configured ON/OFF using RBS MOM parameter IubDataStreams::schHsFlowControlOnOff.

Data Source

NodeB

Source Field

pmHsDataFramesLostSpi03

Source Section

IubDataStreams

pmHsDtFrLostSpi04

The number of high-speed data frames lost by the RBS in the Iub interface. Each counter observes a specific SPI. The different flows are configured ON/OFF using RBS MOM parameter IubDataStreams::schHsFlowControlOnOff.

Data Source

NodeB

Source Field

pmHsDataFramesLostSpi04

Source Section

IubDataStreams

pmHsDtFrLostSpi05

The number of high-speed data frames lost by the RBS in the Iub interface. Each counter observes a specific SPI. The different flows are configured ON/OFF using RBS MOM parameter IubDataStreams::schHsFlowControlOnOff.

Data Source

NodeB

Source Field

pmHsDataFramesLostSpi05

Source Section

IubDataStreams

pmHsDtFrLostSpi06

The number of high-speed data frames lost by the RBS in the Iub interface. Each counter observes a specific SPI. The different flows are configured ON/OFF using RBS MOM parameter IubDataStreams::schHsFlowControlOnOff.

Data Source

NodeB

Source Field

pmHsDataFramesLostSpi06

Source Section

IubDataStreams

pmHsDtFrLostSpi07

The number of high-speed data frames lost by the RBS in the Iub interface. Each counter observes a specific SPI. The different flows are configured ON/OFF using RBS MOM parameter IubDataStreams::schHsFlowControlOnOff.

Data Source

NodeB

Source Field

pmHsDataFramesLostSpi07

Source Section

IubDataStreams

pmHsDtFrLostSpi08

The number of high-speed data frames lost by the RBS in the Iub interface. Each counter observes a specific SPI. The different flows are configured ON/OFF using RBS MOM parameter IubDataStreams::schHsFlowControlOnOff.

Data Source

NodeB

Source Field

pmHsDataFramesLostSpi08

Source Section

IubDataStreams

pmHsDtFrLostSpi09

The number of high-speed data frames lost by the RBS in the Iub interface. Each counter observes a specific SPI. The different flows are configured ON/OFF using RBS MOM parameter IubDataStreams::schHsFlowControlOnOff.

Data Source

NodeB

Source Field

pmHsDataFramesLostSpi09

Source Section

IubDataStreams

pmHsDtFrLostSpi10

The number of high-speed data frames lost by the RBS in the Iub interface. Each counter observes a specific SPI. The different flows are configured ON/OFF using RBS MOM parameter IubDataStreams::schHsFlowControlOnOff.

Data Source

NodeB

Source Field

pmHsDataFramesLostSpi10

Source Section

IubDataStreams

pmHsDtFrLostSpi11

The number of high-speed data frames lost by the RBS in the Iub interface. Each counter observes a specific SPI. The different flows are configured ON/OFF using RBS MOM parameter IubDataStreams::schHsFlowControlOnOff.

Data Source

NodeB

Source Field

pmHsDataFramesLostSpi11

Source Section

IubDataStreams

pmHsDtFrLostSpi12

The number of high-speed data frames lost by the RBS in the Iub interface. Each counter observes a specific SPI. The different flows are configured ON/OFF using RBS MOM parameter IubDataStreams::schHsFlowControlOnOff.

Data Source

NodeB

Source Field

pmHsDataFramesLostSpi12

Source Section

IubDataStreams

pmHsDtFrLostSpi13

The number of high-speed data frames lost by the RBS in the Iub interface. Each counter observes a specific SPI. The different flows are configured ON/OFF using RBS MOM parameter IubDataStreams::schHsFlowControlOnOff.

Data Source

NodeB

Source Field

pmHsDataFramesLostSpi13

Source Section

IubDataStreams

pmHsDtFrLostSpi14

The number of high-speed data frames lost by the RBS in the Iub interface. Each counter observes a specific SPI. The different flows are configured ON/OFF using RBS MOM parameter IubDataStreams::schHsFlowControlOnOff.

Data Source

NodeB

Source Field

pmHsDataFramesLostSpi14

Source Section

IubDataStreams

pmHsDtFrLostSpi15

The number of high-speed data frames lost by the RBS in the Iub interface. Each counter observes a specific SPI. The different flows are configured ON/OFF using RBS MOM parameter IubDataStreams::schHsFlowControlOnOff.

Data Source

NodeB

Source Field

pmHsDataFramesLostSpi15

Source Section

IubDataStreams

pmIubMacdPduRbsReceivedBits_000

Received numbers of Iub Media Access Control-dedicated Power Distribution Unit (MAC-d PDU) bits every second in the range 0 to 200 kbps

Data Source

NodeB

Source Field

pmIubMacdPduRbsReceivedBits

Source Section

IubDataStreams

pmIubMacdPduRbsReceivedBits_001

Received numbers of Iub Media Access Control-dedicated Power Distribution Unit (MAC-d PDU) bits every second in the range 200 to 400 kbps

Data Source

NodeB

Source Field

pmIubMacdPduRbsReceivedBits

Source Section

IubDataStreams

pmIubMacdPduRbsReceivedBits_002

Received numbers of Iub Media Access Control-dedicated Power Distribution Unit (MAC-d PDU) bits every second in the range 400 to 600 kbps

Data Source

NodeB

Source Field

pmIubMacdPduRbsReceivedBits

Source Section

IubDataStreams

pmIubMacdPduRbsReceivedBits_003

Received numbers of Iub Media Access Control-dedicated Power Distribution Unit (MAC-d PDU) bits every second in the range 600 to 800 kbps

Data Source

NodeB

Source Field

pmIubMacdPduRbsReceivedBits

Source Section

IubDataStreams

pmIubMacdPduRbsReceivedBits_004

Received numbers of Iub Media Access Control-dedicated Power Distribution Unit (MAC-d PDU) bits every second in the range 800 to 1000 kbps

Data Source

NodeB

Source Field

pmIubMacdPduRbsReceivedBits

Source Section

IubDataStreams

pmIubMacdPduRbsReceivedBits_005

Received numbers of Iub Media Access Control-dedicated Power Distribution Unit (MAC-d PDU) bits every second in the range 1000 to 1200 kbps

Data Source

NodeB

Source Field

pmIubMacdPduRbsReceivedBits

Source Section

IubDataStreams

pmIubMacdPduRbsReceivedBits_006

Received numbers of Iub Media Access Control-dedicated Power Distribution Unit (MAC-d PDU) bits every second in the range 1200 to 1400 kbps

Data Source

NodeB

Source Field

pmIubMacdPduRbsReceivedBits

Source Section

IubDataStreams

pmIubMacdPduRbsReceivedBits_007

Received numbers of Iub Media Access Control-dedicated Power Distribution Unit (MAC-d PDU) bits every second in the range 1400 to 1600 kbps

Data Source

NodeB

Source Field

pmIubMacdPduRbsReceivedBits

Source Section

IubDataStreams

pmIubMacdPduRbsReceivedBits_008

Received numbers of Iub Media Access Control-dedicated Power Distribution Unit (MAC-d PDU) bits every second in the range 1600 to 1800 kbps

Data Source

NodeB

Source Field

pmIubMacdPduRbsReceivedBits

Source Section

IubDataStreams

pmIubMacdPduRbsReceivedBits_009

Received numbers of Iub Media Access Control-dedicated Power Distribution Unit (MAC-d PDU) bits every second in the range 1800 to 2000 kbps

Data Source

NodeB

Source Field

pmIubMacdPduRbsReceivedBits

Source Section

IubDataStreams

pmIubMacdPduRbsReceivedBits_010

Received numbers of Iub Media Access Control-dedicated Power Distribution Unit (MAC-d PDU) bits every second in the range 2000 to 2200 kbps

Data Source

NodeB

Source Field

pmIubMacdPduRbsReceivedBits

Source Section

IubDataStreams

pmIubMacdPduRbsReceivedBits_011

Received numbers of Iub Media Access Control-dedicated Power Distribution Unit (MAC-d PDU) bits every second in the range 2200 to 2400 kbps

Data Source

NodeB

Source Field

pmIubMacdPduRbsReceivedBits

Source Section

IubDataStreams

pmIubMacdPduRbsReceivedBits_012

Received numbers of Iub Media Access Control-dedicated Power Distribution Unit (MAC-d PDU) bits every second in the range 2400 to 2600 kbps

Data Source

NodeB

Source Field

pmIubMacdPduRbsReceivedBits

Source Section

IubDataStreams

pmIubMacdPduRbsReceivedBits_013

Received numbers of Iub Media Access Control-dedicated Power Distribution Unit (MAC-d PDU) bits every second in the range 2600 to 2800 kbps

Data Source

NodeB

Source Field

pmIubMacdPduRbsReceivedBits

Source Section

IubDataStreams

pmIubMacdPduRbsReceivedBits_014

Received numbers of Iub Media Access Control-dedicated Power Distribution Unit (MAC-d PDU) bits every second in the range 2800 to 3000 kbps

Data Source

NodeB

Source Field

pmIubMacdPduRbsReceivedBits

Source Section

IubDataStreams

pmIubMacdPduRbsReceivedBits_015

Received numbers of Iub Media Access Control-dedicated Power Distribution Unit (MAC-d PDU) bits every second in the range 3000 to 3200 kbps

Data Source

NodeB

Source Field

pmIubMacdPduRbsReceivedBits

Source Section

IubDataStreams

pmIubMacdPduRbsReceivedBits_016

Received numbers of Iub Media Access Control-dedicated Power Distribution Unit (MAC-d PDU) bits every second in the range 3200 to 3400 kbps

Data Source

NodeB

Source Field

pmIubMacdPduRbsReceivedBits

Source Section

IubDataStreams

pmIubMacdPduRbsReceivedBits_017

Received numbers of Iub Media Access Control-dedicated Power Distribution Unit (MAC-d PDU) bits every second in the range 3400 to 3600 kbps

Data Source

NodeB

Source Field

pmIubMacdPduRbsReceivedBits

Source Section

IubDataStreams

pmIubMacdPduRbsReceivedBits_018

Received numbers of Iub Media Access Control-dedicated Power Distribution Unit (MAC-d PDU) bits every second in the range 3600 to 3800 kbps

Data Source

NodeB

Source Field

pmIubMacdPduRbsReceivedBits

Source Section

IubDataStreams

pmIubMacdPduRbsReceivedBits_019

Received numbers of Iub Media Access Control-dedicated Power Distribution Unit (MAC-d PDU) bits every second in the range 3800 to 4000 kbps

Data Source

NodeB

Source Field

pmIubMacdPduRbsReceivedBits

Source Section

IubDataStreams

pmIubMacdPduRbsReceivedBits_020

Received numbers of Iub Media Access Control-dedicated Power Distribution Unit (MAC-d PDU) bits every second in the range 4000 to 4200 kbps

Data Source

NodeB

Source Field

pmIubMacdPduRbsReceivedBits

Source Section

IubDataStreams

pmIubMacdPduRbsReceivedBits_021

Received numbers of Iub Media Access Control-dedicated Power Distribution Unit (MAC-d PDU) bits every second in the range 4200 to 4400 kbps

Data Source

NodeB

Source Field

pmIubMacdPduRbsReceivedBits

Source Section

IubDataStreams

pmIubMacdPduRbsReceivedBits_022

Received numbers of Iub Media Access Control-dedicated Power Distribution Unit (MAC-d PDU) bits every second in the range 4400 to 4600 kbps

Data Source

NodeB

Source Field

pmIubMacdPduRbsReceivedBits

Source Section

IubDataStreams

pmIubMacdPduRbsReceivedBits_023

Received numbers of Iub Media Access Control-dedicated Power Distribution Unit (MAC-d PDU) bits every second in the range 4600 to 4800 kbps

Data Source

NodeB

Source Field

pmIubMacdPduRbsReceivedBits

Source Section

IubDataStreams

pmIubMacdPduRbsReceivedBits_024

Received numbers of Iub Media Access Control-dedicated Power Distribution Unit (MAC-d PDU) bits every second in the range 4800 to 5000 kbps

Data Source

NodeB

Source Field

pmIubMacdPduRbsReceivedBits

Source Section

IubDataStreams

pmIubMacdPduRbsReceivedBits_025

Received numbers of Iub Media Access Control-dedicated Power Distribution Unit (MAC-d PDU) bits every second in the range 5000 to 5200 kbps

Data Source

NodeB

Source Field

pmIubMacdPduRbsReceivedBits

Source Section

IubDataStreams

pmIubMacdPduRbsReceivedBits_026

Received numbers of Iub Media Access Control-dedicated Power Distribution Unit (MAC-d PDU) bits every second in the range 5200 to 5400 kbps

Data Source

NodeB

Source Field

pmIubMacdPduRbsReceivedBits

Source Section

IubDataStreams

pmIubMacdPduRbsReceivedBits_027

Received numbers of Iub Media Access Control-dedicated Power Distribution Unit (MAC-d PDU) bits every second in the range 5400 to 5600 kbps

Data Source

NodeB

Source Field

pmIubMacdPduRbsReceivedBits

Source Section

IubDataStreams

pmIubMacdPduRbsReceivedBits_028

Received numbers of Iub Media Access Control-dedicated Power Distribution Unit (MAC-d PDU) bits every second in the range 5600 to 5800 kbps

Data Source

NodeB

Source Field

pmIubMacdPduRbsReceivedBits

Source Section

IubDataStreams

pmIubMacdPduRbsReceivedBits_029

Received numbers of Iub Media Access Control-dedicated Power Distribution Unit (MAC-d PDU) bits every second in the range 5800 to 6000 kbps

Data Source

NodeB

Source Field

pmIubMacdPduRbsReceivedBits

Source Section

IubDataStreams

pmIubMacdPduRbsReceivedBits_030

Received numbers of Iub Media Access Control-dedicated Power Distribution Unit (MAC-d PDU) bits every second in the range 6000 to 6200 kbps

Data Source

NodeB

Source Field

pmIubMacdPduRbsReceivedBits

Source Section

IubDataStreams

pmIubMacdPduRbsReceivedBits_031

Received numbers of Iub Media Access Control-dedicated Power Distribution Unit (MAC-d PDU) bits every second in the range 6200 to 6400 kbps

Data Source

NodeB

Source Field

pmIubMacdPduRbsReceivedBits

Source Section

IubDataStreams

pmIubMacdPduRbsReceivedBits_032

Received numbers of Iub Media Access Control-dedicated Power Distribution Unit (MAC-d PDU) bits every second in the range 6400 to 6600 kbps

Data Source

NodeB

Source Field

pmIubMacdPduRbsReceivedBits

Source Section

IubDataStreams

pmIubMacdPduRbsReceivedBits_033

Received numbers of Iub Media Access Control-dedicated Power Distribution Unit (MAC-d PDU) bits every second in the range 6600 to 6800 kbps

Data Source

NodeB

Source Field

pmIubMacdPduRbsReceivedBits

Source Section

IubDataStreams

pmIubMacdPduRbsReceivedBits_034

Received numbers of Iub Media Access Control-dedicated Power Distribution Unit (MAC-d PDU) bits every second in the range 6800 to 7000 kbps

Data Source

NodeB

Source Field

pmIubMacdPduRbsReceivedBits

Source Section

IubDataStreams

pmIubMacdPduRbsReceivedBits_035

Received numbers of Iub Media Access Control-dedicated Power Distribution Unit (MAC-d PDU) bits every second in the range 7000 to 7200 kbps

Data Source

NodeB

Source Field

pmIubMacdPduRbsReceivedBits

Source Section

IubDataStreams

pmIubMacdPduRbsReceivedBits_036

Received numbers of Iub Media Access Control-dedicated Power Distribution Unit (MAC-d PDU) bits every second in the range 7200 to 7400 kbps

Data Source

NodeB

Source Field

pmIubMacdPduRbsReceivedBits

Source Section

IubDataStreams

pmIubMacdPduRbsReceivedBits_037

Received numbers of Iub Media Access Control-dedicated Power Distribution Unit (MAC-d PDU) bits every second in the range 7400 to 7600 kbps

Data Source

NodeB

Source Field

pmIubMacdPduRbsReceivedBits

Source Section

IubDataStreams

pmIubMacdPduRbsReceivedBits_038

Received numbers of Iub Media Access Control-dedicated Power Distribution Unit (MAC-d PDU) bits every second in the range 7600 to 7800 kbps

Data Source

NodeB

Source Field

pmIubMacdPduRbsReceivedBits

Source Section

IubDataStreams

pmIubMacdPduRbsReceivedBits_039

Received numbers of Iub Media Access Control-dedicated Power Distribution Unit (MAC-d PDU) bits every second in the range 7800 to 8000 kbps

Data Source

NodeB

Source Field

pmIubMacdPduRbsReceivedBits

Source Section

IubDataStreams

pmIubMacdPduRbsReceivedBits_040

Received numbers of Iub Media Access Control-dedicated Power Distribution Unit (MAC-d PDU) bits every second in the range 8000 to 8200 kbps

Data Source

NodeB

Source Field

pmIubMacdPduRbsReceivedBits

Source Section

IubDataStreams

pmIubMacdPduRbsReceivedBits_041

Received numbers of Iub Media Access Control-dedicated Power Distribution Unit (MAC-d PDU) bits every second in the range 8200 to 8400 kbps

Data Source

NodeB

Source Field

pmIubMacdPduRbsReceivedBits

Source Section

IubDataStreams

pmIubMacdPduRbsReceivedBits_042

Received numbers of Iub Media Access Control-dedicated Power Distribution Unit (MAC-d PDU) bits every second in the range 8400 to 8600 kbps

Data Source

NodeB

Source Field

pmIubMacdPduRbsReceivedBits

Source Section

IubDataStreams

pmIubMacdPduRbsReceivedBits_043

Received numbers of Iub Media Access Control-dedicated Power Distribution Unit (MAC-d PDU) bits every second in the range 8600 to 8800 kbps

Data Source

NodeB

Source Field

pmIubMacdPduRbsReceivedBits

Source Section

IubDataStreams

pmIubMacdPduRbsReceivedBits_044

Received numbers of Iub Media Access Control-dedicated Power Distribution Unit (MAC-d PDU) bits every second in the range 8800 to 9000 kbps

Data Source

NodeB

Source Field

pmIubMacdPduRbsReceivedBits

Source Section

IubDataStreams

pmIubMacdPduRbsReceivedBits_045

Received numbers of Iub Media Access Control-dedicated Power Distribution Unit (MAC-d PDU) bits every second in the range 9000 to 9200 kbps

Data Source

NodeB

Source Field

pmIubMacdPduRbsReceivedBits

Source Section

IubDataStreams

pmIubMacdPduRbsReceivedBits_046

Received numbers of Iub Media Access Control-dedicated Power Distribution Unit (MAC-d PDU) bits every second in the range 9200 to 9400 kbps

Data Source

NodeB

Source Field

pmIubMacdPduRbsReceivedBits

Source Section

IubDataStreams

pmIubMacdPduRbsReceivedBits_047

Received numbers of Iub Media Access Control-dedicated Power Distribution Unit (MAC-d PDU) bits every second in the range 9400 to 9600 kbps

Data Source

NodeB

Source Field

pmIubMacdPduRbsReceivedBits

Source Section

IubDataStreams

pmIubMacdPduRbsReceivedBits_048

Received numbers of Iub Media Access Control-dedicated Power Distribution Unit (MAC-d PDU) bits every second in the range 9600 to 9800 kbps

Data Source

NodeB

Source Field

pmIubMacdPduRbsReceivedBits

Source Section

IubDataStreams

pmIubMacdPduRbsReceivedBits_049

Received numbers of Iub Media Access Control-dedicated Power Distribution Unit (MAC-d PDU) bits every second in the range 9800 to 10000 kbps

Data Source

NodeB

Source Field

pmIubMacdPduRbsReceivedBits

Source Section

IubDataStreams

pmIubMacdPduRbsReceivedBits_050

Received numbers of Iub Media Access Control-dedicated Power Distribution Unit (MAC-d PDU) bits every second in the range 10000 to 10200 kbps

Data Source

NodeB

Source Field

pmIubMacdPduRbsReceivedBits

Source Section

IubDataStreams

pmIubMacdPduRbsReceivedBits_051

Received numbers of Iub Media Access Control-dedicated Power Distribution Unit (MAC-d PDU) bits every second in the range 10200 to 10400 kbps

Data Source

NodeB

Source Field

pmIubMacdPduRbsReceivedBits

Source Section

IubDataStreams

pmIubMacdPduRbsReceivedBits_052

Received numbers of Iub Media Access Control-dedicated Power Distribution Unit (MAC-d PDU) bits every second in the range 10400 to 10600 kbps

Data Source

NodeB

Source Field

pmIubMacdPduRbsReceivedBits

Source Section

IubDataStreams

pmIubMacdPduRbsReceivedBits_053

Received numbers of Iub Media Access Control-dedicated Power Distribution Unit (MAC-d PDU) bits every second in the range 10600 to 10800 kbps

Data Source

NodeB

Source Field

pmIubMacdPduRbsReceivedBits

Source Section

IubDataStreams

pmIubMacdPduRbsReceivedBits_054

Received numbers of Iub Media Access Control-dedicated Power Distribution Unit (MAC-d PDU) bits every second in the range 10800 to 11000 kbps

Data Source

NodeB

Source Field

pmIubMacdPduRbsReceivedBits

Source Section

IubDataStreams

pmIubMacdPduRbsReceivedBits_055

Received numbers of Iub Media Access Control-dedicated Power Distribution Unit (MAC-d PDU) bits every second in the range 11000 to 11200 kbps

Data Source

NodeB

Source Field

pmIubMacdPduRbsReceivedBits

Source Section

IubDataStreams

pmIubMacdPduRbsReceivedBits_056

Received numbers of Iub Media Access Control-dedicated Power Distribution Unit (MAC-d PDU) bits every second in the range 11200 to 11400 kbps

Data Source

NodeB

Source Field

pmIubMacdPduRbsReceivedBits

Source Section

IubDataStreams

pmIubMacdPduRbsReceivedBits_057

Received numbers of Iub Media Access Control-dedicated Power Distribution Unit (MAC-d PDU) bits every second in the range 11400 to 11600 kbps

Data Source

NodeB

Source Field

pmIubMacdPduRbsReceivedBits

Source Section

IubDataStreams

pmIubMacdPduRbsReceivedBits_058

Received numbers of Iub Media Access Control-dedicated Power Distribution Unit (MAC-d PDU) bits every second in the range 11600 to 11800 kbps

Data Source

NodeB

Source Field

pmIubMacdPduRbsReceivedBits

Source Section

IubDataStreams

pmIubMacdPduRbsReceivedBits_059

Received numbers of Iub Media Access Control-dedicated Power Distribution Unit (MAC-d PDU) bits every second in the range 11800 to 12000 kbps

Data Source

NodeB

Source Field

pmIubMacdPduRbsReceivedBits

Source Section

IubDataStreams

pmIubMacdPduRbsReceivedBits_060

Received numbers of Iub Media Access Control-dedicated Power Distribution Unit (MAC-d PDU) bits every second in the range 12000 to 12200 kbps

Data Source

NodeB

Source Field

pmIubMacdPduRbsReceivedBits

Source Section

IubDataStreams

pmIubMacdPduRbsReceivedBits_061

Received numbers of Iub Media Access Control-dedicated Power Distribution Unit (MAC-d PDU) bits every second in the range 12200 to 12400 kbps

Data Source

NodeB

Source Field

pmIubMacdPduRbsReceivedBits

Source Section

IubDataStreams

pmIubMacdPduRbsReceivedBits_062

Received numbers of Iub Media Access Control-dedicated Power Distribution Unit (MAC-d PDU) bits every second in the range 12400 to 12600 kbps

Data Source

NodeB

Source Field

pmIubMacdPduRbsReceivedBits

Source Section

IubDataStreams

pmIubMacdPduRbsReceivedBits_063

Received numbers of Iub Media Access Control-dedicated Power Distribution Unit (MAC-d PDU) bits every second in the range 12600 to 12800 kbps

Data Source

NodeB

Source Field

pmIubMacdPduRbsReceivedBits

Source Section

IubDataStreams

pmIubMacdPduRbsReceivedBits_064

Received numbers of Iub Media Access Control-dedicated Power Distribution Unit (MAC-d PDU) bits every second in the range 12800 to 13000 kbps

Data Source

NodeB

Source Field

pmIubMacdPduRbsReceivedBits

Source Section

IubDataStreams

pmIubMacdPduRbsReceivedBits_065

Received numbers of Iub Media Access Control-dedicated Power Distribution Unit (MAC-d PDU) bits every second in the range 13000 to 13200 kbps

Data Source

NodeB

Source Field

pmIubMacdPduRbsReceivedBits

Source Section

IubDataStreams

pmIubMacdPduRbsReceivedBits_066

Received numbers of Iub Media Access Control-dedicated Power Distribution Unit (MAC-d PDU) bits every second in the range 13200 to 13400 kbps

Data Source

NodeB

Source Field

pmIubMacdPduRbsReceivedBits

Source Section

IubDataStreams

pmIubMacdPduRbsReceivedBits_067

Received numbers of Iub Media Access Control-dedicated Power Distribution Unit (MAC-d PDU) bits every second in the range 13400 to 13600 kbps

Data Source

NodeB

Source Field

pmIubMacdPduRbsReceivedBits

Source Section

IubDataStreams

pmIubMacdPduRbsReceivedBits_068

Received numbers of Iub Media Access Control-dedicated Power Distribution Unit (MAC-d PDU) bits every second in the range 13600 to 13800 kbps

Data Source

NodeB

Source Field

pmIubMacdPduRbsReceivedBits

Source Section

IubDataStreams

pmIubMacdPduRbsReceivedBits_069

Received numbers of Iub Media Access Control-dedicated Power Distribution Unit (MAC-d PDU) bits every second in the range 13800 to 14000 kbps

Data Source

NodeB

Source Field

pmIubMacdPduRbsReceivedBits

Source Section

IubDataStreams

pmIubMacdPduRbsReceivedBits_070

Received numbers of Iub Media Access Control-dedicated Power Distribution Unit (MAC-d PDU) bits every second in the range 14000 to 14200 kbps

Data Source

NodeB

Source Field

pmIubMacdPduRbsReceivedBits

Source Section

IubDataStreams

pmIubMacdPduRbsReceivedBits_071

Received numbers of Iub Media Access Control-dedicated Power Distribution Unit (MAC-d PDU) bits every second in the range 14200 to 14400 kbps

Data Source

NodeB

Source Field

pmIubMacdPduRbsReceivedBits

Source Section

IubDataStreams

pmIubMacdPduRbsReceivedBits_072

Received numbers of Iub Media Access Control-dedicated Power Distribution Unit (MAC-d PDU) bits every second in the range 14400 to 14600 kbps

Data Source

NodeB

Source Field

pmIubMacdPduRbsReceivedBits

Source Section

IubDataStreams

pmIubMacdPduRbsReceivedBits_073

Received numbers of Iub Media Access Control-dedicated Power Distribution Unit (MAC-d PDU) bits every second in the range 14600 to 14800 kbps

Data Source

NodeB

Source Field

pmIubMacdPduRbsReceivedBits

Source Section

IubDataStreams

pmIubMacdPduRbsReceivedBits_074

Received numbers of Iub Media Access Control-dedicated Power Distribution Unit (MAC-d PDU) bits every second in the range 14800 to 15000 kbps

Data Source

NodeB

Source Field

pmIubMacdPduRbsReceivedBits

Source Section

IubDataStreams

pmIubMacdPduRbsReceivedBits_075

Received numbers of Iub Media Access Control-dedicated Power Distribution Unit (MAC-d PDU) bits every second in the range 15000 to 15200 kbps

Data Source

NodeB

Source Field

pmIubMacdPduRbsReceivedBits

Source Section

IubDataStreams

pmIubMacdPduRbsReceivedBits_076

Received numbers of Iub Media Access Control-dedicated Power Distribution Unit (MAC-d PDU) bits every second in the range 15200 to 15400 kbps

Data Source

NodeB

Source Field

pmIubMacdPduRbsReceivedBits

Source Section

IubDataStreams

pmIubMacdPduRbsReceivedBits_077

Received numbers of Iub Media Access Control-dedicated Power Distribution Unit (MAC-d PDU) bits every second in the range 15400 to 15600 kbps

Data Source

NodeB

Source Field

pmIubMacdPduRbsReceivedBits

Source Section

IubDataStreams

pmIubMacdPduRbsReceivedBits_078

Received numbers of Iub Media Access Control-dedicated Power Distribution Unit (MAC-d PDU) bits every second in the range 15600 to 15800 kbps

Data Source

NodeB

Source Field

pmIubMacdPduRbsReceivedBits

Source Section

IubDataStreams

pmIubMacdPduRbsReceivedBits_079

Received numbers of Iub Media Access Control-dedicated Power Distribution Unit (MAC-d PDU) bits every second in the range 15800 to 16000 kbps

Data Source

NodeB

Source Field

pmIubMacdPduRbsReceivedBits

Source Section

IubDataStreams

pmIubMacdPduRbsReceivedBits_080

Received numbers of Iub Media Access Control-dedicated Power Distribution Unit (MAC-d PDU) bits every second in the range 16000 to 16200 kbps

Data Source

NodeB

Source Field

pmIubMacdPduRbsReceivedBits

Source Section

IubDataStreams

pmIubMacdPduRbsReceivedBits_081

Received numbers of Iub Media Access Control-dedicated Power Distribution Unit (MAC-d PDU) bits every second in the range 16200 to 16400 kbps

Data Source

NodeB

Source Field

pmIubMacdPduRbsReceivedBits

Source Section

IubDataStreams

pmIubMacdPduRbsReceivedBits_082

Received numbers of Iub Media Access Control-dedicated Power Distribution Unit (MAC-d PDU) bits every second in the range 16400 to 16600 kbps

Data Source

NodeB

Source Field

pmIubMacdPduRbsReceivedBits

Source Section

IubDataStreams

pmIubMacdPduRbsReceivedBits_083

Received numbers of Iub Media Access Control-dedicated Power Distribution Unit (MAC-d PDU) bits every second in the range 16600 to 16800 kbps

Data Source

NodeB

Source Field

pmIubMacdPduRbsReceivedBits

Source Section

IubDataStreams

pmIubMacdPduRbsReceivedBits_084

Received numbers of Iub Media Access Control-dedicated Power Distribution Unit (MAC-d PDU) bits every second in the range 16800 to 17000 kbps

Data Source

NodeB

Source Field

pmIubMacdPduRbsReceivedBits

Source Section

IubDataStreams

pmIubMacdPduRbsReceivedBits_085

Received numbers of Iub Media Access Control-dedicated Power Distribution Unit (MAC-d PDU) bits every second in the range 17000 to 17200 kbps

Data Source

NodeB

Source Field

pmIubMacdPduRbsReceivedBits

Source Section

IubDataStreams

pmIubMacdPduRbsReceivedBits_086

Received numbers of Iub Media Access Control-dedicated Power Distribution Unit (MAC-d PDU) bits every second in the range 17200 to 17400 kbps

Data Source

NodeB

Source Field

pmIubMacdPduRbsReceivedBits

Source Section

IubDataStreams

pmIubMacdPduRbsReceivedBits_087

Received numbers of Iub Media Access Control-dedicated Power Distribution Unit (MAC-d PDU) bits every second in the range 17400 to 17600 kbps

Data Source

NodeB

Source Field

pmIubMacdPduRbsReceivedBits

Source Section

IubDataStreams

pmIubMacdPduRbsReceivedBits_088

Received numbers of Iub Media Access Control-dedicated Power Distribution Unit (MAC-d PDU) bits every second in the range 17600 to 17800 kbps

Data Source

NodeB

Source Field

pmIubMacdPduRbsReceivedBits

Source Section

IubDataStreams

pmIubMacdPduRbsReceivedBits_089

Received numbers of Iub Media Access Control-dedicated Power Distribution Unit (MAC-d PDU) bits every second in the range 17800 to 18000 kbps

Data Source

NodeB

Source Field

pmIubMacdPduRbsReceivedBits

Source Section

IubDataStreams

pmIubMacdPduRbsReceivedBits_090

Received numbers of Iub Media Access Control-dedicated Power Distribution Unit (MAC-d PDU) bits every second in the range 18000 to 18200 kbps

Data Source

NodeB

Source Field

pmIubMacdPduRbsReceivedBits

Source Section

IubDataStreams

pmIubMacdPduRbsReceivedBits_091

Received numbers of Iub Media Access Control-dedicated Power Distribution Unit (MAC-d PDU) bits every second in the range 18200 to 18400 kbps

Data Source

NodeB

Source Field

pmIubMacdPduRbsReceivedBits

Source Section

IubDataStreams

pmIubMacdPduRbsReceivedBits_092

Received numbers of Iub Media Access Control-dedicated Power Distribution Unit (MAC-d PDU) bits every second in the range 18400 to 18600 kbps

Data Source

NodeB

Source Field

pmIubMacdPduRbsReceivedBits

Source Section

IubDataStreams

pmIubMacdPduRbsReceivedBits_093

Received numbers of Iub Media Access Control-dedicated Power Distribution Unit (MAC-d PDU) bits every second in the range 18600 to 18800 kbps

Data Source

NodeB

Source Field

pmIubMacdPduRbsReceivedBits

Source Section

IubDataStreams

pmIubMacdPduRbsReceivedBits_094

Received numbers of Iub Media Access Control-dedicated Power Distribution Unit (MAC-d PDU) bits every second in the range 18800 to 19000 kbps

Data Source

NodeB

Source Field

pmIubMacdPduRbsReceivedBits

Source Section

IubDataStreams

pmIubMacdPduRbsReceivedBits_095

Received numbers of Iub Media Access Control-dedicated Power Distribution Unit (MAC-d PDU) bits every second in the range 19000 to 19200 kbps

Data Source

NodeB

Source Field

pmIubMacdPduRbsReceivedBits

Source Section

IubDataStreams

pmIubMacdPduRbsReceivedBits_096

Received numbers of Iub Media Access Control-dedicated Power Distribution Unit (MAC-d PDU) bits every second in the range 19200 to 19400 kbps

Data Source

NodeB

Source Field

pmIubMacdPduRbsReceivedBits

Source Section

IubDataStreams

pmIubMacdPduRbsReceivedBits_097

Received numbers of Iub Media Access Control-dedicated Power Distribution Unit (MAC-d PDU) bits every second in the range 19400 to 19600 kbps

Data Source

NodeB

Source Field

pmIubMacdPduRbsReceivedBits

Source Section

IubDataStreams

pmIubMacdPduRbsReceivedBits_098

Received numbers of Iub Media Access Control-dedicated Power Distribution Unit (MAC-d PDU) bits every second in the range 19600 to 19800 kbps

Data Source

NodeB

Source Field

pmIubMacdPduRbsReceivedBits

Source Section

IubDataStreams

pmIubMacdPduRbsReceivedBits_099

Received numbers of Iub Media Access Control-dedicated Power Distribution Unit (MAC-d PDU) bits every second in the range 19800 to 20000 kbps

Data Source

NodeB

Source Field

pmIubMacdPduRbsReceivedBits

Source Section

IubDataStreams

pmIubMacdPduRbsReceivedBits_100

Received numbers of Iub Media Access Control-dedicated Power Distribution Unit (MAC-d PDU) bits every second in the range 20000 and upwards

Data Source

NodeB

Source Field

pmIubMacdPduRbsReceivedBits

Source Section

IubDataStreams

pmNoUlIubLimitEul

PEG Counter for the number of times a scheduling decision is taken to increase the Iub rate of an E-DCH user and there is a need to decrease the Iub rate for another E-DCH user owing to UL Iub resource limitations. Trigger: The counter is stepped when a scheduling decision is taken to increase the Iub rate for an E-DCH user and there is a need to decrease the Iub rate for another E-DCH user owing to UL Iub resource limitations.

Data Source

NodeB

Source Field

pmNoUlIubLimitEul

Source Section

IubDataStreams

pmRbsHsPdschCodePrio

Counter that accumulates the number of code shortage occurrences, that is, number of times priority resolve is entered in the algorithm for dynamic code allocation.

Data Source

NodeB

Source Field

pmRbsHsPdschCodePrio

Source Section

IubDataStreams

pmTargetHsRate_000

Target high-speed rate as percentage of the value of the maxHsRate parameter in the range 0 to 1

Data Source

NodeB

Source Field

pmTargetHsRate

Source Section

IubDataStreams

pmTargetHsRate_001

Target high-speed rate as percentage of the value of the maxHsRate parameter in the range 1 to 2

Data Source

NodeB

Source Field

pmTargetHsRate

Source Section

IubDataStreams

pmTargetHsRate_002

Target high-speed rate as percentage of the value of the maxHsRate parameter in the range 2 to 3

Data Source

NodeB

Source Field

pmTargetHsRate

Source Section

IubDataStreams

pmTargetHsRate_003

Target high-speed rate as percentage of the value of the maxHsRate parameter in the range 3 to 4

Data Source

NodeB

Source Field

pmTargetHsRate

Source Section

IubDataStreams

pmTargetHsRate_004

Target high-speed rate as percentage of the value of the maxHsRate parameter in the range 4 to 5

Data Source

NodeB

Source Field

pmTargetHsRate

Source Section

IubDataStreams

pmTargetHsRate_005

Target high-speed rate as percentage of the value of the maxHsRate parameter in the range 5 to 6

Data Source

NodeB

Source Field

pmTargetHsRate

Source Section

IubDataStreams

pmTargetHsRate_006

Target high-speed rate as percentage of the value of the maxHsRate parameter in the range 6 to 7

Data Source

NodeB

Source Field

pmTargetHsRate

Source Section

IubDataStreams

pmTargetHsRate_007

Target high-speed rate as percentage of the value of the maxHsRate parameter in the range 7 to 8

Data Source

NodeB

Source Field

pmTargetHsRate

Source Section

IubDataStreams

pmTargetHsRate_008

Target high-speed rate as percentage of the value of the maxHsRate parameter in the range 8 to 9

Data Source

NodeB

Source Field

pmTargetHsRate

Source Section

IubDataStreams

pmTargetHsRate_009

Target high-speed rate as percentage of the value of the maxHsRate parameter in the range 9 to 10

Data Source

NodeB

Source Field

pmTargetHsRate

Source Section

IubDataStreams

pmTargetHsRate_010

Target high-speed rate as percentage of the value of the maxHsRate parameter in the range 10 to 11

Data Source

NodeB

Source Field

pmTargetHsRate

Source Section

IubDataStreams

pmTargetHsRate_011

Target high-speed rate as percentage of the value of the maxHsRate parameter in the range 11 to 12

Data Source

NodeB

Source Field

pmTargetHsRate

Source Section

IubDataStreams

pmTargetHsRate_012

Target high-speed rate as percentage of the value of the maxHsRate parameter in the range 12 to 13

Data Source

NodeB

Source Field

pmTargetHsRate

Source Section

IubDataStreams

pmTargetHsRate_013

Target high-speed rate as percentage of the value of the maxHsRate parameter in the range 13 to 14

Data Source

NodeB

Source Field

pmTargetHsRate

Source Section

IubDataStreams

pmTargetHsRate_014

Target high-speed rate as percentage of the value of the maxHsRate parameter in the range 14 to 15

Data Source

NodeB

Source Field

pmTargetHsRate

Source Section

IubDataStreams

pmTargetHsRate_015

Target high-speed rate as percentage of the value of the maxHsRate parameter in the range 15 to 16

Data Source

NodeB

Source Field

pmTargetHsRate

Source Section

IubDataStreams

pmTargetHsRate_016

Target high-speed rate as percentage of the value of the maxHsRate parameter in the range 16 to 17

Data Source

NodeB

Source Field

pmTargetHsRate

Source Section

IubDataStreams

pmTargetHsRate_017

Target high-speed rate as percentage of the value of the maxHsRate parameter in the range 17 to 18

Data Source

NodeB

Source Field

pmTargetHsRate

Source Section

IubDataStreams

pmTargetHsRate_018

Target high-speed rate as percentage of the value of the maxHsRate parameter in the range 18 to 19

Data Source

NodeB

Source Field

pmTargetHsRate

Source Section

IubDataStreams

pmTargetHsRate_019

Target high-speed rate as percentage of the value of the maxHsRate parameter in the range 19 to 20

Data Source

NodeB

Source Field

pmTargetHsRate

Source Section

IubDataStreams

pmTargetHsRate_020

Target high-speed rate as percentage of the value of the maxHsRate parameter in the range 20 to 21

Data Source

NodeB

Source Field

pmTargetHsRate

Source Section

IubDataStreams

pmTargetHsRate_021

Target high-speed rate as percentage of the value of the maxHsRate parameter in the range 21 to 22

Data Source

NodeB

Source Field

pmTargetHsRate

Source Section

IubDataStreams

pmTargetHsRate_022

Target high-speed rate as percentage of the value of the maxHsRate parameter in the range 22 to 23

Data Source

NodeB

Source Field

pmTargetHsRate

Source Section

IubDataStreams

pmTargetHsRate_023

Target high-speed rate as percentage of the value of the maxHsRate parameter in the range 23 to 24

Data Source

NodeB

Source Field

pmTargetHsRate

Source Section

IubDataStreams

pmTargetHsRate_024

Target high-speed rate as percentage of the value of the maxHsRate parameter in the range 24 to 25

Data Source

NodeB

Source Field

pmTargetHsRate

Source Section

IubDataStreams

pmTargetHsRate_025

Target high-speed rate as percentage of the value of the maxHsRate parameter in the range 25 to 26

Data Source

NodeB

Source Field

pmTargetHsRate

Source Section

IubDataStreams

pmTargetHsRate_026

Target high-speed rate as percentage of the value of the maxHsRate parameter in the range 26 to 27

Data Source

NodeB

Source Field

pmTargetHsRate

Source Section

IubDataStreams

pmTargetHsRate_027

Target high-speed rate as percentage of the value of the maxHsRate parameter in the range 27 to 28

Data Source

NodeB

Source Field

pmTargetHsRate

Source Section

IubDataStreams

pmTargetHsRate_028

Target high-speed rate as percentage of the value of the maxHsRate parameter in the range 28 to 29

Data Source

NodeB

Source Field

pmTargetHsRate

Source Section

IubDataStreams

pmTargetHsRate_029

Target high-speed rate as percentage of the value of the maxHsRate parameter in the range 29 to 30

Data Source

NodeB

Source Field

pmTargetHsRate

Source Section

IubDataStreams

pmTargetHsRate_030

Target high-speed rate as percentage of the value of the maxHsRate parameter in the range 30 to 31

Data Source

NodeB

Source Field

pmTargetHsRate

Source Section

IubDataStreams

pmTargetHsRate_031

Target high-speed rate as percentage of the value of the maxHsRate parameter in the range 31 to 32

Data Source

NodeB

Source Field

pmTargetHsRate

Source Section

IubDataStreams

pmTargetHsRate_032

Target high-speed rate as percentage of the value of the maxHsRate parameter in the range 32 to 33

Data Source

NodeB

Source Field

pmTargetHsRate

Source Section

IubDataStreams

pmTargetHsRate_033

Target high-speed rate as percentage of the value of the maxHsRate parameter in the range 33 to 34

Data Source

NodeB

Source Field

pmTargetHsRate

Source Section

IubDataStreams

pmTargetHsRate_034

Target high-speed rate as percentage of the value of the maxHsRate parameter in the range 34 to 35

Data Source

NodeB

Source Field

pmTargetHsRate

Source Section

IubDataStreams

pmTargetHsRate_035

Target high-speed rate as percentage of the value of the maxHsRate parameter in the range 35 to 36

Data Source

NodeB

Source Field

pmTargetHsRate

Source Section

IubDataStreams

pmTargetHsRate_036

Target high-speed rate as percentage of the value of the maxHsRate parameter in the range 36 to 37

Data Source

NodeB

Source Field

pmTargetHsRate

Source Section

IubDataStreams

pmTargetHsRate_037

Target high-speed rate as percentage of the value of the maxHsRate parameter in the range 37 to 38

Data Source

NodeB

Source Field

pmTargetHsRate

Source Section

IubDataStreams

pmTargetHsRate_038

Target high-speed rate as percentage of the value of the maxHsRate parameter in the range 38 to 39

Data Source

NodeB

Source Field

pmTargetHsRate

Source Section

IubDataStreams

pmTargetHsRate_039

Target high-speed rate as percentage of the value of the maxHsRate parameter in the range 39 to 40

Data Source

NodeB

Source Field

pmTargetHsRate

Source Section

IubDataStreams

pmTargetHsRate_040

Target high-speed rate as percentage of the value of the maxHsRate parameter in the range 40 to 41

Data Source

NodeB

Source Field

pmTargetHsRate

Source Section

IubDataStreams

pmTargetHsRate_041

Target high-speed rate as percentage of the value of the maxHsRate parameter in the range 41 to 42

Data Source

NodeB

Source Field

pmTargetHsRate

Source Section

IubDataStreams

pmTargetHsRate_042

Target high-speed rate as percentage of the value of the maxHsRate parameter in the range 42 to 43

Data Source

NodeB

Source Field

pmTargetHsRate

Source Section

IubDataStreams

pmTargetHsRate_043

Target high-speed rate as percentage of the value of the maxHsRate parameter in the range 43 to 44

Data Source

NodeB

Source Field

pmTargetHsRate

Source Section

IubDataStreams

pmTargetHsRate_044

Target high-speed rate as percentage of the value of the maxHsRate parameter in the range 44 to 45

Data Source

NodeB

Source Field

pmTargetHsRate

Source Section

IubDataStreams

pmTargetHsRate_045

Target high-speed rate as percentage of the value of the maxHsRate parameter in the range 45 to 46

Data Source

NodeB

Source Field

pmTargetHsRate

Source Section

IubDataStreams

pmTargetHsRate_046

Target high-speed rate as percentage of the value of the maxHsRate parameter in the range 46 to 47

Data Source

NodeB

Source Field

pmTargetHsRate

Source Section

IubDataStreams

pmTargetHsRate_047

Target high-speed rate as percentage of the value of the maxHsRate parameter in the range 47 to 48

Data Source

NodeB

Source Field

pmTargetHsRate

Source Section

IubDataStreams

pmTargetHsRate_048

Target high-speed rate as percentage of the value of the maxHsRate parameter in the range 48 to 49

Data Source

NodeB

Source Field

pmTargetHsRate

Source Section

IubDataStreams

pmTargetHsRate_049

Target high-speed rate as percentage of the value of the maxHsRate parameter in the range 49 to 50

Data Source

NodeB

Source Field

pmTargetHsRate

Source Section

IubDataStreams

pmTargetHsRate_050

Target high-speed rate as percentage of the value of the maxHsRate parameter in the range 50 to 51

Data Source

NodeB

Source Field

pmTargetHsRate

Source Section

IubDataStreams

pmTargetHsRate_051

Target high-speed rate as percentage of the value of the maxHsRate parameter in the range 51 to 52

Data Source

NodeB

Source Field

pmTargetHsRate

Source Section

IubDataStreams

pmTargetHsRate_052

Target high-speed rate as percentage of the value of the maxHsRate parameter in the range 52 to 53

Data Source

NodeB

Source Field

pmTargetHsRate

Source Section

IubDataStreams

pmTargetHsRate_053

Target high-speed rate as percentage of the value of the maxHsRate parameter in the range 53 to 54

Data Source

NodeB

Source Field

pmTargetHsRate

Source Section

IubDataStreams

pmTargetHsRate_054

Target high-speed rate as percentage of the value of the maxHsRate parameter in the range 54 to 55

Data Source

NodeB

Source Field

pmTargetHsRate

Source Section

IubDataStreams

pmTargetHsRate_055

Target high-speed rate as percentage of the value of the maxHsRate parameter in the range 55 to 56

Data Source

NodeB

Source Field

pmTargetHsRate

Source Section

IubDataStreams

pmTargetHsRate_056

Target high-speed rate as percentage of the value of the maxHsRate parameter in the range 56 to 57

Data Source

NodeB

Source Field

pmTargetHsRate

Source Section

IubDataStreams

pmTargetHsRate_057

Target high-speed rate as percentage of the value of the maxHsRate parameter in the range 57 to 58

Data Source

NodeB

Source Field

pmTargetHsRate

Source Section

IubDataStreams

pmTargetHsRate_058

Target high-speed rate as percentage of the value of the maxHsRate parameter in the range 58 to 59

Data Source

NodeB

Source Field

pmTargetHsRate

Source Section

IubDataStreams

pmTargetHsRate_059

Target high-speed rate as percentage of the value of the maxHsRate parameter in the range 59 to 60

Data Source

NodeB

Source Field

pmTargetHsRate

Source Section

IubDataStreams

pmTargetHsRate_060

Target high-speed rate as percentage of the value of the maxHsRate parameter in the range 60 to 61

Data Source

NodeB

Source Field

pmTargetHsRate

Source Section

IubDataStreams

pmTargetHsRate_061

Target high-speed rate as percentage of the value of the maxHsRate parameter in the range 61 to 62

Data Source

NodeB

Source Field

pmTargetHsRate

Source Section

IubDataStreams

pmTargetHsRate_062

Target high-speed rate as percentage of the value of the maxHsRate parameter in the range 62 to 63

Data Source

NodeB

Source Field

pmTargetHsRate

Source Section

IubDataStreams

pmTargetHsRate_063

Target high-speed rate as percentage of the value of the maxHsRate parameter in the range 63 to 64

Data Source

NodeB

Source Field

pmTargetHsRate

Source Section

IubDataStreams

pmTargetHsRate_064

Target high-speed rate as percentage of the value of the maxHsRate parameter in the range 64 to 65

Data Source

NodeB

Source Field

pmTargetHsRate

Source Section

IubDataStreams

pmTargetHsRate_065

Target high-speed rate as percentage of the value of the maxHsRate parameter in the range 65 to 66

Data Source

NodeB

Source Field

pmTargetHsRate

Source Section

IubDataStreams

pmTargetHsRate_066

Target high-speed rate as percentage of the value of the maxHsRate parameter in the range 66 to 67

Data Source

NodeB

Source Field

pmTargetHsRate

Source Section

IubDataStreams

pmTargetHsRate_067

Target high-speed rate as percentage of the value of the maxHsRate parameter in the range 67 to 68

Data Source

NodeB

Source Field

pmTargetHsRate

Source Section

IubDataStreams

pmTargetHsRate_068

Target high-speed rate as percentage of the value of the maxHsRate parameter in the range 68 to 69

Data Source

NodeB

Source Field

pmTargetHsRate

Source Section

IubDataStreams

pmTargetHsRate_069

Target high-speed rate as percentage of the value of the maxHsRate parameter in the range 69 to 70

Data Source

NodeB

Source Field

pmTargetHsRate

Source Section

IubDataStreams

pmTargetHsRate_070

Target high-speed rate as percentage of the value of the maxHsRate parameter in the range 70 to 71

Data Source

NodeB

Source Field

pmTargetHsRate

Source Section

IubDataStreams

pmTargetHsRate_071

Target high-speed rate as percentage of the value of the maxHsRate parameter in the range 71 to 72

Data Source

NodeB

Source Field

pmTargetHsRate

Source Section

IubDataStreams

pmTargetHsRate_072

Target high-speed rate as percentage of the value of the maxHsRate parameter in the range 72 to 73

Data Source

NodeB

Source Field

pmTargetHsRate

Source Section

IubDataStreams

pmTargetHsRate_073

Target high-speed rate as percentage of the value of the maxHsRate parameter in the range 73 to 74

Data Source

NodeB

Source Field

pmTargetHsRate

Source Section

IubDataStreams

pmTargetHsRate_074

Target high-speed rate as percentage of the value of the maxHsRate parameter in the range 74 to 75

Data Source

NodeB

Source Field

pmTargetHsRate

Source Section

IubDataStreams

pmTargetHsRate_075

Target high-speed rate as percentage of the value of the maxHsRate parameter in the range 75 to 76

Data Source

NodeB

Source Field

pmTargetHsRate

Source Section

IubDataStreams

pmTargetHsRate_076

Target high-speed rate as percentage of the value of the maxHsRate parameter in the range 76 to 77

Data Source

NodeB

Source Field

pmTargetHsRate

Source Section

IubDataStreams

pmTargetHsRate_077

Target high-speed rate as percentage of the value of the maxHsRate parameter in the range 77 to 78

Data Source

NodeB

Source Field

pmTargetHsRate

Source Section

IubDataStreams

pmTargetHsRate_078

Target high-speed rate as percentage of the value of the maxHsRate parameter in the range 78 to 79

Data Source

NodeB

Source Field

pmTargetHsRate

Source Section

IubDataStreams

pmTargetHsRate_079

Target high-speed rate as percentage of the value of the maxHsRate parameter in the range 79 to 80

Data Source

NodeB

Source Field

pmTargetHsRate

Source Section

IubDataStreams

pmTargetHsRate_080

Target high-speed rate as percentage of the value of the maxHsRate parameter in the range 80 to 81

Data Source

NodeB

Source Field

pmTargetHsRate

Source Section

IubDataStreams

pmTargetHsRate_081

Target high-speed rate as percentage of the value of the maxHsRate parameter in the range 81 to 82

Data Source

NodeB

Source Field

pmTargetHsRate

Source Section

IubDataStreams

pmTargetHsRate_082

Target high-speed rate as percentage of the value of the maxHsRate parameter in the range 82 to 83

Data Source

NodeB

Source Field

pmTargetHsRate

Source Section

IubDataStreams

pmTargetHsRate_083

Target high-speed rate as percentage of the value of the maxHsRate parameter in the range 83 to 84

Data Source

NodeB

Source Field

pmTargetHsRate

Source Section

IubDataStreams

pmTargetHsRate_084

Target high-speed rate as percentage of the value of the maxHsRate parameter in the range 84 to 85

Data Source

NodeB

Source Field

pmTargetHsRate

Source Section

IubDataStreams

pmTargetHsRate_085

Target high-speed rate as percentage of the value of the maxHsRate parameter in the range 85 to 86

Data Source

NodeB

Source Field

pmTargetHsRate

Source Section

IubDataStreams

pmTargetHsRate_086

Target high-speed rate as percentage of the value of the maxHsRate parameter in the range 86 to 87

Data Source

NodeB

Source Field

pmTargetHsRate

Source Section

IubDataStreams

pmTargetHsRate_087

Target high-speed rate as percentage of the value of the maxHsRate parameter in the range 87 to 88

Data Source

NodeB

Source Field

pmTargetHsRate

Source Section

IubDataStreams

pmTargetHsRate_088

Target high-speed rate as percentage of the value of the maxHsRate parameter in the range 88 to 89

Data Source

NodeB

Source Field

pmTargetHsRate

Source Section

IubDataStreams

pmTargetHsRate_089

Target high-speed rate as percentage of the value of the maxHsRate parameter in the range 89 to 90

Data Source

NodeB

Source Field

pmTargetHsRate

Source Section

IubDataStreams

pmTargetHsRate_090

Target high-speed rate as percentage of the value of the maxHsRate parameter in the range 90 to 91

Data Source

NodeB

Source Field

pmTargetHsRate

Source Section

IubDataStreams

pmTargetHsRate_091

Target high-speed rate as percentage of the value of the maxHsRate parameter in the range 91 to 92

Data Source

NodeB

Source Field

pmTargetHsRate

Source Section

IubDataStreams

pmTargetHsRate_092

Target high-speed rate as percentage of the value of the maxHsRate parameter in the range 92 to 93

Data Source

NodeB

Source Field

pmTargetHsRate

Source Section

IubDataStreams

pmTargetHsRate_093

Target high-speed rate as percentage of the value of the maxHsRate parameter in the range 93 to 94

Data Source

NodeB

Source Field

pmTargetHsRate

Source Section

IubDataStreams

pmTargetHsRate_094

Target high-speed rate as percentage of the value of the maxHsRate parameter in the range 94 to 95

Data Source

NodeB

Source Field

pmTargetHsRate

Source Section

IubDataStreams

pmTargetHsRate_095

Target high-speed rate as percentage of the value of the maxHsRate parameter in the range 95 to 96

Data Source

NodeB

Source Field

pmTargetHsRate

Source Section

IubDataStreams

pmTargetHsRate_096

Target high-speed rate as percentage of the value of the maxHsRate parameter in the range 96 to 97

Data Source

NodeB

Source Field

pmTargetHsRate

Source Section

IubDataStreams

pmTargetHsRate_097

Target high-speed rate as percentage of the value of the maxHsRate parameter in the range 97 to 98

Data Source

NodeB

Source Field

pmTargetHsRate

Source Section

IubDataStreams

pmTargetHsRate_098

Target high-speed rate as percentage of the value of the maxHsRate parameter in the range 98 to 99

Data Source

NodeB

Source Field

pmTargetHsRate

Source Section

IubDataStreams

pmTargetHsRate_099

Target high-speed rate as percentage of the value of the maxHsRate parameter in the range 99 to 100

Data Source

NodeB

Source Field

pmTargetHsRate

Source Section

IubDataStreams

pmTargetHsRate_100

Target high-speed rate as percentage of the value of the maxHsRate parameter more than 100

Data Source

NodeB

Source Field

pmTargetHsRate

Source Section

IubDataStreams

IubEdch Primitive Calculations

The following is a list of primitive calculations for the IubEdch entity.

GRAPHmultiLineSeparator

Special Control Field for Multi-Line Graphs

Calculation

```
""
```

NUMDAYS

of days in Report

Calculation

```
DAYSINREPORT()
```

NUMHOURS

of hours in Summation Data

IubEdch Peg Counts

The following is a list of peg counts for the IubEdch entity.

PERLENSEC

Period length in seconds

Data Source

RNC

Source Field

gp

Source Section

IubEdch

PERLENSEC_K

Period length in seconds aggregation summation in time domain and aggregation maximum between Network Elements.

Data Source

RNC

Source Field

gp

Source Section

IubEdch

pmEdchDataFrameDelayIub_00

Enhanced Uplink Iub dynamic delay measurement results. Stores the number of times that the measured delay matches the interval, defined in ms: 0 <= x < 10

Data Source

RNC

Source Field

pmEdchDataFrameDelayIub

Source Section

IubEdch

pmEdchDataFrameDelayIub_01

Enhanced Uplink Iub dynamic delay measurement results. Stores the number of times that the measured delay matches the interval, defined in ms: 10 <= x < 20

Data Source

RNC

Source Field

pmEdchDataFrameDelayIub

Source Section

IubEdch

pmEdchDataFrameDelayIub_02

Enhanced Uplink Iub dynamic delay measurement results. Stores the number of times that the measured delay matches the interval, defined in ms: 20 <= x < 30

Data Source

RNC

Source Field

pmEdchDataFrameDelayIub

Source Section

IubEdch

pmEdchDataFrameDelayIub_03

Enhanced Uplink Iub dynamic delay measurement results. Stores the number of times that the measured delay matches the interval, defined in ms: 30 <= x < 40

Data Source

RNC

Source Field

pmEdchDataFrameDelayIub

Source Section

IubEdch

pmEdchDataFrameDelayIub_04

Enhanced Uplink Iub dynamic delay measurement results. Stores the number of times that the measured delay matches the interval, defined in ms: 40 <= x < 50

Data Source

RNC

Source Field

pmEdchDataFrameDelayIub

Source Section

IubEdch

pmEdchDataFrameDelayIub_05

Enhanced Uplink Iub dynamic delay measurement results. Stores the number of times that the measured delay matches the interval, defined in ms: 50 <= x < 60

Data Source

RNC

Source Field

pmEdchDataFrameDelayIub

Source Section

IubEdch

pmEdchDataFrameDelayIub_06

Enhanced Uplink Iub dynamic delay measurement results. Stores the number of times that the measured delay matches the interval, defined in ms: 60 <= x < 70

Data Source

RNC

Source Field

pmEdchDataFrameDelayIub

Source Section

IubEdch

pmEdchDataFrameDelayIub_07

Enhanced Uplink Iub dynamic delay measurement results. Stores the number of times that the measured delay matches the interval, defined in ms: 70 <= x < 80

Data Source

RNC

Source Field

pmEdchDataFrameDelayIub

Source Section

IubEdch

pmEdchDataFrameDelayIub_08

Enhanced Uplink Iub dynamic delay measurement results. Stores the number of times that the measured delay matches the interval, defined in ms: 80 <= x < 90

Data Source

RNC

Source Field

pmEdchDataFrameDelayIub

Source Section

IubEdch

pmEdchDataFrameDelayIub_09

Enhanced Uplink Iub dynamic delay measurement results. Stores the number of times that the measured delay matches the interval, defined in ms: 90 <= x < 100

Data Source

RNC

Source Field

pmEdchDataFrameDelayIub

Source Section

IubEdch

pmEdchDataFrameDelayIub_10

Enhanced Uplink Iub dynamic delay measurement results. Stores the number of times that the measured delay matches the interval, defined in ms: 100 <= x < 110

Data Source

RNC

Source Field

pmEdchDataFrameDelayIub

Source Section

IubEdch

pmEdchDataFrameDelayIub_11

Enhanced Uplink Iub dynamic delay measurement results. Stores the number of times that the measured delay matches the interval, defined in ms: 110 <= x < 120

Data Source

RNC

Source Field

pmEdchDataFrameDelayIub

Source Section

IubEdch

pmEdchDataFrameDelayIub_12

Enhanced Uplink Iub dynamic delay measurement results. Stores the number of times that the measured delay matches the interval, defined in ms: 120 <= x < 130

Data Source

RNC

Source Field

pmEdchDataFrameDelayIub

Source Section

IubEdch

pmEdchDataFrameDelayIub_13

Enhanced Uplink Iub dynamic delay measurement results. Stores the number of times that the measured delay matches the interval, defined in ms: 130 <= x < 140

Data Source

RNC

Source Field

pmEdchDataFrameDelayIub

Source Section

IubEdch

pmEdchDataFrameDelayIub_14

Enhanced Uplink Iub dynamic delay measurement results. Stores the number of times that the measured delay matches the interval, defined in ms: 140 <= x < 150

Data Source

RNC

Source Field

pmEdchDataFrameDelayIub

Source Section

IubEdch

pmEdchDataFrameDelayIub_15

Enhanced Uplink Iub dynamic delay measurement results. Stores the number of times that the measured delay matches the interval, defined in ms: x >= 150

Data Source

RNC

Source Field

pmEdchDataFrameDelayIub

Source Section

IubEdch

pmEdchDataFramesLost

Number of lost E-DCH data frames.

Data Source

RNC

Source Field

pmEdchDataFramesLost

Source Section

IubEdch

pmEdchDataFramesReceived

Number of correctly received E-DCH data frames.

Data Source

RNC

Source Field

pmEdchDataFramesReceived

Source Section

IubEdch

IubLink Primitive Calculations

The following is a list of primitive calculations for the IubLink entity.

GRAPHmultiLineSeparator

Special Control Field for Multi-Line Graphs

Calculation

```
""
```

NUMDAYS

of days in Report

Calculation

```
DAYSINREPORT()
```

NUMHOURS

of hours in Summation Data

Calculation

IubLink Peg Counts

The following is a list of peg counts for the IubLink entity.

availabilityStatus

The availability status of the Iub. { long, Range = 0..2047, Default=0, ReadOnly, NonPersistent, }

Data Source

Bulk CM

Source Section

IubLink

beMarginDlHw

Relative admission limit on RBS DL HW resource utilisation applicable to non-handover non-guaranteed admission requests. In the parameter name ?be? stands for ?best effort?. { long, Range = 0..100, Default=10 }

Data Source

Bulk CM

Source Section

IubLink

beMarginUlHw

Relative admission limit on RBS UL HW resource utilisation applicable to non-handover non-guaranteed admission requests. In the parameter name ?be? stands for ?best effort?. { long, Range = 0..100, Default=10 }

Data Source

Bulk CM

Source Section

IubLink

dlHwAdm

Admission limit on RBS DL HW resource utilisation applicable to non-handover guaranteed admission requests. This parameter is also used together with beMarginDlHw for non-handover non-guaranteed admission requests. { long, Range = 0..100, Default=70 }

Data Source

Bulk CM

Source Section

IubLink

iubLinkNodeBFunction

The value of this attribute shall be the FDN of the related NodeBFunction instance.

Data Source

Bulk CM

Source Field

un:iubLinkNodeBFunction

Source Section

IubLink

iubLinkUtranCell

The value of this attribute shall be a list of the FDN(s) of the related UtranCell instance(s).

Data Source

Bulk CM

Source Field

un:iubLinkUtranCell

Source Section

IubLink

operationalState

The operational state of Iub. { string, Default= ENABLED, ReadOnly, NonPersistent, }

Data Source

Bulk CM

Source Section

IubLink

pmDchFramesOutOfSequenceUl

The number of Iur DCH Frame Protocol frames received out-of-sequence in the uplink direction in SRNC.

Data Source

RNC

Source Field

pmDchFramesOutOfSequenceUl

Source Section

IubLink

pmDlCredits_00

The total consumed RBS DL credits, as a percentage.

Data Source

RNC

Source Field

pmDlCredits

Source Section

IubLink

pmDlCredits_01

The total consumed RBS DL credits, as a percentage.

Data Source

RNC

Source Field

pmDlCredits

Source Section

IubLink

pmDlCredits_02

The total consumed RBS DL credits, as a percentage.

Data Source

RNC

Source Field

pmDlCredits

Source Section

IubLink

pmDlCredits_03

The total consumed RBS DL credits, as a percentage.

Data Source

RNC

Source Field

pmDlCredits

Source Section

IubLink

pmDlCredits_04

The total consumed RBS DL credits, as a percentage.

Data Source

RNC

Source Field

pmDlCredits

Source Section

IubLink

pmDlCredits_05

The total consumed RBS DL credits, as a percentage.

Data Source

RNC

Source Field

pmDlCredits

Source Section

IubLink

pmDlCredits_06

The total consumed RBS DL credits, as a percentage.

Data Source

RNC

Source Field

pmDlCredits

Source Section

IubLink

pmDlCredits_07

The total consumed RBS DL credits, as a percentage.

Data Source

RNC

Source Field

pmDlCredits

Source Section

IubLink

pmDlCredits_08

The total consumed RBS DL credits, as a percentage.

Data Source

RNC

Source Field

pmDlCredits

Source Section

IubLink

pmDlCredits_09

The total consumed RBS DL credits, as a percentage.

Data Source

RNC

Source Field

pmDlCredits

Source Section

IubLink

pmHsSevereCong

This counter counts the number of severe congestion occurrences detected by the "CAPACITY ALLOCATION Presence Supervision" function in RNC. This is done per Iub/Iur interface. A CAPACITY ALLOCATION control frame is expected at least every one second from RBS per flow controlled HS flow. If a CA has not been received for a longer period of time, an HS Severe Congestion is detected. These interface counters shall normally be zero.

Data Source

RNC

Source Field

pmHsSevereCong

Source Section

IubLink

pmIubLinkDynamicDelayMax

Maximum dynamic delay in milliseconds between the RNC and the RBS on the radio network layer.

Data Source

RNC

Source Field

pmIubLinkDynamicDelayMax

Source Section

NodeSynch

pmIubLinkStaticDelay

Monitor the lowest one-way delay in milliseconds between the RNC and RBS on the radio network layer.

Data Source

RNC

Source Field

pmIubLinkStaticDelay

Source Section

NodeSynch

pmNoMtchTimingAdjContrFrames

Number of received downlink timing adjustment control frames for MTCH FACH is counted to provide observability for RBSes where synchronization for MBMS can not be provided. A counter value of 0 means that no frames arrive too late or too early. A moderate counter value (1-approximately 200) indicates frames occasionally arrive too late or too early. This indicates problems with high delay variation in the transport network. A modification of the iubTransportDelayOffset (DTO) value for MTCH frame synchronization may be required. A very high value (close to 900) probably points at a problem with network synchronization.

Data Source

RNC

Source Field

pmNoMtchTimingAdjContrFrames

Source Section

IubLink

pmNoOfDiscardedNbapcMessages

Number of NBAP Common messages rejected by Admission Control due to L2 signaling bearer congestion.

Data Source

RNC

Source Field

pmNoOfDiscardedNbapcMessages

Source Section

IubLink

pmSamplesDlCredits

Number of samples in pmSumDlCredits (that is, pmSamplesDlCredits = pmSamplesDlCredits +1, whenever pmSumDlCredits is to be updated).

Data Source

RNC

Source Field

pmSamplesDlCredits

Source Section

IubLink

pmSamplesUlCredits

Number of samples in pmSumUlCredits (that is, pmSamplesUlCredits = pmSamplesUlCredits +1, whenever pmSumUlCredits is to be updated).

Data Source

RNC

Source Field

pmSamplesUlCredits

Source Section

IubLink

pmSumDlCredits

Aggregate of total consumed RBS DL credit measurements (in credits).

Data Source

RNC

Source Field

pmSumDlCredits

Source Section

IubLink

pmSumSqrDlCredits

Aggregate of the squares of the individual measurements in pmSumDlCredits (that is, pmSumSqrDlCredits = pmSumSqrDlCredits + measurement_value^2).

Data Source

RNC

Source Field

pmSumSqrDlCredits

Source Section

IubLink

pmSumSqrUlCredits

Aggregate of the squares of the individual measurements in pmSumUlCredits (that is, pmSumSqrUlCredits = pmSumSqrUlCredits + measurement_value^2).

Data Source

RNC

Source Field

pmSumSqrUlCredits

Source Section

IubLink

pmSumUlCredits

Aggregate of total consumed RBS UL credit measurements (in credits).

Data Source

RNC

Source Field

pmSumUlCredits

Source Section

IubLink

pmTotalTimeIubLinkCongestedDl

The time in seconds that the Iublink is congested on the NBAP Common part of the control plane.

Data Source

RNC

Source Field

pmTotalTimeIubLinkCongestedDl

Source Section

IubLink

pmTotalTimeIubLinkUnavail

The time in seconds that the Iub link is unavailable for the NBAP Common part of the control plane, due to network or node internal problems.

Data Source

RNC

Source Field

pmTotalTimeIubLinkUnavail

Source Section

IubLink

pmUlCredits_00

The total consumed RBS UL credits, as a percentage.

Data Source

RNC

Source Field

pmUlCredits

Source Section

IubLink

pmUlCredits_01

The total consumed RBS UL credits, as a percentage.

Data Source

RNC

Source Field

pmUlCredits

Source Section

IubLink

pmUlCredits_02

The total consumed RBS UL credits, as a percentage.

Data Source

RNC

Source Field

pmUlCredits

Source Section

IubLink

pmUlCredits_03

The total consumed RBS UL credits, as a percentage.

Data Source

RNC

Source Field

pmUlCredits

Source Section

IubLink

pmUlCredits_04

The total consumed RBS UL credits, as a percentage.

Data Source

RNC

Source Field

pmUlCredits

Source Section

IubLink

pmUlCredits_05

The total consumed RBS UL credits, as a percentage.

Data Source

RNC

Source Field

pmUlCredits

Source Section

IubLink

pmUlCredits_06

The total consumed RBS UL credits, as a percentage.

Data Source

RNC

Source Field

pmUlCredits

Source Section

IubLink

pmUlCredits_07

The total consumed RBS UL credits, as a percentage.

Data Source

RNC

Source Field

pmUlCredits

Source Section

IubLink

pmUlCredits_08

The total consumed RBS UL credits, as a percentage.

Data Source

RNC

Source Field

pmUlCredits

Source Section

IubLink

pmUlCredits_09

The total consumed RBS UL credits, as a percentage.

Data Source

RNC

Source Field

pmUlCredits

Source Section

IubLink

rbsId

Iub Connection identity. The value is not used by the RNC. It is used in OSS-RC for correlation between RNC and RBS. { long, Range = 0.., Default=Mandatory NoNotification}

Data Source

Bulk CM

Source Section

IubLink

reservedBy

Sequence of UtranCell MO references. Indicates all of the UTRAN cells that are associated with the RBS represented by this IubLink. { sequence<UtranCell,6>, Default = empty, Default=, ReadOnly, }

Data Source

Bulk CM

Source Section

IubLink

rncModuleRef

Reference to the RncModule MO that it belongs to.

Data Source

Bulk CM

Source Field

es:rncModuleRef

Source Section

IubLink

tpcPattern01CountDl

System constant. { long, Default=8 }

Data Source

Bulk CM

Source Section

IubLink

ulHwAdm

Admission limit on RBS UL HW resource utilisation applicable to non-handover guaranteed admission requests. { long, Range = 0..100, Default=70 }

Data Source

Bulk CM

Source Section

IubLink

userLabel

Provides the possibility to put a user-friendly label on the MO instance. The value is not used by the RNC. { string, LengthRange = 0..128, Default= "" }

Data Source

Bulk CM

Source Section

IubLink

IuLink Primitive Calculations

The following is a list of primitive calculations for the IuLink entity.

GRAPHmultiLineSeparator

Special Control Field for Multi-Line Graphs

Calculation

""

NUMDAYS

of days in Report

Calculation

```
DAYSINREPORT()
```

NUMHOURS

of hours in Summation Data

IuLink Peg Counts

The following is a list of peg counts for the IuLink entity.

PERLENSEC

Period Length

Data Source

RNC

Source Field

PERLENSEC

Source Section

Sccpch_WMGeneral

PERLENSEC_K

Period length in seconds aggregation summation in time domain and aggregation maximum between Network Elements.

Data Source

RNC

Source Field

PERLENSEC

Source Section

Sccpch_WMGeneral

pmInFrames

Number of FP frames received over the Iucs link. The counter is stepped for each frame protocol frame that is received per Iucs link. This counter is stepped regardless of whether the underlying transport network is IP or underlying transport network is IP or ATM.

Data Source

RNC

Source Field

pmInFrames

Source Section

IuLink

pmInLostFrames

Number of FP frames lost over the Iucs link in the received direction. The counter is stepped for each frame protocol frame that is lost in the received direction per Iucs link, when the Iucs is over IP.

Data Source

RNC

Source Field

pmInLostFrames

Source Section

IuLink

pmInOutOfSequenceFrames

Number of out-of-sequence FP frames received per Iucs link. The counter is stepped for each out-of-sequence frame protocol frame that is received per Iucs link. This counter is stepped only when the underlying transport network is IP. A frame is considered to be out-of-sequence when frame_n (or less) arrives after frame_n+1.

Data Source

RNC

Source Field

pmInOutOfSequenceFrames

Source Section

IuLink

pmOutFrames

Number of FP frames sent over the Iucs link. The counter is stepped for each frame protocol frame that is sent per Iucs link. This counter is stepped regardless of whether the underlying transport network is IP or ATM.

Data Source

RNC

Source Field

pmOutFrames

Source Section

IuLink

IurLink Primitive Calculations

The following is a list of primitive calculations for the IurLink entity.

GRAPHmultiLineSeparator

Special Control Field for Multi-Line Graphs

Calculation

```
""
```

LocalName

LubLink Name

Calculation

```
LocalKey
```

NUMDAYS

of days in Report

Calculation

```
DAYSINREPORT()
```

NUMHOURS

of hours in Summation Data

Calculation

IurLink Peg Counts

The following is a list of peg counts for the IurLink entity.

aliasPlmnIdentities

List of alias PLMN identities to the target PLMN id of the External RNC represented by this Iurlink object. { sequence<PlmnIdentity,30>, Default = empty, Default= }

Data Source

Bulk CM

Source Section

IurLink

mcc

The MCC part of the PLMN identity used in the radio network. { long, Range = 0..999, Default=Mandatory }

Data Source

Bulk CM

Source Section

IurLink

mnc

The MNC part of the PLMN identity used in the radio network. { long, Range = 0..999, Default=Mandatory }

Data Source

Bulk CM

Source Section

IurLink

mncLength

The length of the MNC part of the PLMN identity used in the Gsm radio network. { long, Range = 2..3, Default=Mandatory }

Data Source

Bulk CM

Source Section

IurLink

PERLENSEC

Period Length

Data Source

NodeB_RNC_RXI

Source Field

PERLENSEC

Source Section

IurLink_WMGeneral

PERLENSEC_K

Period length in seconds aggregation summation in time domain and aggregation maximum between Network Elements.

Data Source

NodeB_RNC

Source Field

PERLENSEC

Source Section

IurLink_WMGeneral

pmDchFramesOutOfSequenceUl

The number of Iur DCH Frame Protocol frames received out-of-sequence in the uplink direction in SRNC.

Data Source

RNC

Source Field

pmDchFramesOutOfSequenceUl

Source Section

IurLink

pmEdchDataFrameDelayIub_00

Enhanced Uplink Iub dynamic delay measurement results. Stores the number of times that the measured delay matches the intervals below, defined in ms. The counter bridges both Iur and Iub and therefore reflects the delay across both.

Data Source

RNC

Source Field

pmEdchDataFrameDelayIub

Source Section

IurLink

pmEdchDataFrameDelayIub_01

Enhanced Uplink Iub dynamic delay measurement results. Stores the number of times that the measured delay matches the intervals below, defined in ms. The counter bridges both Iur and Iub and therefore reflects the delay across both.

Data Source

RNC

Source Field

pmEdchDataFrameDelayIub

Source Section

IurLink

pmEdchDataFrameDelayIub_02

Enhanced Uplink Iub dynamic delay measurement results. Stores the number of times that the measured delay matches the intervals below, defined in ms. The counter bridges both Iur and Iub and therefore reflects the delay across both.

Data Source

RNC

Source Field

pmEdchDataFrameDelayIub

Source Section

IurLink

pmEdchDataFrameDelayIub_03

Enhanced Uplink Iub dynamic delay measurement results. Stores the number of times that the measured delay matches the intervals below, defined in ms. The counter bridges both Iur and Iub and therefore reflects the delay across both.

Data Source

RNC

Source Field

pmEdchDataFrameDelayIub

Source Section

IurLink

pmEdchDataFrameDelayIub_04

Enhanced Uplink Iub dynamic delay measurement results. Stores the number of times that the measured delay matches the intervals below, defined in ms. The counter bridges both Iur and Iub and therefore reflects the delay across both.

Data Source

RNC

Source Field

pmEdchDataFrameDelayIub

Source Section

IurLink

pmEdchDataFrameDelayIub_05

Enhanced Uplink Iub dynamic delay measurement results. Stores the number of times that the measured delay matches the intervals below, defined in ms. The counter bridges both Iur and Iub and therefore reflects the delay across both.

Data Source

RNC

Source Field

pmEdchDataFrameDelayIub

Source Section

IurLink

pmEdchDataFrameDelayIub_06

Enhanced Uplink Iub dynamic delay measurement results. Stores the number of times that the measured delay matches the intervals below, defined in ms. The counter bridges both Iur and Iub and therefore reflects the delay across both.

Data Source

RNC

Source Field

pmEdchDataFrameDelayIub

Source Section

IurLink

pmEdchDataFrameDelayIub_07

Enhanced Uplink Iub dynamic delay measurement results. Stores the number of times that the measured delay matches the intervals below, defined in ms. The counter bridges both Iur and Iub and therefore reflects the delay across both.

Data Source

RNC

Source Field

pmEdchDataFrameDelayIub

Source Section

IurLink

pmEdchDataFrameDelayIub_08

Enhanced Uplink Iub dynamic delay measurement results. Stores the number of times that the measured delay matches the intervals below, defined in ms. The counter bridges both Iur and Iub and therefore reflects the delay across both.

Data Source

RNC

Source Field

pmEdchDataFrameDelayIub

Source Section

IurLink

pmEdchDataFrameDelayIub_09

Enhanced Uplink Iub dynamic delay measurement results. Stores the number of times that the measured delay matches the intervals below, defined in ms. The counter bridges both Iur and Iub and therefore reflects the delay across both.

Data Source

RNC

Source Field

pmEdchDataFrameDelayIub

Source Section

IurLink

pmEdchDataFrameDelayIub_10

Enhanced Uplink Iub dynamic delay measurement results. Stores the number of times that the measured delay matches the intervals below, defined in ms. The counter bridges both Iur and Iub and therefore reflects the delay across both.

Data Source

RNC

Source Field

pmEdchDataFrameDelayIub

Source Section

IurLink

pmEdchDataFrameDelayIub_11

Enhanced Uplink Iub dynamic delay measurement results. Stores the number of times that the measured delay matches the intervals below, defined in ms. The counter bridges both Iur and Iub and therefore reflects the delay across both.

Data Source

RNC

Source Field

pmEdchDataFrameDelayIub

Source Section

IurLink

pmEdchDataFrameDelayIub_12

Enhanced Uplink Iub dynamic delay measurement results. Stores the number of times that the measured delay matches the intervals below, defined in ms. The counter bridges both Iur and Iub and therefore reflects the delay across both.

Data Source

RNC

Source Field

pmEdchDataFrameDelayIub

Source Section

IurLink

pmEdchDataFrameDelayIub_13

Enhanced Uplink Iub dynamic delay measurement results. Stores the number of times that the measured delay matches the intervals below, defined in ms. The counter bridges both Iur and Iub and therefore reflects the delay across both.

Data Source

RNC

Source Field

pmEdchDataFrameDelayIub

Source Section

IurLink

pmEdchDataFrameDelayIub_14

Enhanced Uplink Iub dynamic delay measurement results. Stores the number of times that the measured delay matches the intervals below, defined in ms. The counter bridges both Iur and Iub and therefore reflects the delay across both.

Data Source

RNC

Source Field

pmEdchDataFrameDelayIub

Source Section

IurLink

pmEdchDataFrameDelayIub_15

Enhanced Uplink Iub dynamic delay measurement results. Stores the number of times that the measured delay matches the intervals below, defined in ms. The counter bridges both Iur and Iub and therefore reflects the delay across both.

Data Source

RNC

Source Field

pmEdchDataFrameDelayIub

Source Section

IurLink

pmEdchDataFramesLost

Number of lost E-DCH data frames.

Data Source

RNC

Source Field

pmEdchDataFramesLost

Source Section

IurLink

pmEdchDataFramesReceived

Number of correctly received E-DCH data frames.

Data Source

RNC

Source Field

pmEdchDataFramesReceived

Source Section

IurLink

pmHsSevereCong

This counter counts the number of severe congestion occurrences detected by the "CAPACITY ALLOCATION Presence Supervision" function in RNC. This is done per Iub/Iur interface. A CAPACITY ALLOCATION control frame is expected at least every one second from RBS per flow controlled HS flow. If a CA has not been received for a longer period of time, an HS Severe Congestion is detected. These interface counters shall normally be zero.

Data Source

RNC

Source Field

pmHsSevereCong

Source Section

IurLink

pmIurCommonControlFrames

Number of control frames on Iur common transport bearers.- Retired fr 5.0.11.0.0

Data Source

NodeB_RNC_RXI

Source Field

pmIurCommonControlFrames

Source Section

IurCchUp

pmIurCommonControlFramesFaulty

Number of faulty control frames on Iur common transport bearers.- Retired fr 5.0.11.0.0

Data Source

NodeB_RNC_RXI

Source Field

pmIurCommonControlFramesFaulty

Source Section

IurCchUp

pmIurCommonDlFrames

Number of downlink frames on Iur common transport bearers.- Retired fr 5.0.11.0.0

Data Source

NodeB_RNC_RXI

Source Field

pmIurCommonDlFrames

Source Section

IurCchUp

pmIurCommonDlFramesFaulty

Number of DL frames on Iur common transport bearers with faulty header- or payload CRC.- Retired fr 5.0.11.0.0

Data Source

NodeB_RNC_RXI

Source Field

pmIurCommonDlFramesFaulty

Source Section

IurCchUp

pmIurCommonEstAttExistTranspBearer

Number Iur common trans Chan resource estabt attempt toward DRNC when established transport bearer is used- Retired fr 5.0.11.0.0

Data Source

NodeB_RNC_RXI

Source Field

pmIurCommonEstAttExistTranspBearer

Source Section

IurCchCp

pmIurCommonEstAttNewTranspBearer

Number Iur common trans Chan resource estabt attempt towards DRNC when new transport bearer is requested- Retired fr 5.0.11.0.0

Data Source

NodeB_RNC_RXI

Source Field

pmIurCommonEstAttNewTranspBearer

Source Section

IurCchCp

pmIurCommonEstSuccExistTranspBearer

Number of successful Iur common trans Chan resource estabt attempt toward DRNC when established transport bearer is used- Retired fr 5.0.11.0.0

Data Source

NodeB_RNC_RXI

Source Field

pmIurCommonEstSuccExistTranspBearer

Source Section

IurCchCp

pmIurCommonEstSuccNewTranspBearer

Number of successful Iur common trans Chan resource estabt attempt towards DRNC when new transport bearer is requested- Retired fr 5.0.11.0.0

Data Source

NodeB_RNC_RXI

Source Field

pmIurCommonEstSuccNewTranspBearer

Source Section

IurCchCp

pmIurCommonFachControlFrames

Number of FACH flow control frames with credits=0 on Iur Common Transport Bearers.- Retired fr 5.0.11.0.0

Data Source

NodeB_RNC_RXI

Source Field

pmIurCommonFachControlFrames

Source Section

IurCchUp

pmIurCommonFachControlFrameTimeout

Number timeouts waiting for FACH control frame with credits > 0 on Iur common trans- Retired fr 5.0.11.0.0

Data Source

NodeB_RNC_RXI

Source Field

pmIurCommonFachControlFrameTimeout

Source Section

IurCchUp

pmIurCommonFachDataFrames

Number of FACH Data frames on Iur common transport bearers.- Retired fr 5.0.11.0.0

Data Source

NodeB_RNC_RXI

Source Field

pmIurCommonFachDataFrames

Source Section

IurCchUp

pmIurCommonFachDataFramesFaulty

Number of discarded FACH Data frames on Iur common transport bearers.- Retired fr 5.0.11.0.0

Data Source

NodeB_RNC_RXI

Source Field

pmIurCommonFachDataFramesFaulty

Source Section

IurCchUp

pmIurCommonRelease

Number of Iur common transport channel resource releases towards a DRNC.- Retired fr 5.0.11.0.0

Data Source

NodeB_RNC_RXI

Source Field

pmIurCommonRelease

Source Section

IurCchCp

pmIurCommonUlFrames

Number of uplink frames on Iur common transport bearers.- Retired fr 5.0.11.0.0

Data Source

NodeB_RNC_RXI

Source Field

pmIurCommonUlFrames

Source Section

IurCchUp

pmIurCommonUlFramesFaulty

Number UL frames Iur common trans bearers with faulty header or payload CRC.- Retired fr 5.0.11.0.0

Data Source

NodeB_RNC_RXI

Source Field

pmIurCommonUlFramesFaulty

Source Section

IurCchUp

pmIurTranspBearerRelease

Number transport bearer release due to lack of use.- Retired fr 5.0.11.0.0

Data Source

NodeB_RNC_RXI

Source Field

pmIurTranspBearerRelease

Source Section

IurCchCp

pmNoAttIncCnhhoCsNonSpeech

Number of attempts to perform incoming CN Hard Handover for a CS RAB (other than speech).

Source Field

pmNoAttIncCnhhoCsNonSpeech

Source Section

IurLink

pmNoAttIncCnhhoSpeech

Number of attempts to perform incoming CN Hard Handover for a speech RAB.

Source Field

pmNoAttIncCnhhoSpeech

Source Section

IurLink

pmNoNormalRabReleaseCs64

Number of normal CS64 RAB releases over Iur (i.e. normal releases of a drifting CS64 call), referred to the IurLink representing the DRNC for the best cell in the active set.

Source Field

pmNoNormalRabReleaseCs64

Source Section

IurLink

pmNoNormalRabReleaseCsStream

Number of normal CS streaming RAB releases over Iur (i.e. normal releases of a drifting CS streaming call), referred to the IurLink representing the DRNC for the best cell in the active set.

Source Field

pmNoNormalRabReleaseCsStream

Source Section

IurLink

pmNoNormalRabReleasePacket

Number of normal packet RAB releases over Iur (i.e. normal releases of a drifting packet call), referred to the IurLink representing the DRNC for the best cell in the active set.

Source Field

pmNoNormalRabReleasePacket

Source Section

IurLink

pmNoNormalRabReleasePacketStream

Number of normal PS streaming RAB releases over Iur (i.e. normal releases of a drifting PS stremaing call), referred to the IurLink representing the DRNC for the best cell in the active set.

Source Field

pmNoNormalRabReleasePacketStream

Source Section

IurLink

pmNoNormalRabReleaseSpeech

Number of normal speech RAB releases over Iur (i.e. normal releases of a drifting speech call), referred to the IurLink representing the DRNC for the best cell in the active set.

Source Field

pmNoNormalRabReleaseSpeech

Source Section

IurLink

pmNoOfRlForDriftingUesPerDrnc

Current number of RLs assigned in cells belonging to the DRNC, for UEs that are served by this RNC

Data Source

NodeB_RNC_RXI

Source Field

pmNoOfRlForDriftingUesPerDrnc

Source Section

IurLink

pmNoSuccIncCnhhoCsNonSpeech

Number of successful incoming CN Hard Handover for a CS RAB (other than Speech).

Source Field

pmNoSuccIncCnhhoCsNonSpeech

Source Section

IurLink

pmNoSuccIncCnhhoSpeech

Number of successful incoming CN Hard Handover for a speech RAB.

Source Field

pmNoSuccIncCnhhoSpeech

Source Section

IurLink

pmNoSystemRabReleaseCs64

Number of system CS64 RAB releases over Iur (i.e. system releases of a drifting CS64 call), referred to the IurLink representing the DRNC for the best cell in the active set.

Source Field

pmNoSystemRabReleaseCs64

Source Section

IurLink

pmNoSystemRabReleaseCsStream

Number of system CS Streaming RAB releases over Iur (i.e. system release of a drifting CS Streaming call), referred to the IurLink representing the DRNC for the best cell in the active set.

Source Field

pmNoSystemRabReleaseCsStream

Source Section

IurLink

pmNoSystemRabReleasePacket

Number of system packet RAB releases over Iur (i.e. system releases of a drifting packet call), referred to the IurLink representing the DRNC for the best cell in the active set.

Source Field

pmNoSystemRabReleasePacket

Source Section

IurLink

pmNoSystemRabReleasePacketStream

Number of overall release triggered by cchWaitCuT expiry

Source Field

pmNoSystemRabReleasePacketStream

Source Section

IurLink

pmNoSystemRabReleaseSpeech

Number of system speech RAB releases over Iur (i.e. releases of a drifting speech call), referred to the IurLink representing the DRNC for the best cell in the active set.

Source Field

pmNoSystemRabReleaseSpeech

Source Section

IurLink

RNC_RELEASE

Release

Data Source

NodeB_RNC_RXI

Source Section

IurLink

rncId

RNC identity used in the external RNC which the IurLink instance is connected to. { long, Range = 0..4095, Default=Mandatory }

Data Source

Bulk CM

Source Section

IurLink

synchRetransmissions

System constant. { long, Default=2 }

Data Source

Bulk CM

Source Section

IurLink

synchTimeout

System constant. { long, Default=2 }

Data Source

Bulk CM

Source Section

IurLink

userLabel

Provides the possibility to put a user-friendly label on the MO instance. The value is not used by the RNC. { string, LengthRange = 0..128, Default= "" }

Data Source

Bulk CM

Source Section

IurLink

LA_RNC Primitive Calculations

The following is a list of primitive calculations for the LA_RNC entity.

GRAPHmultiLineSeparator

Special Control Field for Multi-Line Graphs

Calculation

```
""
```

NUMDAYS

of days in Report

Calculation

```
DAYSINREPORT()
```

NUMHOURS

of hours in Summation Data

Calculation

LA_RNC Peg Counts

The following is a list of peg counts for the LA_RNC entity.

att

Indicates to the UE whether IMSI attach/detach is allowed. (Some IMSIs are not allowed in some LAs.) { BooleanVals, Default= TRUE }

Data Source

Bulk CM

Source Section

LocationArea

lac

Location Area Code that identifies a location area. The value must be unique in the RNC, i.e. each Location { long, Range = 1..65533, Default=Mandatory, 65535, }

Data Source

Bulk CM

Source Section

LocationArea

PERLENSEC

Period Length

Data Source

NodeB_RNC_RXI

Source Field

perlensec

Source Section

LA_RNC_WMGeneral

PERLENSEC_K

Period length in seconds aggregation summation in time domain and aggregation maximum between Network Elements.

Data Source

NodeB_RNC_RXI

Source Field

perlensec

Source Section

LA_RNC_WMGeneral

pmCnInitPagingToIdleUeLa

Number of CN-init pages sent to Idle mode UEs in spec LA (Circuit Switched pages).

Data Source

NodeB_RNC_RXI

Source Field

pmCnInitPagingToIdleUeLa

Source Section

LocationArea

reservedBy

Sequence of UtranCells which belongs to the Location Area. { sequence<UtranCell,2304>, Default = empty, Default=, ReadOnly, }

Data Source

Bulk CM

Source Section

LocationArea

RNC_RELEASE

Release

Data Source

NodeB_RNC_RXI

Source Section

LocationArea

t3212

Periodic update timer for LA update. { long, Range = 0..255, Default=10 }

Data Source

Bulk CM

Source Section

LocationArea

userLabel

Provides the possibility to put a user-friendly label on the MO instance. The value is not used by the RNC. { string, LengthRange = 0..128, Default= "" }

Data Source

Bulk CM

Source Section

LocationArea

Licensing Primitive Calculations

The following is a list of primitive calculations for the Licensing entity.

GRAPHmultiLineSeparator

Special Control Field for Multi-Line Graphs

Calculation

```
""
```

NUMDAYS

of days in Report

Calculation

```
DAYSINREPORT()
```

NUMHOURS

of hours in Summation Data

Calculation

M3uAssociation_NodeB Primitive Calculations

The following is a list of primitive calculations for the M3uAssociation_NodeB entity.

GRAPHmultiLineSeparator

Special Control Field for Multi-Line Graphs

Calculation

```
""
```

NUMDAYS

of days in Report

Calculation

```
DAYSINREPORT()
```

NUMHOURS

of hours in Summation Data

Calculation

Payload_data_messages_received_per_second

The number of payload data messages received per second

Calculation

```
pmNoOfDataMsgRec / PERLENSEC
```

Payload_data_messages_sent_per_second

The number of payload data messages sent per second

Calculation

```
pmNoOfDataMsgSent / PERLENSEC
```

M3uAssociation_NodeB Peg Counts

The following is a list of peg counts for the M3uAssociation_NodeB entity.

PERLENSEC

Period length in seconds

Source Field

PERLENSEC

Source Section

M3uAssociation_NodeB_WMGeneral

PERLENSEC_K

Period length in seconds aggregation summation in time domain and aggregation maximum between Network Elements.

Data Source

NodeB_RNC_RXI

Source Field

PERLENSEC

Source Section

M3uAssociation_NodeB_WMGeneral

pmNoOfAspacAckReceived

The total number of Application Server Process Active (ASPAC) ACK messages received through the association.

Data Source

NodeB_RXI

Source Field

pmNoOfAspacAckReceived

Source Section

M3uAssociation

pmNoOfAspacAckSent

The total number of ASPAC ACK messages sent through the association.

Data Source

NodeB_RXI

Source Field

pmNoOfAspacAckSent

Source Section

M3uAssociation

pmNoOfAspacReceived

The total number of ASPAC messages received through the association.

Data Source

NodeB_RXI

Source Field

pmNoOfAspacReceived

Source Section

M3uAssociation

pmNoOfAspacSent

The total number of ASPAC messages sent through the association.

Data Source

NodeB_RXI

Source Field

pmNoOfAspacSent

Source Section

M3uAssociation

pmNoOfAspdnAckReceived

The total number of Application Server Process Down (ASPDN) ACK messages received through the association.

Data Source

NodeB_RXI

Source Field

pmNoOfAspdnAckReceived

Source Section

M3uAssociation

pmNoOfAspdnAckSent

The total number of ASPDN ACK messages sent through the association.

Data Source

NodeB_RXI

Source Field

pmNoOfAspdnAckSent

Source Section

M3uAssociation

pmNoOfAspdnReceived

The total number of ASPDN messages received through the association.

Data Source

NodeB_RXI

Source Field

pmNoOfAspdnReceived

Source Section

M3uAssociation

pmNoOfAspdnSent

The total number of ASPDN messages sent through the association.

Data Source

NodeB_RXI

Source Field

pmNoOfAspdnSent

Source Section

M3uAssociation

pmNoOfAspiaAckReceived

The total number of Application Server Process Inactive (ASPIA) ACK messages received through the association.

Data Source

NodeB_RXI

Source Field

pmNoOfAspiaAckReceived

Source Section

M3uAssociation

pmNoOfAspiaAckSent

The total number of ASPIA ACK messages sent through the association.

Data Source

NodeB_RXI

Source Field

pmNoOfAspiaAckSent

Source Section

M3uAssociation

pmNoOfAspiaReceived

The total number of ASPIA messages received through the association.

Data Source

NodeB_RXI

Source Field

pmNoOfAspiaReceived

Source Section

M3uAssociation

pmNoOfAspiaSent

The total number of ASPIA messages sent through the association.

Data Source

NodeB_RXI

Source Field

pmNoOfAspiaSent

Source Section

M3uAssociation

pmNoOfAspupAckReceived

The total number of Application Server Process Up (ASPUP) ACK messages received through the association.

Data Source

NodeB_RXI

Source Field

pmNoOfAspupAckReceived

Source Section

M3uAssociation

pmNoOfAspupAckSent

The total number of ASPUP ACK messages sent through the association.

Data Source

NodeB_RXI

Source Field

pmNoOfAspupAckSent

Source Section

M3uAssociation

pmNoOfAspupReceived

The total number of ASPUP messages received through the association.

Data Source

NodeB_RXI

Source Field

pmNoOfAspupReceived

Source Section

M3uAssociation

pmNoOfAspupSent

The total number of ASPUP messages sent through the association.

Data Source

NodeB_RXI

Source Field

pmNoOfAspupSent

Source Section

M3uAssociation

pmNoOfCommunicationLost

The total number of communication losses.

Data Source

NodeB_RXI

Source Field

pmNoOfCommunicationLost

Source Section

M3uAssociation

pmNoOfCongestion

The total number of congestions.

Data Source

NodeB_RXI

Source Field

pmNoOfCongestion

Source Section

M3uAssociation

pmNoOfDataMsgRec

The total number of DATA (payload data) messages received through the association.

Data Source

NodeB_RXI

Source Field

pmNoOfDataMsgRec

Source Section

M3uAssociation

pmNoOfDataMsgSent

The total number of DATA messages sent on the associations related to this signalling point.

Data Source

NodeB_RXI

Source Field

pmNoOfDataMsgSent

Source Section

M3uAssociation

pmNoOfDaudMsgSent

The total number of Destination State Audit (DAUD) messages sent on the associations related to this signalling point.

Data Source

NodeB_RXI

Source Field

pmNoOfDaudMsgSent

Source Section

M3uAssociation

pmNoOfDaudReceived

The total number of DAUD messages received through the association.

Data Source

NodeB_RXI

Source Field

pmNoOfDaudReceived

Source Section

M3uAssociation

pmNoOfDavaRec

The total number of Destination Available (DAVA) messages received through the association.

Data Source

NodeB_RXI

Source Field

pmNoOfDavaRec

Source Section

M3uAssociation

pmNoOfDavaSent

The total number of DAVA messages sent through the association.

Data Source

NodeB_RXI

Source Field

pmNoOfDavaSent

Source Section

M3uAssociation

pmNoOfDunaRec

The total number of Destination Unavailable (DUNA) messages received through the association.

Data Source

NodeB_RXI

Source Field

pmNoOfDunaRec

Source Section

M3uAssociation

pmNoOfDunaSent

The total number of DUNA messages sent through the association.

Data Source

NodeB_RXI

Source Field

pmNoOfDunaSent

Source Section

M3uAssociation

pmNoOfDupuRec

The total number of Destination User Part Unavailable (DUPU) messages received through the association.

Data Source

NodeB_RXI

Source Field

pmNoOfDupuRec

Source Section

M3uAssociation

pmNoOfDupuSent

The total number of DUPU messages sent through the association.

Data Source

NodeB_RXI

Source Field

pmNoOfDupuSent

Source Section

M3uAssociation

pmNoOfErrorMsgRec

The number of ERROR messages received through the association.

Data Source

NodeB_RXI

Source Field

pmNoOfErrorMsgRec

Source Section

M3uAssociation

pmNoOfErrorMsgSent

The total number of ERROR messages sent through the association.

Data Source

NodeB_RXI

Source Field

pmNoOfErrorMsgSent

Source Section

M3uAssociation

pmNoOfM3uaDataMsgDiscarded

The total number of discarded M3UA data messages.

Data Source

NodeB_RXI

Source Field

pmNoOfM3uaDataMsgDiscarded

Source Section

M3uAssociation

pmNoOfNotifyMsgRec

The number of NOTIFY messages received through the association.

Data Source

NodeB_RXI

Source Field

pmNoOfNotifyMsgRec

Source Section

M3uAssociation

pmNoOfSconRec

The total number of Signalling Congestion (SCON) messages received through the association.

Data Source

NodeB_RXI

Source Field

pmNoOfSconRec

Source Section

M3uAssociation

pmNoOfSconSent

The total number of SCON messages sent through the association.

Data Source

NodeB_RXI

Source Field

pmNoOfSconSent

Source Section

M3uAssociation

M3uAssociation_RNC Primitive Calculations

The following is a list of primitive calculations for the M3uAssociation_RNC entity.

GRAPHmultiLineSeparator

Special Control Field for Multi-Line Graphs

Calculation

```
""
```

NUMDAYS

of days in Report

Calculation

```
DAYSINREPORT()
```

NUMHOURS

of hours in Summation Data

Calculation

Payload_data_messages_received_per_second

The number of payload data messages received per second

Calculation

```
pmNoOfDataMsgRec / PERLENSEC
```

Payload_data_messages_sent_per_second

The number of payload data messages sent per second

Calculation

```
pmNoOfDataMsgSent / PERLENSEC
```

M3uAssociation_RNC Peg Counts

The following is a list of peg counts for the M3uAssociation_RNC entity.

PERLENSEC

Period length in seconds

Source Field

PERLENSEC

Source Section

M3uAssociation_RNC_WMGeneral

PERLENSEC_K

Period length in seconds aggregation summation in time domain and aggregation maximum between Network Elements.

Data Source

NodeB_RNC_RXI

Source Field

PERLENSEC

Source Section

M3uAssociation_RNC_WMGeneral

pmNoOfAspacAckReceived

The total number of Application Server Process Active (ASPAC) ACK messages received through the association.

Data Source

RNC_RXI

Source Field

pmNoOfAspacAckReceived

Source Section

M3uAssociation

pmNoOfAspacAckSent

The total number of ASPAC ACK messages sent through the association.

Data Source

RNC_RXI

Source Field

pmNoOfAspacAckSent

Source Section

M3uAssociation

pmNoOfAspacReceived

The total number of ASPAC messages received through the association.

Data Source

RNC_RXI

Source Field

pmNoOfAspacReceived

Source Section

M3uAssociation

pmNoOfAspacSent

The total number of ASPAC messages sent through the association.

Data Source

RNC_RXI

Source Field

pmNoOfAspacSent

Source Section

M3uAssociation

pmNoOfAspdnAckReceived

The total number of Application Server Process Down (ASPDN) ACK messages received through the association.

Data Source

RNC_RXI

Source Field

pmNoOfAspdnAckReceived

Source Section

M3uAssociation

pmNoOfAspdnAckSent

The total number of ASPDN ACK messages sent through the association.

Data Source

RNC_RXI

Source Field

pmNoOfAspdnAckSent

Source Section

M3uAssociation

pmNoOfAspdnReceived

The total number of ASPDN messages received through the association.

Data Source

RNC_RXI

Source Field

pmNoOfAspdnReceived

Source Section

M3uAssociation

pmNoOfAspdnSent

The total number of ASPDN messages sent through the association.

Data Source

RNC_RXI

Source Field

pmNoOfAspdnSent

Source Section

M3uAssociation

pmNoOfAspiaAckReceived

The total number of Application Server Process Inactive (ASPIA) ACK messages received through the association.

Data Source

RNC_RXI

Source Field

pmNoOfAspiaAckReceived

Source Section

M3uAssociation

pmNoOfAspiaAckSent

The total number of ASPIA ACK messages sent through the association.

Data Source

RNC_RXI

Source Field

pmNoOfAspiaAckSent

Source Section

M3uAssociation

pmNoOfAspiaReceived

The total number of ASPIA messages received through the association.

Data Source

RNC_RXI

Source Field

pmNoOfAspiaReceived

Source Section

M3uAssociation

pmNoOfAspiaSent

The total number of ASPIA messages sent through the association.

Data Source

RNC_RXI

Source Field

pmNoOfAspiaSent

Source Section

M3uAssociation

pmNoOfAspupAckReceived

The total number of Application Server Process Up (ASPUP) ACK messages received through the association.

Data Source

RNC_RXI

Source Field

pmNoOfAspupAckReceived

Source Section

M3uAssociation

pmNoOfAspupAckSent

The total number of ASPUP ACK messages sent through the association.

Data Source

RNC_RXI

Source Field

pmNoOfAspupAckSent

Source Section

M3uAssociation

pmNoOfAspupReceived

The total number of ASPUP messages received through the association.

Data Source

RNC_RXI

Source Field

pmNoOfAspupReceived

Source Section

M3uAssociation

pmNoOfAspupSent

The total number of ASPUP messages sent through the association.

Data Source

RNC_RXI

Source Field

pmNoOfAspupSent

Source Section

M3uAssociation

pmNoOfCommunicationLost

The total number of communication losses.

Data Source

RNC_RXI

Source Field

pmNoOfCommunicationLost

Source Section

M3uAssociation

pmNoOfCongestion

The total number of congestions.

Data Source

RNC_RXI

Source Field

pmNoOfCongestion

Source Section

M3uAssociation

pmNoOfDataMsgRec

The total number of DATA (payload data) messages received through the association.

Data Source

RNC_RXI

Source Field

pmNoOfDataMsgRec

Source Section

M3uAssociation

pmNoOfDataMsgSent

The total number of DATA messages sent on the associations related to this signalling point.

Data Source

RNC_RXI

Source Field

pmNoOfDataMsgSent

Source Section

M3uAssociation

pmNoOfDaudMsgSent

The total number of Destination State Audit (DAUD) messages sent on the associations related to this signalling point.

Data Source

RNC_RXI

Source Field

pmNoOfDaudMsgSent

Source Section

M3uAssociation

pmNoOfDaudReceived

The total number of DAUD messages received through the association.

Data Source

RNC_RXI

Source Field

pmNoOfDaudReceived

Source Section

M3uAssociation

pmNoOfDavaRec

The total number of Destination Available (DAVA) messages received through the association.

Data Source

RNC_RXI

Source Field

pmNoOfDavaRec

Source Section

M3uAssociation

pmNoOfDavaSent

The total number of DAVA messages sent through the association.

Data Source

RNC_RXI

Source Field

pmNoOfDavaSent

Source Section

M3uAssociation

pmNoOfDunaRec

The total number of Destination Unavailable (DUNA) messages received through the association.

Data Source

RNC_RXI

Source Field

pmNoOfDunaRec

Source Section

M3uAssociation

pmNoOfDunaSent

The total number of DUNA messages sent through the association.

Data Source

RNC_RXI

Source Field

pmNoOfDunaSent

Source Section

M3uAssociation

pmNoOfDupuRec

The total number of Destination User Part Unavailable (DUPU) messages received through the association.

Data Source

RNC_RXI

Source Field

pmNoOfDupuRec

Source Section

M3uAssociation

pmNoOfDupuSent

The total number of DUPU messages sent through the association.

Data Source

RNC_RXI

Source Field

pmNoOfDupuSent

Source Section

M3uAssociation

pmNoOfErrorMsgRec

The number of ERROR messages received through the association.

Data Source

RNC_RXI

Source Field

pmNoOfErrorMsgRec

Source Section

M3uAssociation

pmNoOfErrorMsgSent

The total number of ERROR messages sent through the association.

Data Source

RNC_RXI

Source Field

pmNoOfErrorMsgSent

Source Section

M3uAssociation

pmNoOfM3uaDataMsgDiscarded

The total number of discarded M3UA data messages.

Data Source

RNC_RXI

Source Field

pmNoOfM3uaDataMsgDiscarded

Source Section

M3uAssociation

pmNoOfNotifyMsgRec

The number of NOTIFY messages received through the association.

Data Source

RNC_RXI

Source Field

pmNoOfNotifyMsgRec

Source Section

M3uAssociation

pmNoOfSconRec

The total number of Signalling Congestion (SCON) messages received through the association.

Data Source

RNC_RXI

Source Field

pmNoOfSconRec

Source Section

M3uAssociation

pmNoOfSconSent

The total number of SCON messages sent through the association.

Data Source

RNC_RXI

Source Field

pmNoOfSconSent

Source Section

M3uAssociation

MccService Primitive Calculations

The following is a list of primitive calculations for the MccService entity.

GRAPHmultiLineSeparator

Special Control Field for Multi-Line Graphs

Calculation

```
""
```

NUMDAYS

of days in Report

Calculation

```
DAYSINREPORT()
```

NUMHOURS

of hours in Summation Data

Calculation

p_Seizures_Sucess_Rate

Percentege of Seizures which are sucessful

Calculation

```
100.0 * vsum( pmTotalSeizures, -1 * pmUnsuccSeizures ) / pmTotalSeizures
```

MccService Peg Counts

The following is a list of peg counts for the MccService entity.

PERLENSEC

Period length in seconds

Data Source

RNC_RXI

Source Field

PERLENSEC

Source Section

MccService_Gen

pmForcedRelease

The total number of forced device releases.

Data Source

RNC_RXI

Source Field

pmForcedRelease

Source Section

MccService

pmNormalRelease

The total number of normal device releases.

Data Source

RNC_RXI

Source Field

pmNormalRelease

Source Section

MccService

pmTotalSeizures

The total number of seizure attempt of devices from this device Service.

Data Source

RNC_RXI

Source Field

pmTotalSeizures

Source Section

MccService

pmUnsuccSeizures

The total number of failed seizure attempts due to congestion.

Data Source

RNC_RXI

Source Field

pmUnsuccSeizures

Source Section

MccService

RNC_RELEASE

Release

Data Source

RNC_RXI

Source Field

RNC_RELEASE

MediumAccUnit_NodeB Primitive Calculations

The following is a list of primitive calculations for the MediumAccUnit_NodeB entity.

GRAPHmultiLineSeparator

Special Control Field for Multi-Line Graphs

Calculation

```
""
```

NUMDAYS

of days in Report

Calculation

```
DAYSINREPORT()
```

Updated: 2009-07-22

NUMHOURS

of hours in Summation Data

Calculation

MediumAccUnit_NodeB Peg Counts

The following is a list of peg counts for the MediumAccUnit_NodeB entity.

NodeB_RELEASE

Release

PERLENSEC

Period Length

Source Field

PERLENSEC

Source Section

MediumAccUnit_RNC_WMGeneral

PERLENSEC_K

Period length in seconds aggregation summation in time domain and aggregation maximum between Network Elements.

Source Field

PERLENSEC

Source Section

MediumAccUnit_NodeB_WMGeneral

pmNoOfDot3StatsFCSErrors

(Updated Source Section on RP12)Number of frames that did not pass the FCS check.

Source Field

pmNoOfDot3StatsLateCollisions

Source Section

MediumAccessUnit

pmNoOfDot3StatsLateCollisions

(Updated Source Section on RP12)Number times that collision was detected interface after minimum length of a frame.

Source Field

pmNoOfDot3StatsLateCollisions

Source Section

MediumAccessUnit

MediumAccUnit_RNC Primitive Calculations

The following is a list of primitive calculations for the MediumAccUnit_RNC entity.

GRAPHmultiLineSeparator

Special Control Field for Multi-Line Graphs

Calculation

```
""
```

NUMDAYS

of days in Report

Calculation

```
DAYSINREPORT()
```

NUMHOURS

of hours in Summation Data

Calculation

MediumAccUnit_RNC Peg Counts

The following is a list of peg counts for the MediumAccUnit_RNC entity.

PERLENSEC

Period Length

Source Field

PERLENSEC

Source Section

MediumAccUnit_NodeB_WMGeneral

PERLENSEC_K

Period length in seconds aggregation summation in time domain and aggregation maximum between Network Elements.

Source Field

PERLENSEC

Source Section

MediumAccUnit_RNC_WMGeneral

pmNoOfDot3StatsFCSErrors

(Updated Source Field/Section on RP12)Number of frames that did not pass the FCS check.

Source Field

pmNoOfDot3StatsLateCollisions

Source Section

MediumAccessUnit

pmNoOfDot3StatsLateCollisions

(Updated Source Field/Section on RP12)Number times that collision was detected interface after minimum length of a frame.

Source Field

pmNoOfDot3StatsLateCollisions

Source Section

MediumAccessUnit

RNC_RELEASE

Release

MfhService Primitive Calculations

The following is a list of primitive calculations for the MfhService entity.

GRAPHmultiLineSeparator

Special Control Field for Multi-Line Graphs

Calculation

```
""
```

NUMDAYS

of days in Report

Calculation

```
DAYSINREPORT()
```

NUMHOURS

of hours in Summation Data

Calculation

MfhService Peg Counts

The following is a list of peg counts for the MfhService entity.

PERLENSEC

Period length in seconds

Data Source

RNC_RXI

Source Field

PERLENSEC

Source Section

MfhService_Gen

RNC_RELEASE

Release

Data Source

RNC_RXI

Source Field

RNC_RELEASE

Source Section

MfhService_Gen

MpcService Primitive Calculations

The following is a list of primitive calculations for the MpcService entity.

GRAPHmultiLineSeparator

Special Control Field for Multi-Line Graphs

Calculation

```
""
```

NUMDAYS

of days in Report

Calculation

```
DAYSINREPORT()
```

NUMHOURS

of hours in Summation Data

Calculation

p_Seizures_Sucess_Rate

Percentege of Seizures which are sucessful

Calculation

```
100.0 * vsum( pmTotalSeizures, -1 * pmUnsuccSeizures ) / pmTotalSeizures
```

MpcService Peg Counts

The following is a list of peg counts for the MpcService entity.

PERLENSEC

Period length in seconds

Data Source

RNC_RXI

Source Field

PERLENSEC

Source Section

MpcService_Gen

pmForcedRelease

Total Number of forced device releases for ex due to spontaneous device fault

Data Source

RNC_RXI

Source Field

pmForcedRelease

Source Section

MpcService

pmNormalRelease

Total Number of normal device releases

Data Source

RNC_RXI

Source Field

pmNormalRelease

Source Section

MpcService

pmTotalSeizures

The total number of seizure attempt of devices from this device Service.

Data Source

RNC_RXI

Source Field

pmTotalSeizures

Source Section

MpcService

pmUnsuccSeizures

The total number of failed seizure attempts due to congestion.

Data Source

RNC_RXI

Source Field

pmUnsuccSeizures

Source Section

MpcService

RNC_RELEASE

Release

Data Source

RNC_RXI

Source Field

RNC_RELEASE

Source Section

MpcService_Gen

Mtp2Tp_NodeB Primitive Calculations

The following is a list of primitive calculations for the Mtp2Tp_NodeB entity.

GRAPHmultiLineSeparator

Special Control Field for Multi-Line Graphs

Calculation

```
""
```

NUMDAYS

of days in Report

Calculation

```
DAYSINREPORT()
```

NUMHOURS

of hours in Summation Data

Calculation

Received_MSUs_per_second

Received MSUs per second

Calculation

```
pmNoOfMSUReceived / PERLENSEC
```

Mtp2Tp_NodeB Peg Counts

The following is a list of peg counts for the Mtp2Tp_NodeB entity.

PERLENSEC

Period length in seconds

Source Field

PERLENSEC

Source Section

Mtp2Tp_NodeB_WMGeneral

PERLENSEC_K

Period length in seconds aggregation summation in time domain and aggregation maximum between Network Elements.

Source Field

PERLENSEC

Source Section

Mtp2Tp_NodeB_WMGeneral

pmLocalSIBTime

The total time of Status Indication Busy (SIB) in the local node.

Data Source

NodeB_RXI

Source Field

pmLocalSIBTime

Source Section

Mtp2TpAnsi,Mtp2TpItu

pmNoOfMSUReceived

The total number of MSUs received.

Data Source

NodeB_RXI

Source Field

pmNoOfMSUReceived

Source Section

Mtp2TpAnsi,Mtp2TpItu

pmNoOfNacks

The total number of negative acknowledgements received.

Data Source

NodeB_RXI

Source Field

pmNoOfNacks

Source Section

Mtp2TpAnsi,Mtp2TpItu

pmNoOfReTransmittedOctets

The total number of re-transmitted octets.

Data Source

NodeB_RXI

Source Field

pmNoOfReTransmittedOctets

Source Section

Mtp2TpAnsi,Mtp2TpItu

pmNoOfSendBufferOctets

The total number of octets in send buffer.

Data Source

NodeB_RXI

Source Field

pmNoOfSendBufferOctets

Source Section

Mtp2TpAnsi,Mtp2TpItu

pmNoOfSIOSIFReceived

The total number of Service Information Octet (SIO) & Signal Information Field (SIF) octets received.

Data Source

NodeB_RXI

Source Field

pmNoOfSIOSIFReceived

Source Section

Mtp2TpAnsi,Mtp2TpItu

pmNoOfSIOSIFTransmitted

The total number of SIO & SIF octets transmitted.

Data Source

NodeB_RXI

Source Field

pmNoOfSIOSIFTransmitted

Source Section

Mtp2TpAnsi,Mtp2TpItu

pmNoOfStartedRBCongestion

The total number of started local RB congestions.

Data Source

NodeB_RXI

Source Field

pmNoOfStartedRBCongestion

Source Section

Mtp2TpAnsi,Mtp2TpItu

pmNoOfSuReceivedInError

The total number of signal units received in error.

Data Source

NodeB_RXI

Source Field

pmNoOfSuReceivedInError

Source Section

Mtp2TpAnsi,Mtp2TpItu

pmRemoteSIBTime

The total time of SIB in a remote node.

Data Source

NodeB_RXI

Source Field

pmRemoteSIBTime

Source Section

Mtp2TpAnsi,Mtp2TpItu

Mtp2Tp_RNC Primitive Calculations

The following is a list of primitive calculations for the Mtp2Tp_RNC entity.

GRAPHmultiLineSeparator

Special Control Field for Multi-Line Graphs

Calculation

```
""
```

NUMDAYS

of days in Report

Calculation

```
DAYSINREPORT()
```

NUMHOURS

of hours in Summation Data

Calculation

Received_MSUs_per_second

Received MSUs per second

Calculation

```
pmNoOfMSUReceived / PERLENSEC
```

Updated: 2009-07-22

Mtp2Tp_RNC Peg Counts

The following is a list of peg counts for the Mtp2Tp_RNC entity.

PERLENSEC

Period length in seconds

Source Field

PERLENSEC

Source Section

Mtp2Tp_RNC_WMGeneral

PERLENSEC_K

Period length in seconds aggregation summation in time domain and aggregation maximum between Network Elements.

Data Source

NodeB_RNC_RXI

Source Field

PERLENSEC

Source Section

Mtp2Tp_RNC_WMGeneral

pmLocalSIBTime

The total time of Status Indication Busy (SIB) in the local node.

Data Source

RNC_RXI

Source Field

pmLocalSIBTime

Source Section

Mtp2TpAnsi,Mtp2TpItu

pmNoOfMSUReceived

The total number of MSUs received.

Data Source

RNC_RXI

Source Field

pmNoOfMSUReceived

Source Section

Mtp2TpAnsi,Mtp2TpItu

pmNoOfNacks

The total number of negative acknowledgements received.

Data Source

RNC_RXI

Source Field

pmNoOfNacks

Source Section

Mtp2TpAnsi,Mtp2TpItu

pmNoOfReTransmittedOctets

The total number of re-transmitted octets.

Data Source

RNC_RXI

Source Field

pmNoOfReTransmittedOctets

Source Section

Mtp2TpAnsi,Mtp2TpItu

pmNoOfSendBufferOctets

The total number of octets in send buffer.

Data Source

RNC_RXI

Source Field

pmNoOfSendBufferOctets

Source Section

Mtp2TpAnsi,Mtp2TpItu

pmNoOfSIOSIFReceived

The total number of Service Information Octet (SIO) & Signal Information Field (SIF) octets received.

Data Source

RNC_RXI

Source Field

pmNoOfSIOSIFReceived

Source Section

Mtp2TpAnsi,Mtp2TpItu

pmNoOfSIOSIFTransmitted

The total number of SIO & SIF octets transmitted.

Data Source

RNC_RXI

Source Field

pmNoOfSIOSIFTransmitted

Source Section

Mtp2TpAnsi,Mtp2TpItu

pmNoOfStartedRBCongestion

The total number of started local RB congestions.

Data Source

RNC_RXI

Source Field

pmNoOfStartedRBCongestion

Source Section

Mtp2TpAnsi,Mtp2TpItu

pmNoOfSuReceivedInError

The total number of signal units received in error.

Data Source

RNC_RXI

Source Field

pmNoOfSuReceivedInError

Source Section

Mtp2TpAnsi,Mtp2TpItu

pmRemoteSIBTime

The total time of SIB in a remote node.

Data Source

RNC_RXI

Source Field

pmRemoteSIBTime

Source Section

Mtp2TpAnsi,Mtp2TpItu

Mtp3bAp_NodeB Primitive Calculations

The following is a list of primitive calculations for the Mtp3bAp_NodeB entity.

GRAPHmultiLineSeparator

Special Control Field for Multi-Line Graphs

Calculation

```
""
```

NUMDAYS

of days in Report

Calculation

```
DAYSINREPORT()
```

NUMHOURS

of hours in Summation Data

Calculation

Mtp3bAp_NodeB Peg Counts

The following is a list of peg counts for the Mtp3bAp_NodeB entity.

PERLENSEC

Period length in seconds

Data Source

NodeB_RNC_RXI

Source Field

perlensec

Source Section

Mtp3bAp_NodeB_WMGeneral

PERLENSEC_K

Period length in seconds aggregation summation in time domain and aggregation maximum between Network Elements.

Data Source

NodeB_RNC_RXI

Source Field

perlensec

Source Section

Mtp3bAp_NodeB_WMGeneral

pmNoOfAdjacentSPNotAccessible

Number of Adjacent SPs that are not accessible through direct links.

Data Source

NodeB_RNC_RXI

Source Field

pmNoOfAdjacentSPNotAccessible

Source Section

Mtp3bAp_NodeB

pmNoOfUserPartUnavailRec

Number of received User Part Unavailable messages.

Data Source

NodeB_RNC_RXI

Source Field

pmNoOfUserPartUnavailRec

Source Section

Mtp3bAp_NodeB

Mtp3bAp_RNC Primitive Calculations

The following is a list of primitive calculations for the Mtp3bAp_RNC entity.

GRAPHmultiLineSeparator

Special Control Field for Multi-Line Graphs

Calculation

```
""
```

NUMDAYS

of days in Report

Calculation

```
DAYSINREPORT()
```

NUMHOURS

of hours in Summation Data

Calculation

Mtp3bAp_RNC Peg Counts

The following is a list of peg counts for the Mtp3bAp_RNC entity.

PERLENSEC

Period length in seconds

Data Source

NodeB_RNC_RXI

Source Field

perlensec

Source Section

Mtp3bAp_RNC_WMGeneral

PERLENSEC_K

Period length in seconds aggregation summation in time domain and aggregation maximum between Network Elements.

Data Source

NodeB_RNC_RXI

Source Field

perlensec

Source Section

Mtp3bAp_RNC_WMGeneral

pmNoOfAdjacentSPNotAccessible

Number of Adjacent SPs that are not accessible through direct links.

Data Source

NodeB_RNC_RXI

Source Field

pmNoOfAdjacentSPNotAccessible

Source Section

Mtp3bAp_RNC

pmNoOfUserPartUnavailRec

Number of received User Part Unavailable messages.

Data Source

NodeB_RNC_RXI

Source Field

pmNoOfUserPartUnavailRec

Source Section

Mtp3bAp_RNC

Mtp3bSl_NodeB Primitive Calculations

The following is a list of primitive calculations for the Mtp3bSl_NodeB entity.

GRAPHmultiLineSeparator

Special Control Field for Multi-Line Graphs

Calculation

```
""
```

NUMDAYS

of days in Report

Calculation

```
DAYSINREPORT()
```

NUMHOURS

of hours in Summation Data

Calculation

Mtp3bSl_NodeB Peg Counts

The following is a list of peg counts for the Mtp3bSl_NodeB entity.

PERLENSEC

Period length in seconds

Data Source

NodeB_RNC_RXI

Source Field

perlensec

Source Section

Mtp3bSl_NodeB_WMGeneral

PERLENSEC_K

Period length in seconds aggregation summation in time domain and aggregation maximum between Network Elements.

Data Source

NodeB_RNC_RXI

Source Field

perlensec

Source Section

Mtp3bSl_NodeB_WMGeneral

pmNoOfAALINServiceInd

Number of received link-in-service indications.

Data Source

NodeB_RNC_RXI

Source Field

pmNoOfAALINServiceInd

Source Section

Mtp3bSl_NodeB

pmNoOfAALOUTInd

Number of received link-out-of-service indications.

Data Source

NodeB_RNC_RXI

Source Field

pmNoOfAALOUTInd

Source Section

Mtp3bSl_NodeB

pmNoOfCBDSent

Number of sent CBD messages.

Data Source

NodeB_RNC_RXI

Source Field

pmNoOfCBDSent

Source Section

Mtp3bSl_NodeB

pmNoOfCOOXCOSent

Number of sent change over order (COO/XCO) messages.

Data Source

NodeB_RNC_RXI

Source Field

pmNoOfCOOXCOSent

Source Section

Mtp3bSl_NodeB

pmNoOfLocalLinkCongestCeaseRec

Number of local link congestion ceased primitives received.

Data Source

NodeB_RNC_RXI

Source Field

pmNoOfLocalLinkCongestCeaseRec

Source Section

Mtp3bSl_NodeB

pmNoOfLocalLinkCongestRec

Number of local link congestion primitives received.

Data Source

NodeB_RNC_RXI

Source Field

pmNoOfLocalLinkCongestRec

Source Section

Mtp3bSl_NodeB

pmNoOfMSURec

Number of received MSUs on this Mtp3bSrs.

Data Source

NodeB_RNC_RXI

Source Field

pmNoOfMSURec

Source Section

Mtp3bSl_NodeB

pmNoOfMSUSent

Number of sent MSUs on this signaling link.

Data Source

NodeB_RNC_RXI

Source Field

pmNoOfMSUSent

Source Section

Mtp3bSl_NodeB

Mtp3bSl_RNC Primitive Calculations

The following is a list of primitive calculations for the Mtp3bSl_RNC entity.

GRAPHmultiLineSeparator

Special Control Field for Multi-Line Graphs

Calculation

```
""
```

NUMDAYS

of days in Report

Calculation

```
DAYSINREPORT()
```

NUMHOURS

of hours in Summation Data

Calculation

Mtp3bSl_RNC Peg Counts

The following is a list of peg counts for the Mtp3bSl_RNC entity.

PERLENSEC

Period length in seconds

Data Source

NodeB_RNC_RXI

Source Field

perlensec

Source Section

Mtp3bSl_RNC_WMGeneral

PERLENSEC_K

Period length in seconds aggregation summation in time domain and aggregation maximum between Network Elements.

Data Source

NodeB_RNC_RXI

Source Field

perlensec

Source Section

Mtp3bSl_RNC_WMGeneral

pmNoOfAALINServiceInd

Number of received link-in-service indications.

Data Source

NodeB_RNC_RXI

Source Field

pmNoOfAALINServiceInd

Source Section

Mtp3bSl_RNC

pmNoOfAALOUTInd

Number of received link-out-of-service indications.

Data Source

NodeB_RNC_RXI

Source Field

pmNoOfAALOUTInd

Source Section

Mtp3bSl_RNC

pmNoOfCBDSent

Number of sent CBD messages.

Data Source

NodeB_RNC_RXI

Source Field

pmNoOfCBDSent

Source Section

Mtp3bSl_RNC

pmNoOfCOOXCOSent

Number of sent change over order (COO/XCO) messages.

Data Source

NodeB_RNC_RXI

Source Field

pmNoOfCOOXCOSent

Source Section

Mtp3bSl_RNC

pmNoOfLocalLinkCongestCeaseRec

Number of local link congestion ceased primitives received.

Data Source

NodeB_RNC_RXI

Source Field

pmNoOfLocalLinkCongestCeaseRec

Source Section

Mtp3bSl_RNC

pmNoOfLocalLinkCongestRec

Number of local link congestion primitives received.

Data Source

NodeB_RNC_RXI

Source Field

pmNoOfLocalLinkCongestRec

Source Section

Mtp3bSl_RNC

pmNoOfMSURec

Number of received MSUs on this Mtp3bSrs.

Data Source

NodeB_RNC_RXI

Source Field

pmNoOfMSURec

Source Section

Mtp3bSl_RNC

pmNoOfMSUSent

Number of sent MSUs on this signaling link.

Data Source

NodeB_RNC_RXI

Source Field

pmNoOfMSUSent

Source Section

Mtp3bSl_RNC

Mtp3bSls_NodeB Primitive Calculations

The following is a list of primitive calculations for the Mtp3bSls_NodeB entity.

GRAPHmultiLineSeparator

Special Control Field for Multi-Line Graphs

Calculation

```
""
```

NUMDAYS

of days in Report

Calculation

```
DAYSINREPORT()
```

NUMHOURS

of hours in Summation Data

Calculation

Mtp3bSls_RNC Primitive Calculations

The following is a list of primitive calculations for the Mtp3bSls_RNC entity.

GRAPHmultiLineSeparator

Special Control Field for Multi-Line Graphs

Calculation

```
""
```

NUMDAYS

of days in Report

Calculation

```
DAYSINREPORT()
```

NUMHOURS

of hours in Summation Data

Calculation

Mtp3bSp_NodeB Primitive Calculations

The following is a list of primitive calculations for the Mtp3bSp_NodeB entity.

GRAPHmultiLineSeparator

Special Control Field for Multi-Line Graphs

Calculation

```
""
```

NUMDAYS

of days in Report

Calculation

```
DAYSINREPORT()
```

NUMHOURS

of hours in Summation Data

Calculation

Mtp3bSp_NodeB Peg Counts

The following is a list of peg counts for the Mtp3bSp_NodeB entity.

PERLENSEC

Period length in seconds

Data Source

NodeB_RNC_RXI

Source Field

perlensec

Source Section

Mtp3bSp_NodeB_WMGeneral

PERLENSEC_K

Period length in seconds aggregation summation in time domain and aggregation maximum between Network Elements.

Data Source

NodeB_RNC_RXI

Source Field

perlensec

Source Section

Mtp3bSp_NodeB_WMGeneral

pmNoOfCBARec

The total number of received Changeback Acknowledge (CBA) messages.

Data Source

NodeB_RXI

Source Field

pmNoOfCBARec

Source Section

Mtp3bSpItu

pmNoOfCBASent

The total number of sent CBA messages.

Data Source

NodeB_RXI

Source Field

pmNoOfCBASent

Source Section

Mtp3bSpItu

pmNoOfChangeBackDeclRec

The total number of received Change Back Declaration (CBD) messages.

Data Source

NodeB_RXI

Source Field

pmNoOfChangeBackDeclRec

Source Section

Mtp3bSpItu

pmNoOfChangeOverRec

The total number of received Changeover Order (COO) messages.

Data Source

NodeB_RXI

Source Field

pmNoOfChangeOverRec

Source Section

Mtp3bSpItu

pmNoOfCOAXCARec

The total number of received COA/XCA messages.

Data Source

NodeB_RXI

Source Field

pmNoOfCOAXCARec

Source Section

Mtp3bSpItu

pmNoOfCOAXCASent

The total number of sent Changeover Acknowledge (COA)/Extended Changeover Acknowledge (XCA) messages.

Data Source

NodeB_RXI

Source Field

pmNoOfCOAXCASent

Source Section

Mtp3bSpItu

pmNoOfControlledRerouteSuccessPerf

The total number of successfully performed controlled reroutings.

Data Source

NodeB_RXI

Source Field

pmNoOfControlledRerouteSuccessPerf

Source Section

Mtp3bSpItu

pmNoOfECARec

The total number of received ECA messages.

Data Source

NodeB_RXI

Source Field

pmNoOfECARec

Source Section

Mtp3bSpItu

pmNoOfECASent

The total number of sent Emergency Changeover Acknowledge (ECA) messages.

Data Source

NodeB_RXI

Source Field

pmNoOfECASent

Source Section

Mtp3bSpItu

pmNoOfECOSent

The total number of sent ECO messages.

Data Source

NodeB_RXI

Source Field

pmNoOfECOSent

Source Section

Mtp3bSpItu

pmNoOfEmergencyChangeOverRec

The total number of received Emergency Changeover Order (ECO) messages.

Data Source

NodeB_RXI

Source Field

pmNoOfEmergencyChangeOverRec

Source Section

Mtp3bSpItu

pmNoOfForcedRerouteSuccessPerf

The total number of successfully performed forced reroutings.

Data Source

NodeB_RXI

Source Field

pmNoOfForcedRerouteSuccessPerf

Source Section

Mtp3bSpItu

pmNoOfInAssEstReqInStDownWhStEstIsBlck

The number of incoming requests for association establishment when the state on the association is 'DOWN' and establishment of associations is blocked.

Data Source

NodeB_RXI

Source Field

pmNoOfIncomingAssocEstabRequestInStateDownWhenStateEstabIsBlocked

Source Section

Mtp3bSpAnsi

pmNoOfMaxTrialsForAssocActivReached

The number of times that the max limit for trying to activate an association has been reached.

Data Source

NodeB_RXI

Source Field

pmNoOfMaxTrialsForAssocActivReached

Source Section

Mtp3bSpAnsi

pmNoOfMaxTrialsForAssocEstabReached

The number of times that the max limit for trying to establish an association has been reached.

Data Source

NodeB_RXI

Source Field

pmNoOfMaxTrialsForAssocEstabReached

Source Section

Mtp3bSpAnsi

pmNoOfSctpAssociationRestart

The total number of SCTP association restarts.

Data Source

NodeB_RXI

Source Field

pmNoOfSctpAssociationRestart

Source Section

Mtp3bSpItu, Mtp3bSpAnsi

pmNoOfSctpBufOverflow

The total number of SCTP stop sending data.

Data Source

NodeB_RXI

Source Field

pmNoOfSctpBufOverflow

Source Section

Mtp3bSpItu

pmNoOfSctpCommunicationErr

The total number of SCTP communication error.

Data Source

NodeB_RXI

Source Field

pmNoOfSctpCommunicationErr

Source Section

Mtp3bSpItu, Mtp3bSpAnsi

pmNoOfSctpNetworkStatusChange

The total number of SCTP network status changes.

Data Source

NodeB_RXI

Source Field

pmNoOfSctpNetworkStatusChange

Source Section

Mtp3bSpItu, Mtp3bSpAnsi

pmNoOfSctpResumeSending

The total number of SCTP resume sending data.

Data Source

NodeB_RXI

Source Field

pmNoOfSctpResumeSending

Source Section

Mtp3bSpItu, Mtp3bSpAnsi

pmNoOfSctpSendFailure

The total number of SCTP send failure.

Data Source

NodeB_RXI

Source Field

pmNoOfSctpSendFailure

Source Section

Mtp3bSpItu, Mtp3bSpAnsi

pmNoOfSLTAFirstTimeOutRec

The total number of received Signalling Link Test Acknowledge (SLTA) messages for first time out check.

Data Source

NodeB_RXI

Source Field

pmNoOfSLTAFirstTimeOutRec

Source Section

Mtp3bSpItu

pmNoOfSLTASecondTimeOutRec

The total number of received Signalling Link Test Acknowledge (SLTA) messages for second time out check.

Data Source

NodeB_RXI

Source Field

pmNoOfSLTASecondTimeOutRec

Source Section

Mtp3bSpItu

pmNoOfSuccessAssocAbort

The number of successful abortions of signalling associations.

Data Source

NodeB_RXI

Source Field

pmNoOfSuccessAssocAbort

Source Section

Mtp3bSpAnsi

pmNoOfSuccessAssocEstablish

The total number of successful association establishments.

Data Source

NodeB_RXI

Source Field

pmNoOfSuccessAssocEstablish

Source Section

Mtp3bSpItu, Mtp3bSpAnsi

pmNoOfTimerT21WasStarted

The total number of times the timer T21 was started.

Data Source

NodeB_RXI

Source Field

pmNoOfTimerT21WasStarted

Source Section

Mtp3bSpItu

pmNoOfTRARec

The total number of Recieved TRA messages.

Data Source

NodeB_RXI

Source Field

pmNoOfTRARec

Source Section

Mtp3bSpItu

pmNoOfTRASent

The total number of sent TRA messages.

Data Source

NodeB_RXI

Source Field

pmNoOfTRASent

Source Section

Mtp3bSpItu

pmNoOfUnsuccessAssocEstablish

The total number of unsuccessful association establishments.

Data Source

NodeB_RXI

Source Field

pmNoOfUnsuccessAssocEstablish

Source Section

Mtp3bSpItu, Mtp3bSpAnsi

pmNoOfUnsuccessAssocShutDown

(Retired on Utan P6)The number of unsuccessful shutdowns of signalling associations.

Data Source

NodeB_RXI

Source Field

pmNoOfUnsuccessAssocShutDown

Source Section

Mtp3bSpItu

pmNoOfUnsuccessForcedRerouting

The total number of unsuccessfully performed forced reroutings.

Data Source

NodeB_RXI

Source Field

pmNoOfUnsuccessForcedRerouting

Source Section

Mtp3bSpItu

pmNoOfUPMsgDiscardedDueToRoutingErr

The total number of user part messages (MTP_Transfer_Req) discarded due to routing error.

Data Source

NodeB_RXI

Source Field

pmNoOfUPMsgDiscardedDueToRoutingErr

Source Section

Mtp3bSpItu

Mtp3bSp_RNC Primitive Calculations

The following is a list of primitive calculations for the Mtp3bSp_RNC entity.

GRAPHmultiLineSeparator

Special Control Field for Multi-Line Graphs

Calculation

```
""
```

NUMDAYS

of days in Report

Calculation

```
DAYSINREPORT()
```

NUMHOURS

of hours in Summation Data

Calculation

Mtp3bSp_RNC Peg Counts

The following is a list of peg counts for the Mtp3bSp_RNC entity.

PERLENSEC

Period length in seconds

Data Source

NodeB_RNC_RXI

Source Field

perlensec

Source Section

Mtp3bSp_RNC_WMGeneral

PERLENSEC_K

Period length in seconds aggregation summation in time domain and aggregation maximum between Network Elements.

Data Source

NodeB_RNC_RXI

Source Field

perlensec

Source Section

Mtp3bSp_RNC_WMGeneral

pmNoOfCBARec

The total number of received Changeback Acknowledge (CBA) messages.

Data Source

RNC_RXI

Source Field

pmNoOfCBARec

Source Section

Mtp3bSpItu,Mtp3bSpAnsi

pmNoOfCBASent

The total number of sent CBA messages.

Data Source

RNC_RXI

Source Field

pmNoOfCBASent

Source Section

Mtp3bSpItu,Mtp3bSpAnsi

pmNoOfChangeBackDeclRec

The total number of received Change Back Declaration (CBD) messages.

Data Source

RNC_RXI

Source Field

pmNoOfChangeBackDeclRec

Source Section

Mtp3bSpItu,Mtp3bSpAnsi

pmNoOfChangeOverRec

The total number of received Changeover Order (COO) messages.

Data Source

RNC_RXI

Source Field

pmNoOfChangeOverRec

Source Section

Mtp3bSpItu,Mtp3bSpAnsi

pmNoOfCOAXCARec

The total number of received COA/XCA messages.

Data Source

RNC_RXI

Source Field

pmNoOfCOAXCARec

Source Section

Mtp3bSpItu,Mtp3bSpAnsi

pmNoOfCOAXCASent

The total number of sent Changeover Acknowledge (COA)/Extended Changeover Acknowledge (XCA) messages.

Data Source

RNC_RXI

Source Field

pmNoOfCOAXCASent

Source Section

Mtp3bSpItu,Mtp3bSpAnsi

pmNoOfControlledRerouteSuccessPerf

The total number of successfully performed controlled reroutings.

Data Source

RNC_RXI

Source Field

pmNoOfControlledRerouteSuccessPerf

Source Section

Mtp3bSpItu,Mtp3bSpAnsi

pmNoOfECARec

The total number of received ECA messages.

Data Source

RNC_RXI

Source Field

pmNoOfECARec

Source Section

Mtp3bSpItu,Mtp3bSpAnsi

pmNoOfECASent

The total number of sent Emergency Changeover Acknowledge (ECA) messages.

Data Source

RNC_RXI

Source Field

pmNoOfECASent

Source Section

Mtp3bSpItu,Mtp3bSpAnsi

pmNoOfECOSent

The total number of sent ECO messages.

Data Source

RNC_RXI

Source Field

pmNoOfECOSent

Source Section

Mtp3bSpItu,Mtp3bSpAnsi

pmNoOfEmergencyChangeOverRec

The total number of received Emergency Changeover Order (ECO) messages.

Data Source

RNC_RXI

Source Field

pmNoOfEmergencyChangeOverRec

Source Section

Mtp3bSpItu,Mtp3bSpAnsi

pmNoOfForcedRerouteSuccessPerf

The total number of successfully performed forced reroutings.

Data Source

RNC_RXI

Source Field

pmNoOfForcedRerouteSuccessPerf

Source Section

Mtp3bSpItu,Mtp3bSpAnsi

pmNoOfInAssEstReqInStDownWhStEstIsBlck

The number of incoming requests for association establishment when the state on the association is 'DOWN' and establishment of associations is blocked.

Data Source

RNC_RXI

Source Field

pmNoOfIncomingAssocEstabRequestInStateDownWhenStateEstabIsBlocked

Source Section

Mtp3bSpAnsi

pmNoOfMaxTrialsForAssocActivReached

The number of times that the max limit for trying to activate an association has been reached.

Data Source

RNC_RXI

Source Field

pmNoOfMaxTrialsForAssocActivReached

Source Section

Mtp3bSpAnsi

pmNoOfMaxTrialsForAssocEstabReached

The number of times that the max limit for trying to establish an association has been reached.

Data Source

RNC_RXI

Source Field

pmNoOfMaxTrialsForAssocEstabReached

Source Section

Mtp3bSpAnsi

pmNoOfSctpAssociationRestart

The total number of SCTP association restarts.

Data Source

RNC_RXI

Source Field

pmNoOfSctpAssociationRestart

Source Section

Mtp3bSpItu,Mtp3bSpAnsi

pmNoOfSctpBufOverflow

The total number of SCTP stop sending data.

Data Source

RNC_RXI

Source Field

pmNoOfSctpBufOverflow

Source Section

Mtp3bSpItu,Mtp3bSpAnsi

pmNoOfSctpCommunicationErr

The total number of SCTP communication error.

Data Source

RNC_RXI

Source Field

pmNoOfSctpCommunicationErr

Source Section

Mtp3bSpItu,Mtp3bSpAnsi

pmNoOfSctpNetworkStatusChange

The total number of SCTP network status changes.

Data Source

RNC_RXI

Source Field

pmNoOfSctpNetworkStatusChange

Source Section

Mtp3bSpItu,Mtp3bSpAnsi

pmNoOfSctpResumeSending

The total number of SCTP resume sending data.

Data Source

RNC_RXI

Source Field

pmNoOfSctpResumeSending

Source Section

Mtp3bSpItu,Mtp3bSpAnsi

pmNoOfSctpSendFailure

The total number of SCTP send failure.

Data Source

RNC_RXI

Source Field

pmNoOfSctpSendFailure

Source Section

Mtp3bSpItu,Mtp3bSpAnsi

pmNoOfSLTAFirstTimeOutRec

The total number of received Signalling Link Test Acknowledge (SLTA) messages for first time out check.

Data Source

RNC_RXI

Source Field

pmNoOfSLTAFirstTimeOutRec

Source Section

Mtp3bSpItu,Mtp3bSpAnsi

pmNoOfSLTASecondTimeOutRec

The total number of received Signalling Link Test Acknowledge (SLTA) messages for second time out check.

Data Source

RNC_RXI

Source Field

pmNoOfSLTASecondTimeOutRec

Source Section

Mtp3bSpItu,Mtp3bSpAnsi

pmNoOfSuccessAssocAbort

The number of successful abortions of signalling associations.

Data Source

RNC_RXI

Source Field

pmNoOfSuccessAssocAbort

Source Section

Mtp3bSpAnsi

pmNoOfSuccessAssocEstablish

The total number of successful association establishments.

Data Source

RNC_RXI

Source Field

pmNoOfSuccessAssocEstablish

Source Section

Mtp3bSpItu,Mtp3bSpAnsi

pmNoOfTimerT21WasStarted

The total number of times the timer T21 was started.

Data Source

RNC_RXI

Source Field

pmNoOfTimerT21WasStarted

Source Section

Mtp3bSpItu,Mtp3bSpAnsi

pmNoOfTRARec

The total number of Recieved TRA messages.

Data Source

RNC_RXI

Source Field

pmNoOfTRARec

Source Section

Mtp3bSpItu,Mtp3bSpAnsi

pmNoOfTRASent

The total number of sent TRA messages.

Data Source

RNC_RXI

Source Field

pmNoOfTRASent

Source Section

Mtp3bSpItu,Mtp3bSpAnsi

pmNoOfUnsuccessAssocEstablish

The total number of unsuccessful association establishments.

Data Source

RNC_RXI

Source Field

pmNoOfUnsuccessAssocEstablish

Source Section

Mtp3bSpItu,Mtp3bSpAnsi

pmNoOfUnsuccessAssocShutDown

(Retired on Utan P6)The number of unsuccessful shutdowns of signalling associations.

Data Source

RNC_RXI

Source Field

pmNoOfUnsuccessAssocShutDown

Source Section

Mtp3bSpItu

pmNoOfUnsuccessForcedRerouting

The total number of unsuccessfully performed forced reroutings.

Data Source

RNC_RXI

Source Field

pmNoOfUnsuccessForcedRerouting

Source Section

Mtp3bSpItu,Mtp3bSpAnsi

pmNoOfUPMsgDiscardedDueToRoutingErr

The total number of user part messages (MTP_Transfer_Req) discarded due to routing error.

Data Source

RNC_RXI

Source Field

pmNoOfUPMsgDiscardedDueToRoutingErr

Source Section

Mtp3bSpItu,Mtp3bSpAnsi

Mtp3bSrs_NodeB Primitive Calculations

The following is a list of primitive calculations for the Mtp3bSrs_NodeB entity.

GRAPHmultiLineSeparator

Special Control Field for Multi-Line Graphs

Calculation

```
""
```

NUMDAYS

of days in Report

Calculation

```
DAYSINREPORT()
```

NUMHOURS

of hours in Summation Data

Calculation

Mtp3bSrs_NodeB Peg Counts

The following is a list of peg counts for the Mtp3bSrs_NodeB entity.

pmNoOfDiscardedMsgFromBroadToNarrow

The total number of messages discarded from broadband to narrowband.

Data Source

NodeB_RXI

Source Field

pmNoOfDiscardedMsgFromBroadToNarrow

Source Section

Mtp3bSrs

pmNoOfSecsAccRouteSetUnavailable

Number of seconds of route set unavailability accumulated during 30 minutes

Data Source

NodeB_RXI

Source Field

pmNoOfSecsAccRouteSetUnavailable

Source Section

Mtp3bSrs

Mtp3bSrs_RNC Primitive Calculations

The following is a list of primitive calculations for the Mtp3bSrs_RNC entity.

GRAPHmultiLineSeparator

Special Control Field for Multi-Line Graphs

Calculation

```
""
```

NUMDAYS

of days in Report

Calculation

```
DAYSINREPORT()
```

NUMHOURS

of hours in Summation Data

Calculation

Mtp3bSrs_RNC Peg Counts

The following is a list of peg counts for the Mtp3bSrs_RNC entity.

pmNoOfDiscardedMsgFromBroadToNarrow

The total number of messages discarded from broadband to narrowband.

Data Source

RNC_RXI

Source Field

pmNoOfDiscardedMsgFromBroadToNarrow

Source Section

Mtp3bSrs

pmNoOfSecsAccRouteSetUnavailable

Number of seconds of route set unavailability accumulated during 30 minutes

Data Source

RNC_RXI

Source Field

pmNoOfSecsAccRouteSetUnavailable

Source Section

Mtp3bSrs

NbapCommon Primitive Calculations

The following is a list of primitive calculations for the NbapCommon entity.

GRAPHmultiLineSeparator

Special Control Field for Multi-Line Graphs

Calculation

```
""
```

LocalName

LubLink Name

Calculation

```
LocalKey
```

NUMDAYS

of days in Report

Calculation

```
DAYSINREPORT()
```

NUMHOURS

of hours in Summation Data

Calculation

NbapCommon Peg Counts

The following is a list of peg counts for the NbapCommon entity.

activeUniSaalTpRef

Reference to the UniSaalTp Managed Object that represents the UNI SAAL termination point for the active MP processor.

Data Source

Bulk CM

Source Field

es:activeUniSaalTpRef

Source Section

NbapCommon

administrativeState

The administrative state of the signalling link. { string, Default= LOCKED }

Data Source

Bulk CM

Source Section

NbapCommon

availabilityStatus

The availability status of the NBAP common signalling bearer. { long, Range = 0..2047, Default=0, ReadOnly, NonPersistent, }

Data Source

Bulk CM

Source Section

NbapCommon

l2EstablishReqRetryT

Time between successive attempts to establish layer 2 assured mode communication. { long, Range = 1..150, Default=5 }

Data Source

Bulk CM

Source Section

NbapCommon

operationalState

The operational state of the NBAP common signalling bearer. { string, Default= ENABLED, ReadOnly, NonPersistent, }

Data Source

Bulk CM

Source Section

NbapCommon

PERLENSEC

Period Length

Data Source

RNC

Source Field

PERLENSEC

Source Section

NbapCommon _WMGeneral

PERLENSEC_K

Period length in seconds aggregation summation in time domain and aggregation maximum between Network Elements.

Data Source

NodeB_RNC

Source Field

PERLENSEC

Source Section

NbapCommon _WMGeneral

pmNoOfDiscardedMsg

(Retired in Utran P6)The number of discarded messages (Changed in UTRAN P6 from MO NbapCommon to MO Iub)

Data Source

NodeB

Source Field

pmNoOfDiscardedMsg

Source Section

NbapCommon

pmNoOfDiscardedNbapMessages

Number of NBAP: Radio Link Setup Messages reject by Admission Control due to UNI-SAAL congestion

Data Source

RNC

Source Field

pmNoOfDiscardedNbapMessages

Source Section

NbapCommon

RNC_RELEASE

Release

Data Source

RNC

Source Section

NbapCommon

standbyUniSaalTpRef

Reference to the UniSaalTp Managed Object that represents the UNI SAAL termination point for the standby MP processor.

Data Source

Bulk CM

Source Field

es:standbyUniSaalTpRef

Source Section

NbapCommon

userLabel

Provides the possibility to put a user-friendly label on the MO instance. The value is not used by the RNC. { string, LengthRange = 0..128, Default= "" }

Data Source

Bulk CM

Source Section

NbapCommon

NbapDedicated Primitive Calculations

The following is a list of primitive calculations for the NbapDedicated entity.

GRAPHmultiLineSeparator

Special Control Field for Multi-Line Graphs

Calculation

""

NUMDAYS

of days in Report

Calculation

```
DAYSINREPORT()
```

NUMHOURS

of hours in Summation Data

NbapDedicated Peg Counts

The following is a list of peg counts for the NbapDedicated entity.

activeUniSaalTpRef

Reference to the UniSaalTp Managed Object that represents the active UNI SAAL termination point.

Data Source

Bulk CM

Source Field

activeUniSaalTpRef

Source Section

NbapDedicated

administrativeState

The administrative state of the signaling link.

Data Source

Bulk CM

Source Field

administrativeState

Source Section

NbapDedicated

l2EstablishReqRetryT

Time between successive attempts to establish layer 2 assured mode communication. UtranP6:Deprecated: This attribute is currently not used by the system. Changing it has no effect.

Data Source

Bulk CM

Source Field

l2EstablishReqRetryT

Source Section

NbapDedicated

PERLENSEC

Period Length

Data Source

Bulk CM

Source Field

PERLENSEC

Source Section

NbapDedicated_RNC_WMGeneral

PERLENSEC_K

Period length in seconds aggregation summation in time domain and aggregation maximum between Network Elements.

Data Source

Bulk CM

Source Field

PERLENSEC

Source Section

NbapDedicated_RNC_WMGeneral

standbyUniSaalTpRef

Reference to the UniSaalTp Managed Object that represents the stand-by UNI SAAL termination point.

Data Source

Bulk CM

Source Field

standbyUniSaalTpRef

Source Section

NbapDedicated

userLabel

Provides the possibility to put a user-friendly label on the MO instance. The value is not used by the RNC.

Data Source

Bulk CM

Source Field

userLabel

Source Section

NbapDedicated

NniSaalTp_NodeB Primitive Calculations

The following is a list of primitive calculations for the NniSaalTp_NodeB entity.

GRAPHmultiLineSeparator

Special Control Field for Multi-Line Graphs

Calculation

```
""
```

NUMDAYS

of days in Report

Calculation

```
DAYSINREPORT()
```

NUMHOURS

of hours in Summation Data

Calculation

NniSaalTp_NodeB Peg Counts

The following is a list of peg counts for the NniSaalTp_NodeB entity.

NodeB_RELEASE

Release

Data Source

NodeB_RNC_RXI

Source Section

NniSaalTp_NodeB

PERLENSEC

Period Length

Data Source

NodeB_RNC_RXI

Source Field

perlensec

Source Section

NniSaalTp_NodeB_WMGeneral

PERLENSEC_K

Period length in seconds aggregation summation in time domain and aggregation maximum between Network Elements.

Data Source

NodeB_RNC_RXI

Source Field

perlensec

Source Section

NniSaalTp_NodeB_WMGeneral

pmLinkInServiceTime

The Acc time in sec the signaling link has been in service

Data Source

NodeB_RNC_RXI

Source Field

pmLinkInServiceTime

Source Section

NniSaalTp_NodeB

pmNoOfAlignmentFailures

Number of alignment or proving failures.

Data Source

NodeB_RNC_RXI

Source Field

pmNoOfAlignmentFailures

Source Section

NniSaalTp_NodeB

pmNoOfAllSLFailures

Number of all Signaling link failures.

Data Source

NodeB_RNC_RXI

Source Field

pmNoOfAllSLFailures

Source Section

NniSaalTp_NodeB

pmNoOfLocalCongestions

Number of loca cong.This count is incr when sum of SAAL send&retran buff are filled

Data Source

NodeB_RNC_RXI

Source Field

pmNoOfLocalCongestions

Source Section

NniSaalTp_NodeB

pmNoOfNoResponses

Number of no responses detected the last 30 minutes.

Data Source

NodeB_RNC_RXI

Source Field

pmNoOfNoResponses

Source Section

NniSaalTp_NodeB

pmNoOfOtherErrors

Number of other list element errors.

Data Source

NodeB_RNC_RXI

Source Field

pmNoOfOtherErrors

Source Section

NniSaalTp_NodeB

pmNoOfProtocolErrors

Number of unsolicited or inappropriate PDUs.

Data Source

NodeB_RNC_RXI

Source Field

pmNoOfProtocolErrors

Source Section

NniSaalTp_NodeB

pmNoOfReceivedSDUs

Number of successfully received SDUs.

Data Source

NodeB_RNC_RXI

Source Field

pmNoOfReceivedSDUs

Source Section

NniSaalTp_NodeB

pmNoOfRemoteCongestions

Number remote cong. This counter increased when remote side gives SAAL no credit.

Data Source

NodeB_RNC_RXI

Source Field

pmNoOfRemoteCongestions

Source Section

NniSaalTp_NodeB

pmNoOfSentSDUs

Number of successfully sent SDUs.

Data Source

NodeB_RNC_RXI

Source Field

pmNoOfSentSDUs

Source Section

NniSaalTp_NodeB

pmNoOfSequenceDataLosses

Number of data sequences loss.

Data Source

NodeB_RNC_RXI

Source Field

pmNoOfSequenceDataLosses

Source Section

NniSaalTp_NodeB

pmNoOfUnsuccReTransmissions

Number of unsuccessful retransmissions.

Data Source

NodeB_RNC_RXI

Source Field

pmNoOfUnsuccReTransmissions

Source Section

NniSaalTp_NodeB

NniSaalTp_RNC Primitive Calculations

The following is a list of primitive calculations for the NniSaalTp_RNC entity.

GRAPHmultiLineSeparator

Special Control Field for Multi-Line Graphs

Calculation

""

Updated: 2009-07-22

NUMDAYS

of days in Report

Calculation

```
DAYSINREPORT()
```

NUMHOURS

of hours in Summation Data

Calculation

NniSaalTp_RNC Peg Counts

The following is a list of peg counts for the NniSaalTp_RNC entity.

PERLENSEC

Period Length

Data Source

NodeB_RNC_RXI

Source Field

perlensec

Source Section

NniSaalTp_RNC_WMGeneral

PERLENSEC_K

Period length in seconds aggregation summation in time domain and aggregation maximum between Network Elements.

Data Source

NodeB_RNC_RXI

Source Field

perlensec

Source Section

NniSaalTp_RNC_WMGeneral

pmLinkInServiceTime

The Acc time (in seconds) the signaling link has been in service

Data Source

NodeB_RNC_RXI

Source Field

pmLinkInServiceTime

Source Section

NniSaalTp_RNC

pmNoOfAlignmentFailures

Number of alignment or proving failures.

Data Source

NodeB_RNC_RXI

Source Field

pmNoOfAlignmentFailures

Source Section

NniSaalTp_RNC

pmNoOfAllSLFailures

Number of all Signaling link failures.

Data Source

NodeB_RNC_RXI

Source Field

pmNoOfAllSLFailures

Source Section

NniSaalTp_RNC

pmNoOfLocalCongestions

Number of loca cong.This count is incr when sum of SAAL send&retran buff are filled

Data Source

NodeB_RNC_RXI

Source Field

pmNoOfLocalCongestions

Source Section

NniSaalTp_RNC

pmNoOfNoResponses

Number of no responses detected the last 30 minutes.

Data Source

NodeB_RNC_RXI

Source Field

pmNoOfNoResponses

Source Section

NniSaalTp_RNC

pmNoOfOtherErrors

Number of other list element errors.

Data Source

NodeB_RNC_RXI

Source Field

pmNoOfOtherErrors

Source Section

NniSaalTp_RNC

pmNoOfProtocolErrors

Number of unsolicited or inappropriate PDUs.

Data Source

NodeB_RNC_RXI

Source Field

pmNoOfProtocolErrors

Source Section

NniSaalTp_RNC

pmNoOfReceivedSDUs

Number of successfully received SDUs.

Data Source

NodeB_RNC_RXI

Source Field

pmNoOfReceivedSDUs

Source Section

NniSaalTp_RNC

pmNoOfRemoteCongestions

Number remote cong. This counter increased when remote side gives SAAL no credit.

Data Source

NodeB_RNC_RXI

Source Field

pmNoOfRemoteCongestions

Source Section

NniSaalTp_RNC

pmNoOfSentSDUs

Number of successfully sent SDUs.

Data Source

NodeB_RNC_RXI

Source Field

pmNoOfSentSDUs

Source Section

NniSaalTp_RNC

pmNoOfSequenceDataLosses

Number of data sequences loss.

Data Source

NodeB_RNC_RXI

Source Field

pmNoOfSequenceDataLosses

Source Section

NniSaalTp_RNC

pmNoOfUnsuccReTransmissions

Number of unsuccessful retransmissions.

Data Source

NodeB_RNC_RXI

Source Field

pmNoOfUnsuccReTransmissions

Source Section

NniSaalTp_RNC

RNC_RELEASE

Release

Data Source

NodeB_RNC_RXI

Source Section

NniSaalTp_RNC

NodeB Primitive Calculations

The following is a list of primitive calculations for the NodeB entity.

GRAPHmultiLineSeparator

Special Control Field for Multi-Line Graphs

Calculation

```
""
```

NUMDAYS

of days in Report

Calculation

```
DAYSINREPORT()
```

NUMHOURS

of hours in Summation Data

Calculation

Vpc_ErrBlock%_Received

Received cell error rate for NodeB. Percentage of forwarded blocks with errors to total received Cells in the virtual path. A healthy value is at most 4*10^-6.

Calculation

```
100.0 * (AGGR(TransportNetw_NodeB.AtmPort_NodeB.VplTp_NodeB.VpcTp_NodeB,
pmFwErrBlocks) /
(AGGR(TransportNetw_NodeB.AtmPort_NodeB.VplTp_NodeB.VpcTp_NodeB.VclTp_Node
B, pmReceivedAtmCells)))
```

NodeB Peg Counts

The following is a list of peg counts for the NodeB entity.

accuracy

Last reported value of the phase measurement accuracy. { long, Range = 0..40960000, Default=40960000, ReadOnly, NonPersistent, NoNotification}

Data Source

Bulk CM

Source Section

NodeSynch

controlFrameT

System constant. { long, Default=200 }

Data Source

Bulk CM

Source Section

NodeSynch

nodeBFunctionIubLink

Fully Distinguished Name of the Iub link object associcated with this Node B.

Data Source

Bulk CM

Source Field

un:nodeBFunctionIubLink

Source Section

NodeBFunction

noOfRetries

System constant. { long, Default=3 }

Data Source

Bulk CM

Source Section

NodeSynch

noOfSamples

Number of samples per measurement. { long, Range = 1..10, Default=5 }

Data Source

Bulk CM

Source Section

NodeSynch

phaseDiffThreshold

Threshold for phase measurement. Used for alarm generation in MO NodeSynchTp. { long, Range = 0..10, Default=2 }

Data Source

Bulk CM

Source Section

NodeSynch

phaseMeasurement

0..40960000 { long, Default=40960000, ReadOnly, NonPersistent, NoNotification}

Data Source

Bulk CM

Source Section

NodeSynch

pmCapacityNodeBDlCe_00

The distribution of the RBS DL Channel Element utilization (for all DL baseband pools), as percentages of the corresponding license limit. Range: License limit

Data Source

NodeB

Source Field

pmCapacityNodeBDlCe

Source Section

NodeBFunction

pmCapacityNodeBDlCe_01

The distribution of the RBS DL Channel Element utilization (for all DL baseband pools), as percentages of the corresponding license limit. Number of sampled value in range 0..20%

Data Source

NodeB

Source Field

pmCapacityNodeBDlCe

Source Section

NodeBFunction

pmCapacityNodeBDlCe_02

The distribution of the RBS DL Channel Element utilization (for all DL baseband pools), as percentages of the corresponding license limit. Number of sampled value in range 20..40%

Data Source

NodeB

Source Field

pmCapacityNodeBDlCe

Source Section

NodeBFunction

pmCapacityNodeBDlCe_03

The distribution of the RBS DL Channel Element utilization (for all DL baseband pools), as percentages of the corresponding license limit. Number of sampled value in range 40..50%

Data Source

NodeB

Source Field

pmCapacityNodeBDlCe

Source Section

NodeBFunction

pmCapacityNodeBDlCe_04

The distribution of the RBS DL Channel Element utilization (for all DL baseband pools), as percentages of the corresponding license limit. Number of sampled value in range 50..60%

Data Source

NodeB

Source Field

pmCapacityNodeBDlCe

Source Section

NodeBFunction

pmCapacityNodeBDlCe_05

The distribution of the RBS DL Channel Element utilization (for all DL baseband pools), as percentages of the corresponding license limit. Number of sampled value in range 60..70%

Data Source

NodeB

Source Field

pmCapacityNodeBDlCe

Source Section

NodeBFunction

pmCapacityNodeBDlCe_06

The distribution of the RBS DL Channel Element utilization (for all DL baseband pools), as percentages of the corresponding license limit. Number of sampled value in range 70..80%

Data Source

NodeB

Source Field

pmCapacityNodeBDlCe

Source Section

NodeBFunction

pmCapacityNodeBDlCe_07

The distribution of the RBS DL Channel Element utilization (for all DL baseband pools), as percentages of the corresponding license limit. Number of sampled value in range 80..85%

Data Source

NodeB

Source Field

pmCapacityNodeBDlCe

Source Section

NodeBFunction

pmCapacityNodeBDlCe_08

The distribution of the RBS DL Channel Element utilization (for all DL baseband pools), as percentages of the corresponding license limit. Number of sampled value in range 85..90%

Data Source

NodeB

Source Field

pmCapacityNodeBDlCe

Source Section

NodeBFunction

pmCapacityNodeBDlCe_09

The distribution of the RBS DL Channel Element utilization (for all DL baseband pools), as percentages of the corresponding license limit. Number of sampled value in range 90..95%

Data Source

NodeB

Source Field

pmCapacityNodeBDlCe

Source Section

NodeBFunction

pmCapacityNodeBDlCe_10

The distribution of the RBS DL Channel Element utilization (for all DL baseband pools), as percentages of the corresponding license limit. Number of sampled value in range >=95%

Data Source

NodeB

Source Field

pmCapacityNodeBDlCe

Source Section

NodeBFunction

pmCapacityNodeBUlCe_00

The distribution of the RBS UL Channel Element utilization (for all UL baseband pools), as percentages of the corresponding license limit. Range: License limit

Data Source

NodeB

Source Field

pmCapacityNodeBUlCe

Source Section

NodeBFunction

pmCapacityNodeBUlCe_01

The distribution of the RBS UL Channel Element utilization (for all UL baseband pools), as percentages of the corresponding license limit. Number of sampled value in range 0..20%

Data Source

NodeB

Source Field

pmCapacityNodeBUlCe

Source Section

NodeBFunction

pmCapacityNodeBUlCe_02

The distribution of the RBS UL Channel Element utilization (for all UL baseband pools), as percentages of the corresponding license limit. Number of sampled value in range 20..40%

Data Source

NodeB

Source Field

pmCapacityNodeBUlCe

Source Section

NodeBFunction

pmCapacityNodeBUlCe_03

The distribution of the RBS UL Channel Element utilization (for all UL baseband pools), as percentages of the corresponding license limit. Number of sampled value in range 40..50%

Data Source

NodeB

Source Field

pmCapacityNodeBUlCe

Source Section

NodeBFunction

pmCapacityNodeBUlCe_04

The distribution of the RBS UL Channel Element utilization (for all UL baseband pools), as percentages of the corresponding license limit. Number of sampled value in range 50..60%

Data Source

NodeB

Source Field

pmCapacityNodeBUlCe

Source Section

NodeBFunction

pmCapacityNodeBUlCe_05

The distribution of the RBS UL Channel Element utilization (for all UL baseband pools), as percentages of the corresponding license limit. Number of sampled value in range 60..70%

Data Source

NodeB

Source Field

pmCapacityNodeBUlCe

Source Section

NodeBFunction

pmCapacityNodeBUlCe_06

The distribution of the RBS UL Channel Element utilization (for all UL baseband pools), as percentages of the corresponding license limit. Number of sampled value in range 70..80%

Data Source

NodeB

Source Field

pmCapacityNodeBUlCe

Source Section

NodeBFunction

pmCapacityNodeBUlCe_07

The distribution of the RBS UL Channel Element utilization (for all UL baseband pools), as percentages of the corresponding license limit. Number of sampled value in range 80..85%

Data Source

NodeB

Source Field

pmCapacityNodeBUlCe

Source Section

NodeBFunction

pmCapacityNodeBUlCe_08

The distribution of the RBS UL Channel Element utilization (for all UL baseband pools), as percentages of the corresponding license limit. Number of sampled value in range 85..90%

Data Source

NodeB

Source Field

pmCapacityNodeBUlCe

Source Section

NodeBFunction

pmCapacityNodeBUlCe_09

The distribution of the RBS UL Channel Element utilization (for all UL baseband pools), as percentages of the corresponding license limit. Number of sampled value in range 90..95%

Data Source

NodeB

Source Field

pmCapacityNodeBUlCe

Source Section

NodeBFunction

pmCapacityNodeBUlCe_10

The distribution of the RBS UL Channel Element utilization (for all UL baseband pools), as percentages of the corresponding license limit. Number of sampled value in range >=95%

Data Source

NodeB

Source Field

pmCapacityNodeBUlCe

Source Section

NodeBFunction

pmNoOfDscMsg

The number of discarded messages

Data Source

NodeB

Source Field

pmNoOfDiscardedMsg

Source Section

Iub

pmTotTmIubLnCongUl

The time in seconds that the Iub link is congested for the NBAP Common part of the control plane in the uplink direction.

Data Source

NodeB

Source Field

pmTotalTimeIubLinkCongestedUl

Source Section

Iub

qEval

System constant. { long, Default=5 }

Data Source

Bulk CM

Source Section

NodeSynch

reservedBy

Sequence of NodeSynchTp MO references. Indicates all of the NodeSynchTp that are associated with this NodeSynch entity. { sequence<NodeSynchTp,2>, Default = empty, Default=, ReadOnly, }

Data Source

Bulk CM

Source Section

NodeSynch

supervisionIntervalT

Time between the periodically phase measurements of the RBS. { long, Range = 0..1440, Default=15 }

Data Source

Bulk CM

Source Section

NodeSynch

timeStamp

Time stamp for the last reported value of the phase measurement and associated accuracy. { string, LengthRange = 0,19, Default= "", ReadOnly, NonPersistent, NoNotification}

Data Source

Bulk CM

Source Section

NodeSynch

userLabel

A user-friendly (and user assigned) name of the associated object.

Data Source

Bulk CM

Source Field

un:userLabel

Source Section

NodeBFunction

userLabel_CM

Provides the possibility to put a user-friendly label on the MO instance. The value is not used by the RNC. { string, LengthRange = 0..128, Default= "" }

Data Source

Bulk CM

Source Section

NodeSynch

NodeSynchTp Primitive Calculations

The following is a list of primitive calculations for the NodeSynchTp entity.

GRAPHmultiLineSeparator

Special Control Field for Multi-Line Graphs

Calculation

```
""
```

NUMDAYS

of days in Report

Calculation

```
DAYSINREPORT()
```

NUMHOURS

of hours in Summation Data

NodeSynchTp Peg Counts

The following is a list of peg counts for the NodeSynchTp entity.

aal0TpRefs_1

References to the AAL0 TP Managed Objects that represents the AAL0 Termination points to be used by the Node Synchronization signaling. Up to 2 termination points may be specified, one for each TimDevice board in RBS. Both of these Aal0TpVccTp instances shall in turn reference the same PlugInUnit MO, that contains the TimDevice MO used for the NodeSynch function in the RNC. The froId for this TimDevice shall be fetched.

Data Source

Bulk CM

Source Field

aal0TpRefs

Source Section

NodeSynchTp

aal0TpRefs_2

References to the AAL0 TP Managed Objects that represents the AAL0 Termination points to be used by the Node Synchronization signaling. Up to 2 termination points may be specified, one for each TimDevice board in RBS. Both of these Aal0TpVccTp instances shall in turn reference the same PlugInUnit MO, that contains the TimDevice MO used for the NodeSynch function in the RNC. The froId for this TimDevice shall be fetched.

Data Source

Bulk CM

Source Field

aal0TpRefs

Source Section

NodeSynchTp

administrativeState

The administrative state of the node synch termination point.

Data Source

Bulk CM

Source Field

administrativeState

Source Section

NodeSynchTp

nodeSynchRef

Reference to the NodeSynch MO, containing the algorithm parameters to be used for this Node Synch Tp. Set by the system to the NodeSynch MO instance contained under the same Iub parent.

Data Source

Bulk CM

Source Field

nodeSynchRef

Source Section

NodeSynchTp

PERLENSEC

Period Length

Data Source

Bulk CM

Source Field

PERLENSEC

Source Section

NodeSynchTP_RNC_WMGeneral

PERLENSEC_K

Period length in seconds aggregation summation in time domain and aggregation maximum between Network Elements.

Data Source

Bulk CM

Source Field

PERLENSEC

Source Section

NodeSynchTP_RNC_WMGeneral

timDeviceRef

Reference to the TimDevice Managed Object that are used for the Node Synchronization. This reference is set by the system, by looking at the PlugInUnit MO that both of the Aal0TpVccTp instances (of attribute aal0TpRefs) references. The TimDevice MO reference is the one contained by the PlugInUnit MO instance.

Data Source

Bulk CM

Source Field

timDeviceRef

Source Section

NodeSynchTp

userLabel

Provides the possibility to put a user-friendly label on the MO instance. The value is not used by the RNC.

Data Source

Bulk CM

Source Field

userLabel

Source Section

NodeSynchTp

NrService Primitive Calculations

The following is a list of primitive calculations for the NrService entity.

GRAPHmultiLineSeparator

Special Control Field for Multi-Line Graphs

Calculation

```
""
```

NUMDAYS

of days in Report

Calculation

```
DAYSINREPORT()
```

NUMHOURS

of hours in Summation Data

Calculation

p_Seizures_Sucess_Rate

Percentege of Seizures which are sucessful

Calculation

```
100.0 * vsum( pmTotalSeizures, -1 * pmUnsuccSeizures ) / pmTotalSeizures
```

NrService Peg Counts

The following is a list of peg counts for the NrService entity.

PERLENSEC

Period length in seconds

Data Source

RNC_RXI

Source Field

PERLENSEC

Source Section

NrService_Gen

pmForcedRelease

Total Number of forced device releases for ex due to spontaneous device fault

Data Source

RNC_RXI

Source Field

pmForcedRelease

Source Section

NrService

pmNormalRelease

Total Number of normal device releases

Data Source

RNC_RXI

Source Field

pmNormalRelease

Source Section

NrService

pmTotalSeizures

The total number of seizure attempt of devices from this device Service.

Data Source

RNC_RXI

Source Field

pmTotalSeizures

Source Section

NrService

pmUnsuccSeizures

The total number of failed seizure attempts due to congestion.

Data Source

RNC_RXI

Source Field

pmUnsuccSeizures

Source Section

NrService

RNC_RELEASE

Release

Data Source

RNC_RXI

Source Field

RNC_RELEASE

Source Section

NrService_Gen

Os155PhyPathTrm_NodeB Primitive Calculations

The following is a list of primitive calculations for the Os155PhyPathTrm_NodeB entity.

GRAPHmultiLineSeparator

Special Control Field for Multi-Line Graphs

Calculation

```
""
```

NUMDAYS

of days in Report

Calculation

```
DAYSINREPORT()
```

NUMHOURS

of hours in Summation Data

Calculation

Phy_Errored_Ratio_Multiplexer_NodeB

In standards (G.826) Number of errored seconds for the Multiplexer Section (MS) Ratio

Calculation

```
pmMsEs / PERLENSEC
```

Os155PhyPathTrm_NodeB Peg Counts

The following is a list of peg counts for the Os155PhyPathTrm_NodeB entity.

NodeB_RELEASE

Release

PERLENSEC

Period Length

Source Field

PERLENSEC

Source Section

Os155PhyPathTrm_NodeB_WMGeneral

PERLENSEC_K

Period length in seconds aggregation summation in time domain and aggregation maximum between Network Elements.

Data Source

NodeB_RNC_RXI

Source Field

PERLENSEC

Source Section

Os155PhyPathTrm_NodeB_WMGeneral

pmMsBbe

Transmission Background Block Errors (BBE).

Data Source

NodeB_RXI

Source Field

pmMsBbe

Source Section

Os155SpiTtp

pmMsEs

Number of errored seconds for the Multiplexer Section (MS).

Source Field

pmMsEs

Source Section

Os155SpiTtp,Os155PhysPathTerm

pmMsSes

Number of severly errored seconds for the Multiplexer Section (MS).

Source Field

pmMsSes

Source Section

Os155SpiTtp,Os155PhysPathTerm

pmMsUas

Transmission Unavailable Seconds (UAS). The accumulated unavailable time in seconds during the interval. Unavailable time starts when 10 consecutive SES are detected (them being part of the unavailable time) and ends when 10 consecutive non-SES are detec

Data Source

NodeB_RXI

Source Field

pmMsUas

Source Section

Os155SpiTtp

pmVc4Es

Number of errored seconds for the Virtual Container 4 (VC4).

Source Field

pmVc4Es

Source Section

Os155SpiTtp,Os155PhysPathTerm

pmVc4Ses

Number of severly errored seconds for the Virtual Container 4 (VC4).

Source Field

pmVc4Ses

Source Section

Os155SpiTtp,Os155PhysPathTerm

Os155PhyPathTrm_RNC Primitive Calculations

The following is a list of primitive calculations for the Os155PhyPathTrm_RNC entity.

GRAPHmultiLineSeparator

Special Control Field for Multi-Line Graphs

Calculation

```
""
```

NUMDAYS

of days in Report

Calculation

```
DAYSINREPORT()
```

NUMHOURS

of hours in Summation Data

Calculation

Phy_Errored_Ratio_Multiplexer_RNC

In standards (G.826) Number of errored seconds for the Multiplexer Section (MS) Ratio

Calculation

```
pmMsEs / PERLENSEC
```

Os155PhyPathTrm_RNC Peg Counts

The following is a list of peg counts for the Os155PhyPathTrm_RNC entity.

PERLENSEC

Period Length

Source Field

PERLENSEC

Source Section

Os155PhyPathTrm_RNC_WMGeneral

PERLENSEC_K

Period length in seconds aggregation summation in time domain and aggregation maximum between Network Elements.

Data Source

NodeB_RNC_RXI

Source Field

PERLENSEC

Source Section

Os155PhyPathTrm_RNC_WMGeneral

pmMsBbe

Transmission Background Block Errors (BBE).

Data Source

RNC_RXI

Source Field

pmMsBbe

Source Section

Os155SpiTtp

pmMsEs

Number of errored seconds for the Multiplexer Section (MS).

pmMsSes

Number of severly errored seconds for the Multiplexer Section (MS).

pmMsUas

Transmission Unavailable Seconds (UAS). The accumulated unavailable time in seconds during the interval. Unavailable time starts when 10 consecutive SES are detected (them being part of the unavailable time) and ends when 10 consecutive non-SES are detec

Data Source

RNC_RXI

Source Field

pmMsUas

Source Section

Os155SpiTtp

RNC_RELEASE

Release

Ospf_NodeB Primitive Calculations

The following is a list of primitive calculations for the Ospf_NodeB entity.

GRAPHmultiLineSeparator

Special Control Field for Multi-Line Graphs

Calculation

```
""
```

NUMDAYS

of days in Report

Calculation

```
DAYSINREPORT()
```

NUMHOURS

of hours in Summation Data

Calculation

Ospf_NodeB Peg Counts

The following is a list of peg counts for the Ospf_NodeB entity.

NodeB_RELEASE

Release

Data Source

NodeB_RNC_RXI

Source Section

Ospf_NodeB

PERLENSEC

Period Length

Data Source

NodeB_RNC_RXI

Source Field

perlensec

Source Section

Ospf_NodeB_WMGeneral

PERLENSEC_K

Period length in seconds aggregation summation in time domain and aggregation maximum between Network Elements.

Data Source

NodeB_RNC_RXI

Source Field

perlensec

Source Section

Ospf_NodeB_WMGeneral

pmNoOfOspfOriginateNewLsas

The Number of new link-state advertisements that have been originated

Data Source

NodeB_RNC_RXI

Source Field

pmNoOfOspfOriginateNewLsas

Source Section

Ospf_NodeB

pmNoOfOspfRxNewLsas

The Number of link-state advertisement received determined to be new instantiations

Data Source

NodeB_RNC_RXI

Source Field

pmNoOfOspfRxNewLsas

Source Section

Ospf_NodeB

Ospf_RNC Primitive Calculations

The following is a list of primitive calculations for the Ospf_RNC entity.

GRAPHmultiLineSeparator

Special Control Field for Multi-Line Graphs

Calculation

```
""
```

NUMDAYS

of days in Report

Calculation

```
DAYSINREPORT()
```

Updated: 2009-07-22

NUMHOURS

of hours in Summation Data

Calculation

Ospf_RNC Peg Counts

The following is a list of peg counts for the Ospf_RNC entity.

PERLENSEC

Period Length

Data Source

NodeB_RNC_RXI

Source Field

perlensec

Source Section

Ospf_RNC_WMGeneral

PERLENSEC_K

Period length in seconds aggregation summation in time domain and aggregation maximum between Network Elements.

Data Source

NodeB_RNC_RXI

Source Field

perlensec

Source Section

Ospf_RNC_WMGeneral

pmNoOfOspfOriginateNewLsas

The Number of new link-state advertisements that have been originated

Data Source

NodeB_RNC_RXI

Source Field

pmNoOfOspfOriginateNewLsas

Source Section

Ospf_RNC

pmNoOfOspfRxNewLsas

The Number of link-state advertisement received determined to be new instantiations

Data Source

NodeB_RNC_RXI

Source Field

pmNoOfOspfRxNewLsas

Source Section

Ospf_RNC

RNC_RELEASE

Release

Data Source

NodeB_RNC_RXI

Source Section

Ospf_RNC

OspfArea_NodeB Primitive Calculations

The following is a list of primitive calculations for the OspfArea_NodeB entity.

GRAPHmultiLineSeparator

Special Control Field for Multi-Line Graphs

Calculation

""

NUMDAYS

of days in Report

Calculation

```
DAYSINREPORT()
```

NUMHOURS

of hours in Summation Data

Calculation

OspfArea_NodeB Peg Counts

The following is a list of peg counts for the OspfArea_NodeB entity.

NodeB_RELEASE

Release

Data Source

NodeB_RNC_RXI

Source Section

OspfArea_NodeB

PERLENSEC

Period Length

Data Source

NodeB_RNC_RXI

Source Field

perlensec

Source Section

OspfArea_NodeB_WMGeneral

PERLENSEC_K

Period length in seconds aggregation summation in time domain and aggregation maximum between Network Elements.

Data Source

NodeB_RNC_RXI

Source Field

perlensec

Source Section

OspfArea_NodeB_WMGeneral

pmNoOfOspfSpfRuns

The Number of times that the intra-area route table been calc using linkstate db

Data Source

NodeB_RNC_RXI

Source Field

pmNoOfOspfSpfRuns

Source Section

OspfArea_NodeB

OspfArea_RNC Primitive Calculations

The following is a list of primitive calculations for the OspfArea_RNC entity.

GRAPHmultiLineSeparator

Special Control Field for Multi-Line Graphs

Calculation

```
""
```

NUMDAYS

of days in Report

Calculation

```
DAYSINREPORT()
```

NUMHOURS

of hours in Summation Data

Calculation

OspfArea_RNC Peg Counts

The following is a list of peg counts for the OspfArea_RNC entity.

PERLENSEC

Period Length

Data Source

NodeB_RNC_RXI

Source Field

perlensec

Source Section

OspfArea_RNC_WMGeneral

PERLENSEC_K

Period length in seconds aggregation summation in time domain and aggregation maximum between Network Elements.

Data Source

NodeB_RNC_RXI

Source Field

perlensec

Source Section

OspfArea_RNC_WMGeneral

pmNoOfOspfSpfRuns

The Number of times that the intra-area route table been calc using linkstate db

Data Source

NodeB_RNC_RXI

Source Field

pmNoOfOspfSpfRuns

Source Section

OspfArea_RNC

RNC_RELEASE

Release

Data Source

NodeB_RNC_RXI

Source Section

OspfArea_RNC

OspfInterface_NodeB Primitive Calculations

The following is a list of primitive calculations for the OspfInterface_NodeB entity.

GRAPHmultiLineSeparator

Special Control Field for Multi-Line Graphs

Calculation

```
""
```

NUMDAYS

of days in Report

Calculation

```
DAYSINREPORT()
```

NUMHOURS

of hours in Summation Data

Calculation

OspfInterface_NodeB Peg Counts

The following is a list of peg counts for the OspfInterface_NodeB entity.

NodeB_RELEASE

Release

Data Source

NodeB_RNC_RXI

Source Section

OspfInterface_NodeB

PERLENSEC

Period Length

Data Source

NodeB_RNC_RXI

Source Field

perlensec

Source Section

OspfInterface_NodeB_WMGeneral

PERLENSEC_K

Period length in seconds aggregation summation in time domain and aggregation maximum between Network Elements.

Data Source

NodeB_RNC_RXI

Source Field

perlensec

Source Section

OspfInterface_NodeB_WMGeneral

pmNoOfOspfIfEvents

Number times this OSPF interface has changed its state or an error has occurred.

Data Source

NodeB_RNC_RXI

Source Field

pmNoOfOspfIfEvents

Source Section

OspfInterface_NodeB

OspfInterface_RNC Primitive Calculations

The following is a list of primitive calculations for the OspfInterface_RNC entity.

GRAPHmultiLineSeparator

Special Control Field for Multi-Line Graphs

Calculation

```
""
```

NUMDAYS

of days in Report

Calculation

```
DAYSINREPORT()
```

NUMHOURS

of hours in Summation Data

Calculation

OspfInterface_RNC Peg Counts

The following is a list of peg counts for the OspfInterface_RNC entity.

PERLENSEC

Period Length

Data Source

NodeB_RNC_RXI

Source Field

perlensec

Source Section

OspfInterface_RNC_WMGeneral

PERLENSEC_K

Period length in seconds aggregation summation in time domain and aggregation maximum between Network Elements.

Data Source

NodeB_RNC_RXI

Source Field

perlensec

Source Section

OspfInterface_RNC_WMGeneral

pmNoOfOspfIfEvents

Number times this OSPF interface has changed its state, or an error has occurred.

Data Source

NodeB_RNC_RXI

Source Field

pmNoOfOspfIfEvents

Source Section

OspfInterface_RNC

RNC_RELEASE

Release

Data Source

NodeB_RNC_RXI

Source Section

OspfInterface_RNC

PacketDataRouter Primitive Calculations

The following is a list of primitive calculations for the PacketDataRouter entity.

GRAPHmultiLineSeparator

Special Control Field for Multi-Line Graphs

Calculation

```
""
```

NUMDAYS

of days in Report

Calculation

```
DAYSINREPORT()
```

NUMHOURS

of hours in Summation Data

Calculation

PacketDataRouter Peg Counts

The following is a list of peg counts for the PacketDataRouter entity.

administrativeState

The administrative state of the Packet Data Router. { string, Default= UNLOCKED }

Data Source

Bulk CM

Source Section

PacketDataRouter

availabilityStatus

The availability status of the Packet Data Router. { long, Range = 0..2047, Default=0, ReadOnly, NonPersistent, }

Data Source

Bulk CM

Source Section

PacketDataRouter

operationalState

The operational state of the Packet Data Router. { string, Default= ENABLED, ReadOnly, NonPersistent, }

Data Source

Bulk CM

Source Section

PacketDataRouter

pdrDeviceRef

Reference to the PdrDevice Managed Object that is used by the PacketDataRouter. { PdrDevice, Default= empty, ReadOnly, NoNotification}

Data Source

Bulk CM

Source Section

PacketDataRouter

PERLENSEC

Period Length

Data Source

NodeB_RNC_RXI

Source Field

perlensec

Source Section

PacketDataRouter_WMGeneral

PERLENSEC_K

Period length in seconds aggregation summation in time domain and aggregation maximum between Network Elements.

Data Source

NodeB_RNC

Source Field

perlensec

Source Section

PacketDataRouter_WMGeneral

pmNoFaultyIpPackets

Number of faulty packets.

Data Source

NodeB_RNC_RXI

Source Field

pmNoFaultyIpPackets

Source Section

PacketDataRouter

pmNoRoutedIpBytesDl

Number of routed user IP bytes in the downlink.

Data Source

NodeB_RNC_RXI

Source Field

pmNoRoutedIpBytesDl

Source Section

PacketDataRouter

pmNoRoutedIpBytesUl

Number of routed user IP bytes in the uplink.

Data Source

NodeB_RNC_RXI

Source Field

pmNoRoutedIpBytesUl

Source Section

PacketDataRouter

pmNoRoutedIpPacketsDl

Number of routed user IP packets in the downlink.

Data Source

NodeB_RNC_RXI

Source Field

pmNoRoutedIpPacketsDl

Source Section

PacketDataRouter

pmNoRoutedIpPacketsUl

Number of routed user IP packets in the uplink.

Data Source

NodeB_RNC_RXI

Source Field

pmNoRoutedIpPacketsUl

Source Section

PacketDataRouter

pmSamplesPacketDataRab

Number samples rec within ROP "Number of packet data RABs" for each Packet Data Router.

Data Source

NodeB_RNC_RXI

Source Field

pmSamplesPacketDataRab

Source Section

PacketDataRouter

pmSumPacketDataRab

Sum sample values rec for "Number of packet data RABs" (per Packet Data Router).

Data Source

NodeB_RNC_RXI

Source Field

pmSumPacketDataRab

Source Section

PacketDataRouter

RNC_RELEASE

Release

Data Source

NodeB_RNC_RXI

Source Section

PacketDataRouter

timeToLive

Time-to-live value assigned to uplink traffic IP header. { long, Range = 0..255, Default=20 }

Data Source

Bulk CM

Source Section

PacketDataRouter

userLabel

Provides the possibility to put a user-friendly label on the MO instance. The value is not used by the RNC. { string, LengthRange = 0..128, Default= "" }

Data Source

Bulk CM

Source Section

PacketDataRouter

PacketDataRouter_RNC Primitive Calculations

The following is a list of primitive calculations for the PacketDataRouter_RNC entity.

GRAPHmultiLineSeparator

Special Control Field for Multi-Line Graphs

Calculation

```
""
```

NUMDAYS

of days in Report

Calculation

```
DAYSINREPORT()
```

NUMHOURS

of hours in Summation Data

PacketDataRouter_RNC Peg Counts

The following is a list of peg counts for the PacketDataRouter_RNC entity.

PERLENSEC

Period Length

Data Source

RNC

Source Field

PERLENSEC

Source Section

PdrDevice_RNC_WMGeneral

PERLENSEC_K

Period length in seconds aggregation summation in time domain and aggregation maximum between Network Elements.

Data Source

RNC

Source Field

PERLENSEC

Source Section

PdrDevice_RNC_WMGeneral

pmNoFaultyIpPackets

Number of faulty packets.

Data Source

RNC

Source Field

pmNoFaultyIpPackets

Source Section

PacketDataRouter

pmNoRoutedIpBytesDl

Number of routed user IP bytes in the downlink.

Data Source

RNC

Source Field

pmNoRoutedIpBytesDl

Source Section

PacketDataRouter

pmNoRoutedIpBytesUl

Number of routed user IP bytes in the uplink.

Data Source

RNC

Source Field

pmNoRoutedIpBytesUl

Source Section

PacketDataRouter

pmNoRoutedIpPacketsDl

Number of routed user IP packets in the downlink.

Data Source

RNC

Source Field

pmNoRoutedIpPacketsDl

Source Section

PacketDataRouter

pmNoRoutedIpPacketsUl

Number of routed user IP packets in the uplink.

Data Source

RNC

Source Field

pmNoRoutedIpPacketsUl

Source Section

PacketDataRouter

pmSamplesPacketDataRab

Number samples rec within ROP "Number of packet data RABs" for each Packet Data Router.

Data Source

RNC

Source Field

pmSamplesPacketDataRab

Source Section

PacketDataRouter

pmSumPacketDataRab

Sum sample values rec for "Number of packet data RABs" (per Packet Data Router).

Data Source

RNC

Source Field

pmSumPacketDataRab

Source Section

PacketDataRouter

PdrDevice Primitive Calculations

The following is a list of primitive calculations for the PdrDevice entity.

GRAPHmultiLineSeparator

Special Control Field for Multi-Line Graphs

Calculation

""

NUMDAYS

of days in Report

Calculation

```
DAYSINREPORT()
```

NUMHOURS

of hours in Summation Data

PdrDevice Peg Counts

The following is a list of peg counts for the PdrDevice entity.

PERLENSEC

Period Length

Data Source

RNC

Source Field

PERLENSEC

Source Section

PdrDevice_RNC_WMGeneral

PERLENSEC_K

Period length in seconds aggregation summation in time domain and aggregation maximum between Network Elements.

Data Source

RNC

Source Field

PERLENSEC

Source Section

PdrDevice_RNC_WMGeneral

pmSamplesMeasuredPdrSpLoad

Number of samples recorded within the ROP period for "Level of the averaged measured load on the PDR SP".

Data Source

RNC

Source Field

pmSamplesMeasuredPdrSpLoad

Source Section

PdrDevice

pmSumMeasuredPdrSpLoad

Sum of all sample values recorded for "Level of the averaged measured load on the PDR SP"

Data Source

RNC

Source Field

pmSumMeasuredPdrSpLoad

Source Section

PdrDevice

PdrDevice_NodeB Primitive Calculations

The following is a list of primitive calculations for the PdrDevice_NodeB entity.

GRAPHmultiLineSeparator

Special Control Field for Multi-Line Graphs

Calculation

```
""
```

NUMDAYS

of days in Report

Calculation

```
DAYSINREPORT()
```

Updated: 2009-07-22

NUMHOURS

of hours in Summation Data

Calculation

PdrDevice_NodeB Peg Counts

The following is a list of peg counts for the PdrDevice_NodeB entity.

PERLENSEC

Period Length

Data Source

NodeB_RXI

Source Field

PERLENSEC

Source Section

PdrDevice_NodeB_WMGeneral

PERLENSEC_K

Period length in seconds aggregation summation in time domain and aggregation maximum between Network Elements.

Data Source

NodeB_RXI

Source Field

PERLENSEC

Source Section

PdrDevice_NodeB_WMGeneral

pmSamplesMeasuredPdrSpLoad

Number of samples recorded within the ROP period for "Level of the averaged measured load on the PDR SP".

Data Source

RNC

Source Field

pmSamplesMeasuredPdrSpLoad

Source Section

PdrDevice

pmSumMeasuredPdrSpLoad

Sum of all sample values recorded for "Level of the averaged measured load on the PDR SP"

Data Source

RNC

Source Field

pmSumMeasuredPdrSpLoad

Source Section

PdrDevice

RNC_RELEASE

Release

Data Source

NodeB_RXI

Source Section

PdrDevice_NodeB

PdrDevice_RNC Primitive Calculations

The following is a list of primitive calculations for the PdrDevice_RNC entity.

GRAPHmultiLineSeparator

Special Control Field for Multi-Line Graphs

Calculation

""

Updated: 2009-07-22

NUMDAYS

of days in Report

Calculation

```
DAYSINREPORT()
```

NUMHOURS

of hours in Summation Data

Calculation

PdrDevice_RNC Peg Counts

The following is a list of peg counts for the PdrDevice_RNC entity.

PERLENSEC

Period Length

Data Source

RNC_RXI

Source Field

PERLENSEC

Source Section

PdrDevice_RNC_WMGeneral

PERLENSEC_K

Period length in seconds aggregation summation in time domain and aggregation maximum between Network Elements.

Data Source

RNC_RXI

Source Field

PERLENSEC

Source Section

PdrDevice_RNC_WMGeneral

pmSamplesMeasuredPdrSpLoad

Number of samples recorded within the ROP period for "Level of the averaged measured load on the PDR SP".

Data Source

RNC

Source Field

pmSamplesMeasuredPdrSpLoad

Source Section

PdrDevice

pmSumMeasuredPdrSpLoad

Sum of all sample values recorded for "Level of the averaged measured load on the PDR SP"

Data Source

RNC

Source Field

pmSumMeasuredPdrSpLoad

Source Section

PdrDevice

RNC_RELEASE

Release

Data Source

RNC_RXI

Source Section

PdrDevice_RNC

PlugInUnit_NodeB Primitive Calculations

The following is a list of primitive calculations for the PlugInUnit_NodeB entity.

GRAPHmultiLineSeparator

Special Control Field for Multi-Line Graphs

Calculation

```
""
```

NUMDAYS

of days in Report

Calculation

```
DAYSINREPORT()
```

NUMHOURS

of hours in Summation Data

Calculation

PlugInUnit_NodeB Peg Counts

The following is a list of peg counts for the PlugInUnit_NodeB entity.

NodeB_RELEASE

Release

Data Source

NodeB_RNC_RXI

Source Section

PlugInUnit_NodeB

PERLENSEC

Period Length

Data Source

NodeB_RNC_RXI

Source Field

perlensec

Source Section

PlugInUnit_NodeB_WMGeneral

PERLENSEC_K

Period length in seconds aggregation summation in time domain and aggregation maximum between Network Elements.

Data Source

NodeB_RNC_RXI

Source Field

perlensec

Source Section

PlugInUnit_NodeB_WMGeneral

pmProcessorLoad

This states CPU load based Operating System Enea (OSE) function.Value stated %.

Data Source

NodeB_RNC_RXI

Source Field

pmProcessorLoad

Source Section

PlugInUnit_NodeB

PlugInUnit_RNC Primitive Calculations

The following is a list of primitive calculations for the PlugInUnit_RNC entity.

GRAPHmultiLineSeparator

Special Control Field for Multi-Line Graphs

Calculation

""

NUMDAYS

of days in Report

Calculation

```
DAYSINREPORT()
```

NUMHOURS

of hours in Summation Data

Calculation

PlugInUnit_RNC Peg Counts

The following is a list of peg counts for the PlugInUnit_RNC entity.

PERLENSEC

Period Length

Data Source

NodeB_RNC_RXI

Source Field

perlensec

Source Section

PlugInUnit_RNC_WMGeneral

PERLENSEC_K

Period length in seconds aggregation summation in time domain and aggregation maximum between Network Elements.

Data Source

NodeB_RNC_RXI

Source Field

perlensec

Source Section

PlugInUnit_RNC_WMGeneral

pmProcessorLoad

This states CPU load based Operating System Enea (OSE) function.Value stated %.

Data Source

NodeB_RNC_RXI

Source Field

pmProcessorLoad

Source Section

PlugInUnit_RNC

RNC_RELEASE

Release

Data Source

NodeB_RNC_RXI

Source Section

PlugInUnit_RNC

PostServClass Primitive Calculations

The following is a list of primitive calculations for the PostServClass entity.

GRAPHmultiLineSeparator

Special Control Field for Multi-Line Graphs

Calculation

```
""
```

NUMDAYS

of days in Report

Calculation

```
DAYSINREPORT()
```

NUMHOURS

of hours in Summation Data

PostServClass Peg Counts

The following is a list of peg counts for the PostServClass entity.

PERLENSEC

Period Length

Data Source

RNC

Source Field

PERLENSEC

Source Section

Sccpch_WMGeneral

PERLENSEC_K

Period length in seconds aggregation summation in time domain and aggregation maximum between Network Elements.

Data Source

RNC

Source Field

PERLENSEC

Source Section

Sccpch_WMGeneral

pmAgpsAttempt

The counter is stepped when an A_GPS positioning attempt is started. Note: There are three instances of this counter, one for each of the service classes EMERGENCY_CLASS, COMMERCIAL_CLASS_1 and COMMERCIAL_CLASS_2.

Data Source

RNC

Source Field

pmAgpsAttempt

Source Section

PositioningServiceClass

pmAgpsSuccQoSNotOk

The counter is stepped when an A-GPS positioning attempt is successfully completed, with a QoS that Does not meet the requested QoS. Note: There are three instances of this counter, one for each of the service classes EMERGENCY_CLASS, COMMERCIAL_CLASS_1 and COMMERCIAL_CLASS_2.

Data Source

RNC

Source Field

pmAgpsSuccQoSNotOk

Source Section

PositioningServiceClass

pmAgpsSuccQosOk

The counter is stepped when an A-GPS Positioning attempt is successfully completed, with a QoS that meets the requested QoS. Note: There are three instances of this counter, one for each of the service classes EMERGENCY_CLASS, COMMERCIAL_CLASS_1 and COMMERCIAL_CLASS_2.

Data Source

RNC

Source Field

pmAgpsSuccQosOk

Source Section

PositioningServiceClass

pmCellIdAttempt

The counter is stepped when a cell ID positioning attempt is started. Note: There are three instances of this counter, one for each of the service classes EMERGENCY_CLASS, COMMERCIAL_CLASS_1 and COMMERCIAL_CLASS_2.

Data Source

RNC

Source Field

pmCellIdAttempt

Source Section

PositioningServiceClass

pmCellIdSuccQosNotOk

The counter is stepped when a cell ID positioning attempt is successfully completed, with a QoS that does not meet the requested QoS. Note: There are three instances of this counter, one for each of the service classes EMERGENCY_CLASS, COMMERCIAL_CLASS_1 and COMMERCIAL_CLASS_2.

Data Source

RNC

Source Field

pmCellIdSuccQosNotOk

Source Section

PositioningServiceClass

pmCellIdSuccQosOk

The counter is stepped when a cell ID positioning attempt is successfully completed, with a QoS that meets the requested QoS. Note: There are three instances of this counter, one for each of the service classes EMERGENCY_CLASS, COMMERCIAL_CLASS_1 and COMMERCIAL_CLASS_2.

Data Source

RNC

Source Field

pmCellIdSuccQosOk

Source Section

PositioningServiceClass

pmRttAttempt

The counter is stepped when an RTT positioning attempt is started. Note: There are three instances of this counter, one for each of the service classes EMERGENCY_CLASS, COMMERCIAL_CLASS_1 and COMMERCIAL_CLASS_2.

Data Source

RNC

Source Field

pmRttAttempt

Source Section

PositioningServiceClass

pmRttSuccQosNotOk

The counter is stepped when an RTT positioning attempt is successfully completed, with a QoS that does not meet the requested QoS. Note: There are three instances of this counter, one for each of the service classes EMERGENCY_CLASS, COMMERCIAL_CLASS_1 and COMMERCIAL_CLASS_2.

Data Source

RNC

Source Field

pmRttSuccQosNotOk

Source Section

PositioningServiceClass

pmRttSuccQosOk

The counter is stepped when an RTT positioning attempt is successfully completed, with a QoS that meets the requested QoS. Note: There are three instances of this counter, one for each of the service classes EMERGENCY_CLASS, COMMERCIAL_CLASS_1 and COMMERCERCIAL_CLASS_2.

Data Source

RNC

Source Field

pmRttSuccQosOk

Source Section

PositioningServiceClass

Prach Primitive Calculations

The following is a list of primitive calculations for the Prach entity.

GRAPHmultiLineSeparator

Special Control Field for Multi-Line Graphs

Calculation

```
""
```

NUMDAYS

of days in Report

Calculation

```
DAYSINREPORT()
```

NUMHOURS

of hours in Summation Data

Calculation

Prach Peg Counts

The following is a list of peg counts for the Prach entity.

NodeB_RELEASE

Release

Data Source

NodeB_RNC_RXI

Source Section

Prach

PERLENSEC

Period Length

Data Source

NodeB_RNC_RXI

Source Field

perlensec

Source Section

Prach_WMGeneral

PERLENSEC_K

Period length in seconds aggregation summation in time domain and aggregation maximum between Network Elements.

Data Source

NodeB_RNC

Source Field

perlensec

Source Section

Prach_WMGeneral

pmNoPreambleFalseDetection

The number of false detections due to noise on the Random Access Channel (RACH), per GP

Data Source

NodeB_RNC_RXI

Source Field

pmNoPreambleFalseDetection

Source Section

Prach

pmPropagationDelay_00

Propagation delay for the Cell. Propagation delay is measured on RACH messages with correct CRC. A sample is taken from each detected preamble with succesful detected message. Number of samples with maximum delay in number of chips, 0..2562 chips.

Data Source

NodeB

Source Field

pmPropagationDelay

Source Section

Prach

pmPropagationDelay_01

Propagation delay for the Cell. Propagation delay is measured on RACH messages with correct CRC. A sample is taken from each detected preamble with succesful detected message. Number of samples in range 0%..1%

Data Source

NodeB

Source Field

pmPropagationDelay

Source Section

Prach

pmPropagationDelay_02

Propagation delay for the Cell. Propagation delay is measured on RACH messages with correct CRC. A sample is taken from each detected preamble with succesful detected message. Number of samples in range 1%..2%

Data Source

NodeB

Source Field

pmPropagationDelay

Source Section

Prach

pmPropagationDelay_03

Propagation delay for the Cell. Propagation delay is measured on RACH messages with correct CRC. A sample is taken from each detected preamble with succesful detected message. Number of samples in range 2%..3%

Data Source

NodeB

Source Field

pmPropagationDelay

Source Section

Prach

pmPropagationDelay_04

Propagation delay for the Cell. Propagation delay is measured on RACH messages with correct CRC. A sample is taken from each detected preamble with succesful detected message. Number of samples in range 3%..4%

Data Source

NodeB

Source Field

pmPropagationDelay

Source Section

Prach

pmPropagationDelay_05

Propagation delay for the Cell. Propagation delay is measured on RACH messages with correct CRC. A sample is taken from each detected preamble with succesful detected message. Number of samples in range 4%..5%

Data Source

NodeB

Source Field

pmPropagationDelay

Source Section

Prach

pmPropagationDelay_06

Propagation delay for the Cell. Propagation delay is measured on RACH messages with correct CRC. A sample is taken from each detected preamble with succesful detected message. Number of samples in range 5%..6%

Data Source

NodeB

Source Field

pmPropagationDelay

Source Section

Prach

pmPropagationDelay_07

Propagation delay for the Cell. Propagation delay is measured on RACH messages with correct CRC. A sample is taken from each detected preamble with succesful detected message. Number of samples in range 6%..7%

Data Source

NodeB

Source Field

pmPropagationDelay

Source Section

Prach

pmPropagationDelay_08

Propagation delay for the Cell. Propagation delay is measured on RACH messages with correct CRC. A sample is taken from each detected preamble with succesful detected message. Number of samples in range 7%..8%

Data Source

NodeB

Source Field

pmPropagationDelay

Source Section

Prach

pmPropagationDelay_09

Propagation delay for the Cell. Propagation delay is measured on RACH messages with correct CRC. A sample is taken from each detected preamble with succesful detected message. Number of samples in range 8%..9%

Data Source

NodeB

Source Field

pmPropagationDelay

Source Section

Prach

pmPropagationDelay_10

Propagation delay for the Cell. Propagation delay is measured on RACH messages with correct CRC. A sample is taken from each detected preamble with succesful detected message. Number of samples in range 9%..10%

Data Source

NodeB

Source Field

pmPropagationDelay

Source Section

Prach

pmPropagationDelay_11

Propagation delay for the Cell. Propagation delay is measured on RACH messages with correct CRC. A sample is taken from each detected preamble with succesful detected message. Number of samples in range 10%..12%

Data Source

NodeB

Source Field

pmPropagationDelay

Source Section

Prach

pmPropagationDelay_12

Propagation delay for the Cell. Propagation delay is measured on RACH messages with correct CRC. A sample is taken from each detected preamble with succesful detected message. Number of samples in range 12%..14%

Data Source

NodeB

Source Field

pmPropagationDelay

Source Section

Prach

pmPropagationDelay_13

Propagation delay for the Cell. Propagation delay is measured on RACH messages with correct CRC. A sample is taken from each detected preamble with succesful detected message. Number of samples in range 14%..16%

Data Source

NodeB

Source Field

pmPropagationDelay

Source Section

Prach

pmPropagationDelay_14

Propagation delay for the Cell. Propagation delay is measured on RACH messages with correct CRC. A sample is taken from each detected preamble with succesful detected message. Number of samples in range 16%..18%

Data Source

NodeB

Source Field

pmPropagationDelay

Source Section

Prach

pmPropagationDelay_15

Propagation delay for the Cell. Propagation delay is measured on RACH messages with correct CRC. A sample is taken from each detected preamble with succesful detected message. Number of samples in range 18%..20%

Data Source

NodeB

Source Field

pmPropagationDelay

Source Section

Prach

pmPropagationDelay_16

Propagation delay for the Cell. Propagation delay is measured on RACH messages with correct CRC. A sample is taken from each detected preamble with succesful detected message. Number of samples in range 20%..22%

Data Source

NodeB

Source Field

pmPropagationDelay

Source Section

Prach

pmPropagationDelay_17

Propagation delay for the Cell. Propagation delay is measured on RACH messages with correct CRC. A sample is taken from each detected preamble with succesful detected message. Number of samples in range 22%..24%

Data Source

NodeB

Source Field

pmPropagationDelay

Source Section

Prach

pmPropagationDelay_18

Propagation delay for the Cell. Propagation delay is measured on RACH messages with correct CRC. A sample is taken from each detected preamble with succesful detected message. Number of samples in range 24%..26%

Data Source

NodeB

Source Field

pmPropagationDelay

Source Section

Prach

pmPropagationDelay_19

Propagation delay for the Cell. Propagation delay is measured on RACH messages with correct CRC. A sample is taken from each detected preamble with succesful detected message. Number of samples in range 26%..28%

Data Source

NodeB

Source Field

pmPropagationDelay

Source Section

Prach

pmPropagationDelay_20

Propagation delay for the Cell. Propagation delay is measured on RACH messages with correct CRC. A sample is taken from each detected preamble with succesful detected message. Number of samples in range 28%..30%

Data Source

NodeB

Source Field

pmPropagationDelay

Source Section

Prach

pmPropagationDelay_21

Propagation delay for the Cell. Propagation delay is measured on RACH messages with correct CRC. A sample is taken from each detected preamble with succesful detected message. Number of samples in range 30%..33%

Data Source

NodeB

Source Field

pmPropagationDelay

Source Section

Prach

pmPropagationDelay_22

Propagation delay for the Cell. Propagation delay is measured on RACH messages with correct CRC. A sample is taken from each detected preamble with succesful detected message. Number of samples in range 33%..36%

Data Source

NodeB

Source Field

pmPropagationDelay

Source Section

Prach

pmPropagationDelay_23

Propagation delay for the Cell. Propagation delay is measured on RACH messages with correct CRC. A sample is taken from each detected preamble with succesful detected message. Number of samples in range 36%..39%

Data Source

NodeB

Source Field

pmPropagationDelay

Source Section

Prach

pmPropagationDelay_24

Propagation delay for the Cell. Propagation delay is measured on RACH messages with correct CRC. A sample is taken from each detected preamble with succesful detected message. Number of samples in range 39%..42%

Data Source

NodeB

Source Field

pmPropagationDelay

Source Section

Prach

pmPropagationDelay_25

Propagation delay for the Cell. Propagation delay is measured on RACH messages with correct CRC. A sample is taken from each detected preamble with succesful detected message. Number of samples in range 42%..45%

Data Source

NodeB

Source Field

pmPropagationDelay

Source Section

Prach

pmPropagationDelay_26

Propagation delay for the Cell. Propagation delay is measured on RACH messages with correct CRC. A sample is taken from each detected preamble with succesful detected message. Number of samples in range 45%..48%

Data Source

NodeB

Source Field

pmPropagationDelay

Source Section

Prach

pmPropagationDelay_27

Propagation delay for the Cell. Propagation delay is measured on RACH messages with correct CRC. A sample is taken from each detected preamble with succesful detected message. Number of samples in range 48%..51%

Data Source

NodeB

Source Field

pmPropagationDelay

Source Section

Prach

pmPropagationDelay_28

Propagation delay for the Cell. Propagation delay is measured on RACH messages with correct CRC. A sample is taken from each detected preamble with succesful detected message. Number of samples in range 51%..54%

Data Source

NodeB

Source Field

pmPropagationDelay

Source Section

Prach

pmPropagationDelay_29

Propagation delay for the Cell. Propagation delay is measured on RACH messages with correct CRC. A sample is taken from each detected preamble with succesful detected message. Number of samples in range 54%..57%

Data Source

NodeB

Source Field

pmPropagationDelay

Source Section

Prach

pmPropagationDelay_30

Propagation delay for the Cell. Propagation delay is measured on RACH messages with correct CRC. A sample is taken from each detected preamble with succesful detected message. Number of samples in range 57%..60%

Data Source

NodeB

Source Field

pmPropagationDelay

Source Section

Prach

pmPropagationDelay_31

Propagation delay for the Cell. Propagation delay is measured on RACH messages with correct CRC. A sample is taken from each detected preamble with succesful detected message. Number of samples in range 60%..64%

Data Source

NodeB

Source Field

pmPropagationDelay

Source Section

Prach

pmPropagationDelay_32

Propagation delay for the Cell. Propagation delay is measured on RACH messages with correct CRC. A sample is taken from each detected preamble with succesful detected message. Number of samples in range 64%..68%

Data Source

NodeB

Source Field

pmPropagationDelay

Source Section

Prach

pmPropagationDelay_33

Propagation delay for the Cell. Propagation delay is measured on RACH messages with correct CRC. A sample is taken from each detected preamble with succesful detected message. Number of samples in range 68%..72%

Data Source

NodeB

Source Field

pmPropagationDelay

Source Section

Prach

pmPropagationDelay_34

Propagation delay for the Cell. Propagation delay is measured on RACH messages with correct CRC. A sample is taken from each detected preamble with succesful detected message. Number of samples in range 72%..76%

Data Source

NodeB

Source Field

pmPropagationDelay

Source Section

Prach

pmPropagationDelay_35

Propagation delay for the Cell. Propagation delay is measured on RACH messages with correct CRC. A sample is taken from each detected preamble with succesful detected message. Number of samples in range 76%..80%

Data Source

NodeB

Source Field

pmPropagationDelay

Source Section

Prach

pmPropagationDelay_36

Propagation delay for the Cell. Propagation delay is measured on RACH messages with correct CRC. A sample is taken from each detected preamble with succesful detected message. Number of samples in range 80%..84%

Data Source

NodeB

Source Field

pmPropagationDelay

Source Section

Prach

pmPropagationDelay_37

Propagation delay for the Cell. Propagation delay is measured on RACH messages with correct CRC. A sample is taken from each detected preamble with succesful detected message. Number of samples in range 84%..88%

Data Source

NodeB

Source Field

pmPropagationDelay

Source Section

Prach

pmPropagationDelay_38

Propagation delay for the Cell. Propagation delay is measured on RACH messages with correct CRC. A sample is taken from each detected preamble with succesful detected message. Number of samples in range 88%..92%

Data Source

NodeB

Source Field

pmPropagationDelay

Source Section

Prach

pmPropagationDelay_39

Propagation delay for the Cell. Propagation delay is measured on RACH messages with correct CRC. A sample is taken from each detected preamble with succesful detected message. Number of samples in range 92%..96%

Data Source

NodeB

Source Field

pmPropagationDelay

Source Section

Prach

pmPropagationDelay_40

Propagation delay for the Cell. Propagation delay is measured on RACH messages with correct CRC. A sample is taken from each detected preamble with succesful detected message. Number of samples in range 96%..100%

Data Source

NodeB

Source Field

pmPropagationDelay

Source Section

Prach

pmReceivedPreambleSir_00

The Signal-to-Interference Ratio (SIR) of all access attempts above the preamble threshold (except false detection) on the Random Access Channel (RACH), per GPin the range of [-26, -25]db

Data Source

NodeB_RNC_RXI

Source Field

pmReceivedPreambleSir

Source Section

Prach

pmReceivedPreambleSir_01

The Signal-to-Interference Ratio (SIR) of all access attempts above the preamble threshold (except false detection) on the Random Access Channel (RACH), per GPin the range of [-25, -24]db

Data Source

NodeB_RNC_RXI

Source Field

pmReceivedPreambleSir

Source Section

Prach

pmReceivedPreambleSir_02

The Signal-to-Interference Ratio (SIR) of all access attempts above the preamble threshold (except false detection) on the Random Access Channel (RACH), per GPin the range of [-24, -23]db

Data Source

NodeB_RNC_RXI

Source Field

pmReceivedPreambleSir

Source Section

Prach

pmReceivedPreambleSir_03

The Signal-to-Interference Ratio (SIR) of all access attempts above the preamble threshold (except false detection) on the Random Access Channel (RACH), per GPin the range of [-23, -22]db

Data Source

NodeB_RNC_RXI

Source Field

pmReceivedPreambleSir

Source Section

Prach

pmReceivedPreambleSir_04

The Signal-to-Interference Ratio (SIR) of all access attempts above the preamble threshold (except false detection) on the Random Access Channel (RACH), per GPin the range of [-22, -21]db

Data Source

NodeB_RNC_RXI

Source Field

pmReceivedPreambleSir

Source Section

Prach

pmReceivedPreambleSir_05

The Signal-to-Interference Ratio (SIR) of all access attempts above the preamble threshold (except false detection) on the Random Access Channel (RACH), per GPin the range of [-21, -20]db

Data Source

NodeB_RNC_RXI

Source Field

pmReceivedPreambleSir

Source Section

Prach

pmReceivedPreambleSir_06

The Signal-to-Interference Ratio (SIR) of all access attempts above the preamble threshold (except false detection) on the Random Access Channel (RACH), per GPin the range of [-20, -19]db

Data Source

NodeB_RNC_RXI

Source Field

pmReceivedPreambleSir

Source Section

Prach

pmReceivedPreambleSir_07

The Signal-to-Interference Ratio (SIR) of all access attempts above the preamble threshold (except false detection) on the Random Access Channel (RACH), per GPin the range of [-19, -18]db

Data Source

NodeB_RNC_RXI

Source Field

pmReceivedPreambleSir

Source Section

Prach

pmReceivedPreambleSir_08

The Signal-to-Interference Ratio (SIR) of all access attempts above the preamble threshold (except false detection) on the Random Access Channel (RACH), per GPin the range of [-18, -17]db

Data Source

NodeB_RNC_RXI

Source Field

pmReceivedPreambleSir

Source Section

Prach

pmReceivedPreambleSir_09

The Signal-to-Interference Ratio (SIR) of all access attempts above the preamble threshold (except false detection) on the Random Access Channel (RACH), per GPin the range of [-17, -16]db

Data Source

NodeB_RNC_RXI

Source Field

pmReceivedPreambleSir

Source Section

Prach

pmReceivedPreambleSir_10

The Signal-to-Interference Ratio (SIR) of all access attempts above the preamble threshold (except false detection) on the Random Access Channel (RACH), per GPin the range of [-16, -15]db

Data Source

NodeB_RNC_RXI

Source Field

pmReceivedPreambleSir

Source Section

Prach

pmReceivedPreambleSir_11

The Signal-to-Interference Ratio (SIR) of all access attempts above the preamble threshold (except false detection) on the Random Access Channel (RACH), per GPin the range of [-15, -14]db

Data Source

NodeB_RNC_RXI

Source Field

pmReceivedPreambleSir

Source Section

Prach

pmReceivedPreambleSir_12

The Signal-to-Interference Ratio (SIR) of all access attempts above the preamble threshold (except false detection) on the Random Access Channel (RACH), per GPin the range of [-14, -13]db

Data Source

NodeB_RNC_RXI

Source Field

pmReceivedPreambleSir

Source Section

Prach

pmReceivedPreambleSir_13

The Signal-to-Interference Ratio (SIR) of all access attempts above the preamble threshold (except false detection) on the Random Access Channel (RACH), per GPin the range of [-13, -12]db

Data Source

NodeB_RNC_RXI

Source Field

pmReceivedPreambleSir

Source Section

Prach

pmReceivedPreambleSir_14

The Signal-to-Interference Ratio (SIR) of all access attempts above the preamble threshold (except false detection) on the Random Access Channel (RACH), per GPin the range of [-12, -11]db

Data Source

NodeB_RNC_RXI

Source Field

pmReceivedPreambleSir

Source Section

Prach

pmReceivedPreambleSir_15

The Signal-to-Interference Ratio (SIR) of all access attempts above the preamble threshold (except false detection) on the Random Access Channel (RACH), per GPin the range of [-11, -10]db

Data Source

NodeB_RNC_RXI

Source Field

pmReceivedPreambleSir

Source Section

Prach

pmReceivedPreambleSir_16

The Signal-to-Interference Ratio (SIR) of all access attempts above the preamble threshold (except false detection) on the Random Access Channel (RACH), per GPin the range of [-10, -9]db

Data Source

NodeB_RNC_RXI

Source Field

pmReceivedPreambleSir

Source Section

Prach

pmReceivedPreambleSir_17

The Signal-to-Interference Ratio (SIR) of all access attempts above the preamble threshold (except false detection) on the Random Access Channel (RACH), per GPin the range of [-9, -8]db

Data Source

NodeB_RNC_RXI

Source Field

pmReceivedPreambleSir

Source Section

Prach

pmReceivedPreambleSir_18

The Signal-to-Interference Ratio (SIR) of all access attempts above the preamble threshold (except false detection) on the Random Access Channel (RACH), per GPin the range of [-8, -7]db

Data Source

NodeB_RNC_RXI

Source Field

pmReceivedPreambleSir

Source Section

Prach

pmReceivedPreambleSir_19

The Signal-to-Interference Ratio (SIR) of all access attempts above the preamble threshold (except false detection) on the Random Access Channel (RACH), per GPin the range of [-7, -6]db

Data Source

NodeB_RNC_RXI

Source Field

pmReceivedPreambleSir

Source Section

Prach

pmReceivedPreambleSir_20

The Signal-to-Interference Ratio (SIR) of all access attempts above the preamble threshold (except false detection) on the Random Access Channel (RACH), per GPin the range of [-6, -5]db

Data Source

NodeB_RNC_RXI

Source Field

pmReceivedPreambleSir

Source Section

Prach

pmReceivedPreambleSir_21

The Signal-to-Interference Ratio (SIR) of all access attempts above the preamble threshold (except false detection) on the Random Access Channel (RACH), per GPin the range of [-5, -4]db

Data Source

NodeB_RNC_RXI

Source Field

pmReceivedPreambleSir

Source Section

Prach

pmReceivedPreambleSir_22

The Signal-to-Interference Ratio (SIR) of all access attempts above the preamble threshold (except false detection) on the Random Access Channel (RACH), per GPin the range of [-4, -3]db

Data Source

NodeB_RNC_RXI

Source Field

pmReceivedPreambleSir

Source Section

Prach

pmReceivedPreambleSir_23

The Signal-to-Interference Ratio (SIR) of all access attempts above the preamble threshold (except false detection) on the Random Access Channel (RACH), per GPin the range of [-3, -2]db

Data Source

NodeB_RNC_RXI

Source Field

pmReceivedPreambleSir

Source Section

Prach

pmReceivedPreambleSir_24

The Signal-to-Interference Ratio (SIR) of all access attempts above the preamble threshold (except false detection) on the Random Access Channel (RACH), per GPin the range of [-2, -1]db

Data Source

NodeB_RNC_RXI

Source Field

pmReceivedPreambleSir

Source Section

Prach

pmReceivedPreambleSir_25

The Signal-to-Interference Ratio (SIR) of all access attempts above the preamble threshold (except false detection) on the Random Access Channel (RACH), per GPin the range of [-1, 0]db

Data Source

NodeB_RNC_RXI

Source Field

pmReceivedPreambleSir

Source Section

Prach

pmReceivedPreambleSir_26

The Signal-to-Interference Ratio (SIR) of all access attempts above the preamble threshold (except false detection) on the Random Access Channel (RACH), per GPin the range of [0, rest]db

Data Source

NodeB_RNC_RXI

Source Field

pmReceivedPreambleSir

Source Section

Prach

pmSuccReceivedBlocks

Number of successfully received transport blocks

Data Source

NodeB_RNC_RXI

Source Field

pmSuccReceivedBlocks

Source Section

Prach

pmUnsuccReceivedBlocks

Number of unsuccessfully received transport blocks

Data Source

NodeB_RNC_RXI

Source Field

pmUnsuccReceivedBlocks

Source Section

Prach

RA_RNC Primitive Calculations

The following is a list of primitive calculations for the RA_RNC entity.

GRAPHmultiLineSeparator

Special Control Field for Multi-Line Graphs

Calculation

```
""
```

NUMDAYS

of days in Report

Calculation

```
DAYSINREPORT()
```

NUMHOURS

of hours in Summation Data

Calculation

RA_RNC Peg Counts

The following is a list of peg counts for the RA_RNC entity.

nmo

Network operation mode that indicates whether the Gs interface between the SGSN and MSC/VLR is installed. { string, Default= MODE_II }

Data Source

Bulk CM

Source Section

RoutingArea

PERLENSEC

Period Length

Data Source

NodeB_RNC_RXI

Source Field

perlensec

Source Section

RA_RNC_WMGeneral

PERLENSEC_K

Period length in seconds aggregation summation in time domain and aggregation maximum between Network Elements.

Data Source

NodeB_RNC_RXI

Source Field

perlensec

Source Section

RA_RNC_WMGeneral

pmCnInitPagingToIdleUeRa

Number of CN-init pages sent to Idle mode UEs in spec RA (Packet Switched pages).

Data Source

NodeB_RNC_RXI

Source Field

pmCnInitPagingToIdleUeRa

Source Section

RoutingArea

rac

Routing Area Code of a routing area. An RA is used by UTRAN to page mobiles on request from the PS CN. { long, Range = 0..255, Default=Mandatory }

Data Source

Bulk CM

Source Section

RoutingArea

reservedBy

Sequence of UtranCell MO references which belongs to the RA. { sequence<UtranCell,2304>, Default = empty, Default=, ReadOnly, }

Data Source

Bulk CM

Source Section

RoutingArea

RNC_RELEASE

Release

Data Source

NodeB_RNC_RXI

Source Section

RoutingArea

userLabel

Provides the possibility to put a user-friendly label on the MO instance. The value is not used by the RNC. { string, LengthRange = 0..128, Default= "" }

Data Source

Bulk CM

Source Section

RoutingArea

RABType Primitive Calculations

The following is a list of primitive calculations for the RABType entity.

Avr_PS_RAB_STBL_SUCC_RATE

Percentage of total number of currently active RABs to samples recorded within the ROP for number of RABs established.

Calculation

```
100.0 * pmSumRabEstablish / pmSamplesRabEstablish
```

GRAPHmultiLineSeparator

Special Control Field for Multi-Line Graphs

Calculation

```
""
```

k_PAYLOAD_DL_TOT

DL Total payload traffic (Mbit), derived from FACH payload + DCH payload before diversity split.

Calculation

```
vsum((1.0 * pmDlFachTrafficVolume) / 1024, (1.0 * pmDlDchTrafficVolumeBefo-
reSplit) / 1024)
```

k_PAYLOAD_UL_TOT

UL Total payload traffic (Mbit), derived from RACH payload + DCH payload after diversity combining.

Calculation

```
vsum((1.0 * pmUlRachTrafficVolume) / 1024, (1.0 * pmUlDchTrafficVolumeAf-
terComb) / 1024)
```

k_RAB_EST_FAIL

Number of RAB Establishment failures

Calculation

```
vsum(pmNoRabEstablishAttempts, -1.0 * pmNoRabEstablishSuccess)
```

k_RAB_EST_FAIL_RATE

RAB Establishment failure rate %

Calculation

```
(pmNoRabEstablishAttempts - pmNoRabEstablishSuccess) * 100.0 / pmNoRa-
bEstablishAttempts
```

k_RAB_REL_FAIL

Number of failed RAB releases

Calculation

```
vsum(pmNoRabReleaseAttempts, -1 * pmNoRabReleaseSuccess)
```

k_RAB_REL_FAIL_RATE

RAB release failure rate %

Calculation

```
100.0 * vsum(pmNoRabReleaseAttempts, -1.0 * pmNoRabReleaseSuccess) /
pmNoRabReleaseAttempts
```

NUMDAYS

of days in Report

Calculation

```
DAYSINREPORT()
```

NUMHOURS

of hours in Summation Data

Calculation

Uplink_BLER

The transport block error rate after combining in uplink

Calculation

```
100.0 * pmFaultyTransportBlocksAcUl / pmTransportBlocksAcUl
```

Uplink_PS_Streaming_BLER

Transport block error rate after combining at RNC in uplink for PS streaming (UeRc = 13).

Calculation

```
100.0 * ( pmFaultyTransportBlocksAcUl / pmTransportBlocksAcUl )
```

Uplink_Speech_BLER

The transport block error rate after combining at RNC in uplink for speech (UeRc = 2).

Calculation

```
100.0 * pmFaultyTransportBlocksAcUl / pmTransportBlocksAcUl
```

RABType Peg Counts

The following is a list of peg counts for the RABType entity.

PERLENSEC

Period Length

Data Source

NodeB_RNC_RXI

Source Field

perlensec

Source Section

UeRc_WMGeneral

PERLENSEC_K

Period length in seconds aggregation summation in time domain and aggregation maximum between Network Elements.

Data Source

NodeB_RNC

Source Field

perlensec

Source Section

UeRc_WMGeneral

pmDlDchTrafficVolumeBeforeSplit

Payload traff DL in kbits on dedicated chan (DCH). Before Diversity Split.

Data Source

NodeB_RNC_RXI

Source Field

pmDlDchTrafficVolumeBeforeSplit

Source Section

UeRc

pmDlFachTrafficVolume

Payload traffic downlink in kbits on common channels (FACH).

Data Source

NodeB_RNC_RXI

Source Field

pmDlFachTrafficVolume

Source Section

UeRc

pmFaultyTransportBlocksAcUl

Number of faulty uplink DCH transport blocks for this RAB type after combining.

Data Source

NodeB_RNC_RXI

Source Field

pmFaultyTransportBlocksAcUl

Source Section

UeRc

pmNoRabEstablishAttempts

Number of RAB establishment attempts.

Data Source

NodeB_RNC_RXI

Source Field

pmNoRabEstablishAttempts

Source Section

UeRc

pmNoRabEstablishSuccess

Number of successful RAB establishments.

Data Source

NodeB_RNC_RXI

Source Field

pmNoRabEstablishSuccess

Source Section

UeRc

pmNoRabReleaseAttempts

Number of RAB release attempts.

Data Source

NodeB_RNC_RXI

Source Field

pmNoRabReleaseAttempts

Source Section

UeRc

pmNoRabReleaseSuccess

Number of successful RAB releases.

Data Source

NodeB_RNC_RXI

Source Field

pmNoRabReleaseSuccess

Source Section

UeRc

pmSamplesRabEstablish

Number of samples recorded within the ROP for Number of RABs established.

Data Source

NodeB_RNC_RXI

Source Field

pmSamplesRabEstablish

Source Section

UeRc

pmSumRabEstablish

Sum of all sample values recorded for Number of RABs established.

Data Source

NodeB_RNC_RXI

Source Field

pmSumRabEstablish

Source Section

UeRc

pmTransportBlocksAcUl

Number of uplink DCH transport blocks for this RAB type after combining.

Data Source

NodeB_RNC_RXI

Source Field

pmTransportBlocksAcUl

Source Section

UeRc

pmUlDchTrafficVolumeAfterComb

Payload traff uplink in kbits on dedicated chan (DCH). After diversity comb.

Data Source

NodeB_RNC_RXI

Source Field

pmUlDchTrafficVolumeAfterComb

Source Section

UeRc

pmUlRachTrafficVolume

Payload traffic uplink in kbits on common channels (RACH).

Data Source

NodeB_RNC_RXI

Source Field

pmUlRachTrafficVolume

Source Section

UeRc

reservedBy

System constant. { Default=empty, Default= NoNotification, ReadOnly, }

Data Source

Bulk CM

Source Section

UeRc

RNC_RELEASE

Release

Data Source

NodeB_RNC_RXI

Source Section

UeRc

userLabel

Provides the possibility to put a user-friendly label on the MO instance. The value is not used by the RNC. { string, LengthRange = 0..128, Default= "" }

Data Source

Bulk CM

Source Section

UeRc

RACH Primitive Calculations

The following is a list of primitive calculations for the RACH entity.

GRAPHmultiLineSeparator

Special Control Field for Multi-Line Graphs

Calculation

```
""
```

NUMDAYS

of days in Report

Calculation

```
DAYSINREPORT()
```

NUMHOURS

of hours in Summation Data

Calculation

RACH Peg Counts

The following is a list of peg counts for the RACH entity.

administrativeState

The administrative state of the channel. { string, Default= UNLOCKED }

Data Source

Bulk CM

Source Section

Rach

aichPower

AICH power, to be used for transmitting on AICH, relative to the primaryCpichPower value. { long, Range = -22..5, Default=-6 }

Data Source

Bulk CM

Source Section

Rach

aichTransmissionTiming

AICH timing delay parameter.Changing this attribute may affect traffic. { long, Range = 3..4, Default=4 }

Data Source

Bulk CM

Source Section

Rach

availabilityStatus

The availability status of the channel. { long, Range = 0..2047, Default=0, ReadOnly, NonPersistent, }

Data Source

Bulk CM

Source Section

Rach

constantValueCprach

Constant value used by the UE to calculate the initial power on PRACH according to the Open loop power control procedure. { long, Range = -35..-10, Default=-27 }

Data Source

Bulk CM

Source Section

Rach

maxPreambleCycle

Maximum number of preamble ramping cycle. { long, Range = 1..32, Default=4 }

Data Source

Bulk CM

Source Section

Rach

NodeB_RELEASE

Release

Data Source

NodeB_RNC_RXI

Source Section

Rach

operationalState

The operational state of the channel. { string, Default= ENABLED, ReadOnly, NonPersistent, }

Data Source

Bulk CM

Source Section

Rach

PERLENSEC

Period Length

Data Source

NodeB_RNC_RXI

Source Field

perlensec

Source Section

Rach_WMGeneral

PERLENSEC_K

Period length in seconds aggregation summation in time domain and aggregation maximum between Network Elements.

Data Source

NodeB_RNC

Source Field

perlensec

Source Section

Rach_WMGeneral

pmFaultyTransportBlocks

Total number of faulty RACH transport blocks.

Data Source

NodeB_RNC_RXI

Source Field

pmFaultyTransportBlocks

Source Section

Rach

pmNoRecRandomAccSuccess

Number of successfully received frames on the RACH.

Data Source

NodeB_RNC_RXI

Source Field

pmNoRecRandomAccSuccess

Source Section

Rach

pmTransportBlocks

Total number of RACH transport blocks.

Data Source

NodeB_RNC_RXI

Source Field

pmTransportBlocks

Source Section

Rach

powerOffsetP0

Power step when no acquisition indicator is received. { long, Range = 1..8, Default=3 }

Data Source

Bulk CM

Source Section

Rach

powerOffsetPpm

Power step between preamble and the message part. { long, Range = -5..10, Default=-4 }

Data Source

Bulk CM

Source Section

Rach

preambleRetransMax

Maximum number of preambles in one preamble ramping cycle. { long, Range = 1..64, Default=8 }

Data Source

Bulk CM

Source Section

Rach

preambleSignatures

Preamble signatures for PRACH. { long, Range = 1..65535, Default=65535 }

Data Source

Bulk CM

Source Section

Rach

preambleThreshold

System constant. { long, Default=34 }

Data Source

Bulk CM

Source Section

Rach

scramblingCodeWordNo

Scrambling Code for preamble and message part. (PRACH parameter) { long, Range = 0..15, Default=0 }

Data Source

Bulk CM

Source Section

Rach

spreadingFactor

Minimum spreading factor to use for PRACH. { long, Range = 32, Default=64, 64, }

Data Source

Bulk CM

Source Section

Rach

subChannelNo

One or more sub channel numbers can be active. The rightmost bit (bit 0) in the Corba data type long corresponds to sub channel no 0, bit 1 corresponds to subchannel no 1 and so on, however not that bit 0 is the leftmost bit in the ASN.1 type bitstring. { long, Range = 1..4095, Default=4095 }

Data Source

Bulk CM

Source Section

Rach

userLabel

Provides the possibility to put a user-friendly label on the MO instance. The value is not used by the RNC. { string, LengthRange = 0..128, Default= "" }

Data Source

Bulk CM

Source Section

Rach

RadioLinks Primitive Calculations

The following is a list of primitive calculations for the RadioLinks entity.

GRAPHmultiLineSeparator

Special Control Field for Multi-Line Graphs

Calculation

```
""
```

NUMDAYS

of days in Report

Calculation

```
DAYSINREPORT()
```

NUMHOURS

of hours in Summation Data

Calculation

pmAverageSirErrorP5MD_01

The average SIR error on DPCCH physical channel. SIR error is the difference between the measured SIR and SIR target. In order to control load, number of measurements are restricted per RAXB. Maximum number of measurements are 10 % of the maximum number of CEs per RAXB. Number of sampled values in range -10.0 to -9.5 dB

Calculation

```
pmAverageSirError_03
```

pmAverageSirErrorP5MD_02

The average SIR error on DPCCH physical channel. SIR error is the difference between the measured SIR and SIR target. In order to control load, number of measurements are restricted per RAXB. Maximum number of measurements are 10 % of the maximum number of CEs per RAXB. Number of sampled values in range -9.5 to -9.0 dB

Calculation

```
pmAverageSirError_04
```

pmAverageSirErrorP5MD_03

The average SIR error on DPCCH physical channel. SIR error is the difference between the measured SIR and SIR target. In order to control load, number of measurements are restricted per RAXB. Maximum number of measurements are 10 % of the maximum number of CEs per RAXB. Number of sampled values in range -9.0 to -8.5 dB

Calculation

```
pmAverageSirError_05
```

pmAverageSirErrorP5MD_04

The average SIR error on DPCCH physical channel. SIR error is the difference between the measured SIR and SIR target. In order to control load, number of measurements are restricted per RAXB. Maximum number of measurements are 10 % of the maximum number of CEs per RAXB. Number of sampled values in range -8.5 to -8.0 dB

Calculation

```
pmAverageSirError_06
```

pmAverageSirErrorP5MD_05

The average SIR error on DPCCH physical channel. SIR error is the difference between the measured SIR and SIR target. In order to control load, number of measurements are restricted per RAXB. Maximum number of measurements are 10 % of the maximum number of CEs per RAXB. Number of sampled values in range -8.0 to -7.5 dB

Calculation

```
pmAverageSirError_07
```

pmAverageSirErrorP5MD_06

The average SIR error on DPCCH physical channel. SIR error is the difference between the measured SIR and SIR target. In order to control load, number of measurements are restricted per RAXB. Maximum number of measurements are 10 % of the maximum number of CEs per RAXB. Number of sampled values in range -7.5 to -7.0 dB

Calculation

```
pmAverageSirError_08
```

pmAverageSirErrorP5MD_07

The average SIR error on DPCCH physical channel. SIR error is the difference between the measured SIR and SIR target. In order to control load, number of measurements are restricted per RAXB. Maximum number of measurements are 10 % of the maximum number of CEs per RAXB. Number of sampled values in range -7.0 to -6.5 dB

Calculation

```
pmAverageSirError_09
```

pmAverageSirErrorP5MD_08

The average SIR error on DPCCH physical channel. SIR error is the difference between the measured SIR and SIR target. In order to control load, number of measurements are restricted

per RAXB. Maximum number of measurements are 10 % of the maximum number of CEs per RAXB. Number of sampled values in range -6.5 to -6.0 dB

Calculation

`pmAverageSirError_10`

pmAverageSirErrorP5MD_09

The average SIR error on DPCCH physical channel. SIR error is the difference between the measured SIR and SIR target. In order to control load, number of measurements are restricted per RAXB. Maximum number of measurements are 10 % of the maximum number of CEs per RAXB. Number of sampled values in range -6.0 to -5.5 dB

Calculation

`pmAverageSirError_11`

pmAverageSirErrorP5MD_10

The average SIR error on DPCCH physical channel. SIR error is the difference between the measured SIR and SIR target. In order to control load, number of measurements are restricted per RAXB. Maximum number of measurements are 10 % of the maximum number of CEs per RAXB. Number of sampled values in range -5.5 to -5.0 dB

Calculation

`pmAverageSirError_12`

pmAverageSirErrorP5MD_11

The average SIR error on DPCCH physical channel. SIR error is the difference between the measured SIR and SIR target. In order to control load, number of measurements are restricted per RAXB. Maximum number of measurements are 10 % of the maximum number of CEs per RAXB. Number of sampled values in range -5.0 to -4.5 dB

Calculation

`pmAverageSirError_13`

pmAverageSirErrorP5MD_12

The average SIR error on DPCCH physical channel. SIR error is the difference between the measured SIR and SIR target. In order to control load, number of measurements are restricted per RAXB. Maximum number of measurements are 10 % of the maximum number of CEs per RAXB. Number of sampled values in range -4.5 to -4.0 dB

Calculation

`pmAverageSirError_14`

pmAverageSirErrorP5MD_13

The average SIR error on DPCCH physical channel. SIR error is the difference between the measured SIR and SIR target. In order to control load, number of measurements are restricted per RAXB. Maximum number of measurements are 10 % of the maximum number of CEs per RAXB. Number of sampled values in range -4.0 to -3.5 dB

Calculation

```
pmAverageSirError_15
```

pmAverageSirErrorP5MD_14

The average SIR error on DPCCH physical channel. SIR error is the difference between the measured SIR and SIR target. In order to control load, number of measurements are restricted per RAXB. Maximum number of measurements are 10 % of the maximum number of CEs per RAXB. Number of sampled values in range -3.5 to -3.0 dB

Calculation

```
pmAverageSirError_16
```

pmAverageSirErrorP5MD_15

The average SIR error on DPCCH physical channel. SIR error is the difference between the measured SIR and SIR target. In order to control load, number of measurements are restricted per RAXB. Maximum number of measurements are 10 % of the maximum number of CEs per RAXB. Number of sampled values in range -3.0 to -2.5 dB

Calculation

```
pmAverageSirError_17
```

pmAverageSirErrorP5MD_16

The average SIR error on DPCCH physical channel. SIR error is the difference between the measured SIR and SIR target. In order to control load, number of measurements are restricted per RAXB. Maximum number of measurements are 10 % of the maximum number of CEs per RAXB. Number of sampled values in range -2.5 to -2.0 dB

Calculation

```
pmAverageSirError_18
```

pmAverageSirErrorP5MD_17

The average SIR error on DPCCH physical channel. SIR error is the difference between the measured SIR and SIR target. In order to control load, number of measurements are restricted per RAXB. Maximum number of measurements are 10 % of the maximum number of CEs per RAXB. Number of sampled values in range -2.0 to -1.5 dB

Calculation

```
pmAverageSirError_19
```

pmAverageSirErrorP5MD_18

The average SIR error on DPCCH physical channel. SIR error is the difference between the measured SIR and SIR target. In order to control load, number of measurements are restricted per RAXB. Maximum number of measurements are 10 % of the maximum number of CEs per RAXB. Number of sampled values in range -1.5 to -1.0 dB

Calculation

```
pmAverageSirError_20
```

pmAverageSirErrorP5MD_19

The average SIR error on DPCCH physical channel. SIR error is the difference between the measured SIR and SIR target. In order to control load, number of measurements are restricted per RAXB. Maximum number of measurements are 10 % of the maximum number of CEs per RAXB. Number of sampled values in range -1.0 to -0.5 dB

Calculation

```
pmAverageSirError_21
```

pmAverageSirErrorP5MD_20

The average SIR error on DPCCH physical channel. SIR error is the difference between the measured SIR and SIR target. In order to control load, number of measurements are restricted per RAXB. Maximum number of measurements are 10 % of the maximum number of CEs per RAXB. Number of sampled values in range -0.5 to 0.0 dB

Calculation

```
pmAverageSirError_22
```

pmAverageSirErrorP5MD_21

The average SIR error on DPCCH physical channel. SIR error is the difference between the measured SIR and SIR target. In order to control load, number of measurements are restricted per RAXB. Maximum number of measurements are 10 % of the maximum number of CEs per RAXB. Number of sampled values in range 0.0 to 0.5 dB

Calculation

```
pmAverageSirError_23
```

pmAverageSirErrorP5MD_22

The average SIR error on DPCCH physical channel. SIR error is the difference between the measured SIR and SIR target. In order to control load, number of measurements are restricted

per RAXB. Maximum number of measurements are 10 % of the maximum number of CEs per RAXB. Number of sampled values in range 0.5 to 1.0 dB

Calculation

`pmAverageSirError_24`

pmAverageSirErrorP5MD_23

The average SIR error on DPCCH physical channel. SIR error is the difference between the measured SIR and SIR target. In order to control load, number of measurements are restricted per RAXB. Maximum number of measurements are 10 % of the maximum number of CEs per RAXB. Number of sampled values in range 1.0 to 1.5 dB

Calculation

`pmAverageSirError_25`

pmAverageSirErrorP5MD_24

The average SIR error on DPCCH physical channel. SIR error is the difference between the measured SIR and SIR target. In order to control load, number of measurements are restricted per RAXB. Maximum number of measurements are 10 % of the maximum number of CEs per RAXB. Number of sampled values in range 1.5 to 2.0 dB

Calculation

`pmAverageSirError_26`

pmAverageSirErrorP5MD_25

The average SIR error on DPCCH physical channel. SIR error is the difference between the measured SIR and SIR target. In order to control load, number of measurements are restricted per RAXB. Maximum number of measurements are 10 % of the maximum number of CEs per RAXB. Number of sampled values in range 2.0 to 2.5 dB

Calculation

`pmAverageSirError_27`

pmAverageSirErrorP5MD_26

The average SIR error on DPCCH physical channel. SIR error is the difference between the measured SIR and SIR target. In order to control load, number of measurements are restricted per RAXB. Maximum number of measurements are 10 % of the maximum number of CEs per RAXB. Number of sampled values in range 2.5 to 3.0 dB

Calculation

`pmAverageSirError_28`

pmAverageSirErrorP5MD_27

The average SIR error on DPCCH physical channel. SIR error is the difference between the measured SIR and SIR target. In order to control load, number of measurements are restricted per RAXB. Maximum number of measurements are 10 % of the maximum number of CEs per RAXB. Number of sampled values in range 3.0 to 3.5 dB

Calculation

```
pmAverageSirError_29
```

pmAverageSirErrorP5MD_28

The average SIR error on DPCCH physical channel. SIR error is the difference between the measured SIR and SIR target. In order to control load, number of measurements are restricted per RAXB. Maximum number of measurements are 10 % of the maximum number of CEs per RAXB. Number of sampled values in range 3.5 to 4.0 dB

Calculation

```
pmAverageSirError_30
```

pmAverageSirErrorP5MD_29

The average SIR error on DPCCH physical channel. SIR error is the difference between the measured SIR and SIR target. In order to control load, number of measurements are restricted per RAXB. Maximum number of measurements are 10 % of the maximum number of CEs per RAXB. Number of sampled values in range 4.0 to 4.5 dB

Calculation

```
pmAverageSirError_31
```

pmAverageSirErrorP5MD_30

The average SIR error on DPCCH physical channel. SIR error is the difference between the measured SIR and SIR target. In order to control load, number of measurements are restricted per RAXB. Maximum number of measurements are 10 % of the maximum number of CEs per RAXB. Number of sampled values in range 4.5 to 5.0 dB

Calculation

```
pmAverageSirError_32
```

pmAverageSirErrorP5MD_31

The average SIR error on DPCCH physical channel. SIR error is the difference between the measured SIR and SIR target. In order to control load, number of measurements are restricted per RAXB. Maximum number of measurements are 10 % of the maximum number of CEs per RAXB. Number of sampled values in range 5.0 to 5.5 dB

Calculation

```
pmAverageSirError_33
```

pmAverageSirErrorP5MD_32

The average SIR error on DPCCH physical channel. SIR error is the difference between the measured SIR and SIR target. In order to control load, number of measurements are restricted per RAXB. Maximum number of measurements are 10 % of the maximum number of CEs per RAXB. Number of sampled values in range 5.5 to 6.0 dB

Calculation

```
pmAverageSirError_34
```

pmAverageSirErrorP5MD_33

The average SIR error on DPCCH physical channel. SIR error is the difference between the measured SIR and SIR target. In order to control load, number of measurements are restricted per RAXB. Maximum number of measurements are 10 % of the maximum number of CEs per RAXB. Number of sampled values in range 6.0 to 6.5 dB

Calculation

```
pmAverageSirError_35
```

pmAverageSirErrorP5MD_34

The average SIR error on DPCCH physical channel. SIR error is the difference between the measured SIR and SIR target. In order to control load, number of measurements are restricted per RAXB. Maximum number of measurements are 10 % of the maximum number of CEs per RAXB. Number of sampled values in range 6.5 to 7.0 dB

Calculation

```
pmAverageSirError_36
```

pmAverageSirErrorP5MD_35

The average SIR error on DPCCH physical channel. SIR error is the difference between the measured SIR and SIR target. In order to control load, number of measurements are restricted per RAXB. Maximum number of measurements are 10 % of the maximum number of CEs per RAXB. Number of sampled values in range 7.0 to 7.5 dB

Calculation

```
pmAverageSirError_37
```

pmAverageSirErrorP5MD_36

The average SIR error on DPCCH physical channel. SIR error is the difference between the measured SIR and SIR target. In order to control load, number of measurements are restricted

per RAXB. Maximum number of measurements are 10 % of the maximum number of CEs per RAXB. Number of sampled values in range 7.5 to 8.0 dB

Calculation

`pmAverageSirError_38`

pmAverageSirErrorP5MD_37

The average SIR error on DPCCH physical channel. SIR error is the difference between the measured SIR and SIR target. In order to control load, number of measurements are restricted per RAXB. Maximum number of measurements are 10 % of the maximum number of CEs per RAXB. Number of sampled values in range 8.0 to 8.5 dB

Calculation

`pmAverageSirError_39`

pmAverageSirErrorP5MD_38

The average SIR error on DPCCH physical channel. SIR error is the difference between the measured SIR and SIR target. In order to control load, number of measurements are restricted per RAXB. Maximum number of measurements are 10 % of the maximum number of CEs per RAXB. Number of sampled values in range 8.5 to 9.0 dB

Calculation

`pmAverageSirError_40`

pmAverageSirErrorP5MD_39

The average SIR error on DPCCH physical channel. SIR error is the difference between the measured SIR and SIR target. In order to control load, number of measurements are restricted per RAXB. Maximum number of measurements are 10 % of the maximum number of CEs per RAXB. Number of sampled values in range 9.0 to 9.5 dB

Calculation

`pmAverageSirError_41`

pmAverageSirErrorP5MD_40

The average SIR error on DPCCH physical channel. SIR error is the difference between the measured SIR and SIR target. In order to control load, number of measurements are restricted per RAXB. Maximum number of measurements are 10 % of the maximum number of CEs per RAXB. Number of sampled values in range 9.5 to 10.0 dB

Calculation

`pmAverageSirError_42`

pmAverageSirP5MD_01

Average SIR on DPCCH in the range -7..-6.5dB

Calculation

```
pmAverageSir_09
```

pmAverageSirP5MD_02

Average SIR on DPCCH in the range -6.5..-6dB

Calculation

```
pmAverageSir_10
```

pmAverageSirP5MD_03

Average SIR on DPCCH in the range -6..-5.5dB

Calculation

```
pmAverageSir_11
```

pmAverageSirP5MD_04

Average SIR on DPCCH in the range -5.5..-5dB

Calculation

```
pmAverageSir_12
```

pmAverageSirP5MD_05

Average SIR on DPCCH in the range -5..-4.5dB

Calculation

```
pmAverageSir_13
```

pmAverageSirP5MD_06

Average SIR on DPCCH in the range -4.5..-4dB

Calculation

```
pmAverageSir_14
```

pmAverageSirP5MD_07

Average SIR on DPCCH in the range -4..-3.5dB

Calculation

```
pmAverageSir_15
```

pmAverageSirP5MD_08

Average SIR on DPCCH in the range -3.5..-3dB

Calculation

`pmAverageSir_16`

pmAverageSirP5MD_09

Average SIR on DPCCH in the range -3..-2.5dB

Calculation

`pmAverageSir_17`

pmAverageSirP5MD_10

Average SIR on DPCCH in the range -2.5..-2dB

Calculation

`pmAverageSir_18`

pmAverageSirP5MD_11

Average SIR on DPCCH in the range -2..-1.5dB

Calculation

`pmAverageSir_19`

pmAverageSirP5MD_12

Average SIR on DPCCH in the range -1.5..-1dB

Calculation

`pmAverageSir_20`

pmAverageSirP5MD_13

Average SIR on DPCCH in the range -1..-0.5dB

Calculation

`pmAverageSir_21`

pmAverageSirP5MD_14

Average SIR on DPCCH in the range -0.5..0dB

Calculation

`pmAverageSir_22`

pmAverageSirP5MD_15

Average SIR on DPCCH in the range 0..0.5dB

Calculation

`pmAverageSir_23`

pmAverageSirP5MD_16

Average SIR on DPCCH in the range 0.5..1dB

Calculation

`pmAverageSir_24`

pmAverageSirP5MD_17

Average SIR on DPCCH in the range 1..1.5dB

Calculation

`pmAverageSir_25`

pmAverageSirP5MD_18

Average SIR on DPCCH in the range 1.5..2dB

Calculation

`pmAverageSir_26`

pmAverageSirP5MD_19

Average SIR on DPCCH in the range 2..2.5dB

Calculation

`pmAverageSir_27`

pmAverageSirP5MD_20

Average SIR on DPCCH in the range 2.5..3dB

Calculation

`pmAverageSir_28`

pmAverageSirP5MD_21

Average SIR on DPCCH in the range 3..3.5dB

Calculation

`pmAverageSir_29`

pmAverageSirP5MD_22

Average SIR on DPCCH in the range 3.5..4dB

Calculation

`pmAverageSir_30`

pmAverageSirP5MD_23

Average SIR on DPCCH in the range 4..4.5dB

Calculation

`pmAverageSir_31`

pmAverageSirP5MD_24

Average SIR on DPCCH in the range 4.5..5dB

Calculation

`pmAverageSir_32`

pmAverageSirP5MD_25

Average SIR on DPCCH in the range 5..5.5dB

Calculation

`pmAverageSir_33`

pmAverageSirP5MD_26

Average SIR on DPCCH in the range 5.5..6dB

Calculation

`pmAverageSir_34`

pmAverageSirP5MD_27

Average SIR on DPCCH in the range 6..6.5dB

Calculation

`pmAverageSir_35`

pmAverageSirP5MD_28

Average SIR on DPCCH in the range 6.5..7dB

Calculation

`pmAverageSir_36`

pmAverageSirP5MD_29

Average SIR on DPCCH in the range 7..7.5dB

Calculation

`pmAverageSir_37`

pmAverageSirP5MD_30

Average SIR on DPCCH in the range 7.5..8dB

Calculation

`pmAverageSir_38`

pmAverageSirP5MD_31

Average SIR on DPCCH in the range 8..8.5dB

Calculation

`pmAverageSir_39`

pmAverageSirP5MD_32

Average SIR on DPCCH in the range 8.5..9dB

Calculation

`pmAverageSir_40`

pmAverageSirP5MD_33

Average SIR on DPCCH in the range 9..9.5dB

Calculation

`pmAverageSir_41`

pmAverageSirP5MD_34

Average SIR on DPCCH in the range 9.5..10dB

Calculation

`pmAverageSir_42`

pmAverageSirP5MD_35

Average SIR on DPCCH in the range 10..10.5dB

Calculation

`pmAverageSir_43`

pmAverageSirP5MD_36

Average SIR on DPCCH in the range 10.5..11dB

Calculation

```
pmAverageSir_44
```

RadioLinks Peg Counts

The following is a list of peg counts for the RadioLinks entity.

NodeB_RELEASE

Release

Data Source

NodeB_RNC_RXI

Source Section

RadioLinks

PERLENSEC

Period Length

Data Source

NodeB_RNC_RXI

Source Field

perlensec

Source Section

RadioLinks_WMGeneral

PERLENSEC_K

Period length in seconds aggregation summation in time domain and aggregation maximum between Network Elements.

Data Source

NodeB_RNC

Source Field

perlensec

Source Section

RadioLinks_WMGeneral

pmAverageSir_00

Average SIR on DPCCH.< -11dB (Measured on maximum 2 DPCCHs per RAX board)

Data Source

NodeB_RNC_RXI

Source Field

pmAverageSir

Source Section

RadioLinks

pmAverageSir_01

Average SIR on DPCCH.-11.0 to -10.5 dB (Measured on maximum 2 DPCCHs per RAX board)

Data Source

NodeB_RNC_RXI

Source Field

pmAverageSir

Source Section

RadioLinks

pmAverageSir_02

Average SIR on DPCCH.-10.5 to -10.0 dB (Measured on maximum 2 DPCCHs per RAX board)

Data Source

NodeB_RNC_RXI

Source Field

pmAverageSir

Source Section

RadioLinks

pmAverageSir_03

Average SIR on DPCCH.-10.0 to -9.5 dB (Measured on maximum 2 DPCCHs per RAX board)

Data Source

NodeB_RNC_RXI

Source Field

pmAverageSir

Source Section

RadioLinks

pmAverageSir_04

Average SIR on DPCCH.-9.5 to -9.0 dB (Measured on maximum 2 DPCCHs per RAX board)

Data Source

NodeB_RNC_RXI

Source Field

pmAverageSir

Source Section

RadioLinks

pmAverageSir_05

Average SIR on DPCCH.-9.0 to -8.5 dB (Measured on maximum 2 DPCCHs per RAX board)

Data Source

NodeB_RNC_RXI

Source Field

pmAverageSir

Source Section

RadioLinks

pmAverageSir_06

Average SIR on DPCCH.-8.5 to -8.0 dB (Measured on maximum 2 DPCCHs per RAX board)

Data Source

NodeB_RNC_RXI

Source Field

pmAverageSir

Source Section

RadioLinks

pmAverageSir_07

Average SIR on DPCCH.-8.0 to -7.5 dB (Measured on maximum 2 DPCCHs per RAX board)

Data Source

NodeB_RNC_RXI

Source Field

pmAverageSir

Source Section

RadioLinks

pmAverageSir_08

Average SIR on DPCCH.-7.5 to -7.0 dB (Measured on maximum 2 DPCCHs per RAX board)

Data Source

NodeB_RNC_RXI

Source Field

pmAverageSir

Source Section

RadioLinks

pmAverageSir_09

Average SIR on DPCCH.-7.0 to -6.5 dB (Measured on maximum 2 DPCCHs per RAX board)

Data Source

NodeB_RNC_RXI

Source Field

pmAverageSir

Source Section

RadioLinks

pmAverageSir_10

Average SIR on DPCCH.-6.5 to -6.0 dB (Measured on maximum 2 DPCCHs per RAX board)

Data Source

NodeB_RNC_RXI

Source Field

pmAverageSir

Source Section

RadioLinks

pmAverageSir_11

Average SIR on DPCCH.-6.0 to -5.5 dB (Measured on maximum 2 DPCCHs per RAX board)

Data Source

NodeB_RNC_RXI

Source Field

pmAverageSir

Source Section

RadioLinks

pmAverageSir_12

Average SIR on DPCCH.-5.5 to -5.0 dB (Measured on maximum 2 DPCCHs per RAX board)

Data Source

NodeB_RNC_RXI

Source Field

pmAverageSir

Source Section

RadioLinks

pmAverageSir_13

Average SIR on DPCCH.-5.0 to -4.5 dB (Measured on maximum 2 DPCCHs per RAX board)

Data Source

NodeB_RNC_RXI

Source Field

pmAverageSir

Source Section

RadioLinks

pmAverageSir_14

Average SIR on DPCCH.-4.5 to -4.0 dB (Measured on maximum 2 DPCCHs per RAX board)

Data Source

NodeB_RNC_RXI

Source Field

pmAverageSir

Source Section

RadioLinks

pmAverageSir_15

Average SIR on DPCCH.-4.0 to -3.5 dB (Measured on maximum 2 DPCCHs per RAX board)

Data Source

NodeB_RNC_RXI

Source Field

pmAverageSir

Source Section

RadioLinks

pmAverageSir_16

Average SIR on DPCCH.-3.5 to -3.0 dB (Measured on maximum 2 DPCCHs per RAX board)

Data Source

NodeB_RNC_RXI

Source Field

pmAverageSir

Source Section

RadioLinks

pmAverageSir_17

Average SIR on DPCCH.-3.0 to -2.5 dB (Measured on maximum 2 DPCCHs per RAX board)

Data Source

NodeB_RNC_RXI

Source Field

pmAverageSir

Source Section

RadioLinks

pmAverageSir_18

Average SIR on DPCCH.-2.5 to -2.0 dB (Measured on maximum 2 DPCCHs per RAX board)

Data Source

NodeB_RNC_RXI

Source Field

pmAverageSir

Source Section

RadioLinks

pmAverageSir_19

Average SIR on DPCCH.-2.0 to -1.5 dB (Measured on maximum 2 DPCCHs per RAX board)

Data Source

NodeB_RNC_RXI

Source Field

pmAverageSir

Source Section

RadioLinks

pmAverageSir_20

Average SIR on DPCCH.-1.5 to -1.0 dB (Measured on maximum 2 DPCCHs per RAX board)

Data Source

NodeB_RNC_RXI

Source Field

pmAverageSir

Source Section

RadioLinks

pmAverageSir_21

Average SIR on DPCCH.-1.0 to -0.5 dB (Measured on maximum 2 DPCCHs per RAX board)

Data Source

NodeB_RNC_RXI

Source Field

pmAverageSir

Source Section

RadioLinks

pmAverageSir_22

Average SIR on DPCCH.-0.5 to 0.0 dB (Measured on maximum 2 DPCCHs per RAX board)

Data Source

NodeB_RNC_RXI

Source Field

pmAverageSir

Source Section

RadioLinks

pmAverageSir_23

Average SIR on DPCCH.0.0 to 0.5 dB (Measured on maximum 2 DPCCHs per RAX board)

Data Source

NodeB_RNC_RXI

Source Field

pmAverageSir

Source Section

RadioLinks

pmAverageSir_24

Average SIR on DPCCH.0.5 to 1.0 dB (Measured on maximum 2 DPCCHs per RAX board)

Data Source

NodeB_RNC_RXI

Source Field

pmAverageSir

Source Section

RadioLinks

pmAverageSir_25

Average SIR on DPCCH.1.0 to 1.5 dB (Measured on maximum 2 DPCCHs per RAX board)

Data Source

NodeB_RNC_RXI

Source Field

pmAverageSir

Source Section

RadioLinks

pmAverageSir_26

Average SIR on DPCCH.1.5 to 2.0 dB (Measured on maximum 2 DPCCHs per RAX board)

Data Source

NodeB_RNC_RXI

Source Field

pmAverageSir

Source Section

RadioLinks

pmAverageSir_27

Average SIR on DPCCH.2.0 to 2.5 dB (Measured on maximum 2 DPCCHs per RAX board)

Data Source

NodeB_RNC_RXI

Source Field

pmAverageSir

Source Section

RadioLinks

pmAverageSir_28

Average SIR on DPCCH.2.5 to 3.0 dB (Measured on maximum 2 DPCCHs per RAX board)

Data Source

NodeB_RNC_RXI

Source Field

pmAverageSir

Source Section

RadioLinks

pmAverageSir_29

Average SIR on DPCCH.3.0 to 3.5 dB (Measured on maximum 2 DPCCHs per RAX board)

Data Source

NodeB_RNC_RXI

Source Field

pmAverageSir

Source Section

RadioLinks

pmAverageSir_30

Average SIR on DPCCH.3.5 to 4.0 dB (Measured on maximum 2 DPCCHs per RAX board)

Data Source

NodeB_RNC_RXI

Source Field

pmAverageSir

Source Section

RadioLinks

pmAverageSir_31

Average SIR on DPCCH.4.0 to 4.5 dB (Measured on maximum 2 DPCCHs per RAX board)

Data Source

NodeB_RNC_RXI

Source Field

pmAverageSir

Source Section

RadioLinks

pmAverageSir_32

Average SIR on DPCCH.4.5 to 5.0 dB (Measured on maximum 2 DPCCHs per RAX board)

Data Source

NodeB_RNC_RXI

Source Field

pmAverageSir

Source Section

RadioLinks

pmAverageSir_33

Average SIR on DPCCH.5.0 to 5.5 dB (Measured on maximum 2 DPCCHs per RAX board)

Data Source

NodeB_RNC_RXI

Source Field

pmAverageSir

Source Section

RadioLinks

pmAverageSir_34

Average SIR on DPCCH.5.5 to 6.0 dB (Measured on maximum 2 DPCCHs per RAX board)

Data Source

NodeB_RNC_RXI

Source Field

pmAverageSir

Source Section

RadioLinks

pmAverageSir_35

Average SIR on DPCCH.6.0 to 6.5 dB (Measured on maximum 2 DPCCHs per RAX board)

Data Source

NodeB_RNC_RXI

Source Field

pmAverageSir

Source Section

RadioLinks

pmAverageSir_36

Average SIR on DPCCH.6.5 to 7.0 dB (Measured on maximum 2 DPCCHs per RAX board)

Data Source

NodeB_RNC_RXI

Source Field

pmAverageSir

Source Section

RadioLinks

pmAverageSir_37

Average SIR on DPCCH.7.0 to 7.5 dB (Measured on maximum 2 DPCCHs per RAX board)

Data Source

NodeB_RNC_RXI

Source Field

pmAverageSir

Source Section

RadioLinks

pmAverageSir_38

Average SIR on DPCCH.7.5 to 8.0 dB (Measured on maximum 2 DPCCHs per RAX board)

Data Source

NodeB_RNC_RXI

Source Field

pmAverageSir

Source Section

RadioLinks

pmAverageSir_39

Average SIR on DPCCH.8.0 to 8.5 dB (Measured on maximum 2 DPCCHs per RAX board)

Data Source

NodeB_RNC_RXI

Source Field

pmAverageSir

Source Section

RadioLinks

pmAverageSir_40

Average SIR on DPCCH.8.5 to 9.0 dB (Measured on maximum 2 DPCCHs per RAX board)

Data Source

NodeB_RNC_RXI

Source Field

pmAverageSir

Source Section

RadioLinks

pmAverageSir_41

Average SIR on DPCCH.9.0 to 9.5 dB (Measured on maximum 2 DPCCHs per RAX board)

Data Source

NodeB_RNC_RXI

Source Field

pmAverageSir

Source Section

RadioLinks

pmAverageSir_42

Average SIR on DPCCH.9.5 to 10.0 dB (Measured on maximum 2 DPCCHs per RAX board)

Data Source

NodeB_RNC_RXI

Source Field

pmAverageSir

Source Section

RadioLinks

pmAverageSir_43

Average SIR on DPCCH.10.0 to 10.5 dB (Measured on maximum 2 DPCCHs per RAX board)

Data Source

NodeB_RNC_RXI

Source Field

pmAverageSir

Source Section

RadioLinks

pmAverageSir_44

Average SIR on DPCCH.10.5 to 11.0 dB (Measured on maximum 2 DPCCHs per RAX board)

Data Source

NodeB_RNC_RXI

Source Field

pmAverageSir

Source Section

RadioLinks

pmAverageSir_45

Average SIR on DPCCH.11.0 to 11.5 dB (Measured on maximum 2 DPCCHs per RAX board)

Data Source

NodeB_RNC_RXI

Source Field

pmAverageSir

Source Section

RadioLinks

pmAverageSir_46

Average SIR on DPCCH.11.5 to 12.0 dB (Measured on maximum 2 DPCCHs per RAX board)

Data Source

NodeB_RNC_RXI

Source Field

pmAverageSir

Source Section

RadioLinks

pmAverageSir_47

Average SIR on DPCCH.12.0 to 12.5 dB (Measured on maximum 2 DPCCHs per RAX board)

Data Source

NodeB_RNC_RXI

Source Field

pmAverageSir

Source Section

RadioLinks

pmAverageSir_48

Average SIR on DPCCH.12.5 to 13.0 dB (Measured on maximum 2 DPCCHs per RAX board)

Data Source

NodeB_RNC_RXI

Source Field

pmAverageSir

Source Section

RadioLinks

pmAverageSir_49

Average SIR on DPCCH.13.0 to 13.5 dB (Measured on maximum 2 DPCCHs per RAX board)

Data Source

NodeB_RNC_RXI

Source Field

pmAverageSir

Source Section

RadioLinks

pmAverageSir_50

Average SIR on DPCCH.13.5 to 14.0 dB (Measured on maximum 2 DPCCHs per RAX board)

Data Source

NodeB_RNC_RXI

Source Field

pmAverageSir

Source Section

RadioLinks

pmAverageSir_51

Average SIR on DPCCH.14.0 to 14.5 dB (Measured on maximum 2 DPCCHs per RAX board)

Data Source

NodeB_RNC_RXI

Source Field

pmAverageSir

Source Section

RadioLinks

pmAverageSir_52

Average SIR on DPCCH.14.5 to 15.0 dB (Measured on maximum 2 DPCCHs per RAX board)

Data Source

NodeB_RNC_RXI

Source Field

pmAverageSir

Source Section

RadioLinks

pmAverageSir_53

Average SIR on DPCCH.15.0 to 15.5 dB (Measured on maximum 2 DPCCHs per RAX board)

Data Source

NodeB_RNC_RXI

Source Field

pmAverageSir

Source Section

RadioLinks

pmAverageSir_54

Average SIR on DPCCH.15.5 to 16.0 dB (Measured on maximum 2 DPCCHs per RAX board)

Data Source

NodeB_RNC_RXI

Source Field

pmAverageSir

Source Section

RadioLinks

pmAverageSir_55

Average SIR on DPCCH.16.0 to 16.5 dB (Measured on maximum 2 DPCCHs per RAX board)

Data Source

NodeB_RNC_RXI

Source Field

pmAverageSir

Source Section

RadioLinks

pmAverageSir_56

Average SIR on DPCCH.16.5 to 17.0 dB (Measured on maximum 2 DPCCHs per RAX board)

Data Source

NodeB_RNC_RXI

Source Field

pmAverageSir

Source Section

RadioLinks

pmAverageSir_57

Average SIR on DPCCH.17.0 to 17.5 dB (Measured on maximum 2 DPCCHs per RAX board)

Data Source

NodeB_RNC_RXI

Source Field

pmAverageSir

Source Section

RadioLinks

pmAverageSir_58

Average SIR on DPCCH.17.5 to 18.0 dB (Measured on maximum 2 DPCCHs per RAX board)

Data Source

NodeB_RNC_RXI

Source Field

pmAverageSir

Source Section

RadioLinks

pmAverageSir_59

Average SIR on DPCCH.18.0 to 18.5 dB (Measured on maximum 2 DPCCHs per RAX board)

Data Source

NodeB_RNC_RXI

Source Field

pmAverageSir

Source Section

RadioLinks

pmAverageSir_60

Average SIR on DPCCH.18.5 to 19.0 dB (Measured on maximum 2 DPCCHs per RAX board)

Data Source

NodeB_RNC_RXI

Source Field

pmAverageSir

Source Section

RadioLinks

pmAverageSir_61

Average SIR on DPCCH.19.0 to 19.5 dB (Measured on maximum 2 DPCCHs per RAX board)

Data Source

NodeB_RNC_RXI

Source Field

pmAverageSir

Source Section

RadioLinks

pmAverageSir_62

Average SIR on DPCCH.19.5 to 20.0 dB (Measured on maximum 2 DPCCHs per RAX board)

Data Source

NodeB_RNC_RXI

Source Field

pmAverageSir

Source Section

RadioLinks

pmAverageSir_63

Average SIR on DPCCH greater or equal to 20 dB (Measured on maximum 2 DPCCHs per RAX board)

Data Source

NodeB_RNC_RXI

Source Field

pmAverageSir

Source Section

RadioLinks

pmAverageSirError_01

Average Sir_Error on DPCCH.-11.0 to -10.5 dB (Measured on maximum 2 DPCCHs per RAX board)

pmAverageSirError_02

Average Sir_Error on DPCCH.-10.5 to -10.0 dB (Measured on maximum 2 DPCCHs per RAX board)

pmAverageSirError_03

Average Sir_Error on DPCCH.-10.0 to -9.5 dB (Measured on maximum 2 DPCCHs per RAX board)

pmAverageSirError_04

Average Sir_Error on DPCCH.-9.5 to -9.0 dB (Measured on maximum 2 DPCCHs per RAX board)

pmAverageSirError_05

Average Sir_Error on DPCCH.-9.0 to -8.5 dB (Measured on maximum 2 DPCCHs per RAX board)

pmAverageSirError_06

Average Sir_Error on DPCCH.-8.5 to -8.0 dB (Measured on maximum 2 DPCCHs per RAX board)

pmAverageSirError_07

Average Sir_Error on DPCCH.-8.0 to -7.5 dB (Measured on maximum 2 DPCCHs per RAX board)

pmAverageSirError_08

Average Sir_Error on DPCCH.-7.5 to -7.0 dB (Measured on maximum 2 DPCCHs per RAX board)

pmAverageSirError_09

Average Sir_Error on DPCCH.-7.0 to -6.5 dB (Measured on maximum 2 DPCCHs per RAX board)

pmAverageSirError_10

Average Sir_Error on DPCCH.-6.5 to -6.0 dB (Measured on maximum 2 DPCCHs per RAX board)

pmAverageSirError_11

Average Sir_Error on DPCCH.-6.0 to -5.5 dB (Measured on maximum 2 DPCCHs per RAX board)

pmAverageSirError_12

Average Sir_Error on DPCCH.-5.5 to -5.0 dB (Measured on maximum 2 DPCCHs per RAX board)

pmAverageSirError_13

Average Sir_Error on DPCCH.-5.0 to -4.5 dB (Measured on maximum 2 DPCCHs per RAX board)

pmAverageSirError_14

Average Sir_Error on DPCCH.-4.5 to -4.0 dB (Measured on maximum 2 DPCCHs per RAX board)

pmAverageSirError_15

Average Sir_Error on DPCCH.-4.0 to -3.5 dB (Measured on maximum 2 DPCCHs per RAX board)

pmAverageSirError_16

Average Sir_Error on DPCCH.-3.5 to -3.0 dB (Measured on maximum 2 DPCCHs per RAX board)

pmAverageSirError_17

Average Sir_Error on DPCCH.-3.0 to -2.5 dB (Measured on maximum 2 DPCCHs per RAX board)

pmAverageSirError_18

Average Sir_Error on DPCCH.-2.5 to -2.0 dB (Measured on maximum 2 DPCCHs per RAX board)

pmAverageSirError_19

Average Sir_Error on DPCCH.-2.0 to -1.5 dB (Measured on maximum 2 DPCCHs per RAX board)

pmAverageSirError_20

Average Sir_Error on DPCCH.-1.5 to -1.0 dB (Measured on maximum 2 DPCCHs per RAX board)

pmAverageSirError_21

Average Sir_Error on DPCCH.-1.0 to -0.5 dB (Measured on maximum 2 DPCCHs per RAX board)

pmAverageSirError_22

Average Sir_Error on DPCCH.-0.5 to 0.0 dB (Measured on maximum 2 DPCCHs per RAX board)

pmAverageSirError_23

Average Sir_Error on DPCCH.0.0 to 0.5 dB (Measured on maximum 2 DPCCHs per RAX board)

pmAverageSirError_24

Average Sir_Error on DPCCH.0.5 to 1.0 dB (Measured on maximum 2 DPCCHs per RAX board)

pmAverageSirError_25

Average Sir_Error on DPCCH.1.0 to 1.5 dB (Measured on maximum 2 DPCCHs per RAX board)

pmAverageSirError_26

Average Sir_Error on DPCCH.1.5 to 2.0 dB (Measured on maximum 2 DPCCHs per RAX board)

pmAverageSirError_27

Average Sir_Error on DPCCH.2.0 to 2.5 dB (Measured on maximum 2 DPCCHs per RAX board)

pmAverageSirError_28

Average Sir_Error on DPCCH.2.5 to 3.0 dB (Measured on maximum 2 DPCCHs per RAX board)

pmAverageSirError_29

Average Sir_Error on DPCCH.3.0 to 3.5 dB (Measured on maximum 2 DPCCHs per RAX board)

pmAverageSirError_30

Average Sir_Error on DPCCH.3.5 to 4.0 dB (Measured on maximum 2 DPCCHs per RAX board)

pmAverageSirError_31

Average Sir_Error on DPCCH.4.0 to 4.5 dB (Measured on maximum 2 DPCCHs per RAX board)

pmAverageSirError_32

Average Sir_Error on DPCCH.4.5 to 5.0 dB (Measured on maximum 2 DPCCHs per RAX board)

pmAverageSirError_33

Average Sir_Error on DPCCH.5.0 to 5.5 dB (Measured on maximum 2 DPCCHs per RAX board)

pmAverageSirError_34

Average Sir_Error on DPCCH.5.5 to 6.0 dB (Measured on maximum 2 DPCCHs per RAX board)

pmAverageSirError_35

Average Sir_Error on DPCCH.6.0 to 6.5 dB (Measured on maximum 2 DPCCHs per RAX board)

pmAverageSirError_36

Average Sir_Error on DPCCH.6.5 to 7.0 dB (Measured on maximum 2 DPCCHs per RAX board)

pmAverageSirError_37

Average Sir_Error on DPCCH.7.0 to 7.5 dB (Measured on maximum 2 DPCCHs per RAX board)

pmAverageSirError_38

Average Sir_Error on DPCCH.7.5 to 8.0 dB (Measured on maximum 2 DPCCHs per RAX board)

pmAverageSirError_39

Average Sir_Error on DPCCH.8.0 to 8.5 dB (Measured on maximum 2 DPCCHs per RAX board)

pmAverageSirError_40

Average Sir_Error on DPCCH.8.5 to 9.0 dB (Measured on maximum 2 DPCCHs per RAX board)

pmAverageSirError_41

Average Sir_Error on DPCCH.9.0 to 9.5 dB (Measured on maximum 2 DPCCHs per RAX board)

pmAverageSirError_42

Average Sir_Error on DPCCH.9.5 to 10.0 dB (Measured on maximum 2 DPCCHs per RAX board)

pmAverageSirError_43

Average Sir_Error on DPCCH.10.0 to 10.5 dB (Measured on maximum 2 DPCCHs per RAX board)

pmAverageSirError_44

Average Sir_Error on DPCCH.10.5 to 11.0 dB (Measured on maximum 2 DPCCHs per RAX board)

pmAverageSirError_45

Average Sir_Error on DPCCH.11.0 to 11.5 dB (Measured on maximum 2 DPCCHs per RAX board)

pmAverageSirError_46

Average Sir_Error on DPCCH.11.5 to 12.0 dB (Measured on maximum 2 DPCCHs per RAX board)

pmAverageSirError_47

Average Sir_Error on DPCCH.12.0 to 12.5 dB (Measured on maximum 2 DPCCHs per RAX board)

pmAverageSirError_48

Average Sir_Error on DPCCH.12.5 to 13.0 dB (Measured on maximum 2 DPCCHs per RAX board)

pmAverageSirError_49

Average Sir_Error on DPCCH.13.0 to 13.5 dB (Measured on maximum 2 DPCCHs per RAX board)

pmAverageSirError_50

Average Sir_Error on DPCCH.13.5 to 14.0 dB (Measured on maximum 2 DPCCHs per RAX board)

pmAverageSirError_51

Average Sir_Error on DPCCH.14.0 to 14.5 dB (Measured on maximum 2 DPCCHs per RAX board)

pmAverageSirError_52

Average Sir_Error on DPCCH.14.5 to 15.0 dB (Measured on maximum 2 DPCCHs per RAX board)

pmAverageSirError_53

Average Sir_Error on DPCCH.15.0 to 15.5 dB (Measured on maximum 2 DPCCHs per RAX board)

pmAverageSirError_54

Average Sir_Error on DPCCH.15.5 to 16.0 dB (Measured on maximum 2 DPCCHs per RAX board)

pmAverageSirError_55

Average Sir_Error on DPCCH.16.0 to 16.5 dB (Measured on maximum 2 DPCCHs per RAX board)

pmAverageSirError_56

Average Sir_Error on DPCCH.16.5 to 17.0 dB (Measured on maximum 2 DPCCHs per RAX board)

pmAverageSirError_57

Average Sir_Error on DPCCH.17.0 to 17.5 dB (Measured on maximum 2 DPCCHs per RAX board)

pmAverageSirError_58

Average Sir_Error on DPCCH.17.5 to 18.0 dB (Measured on maximum 2 DPCCHs per RAX board)

pmAverageSirError_59

Average Sir_Error on DPCCH.18.0 to 18.5 dB (Measured on maximum 2 DPCCHs per RAX board)

pmAverageSirError_60

Average Sir_Error on DPCCH.18.5 to 19.0 dB (Measured on maximum 2 DPCCHs per RAX board)

pmAverageSirError_61

Average Sir_Error on DPCCH.19.0 to 19.5 dB (Measured on maximum 2 DPCCHs per RAX board)

pmAverageSirError_62

Average Sir_Error on DPCCH.19.5 to 20.0 dB (Measured on maximum 2 DPCCHs per RAX board)

pmAverageSirError_63

Average Sir_Error on DPCCH greater or equal to 20 dB (Measured on maximum 2 DPCCHs per RAX board)

pmAverageSirErrorP5MD_00

The average SIR error on DPCCH physical channel. SIR error is the difference between the measured SIR and SIR target. In order to control load, number of measurements are restricted per RAXB. Maximum number of measurements are 10 % of the maximum number of CEs per RAXB. Number of sampled values in range < -10 dB

Data Source

NodeB

Source Field

pmAverageSirError

Source Section

RadioLinks

pmAverageSirErrorP5MD_41

The average SIR error on DPCCH physical channel. SIR error is the difference between the measured SIR and SIR target. In order to control load, number of measurements are restricted per RAXB. Maximum number of measurements are 10 % of the maximum number of CEs per RAXB. Number of sampled values in range >= 10 dB

Data Source

NodeB

Source Field

pmAverageSirError

Source Section

RadioLinks

pmAverageSirP5MD_00

Average SIR on DPCCH in the range < -7dB

Data Source

NodeB_RNC_RXI

Source Field

pmAverageSir

Source Section

RadioLinks

pmAverageSirP5MD_37

Average SIR on DPCCH in the range >= 11dB

Data Source

NodeB_RNC_RXI

Source Field

pmAverageSir

Source Section

RadioLinks

pmBranchDeltaSir_00

The difference in SIR per receive branch per connection (DPCCH) per cell. The purpose with the measurement is to detect faulty feeder installations. SIR sample in range =<-29.5 dB

Data Source

NodeB_RNC_RXI

Source Field

pmBranchDeltaSir

Source Section

RadioLinks

pmBranchDeltaSir_01

The difference in SIR per receive branch per connection (DPCCH) per cell. The purpose with the measurement is to detect faulty feeder installations. SIR sample in range -29.5..-28.5 dB

Data Source

NodeB_RNC_RXI

Source Field

pmBranchDeltaSir

Source Section

RadioLinks

pmBranchDeltaSir_02

The difference in SIR per receive branch per connection (DPCCH) per cell. The purpose with the measurement is to detect faulty feeder installations. SIR sample in range -28.5..-27.5 dB

Data Source

NodeB_RNC_RXI

Source Field

pmBranchDeltaSir

Source Section

RadioLinks

pmBranchDeltaSir_03

The difference in SIR per receive branch per connection (DPCCH) per cell. The purpose with the measurement is to detect faulty feeder installations. SIR sample in range -27.5..-26.5 dB

Data Source

NodeB_RNC_RXI

Source Field

pmBranchDeltaSir

Source Section

RadioLinks

pmBranchDeltaSir_04

The difference in SIR per receive branch per connection (DPCCH) per cell. The purpose with the measurement is to detect faulty feeder installations. SIR sample in range -26.5..-25.5 dB

Data Source

NodeB_RNC_RXI

Source Field

pmBranchDeltaSir

Source Section

RadioLinks

pmBranchDeltaSir_05

The difference in SIR per receive branch per connection (DPCCH) per cell. The purpose with the measurement is to detect faulty feeder installations. SIR sample in range -25.5..-24.5 dB

Data Source

NodeB_RNC_RXI

Source Field

pmBranchDeltaSir

Source Section

RadioLinks

pmBranchDeltaSir_06

The difference in SIR per receive branch per connection (DPCCH) per cell. The purpose with the measurement is to detect faulty feeder installations. SIR sample in range -24.5..-23.5 dB

Data Source

NodeB_RNC_RXI

Source Field

pmBranchDeltaSir

Source Section

RadioLinks

pmBranchDeltaSir_07

The difference in SIR per receive branch per connection (DPCCH) per cell. The purpose with the measurement is to detect faulty feeder installations. SIR sample in range -23.5..-22.5 dB

Data Source

NodeB_RNC_RXI

Source Field

pmBranchDeltaSir

Source Section

RadioLinks

pmBranchDeltaSir_08

The difference in SIR per receive branch per connection (DPCCH) per cell. The purpose with the measurement is to detect faulty feeder installations. SIR sample in range -22.5..-21.5 dB

Data Source

NodeB_RNC_RXI

Source Field

pmBranchDeltaSir

Source Section

RadioLinks

pmBranchDeltaSir_09

The difference in SIR per receive branch per connection (DPCCH) per cell. The purpose with the measurement is to detect faulty feeder installations. SIR sample in range -21.5..-20.5 dB

Data Source

NodeB_RNC_RXI

Source Field

pmBranchDeltaSir

Source Section

RadioLinks

pmBranchDeltaSir_10

The difference in SIR per receive branch per connection (DPCCH) per cell. The purpose with the measurement is to detect faulty feeder installations. SIR sample in range -20.5..-19.5 dB

Data Source

NodeB_RNC_RXI

Source Field

pmBranchDeltaSir

Source Section

RadioLinks

pmBranchDeltaSir_11

The difference in SIR per receive branch per connection (DPCCH) per cell. The purpose with the measurement is to detect faulty feeder installations. SIR sample in range -19.5..-18.5 dB

Data Source

NodeB_RNC_RXI

Source Field

pmBranchDeltaSir

Source Section

RadioLinks

pmBranchDeltaSir_12

The difference in SIR per receive branch per connection (DPCCH) per cell. The purpose with the measurement is to detect faulty feeder installations. SIR sample in range -18.5..-17.5 dB

Data Source

NodeB_RNC_RXI

Source Field

pmBranchDeltaSir

Source Section

RadioLinks

pmBranchDeltaSir_13

The difference in SIR per receive branch per connection (DPCCH) per cell. The purpose with the measurement is to detect faulty feeder installations. SIR sample in range -17.5..-16.5 dB

Data Source

NodeB_RNC_RXI

Source Field

pmBranchDeltaSir

Source Section

RadioLinks

pmBranchDeltaSir_14

The difference in SIR per receive branch per connection (DPCCH) per cell. The purpose with the measurement is to detect faulty feeder installations. SIR sample in range -16.5..-15.5 dB

Data Source

NodeB_RNC_RXI

Source Field

pmBranchDeltaSir

Source Section

RadioLinks

pmBranchDeltaSir_15

The difference in SIR per receive branch per connection (DPCCH) per cell. The purpose with the measurement is to detect faulty feeder installations. SIR sample in range -15.5..-14.5 dB

Data Source

NodeB_RNC_RXI

Source Field

pmBranchDeltaSir

Source Section

RadioLinks

pmBranchDeltaSir_16

The difference in SIR per receive branch per connection (DPCCH) per cell. The purpose with the measurement is to detect faulty feeder installations. SIR sample in range -14.5..-13.5 dB

Data Source

NodeB_RNC_RXI

Source Field

pmBranchDeltaSir

Source Section

RadioLinks

pmBranchDeltaSir_17

The difference in SIR per receive branch per connection (DPCCH) per cell. The purpose with the measurement is to detect faulty feeder installations. SIR sample in range -13.5..-12.5 dB

Data Source

NodeB_RNC_RXI

Source Field

pmBranchDeltaSir

Source Section

RadioLinks

pmBranchDeltaSir_18

The difference in SIR per receive branch per connection (DPCCH) per cell. The purpose with the measurement is to detect faulty feeder installations. SIR sample in range -12.5..-11.5 dB

Data Source

NodeB_RNC_RXI

Source Field

pmBranchDeltaSir

Source Section

RadioLinks

pmBranchDeltaSir_19

The difference in SIR per receive branch per connection (DPCCH) per cell. The purpose with the measurement is to detect faulty feeder installations. SIR sample in range -11.5..-10.5 dB

Data Source

NodeB_RNC_RXI

Source Field

pmBranchDeltaSir

Source Section

RadioLinks

pmBranchDeltaSir_20

The difference in SIR per receive branch per connection (DPCCH) per cell. The purpose with the measurement is to detect faulty feeder installations. SIR sample in range -10.5..-9.5 dB

Data Source

NodeB_RNC_RXI

Source Field

pmBranchDeltaSir

Source Section

RadioLinks

pmBranchDeltaSir_21

The difference in SIR per receive branch per connection (DPCCH) per cell. The purpose with the measurement is to detect faulty feeder installations. SIR sample in range -9.5..-8.5 dB

Data Source

NodeB_RNC_RXI

Source Field

pmBranchDeltaSir

Source Section

RadioLinks

pmBranchDeltaSir_22

The difference in SIR per receive branch per connection (DPCCH) per cell. The purpose with the measurement is to detect faulty feeder installations. SIR sample in range -8.5..-7.5 dB

Data Source

NodeB_RNC_RXI

Source Field

pmBranchDeltaSir

Source Section

RadioLinks

pmBranchDeltaSir_23

The difference in SIR per receive branch per connection (DPCCH) per cell. The purpose with the measurement is to detect faulty feeder installations. SIR sample in range -7.5..-6.5 dB

Data Source

NodeB_RNC_RXI

Source Field

pmBranchDeltaSir

Source Section

RadioLinks

pmBranchDeltaSir_24

The difference in SIR per receive branch per connection (DPCCH) per cell. The purpose with the measurement is to detect faulty feeder installations. SIR sample in range -6.5..-5.5 dB

Data Source

NodeB_RNC_RXI

Source Field

pmBranchDeltaSir

Source Section

RadioLinks

pmBranchDeltaSir_25

The difference in SIR per receive branch per connection (DPCCH) per cell. The purpose with the measurement is to detect faulty feeder installations. SIR sample in range -5.5..-4.5 dB

Data Source

NodeB_RNC_RXI

Source Field

pmBranchDeltaSir

Source Section

RadioLinks

pmBranchDeltaSir_26

The difference in SIR per receive branch per connection (DPCCH) per cell. The purpose with the measurement is to detect faulty feeder installations. SIR sample in range -4.5..-3.5 dB

Data Source

NodeB_RNC_RXI

Source Field

pmBranchDeltaSir

Source Section

RadioLinks

pmBranchDeltaSir_27

The difference in SIR per receive branch per connection (DPCCH) per cell. The purpose with the measurement is to detect faulty feeder installations. SIR sample in range -3.5..-2.5 dB

Data Source

NodeB_RNC_RXI

Source Field

pmBranchDeltaSir

Source Section

RadioLinks

pmBranchDeltaSir_28

The difference in SIR per receive branch per connection (DPCCH) per cell. The purpose with the measurement is to detect faulty feeder installations. SIR sample in range -2.5..-1.5 dB

Data Source

NodeB_RNC_RXI

Source Field

pmBranchDeltaSir

Source Section

RadioLinks

pmBranchDeltaSir_29

The difference in SIR per receive branch per connection (DPCCH) per cell. The purpose with the measurement is to detect faulty feeder installations. SIR sample in range -1.5..-0.5 dB

Data Source

NodeB_RNC_RXI

Source Field

pmBranchDeltaSir

Source Section

RadioLinks

pmBranchDeltaSir_30

The difference in SIR per receive branch per connection (DPCCH) per cell. The purpose with the measurement is to detect faulty feeder installations. SIR sample in range -0.5..0.5 dB

Data Source

NodeB_RNC_RXI

Source Field

pmBranchDeltaSir

Source Section

RadioLinks

pmBranchDeltaSir_31

The difference in SIR per receive branch per connection (DPCCH) per cell. The purpose with the measurement is to detect faulty feeder installations. SIR sample in range 0.5..1.5 dB

Data Source

NodeB_RNC_RXI

Source Field

pmBranchDeltaSir

Source Section

RadioLinks

pmBranchDeltaSir_32

The difference in SIR per receive branch per connection (DPCCH) per cell. The purpose with the measurement is to detect faulty feeder installations. SIR sample in range 1.5..2.5 dB

Data Source

NodeB_RNC_RXI

Source Field

pmBranchDeltaSir

Source Section

RadioLinks

pmBranchDeltaSir_33

The difference in SIR per receive branch per connection (DPCCH) per cell. The purpose with the measurement is to detect faulty feeder installations. SIR sample in range 2.5..3.5 dB

Data Source

NodeB_RNC_RXI

Source Field

pmBranchDeltaSir

Source Section

RadioLinks

pmBranchDeltaSir_34

The difference in SIR per receive branch per connection (DPCCH) per cell. The purpose with the measurement is to detect faulty feeder installations. SIR sample in range 3.5..4.5 dB

Data Source

NodeB_RNC_RXI

Source Field

pmBranchDeltaSir

Source Section

RadioLinks

pmBranchDeltaSir_35

The difference in SIR per receive branch per connection (DPCCH) per cell. The purpose with the measurement is to detect faulty feeder installations. SIR sample in range 4.5..5.5 dB

Data Source

NodeB_RNC_RXI

Source Field

pmBranchDeltaSir

Source Section

RadioLinks

pmBranchDeltaSir_36

The difference in SIR per receive branch per connection (DPCCH) per cell. The purpose with the measurement is to detect faulty feeder installations. SIR sample in range 5.5..6.5 dB

Data Source

NodeB_RNC_RXI

Source Field

pmBranchDeltaSir

Source Section

RadioLinks

pmBranchDeltaSir_37

The difference in SIR per receive branch per connection (DPCCH) per cell. The purpose with the measurement is to detect faulty feeder installations. SIR sample in range 6.5..7.5 dB

Data Source

NodeB_RNC_RXI

Source Field

pmBranchDeltaSir

Source Section

RadioLinks

pmBranchDeltaSir_38

The difference in SIR per receive branch per connection (DPCCH) per cell. The purpose with the measurement is to detect faulty feeder installations. SIR sample in range 7.5..8.5 dB

Data Source

NodeB_RNC_RXI

Source Field

pmBranchDeltaSir

Source Section

RadioLinks

pmBranchDeltaSir_39

The difference in SIR per receive branch per connection (DPCCH) per cell. The purpose with the measurement is to detect faulty feeder installations. SIR sample in range 8.5..9.5 dB

Data Source

NodeB_RNC_RXI

Source Field

pmBranchDeltaSir

Source Section

RadioLinks

pmBranchDeltaSir_40

The difference in SIR per receive branch per connection (DPCCH) per cell. The purpose with the measurement is to detect faulty feeder installations. SIR sample in range 9.5..10.5 dB

Data Source

NodeB_RNC_RXI

Source Field

pmBranchDeltaSir

Source Section

RadioLinks

pmBranchDeltaSir_41

The difference in SIR per receive branch per connection (DPCCH) per cell. The purpose with the measurement is to detect faulty feeder installations. SIR sample in range 10.5..11.5 dB

Data Source

NodeB_RNC_RXI

Source Field

pmBranchDeltaSir

Source Section

RadioLinks

pmBranchDeltaSir_42

The difference in SIR per receive branch per connection (DPCCH) per cell. The purpose with the measurement is to detect faulty feeder installations. SIR sample in range 11.5..12.5 dB

Data Source

NodeB_RNC_RXI

Source Field

pmBranchDeltaSir

Source Section

RadioLinks

pmBranchDeltaSir_43

The difference in SIR per receive branch per connection (DPCCH) per cell. The purpose with the measurement is to detect faulty feeder installations. SIR sample in range 12.5..13.5 dB

Data Source

NodeB_RNC_RXI

Source Field

pmBranchDeltaSir

Source Section

RadioLinks

pmBranchDeltaSir_44

The difference in SIR per receive branch per connection (DPCCH) per cell. The purpose with the measurement is to detect faulty feeder installations. SIR sample in range 13.5..14.5 dB

Data Source

NodeB_RNC_RXI

Source Field

pmBranchDeltaSir

Source Section

RadioLinks

pmBranchDeltaSir_45

The difference in SIR per receive branch per connection (DPCCH) per cell. The purpose with the measurement is to detect faulty feeder installations. SIR sample in range 14.5..15.5 dB

Data Source

NodeB_RNC_RXI

Source Field

pmBranchDeltaSir

Source Section

RadioLinks

pmBranchDeltaSir_46

The difference in SIR per receive branch per connection (DPCCH) per cell. The purpose with the measurement is to detect faulty feeder installations. SIR sample in range 15.5..16.5 dB

Data Source

NodeB_RNC_RXI

Source Field

pmBranchDeltaSir

Source Section

RadioLinks

pmBranchDeltaSir_47

The difference in SIR per receive branch per connection (DPCCH) per cell. The purpose with the measurement is to detect faulty feeder installations. SIR sample in range 16.5..17.5 dB

Data Source

NodeB_RNC_RXI

Source Field

pmBranchDeltaSir

Source Section

RadioLinks

pmBranchDeltaSir_48

The difference in SIR per receive branch per connection (DPCCH) per cell. The purpose with the measurement is to detect faulty feeder installations. SIR sample in range 17.5..18.5 dB

Data Source

NodeB_RNC_RXI

Source Field

pmBranchDeltaSir

Source Section

RadioLinks

pmBranchDeltaSir_49

The difference in SIR per receive branch per connection (DPCCH) per cell. The purpose with the measurement is to detect faulty feeder installations. SIR sample in range 18.5..19.5 dB

Data Source

NodeB_RNC_RXI

Source Field

pmBranchDeltaSir

Source Section

RadioLinks

pmBranchDeltaSir_50

The difference in SIR per receive branch per connection (DPCCH) per cell. The purpose with the measurement is to detect faulty feeder installations. SIR sample in range 19.5..20.5 dB

Data Source

NodeB_RNC_RXI

Source Field

pmBranchDeltaSir

Source Section

RadioLinks

pmBranchDeltaSir_51

The difference in SIR per receive branch per connection (DPCCH) per cell. The purpose with the measurement is to detect faulty feeder installations. SIR sample in range 20.5..21.5 dB

Data Source

NodeB_RNC_RXI

Source Field

pmBranchDeltaSir

Source Section

RadioLinks

pmBranchDeltaSir_52

The difference in SIR per receive branch per connection (DPCCH) per cell. The purpose with the measurement is to detect faulty feeder installations. SIR sample in range 21.5..22.5 dB

Data Source

NodeB_RNC_RXI

Source Field

pmBranchDeltaSir

Source Section

RadioLinks

pmBranchDeltaSir_53

The difference in SIR per receive branch per connection (DPCCH) per cell. The purpose with the measurement is to detect faulty feeder installations. SIR sample in range 22.5..23.5 dB

Data Source

NodeB_RNC_RXI

Source Field

pmBranchDeltaSir

Source Section

RadioLinks

pmBranchDeltaSir_54

The difference in SIR per receive branch per connection (DPCCH) per cell. The purpose with the measurement is to detect faulty feeder installations. SIR sample in range 23.5..24.5 dB

Data Source

NodeB_RNC_RXI

Source Field

pmBranchDeltaSir

Source Section

RadioLinks

pmBranchDeltaSir_55

The difference in SIR per receive branch per connection (DPCCH) per cell. The purpose with the measurement is to detect faulty feeder installations. SIR sample in range 24.5..25.5 dB

Data Source

NodeB_RNC_RXI

Source Field

pmBranchDeltaSir

Source Section

RadioLinks

pmBranchDeltaSir_56

The difference in SIR per receive branch per connection (DPCCH) per cell. The purpose with the measurement is to detect faulty feeder installations. SIR sample in range 25.5..26.5 dB

Data Source

NodeB_RNC_RXI

Source Field

pmBranchDeltaSir

Source Section

RadioLinks

pmBranchDeltaSir_57

The difference in SIR per receive branch per connection (DPCCH) per cell. The purpose with the measurement is to detect faulty feeder installations. SIR sample in range 26.5..27.5 dB

Data Source

NodeB_RNC_RXI

Source Field

pmBranchDeltaSir

Source Section

RadioLinks

pmBranchDeltaSir_58

The difference in SIR per receive branch per connection (DPCCH) per cell. The purpose with the measurement is to detect faulty feeder installations. SIR sample in range 27.5..28.5 dB

Data Source

NodeB_RNC_RXI

Source Field

pmBranchDeltaSir

Source Section

RadioLinks

pmBranchDeltaSir_59

The difference in SIR per receive branch per connection (DPCCH) per cell. The purpose with the measurement is to detect faulty feeder installations. SIR sample in range 28.5..29.5 dB

Data Source

NodeB_RNC_RXI

Source Field

pmBranchDeltaSir

Source Section

RadioLinks

pmBranchDeltaSir_60

The difference in SIR per receive branch per connection (DPCCH) per cell. The purpose with the measurement is to detect faulty feeder installations. SIR sample in range >=29.5 dB

Data Source

NodeB_RNC_RXI

Source Field

pmBranchDeltaSir

Source Section

RadioLinks

pmDpcchBer_000

Average BER_dB estimate = 0 on DPCCH calculated as Log10(BER)

Data Source

NodeB_RNC_RXI

Source Field

pmDpcchBer

Source Section

RadioLinks

pmDpcchBer_001

Average BER_dB estimate < -2.06375 on DPCCH calculated as Log10(BER)

Data Source

NodeB_RNC_RXI

Source Field

pmDpcchBer

Source Section

RadioLinks

pmDpcchBer_002

Average BER_dB estimate = -2.06375..-2.04750 on DPCCH calculated as Log10(BER)

Data Source

NodeB_RNC_RXI

Source Field

pmDpcchBer

Source Section

RadioLinks

pmDpcchBer_003

Average BER_dB estimate = -2.04750..-2.03125 on DPCCH calculated as Log10(BER)

Data Source

NodeB_RNC_RXI

Source Field

pmDpcchBer

Source Section

RadioLinks

pmDpcchBer_004

Average BER_dB estimate = -2.03125..-2.01500 on DPCCH calculated as Log10(BER)

Data Source

NodeB_RNC_RXI

Source Field

pmDpcchBer

Source Section

RadioLinks

pmDpcchBer_005

Average BER_dB estimate = -2.01500..-1.99875 on DPCCH calculated as Log10(BER)

Data Source

NodeB_RNC_RXI

Source Field

pmDpcchBer

Source Section

RadioLinks

pmDpcchBer_006

Average BER_dB estimate = -1.99875..-1.98250 on DPCCH calculated as Log10(BER)

Data Source

NodeB_RNC_RXI

Source Field

pmDpcchBer

Source Section

RadioLinks

pmDpcchBer_007

Average BER_dB estimate = -1.98250..-1.96625 on DPCCH calculated as Log10(BER)

Data Source

NodeB_RNC_RXI

Source Field

pmDpcchBer

Source Section

RadioLinks

pmDpcchBer_008

Average BER_dB estimate = -1.96625..-1.95000 on DPCCH calculated as Log10(BER)

Data Source

NodeB_RNC_RXI

Source Field

pmDpcchBer

Source Section

RadioLinks

pmDpcchBer_009

Average BER_dB estimate = -1.95000..-1.93375 on DPCCH calculated as Log10(BER)

Data Source

NodeB_RNC_RXI

Source Field

pmDpcchBer

Source Section

RadioLinks

pmDpcchBer_010

Average BER_dB estimate = -1.93375..-1.91750 on DPCCH calculated as Log10(BER)

Data Source

NodeB_RNC_RXI

Source Field

pmDpcchBer

Source Section

RadioLinks

pmDpcchBer_011

Average BER_dB estimate = -1.91750..-1.90125 on DPCCH calculated as Log10(BER)

Data Source

NodeB_RNC_RXI

Source Field

pmDpcchBer

Source Section

RadioLinks

pmDpcchBer_012

Average BER_dB estimate = -1.90125..-1.88500 on DPCCH calculated as Log10(BER)

Data Source

NodeB_RNC_RXI

Source Field

pmDpcchBer

Source Section

RadioLinks

pmDpcchBer_013

Average BER_dB estimate = -1.88500..-1.86875 on DPCCH calculated as Log10(BER)

Data Source

NodeB_RNC_RXI

Source Field

pmDpcchBer

Source Section

RadioLinks

pmDpcchBer_014

Average BER_dB estimate = -1.86875..-1.85250 on DPCCH calculated as Log10(BER)

Data Source

NodeB_RNC_RXI

Source Field

pmDpcchBer

Source Section

RadioLinks

pmDpcchBer_015

Average BER_dB estimate = -1.85250..-1.83625 on DPCCH calculated as Log10(BER)

Data Source

NodeB_RNC_RXI

Source Field

pmDpcchBer

Source Section

RadioLinks

pmDpcchBer_016

Average BER_dB estimate = -1.83625..-1.82000 on DPCCH calculated as Log10(BER)

Data Source

NodeB_RNC_RXI

Source Field

pmDpcchBer

Source Section

RadioLinks

pmDpcchBer_017

Average BER_dB estimate = -1.82000..-1.80375 on DPCCH calculated as Log10(BER)

Data Source

NodeB_RNC_RXI

Source Field

pmDpcchBer

Source Section

RadioLinks

pmDpcchBer_018

Average BER_dB estimate = -1.80375..-1.78750 on DPCCH calculated as Log10(BER)

Data Source

NodeB_RNC_RXI

Source Field

pmDpcchBer

Source Section

RadioLinks

pmDpcchBer_019

Average BER_dB estimate = -1.78750..-1.77125 on DPCCH calculated as Log10(BER)

Data Source

NodeB_RNC_RXI

Source Field

pmDpcchBer

Source Section

RadioLinks

pmDpcchBer_020

Average BER_dB estimate = -1.77125..-1.75500 on DPCCH calculated as Log10(BER)

Data Source

NodeB_RNC_RXI

Source Field

pmDpcchBer

Source Section

RadioLinks

pmDpcchBer_021

Average BER_dB estimate = -1.75500..-1.73875 on DPCCH calculated as Log10(BER)

Data Source

NodeB_RNC_RXI

Source Field

pmDpcchBer

Source Section

RadioLinks

pmDpcchBer_022

Average BER_dB estimate = -1.73875..-1.72250 on DPCCH calculated as Log10(BER)

Data Source

NodeB_RNC_RXI

Source Field

pmDpcchBer

Source Section

RadioLinks

pmDpcchBer_023

Average BER_dB estimate = -1.72250..-1.70625 on DPCCH calculated as Log10(BER)

Data Source

NodeB_RNC_RXI

Source Field

pmDpcchBer

Source Section

RadioLinks

pmDpcchBer_024

Average BER_dB estimate = -1.70625..-1.69000 on DPCCH calculated as Log10(BER)

Data Source

NodeB_RNC_RXI

Source Field

pmDpcchBer

Source Section

RadioLinks

pmDpcchBer_025

Average BER_dB estimate = -1.69000..-1.67375 on DPCCH calculated as Log10(BER)

Data Source

NodeB_RNC_RXI

Source Field

pmDpcchBer

Source Section

RadioLinks

pmDpcchBer_026

Average BER_dB estimate = -1.67375..-1.65750 on DPCCH calculated as Log10(BER)

Data Source

NodeB_RNC_RXI

Source Field

pmDpcchBer

Source Section

RadioLinks

pmDpcchBer_027

Average BER_dB estimate = -1.65750..-1.64125 on DPCCH calculated as Log10(BER)

Data Source

NodeB_RNC_RXI

Source Field

pmDpcchBer

Source Section

RadioLinks

pmDpcchBer_028

Average BER_dB estimate = -1.64125..-1.62500 on DPCCH calculated as Log10(BER)

Data Source

NodeB_RNC_RXI

Source Field

pmDpcchBer

Source Section

RadioLinks

pmDpcchBer_029

Average BER_dB estimate = -1.62500..-1.60875 on DPCCH calculated as Log10(BER)

Data Source

NodeB_RNC_RXI

Source Field

pmDpcchBer

Source Section

RadioLinks

pmDpcchBer_030

Average BER_dB estimate = -1.60875..-1.59250 on DPCCH calculated as Log10(BER)

Data Source

NodeB_RNC_RXI

Source Field

pmDpcchBer

Source Section

RadioLinks

pmDpcchBer_031

Average BER_dB estimate = -1.59250..-1.57625 on DPCCH calculated as Log10(BER)

Data Source

NodeB_RNC_RXI

Source Field

pmDpcchBer

Source Section

RadioLinks

pmDpcchBer_032

Average BER_dB estimate = -1.57625..-1.56000 on DPCCH calculated as Log10(BER)

Data Source

NodeB_RNC_RXI

Source Field

pmDpcchBer

Source Section

RadioLinks

pmDpcchBer_033

Average BER_dB estimate = -1.56000..-1.54375 on DPCCH calculated as Log10(BER)

Data Source

NodeB_RNC_RXI

Source Field

pmDpcchBer

Source Section

RadioLinks

pmDpcchBer_034

Average BER_dB estimate = -1.54375..-1.52750 on DPCCH calculated as Log10(BER)

Data Source

NodeB_RNC_RXI

Source Field

pmDpcchBer

Source Section

RadioLinks

pmDpcchBer_035

Average BER_dB estimate = -1.52750..-1.51125 on DPCCH calculated as Log10(BER)

Data Source

NodeB_RNC_RXI

Source Field

pmDpcchBer

Source Section

RadioLinks

pmDpcchBer_036

Average BER_dB estimate = -1.51125..-1.49500 on DPCCH calculated as Log10(BER)

Data Source

NodeB_RNC_RXI

Source Field

pmDpcchBer

Source Section

RadioLinks

pmDpcchBer_037

Average BER_dB estimate = -1.49500..-1.47875 on DPCCH calculated as Log10(BER)

Data Source

NodeB_RNC_RXI

Source Field

pmDpcchBer

Source Section

RadioLinks

pmDpcchBer_038

Average BER_dB estimate = -1.47875..-1.46250 on DPCCH calculated as Log10(BER)

Data Source

NodeB_RNC_RXI

Source Field

pmDpcchBer

Source Section

RadioLinks

pmDpcchBer_039

Average BER_dB estimate = -1.46250..-1.44625 on DPCCH calculated as Log10(BER)

Data Source

NodeB_RNC_RXI

Source Field

pmDpcchBer

Source Section

RadioLinks

pmDpcchBer_040

Average BER_dB estimate = -1.44625..-1.43000 on DPCCH calculated as Log10(BER)

Data Source

NodeB_RNC_RXI

Source Field

pmDpcchBer

Source Section

RadioLinks

pmDpcchBer_041

Average BER_dB estimate = -1.43000..-1.41375 on DPCCH calculated as Log10(BER)

Data Source

NodeB_RNC_RXI

Source Field

pmDpcchBer

Source Section

RadioLinks

pmDpcchBer_042

Average BER_dB estimate = -1.41375..-1.39750 on DPCCH calculated as Log10(BER)

Data Source

NodeB_RNC_RXI

Source Field

pmDpcchBer

Source Section

RadioLinks

pmDpcchBer_043

Average BER_dB estimate = -1.39750..-1.38125 on DPCCH calculated as Log10(BER)

Data Source

NodeB_RNC_RXI

Source Field

pmDpcchBer

Source Section

RadioLinks

pmDpcchBer_044

Average BER_dB estimate = -1.38125..-1.36500 on DPCCH calculated as Log10(BER)

Data Source

NodeB_RNC_RXI

Source Field

pmDpcchBer

Source Section

RadioLinks

pmDpcchBer_045

Average BER_dB estimate = -1.36500..-1.34875 on DPCCH calculated as Log10(BER)

Data Source

NodeB_RNC_RXI

Source Field

pmDpcchBer

Source Section

RadioLinks

pmDpcchBer_046

Average BER_dB estimate = -1.34875..-1.33250 on DPCCH calculated as Log10(BER)

Data Source

NodeB_RNC_RXI

Source Field

pmDpcchBer

Source Section

RadioLinks

pmDpcchBer_047

Average BER_dB estimate = -1.33250..-1.31625 on DPCCH calculated as Log10(BER)

Data Source

NodeB_RNC_RXI

Source Field

pmDpcchBer

Source Section

RadioLinks

pmDpcchBer_048

Average BER_dB estimate = -1.31625..-1.30000 on DPCCH calculated as Log10(BER)

Data Source

NodeB_RNC_RXI

Source Field

pmDpcchBer

Source Section

RadioLinks

pmDpcchBer_049

Average BER_dB estimate = -1.30000..-1.28375 on DPCCH calculated as Log10(BER)

Data Source

NodeB_RNC_RXI

Source Field

pmDpcchBer

Source Section

RadioLinks

pmDpcchBer_050

Average BER_dB estimate = -1.28375..-1.26750 on DPCCH calculated as Log10(BER)

Data Source

NodeB_RNC_RXI

Source Field

pmDpcchBer

Source Section

RadioLinks

pmDpcchBer_051

Average BER_dB estimate = -1.26750..-1.25125 on DPCCH calculated as Log10(BER)

Data Source

NodeB_RNC_RXI

Source Field

pmDpcchBer

Source Section

RadioLinks

pmDpcchBer_052

Average BER_dB estimate = -1.25125..-1.23500 on DPCCH calculated as Log10(BER)

Data Source

NodeB_RNC_RXI

Source Field

pmDpcchBer

Source Section

RadioLinks

pmDpcchBer_053

Average BER_dB estimate = -1.23500..-1.21875 on DPCCH calculated as Log10(BER)

Data Source

NodeB_RNC_RXI

Source Field

pmDpcchBer

Source Section

RadioLinks

pmDpcchBer_054

Average BER_dB estimate = -1.21875..-1.20250 on DPCCH calculated as Log10(BER)

Data Source

NodeB_RNC_RXI

Source Field

pmDpcchBer

Source Section

RadioLinks

pmDpcchBer_055

Average BER_dB estimate = -1.20250..-1.18625 on DPCCH calculated as Log10(BER)

Data Source

NodeB_RNC_RXI

Source Field

pmDpcchBer

Source Section

RadioLinks

pmDpcchBer_056

Average BER_dB estimate = -1.18625..-1.17000 on DPCCH calculated as Log10(BER)

Data Source

NodeB_RNC_RXI

Source Field

pmDpcchBer

Source Section

RadioLinks

pmDpcchBer_057

Average BER_dB estimate = -1.17000..-1.15375 on DPCCH calculated as Log10(BER)

Data Source

NodeB_RNC_RXI

Source Field

pmDpcchBer

Source Section

RadioLinks

pmDpcchBer_058

Average BER_dB estimate = -1.15375..-1.13750 on DPCCH calculated as Log10(BER)

Data Source

NodeB_RNC_RXI

Source Field

pmDpcchBer

Source Section

RadioLinks

pmDpcchBer_059

Average BER_dB estimate = -1.13750..-1.12125 on DPCCH calculated as Log10(BER)

Data Source

NodeB_RNC_RXI

Source Field

pmDpcchBer

Source Section

RadioLinks

pmDpcchBer_060

Average BER_dB estimate = -1.12125..-1.10500 on DPCCH calculated as Log10(BER)

Data Source

NodeB_RNC_RXI

Source Field

pmDpcchBer

Source Section

RadioLinks

pmDpcchBer_061

Average BER_dB estimate = -1.10500..-1.08875 on DPCCH calculated as Log10(BER)

Data Source

NodeB_RNC_RXI

Source Field

pmDpcchBer

Source Section

RadioLinks

pmDpcchBer_062

Average BER_dB estimate = -1.08875..-1.07250 on DPCCH calculated as Log10(BER)

Data Source

NodeB_RNC_RXI

Source Field

pmDpcchBer

Source Section

RadioLinks

pmDpcchBer_063

Average BER_dB estimate = -1.07250..-1.05625 on DPCCH calculated as Log10(BER)

Data Source

NodeB_RNC_RXI

Source Field

pmDpcchBer

Source Section

RadioLinks

pmDpcchBer_064

Average BER_dB estimate = -1.05625..-1.04000 on DPCCH calculated as Log10(BER)

Data Source

NodeB_RNC_RXI

Source Field

pmDpcchBer

Source Section

RadioLinks

pmDpcchBer_065

Average BER_dB estimate = -1.04000..-1.02375 on DPCCH calculated as Log10(BER)

Data Source

NodeB_RNC_RXI

Source Field

pmDpcchBer

Source Section

RadioLinks

pmDpcchBer_066

Average BER_dB estimate = -1.02375..-1.00750 on DPCCH calculated as Log10(BER)

Data Source

NodeB_RNC_RXI

Source Field

pmDpcchBer

Source Section

RadioLinks

pmDpcchBer_067

Average BER_dB estimate = -1.00750..-0.99125 on DPCCH calculated as Log10(BER)

Data Source

NodeB_RNC_RXI

Source Field

pmDpcchBer

Source Section

RadioLinks

pmDpcchBer_068

Average BER_dB estimate = -0.99125..-0.97500 on DPCCH calculated as Log10(BER)

Data Source

NodeB_RNC_RXI

Source Field

pmDpcchBer

Source Section

RadioLinks

pmDpcchBer_069

Average BER_dB estimate = -0.97500..-0.95875 on DPCCH calculated as Log10(BER)

Data Source

NodeB_RNC_RXI

Source Field

pmDpcchBer

Source Section

RadioLinks

pmDpcchBer_070

Average BER_dB estimate = -0.95875..-0.94250 on DPCCH calculated as Log10(BER)

Data Source

NodeB_RNC_RXI

Source Field

pmDpcchBer

Source Section

RadioLinks

pmDpcchBer_071

Average BER_dB estimate = -0.94250..-0.92625 on DPCCH calculated as Log10(BER)

Data Source

NodeB_RNC_RXI

Source Field

pmDpcchBer

Source Section

RadioLinks

pmDpcchBer_072

Average BER_dB estimate = -0.92625..-0.91000 on DPCCH calculated as Log10(BER)

Data Source

NodeB_RNC_RXI

Source Field

pmDpcchBer

Source Section

RadioLinks

pmDpcchBer_073

Average BER_dB estimate = -0.91000..-0.89375 on DPCCH calculated as Log10(BER)

Data Source

NodeB_RNC_RXI

Source Field

pmDpcchBer

Source Section

RadioLinks

pmDpcchBer_074

Average BER_dB estimate = -0.89375..-0.87750 on DPCCH calculated as Log10(BER)

Data Source

NodeB_RNC_RXI

Source Field

pmDpcchBer

Source Section

RadioLinks

pmDpcchBer_075

Average BER_dB estimate = -0.87750..-0.86125 on DPCCH calculated as Log10(BER)

Data Source

NodeB_RNC_RXI

Source Field

pmDpcchBer

Source Section

RadioLinks

pmDpcchBer_076

Average BER_dB estimate = -0.86125..-0.84500 on DPCCH calculated as Log10(BER)

Data Source

NodeB_RNC_RXI

Source Field

pmDpcchBer

Source Section

RadioLinks

pmDpcchBer_077

Average BER_dB estimate = -0.84500..-0.82875 on DPCCH calculated as Log10(BER)

Data Source

NodeB_RNC_RXI

Source Field

pmDpcchBer

Source Section

RadioLinks

pmDpcchBer_078

Average BER_dB estimate = -0.82875..-0.81250 on DPCCH calculated as Log10(BER)

Data Source

NodeB_RNC_RXI

Source Field

pmDpcchBer

Source Section

RadioLinks

pmDpcchBer_079

Average BER_dB estimate = -0.81250..-0.79625 on DPCCH calculated as Log10(BER)

Data Source

NodeB_RNC_RXI

Source Field

pmDpcchBer

Source Section

RadioLinks

pmDpcchBer_080

Average BER_dB estimate = -0.79625..-0.78000 on DPCCH calculated as Log10(BER)

Data Source

NodeB_RNC_RXI

Source Field

pmDpcchBer

Source Section

RadioLinks

pmDpcchBer_081

Average BER_dB estimate = -0.78000..-0.76375 on DPCCH calculated as Log10(BER)

Data Source

NodeB_RNC_RXI

Source Field

pmDpcchBer

Source Section

RadioLinks

pmDpcchBer_082

Average BER_dB estimate = -0.76375..-0.74750 on DPCCH calculated as Log10(BER)

Data Source

NodeB_RNC_RXI

Source Field

pmDpcchBer

Source Section

RadioLinks

pmDpcchBer_083

Average BER_dB estimate = -0.74750..-0.73125 on DPCCH calculated as Log10(BER)

Data Source

NodeB_RNC_RXI

Source Field

pmDpcchBer

Source Section

RadioLinks

pmDpcchBer_084

Average BER_dB estimate = -0.73125..-0.71500 on DPCCH calculated as Log10(BER)

Data Source

NodeB_RNC_RXI

Source Field

pmDpcchBer

Source Section

RadioLinks

pmDpcchBer_085

Average BER_dB estimate = -0.71500..-0.69875 on DPCCH calculated as Log10(BER)

Data Source

NodeB_RNC_RXI

Source Field

pmDpcchBer

Source Section

RadioLinks

pmDpcchBer_086

Average BER_dB estimate = -0.69875..-0.68250 on DPCCH calculated as Log10(BER)

Data Source

NodeB_RNC_RXI

Source Field

pmDpcchBer

Source Section

RadioLinks

pmDpcchBer_087

Average BER_dB estimate = -0.68250..-0.66625 on DPCCH calculated as Log10(BER)

Data Source

NodeB_RNC_RXI

Source Field

pmDpcchBer

Source Section

RadioLinks

pmDpcchBer_088

Average BER_dB estimate = -0.66625..-0.65000 on DPCCH calculated as Log10(BER)

Data Source

NodeB_RNC_RXI

Source Field

pmDpcchBer

Source Section

RadioLinks

pmDpcchBer_089

Average BER_dB estimate = -0.65000..-0.63375 on DPCCH calculated as Log10(BER)

Data Source

NodeB_RNC_RXI

Source Field

pmDpcchBer

Source Section

RadioLinks

pmDpcchBer_090

Average BER_dB estimate = -0.63375..-0.61750 on DPCCH calculated as Log10(BER)

Data Source

NodeB_RNC_RXI

Source Field

pmDpcchBer

Source Section

RadioLinks

pmDpcchBer_091

Average BER_dB estimate = -0.61750..-0.60125 on DPCCH calculated as Log10(BER)

Data Source

NodeB_RNC_RXI

Source Field

pmDpcchBer

Source Section

RadioLinks

pmDpcchBer_092

Average BER_dB estimate = -0.60125..-0.58500 on DPCCH calculated as Log10(BER)

Data Source

NodeB_RNC_RXI

Source Field

pmDpcchBer

Source Section

RadioLinks

pmDpcchBer_093

Average BER_dB estimate = -0.58500..-0.56875 on DPCCH calculated as Log10(BER)

Data Source

NodeB_RNC_RXI

Source Field

pmDpcchBer

Source Section

RadioLinks

pmDpcchBer_094

Average BER_dB estimate = -0.56875..-0.55250 on DPCCH calculated as Log10(BER)

Data Source

NodeB_RNC_RXI

Source Field

pmDpcchBer

Source Section

RadioLinks

pmDpcchBer_095

Average BER_dB estimate = -0.55250..-0.53625 on DPCCH calculated as Log10(BER)

Data Source

NodeB_RNC_RXI

Source Field

pmDpcchBer

Source Section

RadioLinks

pmDpcchBer_096

Average BER_dB estimate = -0.53625..-0.52000 on DPCCH calculated as Log10(BER)

Data Source

NodeB_RNC_RXI

Source Field

pmDpcchBer

Source Section

RadioLinks

pmDpcchBer_097

Average BER_dB estimate = -0.52000..-0.50375 on DPCCH calculated as Log10(BER)

Data Source

NodeB_RNC_RXI

Source Field

pmDpcchBer

Source Section

RadioLinks

pmDpcchBer_098

Average BER_dB estimate = -0.50375..-0.48750 on DPCCH calculated as Log10(BER)

Data Source

NodeB_RNC_RXI

Source Field

pmDpcchBer

Source Section

RadioLinks

pmDpcchBer_099

Average BER_dB estimate = -0.48750..-0.47125 on DPCCH calculated as Log10(BER)

Data Source

NodeB_RNC_RXI

Source Field

pmDpcchBer

Source Section

RadioLinks

pmDpcchBer_100

Average BER_dB estimate = -0.47125..-0.45500 on DPCCH calculated as Log10(BER)

Data Source

NodeB_RNC_RXI

Source Field

pmDpcchBer

Source Section

RadioLinks

pmDpcchBer_101

Average BER_dB estimate = -0.45500..-0.43875 on DPCCH calculated as Log10(BER)

Data Source

NodeB_RNC_RXI

Source Field

pmDpcchBer

Source Section

RadioLinks

pmDpcchBer_102

Average BER_dB estimate = -0.43875..-0.42250 on DPCCH calculated as Log10(BER)

Data Source

NodeB_RNC_RXI

Source Field

pmDpcchBer

Source Section

RadioLinks

pmDpcchBer_103

Average BER_dB estimate = -0.42250..-0.40625 on DPCCH calculated as Log10(BER)

Data Source

NodeB_RNC_RXI

Source Field

pmDpcchBer

Source Section

RadioLinks

pmDpcchBer_104

Average BER_dB estimate = -0.40625..-0.39000 on DPCCH calculated as Log10(BER)

Data Source

NodeB_RNC_RXI

Source Field

pmDpcchBer

Source Section

RadioLinks

pmDpcchBer_105

Average BER_dB estimate = -0.39000..-0.37375 on DPCCH calculated as Log10(BER)

Data Source

NodeB_RNC_RXI

Source Field

pmDpcchBer

Source Section

RadioLinks

pmDpcchBer_106

Average BER_dB estimate = -0.37375..-0.35750 on DPCCH calculated as Log10(BER)

Data Source

NodeB_RNC_RXI

Source Field

pmDpcchBer

Source Section

RadioLinks

pmDpcchBer_107

Average BER_dB estimate = -0.35750..-0.34125 on DPCCH calculated as Log10(BER)

Data Source

NodeB_RNC_RXI

Source Field

pmDpcchBer

Source Section

RadioLinks

pmDpcchBer_108

Average BER_dB estimate = -0.34125..-0.32500 on DPCCH calculated as Log10(BER)

Data Source

NodeB_RNC_RXI

Source Field

pmDpcchBer

Source Section

RadioLinks

pmDpcchBer_109

Average BER_dB estimate = -0.32500..-0.30875 on DPCCH calculated as Log10(BER)

Data Source

NodeB_RNC_RXI

Source Field

pmDpcchBer

Source Section

RadioLinks

pmDpcchBer_110

Average BER_dB estimate = -0.30875..-0.29250 on DPCCH calculated as Log10(BER)

Data Source

NodeB_RNC_RXI

Source Field

pmDpcchBer

Source Section

RadioLinks

pmDpcchBer_111

Average BER_dB estimate = -0.29250..-0.27625 on DPCCH calculated as Log10(BER)

Data Source

NodeB_RNC_RXI

Source Field

pmDpcchBer

Source Section

RadioLinks

pmDpcchBer_112

Average BER_dB estimate = -0.27625..-0.26000 on DPCCH calculated as Log10(BER)

Data Source

NodeB_RNC_RXI

Source Field

pmDpcchBer

Source Section

RadioLinks

pmDpcchBer_113

Average BER_dB estimate = -0.26000..-0.24375 on DPCCH calculated as Log10(BER)

Data Source

NodeB_RNC_RXI

Source Field

pmDpcchBer

Source Section

RadioLinks

pmDpcchBer_114

Average BER_dB estimate = -0.24375..-0.22750 on DPCCH calculated as Log10(BER)

Data Source

NodeB_RNC_RXI

Source Field

pmDpcchBer

Source Section

RadioLinks

pmDpcchBer_115

Average BER_dB estimate = -0.22750..-0.21125 on DPCCH calculated as Log10(BER)

Data Source

NodeB_RNC_RXI

Source Field

pmDpcchBer

Source Section

RadioLinks

pmDpcchBer_116

Average BER_dB estimate = -0.21125..-0.19500 on DPCCH calculated as Log10(BER)

Data Source

NodeB_RNC_RXI

Source Field

pmDpcchBer

Source Section

RadioLinks

pmDpcchBer_117

Average BER_dB estimate = -0.19500..-0.17875 on DPCCH calculated as Log10(BER)

Data Source

NodeB_RNC_RXI

Source Field

pmDpcchBer

Source Section

RadioLinks

pmDpcchBer_118

Average BER_dB estimate = -0.17875..-0.16250 on DPCCH calculated as Log10(BER)

Data Source

NodeB_RNC_RXI

Source Field

pmDpcchBer

Source Section

RadioLinks

pmDpcchBer_119

Average BER_dB estimate = -0.16250..-0.14625 on DPCCH calculated as Log10(BER)

Data Source

NodeB_RNC_RXI

Source Field

pmDpcchBer

Source Section

RadioLinks

pmDpcchBer_120

Average BER_dB estimate = -0.14625..-0.13000 on DPCCH calculated as Log10(BER)

Data Source

NodeB_RNC_RXI

Source Field

pmDpcchBer

Source Section

RadioLinks

pmDpcchBer_121

Average BER_dB estimate = -0.13000..-0.11375 on DPCCH calculated as Log10(BER)

Data Source

NodeB_RNC_RXI

Source Field

pmDpcchBer

Source Section

RadioLinks

pmDpcchBer_122

Average BER_dB estimate = -0.11375..-0.09750 on DPCCH calculated as Log10(BER)

Data Source

NodeB_RNC_RXI

Source Field

pmDpcchBer

Source Section

RadioLinks

pmDpcchBer_123

Average BER_dB estimate = -0.09750..-0.08125 on DPCCH calculated as Log10(BER)

Data Source

NodeB_RNC_RXI

Source Field

pmDpcchBer

Source Section

RadioLinks

pmDpcchBer_124

Average BER_dB estimate = -0.08125..-0.06500 on DPCCH calculated as Log10(BER)

Data Source

NodeB_RNC_RXI

Source Field

pmDpcchBer

Source Section

RadioLinks

pmDpcchBer_125

Average BER_dB estimate = -0.06500..-0.04875 on DPCCH calculated as Log10(BER)

Data Source

NodeB_RNC_RXI

Source Field

pmDpcchBer

Source Section

RadioLinks

pmDpcchBer_126

Average BER_dB estimate = -0.04875..-0.03250 on DPCCH calculated as Log10(BER)

Data Source

NodeB_RNC_RXI

Source Field

pmDpcchBer

Source Section

RadioLinks

pmDpcchBer_127

Average BER_dB estimate = -0.03250..-0.01625 on DPCCH calculated as Log10(BER)

Data Source

NodeB_RNC_RXI

Source Field

pmDpcchBer

Source Section

RadioLinks

pmDpcchBer_128

Average BER_dB estimate = -0.01625..0.00000 on DPCCH calculated as Log10(BER)

Data Source

NodeB_RNC_RXI

Source Field

pmDpcchBer

Source Section

RadioLinks

pmDpcchBerP5MD_00

The average BER detected on DPCCH pilot bits. Measurement is performed on RadioLinkSet not on RadioLink - ie after RadioLink combination in UpLink. Range: Number of BER values that are equal to 0

Data Source

NodeB_RNC_RXI

Source Field

pmDpdchBer

Source Section

RadioLinks

pmDpcchBerP5MD_01

The average BER detected on DPCCH pilot bits. Measurement is performed on RadioLinkSet not on RadioLink - ie after RadioLink combination in UpLink. Range: Number of log10(BER) values in range MIN_VALUE..-2.06375

Data Source

NodeB_RNC_RXI

Source Field

pmDpdchBer

Source Section

RadioLinks

pmDpcchBerP5MD_02

The average BER detected on DPCCH pilot bits. Measurement is performed on RadioLinkSet not on RadioLink - ie after RadioLink combination in UpLink. Range: Number of log10(BER) values in range -2.06375..-1.9825(P5MD)

Data Source

NodeB_RNC_RXI

Source Field

pmDpdchBer

Source Section

RadioLinks

pmDpcchBerP5MD_03

The average BER detected on DPCCH pilot bits. Measurement is performed on RadioLinkSet not on RadioLink - ie after RadioLink combination in UpLink. Range: Number of log10(BER) values in range -1.9825..-1.90125(P5MD)

Data Source

NodeB_RNC_RXI

Source Field

pmDpdchBer

Source Section

RadioLinks

pmDpcchBerP5MD_04

The average BER detected on DPCCH pilot bits. Measurement is performed on RadioLinkSet not on RadioLink - ie after RadioLink combination in UpLink. Range: Number of log10(BER) values in range -1.90125..-1.82(P5MD)

Data Source

NodeB_RNC_RXI

Source Field

pmDpdchBer

Source Section

RadioLinks

pmDpcchBerP5MD_05

The average BER detected on DPCCH pilot bits. Measurement is performed on RadioLinkSet not on RadioLink - ie after RadioLink combination in UpLink. Range: Number of log10(BER) values in range -1.82..-1.73875(P5MD)

Data Source

NodeB_RNC_RXI

Source Field

pmDpdchBer

Source Section

RadioLinks

pmDpcchBerP5MD_06

The average BER detected on DPCCH pilot bits. Measurement is performed on RadioLinkSet not on RadioLink - ie after RadioLink combination in UpLink. Range: Number of log10(BER) values in range -1.73875..-1.6575(P5MD)

Data Source

NodeB_RNC_RXI

Source Field

pmDpdchBer

Source Section

RadioLinks

pmDpcchBerP5MD_07

The average BER detected on DPCCH pilot bits. Measurement is performed on RadioLinkSet not on RadioLink - ie after RadioLink combination in UpLink. Range: Number of log10(BER) values in range -1.6575..-1.57625(P5MD)

Data Source

NodeB_RNC_RXI

Source Field

pmDpdchBer

Source Section

RadioLinks

pmDpcchBerP5MD_08

The average BER detected on DPCCH pilot bits. Measurement is performed on RadioLinkSet not on RadioLink - ie after RadioLink combination in UpLink. Range: Number of log10(BER) values in range -1.57625..-1.495(P5MD)

Data Source

NodeB_RNC_RXI

Source Field

pmDpdchBer

Source Section

RadioLinks

pmDpcchBerP5MD_09

The average BER detected on DPCCH pilot bits. Measurement is performed on RadioLinkSet not on RadioLink - ie after RadioLink combination in UpLink. Range: Number of log10(BER) values in range -1.495..-1.41375(P5MD)

Data Source

NodeB_RNC_RXI

Source Field

pmDpdchBer

Source Section

RadioLinks

pmDpcchBerP5MD_10

The average BER detected on DPCCH pilot bits. Measurement is performed on RadioLinkSet not on RadioLink - ie after RadioLink combination in UpLink. Range: Number of log10(BER) values in range -1.41375..-1.3325(P5MD)

Data Source

NodeB_RNC_RXI

Source Field

pmDpdchBer

Source Section

RadioLinks

pmDpcchBerP5MD_11

The average BER detected on DPCCH pilot bits. Measurement is performed on RadioLinkSet not on RadioLink - ie after RadioLink combination in UpLink. Range: Number of log10(BER) values in range -1.3325..-1.25125(P5MD)

Data Source

NodeB_RNC_RXI

Source Field

pmDpdchBer

Source Section

RadioLinks

pmDpcchBerP5MD_12

The average BER detected on DPCCH pilot bits. Measurement is performed on RadioLinkSet not on RadioLink - ie after RadioLink combination in UpLink. Range: Number of log10(BER) values in range -1.25125..-1.17(P5MD)

Data Source

NodeB_RNC_RXI

Source Field

pmDpdchBer

Source Section

RadioLinks

pmDpcchBerP5MD_13

The average BER detected on DPCCH pilot bits. Measurement is performed on RadioLinkSet not on RadioLink - ie after RadioLink combination in UpLink. Range: Number of log10(BER) values in range -1.17..-1.08875(P5MD)

Data Source

NodeB_RNC_RXI

Source Field

pmDpdchBer

Source Section

RadioLinks

pmDpcchBerP5MD_14

The average BER detected on DPCCH pilot bits. Measurement is performed on RadioLinkSet not on RadioLink - ie after RadioLink combination in UpLink. Range: Number of log10(BER) values in range -1.08875..-1.0075(P5MD)

Data Source

NodeB_RNC_RXI

Source Field

pmDpdchBer

Source Section

RadioLinks

pmDpcchBerP5MD_15

The average BER detected on DPCCH pilot bits. Measurement is performed on RadioLinkSet not on RadioLink - ie after RadioLink combination in UpLink. Range: Number of log10(BER) values in range -1.0075..-0.92625(P5MD)

Data Source

NodeB_RNC_RXI

Source Field

pmDpdchBer

Source Section

RadioLinks

pmDpcchBerP5MD_16

The average BER detected on DPCCH pilot bits. Measurement is performed on RadioLinkSet not on RadioLink - ie after RadioLink combination in UpLink. Range: Number of log10(BER) values in range -0.92625..-0.845(P5MD)

Data Source

NodeB_RNC_RXI

Source Field

pmDpdchBer

Source Section

RadioLinks

pmDpcchBerP5MD_17

The average BER detected on DPCCH pilot bits. Measurement is performed on RadioLinkSet not on RadioLink - ie after RadioLink combination in UpLink. Range: Number of log10(BER) values in range -0.845..-0.76375(P5MD)

Data Source

NodeB_RNC_RXI

Source Field

pmDpdchBer

Source Section

RadioLinks

pmDpcchBerP5MD_18

The average BER detected on DPCCH pilot bits. Measurement is performed on RadioLinkSet not on RadioLink - ie after RadioLink combination in UpLink. Range: Number of log10(BER) values in range -0.76375..-0.6825(P5MD)

Data Source

NodeB_RNC_RXI

Source Field

pmDpdchBer

Source Section

RadioLinks

pmDpcchBerP5MD_19

The average BER detected on DPCCH pilot bits. Measurement is performed on RadioLinkSet not on RadioLink - ie after RadioLink combination in UpLink. Range: Number of log10(BER) values in range -0.6825..-0.60125(P5MD)

Data Source

NodeB_RNC_RXI

Source Field

pmDpdchBer

Source Section

RadioLinks

pmDpcchBerP5MD_20

The average BER detected on DPCCH pilot bits. Measurement is performed on RadioLinkSet not on RadioLink - ie after RadioLink combination in UpLink. Range: Number of log10(BER) values in range -0.60125..-0.52(P5MD)

Data Source

NodeB_RNC_RXI

Source Field

pmDpdchBer

Source Section

RadioLinks

pmDpcchBerP5MD_21

The average BER detected on DPCCH pilot bits. Measurement is performed on RadioLinkSet not on RadioLink - ie after RadioLink combination in UpLink. Range: Number of log10(BER) values in range -0.52..-0.43875(P5MD)

Data Source

NodeB_RNC_RXI

Source Field

pmDpdchBer

Source Section

RadioLinks

pmDpcchBerP5MD_22

The average BER detected on DPCCH pilot bits. Measurement is performed on RadioLinkSet not on RadioLink - ie after RadioLink combination in UpLink. Range: Number of log10(BER) values in range -0.43875..-0.3575(P5MD)

Data Source

NodeB_RNC_RXI

Source Field

pmDpdchBer

Source Section

RadioLinks

pmDpcchBerP5MD_23

The average BER detected on DPCCH pilot bits. Measurement is performed on RadioLinkSet not on RadioLink - ie after RadioLink combination in UpLink. Range: Number of log10(BER) values in range -0.3575..-0.27625(P5MD)

Data Source

NodeB_RNC_RXI

Source Field

pmDpdchBer

Source Section

RadioLinks

pmDpcchBerP5MD_24

The average BER detected on DPCCH pilot bits. Measurement is performed on RadioLinkSet not on RadioLink - ie after RadioLink combination in UpLink. Range: Number of log10(BER) values in range >= -0.27625(P5MD)

Data Source

NodeB_RNC_RXI

Source Field

pmDpdchBer

Source Section

RadioLinks

pmDpchCodePowerSf128_00

Number of times average transmitted code power 0-6 dBm on a DPCH channel. Spreading Factor = 128

Data Source

NodeB_RNC_RXI

Source Field

pmDpchCodePowerSf128

Source Section

RadioLinks

pmDpchCodePowerSf128_01

Number of times average transmitted code power 6-6.5 dBm on a DPCH channel. Spreading Factor = 128

Data Source

NodeB_RNC_RXI

Source Field

pmDpchCodePowerSf128

Source Section

RadioLinks

pmDpchCodePowerSf128_02

Number of times average transmitted code power 6.5-7 dBm on a DPCH channel. Spreading Factor = 128

Data Source

NodeB_RNC_RXI

Source Field

pmDpchCodePowerSf128

Source Section

RadioLinks

pmDpchCodePowerSf128_03

Number of times average transmitted code power 7-7.5 dBm on a DPCH channel. Spreading Factor = 128

Data Source

NodeB_RNC_RXI

Source Field

pmDpchCodePowerSf128

Source Section

RadioLinks

pmDpchCodePowerSf128_04

Number of times average transmitted code power 7.5-8 dBm on a DPCH channel. Spreading Factor = 128

Data Source

NodeB_RNC_RXI

Source Field

pmDpchCodePowerSf128

Source Section

RadioLinks

pmDpchCodePowerSf128_05

Number of times average transmitted code power 8-8.5 dBm on a DPCH channel. Spreading Factor = 128

Data Source

NodeB_RNC_RXI

Source Field

pmDpchCodePowerSf128

Source Section

RadioLinks

pmDpchCodePowerSf128_06

Number of times average transmitted code power 8.5-9 dBm on a DPCH channel. Spreading Factor = 128

Data Source

NodeB_RNC_RXI

Source Field

pmDpchCodePowerSf128

Source Section

RadioLinks

pmDpchCodePowerSf128_07

Number of times average transmitted code power 9-9.5 dBm on a DPCH channel. Spreading Factor = 128

Data Source

NodeB_RNC_RXI

Source Field

pmDpchCodePowerSf128

Source Section

RadioLinks

pmDpchCodePowerSf128_08

Number of times average transmitted code power 9.5-10 dBm on a DPCH channel. Spreading Factor = 128

Data Source

NodeB_RNC_RXI

Source Field

pmDpchCodePowerSf128

Source Section

RadioLinks

pmDpchCodePowerSf128_09

Number of times average transmitted code power 10-10.5 dBm on a DPCH channel. Spreading Factor = 128

Data Source

NodeB_RNC_RXI

Source Field

pmDpchCodePowerSf128

Source Section

RadioLinks

pmDpchCodePowerSf128_10

Number of times average transmitted code power 10.5-11 dBm on a DPCH channel. Spreading Factor = 128

Data Source

NodeB_RNC_RXI

Source Field

pmDpchCodePowerSf128

Source Section

RadioLinks

pmDpchCodePowerSf128_11

Number of times average transmitted code power 11-11.5 dBm on a DPCH channel. Spreading Factor = 128

Data Source

NodeB_RNC_RXI

Source Field

pmDpchCodePowerSf128

Source Section

RadioLinks

pmDpchCodePowerSf128_12

Number of times average transmitted code power 11.5-12 dBm on a DPCH channel. Spreading Factor = 128

Data Source

NodeB_RNC_RXI

Source Field

pmDpchCodePowerSf128

Source Section

RadioLinks

pmDpchCodePowerSf128_13

Number of times average transmitted code power 12-12.5 dBm on a DPCH channel. Spreading Factor = 128

Data Source

NodeB_RNC_RXI

Source Field

pmDpchCodePowerSf128

Source Section

RadioLinks

pmDpchCodePowerSf128_14

Number of times average transmitted code power 12.5-13 dBm on a DPCH channel. Spreading Factor = 128

Data Source

NodeB_RNC_RXI

Source Field

pmDpchCodePowerSf128

Source Section

RadioLinks

pmDpchCodePowerSf128_15

Number of times average transmitted code power 13-13.5 dBm on a DPCH channel. Spreading Factor = 128

Data Source

NodeB_RNC_RXI

Source Field

pmDpchCodePowerSf128

Source Section

RadioLinks

pmDpchCodePowerSf128_16

Number of times average transmitted code power 13.5-14 dBm on a DPCH channel. Spreading Factor = 128

Data Source

NodeB_RNC_RXI

Source Field

pmDpchCodePowerSf128

Source Section

RadioLinks

pmDpchCodePowerSf128_17

Number of times average transmitted code power 14-14.5 dBm on a DPCH channel. Spreading Factor = 128

Data Source

NodeB_RNC_RXI

Source Field

pmDpchCodePowerSf128

Source Section

RadioLinks

pmDpchCodePowerSf128_18

Number of times average transmitted code power 14.5-15 dBm on a DPCH channel. Spreading Factor = 128

Data Source

NodeB_RNC_RXI

Source Field

pmDpchCodePowerSf128

Source Section

RadioLinks

pmDpchCodePowerSf128_19

Number of times average transmitted code power 15-15.5 dBm on a DPCH channel. Spreading Factor = 128

Data Source

NodeB_RNC_RXI

Source Field

pmDpchCodePowerSf128

Source Section

RadioLinks

pmDpchCodePowerSf128_20

Number of times average transmitted code power 15.5-16 dBm on a DPCH channel. Spreading Factor = 128

Data Source

NodeB_RNC_RXI

Source Field

pmDpchCodePowerSf128

Source Section

RadioLinks

pmDpchCodePowerSf128_21

Number of times average transmitted code power 16-16.5 dBm on a DPCH channel. Spreading Factor = 128

Data Source

NodeB_RNC_RXI

Source Field

pmDpchCodePowerSf128

Source Section

RadioLinks

pmDpchCodePowerSf128_22

Number of times average transmitted code power 16.5-17 dBm on a DPCH channel. Spreading Factor = 128

Data Source

NodeB_RNC_RXI

Source Field

pmDpchCodePowerSf128

Source Section

RadioLinks

pmDpchCodePowerSf128_23

Number of times average transmitted code power 17-17.5 dBm on a DPCH channel. Spreading Factor = 128

Data Source

NodeB_RNC_RXI

Source Field

pmDpchCodePowerSf128

Source Section

RadioLinks

pmDpchCodePowerSf128_24

Number of times average transmitted code power 17.5-18 dBm on a DPCH channel. Spreading Factor = 128

Data Source

NodeB_RNC_RXI

Source Field

pmDpchCodePowerSf128

Source Section

RadioLinks

pmDpchCodePowerSf128_25

Number of times average transmitted code power 18-18.5 dBm on a DPCH channel. Spreading Factor = 128

Data Source

NodeB_RNC_RXI

Source Field

pmDpchCodePowerSf128

Source Section

RadioLinks

pmDpchCodePowerSf128_26

Number of times average transmitted code power 18.5-19 dBm on a DPCH channel. Spreading Factor = 128

Data Source

NodeB_RNC_RXI

Source Field

pmDpchCodePowerSf128

Source Section

RadioLinks

pmDpchCodePowerSf128_27

Number of times average transmitted code power 19-19.5 dBm on a DPCH channel. Spreading Factor = 128

Data Source

NodeB_RNC_RXI

Source Field

pmDpchCodePowerSf128

Source Section

RadioLinks

pmDpchCodePowerSf128_28

Number of times average transmitted code power 19.5-20 dBm on a DPCH channel. Spreading Factor = 128

Data Source

NodeB_RNC_RXI

Source Field

pmDpchCodePowerSf128

Source Section

RadioLinks

pmDpchCodePowerSf128_29

Number of times average transmitted code power 20-20.5 dBm on a DPCH channel. Spreading Factor = 128

Data Source

NodeB_RNC_RXI

Source Field

pmDpchCodePowerSf128

Source Section

RadioLinks

pmDpchCodePowerSf128_30

Number of times average transmitted code power 20.5-21 dBm on a DPCH channel. Spreading Factor = 128

Data Source

NodeB_RNC_RXI

Source Field

pmDpchCodePowerSf128

Source Section

RadioLinks

pmDpchCodePowerSf128_31

Number of times average transmitted code power 21-21.5 dBm on a DPCH channel. Spreading Factor = 128

Data Source

NodeB_RNC_RXI

Source Field

pmDpchCodePowerSf128

Source Section

RadioLinks

pmDpchCodePowerSf128_32

Number of times average transmitted code power 21.5-22 dBm on a DPCH channel. Spreading Factor = 128

Data Source

NodeB_RNC_RXI

Source Field

pmDpchCodePowerSf128

Source Section

RadioLinks

pmDpchCodePowerSf128_33

Number of times average transmitted code power 22-22.5 dBm on a DPCH channel. Spreading Factor = 128

Data Source

NodeB_RNC_RXI

Source Field

pmDpchCodePowerSf128

Source Section

RadioLinks

pmDpchCodePowerSf128_34

Number of times average transmitted code power 22.5-23 dBm on a DPCH channel. Spreading Factor = 128

Data Source

NodeB_RNC_RXI

Source Field

pmDpchCodePowerSf128

Source Section

RadioLinks

pmDpchCodePowerSf128_35

Number of times average transmitted code power 23-23.5 dBm on a DPCH channel. Spreading Factor = 128

Data Source

NodeB_RNC_RXI

Source Field

pmDpchCodePowerSf128

Source Section

RadioLinks

pmDpchCodePowerSf128_36

Number of times average transmitted code power 23.5-24 dBm on a DPCH channel. Spreading Factor = 128

Data Source

NodeB_RNC_RXI

Source Field

pmDpchCodePowerSf128

Source Section

RadioLinks

pmDpchCodePowerSf128_37

Number of times average transmitted code power 24-24.5 dBm on a DPCH channel. Spreading Factor = 128

Data Source

NodeB_RNC_RXI

Source Field

pmDpchCodePowerSf128

Source Section

RadioLinks

pmDpchCodePowerSf128_38

Number of times average transmitted code power 24.5-25 dBm on a DPCH channel. Spreading Factor = 128

Data Source

NodeB_RNC_RXI

Source Field

pmDpchCodePowerSf128

Source Section

RadioLinks

pmDpchCodePowerSf128_39

Number of times average transmitted code power 25-25.5 dBm on a DPCH channel. Spreading Factor = 128

Data Source

NodeB_RNC_RXI

Source Field

pmDpchCodePowerSf128

Source Section

RadioLinks

pmDpchCodePowerSf128_40

Number of times average transmitted code power 25.5-26 dBm on a DPCH channel. Spreading Factor = 128

Data Source

NodeB_RNC_RXI

Source Field

pmDpchCodePowerSf128

Source Section

RadioLinks

pmDpchCodePowerSf128_41

Number of times average transmitted code power 26-26.5 dBm on a DPCH channel. Spreading Factor = 128

Data Source

NodeB_RNC_RXI

Source Field

pmDpchCodePowerSf128

Source Section

RadioLinks

pmDpchCodePowerSf128_42

Number of times average transmitted code power 26.5-27 dBm on a DPCH channel. Spreading Factor = 128

Data Source

NodeB_RNC_RXI

Source Field

pmDpchCodePowerSf128

Source Section

RadioLinks

pmDpchCodePowerSf128_43

Number of times average transmitted code power 27-27.5 dBm on a DPCH channel. Spreading Factor = 128

Data Source

NodeB_RNC_RXI

Source Field

pmDpchCodePowerSf128

Source Section

RadioLinks

pmDpchCodePowerSf128_44

Number of times average transmitted code power 27.5-28 dBm on a DPCH channel. Spreading Factor = 128

Data Source

NodeB_RNC_RXI

Source Field

pmDpchCodePowerSf128

Source Section

RadioLinks

pmDpchCodePowerSf128_45

Number of times average transmitted code power 28-28.5 dBm on a DPCH channel. Spreading Factor = 128

Data Source

NodeB_RNC_RXI

Source Field

pmDpchCodePowerSf128

Source Section

RadioLinks

pmDpchCodePowerSf128_46

Number of times average transmitted code power 28.5-29 dBm on a DPCH channel. Spreading Factor = 128

Data Source

NodeB_RNC_RXI

Source Field

pmDpchCodePowerSf128

Source Section

RadioLinks

pmDpchCodePowerSf128_47

Number of times average transmitted code power 29-29.5 dBm on a DPCH channel. Spreading Factor = 128

Data Source

NodeB_RNC_RXI

Source Field

pmDpchCodePowerSf128

Source Section

RadioLinks

pmDpchCodePowerSf128_48

Number of times average transmitted code power 29.5-30 dBm on a DPCH channel. Spreading Factor = 128

Data Source

NodeB_RNC_RXI

Source Field

pmDpchCodePowerSf128

Source Section

RadioLinks

pmDpchCodePowerSf128_49

Number of times average transmitted code power 30-30.5 dBm on a DPCH channel. Spreading Factor = 128

Data Source

NodeB_RNC_RXI

Source Field

pmDpchCodePowerSf128

Source Section

RadioLinks

pmDpchCodePowerSf128_50

Number of times average transmitted code power 30.5-31 dBm on a DPCH channel. Spreading Factor = 128

Data Source

NodeB_RNC_RXI

Source Field

pmDpchCodePowerSf128

Source Section

RadioLinks

pmDpchCodePowerSf128_51

Number of times average transmitted code power 31-31.5 dBm on a DPCH channel. Spreading Factor = 128

Data Source

NodeB_RNC_RXI

Source Field

pmDpchCodePowerSf128

Source Section

RadioLinks

pmDpchCodePowerSf128_52

Number of times average transmitted code power 31.5-32 dBm on a DPCH channel. Spreading Factor = 128

Data Source

NodeB_RNC_RXI

Source Field

pmDpchCodePowerSf128

Source Section

RadioLinks

pmDpchCodePowerSf128_53

Number of times average transmitted code power 32-32.5 dBm on a DPCH channel. Spreading Factor = 128

Data Source

NodeB_RNC_RXI

Source Field

pmDpchCodePowerSf128

Source Section

RadioLinks

pmDpchCodePowerSf128_54

Number of times average transmitted code power 32.5-33 dBm on a DPCH channel. Spreading Factor = 128

Data Source

NodeB_RNC_RXI

Source Field

pmDpchCodePowerSf128

Source Section

RadioLinks

pmDpchCodePowerSf128_55

Number of times average transmitted code power 33-33.5 dBm on a DPCH channel. Spreading Factor = 128

Data Source

NodeB_RNC_RXI

Source Field

pmDpchCodePowerSf128

Source Section

RadioLinks

pmDpchCodePowerSf128_56

Number of times average transmitted code power 33.5-34 dBm on a DPCH channel. Spreading Factor = 128

Data Source

NodeB_RNC_RXI

Source Field

pmDpchCodePowerSf128

Source Section

RadioLinks

pmDpchCodePowerSf128_57

Number of times average transmitted code power 34-34.5 dBm on a DPCH channel. Spreading Factor = 128

Data Source

NodeB_RNC_RXI

Source Field

pmDpchCodePowerSf128

Source Section

RadioLinks

pmDpchCodePowerSf128_58

Number of times average transmitted code power 34.5-35 dBm on a DPCH channel. Spreading Factor = 128

Data Source

NodeB_RNC_RXI

Source Field

pmDpchCodePowerSf128

Source Section

RadioLinks

pmDpchCodePowerSf128_59

Number of times average transmitted code power 35-35.5 dBm on a DPCH channel. Spreading Factor = 128

Data Source

NodeB_RNC_RXI

Source Field

pmDpchCodePowerSf128

Source Section

RadioLinks

pmDpchCodePowerSf128_60

Number of times average transmitted code power 35.5-36 dBm on a DPCH channel. Spreading Factor = 128

Data Source

NodeB_RNC_RXI

Source Field

pmDpchCodePowerSf128

Source Section

RadioLinks

pmDpchCodePowerSf128_61

Number of times average transmitted code power 36-36.5 dBm on a DPCH channel. Spreading Factor = 128

Data Source

NodeB_RNC_RXI

Source Field

pmDpchCodePowerSf128

Source Section

RadioLinks

pmDpchCodePowerSf128_62

Number of times average transmitted code power 36.5-37 dBm on a DPCH channel. Spreading Factor = 128

Data Source

NodeB_RNC_RXI

Source Field

pmDpchCodePowerSf128

Source Section

RadioLinks

pmDpchCodePowerSf128_63

Number of times average transmitted code power 37-37.5 dBm on a DPCH channel. Spreading Factor = 128

Data Source

NodeB_RNC_RXI

Source Field

pmDpchCodePowerSf128

Source Section

RadioLinks

pmDpchCodePowerSf128_64

Number of times average transmitted code power 37.5-38 dBm on a DPCH channel. Spreading Factor = 128

Data Source

NodeB_RNC_RXI

Source Field

pmDpchCodePowerSf128

Source Section

RadioLinks

pmDpchCodePowerSf128_65

Number of times average transmitted code power 38-38.5 dBm on a DPCH channel. Spreading Factor = 128

Data Source

NodeB_RNC_RXI

Source Field

pmDpchCodePowerSf128

Source Section

RadioLinks

pmDpchCodePowerSf128_66

Number of times average transmitted code power 38.5-39 dBm on a DPCH channel. Spreading Factor = 128

Data Source

NodeB_RNC_RXI

Source Field

pmDpchCodePowerSf128

Source Section

RadioLinks

pmDpchCodePowerSf128_67

Number of times average transmitted code power 39-39.5 dBm on a DPCH channel. Spreading Factor = 128

Data Source

NodeB_RNC_RXI

Source Field

pmDpchCodePowerSf128

Source Section

RadioLinks

pmDpchCodePowerSf128_68

Number of times average transmitted code power 39.5-40 dBm on a DPCH channel. Spreading Factor = 128

Data Source

NodeB_RNC_RXI

Source Field

pmDpchCodePowerSf128

Source Section

RadioLinks

pmDpchCodePowerSf128_69

Number of times average transmitted code power 40-40.5 dBm on a DPCH channel. Spreading Factor = 128

Data Source

NodeB_RNC_RXI

Source Field

pmDpchCodePowerSf128

Source Section

RadioLinks

pmDpchCodePowerSf128_70

Number of times average transmitted code power 40.5-41 dBm on a DPCH channel. Spreading Factor = 128

Data Source

NodeB_RNC_RXI

Source Field

pmDpchCodePowerSf128

Source Section

RadioLinks

pmDpchCodePowerSf128_71

Number of times average transmitted code power 41-41.5 dBm on a DPCH channel. Spreading Factor = 128

Data Source

NodeB_RNC_RXI

Source Field

pmDpchCodePowerSf128

Source Section

RadioLinks

pmDpchCodePowerSf128_72

Number of times average transmitted code power 41.5-42 dBm on a DPCH channel. Spreading Factor = 128

Data Source

NodeB_RNC_RXI

Source Field

pmDpchCodePowerSf128

Source Section

RadioLinks

pmDpchCodePowerSf128_73

Number of times average transmitted code power 42-42.5 dBm on a DPCH channel. Spreading Factor = 128

Data Source

NodeB_RNC_RXI

Source Field

pmDpchCodePowerSf128

Source Section

RadioLinks

pmDpchCodePowerSf128_74

Number of times average transmitted code power 42.5-43 dBm on a DPCH channel. Spreading Factor = 128

Data Source

NodeB_RNC_RXI

Source Field

pmDpchCodePowerSf128

Source Section

RadioLinks

pmDpchCodePowerSf16_00

Number of times average transmitted code power 0-6 dBm on a DPCH channel. Spreading Factor = 16

Data Source

NodeB_RNC_RXI

Source Field

pmDpchCodePowerSf16

Source Section

RadioLinks

pmDpchCodePowerSf16_01

Number of times average transmitted code power 6-6.5 dBm on a DPCH channel. Spreading Factor = 16

Data Source

NodeB_RNC_RXI

Source Field

pmDpchCodePowerSf16

Source Section

RadioLinks

pmDpchCodePowerSf16_02

Number of times average transmitted code power 6.5-7 dBm on a DPCH channel. Spreading Factor = 16

Data Source

NodeB_RNC_RXI

Source Field

pmDpchCodePowerSf16

Source Section

RadioLinks

pmDpchCodePowerSf16_03

Number of times average transmitted code power 7-7.5 dBm on a DPCH channel. Spreading Factor = 16

Data Source

NodeB_RNC_RXI

Source Field

pmDpchCodePowerSf16

Source Section

RadioLinks

pmDpchCodePowerSf16_04

Number of times average transmitted code power 7.5-8 dBm on a DPCH channel. Spreading Factor = 16

Data Source

NodeB_RNC_RXI

Source Field

pmDpchCodePowerSf16

Source Section

RadioLinks

pmDpchCodePowerSf16_05

Number of times average transmitted code power 8-8.5 dBm on a DPCH channel. Spreading Factor = 16

Data Source

NodeB_RNC_RXI

Source Field

pmDpchCodePowerSf16

Source Section

RadioLinks

pmDpchCodePowerSf16_06

Number of times average transmitted code power 8.5-9 dBm on a DPCH channel. Spreading Factor = 16

Data Source

NodeB_RNC_RXI

Source Field

pmDpchCodePowerSf16

Source Section

RadioLinks

pmDpchCodePowerSf16_07

Number of times average transmitted code power 9-9.5 dBm on a DPCH channel. Spreading Factor = 16

Data Source

NodeB_RNC_RXI

Source Field

pmDpchCodePowerSf16

Source Section

RadioLinks

pmDpchCodePowerSf16_08

Number of times average transmitted code power 9.5-10 dBm on a DPCH channel. Spreading Factor = 16

Data Source

NodeB_RNC_RXI

Source Field

pmDpchCodePowerSf16

Source Section

RadioLinks

pmDpchCodePowerSf16_09

Number of times average transmitted code power 10-10.5 dBm on a DPCH channel. Spreading Factor = 16

Data Source

NodeB_RNC_RXI

Source Field

pmDpchCodePowerSf16

Source Section

RadioLinks

pmDpchCodePowerSf16_10

Number of times average transmitted code power 10.5-11 dBm on a DPCH channel. Spreading Factor = 16

Data Source

NodeB_RNC_RXI

Source Field

pmDpchCodePowerSf16

Source Section

RadioLinks

pmDpchCodePowerSf16_11

Number of times average transmitted code power 11-11.5 dBm on a DPCH channel. Spreading Factor = 16

Data Source

NodeB_RNC_RXI

Source Field

pmDpchCodePowerSf16

Source Section

RadioLinks

pmDpchCodePowerSf16_12

Number of times average transmitted code power 11.5-12 dBm on a DPCH channel. Spreading Factor = 16

Data Source

NodeB_RNC_RXI

Source Field

pmDpchCodePowerSf16

Source Section

RadioLinks

pmDpchCodePowerSf16_13

Number of times average transmitted code power 12-12.5 dBm on a DPCH channel. Spreading Factor = 16

Data Source

NodeB_RNC_RXI

Source Field

pmDpchCodePowerSf16

Source Section

RadioLinks

pmDpchCodePowerSf16_14

Number of times average transmitted code power 12.5-13 dBm on a DPCH channel. Spreading Factor = 16

Data Source

NodeB_RNC_RXI

Source Field

pmDpchCodePowerSf16

Source Section

RadioLinks

pmDpchCodePowerSf16_15

Number of times average transmitted code power 13-13.5 dBm on a DPCH channel. Spreading Factor = 16

Data Source

NodeB_RNC_RXI

Source Field

pmDpchCodePowerSf16

Source Section

RadioLinks

pmDpchCodePowerSf16_16

Number of times average transmitted code power 13.5-14 dBm on a DPCH channel. Spreading Factor = 16

Data Source

NodeB_RNC_RXI

Source Field

pmDpchCodePowerSf16

Source Section

RadioLinks

pmDpchCodePowerSf16_17

Number of times average transmitted code power 14-14.5 dBm on a DPCH channel. Spreading Factor = 16

Data Source

NodeB_RNC_RXI

Source Field

pmDpchCodePowerSf16

Source Section

RadioLinks

pmDpchCodePowerSf16_18

Number of times average transmitted code power 14.5-15 dBm on a DPCH channel. Spreading Factor = 16

Data Source

NodeB_RNC_RXI

Source Field

pmDpchCodePowerSf16

Source Section

RadioLinks

pmDpchCodePowerSf16_19

Number of times average transmitted code power 15-15.5 dBm on a DPCH channel. Spreading Factor = 16

Data Source

NodeB_RNC_RXI

Source Field

pmDpchCodePowerSf16

Source Section

RadioLinks

pmDpchCodePowerSf16_20

Number of times average transmitted code power 15.5-16 dBm on a DPCH channel. Spreading Factor = 16

Data Source

NodeB_RNC_RXI

Source Field

pmDpchCodePowerSf16

Source Section

RadioLinks

pmDpchCodePowerSf16_21

Number of times average transmitted code power 16-16.5 dBm on a DPCH channel. Spreading Factor = 16

Data Source

NodeB_RNC_RXI

Source Field

pmDpchCodePowerSf16

Source Section

RadioLinks

pmDpchCodePowerSf16_22

Number of times average transmitted code power 16.5-17 dBm on a DPCH channel. Spreading Factor = 16

Data Source

NodeB_RNC_RXI

Source Field

pmDpchCodePowerSf16

Source Section

RadioLinks

pmDpchCodePowerSf16_23

Number of times average transmitted code power 17-17.5 dBm on a DPCH channel. Spreading Factor = 16

Data Source

NodeB_RNC_RXI

Source Field

pmDpchCodePowerSf16

Source Section

RadioLinks

pmDpchCodePowerSf16_24

Number of times average transmitted code power 17.5-18 dBm on a DPCH channel. Spreading Factor = 16

Data Source

NodeB_RNC_RXI

Source Field

pmDpchCodePowerSf16

Source Section

RadioLinks

pmDpchCodePowerSf16_25

Number of times average transmitted code power 18-18.5 dBm on a DPCH channel. Spreading Factor = 16

Data Source

NodeB_RNC_RXI

Source Field

pmDpchCodePowerSf16

Source Section

RadioLinks

pmDpchCodePowerSf16_26

Number of times average transmitted code power 18.5-19 dBm on a DPCH channel. Spreading Factor = 16

Data Source

NodeB_RNC_RXI

Source Field

pmDpchCodePowerSf16

Source Section

RadioLinks

pmDpchCodePowerSf16_27

Number of times average transmitted code power 19-19.5 dBm on a DPCH channel. Spreading Factor = 16

Data Source

NodeB_RNC_RXI

Source Field

pmDpchCodePowerSf16

Source Section

RadioLinks

pmDpchCodePowerSf16_28

Number of times average transmitted code power 19.5-20 dBm on a DPCH channel. Spreading Factor = 16

Data Source

NodeB_RNC_RXI

Source Field

pmDpchCodePowerSf16

Source Section

RadioLinks

pmDpchCodePowerSf16_29

Number of times average transmitted code power 20-20.5 dBm on a DPCH channel. Spreading Factor = 16

Data Source

NodeB_RNC_RXI

Source Field

pmDpchCodePowerSf16

Source Section

RadioLinks

pmDpchCodePowerSf16_30

Number of times average transmitted code power 20.5-21 dBm on a DPCH channel. Spreading Factor = 16

Data Source

NodeB_RNC_RXI

Source Field

pmDpchCodePowerSf16

Source Section

RadioLinks

pmDpchCodePowerSf16_31

Number of times average transmitted code power 21-21.5 dBm on a DPCH channel. Spreading Factor = 16

Data Source

NodeB_RNC_RXI

Source Field

pmDpchCodePowerSf16

Source Section

RadioLinks

pmDpchCodePowerSf16_32

Number of times average transmitted code power 21.5-22 dBm on a DPCH channel. Spreading Factor = 16

Data Source

NodeB_RNC_RXI

Source Field

pmDpchCodePowerSf16

Source Section

RadioLinks

pmDpchCodePowerSf16_33

Number of times average transmitted code power 22-22.5 dBm on a DPCH channel. Spreading Factor = 16

Data Source

NodeB_RNC_RXI

Source Field

pmDpchCodePowerSf16

Source Section

RadioLinks

pmDpchCodePowerSf16_34

Number of times average transmitted code power 22.5-23 dBm on a DPCH channel. Spreading Factor = 16

Data Source

NodeB_RNC_RXI

Source Field

pmDpchCodePowerSf16

Source Section

RadioLinks

pmDpchCodePowerSf16_35

Number of times average transmitted code power 23-23.5 dBm on a DPCH channel. Spreading Factor = 16

Data Source

NodeB_RNC_RXI

Source Field

pmDpchCodePowerSf16

Source Section

RadioLinks

pmDpchCodePowerSf16_36

Number of times average transmitted code power 23.5-24 dBm on a DPCH channel. Spreading Factor = 16

Data Source

NodeB_RNC_RXI

Source Field

pmDpchCodePowerSf16

Source Section

RadioLinks

pmDpchCodePowerSf16_37

Number of times average transmitted code power 24-24.5 dBm on a DPCH channel. Spreading Factor = 16

Data Source

NodeB_RNC_RXI

Source Field

pmDpchCodePowerSf16

Source Section

RadioLinks

pmDpchCodePowerSf16_38

Number of times average transmitted code power 24.5-25 dBm on a DPCH channel. Spreading Factor = 16

Data Source

NodeB_RNC_RXI

Source Field

pmDpchCodePowerSf16

Source Section

RadioLinks

pmDpchCodePowerSf16_39

Number of times average transmitted code power 25-25.5 dBm on a DPCH channel. Spreading Factor = 16

Data Source

NodeB_RNC_RXI

Source Field

pmDpchCodePowerSf16

Source Section

RadioLinks

pmDpchCodePowerSf16_40

Number of times average transmitted code power 25.5-26 dBm on a DPCH channel. Spreading Factor = 16

Data Source

NodeB_RNC_RXI

Source Field

pmDpchCodePowerSf16

Source Section

RadioLinks

pmDpchCodePowerSf16_41

Number of times average transmitted code power 26-26.5 dBm on a DPCH channel. Spreading Factor = 16

Data Source

NodeB_RNC_RXI

Source Field

pmDpchCodePowerSf16

Source Section

RadioLinks

pmDpchCodePowerSf16_42

Number of times average transmitted code power 26.5-27 dBm on a DPCH channel. Spreading Factor = 16

Data Source

NodeB_RNC_RXI

Source Field

pmDpchCodePowerSf16

Source Section

RadioLinks

pmDpchCodePowerSf16_43

Number of times average transmitted code power 27-27.5 dBm on a DPCH channel. Spreading Factor = 16

Data Source

NodeB_RNC_RXI

Source Field

pmDpchCodePowerSf16

Source Section

RadioLinks

pmDpchCodePowerSf16_44

Number of times average transmitted code power 27.5-28 dBm on a DPCH channel. Spreading Factor = 16

Data Source

NodeB_RNC_RXI

Source Field

pmDpchCodePowerSf16

Source Section

RadioLinks

pmDpchCodePowerSf16_45

Number of times average transmitted code power 28-28.5 dBm on a DPCH channel. Spreading Factor = 16

Data Source

NodeB_RNC_RXI

Source Field

pmDpchCodePowerSf16

Source Section

RadioLinks

pmDpchCodePowerSf16_46

Number of times average transmitted code power 28.5-29 dBm on a DPCH channel. Spreading Factor = 16

Data Source

NodeB_RNC_RXI

Source Field

pmDpchCodePowerSf16

Source Section

RadioLinks

pmDpchCodePowerSf16_47

Number of times average transmitted code power 29-29.5 dBm on a DPCH channel. Spreading Factor = 16

Data Source

NodeB_RNC_RXI

Source Field

pmDpchCodePowerSf16

Source Section

RadioLinks

pmDpchCodePowerSf16_48

Number of times average transmitted code power 29.5-30 dBm on a DPCH channel. Spreading Factor = 16

Data Source

NodeB_RNC_RXI

Source Field

pmDpchCodePowerSf16

Source Section

RadioLinks

pmDpchCodePowerSf16_49

Number of times average transmitted code power 30-30.5 dBm on a DPCH channel. Spreading Factor = 16

Data Source

NodeB_RNC_RXI

Source Field

pmDpchCodePowerSf16

Source Section

RadioLinks

pmDpchCodePowerSf16_50

Number of times average transmitted code power 30.5-31 dBm on a DPCH channel. Spreading Factor = 16

Data Source

NodeB_RNC_RXI

Source Field

pmDpchCodePowerSf16

Source Section

RadioLinks

pmDpchCodePowerSf16_51

Number of times average transmitted code power 31-31.5 dBm on a DPCH channel. Spreading Factor = 16

Data Source

NodeB_RNC_RXI

Source Field

pmDpchCodePowerSf16

Source Section

RadioLinks

pmDpchCodePowerSf16_52

Number of times average transmitted code power 31.5-32 dBm on a DPCH channel. Spreading Factor = 16

Data Source

NodeB_RNC_RXI

Source Field

pmDpchCodePowerSf16

Source Section

RadioLinks

pmDpchCodePowerSf16_53

Number of times average transmitted code power 32-32.5 dBm on a DPCH channel. Spreading Factor = 16

Data Source

NodeB_RNC_RXI

Source Field

pmDpchCodePowerSf16

Source Section

RadioLinks

pmDpchCodePowerSf16_54

Number of times average transmitted code power 32.5-33 dBm on a DPCH channel. Spreading Factor = 16

Data Source

NodeB_RNC_RXI

Source Field

pmDpchCodePowerSf16

Source Section

RadioLinks

pmDpchCodePowerSf16_55

Number of times average transmitted code power 33-33.5 dBm on a DPCH channel. Spreading Factor = 16

Data Source

NodeB_RNC_RXI

Source Field

pmDpchCodePowerSf16

Source Section

RadioLinks

pmDpchCodePowerSf16_56

Number of times average transmitted code power 33.5-34 dBm on a DPCH channel. Spreading Factor = 16

Data Source

NodeB_RNC_RXI

Source Field

pmDpchCodePowerSf16

Source Section

RadioLinks

pmDpchCodePowerSf16_57

Number of times average transmitted code power 34-34.5 dBm on a DPCH channel. Spreading Factor = 16

Data Source

NodeB_RNC_RXI

Source Field

pmDpchCodePowerSf16

Source Section

RadioLinks

pmDpchCodePowerSf16_58

Number of times average transmitted code power 34.5-35 dBm on a DPCH channel. Spreading Factor = 16

Data Source

NodeB_RNC_RXI

Source Field

pmDpchCodePowerSf16

Source Section

RadioLinks

pmDpchCodePowerSf16_59

Number of times average transmitted code power 35-35.5 dBm on a DPCH channel. Spreading Factor = 16

Data Source

NodeB_RNC_RXI

Source Field

pmDpchCodePowerSf16

Source Section

RadioLinks

pmDpchCodePowerSf16_60

Number of times average transmitted code power 35.5-36 dBm on a DPCH channel. Spreading Factor = 16

Data Source

NodeB_RNC_RXI

Source Field

pmDpchCodePowerSf16

Source Section

RadioLinks

pmDpchCodePowerSf16_61

Number of times average transmitted code power 36-36.5 dBm on a DPCH channel. Spreading Factor = 16

Data Source

NodeB_RNC_RXI

Source Field

pmDpchCodePowerSf16

Source Section

RadioLinks

pmDpchCodePowerSf16_62

Number of times average transmitted code power 36.5-37 dBm on a DPCH channel. Spreading Factor = 16

Data Source

NodeB_RNC_RXI

Source Field

pmDpchCodePowerSf16

Source Section

RadioLinks

pmDpchCodePowerSf16_63

Number of times average transmitted code power 37-37.5 dBm on a DPCH channel. Spreading Factor = 16

Data Source

NodeB_RNC_RXI

Source Field

pmDpchCodePowerSf16

Source Section

RadioLinks

pmDpchCodePowerSf16_64

Number of times average transmitted code power 37.5-38 dBm on a DPCH channel. Spreading Factor = 16

Data Source

NodeB_RNC_RXI

Source Field

pmDpchCodePowerSf16

Source Section

RadioLinks

pmDpchCodePowerSf16_65

Number of times average transmitted code power 38-38.5 dBm on a DPCH channel. Spreading Factor = 16

Data Source

NodeB_RNC_RXI

Source Field

pmDpchCodePowerSf16

Source Section

RadioLinks

pmDpchCodePowerSf16_66

Number of times average transmitted code power 38.5-39 dBm on a DPCH channel. Spreading Factor = 16

Data Source

NodeB_RNC_RXI

Source Field

pmDpchCodePowerSf16

Source Section

RadioLinks

pmDpchCodePowerSf16_67

Number of times average transmitted code power 39-39.5 dBm on a DPCH channel. Spreading Factor = 16

Data Source

NodeB_RNC_RXI

Source Field

pmDpchCodePowerSf16

Source Section

RadioLinks

pmDpchCodePowerSf16_68

Number of times average transmitted code power 39.5-40 dBm on a DPCH channel. Spreading Factor = 16

Data Source

NodeB_RNC_RXI

Source Field

pmDpchCodePowerSf16

Source Section

RadioLinks

pmDpchCodePowerSf16_69

Number of times average transmitted code power 40-40.5 dBm on a DPCH channel. Spreading Factor = 16

Data Source

NodeB_RNC_RXI

Source Field

pmDpchCodePowerSf16

Source Section

RadioLinks

pmDpchCodePowerSf16_70

Number of times average transmitted code power 40.5-41 dBm on a DPCH channel. Spreading Factor = 16

Data Source

NodeB_RNC_RXI

Source Field

pmDpchCodePowerSf16

Source Section

RadioLinks

pmDpchCodePowerSf16_71

Number of times average transmitted code power 41-41.5 dBm on a DPCH channel. Spreading Factor = 16

Data Source

NodeB_RNC_RXI

Source Field

pmDpchCodePowerSf16

Source Section

RadioLinks

pmDpchCodePowerSf16_72

Number of times average transmitted code power 41.5-42 dBm on a DPCH channel. Spreading Factor = 16

Data Source

NodeB_RNC_RXI

Source Field

pmDpchCodePowerSf16

Source Section

RadioLinks

pmDpchCodePowerSf16_73

Number of times average transmitted code power 42-42.5 dBm on a DPCH channel. Spreading Factor = 16

Data Source

NodeB_RNC_RXI

Source Field

pmDpchCodePowerSf16

Source Section

RadioLinks

pmDpchCodePowerSf16_74

Number of times average transmitted code power 42.5-43 dBm on a DPCH channel. Spreading Factor = 16

Data Source

NodeB_RNC_RXI

Source Field

pmDpchCodePowerSf16

Source Section

RadioLinks

pmDpchCodePowerSf256_00

Number of times average transmitted code power 0-6 dBm on a DPCH channel. Spreading Factor = 256

Data Source

NodeB_RNC_RXI

Source Field

pmDpchCodePowerSf256

Source Section

RadioLinks

pmDpchCodePowerSf256_01

Number of times average transmitted code power 6-6.5 dBm on a DPCH channel. Spreading Factor = 256

Data Source

NodeB_RNC_RXI

Source Field

pmDpchCodePowerSf256

Source Section

RadioLinks

pmDpchCodePowerSf256_02

Number of times average transmitted code power 6.5-7 dBm on a DPCH channel. Spreading Factor = 256

Data Source

NodeB_RNC_RXI

Source Field

pmDpchCodePowerSf256

Source Section

RadioLinks

pmDpchCodePowerSf256_03

Number of times average transmitted code power 7-7.5 dBm on a DPCH channel. Spreading Factor = 256

Data Source

NodeB_RNC_RXI

Source Field

pmDpchCodePowerSf256

Source Section

RadioLinks

pmDpchCodePowerSf256_04

Number of times average transmitted code power 7.5-8 dBm on a DPCH channel. Spreading Factor = 256

Data Source

NodeB_RNC_RXI

Source Field

pmDpchCodePowerSf256

Source Section

RadioLinks

pmDpchCodePowerSf256_05

Number of times average transmitted code power 8-8.5 dBm on a DPCH channel. Spreading Factor = 256

Data Source

NodeB_RNC_RXI

Source Field

pmDpchCodePowerSf256

Source Section

RadioLinks

pmDpchCodePowerSf256_06

Number of times average transmitted code power 8.5-9 dBm on a DPCH channel. Spreading Factor = 256

Data Source

NodeB_RNC_RXI

Source Field

pmDpchCodePowerSf256

Source Section

RadioLinks

pmDpchCodePowerSf256_07

Number of times average transmitted code power 9-9.5 dBm on a DPCH channel. Spreading Factor = 256

Data Source

NodeB_RNC_RXI

Source Field

pmDpchCodePowerSf256

Source Section

RadioLinks

pmDpchCodePowerSf256_08

Number of times average transmitted code power 9.5-10 dBm on a DPCH channel. Spreading Factor = 256

Data Source

NodeB_RNC_RXI

Source Field

pmDpchCodePowerSf256

Source Section

RadioLinks

pmDpchCodePowerSf256_09

Number of times average transmitted code power 10-10.5 dBm on a DPCH channel. Spreading Factor = 256

Data Source

NodeB_RNC_RXI

Source Field

pmDpchCodePowerSf256

Source Section

RadioLinks

pmDpchCodePowerSf256_10

Number of times average transmitted code power 10.5-11 dBm on a DPCH channel. Spreading Factor = 256

Data Source

NodeB_RNC_RXI

Source Field

pmDpchCodePowerSf256

Source Section

RadioLinks

pmDpchCodePowerSf256_11

Number of times average transmitted code power 11-11.5 dBm on a DPCH channel. Spreading Factor = 256

Data Source

NodeB_RNC_RXI

Source Field

pmDpchCodePowerSf256

Source Section

RadioLinks

pmDpchCodePowerSf256_12

Number of times average transmitted code power 11.5-12 dBm on a DPCH channel. Spreading Factor = 256

Data Source

NodeB_RNC_RXI

Source Field

pmDpchCodePowerSf256

Source Section

RadioLinks

pmDpchCodePowerSf256_13

Number of times average transmitted code power 12-12.5 dBm on a DPCH channel. Spreading Factor = 256

Data Source

NodeB_RNC_RXI

Source Field

pmDpchCodePowerSf256

Source Section

RadioLinks

pmDpchCodePowerSf256_14

Number of times average transmitted code power 12.5-13 dBm on a DPCH channel. Spreading Factor = 256

Data Source

NodeB_RNC_RXI

Source Field

pmDpchCodePowerSf256

Source Section

RadioLinks

pmDpchCodePowerSf256_15

Number of times average transmitted code power 13-13.5 dBm on a DPCH channel. Spreading Factor = 256

Data Source

NodeB_RNC_RXI

Source Field

pmDpchCodePowerSf256

Source Section

RadioLinks

pmDpchCodePowerSf256_16

Number of times average transmitted code power 13.5-14 dBm on a DPCH channel. Spreading Factor = 256

Data Source

NodeB_RNC_RXI

Source Field

pmDpchCodePowerSf256

Source Section

RadioLinks

pmDpchCodePowerSf256_17

Number of times average transmitted code power 14-14.5 dBm on a DPCH channel. Spreading Factor = 256

Data Source

NodeB_RNC_RXI

Source Field

pmDpchCodePowerSf256

Source Section

RadioLinks

pmDpchCodePowerSf256_18

Number of times average transmitted code power 14.5-15 dBm on a DPCH channel. Spreading Factor = 256

Data Source

NodeB_RNC_RXI

Source Field

pmDpchCodePowerSf256

Source Section

RadioLinks

pmDpchCodePowerSf256_19

Number of times average transmitted code power 15-15.5 dBm on a DPCH channel. Spreading Factor = 256

Data Source

NodeB_RNC_RXI

Source Field

pmDpchCodePowerSf256

Source Section

RadioLinks

pmDpchCodePowerSf256_20

Number of times average transmitted code power 15.5-16 dBm on a DPCH channel. Spreading Factor = 256

Data Source

NodeB_RNC_RXI

Source Field

pmDpchCodePowerSf256

Source Section

RadioLinks

pmDpchCodePowerSf256_21

Number of times average transmitted code power 16-16.5 dBm on a DPCH channel. Spreading Factor = 256

Data Source

NodeB_RNC_RXI

Source Field

pmDpchCodePowerSf256

Source Section

RadioLinks

pmDpchCodePowerSf256_22

Number of times average transmitted code power 16.5-17 dBm on a DPCH channel. Spreading Factor = 256

Data Source

NodeB_RNC_RXI

Source Field

pmDpchCodePowerSf256

Source Section

RadioLinks

pmDpchCodePowerSf256_23

Number of times average transmitted code power 17-17.5 dBm on a DPCH channel. Spreading Factor = 256

Data Source

NodeB_RNC_RXI

Source Field

pmDpchCodePowerSf256

Source Section

RadioLinks

pmDpchCodePowerSf256_24

Number of times average transmitted code power 17.5-18 dBm on a DPCH channel. Spreading Factor = 256

Data Source

NodeB_RNC_RXI

Source Field

pmDpchCodePowerSf256

Source Section

RadioLinks

pmDpchCodePowerSf256_25

Number of times average transmitted code power 18-18.5 dBm on a DPCH channel. Spreading Factor = 256

Data Source

NodeB_RNC_RXI

Source Field

pmDpchCodePowerSf256

Source Section

RadioLinks

pmDpchCodePowerSf256_26

Number of times average transmitted code power 18.5-19 dBm on a DPCH channel. Spreading Factor = 256

Data Source

NodeB_RNC_RXI

Source Field

pmDpchCodePowerSf256

Source Section

RadioLinks

pmDpchCodePowerSf256_27

Number of times average transmitted code power 19-19.5 dBm on a DPCH channel. Spreading Factor = 256

Data Source

NodeB_RNC_RXI

Source Field

pmDpchCodePowerSf256

Source Section

RadioLinks

pmDpchCodePowerSf256_28

Number of times average transmitted code power 19.5-20 dBm on a DPCH channel. Spreading Factor = 256

Data Source

NodeB_RNC_RXI

Source Field

pmDpchCodePowerSf256

Source Section

RadioLinks

pmDpchCodePowerSf256_29

Number of times average transmitted code power 20-20.5 dBm on a DPCH channel. Spreading Factor = 256

Data Source

NodeB_RNC_RXI

Source Field

pmDpchCodePowerSf256

Source Section

RadioLinks

pmDpchCodePowerSf256_30

Number of times average transmitted code power 20.5-21 dBm on a DPCH channel. Spreading Factor = 256

Data Source

NodeB_RNC_RXI

Source Field

pmDpchCodePowerSf256

Source Section

RadioLinks

pmDpchCodePowerSf256_31

Number of times average transmitted code power 21-21.5 dBm on a DPCH channel. Spreading Factor = 256

Data Source

NodeB_RNC_RXI

Source Field

pmDpchCodePowerSf256

Source Section

RadioLinks

pmDpchCodePowerSf256_32

Number of times average transmitted code power 21.5-22 dBm on a DPCH channel. Spreading Factor = 256

Data Source

NodeB_RNC_RXI

Source Field

pmDpchCodePowerSf256

Source Section

RadioLinks

pmDpchCodePowerSf256_33

Number of times average transmitted code power 22-22.5 dBm on a DPCH channel. Spreading Factor = 256

Data Source

NodeB_RNC_RXI

Source Field

pmDpchCodePowerSf256

Source Section

RadioLinks

pmDpchCodePowerSf256_34

Number of times average transmitted code power 22.5-23 dBm on a DPCH channel. Spreading Factor = 256

Data Source

NodeB_RNC_RXI

Source Field

pmDpchCodePowerSf256

Source Section

RadioLinks

pmDpchCodePowerSf256_35

Number of times average transmitted code power 23-23.5 dBm on a DPCH channel. Spreading Factor = 256

Data Source

NodeB_RNC_RXI

Source Field

pmDpchCodePowerSf256

Source Section

RadioLinks

pmDpchCodePowerSf256_36

Number of times average transmitted code power 23.5-24 dBm on a DPCH channel. Spreading Factor = 256

Data Source

NodeB_RNC_RXI

Source Field

pmDpchCodePowerSf256

Source Section

RadioLinks

pmDpchCodePowerSf256_37

Number of times average transmitted code power 24-24.5 dBm on a DPCH channel. Spreading Factor = 256

Data Source

NodeB_RNC_RXI

Source Field

pmDpchCodePowerSf256

Source Section

RadioLinks

pmDpchCodePowerSf256_38

Number of times average transmitted code power 24.5-25 dBm on a DPCH channel. Spreading Factor = 256

Data Source

NodeB_RNC_RXI

Source Field

pmDpchCodePowerSf256

Source Section

RadioLinks

pmDpchCodePowerSf256_39

Number of times average transmitted code power 25-25.5 dBm on a DPCH channel. Spreading Factor = 256

Data Source

NodeB_RNC_RXI

Source Field

pmDpchCodePowerSf256

Source Section

RadioLinks

pmDpchCodePowerSf256_40

Number of times average transmitted code power 25.5-26 dBm on a DPCH channel. Spreading Factor = 256

Data Source

NodeB_RNC_RXI

Source Field

pmDpchCodePowerSf256

Source Section

RadioLinks

pmDpchCodePowerSf256_41

Number of times average transmitted code power 26-26.5 dBm on a DPCH channel. Spreading Factor = 256

Data Source

NodeB_RNC_RXI

Source Field

pmDpchCodePowerSf256

Source Section

RadioLinks

pmDpchCodePowerSf256_42

Number of times average transmitted code power 26.5-27 dBm on a DPCH channel. Spreading Factor = 256

Data Source

NodeB_RNC_RXI

Source Field

pmDpchCodePowerSf256

Source Section

RadioLinks

pmDpchCodePowerSf256_43

Number of times average transmitted code power 27-27.5 dBm on a DPCH channel. Spreading Factor = 256

Data Source

NodeB_RNC_RXI

Source Field

pmDpchCodePowerSf256

Source Section

RadioLinks

pmDpchCodePowerSf256_44

Number of times average transmitted code power 27.5-28 dBm on a DPCH channel. Spreading Factor = 256

Data Source

NodeB_RNC_RXI

Source Field

pmDpchCodePowerSf256

Source Section

RadioLinks

pmDpchCodePowerSf256_45

Number of times average transmitted code power 28-28.5 dBm on a DPCH channel. Spreading Factor = 256

Data Source

NodeB_RNC_RXI

Source Field

pmDpchCodePowerSf256

Source Section

RadioLinks

pmDpchCodePowerSf256_46

Number of times average transmitted code power 28.5-29 dBm on a DPCH channel. Spreading Factor = 256

Data Source

NodeB_RNC_RXI

Source Field

pmDpchCodePowerSf256

Source Section

RadioLinks

pmDpchCodePowerSf256_47

Number of times average transmitted code power 29-29.5 dBm on a DPCH channel. Spreading Factor = 256

Data Source

NodeB_RNC_RXI

Source Field

pmDpchCodePowerSf256

Source Section

RadioLinks

pmDpchCodePowerSf256_48

Number of times average transmitted code power 29.5-30 dBm on a DPCH channel. Spreading Factor = 256

Data Source

NodeB_RNC_RXI

Source Field

pmDpchCodePowerSf256

Source Section

RadioLinks

pmDpchCodePowerSf256_49

Number of times average transmitted code power 30-30.5 dBm on a DPCH channel. Spreading Factor = 256

Data Source

NodeB_RNC_RXI

Source Field

pmDpchCodePowerSf256

Source Section

RadioLinks

pmDpchCodePowerSf256_50

Number of times average transmitted code power 30.5-31 dBm on a DPCH channel. Spreading Factor = 256

Data Source

NodeB_RNC_RXI

Source Field

pmDpchCodePowerSf256

Source Section

RadioLinks

pmDpchCodePowerSf256_51

Number of times average transmitted code power 31-31.5 dBm on a DPCH channel. Spreading Factor = 256

Data Source

NodeB_RNC_RXI

Source Field

pmDpchCodePowerSf256

Source Section

RadioLinks

pmDpchCodePowerSf256_52

Number of times average transmitted code power 31.5-32 dBm on a DPCH channel. Spreading Factor = 256

Data Source

NodeB_RNC_RXI

Source Field

pmDpchCodePowerSf256

Source Section

RadioLinks

pmDpchCodePowerSf256_53

Number of times average transmitted code power 32-32.5 dBm on a DPCH channel. Spreading Factor = 256

Data Source

NodeB_RNC_RXI

Source Field

pmDpchCodePowerSf256

Source Section

RadioLinks

pmDpchCodePowerSf256_54

Number of times average transmitted code power 32.5-33 dBm on a DPCH channel. Spreading Factor = 256

Data Source

NodeB_RNC_RXI

Source Field

pmDpchCodePowerSf256

Source Section

RadioLinks

pmDpchCodePowerSf256_55

Number of times average transmitted code power 33-33.5 dBm on a DPCH channel. Spreading Factor = 256

Data Source

NodeB_RNC_RXI

Source Field

pmDpchCodePowerSf256

Source Section

RadioLinks

pmDpchCodePowerSf256_56

Number of times average transmitted code power 33.5-34 dBm on a DPCH channel. Spreading Factor = 256

Data Source

NodeB_RNC_RXI

Source Field

pmDpchCodePowerSf256

Source Section

RadioLinks

pmDpchCodePowerSf256_57

Number of times average transmitted code power 34-34.5 dBm on a DPCH channel. Spreading Factor = 256

© Copyright IBM Corp. 2008, 2009. All Rights Reserved.

Data Source

NodeB_RNC_RXI

Source Field

pmDpchCodePowerSf256

Source Section

RadioLinks

pmDpchCodePowerSf256_58

Number of times average transmitted code power 34.5-35 dBm on a DPCH channel. Spreading Factor = 256

Data Source

NodeB_RNC_RXI

Source Field

pmDpchCodePowerSf256

Source Section

RadioLinks

pmDpchCodePowerSf256_59

Number of times average transmitted code power 35-35.5 dBm on a DPCH channel. Spreading Factor = 256

Data Source

NodeB_RNC_RXI

Source Field

pmDpchCodePowerSf256

Source Section

RadioLinks

pmDpchCodePowerSf256_60

Number of times average transmitted code power 35.5-36 dBm on a DPCH channel. Spreading Factor = 256

Data Source

NodeB_RNC_RXI

Source Field

pmDpchCodePowerSf256

Source Section

RadioLinks

pmDpchCodePowerSf256_61

Number of times average transmitted code power 36-36.5 dBm on a DPCH channel. Spreading Factor = 256

Data Source

NodeB_RNC_RXI

Source Field

pmDpchCodePowerSf256

Source Section

RadioLinks

pmDpchCodePowerSf256_62

Number of times average transmitted code power 36.5-37 dBm on a DPCH channel. Spreading Factor = 256

Data Source

NodeB_RNC_RXI

Source Field

pmDpchCodePowerSf256

Source Section

RadioLinks

pmDpchCodePowerSf256_63

Number of times average transmitted code power 37-37.5 dBm on a DPCH channel. Spreading Factor = 256

© Copyright IBM Corp. 2008, 2009. All Rights Reserved.

Data Source

NodeB_RNC_RXI

Source Field

pmDpchCodePowerSf256

Source Section

RadioLinks

pmDpchCodePowerSf256_64

Number of times average transmitted code power 37.5-38 dBm on a DPCH channel. Spreading Factor = 256

Data Source

NodeB_RNC_RXI

Source Field

pmDpchCodePowerSf256

Source Section

RadioLinks

pmDpchCodePowerSf256_65

Number of times average transmitted code power 38-38.5 dBm on a DPCH channel. Spreading Factor = 256

Data Source

NodeB_RNC_RXI

Source Field

pmDpchCodePowerSf256

Source Section

RadioLinks

pmDpchCodePowerSf256_66

Number of times average transmitted code power 38.5-39 dBm on a DPCH channel. Spreading Factor = 256

Data Source

NodeB_RNC_RXI

Source Field

pmDpchCodePowerSf256

Source Section

RadioLinks

pmDpchCodePowerSf256_67

Number of times average transmitted code power 39-39.5 dBm on a DPCH channel. Spreading Factor = 256

Data Source

NodeB_RNC_RXI

Source Field

pmDpchCodePowerSf256

Source Section

RadioLinks

pmDpchCodePowerSf256_68

Number of times average transmitted code power 39.5-40 dBm on a DPCH channel. Spreading Factor = 256

Data Source

NodeB_RNC_RXI

Source Field

pmDpchCodePowerSf256

Source Section

RadioLinks

pmDpchCodePowerSf256_69

Number of times average transmitted code power 40-40.5 dBm on a DPCH channel. Spreading Factor = 256

© Copyright IBM Corp. 2008, 2009. All Rights Reserved.

Data Source

NodeB_RNC_RXI

Source Field

pmDpchCodePowerSf256

Source Section

RadioLinks

pmDpchCodePowerSf256_70

Number of times average transmitted code power 40.5-41 dBm on a DPCH channel. Spreading Factor = 256

Data Source

NodeB_RNC_RXI

Source Field

pmDpchCodePowerSf256

Source Section

RadioLinks

pmDpchCodePowerSf256_71

Number of times average transmitted code power 41-41.5 dBm on a DPCH channel. Spreading Factor = 256

Data Source

NodeB_RNC_RXI

Source Field

pmDpchCodePowerSf256

Source Section

RadioLinks

pmDpchCodePowerSf256_72

Number of times average transmitted code power 41.5-42 dBm on a DPCH channel. Spreading Factor = 256

Data Source

NodeB_RNC_RXI

Source Field

pmDpchCodePowerSf256

Source Section

RadioLinks

pmDpchCodePowerSf256_73

Number of times average transmitted code power 42-42.5 dBm on a DPCH channel. Spreading Factor = 256

Data Source

NodeB_RNC_RXI

Source Field

pmDpchCodePowerSf256

Source Section

RadioLinks

pmDpchCodePowerSf256_74

Number of times average transmitted code power 42.5-43 dBm on a DPCH channel. Spreading Factor = 256

Data Source

NodeB_RNC_RXI

Source Field

pmDpchCodePowerSf256

Source Section

RadioLinks

pmDpchCodePowerSf32_00

Number of times average transmitted code power 0-6 dBm on a DPCH channel. Spreading Factor = 32

© Copyright IBM Corp. 2008, 2009. All Rights Reserved.

Data Source

NodeB_RNC_RXI

Source Field

pmDpchCodePowerSf32

Source Section

RadioLinks

pmDpchCodePowerSf32_01

Number of times average transmitted code power 6-6.5 dBm on a DPCH channel. Spreading Factor = 32

Data Source

NodeB_RNC_RXI

Source Field

pmDpchCodePowerSf32

Source Section

RadioLinks

pmDpchCodePowerSf32_02

Number of times average transmitted code power 6.5-7 dBm on a DPCH channel. Spreading Factor = 32

Data Source

NodeB_RNC_RXI

Source Field

pmDpchCodePowerSf32

Source Section

RadioLinks

pmDpchCodePowerSf32_03

Number of times average transmitted code power 7-7.5 dBm on a DPCH channel. Spreading Factor = 32

Data Source

NodeB_RNC_RXI

Source Field

pmDpchCodePowerSf32

Source Section

RadioLinks

pmDpchCodePowerSf32_04

Number of times average transmitted code power 7.5-8 dBm on a DPCH channel. Spreading Factor = 32

Data Source

NodeB_RNC_RXI

Source Field

pmDpchCodePowerSf32

Source Section

RadioLinks

pmDpchCodePowerSf32_05

Number of times average transmitted code power 8-8.5 dBm on a DPCH channel. Spreading Factor = 32

Data Source

NodeB_RNC_RXI

Source Field

pmDpchCodePowerSf32

Source Section

RadioLinks

pmDpchCodePowerSf32_06

Number of times average transmitted code power 8.5-9 dBm on a DPCH channel. Spreading Factor = 32

© Copyright IBM Corp. 2008, 2009. All Rights Reserved.

Data Source

NodeB_RNC_RXI

Source Field

pmDpchCodePowerSf32

Source Section

RadioLinks

pmDpchCodePowerSf32_07

Number of times average transmitted code power 9-9.5 dBm on a DPCH channel. Spreading Factor = 32

Data Source

NodeB_RNC_RXI

Source Field

pmDpchCodePowerSf32

Source Section

RadioLinks

pmDpchCodePowerSf32_08

Number of times average transmitted code power 9.5-10 dBm on a DPCH channel. Spreading Factor = 32

Data Source

NodeB_RNC_RXI

Source Field

pmDpchCodePowerSf32

Source Section

RadioLinks

pmDpchCodePowerSf32_09

Number of times average transmitted code power 10-10.5 dBm on a DPCH channel. Spreading Factor = 32

Data Source

NodeB_RNC_RXI

Source Field

pmDpchCodePowerSf32

Source Section

RadioLinks

pmDpchCodePowerSf32_10

Number of times average transmitted code power 10.5-11 dBm on a DPCH channel. Spreading Factor = 32

Data Source

NodeB_RNC_RXI

Source Field

pmDpchCodePowerSf32

Source Section

RadioLinks

pmDpchCodePowerSf32_11

Number of times average transmitted code power 11-11.5 dBm on a DPCH channel. Spreading Factor = 32

Data Source

NodeB_RNC_RXI

Source Field

pmDpchCodePowerSf32

Source Section

RadioLinks

pmDpchCodePowerSf32_12

Number of times average transmitted code power 11.5-12 dBm on a DPCH channel. Spreading Factor = 32

© Copyright IBM Corp. 2008, 2009. All Rights Reserved.

Data Source

NodeB_RNC_RXI

Source Field

pmDpchCodePowerSf32

Source Section

RadioLinks

pmDpchCodePowerSf32_13

Number of times average transmitted code power 12-12.5 dBm on a DPCH channel. Spreading Factor = 32

Data Source

NodeB_RNC_RXI

Source Field

pmDpchCodePowerSf32

Source Section

RadioLinks

pmDpchCodePowerSf32_14

Number of times average transmitted code power 12.5-13 dBm on a DPCH channel. Spreading Factor = 32

Data Source

NodeB_RNC_RXI

Source Field

pmDpchCodePowerSf32

Source Section

RadioLinks

pmDpchCodePowerSf32_15

Number of times average transmitted code power 13-13.5 dBm on a DPCH channel. Spreading Factor = 32

Data Source

NodeB_RNC_RXI

Source Field

pmDpchCodePowerSf32

Source Section

RadioLinks

pmDpchCodePowerSf32_16

Number of times average transmitted code power 13.5-14 dBm on a DPCH channel. Spreading Factor = 32

Data Source

NodeB_RNC_RXI

Source Field

pmDpchCodePowerSf32

Source Section

RadioLinks

pmDpchCodePowerSf32_17

Number of times average transmitted code power 14-14.5 dBm on a DPCH channel. Spreading Factor = 32

Data Source

NodeB_RNC_RXI

Source Field

pmDpchCodePowerSf32

Source Section

RadioLinks

pmDpchCodePowerSf32_18

Number of times average transmitted code power 14.5-15 dBm on a DPCH channel. Spreading Factor = 32

© Copyright IBM Corp. 2008, 2009. All Rights Reserved.

Data Source

NodeB_RNC_RXI

Source Field

pmDpchCodePowerSf32

Source Section

RadioLinks

pmDpchCodePowerSf32_19

Number of times average transmitted code power 15-15.5 dBm on a DPCH channel. Spreading Factor = 32

Data Source

NodeB_RNC_RXI

Source Field

pmDpchCodePowerSf32

Source Section

RadioLinks

pmDpchCodePowerSf32_20

Number of times average transmitted code power 15.5-16 dBm on a DPCH channel. Spreading Factor = 32

Data Source

NodeB_RNC_RXI

Source Field

pmDpchCodePowerSf32

Source Section

RadioLinks

pmDpchCodePowerSf32_21

Number of times average transmitted code power 16-16.5 dBm on a DPCH channel. Spreading Factor = 32

Data Source

NodeB_RNC_RXI

Source Field

pmDpchCodePowerSf32

Source Section

RadioLinks

pmDpchCodePowerSf32_22

Number of times average transmitted code power 16.5-17 dBm on a DPCH channel. Spreading Factor = 32

Data Source

NodeB_RNC_RXI

Source Field

pmDpchCodePowerSf32

Source Section

RadioLinks

pmDpchCodePowerSf32_23

Number of times average transmitted code power 17-17.5 dBm on a DPCH channel. Spreading Factor = 32

Data Source

NodeB_RNC_RXI

Source Field

pmDpchCodePowerSf32

Source Section

RadioLinks

pmDpchCodePowerSf32_24

Number of times average transmitted code power 17.5-18 dBm on a DPCH channel. Spreading Factor = 32

© Copyright IBM Corp. 2008, 2009. All Rights Reserved.

Data Source

NodeB_RNC_RXI

Source Field

pmDpchCodePowerSf32

Source Section

RadioLinks

pmDpchCodePowerSf32_25

Number of times average transmitted code power 18-18.5 dBm on a DPCH channel. Spreading Factor = 32

Data Source

NodeB_RNC_RXI

Source Field

pmDpchCodePowerSf32

Source Section

RadioLinks

pmDpchCodePowerSf32_26

Number of times average transmitted code power 18.5-19 dBm on a DPCH channel. Spreading Factor = 32

Data Source

NodeB_RNC_RXI

Source Field

pmDpchCodePowerSf32

Source Section

RadioLinks

pmDpchCodePowerSf32_27

Number of times average transmitted code power 19-19.5 dBm on a DPCH channel. Spreading Factor = 32

Data Source

NodeB_RNC_RXI

Source Field

pmDpchCodePowerSf32

Source Section

RadioLinks

pmDpchCodePowerSf32_28

Number of times average transmitted code power 19.5-20 dBm on a DPCH channel. Spreading Factor = 32

Data Source

NodeB_RNC_RXI

Source Field

pmDpchCodePowerSf32

Source Section

RadioLinks

pmDpchCodePowerSf32_29

Number of times average transmitted code power 20-20.5 dBm on a DPCH channel. Spreading Factor = 32

Data Source

NodeB_RNC_RXI

Source Field

pmDpchCodePowerSf32

Source Section

RadioLinks

pmDpchCodePowerSf32_30

Number of times average transmitted code power 20.5-21 dBm on a DPCH channel. Spreading Factor = 32

© Copyright IBM Corp. 2008, 2009. All Rights Reserved.

Data Source

NodeB_RNC_RXI

Source Field

pmDpchCodePowerSf32

Source Section

RadioLinks

pmDpchCodePowerSf32_31

Number of times average transmitted code power 21-21.5 dBm on a DPCH channel. Spreading Factor = 32

Data Source

NodeB_RNC_RXI

Source Field

pmDpchCodePowerSf32

Source Section

RadioLinks

pmDpchCodePowerSf32_32

Number of times average transmitted code power 21.5-22 dBm on a DPCH channel. Spreading Factor = 32

Data Source

NodeB_RNC_RXI

Source Field

pmDpchCodePowerSf32

Source Section

RadioLinks

pmDpchCodePowerSf32_33

Number of times average transmitted code power 22-22.5 dBm on a DPCH channel. Spreading Factor = 32

Data Source

NodeB_RNC_RXI

Source Field

pmDpchCodePowerSf32

Source Section

RadioLinks

pmDpchCodePowerSf32_34

Number of times average transmitted code power 22.5-23 dBm on a DPCH channel. Spreading Factor = 32

Data Source

NodeB_RNC_RXI

Source Field

pmDpchCodePowerSf32

Source Section

RadioLinks

pmDpchCodePowerSf32_35

Number of times average transmitted code power 23-23.5 dBm on a DPCH channel. Spreading Factor = 32

Data Source

NodeB_RNC_RXI

Source Field

pmDpchCodePowerSf32

Source Section

RadioLinks

pmDpchCodePowerSf32_36

Number of times average transmitted code power 23.5-24 dBm on a DPCH channel. Spreading Factor = 32

© Copyright IBM Corp. 2008, 2009. All Rights Reserved.

Data Source

NodeB_RNC_RXI

Source Field

pmDpchCodePowerSf32

Source Section

RadioLinks

pmDpchCodePowerSf32_37

Number of times average transmitted code power 24-24.5 dBm on a DPCH channel. Spreading Factor = 32

Data Source

NodeB_RNC_RXI

Source Field

pmDpchCodePowerSf32

Source Section

RadioLinks

pmDpchCodePowerSf32_38

Number of times average transmitted code power 24.5-25 dBm on a DPCH channel. Spreading Factor = 32

Data Source

NodeB_RNC_RXI

Source Field

pmDpchCodePowerSf32

Source Section

RadioLinks

pmDpchCodePowerSf32_39

Number of times average transmitted code power 25-25.5 dBm on a DPCH channel. Spreading Factor = 32

Data Source

NodeB_RNC_RXI

Source Field

pmDpchCodePowerSf32

Source Section

RadioLinks

pmDpchCodePowerSf32_40

Number of times average transmitted code power 25.5-26 dBm on a DPCH channel. Spreading Factor = 32

Data Source

NodeB_RNC_RXI

Source Field

pmDpchCodePowerSf32

Source Section

RadioLinks

pmDpchCodePowerSf32_41

Number of times average transmitted code power 26-26.5 dBm on a DPCH channel. Spreading Factor = 32

Data Source

NodeB_RNC_RXI

Source Field

pmDpchCodePowerSf32

Source Section

RadioLinks

pmDpchCodePowerSf32_42

Number of times average transmitted code power 26.5-27 dBm on a DPCH channel. Spreading Factor = 32

© Copyright IBM Corp. 2008, 2009. All Rights Reserved.

Data Source

NodeB_RNC_RXI

Source Field

pmDpchCodePowerSf32

Source Section

RadioLinks

pmDpchCodePowerSf32_43

Number of times average transmitted code power 27-27.5 dBm on a DPCH channel. Spreading Factor = 32

Data Source

NodeB_RNC_RXI

Source Field

pmDpchCodePowerSf32

Source Section

RadioLinks

pmDpchCodePowerSf32_44

Number of times average transmitted code power 27.5-28 dBm on a DPCH channel. Spreading Factor = 32

Data Source

NodeB_RNC_RXI

Source Field

pmDpchCodePowerSf32

Source Section

RadioLinks

pmDpchCodePowerSf32_45

Number of times average transmitted code power 28-28.5 dBm on a DPCH channel. Spreading Factor = 32

Data Source

NodeB_RNC_RXI

Source Field

pmDpchCodePowerSf32

Source Section

RadioLinks

pmDpchCodePowerSf32_46

Number of times average transmitted code power 28.5-29 dBm on a DPCH channel. Spreading Factor = 32

Data Source

NodeB_RNC_RXI

Source Field

pmDpchCodePowerSf32

Source Section

RadioLinks

pmDpchCodePowerSf32_47

Number of times average transmitted code power 29-29.5 dBm on a DPCH channel. Spreading Factor = 32

Data Source

NodeB_RNC_RXI

Source Field

pmDpchCodePowerSf32

Source Section

RadioLinks

pmDpchCodePowerSf32_48

Number of times average transmitted code power 29.5-30 dBm on a DPCH channel. Spreading Factor = 32

© Copyright IBM Corp. 2008, 2009. All Rights Reserved.

Data Source

NodeB_RNC_RXI

Source Field

pmDpchCodePowerSf32

Source Section

RadioLinks

pmDpchCodePowerSf32_49

Number of times average transmitted code power 30-30.5 dBm on a DPCH channel. Spreading Factor = 32

Data Source

NodeB_RNC_RXI

Source Field

pmDpchCodePowerSf32

Source Section

RadioLinks

pmDpchCodePowerSf32_50

Number of times average transmitted code power 30.5-31 dBm on a DPCH channel. Spreading Factor = 32

Data Source

NodeB_RNC_RXI

Source Field

pmDpchCodePowerSf32

Source Section

RadioLinks

pmDpchCodePowerSf32_51

Number of times average transmitted code power 31-31.5 dBm on a DPCH channel. Spreading Factor = 32

Data Source

NodeB_RNC_RXI

Source Field

pmDpchCodePowerSf32

Source Section

RadioLinks

pmDpchCodePowerSf32_52

Number of times average transmitted code power 31.5-32 dBm on a DPCH channel. Spreading Factor = 32

Data Source

NodeB_RNC_RXI

Source Field

pmDpchCodePowerSf32

Source Section

RadioLinks

pmDpchCodePowerSf32_53

Number of times average transmitted code power 32-32.5 dBm on a DPCH channel. Spreading Factor = 32

Data Source

NodeB_RNC_RXI

Source Field

pmDpchCodePowerSf32

Source Section

RadioLinks

pmDpchCodePowerSf32_54

Number of times average transmitted code power 32.5-33 dBm on a DPCH channel. Spreading Factor = 32

© Copyright IBM Corp. 2008, 2009. All Rights Reserved.

Data Source

NodeB_RNC_RXI

Source Field

pmDpchCodePowerSf32

Source Section

RadioLinks

pmDpchCodePowerSf32_55

Number of times average transmitted code power 33-33.5 dBm on a DPCH channel. Spreading Factor = 32

Data Source

NodeB_RNC_RXI

Source Field

pmDpchCodePowerSf32

Source Section

RadioLinks

pmDpchCodePowerSf32_56

Number of times average transmitted code power 33.5-34 dBm on a DPCH channel. Spreading Factor = 32

Data Source

NodeB_RNC_RXI

Source Field

pmDpchCodePowerSf32

Source Section

RadioLinks

pmDpchCodePowerSf32_57

Number of times average transmitted code power 34-34.5 dBm on a DPCH channel. Spreading Factor = 32

Data Source

NodeB_RNC_RXI

Source Field

pmDpchCodePowerSf32

Source Section

RadioLinks

pmDpchCodePowerSf32_58

Number of times average transmitted code power 34.5-35 dBm on a DPCH channel. Spreading Factor = 32

Data Source

NodeB_RNC_RXI

Source Field

pmDpchCodePowerSf32

Source Section

RadioLinks

pmDpchCodePowerSf32_59

Number of times average transmitted code power 35-35.5 dBm on a DPCH channel. Spreading Factor = 32

Data Source

NodeB_RNC_RXI

Source Field

pmDpchCodePowerSf32

Source Section

RadioLinks

pmDpchCodePowerSf32_60

Number of times average transmitted code power 35.5-36 dBm on a DPCH channel. Spreading Factor = 32

© Copyright IBM Corp. 2008, 2009. All Rights Reserved.

Data Source

NodeB_RNC_RXI

Source Field

pmDpchCodePowerSf32

Source Section

RadioLinks

pmDpchCodePowerSf32_61

Number of times average transmitted code power 36-36.5 dBm on a DPCH channel. Spreading Factor = 32

Data Source

NodeB_RNC_RXI

Source Field

pmDpchCodePowerSf32

Source Section

RadioLinks

pmDpchCodePowerSf32_62

Number of times average transmitted code power 36.5-37 dBm on a DPCH channel. Spreading Factor = 32

Data Source

NodeB_RNC_RXI

Source Field

pmDpchCodePowerSf32

Source Section

RadioLinks

pmDpchCodePowerSf32_63

Number of times average transmitted code power 37-37.5 dBm on a DPCH channel. Spreading Factor = 32

Data Source

NodeB_RNC_RXI

Source Field

pmDpchCodePowerSf32

Source Section

RadioLinks

pmDpchCodePowerSf32_64

Number of times average transmitted code power 37.5-38 dBm on a DPCH channel. Spreading Factor = 32

Data Source

NodeB_RNC_RXI

Source Field

pmDpchCodePowerSf32

Source Section

RadioLinks

pmDpchCodePowerSf32_65

Number of times average transmitted code power 38-38.5 dBm on a DPCH channel. Spreading Factor = 32

Data Source

NodeB_RNC_RXI

Source Field

pmDpchCodePowerSf32

Source Section

RadioLinks

pmDpchCodePowerSf32_66

Number of times average transmitted code power 38.5-39 dBm on a DPCH channel. Spreading Factor = 32

© Copyright IBM Corp. 2008, 2009. All Rights Reserved.

Data Source

NodeB_RNC_RXI

Source Field

pmDpchCodePowerSf32

Source Section

RadioLinks

pmDpchCodePowerSf32_67

Number of times average transmitted code power 39-39.5 dBm on a DPCH channel. Spreading Factor = 32

Data Source

NodeB_RNC_RXI

Source Field

pmDpchCodePowerSf32

Source Section

RadioLinks

pmDpchCodePowerSf32_68

Number of times average transmitted code power 39.5-40 dBm on a DPCH channel. Spreading Factor = 32

Data Source

NodeB_RNC_RXI

Source Field

pmDpchCodePowerSf32

Source Section

RadioLinks

pmDpchCodePowerSf32_69

Number of times average transmitted code power 40-40.5 dBm on a DPCH channel. Spreading Factor = 32

Data Source

NodeB_RNC_RXI

Source Field

pmDpchCodePowerSf32

Source Section

RadioLinks

pmDpchCodePowerSf32_70

Number of times average transmitted code power 40.5-41 dBm on a DPCH channel. Spreading Factor = 32

Data Source

NodeB_RNC_RXI

Source Field

pmDpchCodePowerSf32

Source Section

RadioLinks

pmDpchCodePowerSf32_71

Number of times average transmitted code power 41-41.5 dBm on a DPCH channel. Spreading Factor = 32

Data Source

NodeB_RNC_RXI

Source Field

pmDpchCodePowerSf32

Source Section

RadioLinks

pmDpchCodePowerSf32_72

Number of times average transmitted code power 41.5-42 dBm on a DPCH channel. Spreading Factor = 32

© Copyright IBM Corp. 2008, 2009. All Rights Reserved.

Data Source

NodeB_RNC_RXI

Source Field

pmDpchCodePowerSf32

Source Section

RadioLinks

pmDpchCodePowerSf32_73

Number of times average transmitted code power 42-42.5 dBm on a DPCH channel. Spreading Factor = 32

Data Source

NodeB_RNC_RXI

Source Field

pmDpchCodePowerSf32

Source Section

RadioLinks

pmDpchCodePowerSf32_74

Number of times average transmitted code power 42.5-43 dBm on a DPCH channel. Spreading Factor = 32

Data Source

NodeB_RNC_RXI

Source Field

pmDpchCodePowerSf32

Source Section

RadioLinks

pmDpchCodePowerSf4_00

Number of times average transmitted code power 0-6 dBm on a DPCH channel. Spreading Factor = 4

Data Source

NodeB_RNC_RXI

Source Field

pmDpchCodePowerSf4

Source Section

RadioLinks

pmDpchCodePowerSf4_01

Number of times average transmitted code power 6-6.5 dBm on a DPCH channel. Spreading Factor = 4

Data Source

NodeB_RNC_RXI

Source Field

pmDpchCodePowerSf4

Source Section

RadioLinks

pmDpchCodePowerSf4_02

Number of times average transmitted code power 6.5-7 dBm on a DPCH channel. Spreading Factor = 4

Data Source

NodeB_RNC_RXI

Source Field

pmDpchCodePowerSf4

Source Section

RadioLinks

pmDpchCodePowerSf4_03

Number of times average transmitted code power 7-7.5 dBm on a DPCH channel. Spreading Factor = 4

© Copyright IBM Corp. 2008, 2009. All Rights Reserved.

Data Source

NodeB_RNC_RXI

Source Field

pmDpchCodePowerSf4

Source Section

RadioLinks

pmDpchCodePowerSf4_04

Number of times average transmitted code power 7.5-8 dBm on a DPCH channel. Spreading Factor = 4

Data Source

NodeB_RNC_RXI

Source Field

pmDpchCodePowerSf4

Source Section

RadioLinks

pmDpchCodePowerSf4_05

Number of times average transmitted code power 8-8.5 dBm on a DPCH channel. Spreading Factor = 4

Data Source

NodeB_RNC_RXI

Source Field

pmDpchCodePowerSf4

Source Section

RadioLinks

pmDpchCodePowerSf4_06

Number of times average transmitted code power 8.5-9 dBm on a DPCH channel. Spreading Factor = 4

Data Source

NodeB_RNC_RXI

Source Field

pmDpchCodePowerSf4

Source Section

RadioLinks

pmDpchCodePowerSf4_07

Number of times average transmitted code power 9-9.5 dBm on a DPCH channel. Spreading Factor = 4

Data Source

NodeB_RNC_RXI

Source Field

pmDpchCodePowerSf4

Source Section

RadioLinks

pmDpchCodePowerSf4_08

Number of times average transmitted code power 9.5-10 dBm on a DPCH channel. Spreading Factor = 4

Data Source

NodeB_RNC_RXI

Source Field

pmDpchCodePowerSf4

Source Section

RadioLinks

pmDpchCodePowerSf4_09

Number of times average transmitted code power 10-10.5 dBm on a DPCH channel. Spreading Factor = 4

© Copyright IBM Corp. 2008, 2009. All Rights Reserved.

Data Source

NodeB_RNC_RXI

Source Field

pmDpchCodePowerSf4

Source Section

RadioLinks

pmDpchCodePowerSf4_10

Number of times average transmitted code power 10.5-11 dBm on a DPCH channel. Spreading Factor = 4

Data Source

NodeB_RNC_RXI

Source Field

pmDpchCodePowerSf4

Source Section

RadioLinks

pmDpchCodePowerSf4_11

Number of times average transmitted code power 11-11.5 dBm on a DPCH channel. Spreading Factor = 4

Data Source

NodeB_RNC_RXI

Source Field

pmDpchCodePowerSf4

Source Section

RadioLinks

pmDpchCodePowerSf4_12

Number of times average transmitted code power 11.5-12 dBm on a DPCH channel. Spreading Factor = 4

Data Source

NodeB_RNC_RXI

Source Field

pmDpchCodePowerSf4

Source Section

RadioLinks

pmDpchCodePowerSf4_13

Number of times average transmitted code power 12-12.5 dBm on a DPCH channel. Spreading Factor = 4

Data Source

NodeB_RNC_RXI

Source Field

pmDpchCodePowerSf4

Source Section

RadioLinks

pmDpchCodePowerSf4_14

Number of times average transmitted code power 12.5-13 dBm on a DPCH channel. Spreading Factor = 4

Data Source

NodeB_RNC_RXI

Source Field

pmDpchCodePowerSf4

Source Section

RadioLinks

pmDpchCodePowerSf4_15

Number of times average transmitted code power 13-13.5 dBm on a DPCH channel. Spreading Factor = 4

© Copyright IBM Corp. 2008, 2009. All Rights Reserved.

Data Source

NodeB_RNC_RXI

Source Field

pmDpchCodePowerSf4

Source Section

RadioLinks

pmDpchCodePowerSf4_16

Number of times average transmitted code power 13.5-14 dBm on a DPCH channel. Spreading Factor = 4

Data Source

NodeB_RNC_RXI

Source Field

pmDpchCodePowerSf4

Source Section

RadioLinks

pmDpchCodePowerSf4_17

Number of times average transmitted code power 14-14.5 dBm on a DPCH channel. Spreading Factor = 4

Data Source

NodeB_RNC_RXI

Source Field

pmDpchCodePowerSf4

Source Section

RadioLinks

pmDpchCodePowerSf4_18

Number of times average transmitted code power 14.5-15 dBm on a DPCH channel. Spreading Factor = 4

Data Source

NodeB_RNC_RXI

Source Field

pmDpchCodePowerSf4

Source Section

RadioLinks

pmDpchCodePowerSf4_19

Number of times average transmitted code power 15-15.5 dBm on a DPCH channel. Spreading Factor = 4

Data Source

NodeB_RNC_RXI

Source Field

pmDpchCodePowerSf4

Source Section

RadioLinks

pmDpchCodePowerSf4_20

Number of times average transmitted code power 15.5-16 dBm on a DPCH channel. Spreading Factor = 4

Data Source

NodeB_RNC_RXI

Source Field

pmDpchCodePowerSf4

Source Section

RadioLinks

pmDpchCodePowerSf4_21

Number of times average transmitted code power 16-16.5 dBm on a DPCH channel. Spreading Factor = 4

© Copyright IBM Corp. 2008, 2009. All Rights Reserved.

Data Source

NodeB_RNC_RXI

Source Field

pmDpchCodePowerSf4

Source Section

RadioLinks

pmDpchCodePowerSf4_22

Number of times average transmitted code power 16.5-17 dBm on a DPCH channel. Spreading Factor = 4

Data Source

NodeB_RNC_RXI

Source Field

pmDpchCodePowerSf4

Source Section

RadioLinks

pmDpchCodePowerSf4_23

Number of times average transmitted code power 17-17.5 dBm on a DPCH channel. Spreading Factor = 4

Data Source

NodeB_RNC_RXI

Source Field

pmDpchCodePowerSf4

Source Section

RadioLinks

pmDpchCodePowerSf4_24

Number of times average transmitted code power 17.5-18 dBm on a DPCH channel. Spreading Factor = 4

Data Source

NodeB_RNC_RXI

Source Field

pmDpchCodePowerSf4

Source Section

RadioLinks

pmDpchCodePowerSf4_25

Number of times average transmitted code power 18-18.5 dBm on a DPCH channel. Spreading Factor = 4

Data Source

NodeB_RNC_RXI

Source Field

pmDpchCodePowerSf4

Source Section

RadioLinks

pmDpchCodePowerSf4_26

Number of times average transmitted code power 18.5-19 dBm on a DPCH channel. Spreading Factor = 4

Data Source

NodeB_RNC_RXI

Source Field

pmDpchCodePowerSf4

Source Section

RadioLinks

pmDpchCodePowerSf4_27

Number of times average transmitted code power 19-19.5 dBm on a DPCH channel. Spreading Factor = 4

© Copyright IBM Corp. 2008, 2009. All Rights Reserved.

Data Source

NodeB_RNC_RXI

Source Field

pmDpchCodePowerSf4

Source Section

RadioLinks

pmDpchCodePowerSf4_28

Number of times average transmitted code power 19.5-20 dBm on a DPCH channel. Spreading Factor = 4

Data Source

NodeB_RNC_RXI

Source Field

pmDpchCodePowerSf4

Source Section

RadioLinks

pmDpchCodePowerSf4_29

Number of times average transmitted code power 20-20.5 dBm on a DPCH channel. Spreading Factor = 4

Data Source

NodeB_RNC_RXI

Source Field

pmDpchCodePowerSf4

Source Section

RadioLinks

pmDpchCodePowerSf4_30

Number of times average transmitted code power 20.5-21 dBm on a DPCH channel. Spreading Factor = 4

Data Source

NodeB_RNC_RXI

Source Field

pmDpchCodePowerSf4

Source Section

RadioLinks

pmDpchCodePowerSf4_31

Number of times average transmitted code power 21-21.5 dBm on a DPCH channel. Spreading Factor = 4

Data Source

NodeB_RNC_RXI

Source Field

pmDpchCodePowerSf4

Source Section

RadioLinks

pmDpchCodePowerSf4_32

Number of times average transmitted code power 21.5-22 dBm on a DPCH channel. Spreading Factor = 4

Data Source

NodeB_RNC_RXI

Source Field

pmDpchCodePowerSf4

Source Section

RadioLinks

pmDpchCodePowerSf4_33

Number of times average transmitted code power 22-22.5 dBm on a DPCH channel. Spreading Factor = 4

© Copyright IBM Corp. 2008, 2009. All Rights Reserved.

Data Source

NodeB_RNC_RXI

Source Field

pmDpchCodePowerSf4

Source Section

RadioLinks

pmDpchCodePowerSf4_34

Number of times average transmitted code power 22.5-23 dBm on a DPCH channel. Spreading Factor = 4

Data Source

NodeB_RNC_RXI

Source Field

pmDpchCodePowerSf4

Source Section

RadioLinks

pmDpchCodePowerSf4_35

Number of times average transmitted code power 23-23.5 dBm on a DPCH channel. Spreading Factor = 4

Data Source

NodeB_RNC_RXI

Source Field

pmDpchCodePowerSf4

Source Section

RadioLinks

pmDpchCodePowerSf4_36

Number of times average transmitted code power 23.5-24 dBm on a DPCH channel. Spreading Factor = 4

Data Source

NodeB_RNC_RXI

Source Field

pmDpchCodePowerSf4

Source Section

RadioLinks

pmDpchCodePowerSf4_37

Number of times average transmitted code power 24-24.5 dBm on a DPCH channel. Spreading Factor = 4

Data Source

NodeB_RNC_RXI

Source Field

pmDpchCodePowerSf4

Source Section

RadioLinks

pmDpchCodePowerSf4_38

Number of times average transmitted code power 24.5-25 dBm on a DPCH channel. Spreading Factor = 4

Data Source

NodeB_RNC_RXI

Source Field

pmDpchCodePowerSf4

Source Section

RadioLinks

pmDpchCodePowerSf4_39

Number of times average transmitted code power 25-25.5 dBm on a DPCH channel. Spreading Factor = 4

© Copyright IBM Corp. 2008, 2009. All Rights Reserved.

Data Source

NodeB_RNC_RXI

Source Field

pmDpchCodePowerSf4

Source Section

RadioLinks

pmDpchCodePowerSf4_40

Number of times average transmitted code power 25.5-26 dBm on a DPCH channel. Spreading Factor = 4

Data Source

NodeB_RNC_RXI

Source Field

pmDpchCodePowerSf4

Source Section

RadioLinks

pmDpchCodePowerSf4_41

Number of times average transmitted code power 26-26.5 dBm on a DPCH channel. Spreading Factor = 4

Data Source

NodeB_RNC_RXI

Source Field

pmDpchCodePowerSf4

Source Section

RadioLinks

pmDpchCodePowerSf4_42

Number of times average transmitted code power 26.5-27 dBm on a DPCH channel. Spreading Factor = 4

Data Source

NodeB_RNC_RXI

Source Field

pmDpchCodePowerSf4

Source Section

RadioLinks

pmDpchCodePowerSf4_43

Number of times average transmitted code power 27-27.5 dBm on a DPCH channel. Spreading Factor = 4

Data Source

NodeB_RNC_RXI

Source Field

pmDpchCodePowerSf4

Source Section

RadioLinks

pmDpchCodePowerSf4_44

Number of times average transmitted code power 27.5-28 dBm on a DPCH channel. Spreading Factor = 4

Data Source

NodeB_RNC_RXI

Source Field

pmDpchCodePowerSf4

Source Section

RadioLinks

pmDpchCodePowerSf4_45

Number of times average transmitted code power 28-28.5 dBm on a DPCH channel. Spreading Factor = 4

© Copyright IBM Corp. 2008, 2009. All Rights Reserved.

Data Source

NodeB_RNC_RXI

Source Field

pmDpchCodePowerSf4

Source Section

RadioLinks

pmDpchCodePowerSf4_46

Number of times average transmitted code power 28.5-29 dBm on a DPCH channel. Spreading Factor = 4

Data Source

NodeB_RNC_RXI

Source Field

pmDpchCodePowerSf4

Source Section

RadioLinks

pmDpchCodePowerSf4_47

Number of times average transmitted code power 29-29.5 dBm on a DPCH channel. Spreading Factor = 4

Data Source

NodeB_RNC_RXI

Source Field

pmDpchCodePowerSf4

Source Section

RadioLinks

pmDpchCodePowerSf4_48

Number of times average transmitted code power 29.5-30 dBm on a DPCH channel. Spreading Factor = 4

Data Source

NodeB_RNC_RXI

Source Field

pmDpchCodePowerSf4

Source Section

RadioLinks

pmDpchCodePowerSf4_49

Number of times average transmitted code power 30-30.5 dBm on a DPCH channel. Spreading Factor = 4

Data Source

NodeB_RNC_RXI

Source Field

pmDpchCodePowerSf4

Source Section

RadioLinks

pmDpchCodePowerSf4_50

Number of times average transmitted code power 30.5-31 dBm on a DPCH channel. Spreading Factor = 4

Data Source

NodeB_RNC_RXI

Source Field

pmDpchCodePowerSf4

Source Section

RadioLinks

pmDpchCodePowerSf4_51

Number of times average transmitted code power 31-31.5 dBm on a DPCH channel. Spreading Factor = 4

© Copyright IBM Corp. 2008, 2009. All Rights Reserved.

Data Source

NodeB_RNC_RXI

Source Field

pmDpchCodePowerSf4

Source Section

RadioLinks

pmDpchCodePowerSf4_52

Number of times average transmitted code power 31.5-32 dBm on a DPCH channel. Spreading Factor = 4

Data Source

NodeB_RNC_RXI

Source Field

pmDpchCodePowerSf4

Source Section

RadioLinks

pmDpchCodePowerSf4_53

Number of times average transmitted code power 32-32.5 dBm on a DPCH channel. Spreading Factor = 4

Data Source

NodeB_RNC_RXI

Source Field

pmDpchCodePowerSf4

Source Section

RadioLinks

pmDpchCodePowerSf4_54

Number of times average transmitted code power 32.5-33 dBm on a DPCH channel. Spreading Factor = 4

Data Source

NodeB_RNC_RXI

Source Field

pmDpchCodePowerSf4

Source Section

RadioLinks

pmDpchCodePowerSf4_55

Number of times average transmitted code power 33-33.5 dBm on a DPCH channel. Spreading Factor = 4

Data Source

NodeB_RNC_RXI

Source Field

pmDpchCodePowerSf4

Source Section

RadioLinks

pmDpchCodePowerSf4_56

Number of times average transmitted code power 33.5-34 dBm on a DPCH channel. Spreading Factor = 4

Data Source

NodeB_RNC_RXI

Source Field

pmDpchCodePowerSf4

Source Section

RadioLinks

pmDpchCodePowerSf4_57

Number of times average transmitted code power 34-34.5 dBm on a DPCH channel. Spreading Factor = 4

© Copyright IBM Corp. 2008, 2009. All Rights Reserved.

Data Source

NodeB_RNC_RXI

Source Field

pmDpchCodePowerSf4

Source Section

RadioLinks

pmDpchCodePowerSf4_58

Number of times average transmitted code power 34.5-35 dBm on a DPCH channel. Spreading Factor = 4

Data Source

NodeB_RNC_RXI

Source Field

pmDpchCodePowerSf4

Source Section

RadioLinks

pmDpchCodePowerSf4_59

Number of times average transmitted code power 35-35.5 dBm on a DPCH channel. Spreading Factor = 4

Data Source

NodeB_RNC_RXI

Source Field

pmDpchCodePowerSf4

Source Section

RadioLinks

pmDpchCodePowerSf4_60

Number of times average transmitted code power 35.5-36 dBm on a DPCH channel. Spreading Factor = 4

Data Source

NodeB_RNC_RXI

Source Field

pmDpchCodePowerSf4

Source Section

RadioLinks

pmDpchCodePowerSf4_61

Number of times average transmitted code power 36-36.5 dBm on a DPCH channel. Spreading Factor = 4

Data Source

NodeB_RNC_RXI

Source Field

pmDpchCodePowerSf4

Source Section

RadioLinks

pmDpchCodePowerSf4_62

Number of times average transmitted code power 36.5-37 dBm on a DPCH channel. Spreading Factor = 4

Data Source

NodeB_RNC_RXI

Source Field

pmDpchCodePowerSf4

Source Section

RadioLinks

pmDpchCodePowerSf4_63

Number of times average transmitted code power 37-37.5 dBm on a DPCH channel. Spreading Factor = 4

© Copyright IBM Corp. 2008, 2009. All Rights Reserved.

Data Source

NodeB_RNC_RXI

Source Field

pmDpchCodePowerSf4

Source Section

RadioLinks

pmDpchCodePowerSf4_64

Number of times average transmitted code power 37.5-38 dBm on a DPCH channel. Spreading Factor = 4

Data Source

NodeB_RNC_RXI

Source Field

pmDpchCodePowerSf4

Source Section

RadioLinks

pmDpchCodePowerSf4_65

Number of times average transmitted code power 38-38.5 dBm on a DPCH channel. Spreading Factor = 4

Data Source

NodeB_RNC_RXI

Source Field

pmDpchCodePowerSf4

Source Section

RadioLinks

pmDpchCodePowerSf4_66

Number of times average transmitted code power 38.5-39 dBm on a DPCH channel. Spreading Factor = 4

Data Source

NodeB_RNC_RXI

Source Field

pmDpchCodePowerSf4

Source Section

RadioLinks

pmDpchCodePowerSf4_67

Number of times average transmitted code power 39-39.5 dBm on a DPCH channel. Spreading Factor = 4

Data Source

NodeB_RNC_RXI

Source Field

pmDpchCodePowerSf4

Source Section

RadioLinks

pmDpchCodePowerSf4_68

Number of times average transmitted code power 39.5-40 dBm on a DPCH channel. Spreading Factor = 4

Data Source

NodeB_RNC_RXI

Source Field

pmDpchCodePowerSf4

Source Section

RadioLinks

pmDpchCodePowerSf4_69

Number of times average transmitted code power 40-40.5 dBm on a DPCH channel. Spreading Factor = 4

© Copyright IBM Corp. 2008, 2009. All Rights Reserved.

Data Source

NodeB_RNC_RXI

Source Field

pmDpchCodePowerSf4

Source Section

RadioLinks

pmDpchCodePowerSf4_70

Number of times average transmitted code power 40.5-41 dBm on a DPCH channel. Spreading Factor = 4

Data Source

NodeB_RNC_RXI

Source Field

pmDpchCodePowerSf4

Source Section

RadioLinks

pmDpchCodePowerSf4_71

Number of times average transmitted code power 41-41.5 dBm on a DPCH channel. Spreading Factor = 4

Data Source

NodeB_RNC_RXI

Source Field

pmDpchCodePowerSf4

Source Section

RadioLinks

pmDpchCodePowerSf4_72

Number of times average transmitted code power 41.5-42 dBm on a DPCH channel. Spreading Factor = 4

Data Source

NodeB_RNC_RXI

Source Field

pmDpchCodePowerSf4

Source Section

RadioLinks

pmDpchCodePowerSf4_73

Number of times average transmitted code power 42-42.5 dBm on a DPCH channel. Spreading Factor = 4

Data Source

NodeB_RNC_RXI

Source Field

pmDpchCodePowerSf4

Source Section

RadioLinks

pmDpchCodePowerSf4_74

Number of times average transmitted code power 42.5-43 dBm on a DPCH channel. Spreading Factor = 4

Data Source

NodeB_RNC_RXI

Source Field

pmDpchCodePowerSf4

Source Section

RadioLinks

pmDpchCodePowerSf64_00

Number of times average transmitted code power 0-6 dBm on a DPCH channel. Spreading Factor = 64

© Copyright IBM Corp. 2008, 2009. All Rights Reserved.

Data Source

NodeB_RNC_RXI

Source Field

pmDpchCodePowerSf64

Source Section

RadioLinks

pmDpchCodePowerSf64_01

Number of times average transmitted code power 6-6.5 dBm on a DPCH channel. Spreading Factor = 64

Data Source

NodeB_RNC_RXI

Source Field

pmDpchCodePowerSf64

Source Section

RadioLinks

pmDpchCodePowerSf64_02

Number of times average transmitted code power 6.5-7 dBm on a DPCH channel. Spreading Factor = 64

Data Source

NodeB_RNC_RXI

Source Field

pmDpchCodePowerSf64

Source Section

RadioLinks

pmDpchCodePowerSf64_03

Number of times average transmitted code power 7-7.5 dBm on a DPCH channel. Spreading Factor = 64

Data Source

NodeB_RNC_RXI

Source Field

pmDpchCodePowerSf64

Source Section

RadioLinks

pmDpchCodePowerSf64_04

Number of times average transmitted code power 7.5-8 dBm on a DPCH channel. Spreading Factor = 64

Data Source

NodeB_RNC_RXI

Source Field

pmDpchCodePowerSf64

Source Section

RadioLinks

pmDpchCodePowerSf64_05

Number of times average transmitted code power 8-8.5 dBm on a DPCH channel. Spreading Factor = 64

Data Source

NodeB_RNC_RXI

Source Field

pmDpchCodePowerSf64

Source Section

RadioLinks

pmDpchCodePowerSf64_06

Number of times average transmitted code power 8.5-9 dBm on a DPCH channel. Spreading Factor = 64

© Copyright IBM Corp. 2008, 2009. All Rights Reserved.

Data Source

NodeB_RNC_RXI

Source Field

pmDpchCodePowerSf64

Source Section

RadioLinks

pmDpchCodePowerSf64_07

Number of times average transmitted code power 9-9.5 dBm on a DPCH channel. Spreading Factor = 64

Data Source

NodeB_RNC_RXI

Source Field

pmDpchCodePowerSf64

Source Section

RadioLinks

pmDpchCodePowerSf64_08

Number of times average transmitted code power 9.5-10 dBm on a DPCH channel. Spreading Factor = 64

Data Source

NodeB_RNC_RXI

Source Field

pmDpchCodePowerSf64

Source Section

RadioLinks

pmDpchCodePowerSf64_09

Number of times average transmitted code power 10-10.5 dBm on a DPCH channel. Spreading Factor = 64

Data Source

NodeB_RNC_RXI

Source Field

pmDpchCodePowerSf64

Source Section

RadioLinks

pmDpchCodePowerSf64_10

Number of times average transmitted code power 10.5-11 dBm on a DPCH channel. Spreading Factor = 64

Data Source

NodeB_RNC_RXI

Source Field

pmDpchCodePowerSf64

Source Section

RadioLinks

pmDpchCodePowerSf64_11

Number of times average transmitted code power 11-11.5 dBm on a DPCH channel. Spreading Factor = 64

Data Source

NodeB_RNC_RXI

Source Field

pmDpchCodePowerSf64

Source Section

RadioLinks

pmDpchCodePowerSf64_12

Number of times average transmitted code power 11.5-12 dBm on a DPCH channel. Spreading Factor = 64

© Copyright IBM Corp. 2008, 2009. All Rights Reserved.

Data Source

NodeB_RNC_RXI

Source Field

pmDpchCodePowerSf64

Source Section

RadioLinks

pmDpchCodePowerSf64_13

Number of times average transmitted code power 12-12.5 dBm on a DPCH channel. Spreading Factor = 64

Data Source

NodeB_RNC_RXI

Source Field

pmDpchCodePowerSf64

Source Section

RadioLinks

pmDpchCodePowerSf64_14

Number of times average transmitted code power 12.5-13 dBm on a DPCH channel. Spreading Factor = 64

Data Source

NodeB_RNC_RXI

Source Field

pmDpchCodePowerSf64

Source Section

RadioLinks

pmDpchCodePowerSf64_15

Number of times average transmitted code power 13-13.5 dBm on a DPCH channel. Spreading Factor = 64

Data Source

NodeB_RNC_RXI

Source Field

pmDpchCodePowerSf64

Source Section

RadioLinks

pmDpchCodePowerSf64_16

Number of times average transmitted code power 13.5-14 dBm on a DPCH channel. Spreading Factor = 64

Data Source

NodeB_RNC_RXI

Source Field

pmDpchCodePowerSf64

Source Section

RadioLinks

pmDpchCodePowerSf64_17

Number of times average transmitted code power 14-14.5 dBm on a DPCH channel. Spreading Factor = 64

Data Source

NodeB_RNC_RXI

Source Field

pmDpchCodePowerSf64

Source Section

RadioLinks

pmDpchCodePowerSf64_18

Number of times average transmitted code power 14.5-15 dBm on a DPCH channel. Spreading Factor = 64

© Copyright IBM Corp. 2008, 2009. All Rights Reserved.

Data Source

NodeB_RNC_RXI

Source Field

pmDpchCodePowerSf64

Source Section

RadioLinks

pmDpchCodePowerSf64_19

Number of times average transmitted code power 15-15.5 dBm on a DPCH channel. Spreading Factor = 64

Data Source

NodeB_RNC_RXI

Source Field

pmDpchCodePowerSf64

Source Section

RadioLinks

pmDpchCodePowerSf64_20

Number of times average transmitted code power 15.5-16 dBm on a DPCH channel. Spreading Factor = 64

Data Source

NodeB_RNC_RXI

Source Field

pmDpchCodePowerSf64

Source Section

RadioLinks

pmDpchCodePowerSf64_21

Number of times average transmitted code power 16-16.5 dBm on a DPCH channel. Spreading Factor = 64

Data Source

NodeB_RNC_RXI

Source Field

pmDpchCodePowerSf64

Source Section

RadioLinks

pmDpchCodePowerSf64_22

Number of times average transmitted code power 16.5-17 dBm on a DPCH channel. Spreading Factor = 64

Data Source

NodeB_RNC_RXI

Source Field

pmDpchCodePowerSf64

Source Section

RadioLinks

pmDpchCodePowerSf64_23

Number of times average transmitted code power 17-17.5 dBm on a DPCH channel. Spreading Factor = 64

Data Source

NodeB_RNC_RXI

Source Field

pmDpchCodePowerSf64

Source Section

RadioLinks

pmDpchCodePowerSf64_24

Number of times average transmitted code power 17.5-18 dBm on a DPCH channel. Spreading Factor = 64

© Copyright IBM Corp. 2008, 2009. All Rights Reserved.

Data Source

NodeB_RNC_RXI

Source Field

pmDpchCodePowerSf64

Source Section

RadioLinks

pmDpchCodePowerSf64_25

Number of times average transmitted code power 18-18.5 dBm on a DPCH channel. Spreading Factor = 64

Data Source

NodeB_RNC_RXI

Source Field

pmDpchCodePowerSf64

Source Section

RadioLinks

pmDpchCodePowerSf64_26

Number of times average transmitted code power 18.5-19 dBm on a DPCH channel. Spreading Factor = 64

Data Source

NodeB_RNC_RXI

Source Field

pmDpchCodePowerSf64

Source Section

RadioLinks

pmDpchCodePowerSf64_27

Number of times average transmitted code power 19-19.5 dBm on a DPCH channel. Spreading Factor = 64

Data Source

NodeB_RNC_RXI

Source Field

pmDpchCodePowerSf64

Source Section

RadioLinks

pmDpchCodePowerSf64_28

Number of times average transmitted code power 19.5-20 dBm on a DPCH channel. Spreading Factor = 64

Data Source

NodeB_RNC_RXI

Source Field

pmDpchCodePowerSf64

Source Section

RadioLinks

pmDpchCodePowerSf64_29

Number of times average transmitted code power 20-20.5 dBm on a DPCH channel. Spreading Factor = 64

Data Source

NodeB_RNC_RXI

Source Field

pmDpchCodePowerSf64

Source Section

RadioLinks

pmDpchCodePowerSf64_30

Number of times average transmitted code power 20.5-21 dBm on a DPCH channel. Spreading Factor = 64

© Copyright IBM Corp. 2008, 2009. All Rights Reserved.

Data Source

NodeB_RNC_RXI

Source Field

pmDpchCodePowerSf64

Source Section

RadioLinks

pmDpchCodePowerSf64_31

Number of times average transmitted code power 21-21.5 dBm on a DPCH channel. Spreading Factor = 64

Data Source

NodeB_RNC_RXI

Source Field

pmDpchCodePowerSf64

Source Section

RadioLinks

pmDpchCodePowerSf64_32

Number of times average transmitted code power 21.5-22 dBm on a DPCH channel. Spreading Factor = 64

Data Source

NodeB_RNC_RXI

Source Field

pmDpchCodePowerSf64

Source Section

RadioLinks

pmDpchCodePowerSf64_33

Number of times average transmitted code power 22-22.5 dBm on a DPCH channel. Spreading Factor = 64

Data Source

NodeB_RNC_RXI

Source Field

pmDpchCodePowerSf64

Source Section

RadioLinks

pmDpchCodePowerSf64_34

Number of times average transmitted code power 22.5-23 dBm on a DPCH channel. Spreading Factor = 64

Data Source

NodeB_RNC_RXI

Source Field

pmDpchCodePowerSf64

Source Section

RadioLinks

pmDpchCodePowerSf64_35

Number of times average transmitted code power 23-23.5 dBm on a DPCH channel. Spreading Factor = 64

Data Source

NodeB_RNC_RXI

Source Field

pmDpchCodePowerSf64

Source Section

RadioLinks

pmDpchCodePowerSf64_36

Number of times average transmitted code power 23.5-24 dBm on a DPCH channel. Spreading Factor = 64

© Copyright IBM Corp. 2008, 2009. All Rights Reserved.

Data Source

NodeB_RNC_RXI

Source Field

pmDpchCodePowerSf64

Source Section

RadioLinks

pmDpchCodePowerSf64_37

Number of times average transmitted code power 24-24.5 dBm on a DPCH channel. Spreading Factor = 64

Data Source

NodeB_RNC_RXI

Source Field

pmDpchCodePowerSf64

Source Section

RadioLinks

pmDpchCodePowerSf64_38

Number of times average transmitted code power 24.5-25 dBm on a DPCH channel. Spreading Factor = 64

Data Source

NodeB_RNC_RXI

Source Field

pmDpchCodePowerSf64

Source Section

RadioLinks

pmDpchCodePowerSf64_39

Number of times average transmitted code power 25-25.5 dBm on a DPCH channel. Spreading Factor = 64

Data Source

NodeB_RNC_RXI

Source Field

pmDpchCodePowerSf64

Source Section

RadioLinks

pmDpchCodePowerSf64_40

Number of times average transmitted code power 25.5-26 dBm on a DPCH channel. Spreading Factor = 64

Data Source

NodeB_RNC_RXI

Source Field

pmDpchCodePowerSf64

Source Section

RadioLinks

pmDpchCodePowerSf64_41

Number of times average transmitted code power 26-26.5 dBm on a DPCH channel. Spreading Factor = 64

Data Source

NodeB_RNC_RXI

Source Field

pmDpchCodePowerSf64

Source Section

RadioLinks

pmDpchCodePowerSf64_42

Number of times average transmitted code power 26.5-27 dBm on a DPCH channel. Spreading Factor = 64

© Copyright IBM Corp. 2008, 2009. All Rights Reserved.

Data Source

NodeB_RNC_RXI

Source Field

pmDpchCodePowerSf64

Source Section

RadioLinks

pmDpchCodePowerSf64_43

Number of times average transmitted code power 27-27.5 dBm on a DPCH channel. Spreading Factor = 64

Data Source

NodeB_RNC_RXI

Source Field

pmDpchCodePowerSf64

Source Section

RadioLinks

pmDpchCodePowerSf64_44

Number of times average transmitted code power 27.5-28 dBm on a DPCH channel. Spreading Factor = 64

Data Source

NodeB_RNC_RXI

Source Field

pmDpchCodePowerSf64

Source Section

RadioLinks

pmDpchCodePowerSf64_45

Number of times average transmitted code power 28-28.5 dBm on a DPCH channel. Spreading Factor = 64

Data Source

NodeB_RNC_RXI

Source Field

pmDpchCodePowerSf64

Source Section

RadioLinks

pmDpchCodePowerSf64_46

Number of times average transmitted code power 28.5-29 dBm on a DPCH channel. Spreading Factor = 64

Data Source

NodeB_RNC_RXI

Source Field

pmDpchCodePowerSf64

Source Section

RadioLinks

pmDpchCodePowerSf64_47

Number of times average transmitted code power 29-29.5 dBm on a DPCH channel. Spreading Factor = 64

Data Source

NodeB_RNC_RXI

Source Field

pmDpchCodePowerSf64

Source Section

RadioLinks

pmDpchCodePowerSf64_48

Number of times average transmitted code power 29.5-30 dBm on a DPCH channel. Spreading Factor = 64

© Copyright IBM Corp. 2008, 2009. All Rights Reserved.

Data Source

NodeB_RNC_RXI

Source Field

pmDpchCodePowerSf64

Source Section

RadioLinks

pmDpchCodePowerSf64_49

Number of times average transmitted code power 30-30.5 dBm on a DPCH channel. Spreading Factor = 64

Data Source

NodeB_RNC_RXI

Source Field

pmDpchCodePowerSf64

Source Section

RadioLinks

pmDpchCodePowerSf64_50

Number of times average transmitted code power 30.5-31 dBm on a DPCH channel. Spreading Factor = 64

Data Source

NodeB_RNC_RXI

Source Field

pmDpchCodePowerSf64

Source Section

RadioLinks

pmDpchCodePowerSf64_51

Number of times average transmitted code power 31-31.5 dBm on a DPCH channel. Spreading Factor = 64

Data Source

NodeB_RNC_RXI

Source Field

pmDpchCodePowerSf64

Source Section

RadioLinks

pmDpchCodePowerSf64_52

Number of times average transmitted code power 31.5-32 dBm on a DPCH channel. Spreading Factor = 64

Data Source

NodeB_RNC_RXI

Source Field

pmDpchCodePowerSf64

Source Section

RadioLinks

pmDpchCodePowerSf64_53

Number of times average transmitted code power 32-32.5 dBm on a DPCH channel. Spreading Factor = 64

Data Source

NodeB_RNC_RXI

Source Field

pmDpchCodePowerSf64

Source Section

RadioLinks

pmDpchCodePowerSf64_54

Number of times average transmitted code power 32.5-33 dBm on a DPCH channel. Spreading Factor = 64

© Copyright IBM Corp. 2008, 2009. All Rights Reserved.

Data Source

NodeB_RNC_RXI

Source Field

pmDpchCodePowerSf64

Source Section

RadioLinks

pmDpchCodePowerSf64_55

Number of times average transmitted code power 33-33.5 dBm on a DPCH channel. Spreading Factor = 64

Data Source

NodeB_RNC_RXI

Source Field

pmDpchCodePowerSf64

Source Section

RadioLinks

pmDpchCodePowerSf64_56

Number of times average transmitted code power 33.5-34 dBm on a DPCH channel. Spreading Factor = 64

Data Source

NodeB_RNC_RXI

Source Field

pmDpchCodePowerSf64

Source Section

RadioLinks

pmDpchCodePowerSf64_57

Number of times average transmitted code power 34-34.5 dBm on a DPCH channel. Spreading Factor = 64

Data Source

NodeB_RNC_RXI

Source Field

pmDpchCodePowerSf64

Source Section

RadioLinks

pmDpchCodePowerSf64_58

Number of times average transmitted code power 34.5-35 dBm on a DPCH channel. Spreading Factor = 64

Data Source

NodeB_RNC_RXI

Source Field

pmDpchCodePowerSf64

Source Section

RadioLinks

pmDpchCodePowerSf64_59

Number of times average transmitted code power 35-35.5 dBm on a DPCH channel. Spreading Factor = 64

Data Source

NodeB_RNC_RXI

Source Field

pmDpchCodePowerSf64

Source Section

RadioLinks

pmDpchCodePowerSf64_60

Number of times average transmitted code power 35.5-36 dBm on a DPCH channel. Spreading Factor = 64

© Copyright IBM Corp. 2008, 2009. All Rights Reserved.

Data Source

NodeB_RNC_RXI

Source Field

pmDpchCodePowerSf64

Source Section

RadioLinks

pmDpchCodePowerSf64_61

Number of times average transmitted code power 36-36.5 dBm on a DPCH channel. Spreading Factor = 64

Data Source

NodeB_RNC_RXI

Source Field

pmDpchCodePowerSf64

Source Section

RadioLinks

pmDpchCodePowerSf64_62

Number of times average transmitted code power 36.5-37 dBm on a DPCH channel. Spreading Factor = 64

Data Source

NodeB_RNC_RXI

Source Field

pmDpchCodePowerSf64

Source Section

RadioLinks

pmDpchCodePowerSf64_63

Number of times average transmitted code power 37-37.5 dBm on a DPCH channel. Spreading Factor = 64

Data Source

NodeB_RNC_RXI

Source Field

pmDpchCodePowerSf64

Source Section

RadioLinks

pmDpchCodePowerSf64_64

Number of times average transmitted code power 37.5-38 dBm on a DPCH channel. Spreading Factor = 64

Data Source

NodeB_RNC_RXI

Source Field

pmDpchCodePowerSf64

Source Section

RadioLinks

pmDpchCodePowerSf64_65

Number of times average transmitted code power 38-38.5 dBm on a DPCH channel. Spreading Factor = 64

Data Source

NodeB_RNC_RXI

Source Field

pmDpchCodePowerSf64

Source Section

RadioLinks

pmDpchCodePowerSf64_66

Number of times average transmitted code power 38.5-39 dBm on a DPCH channel. Spreading Factor = 64

© Copyright IBM Corp. 2008, 2009. All Rights Reserved.

Data Source

NodeB_RNC_RXI

Source Field

pmDpchCodePowerSf64

Source Section

RadioLinks

pmDpchCodePowerSf64_67

Number of times average transmitted code power 39-39.5 dBm on a DPCH channel. Spreading Factor = 64

Data Source

NodeB_RNC_RXI

Source Field

pmDpchCodePowerSf64

Source Section

RadioLinks

pmDpchCodePowerSf64_68

Number of times average transmitted code power 39.5-40 dBm on a DPCH channel. Spreading Factor = 64

Data Source

NodeB_RNC_RXI

Source Field

pmDpchCodePowerSf64

Source Section

RadioLinks

pmDpchCodePowerSf64_69

Number of times average transmitted code power 40-40.5 dBm on a DPCH channel. Spreading Factor = 64

Data Source

NodeB_RNC_RXI

Source Field

pmDpchCodePowerSf64

Source Section

RadioLinks

pmDpchCodePowerSf64_70

Number of times average transmitted code power 40.5-41 dBm on a DPCH channel. Spreading Factor = 64

Data Source

NodeB_RNC_RXI

Source Field

pmDpchCodePowerSf64

Source Section

RadioLinks

pmDpchCodePowerSf64_71

Number of times average transmitted code power 41-41.5 dBm on a DPCH channel. Spreading Factor = 64

Data Source

NodeB_RNC_RXI

Source Field

pmDpchCodePowerSf64

Source Section

RadioLinks

pmDpchCodePowerSf64_72

Number of times average transmitted code power 41.5-42 dBm on a DPCH channel. Spreading Factor = 64

© Copyright IBM Corp. 2008, 2009. All Rights Reserved.

Data Source

NodeB_RNC_RXI

Source Field

pmDpchCodePowerSf64

Source Section

RadioLinks

pmDpchCodePowerSf64_73

Number of times average transmitted code power 42-42.5 dBm on a DPCH channel. Spreading Factor = 64

Data Source

NodeB_RNC_RXI

Source Field

pmDpchCodePowerSf64

Source Section

RadioLinks

pmDpchCodePowerSf64_74

Number of times average transmitted code power 42.5-43 dBm on a DPCH channel. Spreading Factor = 64

Data Source

NodeB_RNC_RXI

Source Field

pmDpchCodePowerSf64

Source Section

RadioLinks

pmDpchCodePowerSf8_00

Number of times average transmitted code power 0-6 dBm on a DPCH channel. Spreading Factor = 8

Data Source

NodeB_RNC_RXI

Source Field

pmDpchCodePowerSf8

Source Section

RadioLinks

pmDpchCodePowerSf8_01

Number of times average transmitted code power 6-6.5 dBm on a DPCH channel. Spreading Factor = 8

Data Source

NodeB_RNC_RXI

Source Field

pmDpchCodePowerSf8

Source Section

RadioLinks

pmDpchCodePowerSf8_02

Number of times average transmitted code power 6.5-7 dBm on a DPCH channel. Spreading Factor = 8

Data Source

NodeB_RNC_RXI

Source Field

pmDpchCodePowerSf8

Source Section

RadioLinks

pmDpchCodePowerSf8_03

Number of times average transmitted code power 7-7.5 dBm on a DPCH channel. Spreading Factor = 8

© Copyright IBM Corp. 2008, 2009. All Rights Reserved.

Data Source

NodeB_RNC_RXI

Source Field

pmDpchCodePowerSf8

Source Section

RadioLinks

pmDpchCodePowerSf8_04

Number of times average transmitted code power 7.5-8 dBm on a DPCH channel. Spreading Factor = 8

Data Source

NodeB_RNC_RXI

Source Field

pmDpchCodePowerSf8

Source Section

RadioLinks

pmDpchCodePowerSf8_05

Number of times average transmitted code power 8-8.5 dBm on a DPCH channel. Spreading Factor = 8

Data Source

NodeB_RNC_RXI

Source Field

pmDpchCodePowerSf8

Source Section

RadioLinks

pmDpchCodePowerSf8_06

Number of times average transmitted code power 8.5-9 dBm on a DPCH channel. Spreading Factor = 8

Data Source

NodeB_RNC_RXI

Source Field

pmDpchCodePowerSf8

Source Section

RadioLinks

pmDpchCodePowerSf8_07

Number of times average transmitted code power 9-9.5 dBm on a DPCH channel. Spreading Factor = 8

Data Source

NodeB_RNC_RXI

Source Field

pmDpchCodePowerSf8

Source Section

RadioLinks

pmDpchCodePowerSf8_08

Number of times average transmitted code power 9.5-10 dBm on a DPCH channel. Spreading Factor = 8

Data Source

NodeB_RNC_RXI

Source Field

pmDpchCodePowerSf8

Source Section

RadioLinks

pmDpchCodePowerSf8_09

Number of times average transmitted code power 10-10.5 dBm on a DPCH channel. Spreading Factor = 8

© Copyright IBM Corp. 2008, 2009. All Rights Reserved.

Data Source

NodeB_RNC_RXI

Source Field

pmDpchCodePowerSf8

Source Section

RadioLinks

pmDpchCodePowerSf8_10

Number of times average transmitted code power 10.5-11 dBm on a DPCH channel. Spreading Factor = 8

Data Source

NodeB_RNC_RXI

Source Field

pmDpchCodePowerSf8

Source Section

RadioLinks

pmDpchCodePowerSf8_11

Number of times average transmitted code power 11-11.5 dBm on a DPCH channel. Spreading Factor = 8

Data Source

NodeB_RNC_RXI

Source Field

pmDpchCodePowerSf8

Source Section

RadioLinks

pmDpchCodePowerSf8_12

Number of times average transmitted code power 11.5-12 dBm on a DPCH channel. Spreading Factor = 8

Data Source

NodeB_RNC_RXI

Source Field

pmDpchCodePowerSf8

Source Section

RadioLinks

pmDpchCodePowerSf8_13

Number of times average transmitted code power 12-12.5 dBm on a DPCH channel. Spreading Factor = 8

Data Source

NodeB_RNC_RXI

Source Field

pmDpchCodePowerSf8

Source Section

RadioLinks

pmDpchCodePowerSf8_14

Number of times average transmitted code power 12.5-13 dBm on a DPCH channel. Spreading Factor = 8

Data Source

NodeB_RNC_RXI

Source Field

pmDpchCodePowerSf8

Source Section

RadioLinks

pmDpchCodePowerSf8_15

Number of times average transmitted code power 13-13.5 dBm on a DPCH channel. Spreading Factor = 8

© Copyright IBM Corp. 2008, 2009. All Rights Reserved.

Data Source

NodeB_RNC_RXI

Source Field

pmDpchCodePowerSf8

Source Section

RadioLinks

pmDpchCodePowerSf8_16

Number of times average transmitted code power 13.5-14 dBm on a DPCH channel. Spreading Factor = 8

Data Source

NodeB_RNC_RXI

Source Field

pmDpchCodePowerSf8

Source Section

RadioLinks

pmDpchCodePowerSf8_17

Number of times average transmitted code power 14-14.5 dBm on a DPCH channel. Spreading Factor = 8

Data Source

NodeB_RNC_RXI

Source Field

pmDpchCodePowerSf8

Source Section

RadioLinks

pmDpchCodePowerSf8_18

Number of times average transmitted code power 14.5-15 dBm on a DPCH channel. Spreading Factor = 8

Data Source

NodeB_RNC_RXI

Source Field

pmDpchCodePowerSf8

Source Section

RadioLinks

pmDpchCodePowerSf8_19

Number of times average transmitted code power 15-15.5 dBm on a DPCH channel. Spreading Factor = 8

Data Source

NodeB_RNC_RXI

Source Field

pmDpchCodePowerSf8

Source Section

RadioLinks

pmDpchCodePowerSf8_20

Number of times average transmitted code power 15.5-16 dBm on a DPCH channel. Spreading Factor = 8

Data Source

NodeB_RNC_RXI

Source Field

pmDpchCodePowerSf8

Source Section

RadioLinks

pmDpchCodePowerSf8_21

Number of times average transmitted code power 16-16.5 dBm on a DPCH channel. Spreading Factor = 8

© Copyright IBM Corp. 2008, 2009. All Rights Reserved.

Data Source

NodeB_RNC_RXI

Source Field

pmDpchCodePowerSf8

Source Section

RadioLinks

pmDpchCodePowerSf8_22

Number of times average transmitted code power 16.5-17 dBm on a DPCH channel. Spreading Factor = 8

Data Source

NodeB_RNC_RXI

Source Field

pmDpchCodePowerSf8

Source Section

RadioLinks

pmDpchCodePowerSf8_23

Number of times average transmitted code power 17-17.5 dBm on a DPCH channel. Spreading Factor = 8

Data Source

NodeB_RNC_RXI

Source Field

pmDpchCodePowerSf8

Source Section

RadioLinks

pmDpchCodePowerSf8_24

Number of times average transmitted code power 17.5-18 dBm on a DPCH channel. Spreading Factor = 8

Data Source

NodeB_RNC_RXI

Source Field

pmDpchCodePowerSf8

Source Section

RadioLinks

pmDpchCodePowerSf8_25

Number of times average transmitted code power 18-18.5 dBm on a DPCH channel. Spreading Factor = 8

Data Source

NodeB_RNC_RXI

Source Field

pmDpchCodePowerSf8

Source Section

RadioLinks

pmDpchCodePowerSf8_26

Number of times average transmitted code power 18.5-19 dBm on a DPCH channel. Spreading Factor = 8

Data Source

NodeB_RNC_RXI

Source Field

pmDpchCodePowerSf8

Source Section

RadioLinks

pmDpchCodePowerSf8_27

Number of times average transmitted code power 19-19.5 dBm on a DPCH channel. Spreading Factor = 8

© Copyright IBM Corp. 2008, 2009. All Rights Reserved.

Data Source

NodeB_RNC_RXI

Source Field

pmDpchCodePowerSf8

Source Section

RadioLinks

pmDpchCodePowerSf8_28

Number of times average transmitted code power 19.5-20 dBm on a DPCH channel. Spreading Factor = 8

Data Source

NodeB_RNC_RXI

Source Field

pmDpchCodePowerSf8

Source Section

RadioLinks

pmDpchCodePowerSf8_29

Number of times average transmitted code power 20-20.5 dBm on a DPCH channel. Spreading Factor = 8

Data Source

NodeB_RNC_RXI

Source Field

pmDpchCodePowerSf8

Source Section

RadioLinks

pmDpchCodePowerSf8_30

Number of times average transmitted code power 20.5-21 dBm on a DPCH channel. Spreading Factor = 8

Data Source

NodeB_RNC_RXI

Source Field

pmDpchCodePowerSf8

Source Section

RadioLinks

pmDpchCodePowerSf8_31

Number of times average transmitted code power 21-21.5 dBm on a DPCH channel. Spreading Factor = 8

Data Source

NodeB_RNC_RXI

Source Field

pmDpchCodePowerSf8

Source Section

RadioLinks

pmDpchCodePowerSf8_32

Number of times average transmitted code power 21.5-22 dBm on a DPCH channel. Spreading Factor = 8

Data Source

NodeB_RNC_RXI

Source Field

pmDpchCodePowerSf8

Source Section

RadioLinks

pmDpchCodePowerSf8_33

Number of times average transmitted code power 22-22.5 dBm on a DPCH channel. Spreading Factor = 8

© Copyright IBM Corp. 2008, 2009. All Rights Reserved.

Data Source

NodeB_RNC_RXI

Source Field

pmDpchCodePowerSf8

Source Section

RadioLinks

pmDpchCodePowerSf8_34

Number of times average transmitted code power 22.5-23 dBm on a DPCH channel. Spreading Factor = 8

Data Source

NodeB_RNC_RXI

Source Field

pmDpchCodePowerSf8

Source Section

RadioLinks

pmDpchCodePowerSf8_35

Number of times average transmitted code power 23-23.5 dBm on a DPCH channel. Spreading Factor = 8

Data Source

NodeB_RNC_RXI

Source Field

pmDpchCodePowerSf8

Source Section

RadioLinks

pmDpchCodePowerSf8_36

Number of times average transmitted code power 23.5-24 dBm on a DPCH channel. Spreading Factor = 8

Data Source

NodeB_RNC_RXI

Source Field

pmDpchCodePowerSf8

Source Section

RadioLinks

pmDpchCodePowerSf8_37

Number of times average transmitted code power 24-24.5 dBm on a DPCH channel. Spreading Factor = 8

Data Source

NodeB_RNC_RXI

Source Field

pmDpchCodePowerSf8

Source Section

RadioLinks

pmDpchCodePowerSf8_38

Number of times average transmitted code power 24.5-25 dBm on a DPCH channel. Spreading Factor = 8

Data Source

NodeB_RNC_RXI

Source Field

pmDpchCodePowerSf8

Source Section

RadioLinks

pmDpchCodePowerSf8_39

Number of times average transmitted code power 25-25.5 dBm on a DPCH channel. Spreading Factor = 8

© Copyright IBM Corp. 2008, 2009. All Rights Reserved.

Data Source

NodeB_RNC_RXI

Source Field

pmDpchCodePowerSf8

Source Section

RadioLinks

pmDpchCodePowerSf8_40

Number of times average transmitted code power 25.5-26 dBm on a DPCH channel. Spreading Factor = 8

Data Source

NodeB_RNC_RXI

Source Field

pmDpchCodePowerSf8

Source Section

RadioLinks

pmDpchCodePowerSf8_41

Number of times average transmitted code power 26-26.5 dBm on a DPCH channel. Spreading Factor = 8

Data Source

NodeB_RNC_RXI

Source Field

pmDpchCodePowerSf8

Source Section

RadioLinks

pmDpchCodePowerSf8_42

Number of times average transmitted code power 26.5-27 dBm on a DPCH channel. Spreading Factor = 8

Data Source

NodeB_RNC_RXI

Source Field

pmDpchCodePowerSf8

Source Section

RadioLinks

pmDpchCodePowerSf8_43

Number of times average transmitted code power 27-27.5 dBm on a DPCH channel. Spreading Factor = 8

Data Source

NodeB_RNC_RXI

Source Field

pmDpchCodePowerSf8

Source Section

RadioLinks

pmDpchCodePowerSf8_44

Number of times average transmitted code power 27.5-28 dBm on a DPCH channel. Spreading Factor = 8

Data Source

NodeB_RNC_RXI

Source Field

pmDpchCodePowerSf8

Source Section

RadioLinks

pmDpchCodePowerSf8_45

Number of times average transmitted code power 28-28.5 dBm on a DPCH channel. Spreading Factor = 8

© Copyright IBM Corp. 2008, 2009. All Rights Reserved.

Data Source

NodeB_RNC_RXI

Source Field

pmDpchCodePowerSf8

Source Section

RadioLinks

pmDpchCodePowerSf8_46

Number of times average transmitted code power 28.5-29 dBm on a DPCH channel. Spreading Factor = 8

Data Source

NodeB_RNC_RXI

Source Field

pmDpchCodePowerSf8

Source Section

RadioLinks

pmDpchCodePowerSf8_47

Number of times average transmitted code power 29-29.5 dBm on a DPCH channel. Spreading Factor = 8

Data Source

NodeB_RNC_RXI

Source Field

pmDpchCodePowerSf8

Source Section

RadioLinks

pmDpchCodePowerSf8_48

Number of times average transmitted code power 29.5-30 dBm on a DPCH channel. Spreading Factor = 8

Data Source

NodeB_RNC_RXI

Source Field

pmDpchCodePowerSf8

Source Section

RadioLinks

pmDpchCodePowerSf8_49

Number of times average transmitted code power 30-30.5 dBm on a DPCH channel. Spreading Factor = 8

Data Source

NodeB_RNC_RXI

Source Field

pmDpchCodePowerSf8

Source Section

RadioLinks

pmDpchCodePowerSf8_50

Number of times average transmitted code power 30.5-31 dBm on a DPCH channel. Spreading Factor = 8

Data Source

NodeB_RNC_RXI

Source Field

pmDpchCodePowerSf8

Source Section

RadioLinks

pmDpchCodePowerSf8_51

Number of times average transmitted code power 31-31.5 dBm on a DPCH channel. Spreading Factor = 8

© Copyright IBM Corp. 2008, 2009. All Rights Reserved.

Data Source

NodeB_RNC_RXI

Source Field

pmDpchCodePowerSf8

Source Section

RadioLinks

pmDpchCodePowerSf8_52

Number of times average transmitted code power 31.5-32 dBm on a DPCH channel. Spreading Factor = 8

Data Source

NodeB_RNC_RXI

Source Field

pmDpchCodePowerSf8

Source Section

RadioLinks

pmDpchCodePowerSf8_53

Number of times average transmitted code power 32-32.5 dBm on a DPCH channel. Spreading Factor = 8

Data Source

NodeB_RNC_RXI

Source Field

pmDpchCodePowerSf8

Source Section

RadioLinks

pmDpchCodePowerSf8_54

Number of times average transmitted code power 32.5-33 dBm on a DPCH channel. Spreading Factor = 8

Data Source

NodeB_RNC_RXI

Source Field

pmDpchCodePowerSf8

Source Section

RadioLinks

pmDpchCodePowerSf8_55

Number of times average transmitted code power 33-33.5 dBm on a DPCH channel. Spreading Factor = 8

Data Source

NodeB_RNC_RXI

Source Field

pmDpchCodePowerSf8

Source Section

RadioLinks

pmDpchCodePowerSf8_56

Number of times average transmitted code power 33.5-34 dBm on a DPCH channel. Spreading Factor = 8

Data Source

NodeB_RNC_RXI

Source Field

pmDpchCodePowerSf8

Source Section

RadioLinks

pmDpchCodePowerSf8_57

Number of times average transmitted code power 34-34.5 dBm on a DPCH channel. Spreading Factor = 8

© Copyright IBM Corp. 2008, 2009. All Rights Reserved.

Data Source

NodeB_RNC_RXI

Source Field

pmDpchCodePowerSf8

Source Section

RadioLinks

pmDpchCodePowerSf8_58

Number of times average transmitted code power 34.5-35 dBm on a DPCH channel. Spreading Factor = 8

Data Source

NodeB_RNC_RXI

Source Field

pmDpchCodePowerSf8

Source Section

RadioLinks

pmDpchCodePowerSf8_59

Number of times average transmitted code power 35-35.5 dBm on a DPCH channel. Spreading Factor = 8

Data Source

NodeB_RNC_RXI

Source Field

pmDpchCodePowerSf8

Source Section

RadioLinks

pmDpchCodePowerSf8_60

Number of times average transmitted code power 35.5-36 dBm on a DPCH channel. Spreading Factor = 8

Data Source

NodeB_RNC_RXI

Source Field

pmDpchCodePowerSf8

Source Section

RadioLinks

pmDpchCodePowerSf8_61

Number of times average transmitted code power 36-36.5 dBm on a DPCH channel. Spreading Factor = 8

Data Source

NodeB_RNC_RXI

Source Field

pmDpchCodePowerSf8

Source Section

RadioLinks

pmDpchCodePowerSf8_62

Number of times average transmitted code power 36.5-37 dBm on a DPCH channel. Spreading Factor = 8

Data Source

NodeB_RNC_RXI

Source Field

pmDpchCodePowerSf8

Source Section

RadioLinks

pmDpchCodePowerSf8_63

Number of times average transmitted code power 37-37.5 dBm on a DPCH channel. Spreading Factor = 8

© Copyright IBM Corp. 2008, 2009. All Rights Reserved.

Data Source

NodeB_RNC_RXI

Source Field

pmDpchCodePowerSf8

Source Section

RadioLinks

pmDpchCodePowerSf8_64

Number of times average transmitted code power 37.5-38 dBm on a DPCH channel. Spreading Factor = 8

Data Source

NodeB_RNC_RXI

Source Field

pmDpchCodePowerSf8

Source Section

RadioLinks

pmDpchCodePowerSf8_65

Number of times average transmitted code power 38-38.5 dBm on a DPCH channel. Spreading Factor = 8

Data Source

NodeB_RNC_RXI

Source Field

pmDpchCodePowerSf8

Source Section

RadioLinks

pmDpchCodePowerSf8_66

Number of times average transmitted code power 38.5-39 dBm on a DPCH channel. Spreading Factor = 8

Data Source

NodeB_RNC_RXI

Source Field

pmDpchCodePowerSf8

Source Section

RadioLinks

pmDpchCodePowerSf8_67

Number of times average transmitted code power 39-39.5 dBm on a DPCH channel. Spreading Factor = 8

Data Source

NodeB_RNC_RXI

Source Field

pmDpchCodePowerSf8

Source Section

RadioLinks

pmDpchCodePowerSf8_68

Number of times average transmitted code power 39.5-40 dBm on a DPCH channel. Spreading Factor = 8

Data Source

NodeB_RNC_RXI

Source Field

pmDpchCodePowerSf8

Source Section

RadioLinks

pmDpchCodePowerSf8_69

Number of times average transmitted code power 40-40.5 dBm on a DPCH channel. Spreading Factor = 8

© Copyright IBM Corp. 2008, 2009. All Rights Reserved.

Data Source

NodeB_RNC_RXI

Source Field

pmDpchCodePowerSf8

Source Section

RadioLinks

pmDpchCodePowerSf8_70

Number of times average transmitted code power 40.5-41 dBm on a DPCH channel. Spreading Factor = 8

Data Source

NodeB_RNC_RXI

Source Field

pmDpchCodePowerSf8

Source Section

RadioLinks

pmDpchCodePowerSf8_71

Number of times average transmitted code power 41-41.5 dBm on a DPCH channel. Spreading Factor = 8

Data Source

NodeB_RNC_RXI

Source Field

pmDpchCodePowerSf8

Source Section

RadioLinks

pmDpchCodePowerSf8_72

Number of times average transmitted code power 41.5-42 dBm on a DPCH channel. Spreading Factor = 8

Data Source

NodeB_RNC_RXI

Source Field

pmDpchCodePowerSf8

Source Section

RadioLinks

pmDpchCodePowerSf8_73

Number of times average transmitted code power 42-42.5 dBm on a DPCH channel. Spreading Factor = 8

Data Source

NodeB_RNC_RXI

Source Field

pmDpchCodePowerSf8

Source Section

RadioLinks

pmDpchCodePowerSf8_74

Number of times average transmitted code power 42.5-43 dBm on a DPCH channel. Spreading Factor = 8

Data Source

NodeB_RNC_RXI

Source Field

pmDpchCodePowerSf8

Source Section

RadioLinks

pmDpchCodePwrSf128P5MD_00

The average transmitted code power on a DPCH channel for spreading factor 128. In order to control load, number of measurements are restricted per TXB. Maximum number of

© Copyright IBM Corp. 2008, 2009. All Rights Reserved.

measurements are 10 % of the maximum number of CEs per TXB. Number of samples in the range MIN_VALUE..6dBm

Data Source

NodeB_RNC_RXI

Source Field

pmDpchCodePowerSf128

Source Section

RadioLinks

pmDpchCodePwrSf128P5MD_01

The average transmitted code power on a DPCH channel for spreading factor 128. In order to control load, number of measurements are restricted per TXB. Maximum number of measurements are 10 % of the maximum number of CEs per TXB. Number of samples in the range 6..7 dBm

Data Source

NodeB_RNC_RXI

Source Field

pmDpchCodePowerSf128

Source Section

RadioLinks

pmDpchCodePwrSf128P5MD_02

The average transmitted code power on a DPCH channel for spreading factor 128. In order to control load, number of measurements are restricted per TXB. Maximum number of measurements are 10 % of the maximum number of CEs per TXB. Number of samples in the range 7..8 dBm

Data Source

NodeB_RNC_RXI

Source Field

pmDpchCodePowerSf128

Source Section

RadioLinks

pmDpchCodePwrSf128P5MD_03

The average transmitted code power on a DPCH channel for spreading factor 128. In order to control load, number of measurements are restricted per TXB. Maximum number of measurements are 10 % of the maximum number of CEs per TXB. Number of samples in the range 8..9 dBm

Data Source

NodeB_RNC_RXI

Source Field

pmDpchCodePowerSf128

Source Section

RadioLinks

pmDpchCodePwrSf128P5MD_04

The average transmitted code power on a DPCH channel for spreading factor 128. In order to control load, number of measurements are restricted per TXB. Maximum number of measurements are 10 % of the maximum number of CEs per TXB. Number of samples in the range 9..10 dBm

Data Source

NodeB_RNC_RXI

Source Field

pmDpchCodePowerSf128

Source Section

RadioLinks

pmDpchCodePwrSf128P5MD_05

The average transmitted code power on a DPCH channel for spreading factor 128. In order to control load, number of measurements are restricted per TXB. Maximum number of measurements are 10 % of the maximum number of CEs per TXB. Number of samples in the range 10..11 dBm

© Copyright IBM Corp. 2008, 2009. All Rights Reserved.

Data Source

NodeB_RNC_RXI

Source Field

pmDpchCodePowerSf128

Source Section

RadioLinks

pmDpchCodePwrSf128P5MD_06

The average transmitted code power on a DPCH channel for spreading factor 128. In order to control load, number of measurements are restricted per TXB. Maximum number of measurements are 10 % of the maximum number of CEs per TXB. Number of samples in the range 11..12 dBm

Data Source

NodeB_RNC_RXI

Source Field

pmDpchCodePowerSf128

Source Section

RadioLinks

pmDpchCodePwrSf128P5MD_07

The average transmitted code power on a DPCH channel for spreading factor 128. In order to control load, number of measurements are restricted per TXB. Maximum number of measurements are 10 % of the maximum number of CEs per TXB. Number of samples in the range 12..13 dBm

Data Source

NodeB_RNC_RXI

Source Field

pmDpchCodePowerSf128

Source Section

RadioLinks

pmDpchCodePwrSf128P5MD_08

The average transmitted code power on a DPCH channel for spreading factor 128. In order to control load, number of measurements are restricted per TXB. Maximum number of measurements are 10 % of the maximum number of CEs per TXB. Number of samples in the range 13..14 dBm

Data Source

NodeB_RNC_RXI

Source Field

pmDpchCodePowerSf128

Source Section

RadioLinks

pmDpchCodePwrSf128P5MD_09

The average transmitted code power on a DPCH channel for spreading factor 128. In order to control load, number of measurements are restricted per TXB. Maximum number of measurements are 10 % of the maximum number of CEs per TXB. Number of samples in the range 14..15 dBm

Data Source

NodeB_RNC_RXI

Source Field

pmDpchCodePowerSf128

Source Section

RadioLinks

pmDpchCodePwrSf128P5MD_10

The average transmitted code power on a DPCH channel for spreading factor 128. In order to control load, number of measurements are restricted per TXB. Maximum number of measurements are 10 % of the maximum number of CEs per TXB. Number of samples in the range 15..16 dBm

Data Source

NodeB_RNC_RXI

© Copyright IBM Corp. 2008, 2009. All Rights Reserved.

Source Field

pmDpchCodePowerSf128

Source Section

RadioLinks

pmDpchCodePwrSf128P5MD_11

The average transmitted code power on a DPCH channel for spreading factor 128. In order to control load, number of measurements are restricted per TXB. Maximum number of measurements are 10 % of the maximum number of CEs per TXB. Number of samples in the range 16..17 dBm

Data Source

NodeB_RNC_RXI

Source Field

pmDpchCodePowerSf128

Source Section

RadioLinks

pmDpchCodePwrSf128P5MD_12

The average transmitted code power on a DPCH channel for spreading factor 128. In order to control load, number of measurements are restricted per TXB. Maximum number of measurements are 10 % of the maximum number of CEs per TXB. Number of samples in the range 17..18 dBm

Data Source

NodeB_RNC_RXI

Source Field

pmDpchCodePowerSf128

Source Section

RadioLinks

pmDpchCodePwrSf128P5MD_13

The average transmitted code power on a DPCH channel for spreading factor 128. In order to control load, number of measurements are restricted per TXB. Maximum number of

measurements are 10 % of the maximum number of CEs per TXB. Number of samples in the range 18..19 dBm

Data Source

NodeB_RNC_RXI

Source Field

pmDpchCodePowerSf128

Source Section

RadioLinks

pmDpchCodePwrSf128P5MD_14

The average transmitted code power on a DPCH channel for spreading factor 128. In order to control load, number of measurements are restricted per TXB. Maximum number of measurements are 10 % of the maximum number of CEs per TXB. Number of samples in the range 19..20 dBm

Data Source

NodeB_RNC_RXI

Source Field

pmDpchCodePowerSf128

Source Section

RadioLinks

pmDpchCodePwrSf128P5MD_15

The average transmitted code power on a DPCH channel for spreading factor 128. In order to control load, number of measurements are restricted per TXB. Maximum number of measurements are 10 % of the maximum number of CEs per TXB. Number of samples in the range 20..21 dBm

Data Source

NodeB_RNC_RXI

Source Field

pmDpchCodePowerSf128

© Copyright IBM Corp. 2008, 2009. All Rights Reserved.

Source Section

RadioLinks

pmDpchCodePwrSf128P5MD_16

The average transmitted code power on a DPCH channel for spreading factor 128. In order to control load, number of measurements are restricted per TXB. Maximum number of measurements are 10 % of the maximum number of CEs per TXB. Number of samples in the range 21..22 dBm

Data Source

NodeB_RNC_RXI

Source Field

pmDpchCodePowerSf128

Source Section

RadioLinks

pmDpchCodePwrSf128P5MD_17

The average transmitted code power on a DPCH channel for spreading factor 128. In order to control load, number of measurements are restricted per TXB. Maximum number of measurements are 10 % of the maximum number of CEs per TXB. Number of samples in the range 22..23 dBm

Data Source

NodeB_RNC_RXI

Source Field

pmDpchCodePowerSf128

Source Section

RadioLinks

pmDpchCodePwrSf128P5MD_18

The average transmitted code power on a DPCH channel for spreading factor 128. In order to control load, number of measurements are restricted per TXB. Maximum number of measurements are 10 % of the maximum number of CEs per TXB. Number of samples in the range 23..24 dBm

Data Source

NodeB_RNC_RXI

Source Field

pmDpchCodePowerSf128

Source Section

RadioLinks

pmDpchCodePwrSf128P5MD_19

The average transmitted code power on a DPCH channel for spreading factor 128. In order to control load, number of measurements are restricted per TXB. Maximum number of measurements are 10 % of the maximum number of CEs per TXB. Number of samples in the range 24..25 dBm

Data Source

NodeB_RNC_RXI

Source Field

pmDpchCodePowerSf128

Source Section

RadioLinks

pmDpchCodePwrSf128P5MD_20

The average transmitted code power on a DPCH channel for spreading factor 128. In order to control load, number of measurements are restricted per TXB. Maximum number of measurements are 10 % of the maximum number of CEs per TXB. Number of samples in the range 25..26 dBm

Data Source

NodeB_RNC_RXI

Source Field

pmDpchCodePowerSf128

Source Section

RadioLinks

© Copyright IBM Corp. 2008, 2009. All Rights Reserved.

pmDpchCodePwrSf128P5MD_21

The average transmitted code power on a DPCH channel for spreading factor 128. In order to control load, number of measurements are restricted per TXB. Maximum number of measurements are 10 % of the maximum number of CEs per TXB. Number of samples in the range 26..27 dBm

Data Source

NodeB_RNC_RXI

Source Field

pmDpchCodePowerSf128

Source Section

RadioLinks

pmDpchCodePwrSf128P5MD_22

The average transmitted code power on a DPCH channel for spreading factor 128. In order to control load, number of measurements are restricted per TXB. Maximum number of measurements are 10 % of the maximum number of CEs per TXB. Number of samples in the range 27..28 dBm

Data Source

NodeB_RNC_RXI

Source Field

pmDpchCodePowerSf128

Source Section

RadioLinks

pmDpchCodePwrSf128P5MD_23

The average transmitted code power on a DPCH channel for spreading factor 128. In order to control load, number of measurements are restricted per TXB. Maximum number of measurements are 10 % of the maximum number of CEs per TXB. Number of samples in the range 28..29 dBm

Data Source

NodeB_RNC_RXI

Source Field

pmDpchCodePowerSf128

Source Section

RadioLinks

pmDpchCodePwrSf128P5MD_24

The average transmitted code power on a DPCH channel for spreading factor 128. In order to control load, number of measurements are restricted per TXB. Maximum number of measurements are 10 % of the maximum number of CEs per TXB. Number of samples in the range 29..30 dBm

Data Source

NodeB_RNC_RXI

Source Field

pmDpchCodePowerSf128

Source Section

RadioLinks

pmDpchCodePwrSf128P5MD_25

The average transmitted code power on a DPCH channel for spreading factor 128. In order to control load, number of measurements are restricted per TXB. Maximum number of measurements are 10 % of the maximum number of CEs per TXB. Number of samples in the range 30..31 dBm

Data Source

NodeB_RNC_RXI

Source Field

pmDpchCodePowerSf128

Source Section

RadioLinks

pmDpchCodePwrSf128P5MD_26

The average transmitted code power on a DPCH channel for spreading factor 128. In order to control load, number of measurements are restricted per TXB. Maximum number of

© Copyright IBM Corp. 2008, 2009. All Rights Reserved.

measurements are 10 % of the maximum number of CEs per TXB. Number of samples in the range 31..32 dBm

Data Source

NodeB_RNC_RXI

Source Field

pmDpchCodePowerSf128

Source Section

RadioLinks

pmDpchCodePwrSf128P5MD_27

The average transmitted code power on a DPCH channel for spreading factor 128. In order to control load, number of measurements are restricted per TXB. Maximum number of measurements are 10 % of the maximum number of CEs per TXB. Number of samples in the range 32..33 dBm

Data Source

NodeB_RNC_RXI

Source Field

pmDpchCodePowerSf128

Source Section

RadioLinks

pmDpchCodePwrSf128P5MD_28

The average transmitted code power on a DPCH channel for spreading factor 128. In order to control load, number of measurements are restricted per TXB. Maximum number of measurements are 10 % of the maximum number of CEs per TXB. Number of samples in the range 33..34 dBm

Data Source

NodeB_RNC_RXI

Source Field

pmDpchCodePowerSf128

Source Section

RadioLinks

pmDpchCodePwrSf128P5MD_29

The average transmitted code power on a DPCH channel for spreading factor 128. In order to control load, number of measurements are restricted per TXB. Maximum number of measurements are 10 % of the maximum number of CEs per TXB. Number of samples in the range 34..35 dBm

Data Source

NodeB_RNC_RXI

Source Field

pmDpchCodePowerSf128

Source Section

RadioLinks

pmDpchCodePwrSf128P5MD_30

The average transmitted code power on a DPCH channel for spreading factor 128. In order to control load, number of measurements are restricted per TXB. Maximum number of measurements are 10 % of the maximum number of CEs per TXB. Number of samples in the range 35..36 dBm

Data Source

NodeB_RNC_RXI

Source Field

pmDpchCodePowerSf128

Source Section

RadioLinks

pmDpchCodePwrSf128P5MD_31

The average transmitted code power on a DPCH channel for spreading factor 128. In order to control load, number of measurements are restricted per TXB. Maximum number of measurements are 10 % of the maximum number of CEs per TXB. Number of samples in the range 36..37 dBm

© Copyright IBM Corp. 2008, 2009. All Rights Reserved.

Data Source

NodeB_RNC_RXI

Source Field

pmDpchCodePowerSf128

Source Section

RadioLinks

pmDpchCodePwrSf128P5MD_32

The average transmitted code power on a DPCH channel for spreading factor 128. In order to control load, number of measurements are restricted per TXB. Maximum number of measurements are 10 % of the maximum number of CEs per TXB. Number of samples in the range 37..38 dBm

Data Source

NodeB_RNC_RXI

Source Field

pmDpchCodePowerSf128

Source Section

RadioLinks

pmDpchCodePwrSf128P5MD_33

The average transmitted code power on a DPCH channel for spreading factor 128. In order to control load, number of measurements are restricted per TXB. Maximum number of measurements are 10 % of the maximum number of CEs per TXB. Number of samples in the range 38..39 dBm

Data Source

NodeB_RNC_RXI

Source Field

pmDpchCodePowerSf128

Source Section

RadioLinks

pmDpchCodePwrSf128P5MD_34

The average transmitted code power on a DPCH channel for spreading factor 128. In order to control load, number of measurements are restricted per TXB. Maximum number of measurements are 10 % of the maximum number of CEs per TXB. Number of samples in the range 39..40 dBm

Data Source

NodeB_RNC_RXI

Source Field

pmDpchCodePowerSf128

Source Section

RadioLinks

pmDpchCodePwrSf128P5MD_35

The average transmitted code power on a DPCH channel for spreading factor 128. In order to control load, number of measurements are restricted per TXB. Maximum number of measurements are 10 % of the maximum number of CEs per TXB. Number of samples in the range 40..41 dBm

Data Source

NodeB_RNC_RXI

Source Field

pmDpchCodePowerSf128

Source Section

RadioLinks

pmDpchCodePwrSf128P5MD_36

The average transmitted code power on a DPCH channel for spreading factor 128. In order to control load, number of measurements are restricted per TXB. Maximum number of measurements are 10 % of the maximum number of CEs per TXB. Number of samples in the range 41..42 dBm

Data Source

NodeB_RNC_RXI

© Copyright IBM Corp. 2008, 2009. All Rights Reserved.

Source Field

pmDpchCodePowerSf128

Source Section

RadioLinks

pmDpchCodePwrSf128P5MD_37

The average transmitted code power on a DPCH channel for spreading factor 128. In order to control load, number of measurements are restricted per TXB. Maximum number of measurements are 10 % of the maximum number of CEs per TXB. Number of samples in the range 42..43 dBm

Data Source

NodeB_RNC_RXI

Source Field

pmDpchCodePowerSf128

Source Section

RadioLinks

pmDpchCodePwrSf16P5MD_00

The average transmitted code power on a DPCH channel for spreading factor 16. In order to control load, number of measurements are restricted per TXB. Maximum number of measurements are 10 % of the maximum number of CEs per TXB. Number of samples in the range MIN_VALUE..6dBm

Data Source

NodeB_RNC_RXI

Source Field

pmDpchCodePowerSf16

Source Section

RadioLinks

pmDpchCodePwrSf16P5MD_01

The average transmitted code power on a DPCH channel for spreading factor 16. In order to control load, number of measurements are restricted per TXB. Maximum number of

measurements are 10 % of the maximum number of CEs per TXB. Number of samples in the range 6..7 dBm

Data Source

NodeB_RNC_RXI

Source Field

pmDpchCodePowerSf16

Source Section

RadioLinks

pmDpchCodePwrSf16P5MD_02

The average transmitted code power on a DPCH channel for spreading factor 16. In order to control load, number of measurements are restricted per TXB. Maximum number of measurements are 10 % of the maximum number of CEs per TXB. Number of samples in the range 7..8 dBm

Data Source

NodeB_RNC_RXI

Source Field

pmDpchCodePowerSf16

Source Section

RadioLinks

pmDpchCodePwrSf16P5MD_03

The average transmitted code power on a DPCH channel for spreading factor 16. In order to control load, number of measurements are restricted per TXB. Maximum number of measurements are 10 % of the maximum number of CEs per TXB. Number of samples in the range 8..9 dBm

Data Source

NodeB_RNC_RXI

Source Field

pmDpchCodePowerSf16

© Copyright IBM Corp. 2008, 2009. All Rights Reserved.

Source Section

RadioLinks

pmDpchCodePwrSf16P5MD_04

The average transmitted code power on a DPCH channel for spreading factor 16. In order to control load, number of measurements are restricted per TXB. Maximum number of measurements are 10 % of the maximum number of CEs per TXB. Number of samples in the range 9..10 dBm

Data Source

NodeB_RNC_RXI

Source Field

pmDpchCodePowerSf16

Source Section

RadioLinks

pmDpchCodePwrSf16P5MD_05

The average transmitted code power on a DPCH channel for spreading factor 16. In order to control load, number of measurements are restricted per TXB. Maximum number of measurements are 10 % of the maximum number of CEs per TXB. Number of samples in the range 10..11 dBm

Data Source

NodeB_RNC_RXI

Source Field

pmDpchCodePowerSf16

Source Section

RadioLinks

pmDpchCodePwrSf16P5MD_06

The average transmitted code power on a DPCH channel for spreading factor 16. In order to control load, number of measurements are restricted per TXB. Maximum number of measurements are 10 % of the maximum number of CEs per TXB. Number of samples in the range 11..12 dBm

Data Source

NodeB_RNC_RXI

Source Field

pmDpchCodePowerSf16

Source Section

RadioLinks

pmDpchCodePwrSf16P5MD_07

The average transmitted code power on a DPCH channel for spreading factor 16. In order to control load, number of measurements are restricted per TXB. Maximum number of measurements are 10 % of the maximum number of CEs per TXB. Number of samples in the range 12..13 dBm

Data Source

NodeB_RNC_RXI

Source Field

pmDpchCodePowerSf16

Source Section

RadioLinks

pmDpchCodePwrSf16P5MD_08

The average transmitted code power on a DPCH channel for spreading factor 16. In order to control load, number of measurements are restricted per TXB. Maximum number of measurements are 10 % of the maximum number of CEs per TXB. Number of samples in the range 13..14 dBm

Data Source

NodeB_RNC_RXI

Source Field

pmDpchCodePowerSf16

Source Section

RadioLinks

© Copyright IBM Corp. 2008, 2009. All Rights Reserved.

pmDpchCodePwrSf16P5MD_09

The average transmitted code power on a DPCH channel for spreading factor 16. In order to control load, number of measurements are restricted per TXB. Maximum number of measurements are 10 % of the maximum number of CEs per TXB. Number of samples in the range 14..15 dBm

Data Source

NodeB_RNC_RXI

Source Field

pmDpchCodePowerSf16

Source Section

RadioLinks

pmDpchCodePwrSf16P5MD_10

The average transmitted code power on a DPCH channel for spreading factor 16. In order to control load, number of measurements are restricted per TXB. Maximum number of measurements are 10 % of the maximum number of CEs per TXB. Number of samples in the range 15..16 dBm

Data Source

NodeB_RNC_RXI

Source Field

pmDpchCodePowerSf16

Source Section

RadioLinks

pmDpchCodePwrSf16P5MD_11

The average transmitted code power on a DPCH channel for spreading factor 16. In order to control load, number of measurements are restricted per TXB. Maximum number of measurements are 10 % of the maximum number of CEs per TXB. Number of samples in the range 16..17 dBm

Data Source

NodeB_RNC_RXI

Source Field

pmDpchCodePowerSf16

Source Section

RadioLinks

pmDpchCodePwrSf16P5MD_12

The average transmitted code power on a DPCH channel for spreading factor 16. In order to control load, number of measurements are restricted per TXB. Maximum number of measurements are 10 % of the maximum number of CEs per TXB. Number of samples in the range 17..18 dBm

Data Source

NodeB_RNC_RXI

Source Field

pmDpchCodePowerSf16

Source Section

RadioLinks

pmDpchCodePwrSf16P5MD_13

The average transmitted code power on a DPCH channel for spreading factor 16. In order to control load, number of measurements are restricted per TXB. Maximum number of measurements are 10 % of the maximum number of CEs per TXB. Number of samples in the range 18..19 dBm

Data Source

NodeB_RNC_RXI

Source Field

pmDpchCodePowerSf16

Source Section

RadioLinks

pmDpchCodePwrSf16P5MD_14

The average transmitted code power on a DPCH channel for spreading factor 16. In order to control load, number of measurements are restricted per TXB. Maximum number of

© Copyright IBM Corp. 2008, 2009. All Rights Reserved.

measurements are 10 % of the maximum number of CEs per TXB. Number of samples in the range 19..20 dBm

Data Source

NodeB_RNC_RXI

Source Field

pmDpchCodePowerSf16

Source Section

RadioLinks

pmDpchCodePwrSf16P5MD_15

The average transmitted code power on a DPCH channel for spreading factor 16. In order to control load, number of measurements are restricted per TXB. Maximum number of measurements are 10 % of the maximum number of CEs per TXB. Number of samples in the range 20..21 dBm

Data Source

NodeB_RNC_RXI

Source Field

pmDpchCodePowerSf16

Source Section

RadioLinks

pmDpchCodePwrSf16P5MD_16

The average transmitted code power on a DPCH channel for spreading factor 16. In order to control load, number of measurements are restricted per TXB. Maximum number of measurements are 10 % of the maximum number of CEs per TXB. Number of samples in the range 21..22 dBm

Data Source

NodeB_RNC_RXI

Source Field

pmDpchCodePowerSf16

Source Section

RadioLinks

pmDpchCodePwrSf16P5MD_17

The average transmitted code power on a DPCH channel for spreading factor 16. In order to control load, number of measurements are restricted per TXB. Maximum number of measurements are 10 % of the maximum number of CEs per TXB. Number of samples in the range 22..23 dBm

Data Source

NodeB_RNC_RXI

Source Field

pmDpchCodePowerSf16

Source Section

RadioLinks

pmDpchCodePwrSf16P5MD_18

The average transmitted code power on a DPCH channel for spreading factor 16. In order to control load, number of measurements are restricted per TXB. Maximum number of measurements are 10 % of the maximum number of CEs per TXB. Number of samples in the range 23..24 dBm

Data Source

NodeB_RNC_RXI

Source Field

pmDpchCodePowerSf16

Source Section

RadioLinks

pmDpchCodePwrSf16P5MD_19

The average transmitted code power on a DPCH channel for spreading factor 16. In order to control load, number of measurements are restricted per TXB. Maximum number of measurements are 10 % of the maximum number of CEs per TXB. Number of samples in the range 24..25 dBm

© Copyright IBM Corp. 2008, 2009. All Rights Reserved.

Data Source

NodeB_RNC_RXI

Source Field

pmDpchCodePowerSf16

Source Section

RadioLinks

pmDpchCodePwrSf16P5MD_20

The average transmitted code power on a DPCH channel for spreading factor 16. In order to control load, number of measurements are restricted per TXB. Maximum number of measurements are 10 % of the maximum number of CEs per TXB. Number of samples in the range 25..26 dBm

Data Source

NodeB_RNC_RXI

Source Field

pmDpchCodePowerSf16

Source Section

RadioLinks

pmDpchCodePwrSf16P5MD_21

The average transmitted code power on a DPCH channel for spreading factor 16. In order to control load, number of measurements are restricted per TXB. Maximum number of measurements are 10 % of the maximum number of CEs per TXB. Number of samples in the range 26..27 dBm

Data Source

NodeB_RNC_RXI

Source Field

pmDpchCodePowerSf16

Source Section

RadioLinks

pmDpchCodePwrSf16P5MD_22

The average transmitted code power on a DPCH channel for spreading factor 16. In order to control load, number of measurements are restricted per TXB. Maximum number of measurements are 10 % of the maximum number of CEs per TXB. Number of samples in the range 27..28 dBm

Data Source

NodeB_RNC_RXI

Source Field

pmDpchCodePowerSf16

Source Section

RadioLinks

pmDpchCodePwrSf16P5MD_23

The average transmitted code power on a DPCH channel for spreading factor 16. In order to control load, number of measurements are restricted per TXB. Maximum number of measurements are 10 % of the maximum number of CEs per TXB. Number of samples in the range 28..29 dBm

Data Source

NodeB_RNC_RXI

Source Field

pmDpchCodePowerSf16

Source Section

RadioLinks

pmDpchCodePwrSf16P5MD_24

The average transmitted code power on a DPCH channel for spreading factor 16. In order to control load, number of measurements are restricted per TXB. Maximum number of measurements are 10 % of the maximum number of CEs per TXB. Number of samples in the range 29..30 dBm

Data Source

NodeB_RNC_RXI

© Copyright IBM Corp. 2008, 2009. All Rights Reserved.

Source Field

pmDpchCodePowerSf16

Source Section

RadioLinks

pmDpchCodePwrSf16P5MD_25

The average transmitted code power on a DPCH channel for spreading factor 16. In order to control load, number of measurements are restricted per TXB. Maximum number of measurements are 10 % of the maximum number of CEs per TXB. Number of samples in the range 30..31 dBm

Data Source

NodeB_RNC_RXI

Source Field

pmDpchCodePowerSf16

Source Section

RadioLinks

pmDpchCodePwrSf16P5MD_26

The average transmitted code power on a DPCH channel for spreading factor 16. In order to control load, number of measurements are restricted per TXB. Maximum number of measurements are 10 % of the maximum number of CEs per TXB. Number of samples in the range 31..32 dBm

Data Source

NodeB_RNC_RXI

Source Field

pmDpchCodePowerSf16

Source Section

RadioLinks

pmDpchCodePwrSf16P5MD_27

The average transmitted code power on a DPCH channel for spreading factor 16. In order to control load, number of measurements are restricted per TXB. Maximum number of

measurements are 10 % of the maximum number of CEs per TXB. Number of samples in the range 32..33 dBm

Data Source

NodeB_RNC_RXI

Source Field

pmDpchCodePowerSf16

Source Section

RadioLinks

pmDpchCodePwrSf16P5MD_28

The average transmitted code power on a DPCH channel for spreading factor 16. In order to control load, number of measurements are restricted per TXB. Maximum number of measurements are 10 % of the maximum number of CEs per TXB. Number of samples in the range 33..34 dBm

Data Source

NodeB_RNC_RXI

Source Field

pmDpchCodePowerSf16

Source Section

RadioLinks

pmDpchCodePwrSf16P5MD_29

The average transmitted code power on a DPCH channel for spreading factor 16. In order to control load, number of measurements are restricted per TXB. Maximum number of measurements are 10 % of the maximum number of CEs per TXB. Number of samples in the range 34..35 dBm

Data Source

NodeB_RNC_RXI

Source Field

pmDpchCodePowerSf16

© Copyright IBM Corp. 2008, 2009. All Rights Reserved.

Source Section

RadioLinks

pmDpchCodePwrSf16P5MD_30

The average transmitted code power on a DPCH channel for spreading factor 16. In order to control load, number of measurements are restricted per TXB. Maximum number of measurements are 10 % of the maximum number of CEs per TXB. Number of samples in the range 35..36 dBm

Data Source

NodeB_RNC_RXI

Source Field

pmDpchCodePowerSf16

Source Section

RadioLinks

pmDpchCodePwrSf16P5MD_31

The average transmitted code power on a DPCH channel for spreading factor 16. In order to control load, number of measurements are restricted per TXB. Maximum number of measurements are 10 % of the maximum number of CEs per TXB. Number of samples in the range 36..37 dBm

Data Source

NodeB_RNC_RXI

Source Field

pmDpchCodePowerSf16

Source Section

RadioLinks

pmDpchCodePwrSf16P5MD_32

The average transmitted code power on a DPCH channel for spreading factor 16. In order to control load, number of measurements are restricted per TXB. Maximum number of measurements are 10 % of the maximum number of CEs per TXB. Number of samples in the range 37..38 dBm

Data Source

NodeB_RNC_RXI

Source Field

pmDpchCodePowerSf16

Source Section

RadioLinks

pmDpchCodePwrSf16P5MD_33

The average transmitted code power on a DPCH channel for spreading factor 16. In order to control load, number of measurements are restricted per TXB. Maximum number of measurements are 10 % of the maximum number of CEs per TXB. Number of samples in the range 38..39 dBm

Data Source

NodeB_RNC_RXI

Source Field

pmDpchCodePowerSf16

Source Section

RadioLinks

pmDpchCodePwrSf16P5MD_34

The average transmitted code power on a DPCH channel for spreading factor 16. In order to control load, number of measurements are restricted per TXB. Maximum number of measurements are 10 % of the maximum number of CEs per TXB. Number of samples in the range 39..40 dBm

Data Source

NodeB_RNC_RXI

Source Field

pmDpchCodePowerSf16

Source Section

RadioLinks

© Copyright IBM Corp. 2008, 2009. All Rights Reserved.

pmDpchCodePwrSf16P5MD_35

The average transmitted code power on a DPCH channel for spreading factor 16. In order to control load, number of measurements are restricted per TXB. Maximum number of measurements are 10 % of the maximum number of CEs per TXB. Number of samples in the range 40..41 dBm

Data Source

NodeB_RNC_RXI

Source Field

pmDpchCodePowerSf16

Source Section

RadioLinks

pmDpchCodePwrSf16P5MD_36

The average transmitted code power on a DPCH channel for spreading factor 16. In order to control load, number of measurements are restricted per TXB. Maximum number of measurements are 10 % of the maximum number of CEs per TXB. Number of samples in the range 41..42 dBm

Data Source

NodeB_RNC_RXI

Source Field

pmDpchCodePowerSf16

Source Section

RadioLinks

pmDpchCodePwrSf16P5MD_37

The average transmitted code power on a DPCH channel for spreading factor 16. In order to control load, number of measurements are restricted per TXB. Maximum number of measurements are 10 % of the maximum number of CEs per TXB. Number of samples in the range 42..43 dBm

Data Source

NodeB_RNC_RXI

Source Field

pmDpchCodePowerSf16

Source Section

RadioLinks

pmDpchCodePwrSf256P5MD_00

The average transmitted code power on a DPCH channel for spreading factor 256. In order to control load, number of measurements are restricted per TXB. Maximum number of measurements are 10 % of the maximum number of CEs per TXB. Number of samples in the range MIN_VALUE..6dBm

Data Source

NodeB_RNC_RXI

Source Field

pmDpchCodePowerSf256

Source Section

RadioLinks

pmDpchCodePwrSf256P5MD_01

The average transmitted code power on a DPCH channel for spreading factor 256. In order to control load, number of measurements are restricted per TXB. Maximum number of measurements are 10 % of the maximum number of CEs per TXB. Number of samples in the range 6..7 dBm

Data Source

NodeB_RNC_RXI

Source Field

pmDpchCodePowerSf256

Source Section

RadioLinks

pmDpchCodePwrSf256P5MD_02

The average transmitted code power on a DPCH channel for spreading factor 256. In order to control load, number of measurements are restricted per TXB. Maximum number of

© Copyright IBM Corp. 2008, 2009. All Rights Reserved.

measurements are 10 % of the maximum number of CEs per TXB. Number of samples in the range 7..8 dBm

Data Source

NodeB_RNC_RXI

Source Field

pmDpchCodePowerSf256

Source Section

RadioLinks

pmDpchCodePwrSf256P5MD_03

The average transmitted code power on a DPCH channel for spreading factor 256. In order to control load, number of measurements are restricted per TXB. Maximum number of measurements are 10 % of the maximum number of CEs per TXB. Number of samples in the range 8..9 dBm

Data Source

NodeB_RNC_RXI

Source Field

pmDpchCodePowerSf256

Source Section

RadioLinks

pmDpchCodePwrSf256P5MD_04

The average transmitted code power on a DPCH channel for spreading factor 256. In order to control load, number of measurements are restricted per TXB. Maximum number of measurements are 10 % of the maximum number of CEs per TXB. Number of samples in the range 9..10 dBm

Data Source

NodeB_RNC_RXI

Source Field

pmDpchCodePowerSf256

Source Section

RadioLinks

pmDpchCodePwrSf256P5MD_05

The average transmitted code power on a DPCH channel for spreading factor 256. In order to control load, number of measurements are restricted per TXB. Maximum number of measurements are 10 % of the maximum number of CEs per TXB. Number of samples in the range 10..11 dBm

Data Source

NodeB_RNC_RXI

Source Field

pmDpchCodePowerSf256

Source Section

RadioLinks

pmDpchCodePwrSf256P5MD_06

The average transmitted code power on a DPCH channel for spreading factor 256. In order to control load, number of measurements are restricted per TXB. Maximum number of measurements are 10 % of the maximum number of CEs per TXB. Number of samples in the range 11..12 dBm

Data Source

NodeB_RNC_RXI

Source Field

pmDpchCodePowerSf256

Source Section

RadioLinks

pmDpchCodePwrSf256P5MD_07

The average transmitted code power on a DPCH channel for spreading factor 256. In order to control load, number of measurements are restricted per TXB. Maximum number of measurements are 10 % of the maximum number of CEs per TXB. Number of samples in the range 12..13 dBm

© Copyright IBM Corp. 2008, 2009. All Rights Reserved.

Data Source

NodeB_RNC_RXI

Source Field

pmDpchCodePowerSf256

Source Section

RadioLinks

pmDpchCodePwrSf256P5MD_08

The average transmitted code power on a DPCH channel for spreading factor 256. In order to control load, number of measurements are restricted per TXB. Maximum number of measurements are 10 % of the maximum number of CEs per TXB. Number of samples in the range 13..14 dBm

Data Source

NodeB_RNC_RXI

Source Field

pmDpchCodePowerSf256

Source Section

RadioLinks

pmDpchCodePwrSf256P5MD_09

The average transmitted code power on a DPCH channel for spreading factor 256. In order to control load, number of measurements are restricted per TXB. Maximum number of measurements are 10 % of the maximum number of CEs per TXB. Number of samples in the range 14..15 dBm

Data Source

NodeB_RNC_RXI

Source Field

pmDpchCodePowerSf256

Source Section

RadioLinks

pmDpchCodePwrSf256P5MD_10

The average transmitted code power on a DPCH channel for spreading factor 256. In order to control load, number of measurements are restricted per TXB. Maximum number of measurements are 10 % of the maximum number of CEs per TXB. Number of samples in the range 15..16 dBm

Data Source

NodeB_RNC_RXI

Source Field

pmDpchCodePowerSf256

Source Section

RadioLinks

pmDpchCodePwrSf256P5MD_11

The average transmitted code power on a DPCH channel for spreading factor 256. In order to control load, number of measurements are restricted per TXB. Maximum number of measurements are 10 % of the maximum number of CEs per TXB. Number of samples in the range 16..17 dBm

Data Source

NodeB_RNC_RXI

Source Field

pmDpchCodePowerSf256

Source Section

RadioLinks

pmDpchCodePwrSf256P5MD_12

The average transmitted code power on a DPCH channel for spreading factor 256. In order to control load, number of measurements are restricted per TXB. Maximum number of measurements are 10 % of the maximum number of CEs per TXB. Number of samples in the range 17..18 dBm

Data Source

NodeB_RNC_RXI

© Copyright IBM Corp. 2008, 2009. All Rights Reserved.

Source Field

pmDpchCodePowerSf256

Source Section

RadioLinks

pmDpchCodePwrSf256P5MD_13

The average transmitted code power on a DPCH channel for spreading factor 256. In order to control load, number of measurements are restricted per TXB. Maximum number of measurements are 10 % of the maximum number of CEs per TXB. Number of samples in the range 18..19 dBm

Data Source

NodeB_RNC_RXI

Source Field

pmDpchCodePowerSf256

Source Section

RadioLinks

pmDpchCodePwrSf256P5MD_14

The average transmitted code power on a DPCH channel for spreading factor 256. In order to control load, number of measurements are restricted per TXB. Maximum number of measurements are 10 % of the maximum number of CEs per TXB. Number of samples in the range 19..20 dBm

Data Source

NodeB_RNC_RXI

Source Field

pmDpchCodePowerSf256

Source Section

RadioLinks

pmDpchCodePwrSf256P5MD_15

The average transmitted code power on a DPCH channel for spreading factor 256. In order to control load, number of measurements are restricted per TXB. Maximum number of

measurements are 10 % of the maximum number of CEs per TXB. Number of samples in the range 20..21 dBm

Data Source

NodeB_RNC_RXI

Source Field

pmDpchCodePowerSf256

Source Section

RadioLinks

pmDpchCodePwrSf256P5MD_16

The average transmitted code power on a DPCH channel for spreading factor 256. In order to control load, number of measurements are restricted per TXB. Maximum number of measurements are 10 % of the maximum number of CEs per TXB. Number of samples in the range 21..22 dBm

Data Source

NodeB_RNC_RXI

Source Field

pmDpchCodePowerSf256

Source Section

RadioLinks

pmDpchCodePwrSf256P5MD_17

The average transmitted code power on a DPCH channel for spreading factor 256. In order to control load, number of measurements are restricted per TXB. Maximum number of measurements are 10 % of the maximum number of CEs per TXB. Number of samples in the range 22..23 dBm

Data Source

NodeB_RNC_RXI

Source Field

pmDpchCodePowerSf256

© Copyright IBM Corp. 2008, 2009. All Rights Reserved.

Source Section

RadioLinks

pmDpchCodePwrSf256P5MD_18

The average transmitted code power on a DPCH channel for spreading factor 256. In order to control load, number of measurements are restricted per TXB. Maximum number of measurements are 10 % of the maximum number of CEs per TXB. Number of samples in the range 23..24 dBm

Data Source

NodeB_RNC_RXI

Source Field

pmDpchCodePowerSf256

Source Section

RadioLinks

pmDpchCodePwrSf256P5MD_19

The average transmitted code power on a DPCH channel for spreading factor 256. In order to control load, number of measurements are restricted per TXB. Maximum number of measurements are 10 % of the maximum number of CEs per TXB. Number of samples in the range 24..25 dBm

Data Source

NodeB_RNC_RXI

Source Field

pmDpchCodePowerSf256

Source Section

RadioLinks

pmDpchCodePwrSf256P5MD_20

The average transmitted code power on a DPCH channel for spreading factor 256. In order to control load, number of measurements are restricted per TXB. Maximum number of measurements are 10 % of the maximum number of CEs per TXB. Number of samples in the range 25..26 dBm

Data Source

NodeB_RNC_RXI

Source Field

pmDpchCodePowerSf256

Source Section

RadioLinks

pmDpchCodePwrSf256P5MD_21

The average transmitted code power on a DPCH channel for spreading factor 256. In order to control load, number of measurements are restricted per TXB. Maximum number of measurements are 10 % of the maximum number of CEs per TXB. Number of samples in the range 26..27 dBm

Data Source

NodeB_RNC_RXI

Source Field

pmDpchCodePowerSf256

Source Section

RadioLinks

pmDpchCodePwrSf256P5MD_22

The average transmitted code power on a DPCH channel for spreading factor 256. In order to control load, number of measurements are restricted per TXB. Maximum number of measurements are 10 % of the maximum number of CEs per TXB. Number of samples in the range 27..28 dBm

Data Source

NodeB_RNC_RXI

Source Field

pmDpchCodePowerSf256

Source Section

RadioLinks

© Copyright IBM Corp. 2008, 2009. All Rights Reserved.

pmDpchCodePwrSf256P5MD_23

The average transmitted code power on a DPCH channel for spreading factor 256. In order to control load, number of measurements are restricted per TXB. Maximum number of measurements are 10 % of the maximum number of CEs per TXB. Number of samples in the range 28..29 dBm

Data Source

NodeB_RNC_RXI

Source Field

pmDpchCodePowerSf256

Source Section

RadioLinks

pmDpchCodePwrSf256P5MD_24

The average transmitted code power on a DPCH channel for spreading factor 256. In order to control load, number of measurements are restricted per TXB. Maximum number of measurements are 10 % of the maximum number of CEs per TXB. Number of samples in the range 29..30 dBm

Data Source

NodeB_RNC_RXI

Source Field

pmDpchCodePowerSf256

Source Section

RadioLinks

pmDpchCodePwrSf256P5MD_25

The average transmitted code power on a DPCH channel for spreading factor 256. In order to control load, number of measurements are restricted per TXB. Maximum number of measurements are 10 % of the maximum number of CEs per TXB. Number of samples in the range 30..31 dBm

Data Source

NodeB_RNC_RXI

Source Field

pmDpchCodePowerSf256

Source Section

RadioLinks

pmDpchCodePwrSf256P5MD_26

The average transmitted code power on a DPCH channel for spreading factor 256. In order to control load, number of measurements are restricted per TXB. Maximum number of measurements are 10 % of the maximum number of CEs per TXB. Number of samples in the range 31..32 dBm

Data Source

NodeB_RNC_RXI

Source Field

pmDpchCodePowerSf256

Source Section

RadioLinks

pmDpchCodePwrSf256P5MD_27

The average transmitted code power on a DPCH channel for spreading factor 256. In order to control load, number of measurements are restricted per TXB. Maximum number of measurements are 10 % of the maximum number of CEs per TXB. Number of samples in the range 32..33 dBm

Data Source

NodeB_RNC_RXI

Source Field

pmDpchCodePowerSf256

Source Section

RadioLinks

pmDpchCodePwrSf256P5MD_28

The average transmitted code power on a DPCH channel for spreading factor 256. In order to control load, number of measurements are restricted per TXB. Maximum number of

© Copyright IBM Corp. 2008, 2009. All Rights Reserved.

measurements are 10 % of the maximum number of CEs per TXB. Number of samples in the range 33..34 dBm

Data Source

NodeB_RNC_RXI

Source Field

pmDpchCodePowerSf256

Source Section

RadioLinks

pmDpchCodePwrSf256P5MD_29

The average transmitted code power on a DPCH channel for spreading factor 256. In order to control load, number of measurements are restricted per TXB. Maximum number of measurements are 10 % of the maximum number of CEs per TXB. Number of samples in the range 34..35 dBm

Data Source

NodeB_RNC_RXI

Source Field

pmDpchCodePowerSf256

Source Section

RadioLinks

pmDpchCodePwrSf256P5MD_30

The average transmitted code power on a DPCH channel for spreading factor 256. In order to control load, number of measurements are restricted per TXB. Maximum number of measurements are 10 % of the maximum number of CEs per TXB. Number of samples in the range 35..36 dBm

Data Source

NodeB_RNC_RXI

Source Field

pmDpchCodePowerSf256

Source Section

RadioLinks

pmDpchCodePwrSf256P5MD_31

The average transmitted code power on a DPCH channel for spreading factor 256. In order to control load, number of measurements are restricted per TXB. Maximum number of measurements are 10 % of the maximum number of CEs per TXB. Number of samples in the range 36..37 dBm

Data Source

NodeB_RNC_RXI

Source Field

pmDpchCodePowerSf256

Source Section

RadioLinks

pmDpchCodePwrSf256P5MD_32

The average transmitted code power on a DPCH channel for spreading factor 256. In order to control load, number of measurements are restricted per TXB. Maximum number of measurements are 10 % of the maximum number of CEs per TXB. Number of samples in the range 37..38 dBm

Data Source

NodeB_RNC_RXI

Source Field

pmDpchCodePowerSf256

Source Section

RadioLinks

pmDpchCodePwrSf256P5MD_33

The average transmitted code power on a DPCH channel for spreading factor 256. In order to control load, number of measurements are restricted per TXB. Maximum number of measurements are 10 % of the maximum number of CEs per TXB. Number of samples in the range 38..39 dBm

© Copyright IBM Corp. 2008, 2009. All Rights Reserved.

Data Source

NodeB_RNC_RXI

Source Field

pmDpchCodePowerSf256

Source Section

RadioLinks

pmDpchCodePwrSf256P5MD_34

The average transmitted code power on a DPCH channel for spreading factor 256. In order to control load, number of measurements are restricted per TXB. Maximum number of measurements are 10 % of the maximum number of CEs per TXB. Number of samples in the range 39..40 dBm

Data Source

NodeB_RNC_RXI

Source Field

pmDpchCodePowerSf256

Source Section

RadioLinks

pmDpchCodePwrSf256P5MD_35

The average transmitted code power on a DPCH channel for spreading factor 256. In order to control load, number of measurements are restricted per TXB. Maximum number of measurements are 10 % of the maximum number of CEs per TXB. Number of samples in the range 40..41 dBm

Data Source

NodeB_RNC_RXI

Source Field

pmDpchCodePowerSf256

Source Section

RadioLinks

pmDpchCodePwrSf256P5MD_36

The average transmitted code power on a DPCH channel for spreading factor 256. In order to control load, number of measurements are restricted per TXB. Maximum number of measurements are 10 % of the maximum number of CEs per TXB. Number of samples in the range 41..42 dBm

Data Source

NodeB_RNC_RXI

Source Field

pmDpchCodePowerSf256

Source Section

RadioLinks

pmDpchCodePwrSf256P5MD_37

The average transmitted code power on a DPCH channel for spreading factor 256. In order to control load, number of measurements are restricted per TXB. Maximum number of measurements are 10 % of the maximum number of CEs per TXB. Number of samples in the range 42..43 dBm

Data Source

NodeB_RNC_RXI

Source Field

pmDpchCodePowerSf256

Source Section

RadioLinks

pmDpchCodePwrSf32P5MD_00

The average transmitted code power on a DPCH channel for spreading factor 32. In order to control load, number of measurements are restricted per TXB. Maximum number of measurements are 10 % of the maximum number of CEs per TXB. Number of samples in the range MIN_VALUE..6dBm

Data Source

NodeB_RNC_RXI

© Copyright IBM Corp. 2008, 2009. All Rights Reserved.

Source Field

pmDpchCodePowerSf32

Source Section

RadioLinks

pmDpchCodePwrSf32P5MD_01

The average transmitted code power on a DPCH channel for spreading factor 32. In order to control load, number of measurements are restricted per TXB. Maximum number of measurements are 10 % of the maximum number of CEs per TXB. Number of samples in the range 6..7 dBm

Data Source

NodeB_RNC_RXI

Source Field

pmDpchCodePowerSf32

Source Section

RadioLinks

pmDpchCodePwrSf32P5MD_02

The average transmitted code power on a DPCH channel for spreading factor 32. In order to control load, number of measurements are restricted per TXB. Maximum number of measurements are 10 % of the maximum number of CEs per TXB. Number of samples in the range 7..8 dBm

Data Source

NodeB_RNC_RXI

Source Field

pmDpchCodePowerSf32

Source Section

RadioLinks

pmDpchCodePwrSf32P5MD_03

The average transmitted code power on a DPCH channel for spreading factor 32. In order to control load, number of measurements are restricted per TXB. Maximum number of

measurements are 10 % of the maximum number of CEs per TXB. Number of samples in the range 8..9 dBm

Data Source

NodeB_RNC_RXI

Source Field

pmDpchCodePowerSf32

Source Section

RadioLinks

pmDpchCodePwrSf32P5MD_04

The average transmitted code power on a DPCH channel for spreading factor 32. In order to control load, number of measurements are restricted per TXB. Maximum number of measurements are 10 % of the maximum number of CEs per TXB. Number of samples in the range 9..10 dBm

Data Source

NodeB_RNC_RXI

Source Field

pmDpchCodePowerSf32

Source Section

RadioLinks

pmDpchCodePwrSf32P5MD_05

The average transmitted code power on a DPCH channel for spreading factor 32. In order to control load, number of measurements are restricted per TXB. Maximum number of measurements are 10 % of the maximum number of CEs per TXB. Number of samples in the range 10..11 dBm

Data Source

NodeB_RNC_RXI

Source Field

pmDpchCodePowerSf32

© Copyright IBM Corp. 2008, 2009. All Rights Reserved.

Source Section

RadioLinks

pmDpchCodePwrSf32P5MD_06

The average transmitted code power on a DPCH channel for spreading factor 32. In order to control load, number of measurements are restricted per TXB. Maximum number of measurements are 10 % of the maximum number of CEs per TXB. Number of samples in the range 11..12 dBm

Data Source

NodeB_RNC_RXI

Source Field

pmDpchCodePowerSf32

Source Section

RadioLinks

pmDpchCodePwrSf32P5MD_07

The average transmitted code power on a DPCH channel for spreading factor 32. In order to control load, number of measurements are restricted per TXB. Maximum number of measurements are 10 % of the maximum number of CEs per TXB. Number of samples in the range 12..13 dBm

Data Source

NodeB_RNC_RXI

Source Field

pmDpchCodePowerSf32

Source Section

RadioLinks

pmDpchCodePwrSf32P5MD_08

The average transmitted code power on a DPCH channel for spreading factor 32. In order to control load, number of measurements are restricted per TXB. Maximum number of measurements are 10 % of the maximum number of CEs per TXB. Number of samples in the range 13..14 dBm

Data Source

NodeB_RNC_RXI

Source Field

pmDpchCodePowerSf32

Source Section

RadioLinks

pmDpchCodePwrSf32P5MD_09

The average transmitted code power on a DPCH channel for spreading factor 32. In order to control load, number of measurements are restricted per TXB. Maximum number of measurements are 10 % of the maximum number of CEs per TXB. Number of samples in the range 14..15 dBm

Data Source

NodeB_RNC_RXI

Source Field

pmDpchCodePowerSf32

Source Section

RadioLinks

pmDpchCodePwrSf32P5MD_10

The average transmitted code power on a DPCH channel for spreading factor 32. In order to control load, number of measurements are restricted per TXB. Maximum number of measurements are 10 % of the maximum number of CEs per TXB. Number of samples in the range 15..16 dBm

Data Source

NodeB_RNC_RXI

Source Field

pmDpchCodePowerSf32

Source Section

RadioLinks

© Copyright IBM Corp. 2008, 2009. All Rights Reserved.

pmDpchCodePwrSf32P5MD_11

The average transmitted code power on a DPCH channel for spreading factor 32. In order to control load, number of measurements are restricted per TXB. Maximum number of measurements are 10 % of the maximum number of CEs per TXB. Number of samples in the range 16..17 dBm

Data Source

NodeB_RNC_RXI

Source Field

pmDpchCodePowerSf32

Source Section

RadioLinks

pmDpchCodePwrSf32P5MD_12

The average transmitted code power on a DPCH channel for spreading factor 32. In order to control load, number of measurements are restricted per TXB. Maximum number of measurements are 10 % of the maximum number of CEs per TXB. Number of samples in the range 17..18 dBm

Data Source

NodeB_RNC_RXI

Source Field

pmDpchCodePowerSf32

Source Section

RadioLinks

pmDpchCodePwrSf32P5MD_13

The average transmitted code power on a DPCH channel for spreading factor 32. In order to control load, number of measurements are restricted per TXB. Maximum number of measurements are 10 % of the maximum number of CEs per TXB. Number of samples in the range 18..19 dBm

Data Source

NodeB_RNC_RXI

Source Field

pmDpchCodePowerSf32

Source Section

RadioLinks

pmDpchCodePwrSf32P5MD_14

The average transmitted code power on a DPCH channel for spreading factor 32. In order to control load, number of measurements are restricted per TXB. Maximum number of measurements are 10 % of the maximum number of CEs per TXB. Number of samples in the range 19..20 dBm

Data Source

NodeB_RNC_RXI

Source Field

pmDpchCodePowerSf32

Source Section

RadioLinks

pmDpchCodePwrSf32P5MD_15

The average transmitted code power on a DPCH channel for spreading factor 32. In order to control load, number of measurements are restricted per TXB. Maximum number of measurements are 10 % of the maximum number of CEs per TXB. Number of samples in the range 20..21 dBm

Data Source

NodeB_RNC_RXI

Source Field

pmDpchCodePowerSf32

Source Section

RadioLinks

pmDpchCodePwrSf32P5MD_16

The average transmitted code power on a DPCH channel for spreading factor 32. In order to control load, number of measurements are restricted per TXB. Maximum number of

© Copyright IBM Corp. 2008, 2009. All Rights Reserved.

measurements are 10 % of the maximum number of CEs per TXB. Number of samples in the range 21..22 dBm

Data Source

NodeB_RNC_RXI

Source Field

pmDpchCodePowerSf32

Source Section

RadioLinks

pmDpchCodePwrSf32P5MD_17

The average transmitted code power on a DPCH channel for spreading factor 32. In order to control load, number of measurements are restricted per TXB. Maximum number of measurements are 10 % of the maximum number of CEs per TXB. Number of samples in the range 22..23 dBm

Data Source

NodeB_RNC_RXI

Source Field

pmDpchCodePowerSf32

Source Section

RadioLinks

pmDpchCodePwrSf32P5MD_18

The average transmitted code power on a DPCH channel for spreading factor 32. In order to control load, number of measurements are restricted per TXB. Maximum number of measurements are 10 % of the maximum number of CEs per TXB. Number of samples in the range 23..24 dBm

Data Source

NodeB_RNC_RXI

Source Field

pmDpchCodePowerSf32

Source Section

RadioLinks

pmDpchCodePwrSf32P5MD_19

The average transmitted code power on a DPCH channel for spreading factor 32. In order to control load, number of measurements are restricted per TXB. Maximum number of measurements are 10 % of the maximum number of CEs per TXB. Number of samples in the range 24..25 dBm

Data Source

NodeB_RNC_RXI

Source Field

pmDpchCodePowerSf32

Source Section

RadioLinks

pmDpchCodePwrSf32P5MD_20

The average transmitted code power on a DPCH channel for spreading factor 32. In order to control load, number of measurements are restricted per TXB. Maximum number of measurements are 10 % of the maximum number of CEs per TXB. Number of samples in the range 25..26 dBm

Data Source

NodeB_RNC_RXI

Source Field

pmDpchCodePowerSf32

Source Section

RadioLinks

pmDpchCodePwrSf32P5MD_21

The average transmitted code power on a DPCH channel for spreading factor 32. In order to control load, number of measurements are restricted per TXB. Maximum number of measurements are 10 % of the maximum number of CEs per TXB. Number of samples in the range 26..27 dBm

© Copyright IBM Corp. 2008, 2009. All Rights Reserved.

Data Source

NodeB_RNC_RXI

Source Field

pmDpchCodePowerSf32

Source Section

RadioLinks

pmDpchCodePwrSf32P5MD_22

The average transmitted code power on a DPCH channel for spreading factor 32. In order to control load, number of measurements are restricted per TXB. Maximum number of measurements are 10 % of the maximum number of CEs per TXB. Number of samples in the range 27..28 dBm

Data Source

NodeB_RNC_RXI

Source Field

pmDpchCodePowerSf32

Source Section

RadioLinks

pmDpchCodePwrSf32P5MD_23

The average transmitted code power on a DPCH channel for spreading factor 32. In order to control load, number of measurements are restricted per TXB. Maximum number of measurements are 10 % of the maximum number of CEs per TXB. Number of samples in the range 28..29 dBm

Data Source

NodeB_RNC_RXI

Source Field

pmDpchCodePowerSf32

Source Section

RadioLinks

pmDpchCodePwrSf32P5MD_24

The average transmitted code power on a DPCH channel for spreading factor 32. In order to control load, number of measurements are restricted per TXB. Maximum number of measurements are 10 % of the maximum number of CEs per TXB. Number of samples in the range 29..30 dBm

Data Source

NodeB_RNC_RXI

Source Field

pmDpchCodePowerSf32

Source Section

RadioLinks

pmDpchCodePwrSf32P5MD_25

The average transmitted code power on a DPCH channel for spreading factor 32. In order to control load, number of measurements are restricted per TXB. Maximum number of measurements are 10 % of the maximum number of CEs per TXB. Number of samples in the range 30..31 dBm

Data Source

NodeB_RNC_RXI

Source Field

pmDpchCodePowerSf32

Source Section

RadioLinks

pmDpchCodePwrSf32P5MD_26

The average transmitted code power on a DPCH channel for spreading factor 32. In order to control load, number of measurements are restricted per TXB. Maximum number of measurements are 10 % of the maximum number of CEs per TXB. Number of samples in the range 31..32 dBm

Data Source

NodeB_RNC_RXI

© Copyright IBM Corp. 2008, 2009. All Rights Reserved.

Source Field

pmDpchCodePowerSf32

Source Section

RadioLinks

pmDpchCodePwrSf32P5MD_27

The average transmitted code power on a DPCH channel for spreading factor 32. In order to control load, number of measurements are restricted per TXB. Maximum number of measurements are 10 % of the maximum number of CEs per TXB. Number of samples in the range 32..33 dBm

Data Source

NodeB_RNC_RXI

Source Field

pmDpchCodePowerSf32

Source Section

RadioLinks

pmDpchCodePwrSf32P5MD_28

The average transmitted code power on a DPCH channel for spreading factor 32. In order to control load, number of measurements are restricted per TXB. Maximum number of measurements are 10 % of the maximum number of CEs per TXB. Number of samples in the range 33..34 dBm

Data Source

NodeB_RNC_RXI

Source Field

pmDpchCodePowerSf32

Source Section

RadioLinks

pmDpchCodePwrSf32P5MD_29

The average transmitted code power on a DPCH channel for spreading factor 32. In order to control load, number of measurements are restricted per TXB. Maximum number of

measurements are 10 % of the maximum number of CEs per TXB. Number of samples in the range 34..35 dBm

Data Source

NodeB_RNC_RXI

Source Field

pmDpchCodePowerSf32

Source Section

RadioLinks

pmDpchCodePwrSf32P5MD_30

The average transmitted code power on a DPCH channel for spreading factor 32. In order to control load, number of measurements are restricted per TXB. Maximum number of measurements are 10 % of the maximum number of CEs per TXB. Number of samples in the range 35..36 dBm

Data Source

NodeB_RNC_RXI

Source Field

pmDpchCodePowerSf32

Source Section

RadioLinks

pmDpchCodePwrSf32P5MD_31

The average transmitted code power on a DPCH channel for spreading factor 32. In order to control load, number of measurements are restricted per TXB. Maximum number of measurements are 10 % of the maximum number of CEs per TXB. Number of samples in the range 36..37 dBm

Data Source

NodeB_RNC_RXI

Source Field

pmDpchCodePowerSf32

© Copyright IBM Corp. 2008, 2009. All Rights Reserved.

Source Section

RadioLinks

pmDpchCodePwrSf32P5MD_32

The average transmitted code power on a DPCH channel for spreading factor 32. In order to control load, number of measurements are restricted per TXB. Maximum number of measurements are 10 % of the maximum number of CEs per TXB. Number of samples in the range 37..38 dBm

Data Source

NodeB_RNC_RXI

Source Field

pmDpchCodePowerSf32

Source Section

RadioLinks

pmDpchCodePwrSf32P5MD_33

The average transmitted code power on a DPCH channel for spreading factor 32. In order to control load, number of measurements are restricted per TXB. Maximum number of measurements are 10 % of the maximum number of CEs per TXB. Number of samples in the range 38..39 dBm

Data Source

NodeB_RNC_RXI

Source Field

pmDpchCodePowerSf32

Source Section

RadioLinks

pmDpchCodePwrSf32P5MD_34

The average transmitted code power on a DPCH channel for spreading factor 32. In order to control load, number of measurements are restricted per TXB. Maximum number of measurements are 10 % of the maximum number of CEs per TXB. Number of samples in the range 39..40 dBm

Data Source

NodeB_RNC_RXI

Source Field

pmDpchCodePowerSf32

Source Section

RadioLinks

pmDpchCodePwrSf32P5MD_35

The average transmitted code power on a DPCH channel for spreading factor 32. In order to control load, number of measurements are restricted per TXB. Maximum number of measurements are 10 % of the maximum number of CEs per TXB. Number of samples in the range 40..41 dBm

Data Source

NodeB_RNC_RXI

Source Field

pmDpchCodePowerSf32

Source Section

RadioLinks

pmDpchCodePwrSf32P5MD_36

The average transmitted code power on a DPCH channel for spreading factor 32. In order to control load, number of measurements are restricted per TXB. Maximum number of measurements are 10 % of the maximum number of CEs per TXB. Number of samples in the range 41..42 dBm

Data Source

NodeB_RNC_RXI

Source Field

pmDpchCodePowerSf32

Source Section

RadioLinks

© Copyright IBM Corp. 2008, 2009. All Rights Reserved.

pmDpchCodePwrSf32P5MD_37

The average transmitted code power on a DPCH channel for spreading factor 32. In order to control load, number of measurements are restricted per TXB. Maximum number of measurements are 10 % of the maximum number of CEs per TXB. Number of samples in the range 42..43 dBm

Data Source

NodeB_RNC_RXI

Source Field

pmDpchCodePowerSf32

Source Section

RadioLinks

pmDpchCodePwrSf4P5MD_00

The average transmitted code power on a DPCH channel for spreading factor 4. In order to control load, number of measurements are restricted per TXB. Maximum number of measurements are 10 % of the maximum number of CEs per TXB. Number of samples in the range MIN_VALUE..6dBm

Data Source

NodeB_RNC_RXI

Source Field

pmDpchCodePowerSf4

Source Section

RadioLinks

pmDpchCodePwrSf4P5MD_01

The average transmitted code power on a DPCH channel for spreading factor 4. In order to control load, number of measurements are restricted per TXB. Maximum number of measurements are 10 % of the maximum number of CEs per TXB. Number of samples in the range 6..7 dBm

Data Source

NodeB_RNC_RXI

Source Field

pmDpchCodePowerSf4

Source Section

RadioLinks

pmDpchCodePwrSf4P5MD_02

The average transmitted code power on a DPCH channel for spreading factor 4. In order to control load, number of measurements are restricted per TXB. Maximum number of measurements are 10 % of the maximum number of CEs per TXB. Number of samples in the range 7..8 dBm

Data Source

NodeB_RNC_RXI

Source Field

pmDpchCodePowerSf4

Source Section

RadioLinks

pmDpchCodePwrSf4P5MD_03

The average transmitted code power on a DPCH channel for spreading factor 4. In order to control load, number of measurements are restricted per TXB. Maximum number of measurements are 10 % of the maximum number of CEs per TXB. Number of samples in the range 8..9 dBm

Data Source

NodeB_RNC_RXI

Source Field

pmDpchCodePowerSf4

Source Section

RadioLinks

pmDpchCodePwrSf4P5MD_04

The average transmitted code power on a DPCH channel for spreading factor 4. In order to control load, number of measurements are restricted per TXB. Maximum number of

© Copyright IBM Corp. 2008, 2009. All Rights Reserved.

measurements are 10 % of the maximum number of CEs per TXB. Number of samples in the range 9..10 dBm

Data Source

NodeB_RNC_RXI

Source Field

pmDpchCodePowerSf4

Source Section

RadioLinks

pmDpchCodePwrSf4P5MD_05

The average transmitted code power on a DPCH channel for spreading factor 4. In order to control load, number of measurements are restricted per TXB. Maximum number of measurements are 10 % of the maximum number of CEs per TXB. Number of samples in the range 10..11 dBm

Data Source

NodeB_RNC_RXI

Source Field

pmDpchCodePowerSf4

Source Section

RadioLinks

pmDpchCodePwrSf4P5MD_06

The average transmitted code power on a DPCH channel for spreading factor 4. In order to control load, number of measurements are restricted per TXB. Maximum number of measurements are 10 % of the maximum number of CEs per TXB. Number of samples in the range 11..12 dBm

Data Source

NodeB_RNC_RXI

Source Field

pmDpchCodePowerSf4

Source Section

RadioLinks

pmDpchCodePwrSf4P5MD_07

The average transmitted code power on a DPCH channel for spreading factor 4. In order to control load, number of measurements are restricted per TXB. Maximum number of measurements are 10 % of the maximum number of CEs per TXB. Number of samples in the range 12..13 dBm

Data Source

NodeB_RNC_RXI

Source Field

pmDpchCodePowerSf4

Source Section

RadioLinks

pmDpchCodePwrSf4P5MD_08

The average transmitted code power on a DPCH channel for spreading factor 4. In order to control load, number of measurements are restricted per TXB. Maximum number of measurements are 10 % of the maximum number of CEs per TXB. Number of samples in the range 13..14 dBm

Data Source

NodeB_RNC_RXI

Source Field

pmDpchCodePowerSf4

Source Section

RadioLinks

pmDpchCodePwrSf4P5MD_09

The average transmitted code power on a DPCH channel for spreading factor 4. In order to control load, number of measurements are restricted per TXB. Maximum number of measurements are 10 % of the maximum number of CEs per TXB. Number of samples in the range 14..15 dBm

© Copyright IBM Corp. 2008, 2009. All Rights Reserved.

Data Source

NodeB_RNC_RXI

Source Field

pmDpchCodePowerSf4

Source Section

RadioLinks

pmDpchCodePwrSf4P5MD_10

The average transmitted code power on a DPCH channel for spreading factor 4. In order to control load, number of measurements are restricted per TXB. Maximum number of measurements are 10 % of the maximum number of CEs per TXB. Number of samples in the range 15..16 dBm

Data Source

NodeB_RNC_RXI

Source Field

pmDpchCodePowerSf4

Source Section

RadioLinks

pmDpchCodePwrSf4P5MD_11

The average transmitted code power on a DPCH channel for spreading factor 4. In order to control load, number of measurements are restricted per TXB. Maximum number of measurements are 10 % of the maximum number of CEs per TXB. Number of samples in the range 16..17 dBm

Data Source

NodeB_RNC_RXI

Source Field

pmDpchCodePowerSf4

Source Section

RadioLinks

pmDpchCodePwrSf4P5MD_12

The average transmitted code power on a DPCH channel for spreading factor 4. In order to control load, number of measurements are restricted per TXB. Maximum number of measurements are 10 % of the maximum number of CEs per TXB. Number of samples in the range 17..18 dBm

Data Source

NodeB_RNC_RXI

Source Field

pmDpchCodePowerSf4

Source Section

RadioLinks

pmDpchCodePwrSf4P5MD_13

The average transmitted code power on a DPCH channel for spreading factor 4. In order to control load, number of measurements are restricted per TXB. Maximum number of measurements are 10 % of the maximum number of CEs per TXB. Number of samples in the range 18..19 dBm

Data Source

NodeB_RNC_RXI

Source Field

pmDpchCodePowerSf4

Source Section

RadioLinks

pmDpchCodePwrSf4P5MD_14

The average transmitted code power on a DPCH channel for spreading factor 4. In order to control load, number of measurements are restricted per TXB. Maximum number of measurements are 10 % of the maximum number of CEs per TXB. Number of samples in the range 19..20 dBm

Data Source

NodeB_RNC_RXI

© Copyright IBM Corp. 2008, 2009. All Rights Reserved.

Source Field

pmDpchCodePowerSf4

Source Section

RadioLinks

pmDpchCodePwrSf4P5MD_15

The average transmitted code power on a DPCH channel for spreading factor 4. In order to control load, number of measurements are restricted per TXB. Maximum number of measurements are 10 % of the maximum number of CEs per TXB. Number of samples in the range 20..21 dBm

Data Source

NodeB_RNC_RXI

Source Field

pmDpchCodePowerSf4

Source Section

RadioLinks

pmDpchCodePwrSf4P5MD_16

The average transmitted code power on a DPCH channel for spreading factor 4. In order to control load, number of measurements are restricted per TXB. Maximum number of measurements are 10 % of the maximum number of CEs per TXB. Number of samples in the range 21..22 dBm

Data Source

NodeB_RNC_RXI

Source Field

pmDpchCodePowerSf4

Source Section

RadioLinks

pmDpchCodePwrSf4P5MD_17

The average transmitted code power on a DPCH channel for spreading factor 4. In order to control load, number of measurements are restricted per TXB. Maximum number of

measurements are 10 % of the maximum number of CEs per TXB. Number of samples in the range 22..23 dBm

Data Source

NodeB_RNC_RXI

Source Field

pmDpchCodePowerSf4

Source Section

RadioLinks

pmDpchCodePwrSf4P5MD_18

The average transmitted code power on a DPCH channel for spreading factor 4. In order to control load, number of measurements are restricted per TXB. Maximum number of measurements are 10 % of the maximum number of CEs per TXB. Number of samples in the range 23..24 dBm

Data Source

NodeB_RNC_RXI

Source Field

pmDpchCodePowerSf4

Source Section

RadioLinks

pmDpchCodePwrSf4P5MD_19

The average transmitted code power on a DPCH channel for spreading factor 4. In order to control load, number of measurements are restricted per TXB. Maximum number of measurements are 10 % of the maximum number of CEs per TXB. Number of samples in the range 24..25 dBm

Data Source

NodeB_RNC_RXI

Source Field

pmDpchCodePowerSf4

© Copyright IBM Corp. 2008, 2009. All Rights Reserved.

Source Section

RadioLinks

pmDpchCodePwrSf4P5MD_20

The average transmitted code power on a DPCH channel for spreading factor 4. In order to control load, number of measurements are restricted per TXB. Maximum number of measurements are 10 % of the maximum number of CEs per TXB. Number of samples in the range 25..26 dBm

Data Source

NodeB_RNC_RXI

Source Field

pmDpchCodePowerSf4

Source Section

RadioLinks

pmDpchCodePwrSf4P5MD_21

The average transmitted code power on a DPCH channel for spreading factor 4. In order to control load, number of measurements are restricted per TXB. Maximum number of measurements are 10 % of the maximum number of CEs per TXB. Number of samples in the range 26..27 dBm

Data Source

NodeB_RNC_RXI

Source Field

pmDpchCodePowerSf4

Source Section

RadioLinks

pmDpchCodePwrSf4P5MD_22

The average transmitted code power on a DPCH channel for spreading factor 4. In order to control load, number of measurements are restricted per TXB. Maximum number of measurements are 10 % of the maximum number of CEs per TXB. Number of samples in the range 27..28 dBm

Data Source

NodeB_RNC_RXI

Source Field

pmDpchCodePowerSf4

Source Section

RadioLinks

pmDpchCodePwrSf4P5MD_23

The average transmitted code power on a DPCH channel for spreading factor 4. In order to control load, number of measurements are restricted per TXB. Maximum number of measurements are 10 % of the maximum number of CEs per TXB. Number of samples in the range 28..29 dBm

Data Source

NodeB_RNC_RXI

Source Field

pmDpchCodePowerSf4

Source Section

RadioLinks

pmDpchCodePwrSf4P5MD_24

The average transmitted code power on a DPCH channel for spreading factor 4. In order to control load, number of measurements are restricted per TXB. Maximum number of measurements are 10 % of the maximum number of CEs per TXB. Number of samples in the range 29..30 dBm

Data Source

NodeB_RNC_RXI

Source Field

pmDpchCodePowerSf4

Source Section

RadioLinks

© Copyright IBM Corp. 2008, 2009. All Rights Reserved.

pmDpchCodePwrSf4P5MD_25

The average transmitted code power on a DPCH channel for spreading factor 4. In order to control load, number of measurements are restricted per TXB. Maximum number of measurements are 10 % of the maximum number of CEs per TXB. Number of samples in the range 30..31 dBm

Data Source

NodeB_RNC_RXI

Source Field

pmDpchCodePowerSf4

Source Section

RadioLinks

pmDpchCodePwrSf4P5MD_26

The average transmitted code power on a DPCH channel for spreading factor 4. In order to control load, number of measurements are restricted per TXB. Maximum number of measurements are 10 % of the maximum number of CEs per TXB. Number of samples in the range 31..32 dBm

Data Source

NodeB_RNC_RXI

Source Field

pmDpchCodePowerSf4

Source Section

RadioLinks

pmDpchCodePwrSf4P5MD_27

The average transmitted code power on a DPCH channel for spreading factor 4. In order to control load, number of measurements are restricted per TXB. Maximum number of measurements are 10 % of the maximum number of CEs per TXB. Number of samples in the range 32..33 dBm

Data Source

NodeB_RNC_RXI

Source Field

pmDpchCodePowerSf4

Source Section

RadioLinks

pmDpchCodePwrSf4P5MD_28

The average transmitted code power on a DPCH channel for spreading factor 4. In order to control load, number of measurements are restricted per TXB. Maximum number of measurements are 10 % of the maximum number of CEs per TXB. Number of samples in the range 33..34 dBm

Data Source

NodeB_RNC_RXI

Source Field

pmDpchCodePowerSf4

Source Section

RadioLinks

pmDpchCodePwrSf4P5MD_29

The average transmitted code power on a DPCH channel for spreading factor 4. In order to control load, number of measurements are restricted per TXB. Maximum number of measurements are 10 % of the maximum number of CEs per TXB. Number of samples in the range 34..35 dBm

Data Source

NodeB_RNC_RXI

Source Field

pmDpchCodePowerSf4

Source Section

RadioLinks

pmDpchCodePwrSf4P5MD_30

The average transmitted code power on a DPCH channel for spreading factor 4. In order to control load, number of measurements are restricted per TXB. Maximum number of

© Copyright IBM Corp. 2008, 2009. All Rights Reserved.

measurements are 10 % of the maximum number of CEs per TXB. Number of samples in the range 35..36 dBm

Data Source

NodeB_RNC_RXI

Source Field

pmDpchCodePowerSf4

Source Section

RadioLinks

pmDpchCodePwrSf4P5MD_31

The average transmitted code power on a DPCH channel for spreading factor 4. In order to control load, number of measurements are restricted per TXB. Maximum number of measurements are 10 % of the maximum number of CEs per TXB. Number of samples in the range 36..37 dBm

Data Source

NodeB_RNC_RXI

Source Field

pmDpchCodePowerSf4

Source Section

RadioLinks

pmDpchCodePwrSf4P5MD_32

The average transmitted code power on a DPCH channel for spreading factor 4. In order to control load, number of measurements are restricted per TXB. Maximum number of measurements are 10 % of the maximum number of CEs per TXB. Number of samples in the range 37..38 dBm

Data Source

NodeB_RNC_RXI

Source Field

pmDpchCodePowerSf4

Source Section

RadioLinks

pmDpchCodePwrSf4P5MD_33

The average transmitted code power on a DPCH channel for spreading factor 4. In order to control load, number of measurements are restricted per TXB. Maximum number of measurements are 10 % of the maximum number of CEs per TXB. Number of samples in the range 38..39 dBm

Data Source

NodeB_RNC_RXI

Source Field

pmDpchCodePowerSf4

Source Section

RadioLinks

pmDpchCodePwrSf4P5MD_34

The average transmitted code power on a DPCH channel for spreading factor 4. In order to control load, number of measurements are restricted per TXB. Maximum number of measurements are 10 % of the maximum number of CEs per TXB. Number of samples in the range 39..40 dBm

Data Source

NodeB_RNC_RXI

Source Field

pmDpchCodePowerSf4

Source Section

RadioLinks

pmDpchCodePwrSf4P5MD_35

The average transmitted code power on a DPCH channel for spreading factor 4. In order to control load, number of measurements are restricted per TXB. Maximum number of measurements are 10 % of the maximum number of CEs per TXB. Number of samples in the range 40..41 dBm

© Copyright IBM Corp. 2008, 2009. All Rights Reserved.

Data Source

NodeB_RNC_RXI

Source Field

pmDpchCodePowerSf4

Source Section

RadioLinks

pmDpchCodePwrSf4P5MD_36

The average transmitted code power on a DPCH channel for spreading factor 4. In order to control load, number of measurements are restricted per TXB. Maximum number of measurements are 10 % of the maximum number of CEs per TXB. Number of samples in the range 41..42 dBm

Data Source

NodeB_RNC_RXI

Source Field

pmDpchCodePowerSf4

Source Section

RadioLinks

pmDpchCodePwrSf4P5MD_37

The average transmitted code power on a DPCH channel for spreading factor 4. In order to control load, number of measurements are restricted per TXB. Maximum number of measurements are 10 % of the maximum number of CEs per TXB. Number of samples in the range 42..43 dBm

Data Source

NodeB_RNC_RXI

Source Field

pmDpchCodePowerSf4

Source Section

RadioLinks

pmDpchCodePwrSf64P5MD_00

The average transmitted code power on a DPCH channel for spreading factor 64. In order to control load, number of measurements are restricted per TXB. Maximum number of measurements are 10 % of the maximum number of CEs per TXB. Number of samples in the range MIN_VALUE..6dBm

Data Source

NodeB_RNC_RXI

Source Field

pmDpchCodePowerSf64

Source Section

RadioLinks

pmDpchCodePwrSf64P5MD_01

The average transmitted code power on a DPCH channel for spreading factor 64. In order to control load, number of measurements are restricted per TXB. Maximum number of measurements are 10 % of the maximum number of CEs per TXB. Number of samples in the range 6..7 dBm

Data Source

NodeB_RNC_RXI

Source Field

pmDpchCodePowerSf64

Source Section

RadioLinks

pmDpchCodePwrSf64P5MD_02

The average transmitted code power on a DPCH channel for spreading factor 64. In order to control load, number of measurements are restricted per TXB. Maximum number of measurements are 10 % of the maximum number of CEs per TXB. Number of samples in the range 7..8 dBm

Data Source

NodeB_RNC_RXI

© Copyright IBM Corp. 2008, 2009. All Rights Reserved.

Source Field

pmDpchCodePowerSf64

Source Section

RadioLinks

pmDpchCodePwrSf64P5MD_03

The average transmitted code power on a DPCH channel for spreading factor 64. In order to control load, number of measurements are restricted per TXB. Maximum number of measurements are 10 % of the maximum number of CEs per TXB. Number of samples in the range 8..9 dBm

Data Source

NodeB_RNC_RXI

Source Field

pmDpchCodePowerSf64

Source Section

RadioLinks

pmDpchCodePwrSf64P5MD_04

The average transmitted code power on a DPCH channel for spreading factor 64. In order to control load, number of measurements are restricted per TXB. Maximum number of measurements are 10 % of the maximum number of CEs per TXB. Number of samples in the range 9..10 dBm

Data Source

NodeB_RNC_RXI

Source Field

pmDpchCodePowerSf64

Source Section

RadioLinks

pmDpchCodePwrSf64P5MD_05

The average transmitted code power on a DPCH channel for spreading factor 64. In order to control load, number of measurements are restricted per TXB. Maximum number of

measurements are 10 % of the maximum number of CEs per TXB. Number of samples in the range 10..11 dBm

Data Source

NodeB_RNC_RXI

Source Field

pmDpchCodePowerSf64

Source Section

RadioLinks

pmDpchCodePwrSf64P5MD_06

The average transmitted code power on a DPCH channel for spreading factor 64. In order to control load, number of measurements are restricted per TXB. Maximum number of measurements are 10 % of the maximum number of CEs per TXB. Number of samples in the range 11..12 dBm

Data Source

NodeB_RNC_RXI

Source Field

pmDpchCodePowerSf64

Source Section

RadioLinks

pmDpchCodePwrSf64P5MD_07

The average transmitted code power on a DPCH channel for spreading factor 64. In order to control load, number of measurements are restricted per TXB. Maximum number of measurements are 10 % of the maximum number of CEs per TXB. Number of samples in the range 12..13 dBm

Data Source

NodeB_RNC_RXI

Source Field

pmDpchCodePowerSf64

© Copyright IBM Corp. 2008, 2009. All Rights Reserved.

Source Section

RadioLinks

pmDpchCodePwrSf64P5MD_08

The average transmitted code power on a DPCH channel for spreading factor 64. In order to control load, number of measurements are restricted per TXB. Maximum number of measurements are 10 % of the maximum number of CEs per TXB. Number of samples in the range 13..14 dBm

Data Source

NodeB_RNC_RXI

Source Field

pmDpchCodePowerSf64

Source Section

RadioLinks

pmDpchCodePwrSf64P5MD_09

The average transmitted code power on a DPCH channel for spreading factor 64. In order to control load, number of measurements are restricted per TXB. Maximum number of measurements are 10 % of the maximum number of CEs per TXB. Number of samples in the range 14..15 dBm

Data Source

NodeB_RNC_RXI

Source Field

pmDpchCodePowerSf64

Source Section

RadioLinks

pmDpchCodePwrSf64P5MD_10

The average transmitted code power on a DPCH channel for spreading factor 64. In order to control load, number of measurements are restricted per TXB. Maximum number of measurements are 10 % of the maximum number of CEs per TXB. Number of samples in the range 15..16 dBm

Data Source

NodeB_RNC_RXI

Source Field

pmDpchCodePowerSf64

Source Section

RadioLinks

pmDpchCodePwrSf64P5MD_11

The average transmitted code power on a DPCH channel for spreading factor 64. In order to control load, number of measurements are restricted per TXB. Maximum number of measurements are 10 % of the maximum number of CEs per TXB. Number of samples in the range 16..17 dBm

Data Source

NodeB_RNC_RXI

Source Field

pmDpchCodePowerSf64

Source Section

RadioLinks

pmDpchCodePwrSf64P5MD_12

The average transmitted code power on a DPCH channel for spreading factor 64. In order to control load, number of measurements are restricted per TXB. Maximum number of measurements are 10 % of the maximum number of CEs per TXB. Number of samples in the range 17..18 dBm

Data Source

NodeB_RNC_RXI

Source Field

pmDpchCodePowerSf64

Source Section

RadioLinks

© Copyright IBM Corp. 2008, 2009. All Rights Reserved.

pmDpchCodePwrSf64P5MD_13

The average transmitted code power on a DPCH channel for spreading factor 64. In order to control load, number of measurements are restricted per TXB. Maximum number of measurements are 10 % of the maximum number of CEs per TXB. Number of samples in the range 18..19 dBm

Data Source

NodeB_RNC_RXI

Source Field

pmDpchCodePowerSf64

Source Section

RadioLinks

pmDpchCodePwrSf64P5MD_14

The average transmitted code power on a DPCH channel for spreading factor 64. In order to control load, number of measurements are restricted per TXB. Maximum number of measurements are 10 % of the maximum number of CEs per TXB. Number of samples in the range 19..20 dBm

Data Source

NodeB_RNC_RXI

Source Field

pmDpchCodePowerSf64

Source Section

RadioLinks

pmDpchCodePwrSf64P5MD_15

The average transmitted code power on a DPCH channel for spreading factor 64. In order to control load, number of measurements are restricted per TXB. Maximum number of measurements are 10 % of the maximum number of CEs per TXB. Number of samples in the range 20..21 dBm

Data Source

NodeB_RNC_RXI

Source Field

pmDpchCodePowerSf64

Source Section

RadioLinks

pmDpchCodePwrSf64P5MD_16

The average transmitted code power on a DPCH channel for spreading factor 64. In order to control load, number of measurements are restricted per TXB. Maximum number of measurements are 10 % of the maximum number of CEs per TXB. Number of samples in the range 21..22 dBm

Data Source

NodeB_RNC_RXI

Source Field

pmDpchCodePowerSf64

Source Section

RadioLinks

pmDpchCodePwrSf64P5MD_17

The average transmitted code power on a DPCH channel for spreading factor 64. In order to control load, number of measurements are restricted per TXB. Maximum number of measurements are 10 % of the maximum number of CEs per TXB. Number of samples in the range 22..23 dBm

Data Source

NodeB_RNC_RXI

Source Field

pmDpchCodePowerSf64

Source Section

RadioLinks

pmDpchCodePwrSf64P5MD_18

The average transmitted code power on a DPCH channel for spreading factor 64. In order to control load, number of measurements are restricted per TXB. Maximum number of

© Copyright IBM Corp. 2008, 2009. All Rights Reserved.

measurements are 10 % of the maximum number of CEs per TXB. Number of samples in the range 23..24 dBm

Data Source

NodeB_RNC_RXI

Source Field

pmDpchCodePowerSf64

Source Section

RadioLinks

pmDpchCodePwrSf64P5MD_19

The average transmitted code power on a DPCH channel for spreading factor 64. In order to control load, number of measurements are restricted per TXB. Maximum number of measurements are 10 % of the maximum number of CEs per TXB. Number of samples in the range 24..25 dBm

Data Source

NodeB_RNC_RXI

Source Field

pmDpchCodePowerSf64

Source Section

RadioLinks

pmDpchCodePwrSf64P5MD_20

The average transmitted code power on a DPCH channel for spreading factor 64. In order to control load, number of measurements are restricted per TXB. Maximum number of measurements are 10 % of the maximum number of CEs per TXB. Number of samples in the range 25..26 dBm

Data Source

NodeB_RNC_RXI

Source Field

pmDpchCodePowerSf64

Source Section

RadioLinks

pmDpchCodePwrSf64P5MD_21

The average transmitted code power on a DPCH channel for spreading factor 64. In order to control load, number of measurements are restricted per TXB. Maximum number of measurements are 10 % of the maximum number of CEs per TXB. Number of samples in the range 26..27 dBm

Data Source

NodeB_RNC_RXI

Source Field

pmDpchCodePowerSf64

Source Section

RadioLinks

pmDpchCodePwrSf64P5MD_22

The average transmitted code power on a DPCH channel for spreading factor 64. In order to control load, number of measurements are restricted per TXB. Maximum number of measurements are 10 % of the maximum number of CEs per TXB. Number of samples in the range 27..28 dBm

Data Source

NodeB_RNC_RXI

Source Field

pmDpchCodePowerSf64

Source Section

RadioLinks

pmDpchCodePwrSf64P5MD_23

The average transmitted code power on a DPCH channel for spreading factor 64. In order to control load, number of measurements are restricted per TXB. Maximum number of measurements are 10 % of the maximum number of CEs per TXB. Number of samples in the range 28..29 dBm

© Copyright IBM Corp. 2008, 2009. All Rights Reserved.

Data Source

NodeB_RNC_RXI

Source Field

pmDpchCodePowerSf64

Source Section

RadioLinks

pmDpchCodePwrSf64P5MD_24

The average transmitted code power on a DPCH channel for spreading factor 64. In order to control load, number of measurements are restricted per TXB. Maximum number of measurements are 10 % of the maximum number of CEs per TXB. Number of samples in the range 29..30 dBm

Data Source

NodeB_RNC_RXI

Source Field

pmDpchCodePowerSf64

Source Section

RadioLinks

pmDpchCodePwrSf64P5MD_25

The average transmitted code power on a DPCH channel for spreading factor 64. In order to control load, number of measurements are restricted per TXB. Maximum number of measurements are 10 % of the maximum number of CEs per TXB. Number of samples in the range 30..31 dBm

Data Source

NodeB_RNC_RXI

Source Field

pmDpchCodePowerSf64

Source Section

RadioLinks

pmDpchCodePwrSf64P5MD_26

The average transmitted code power on a DPCH channel for spreading factor 64. In order to control load, number of measurements are restricted per TXB. Maximum number of measurements are 10 % of the maximum number of CEs per TXB. Number of samples in the range 31..32 dBm

Data Source

NodeB_RNC_RXI

Source Field

pmDpchCodePowerSf64

Source Section

RadioLinks

pmDpchCodePwrSf64P5MD_27

The average transmitted code power on a DPCH channel for spreading factor 64. In order to control load, number of measurements are restricted per TXB. Maximum number of measurements are 10 % of the maximum number of CEs per TXB. Number of samples in the range 32..33 dBm

Data Source

NodeB_RNC_RXI

Source Field

pmDpchCodePowerSf64

Source Section

RadioLinks

pmDpchCodePwrSf64P5MD_28

The average transmitted code power on a DPCH channel for spreading factor 64. In order to control load, number of measurements are restricted per TXB. Maximum number of measurements are 10 % of the maximum number of CEs per TXB. Number of samples in the range 33..34 dBm

Data Source

NodeB_RNC_RXI

© Copyright IBM Corp. 2008, 2009. All Rights Reserved.

Source Field

pmDpchCodePowerSf64

Source Section

RadioLinks

pmDpchCodePwrSf64P5MD_29

The average transmitted code power on a DPCH channel for spreading factor 64. In order to control load, number of measurements are restricted per TXB. Maximum number of measurements are 10 % of the maximum number of CEs per TXB. Number of samples in the range 34..35 dBm

Data Source

NodeB_RNC_RXI

Source Field

pmDpchCodePowerSf64

Source Section

RadioLinks

pmDpchCodePwrSf64P5MD_30

The average transmitted code power on a DPCH channel for spreading factor 64. In order to control load, number of measurements are restricted per TXB. Maximum number of measurements are 10 % of the maximum number of CEs per TXB. Number of samples in the range 35..36 dBm

Data Source

NodeB_RNC_RXI

Source Field

pmDpchCodePowerSf64

Source Section

RadioLinks

pmDpchCodePwrSf64P5MD_31

The average transmitted code power on a DPCH channel for spreading factor 64. In order to control load, number of measurements are restricted per TXB. Maximum number of

measurements are 10 % of the maximum number of CEs per TXB. Number of samples in the range 36..37 dBm

Data Source

NodeB_RNC_RXI

Source Field

pmDpchCodePowerSf64

Source Section

RadioLinks

pmDpchCodePwrSf64P5MD_32

The average transmitted code power on a DPCH channel for spreading factor 64. In order to control load, number of measurements are restricted per TXB. Maximum number of measurements are 10 % of the maximum number of CEs per TXB. Number of samples in the range 37..38 dBm

Data Source

NodeB_RNC_RXI

Source Field

pmDpchCodePowerSf64

Source Section

RadioLinks

pmDpchCodePwrSf64P5MD_33

The average transmitted code power on a DPCH channel for spreading factor 64. In order to control load, number of measurements are restricted per TXB. Maximum number of measurements are 10 % of the maximum number of CEs per TXB. Number of samples in the range 38..39 dBm

Data Source

NodeB_RNC_RXI

Source Field

pmDpchCodePowerSf64

© Copyright IBM Corp. 2008, 2009. All Rights Reserved.

Source Section

RadioLinks

pmDpchCodePwrSf64P5MD_34

The average transmitted code power on a DPCH channel for spreading factor 64. In order to control load, number of measurements are restricted per TXB. Maximum number of measurements are 10 % of the maximum number of CEs per TXB. Number of samples in the range 39..40 dBm

Data Source

NodeB_RNC_RXI

Source Field

pmDpchCodePowerSf64

Source Section

RadioLinks

pmDpchCodePwrSf64P5MD_35

The average transmitted code power on a DPCH channel for spreading factor 64. In order to control load, number of measurements are restricted per TXB. Maximum number of measurements are 10 % of the maximum number of CEs per TXB. Number of samples in the range 40..41 dBm

Data Source

NodeB_RNC_RXI

Source Field

pmDpchCodePowerSf64

Source Section

RadioLinks

pmDpchCodePwrSf64P5MD_36

The average transmitted code power on a DPCH channel for spreading factor 64. In order to control load, number of measurements are restricted per TXB. Maximum number of measurements are 10 % of the maximum number of CEs per TXB. Number of samples in the range 41..42 dBm

Data Source

NodeB_RNC_RXI

Source Field

pmDpchCodePowerSf64

Source Section

RadioLinks

pmDpchCodePwrSf64P5MD_37

The average transmitted code power on a DPCH channel for spreading factor 64. In order to control load, number of measurements are restricted per TXB. Maximum number of measurements are 10 % of the maximum number of CEs per TXB. Number of samples in the range 42..43 dBm

Data Source

NodeB_RNC_RXI

Source Field

pmDpchCodePowerSf64

Source Section

RadioLinks

pmDpdchBer_000

Average BER_dB for a transport channel carried by a DPDCH = 0 calculated as Log10(BER)

Data Source

NodeB_RNC_RXI

Source Field

pmDpdchBer

Source Section

RadioLinks

pmDpdchBer_001

Average BER_dB for a transport channel carried by a DPDCH < -2.06375 calculated as Log10(BER)

© Copyright IBM Corp. 2008, 2009. All Rights Reserved.

Data Source

NodeB_RNC_RXI

Source Field

pmDpdchBer

Source Section

RadioLinks

pmDpdchBer_002

Average BER_dB for a transport channel carried by a DPDCH = -2.06375..-2.04750 calculated as Log10(BER)

Data Source

NodeB_RNC_RXI

Source Field

pmDpdchBer

Source Section

RadioLinks

pmDpdchBer_003

Average BER_dB for a transport channel carried by a DPDCH = -2.04750..-2.03125 calculated as Log10(BER)

Data Source

NodeB_RNC_RXI

Source Field

pmDpdchBer

Source Section

RadioLinks

pmDpdchBer_004

Average BER_dB for a transport channel carried by a DPDCH = -2.03125..-2.01500 calculated as Log10(BER)

Data Source

NodeB_RNC_RXI

Source Field

pmDpdchBer

Source Section

RadioLinks

pmDpdchBer_005

Average BER_dB for a transport channel carried by a DPDCH = -2.01500..-1.99875 calculated as Log10(BER)

Data Source

NodeB_RNC_RXI

Source Field

pmDpdchBer

Source Section

RadioLinks

pmDpdchBer_006

Average BER_dB for a transport channel carried by a DPDCH = -1.99875..-1.98250 calculated as Log10(BER)

Data Source

NodeB_RNC_RXI

Source Field

pmDpdchBer

Source Section

RadioLinks

pmDpdchBer_007

Average BER_dB for a transport channel carried by a DPDCH = -1.98250..-1.96625 calculated as Log10(BER)

© Copyright IBM Corp. 2008, 2009. All Rights Reserved.

Data Source

NodeB_RNC_RXI

Source Field

pmDpdchBer

Source Section

RadioLinks

pmDpdchBer_008

Average BER_dB for a transport channel carried by a DPDCH = -1.96625..-1.95000 calculated as Log10(BER)

Data Source

NodeB_RNC_RXI

Source Field

pmDpdchBer

Source Section

RadioLinks

pmDpdchBer_009

Average BER_dB for a transport channel carried by a DPDCH = -1.95000..-1.93375 calculated as Log10(BER)

Data Source

NodeB_RNC_RXI

Source Field

pmDpdchBer

Source Section

RadioLinks

pmDpdchBer_010

Average BER_dB for a transport channel carried by a DPDCH = -1.93375..-1.91750 calculated as Log10(BER)

Data Source

NodeB_RNC_RXI

Source Field

pmDpdchBer

Source Section

RadioLinks

pmDpdchBer_011

Average BER_dB for a transport channel carried by a DPDCH = -1.91750..-1.90125 calculated as Log10(BER)

Data Source

NodeB_RNC_RXI

Source Field

pmDpdchBer

Source Section

RadioLinks

pmDpdchBer_012

Average BER_dB for a transport channel carried by a DPDCH = -1.90125..-1.88500 calculated as Log10(BER)

Data Source

NodeB_RNC_RXI

Source Field

pmDpdchBer

Source Section

RadioLinks

pmDpdchBer_013

Average BER_dB for a transport channel carried by a DPDCH = -1.88500..-1.86875 calculated as Log10(BER)

© Copyright IBM Corp. 2008, 2009. All Rights Reserved.

Data Source

NodeB_RNC_RXI

Source Field

pmDpdchBer

Source Section

RadioLinks

pmDpdchBer_014

Average BER_dB for a transport channel carried by a DPDCH = -1.86875..-1.85250 calculated as Log10(BER)

Data Source

NodeB_RNC_RXI

Source Field

pmDpdchBer

Source Section

RadioLinks

pmDpdchBer_015

Average BER_dB for a transport channel carried by a DPDCH = -1.85250..-1.83625 calculated as Log10(BER)

Data Source

NodeB_RNC_RXI

Source Field

pmDpdchBer

Source Section

RadioLinks

pmDpdchBer_016

Average BER_dB for a transport channel carried by a DPDCH = -1.83625..-1.82000 calculated as Log10(BER)

Data Source

NodeB_RNC_RXI

Source Field

pmDpdchBer

Source Section

RadioLinks

pmDpdchBer_017

Average BER_dB for a transport channel carried by a DPDCH = -1.82000..-1.80375 calculated as Log10(BER)

Data Source

NodeB_RNC_RXI

Source Field

pmDpdchBer

Source Section

RadioLinks

pmDpdchBer_018

Average BER_dB for a transport channel carried by a DPDCH = -1.80375..-1.78750 calculated as Log10(BER)

Data Source

NodeB_RNC_RXI

Source Field

pmDpdchBer

Source Section

RadioLinks

pmDpdchBer_019

Average BER_dB for a transport channel carried by a DPDCH = -1.78750..-1.77125 calculated as Log10(BER)

© Copyright IBM Corp. 2008, 2009. All Rights Reserved.

Data Source

NodeB_RNC_RXI

Source Field

pmDpdchBer

Source Section

RadioLinks

pmDpdchBer_020

Average BER_dB for a transport channel carried by a DPDCH = -1.77125..-1.75500 calculated as Log10(BER)

Data Source

NodeB_RNC_RXI

Source Field

pmDpdchBer

Source Section

RadioLinks

pmDpdchBer_021

Average BER_dB for a transport channel carried by a DPDCH = -1.75500..-1.73875 calculated as Log10(BER)

Data Source

NodeB_RNC_RXI

Source Field

pmDpdchBer

Source Section

RadioLinks

pmDpdchBer_022

Average BER_dB for a transport channel carried by a DPDCH = -1.73875..-1.72250 calculated as Log10(BER)

Data Source

NodeB_RNC_RXI

Source Field

pmDpdchBer

Source Section

RadioLinks

pmDpdchBer_023

Average BER_dB for a transport channel carried by a DPDCH = -1.72250..-1.70625 calculated as Log10(BER)

Data Source

NodeB_RNC_RXI

Source Field

pmDpdchBer

Source Section

RadioLinks

pmDpdchBer_024

Average BER_dB for a transport channel carried by a DPDCH = -1.70625..-1.69000 calculated as Log10(BER)

Data Source

NodeB_RNC_RXI

Source Field

pmDpdchBer

Source Section

RadioLinks

pmDpdchBer_025

Average BER_dB for a transport channel carried by a DPDCH = -1.69000..-1.67375 calculated as Log10(BER)

© Copyright IBM Corp. 2008, 2009. All Rights Reserved.

Data Source

NodeB_RNC_RXI

Source Field

pmDpdchBer

Source Section

RadioLinks

pmDpdchBer_026

Average BER_dB for a transport channel carried by a DPDCH = -1.67375..-1.65750 calculated as Log10(BER)

Data Source

NodeB_RNC_RXI

Source Field

pmDpdchBer

Source Section

RadioLinks

pmDpdchBer_027

Average BER_dB for a transport channel carried by a DPDCH = -1.65750..-1.64125 calculated as Log10(BER)

Data Source

NodeB_RNC_RXI

Source Field

pmDpdchBer

Source Section

RadioLinks

pmDpdchBer_028

Average BER_dB for a transport channel carried by a DPDCH = -1.64125..-1.62500 calculated as Log10(BER)

Data Source

NodeB_RNC_RXI

Source Field

pmDpdchBer

Source Section

RadioLinks

pmDpdchBer_029

Average BER_dB for a transport channel carried by a DPDCH = -1.62500..-1.60875 calculated as Log10(BER)

Data Source

NodeB_RNC_RXI

Source Field

pmDpdchBer

Source Section

RadioLinks

pmDpdchBer_030

Average BER_dB for a transport channel carried by a DPDCH = -1.60875..-1.59250 calculated as Log10(BER)

Data Source

NodeB_RNC_RXI

Source Field

pmDpdchBer

Source Section

RadioLinks

pmDpdchBer_031

Average BER_dB for a transport channel carried by a DPDCH = -1.59250..-1.57625 calculated as Log10(BER)

© Copyright IBM Corp. 2008, 2009. All Rights Reserved.

Data Source

NodeB_RNC_RXI

Source Field

pmDpdchBer

Source Section

RadioLinks

pmDpdchBer_032

Average BER_dB for a transport channel carried by a DPDCH = -1.57625..-1.56000 calculated as Log10(BER)

Data Source

NodeB_RNC_RXI

Source Field

pmDpdchBer

Source Section

RadioLinks

pmDpdchBer_033

Average BER_dB for a transport channel carried by a DPDCH = -1.56000..-1.54375 calculated as Log10(BER)

Data Source

NodeB_RNC_RXI

Source Field

pmDpdchBer

Source Section

RadioLinks

pmDpdchBer_034

Average BER_dB for a transport channel carried by a DPDCH = -1.54375..-1.52750 calculated as Log10(BER)

Data Source

NodeB_RNC_RXI

Source Field

pmDpdchBer

Source Section

RadioLinks

pmDpdchBer_035

Average BER_dB for a transport channel carried by a DPDCH = -1.52750..-1.51125 calculated as Log10(BER)

Data Source

NodeB_RNC_RXI

Source Field

pmDpdchBer

Source Section

RadioLinks

pmDpdchBer_036

Average BER_dB for a transport channel carried by a DPDCH = -1.51125..-1.49500 calculated as Log10(BER)

Data Source

NodeB_RNC_RXI

Source Field

pmDpdchBer

Source Section

RadioLinks

pmDpdchBer_037

Average BER_dB for a transport channel carried by a DPDCH = -1.49500..-1.47875 calculated as Log10(BER)

© Copyright IBM Corp. 2008, 2009. All Rights Reserved.

Data Source

NodeB_RNC_RXI

Source Field

pmDpdchBer

Source Section

RadioLinks

pmDpdchBer_038

Average BER_dB for a transport channel carried by a DPDCH = -1.47875..-1.46250 calculated as Log10(BER)

Data Source

NodeB_RNC_RXI

Source Field

pmDpdchBer

Source Section

RadioLinks

pmDpdchBer_039

Average BER_dB for a transport channel carried by a DPDCH = -1.46250..-1.44625 calculated as Log10(BER)

Data Source

NodeB_RNC_RXI

Source Field

pmDpdchBer

Source Section

RadioLinks

pmDpdchBer_040

Average BER_dB for a transport channel carried by a DPDCH = -1.44625..-1.43000 calculated as Log10(BER)

Data Source

NodeB_RNC_RXI

Source Field

pmDpdchBer

Source Section

RadioLinks

pmDpdchBer_041

Average BER_dB for a transport channel carried by a DPDCH = -1.43000..-1.41375 calculated as Log10(BER)

Data Source

NodeB_RNC_RXI

Source Field

pmDpdchBer

Source Section

RadioLinks

pmDpdchBer_042

Average BER_dB for a transport channel carried by a DPDCH = -1.41375..-1.39750 calculated as Log10(BER)

Data Source

NodeB_RNC_RXI

Source Field

pmDpdchBer

Source Section

RadioLinks

pmDpdchBer_043

Average BER_dB for a transport channel carried by a DPDCH = -1.39750..-1.38125 calculated as Log10(BER)

© Copyright IBM Corp. 2008, 2009. All Rights Reserved.

Data Source

NodeB_RNC_RXI

Source Field

pmDpdchBer

Source Section

RadioLinks

pmDpdchBer_044

Average BER_dB for a transport channel carried by a DPDCH = -1.38125..-1.36500 calculated as Log10(BER)

Data Source

NodeB_RNC_RXI

Source Field

pmDpdchBer

Source Section

RadioLinks

pmDpdchBer_045

Average BER_dB for a transport channel carried by a DPDCH = -1.36500..-1.34875 calculated as Log10(BER)

Data Source

NodeB_RNC_RXI

Source Field

pmDpdchBer

Source Section

RadioLinks

pmDpdchBer_046

Average BER_dB for a transport channel carried by a DPDCH = -1.34875..-1.33250 calculated as Log10(BER)

Data Source

NodeB_RNC_RXI

Source Field

pmDpdchBer

Source Section

RadioLinks

pmDpdchBer_047

Average BER_dB for a transport channel carried by a DPDCH = -1.33250..-1.31625 calculated as Log10(BER)

Data Source

NodeB_RNC_RXI

Source Field

pmDpdchBer

Source Section

RadioLinks

pmDpdchBer_048

Average BER_dB for a transport channel carried by a DPDCH = -1.31625..-1.30000 calculated as Log10(BER)

Data Source

NodeB_RNC_RXI

Source Field

pmDpdchBer

Source Section

RadioLinks

pmDpdchBer_049

Average BER_dB for a transport channel carried by a DPDCH = -1.30000..-1.28375 calculated as Log10(BER)

© Copyright IBM Corp. 2008, 2009. All Rights Reserved.

Data Source

NodeB_RNC_RXI

Source Field

pmDpdchBer

Source Section

RadioLinks

pmDpdchBer_050

Average BER_dB for a transport channel carried by a DPDCH = -1.28375..-1.26750 calculated as Log10(BER)

Data Source

NodeB_RNC_RXI

Source Field

pmDpdchBer

Source Section

RadioLinks

pmDpdchBer_051

Average BER_dB for a transport channel carried by a DPDCH = -1.26750..-1.25125 calculated as Log10(BER)

Data Source

NodeB_RNC_RXI

Source Field

pmDpdchBer

Source Section

RadioLinks

pmDpdchBer_052

Average BER_dB for a transport channel carried by a DPDCH = -1.25125..-1.23500 calculated as Log10(BER)

Data Source

NodeB_RNC_RXI

Source Field

pmDpdchBer

Source Section

RadioLinks

pmDpdchBer_053

Average BER_dB for a transport channel carried by a DPDCH = -1.23500..-1.21875 calculated as Log10(BER)

Data Source

NodeB_RNC_RXI

Source Field

pmDpdchBer

Source Section

RadioLinks

pmDpdchBer_054

Average BER_dB for a transport channel carried by a DPDCH = -1.21875..-1.20250 calculated as Log10(BER)

Data Source

NodeB_RNC_RXI

Source Field

pmDpdchBer

Source Section

RadioLinks

pmDpdchBer_055

Average BER_dB for a transport channel carried by a DPDCH = -1.20250..-1.18625 calculated as Log10(BER)

© Copyright IBM Corp. 2008, 2009. All Rights Reserved.

Data Source

NodeB_RNC_RXI

Source Field

pmDpdchBer

Source Section

RadioLinks

pmDpdchBer_056

Average BER_dB for a transport channel carried by a DPDCH = -1.18625..-1.17000 calculated as Log10(BER)

Data Source

NodeB_RNC_RXI

Source Field

pmDpdchBer

Source Section

RadioLinks

pmDpdchBer_057

Average BER_dB for a transport channel carried by a DPDCH = -1.17000..-1.15375 calculated as Log10(BER)

Data Source

NodeB_RNC_RXI

Source Field

pmDpdchBer

Source Section

RadioLinks

pmDpdchBer_058

Average BER_dB for a transport channel carried by a DPDCH = -1.15375..-1.13750 calculated as Log10(BER)

Data Source

NodeB_RNC_RXI

Source Field

pmDpdchBer

Source Section

RadioLinks

pmDpdchBer_059

Average BER_dB for a transport channel carried by a DPDCH = -1.13750..-1.12125 calculated as Log10(BER)

Data Source

NodeB_RNC_RXI

Source Field

pmDpdchBer

Source Section

RadioLinks

pmDpdchBer_060

Average BER_dB for a transport channel carried by a DPDCH = -1.12125..-1.10500 calculated as Log10(BER)

Data Source

NodeB_RNC_RXI

Source Field

pmDpdchBer

Source Section

RadioLinks

pmDpdchBer_061

Average BER_dB for a transport channel carried by a DPDCH = -1.10500..-1.08875 calculated as Log10(BER)

© Copyright IBM Corp. 2008, 2009. All Rights Reserved.

Data Source

NodeB_RNC_RXI

Source Field

pmDpdchBer

Source Section

RadioLinks

pmDpdchBer_062

Average BER_dB for a transport channel carried by a DPDCH = -1.08875..-1.07250 calculated as Log10(BER)

Data Source

NodeB_RNC_RXI

Source Field

pmDpdchBer

Source Section

RadioLinks

pmDpdchBer_063

Average BER_dB for a transport channel carried by a DPDCH = -1.07250..-1.05625 calculated as Log10(BER)

Data Source

NodeB_RNC_RXI

Source Field

pmDpdchBer

Source Section

RadioLinks

pmDpdchBer_064

Average BER_dB for a transport channel carried by a DPDCH = -1.05625..-1.04000 calculated as Log10(BER)

Data Source

NodeB_RNC_RXI

Source Field

pmDpdchBer

Source Section

RadioLinks

pmDpdchBer_065

Average BER_dB for a transport channel carried by a DPDCH = -1.04000..-1.02375 calculated as Log10(BER)

Data Source

NodeB_RNC_RXI

Source Field

pmDpdchBer

Source Section

RadioLinks

pmDpdchBer_066

Average BER_dB for a transport channel carried by a DPDCH = -1.02375..-1.00750 calculated as Log10(BER)

Data Source

NodeB_RNC_RXI

Source Field

pmDpdchBer

Source Section

RadioLinks

pmDpdchBer_067

Average BER_dB for a transport channel carried by a DPDCH = -1.00750..-0.99125 calculated as Log10(BER)

© Copyright IBM Corp. 2008, 2009. All Rights Reserved.

Data Source

NodeB_RNC_RXI

Source Field

pmDpdchBer

Source Section

RadioLinks

pmDpdchBer_068

Average BER_dB for a transport channel carried by a DPDCH = -0.99125..-0.97500 calculated as Log10(BER)

Data Source

NodeB_RNC_RXI

Source Field

pmDpdchBer

Source Section

RadioLinks

pmDpdchBer_069

Average BER_dB for a transport channel carried by a DPDCH = -0.97500..-0.95875 calculated as Log10(BER)

Data Source

NodeB_RNC_RXI

Source Field

pmDpdchBer

Source Section

RadioLinks

pmDpdchBer_070

Average BER_dB for a transport channel carried by a DPDCH = -0.95875..-0.94250 calculated as Log10(BER)

Data Source

NodeB_RNC_RXI

Source Field

pmDpdchBer

Source Section

RadioLinks

pmDpdchBer_071

Average BER_dB for a transport channel carried by a DPDCH = -0.94250..-0.92625 calculated as Log10(BER)

Data Source

NodeB_RNC_RXI

Source Field

pmDpdchBer

Source Section

RadioLinks

pmDpdchBer_072

Average BER_dB for a transport channel carried by a DPDCH = -0.92625..-0.91000 calculated as Log10(BER)

Data Source

NodeB_RNC_RXI

Source Field

pmDpdchBer

Source Section

RadioLinks

pmDpdchBer_073

Average BER_dB for a transport channel carried by a DPDCH = -0.91000..-0.89375 calculated as Log10(BER)

© Copyright IBM Corp. 2008, 2009. All Rights Reserved.

Data Source

NodeB_RNC_RXI

Source Field

pmDpdchBer

Source Section

RadioLinks

pmDpdchBer_074

Average BER_dB for a transport channel carried by a DPDCH = -0.89375..-0.87750 calculated as Log10(BER)

Data Source

NodeB_RNC_RXI

Source Field

pmDpdchBer

Source Section

RadioLinks

pmDpdchBer_075

Average BER_dB for a transport channel carried by a DPDCH = -0.87750..-0.86125 calculated as Log10(BER)

Data Source

NodeB_RNC_RXI

Source Field

pmDpdchBer

Source Section

RadioLinks

pmDpdchBer_076

Average BER_dB for a transport channel carried by a DPDCH = -0.86125..-0.84500 calculated as Log10(BER)

Data Source

NodeB_RNC_RXI

Source Field

pmDpdchBer

Source Section

RadioLinks

pmDpdchBer_077

Average BER_dB for a transport channel carried by a DPDCH = -0.84500..-0.82875 calculated as Log10(BER)

Data Source

NodeB_RNC_RXI

Source Field

pmDpdchBer

Source Section

RadioLinks

pmDpdchBer_078

Average BER_dB for a transport channel carried by a DPDCH = -0.82875..-0.81250 calculated as Log10(BER)

Data Source

NodeB_RNC_RXI

Source Field

pmDpdchBer

Source Section

RadioLinks

pmDpdchBer_079

Average BER_dB for a transport channel carried by a DPDCH = -0.81250..-0.79625 calculated as Log10(BER)

© Copyright IBM Corp. 2008, 2009. All Rights Reserved.

Data Source

NodeB_RNC_RXI

Source Field

pmDpdchBer

Source Section

RadioLinks

pmDpdchBer_080

Average BER_dB for a transport channel carried by a DPDCH = -0.79625..-0.78000 calculated as Log10(BER)

Data Source

NodeB_RNC_RXI

Source Field

pmDpdchBer

Source Section

RadioLinks

pmDpdchBer_081

Average BER_dB for a transport channel carried by a DPDCH = -0.78000..-0.76375 calculated as Log10(BER)

Data Source

NodeB_RNC_RXI

Source Field

pmDpdchBer

Source Section

RadioLinks

pmDpdchBer_082

Average BER_dB for a transport channel carried by a DPDCH = -0.76375..-0.74750 calculated as Log10(BER)

Data Source

NodeB_RNC_RXI

Source Field

pmDpdchBer

Source Section

RadioLinks

pmDpdchBer_083

Average BER_dB for a transport channel carried by a DPDCH = -0.74750..-0.73125 calculated as Log10(BER)

Data Source

NodeB_RNC_RXI

Source Field

pmDpdchBer

Source Section

RadioLinks

pmDpdchBer_084

Average BER_dB for a transport channel carried by a DPDCH = -0.73125..-0.71500 calculated as Log10(BER)

Data Source

NodeB_RNC_RXI

Source Field

pmDpdchBer

Source Section

RadioLinks

pmDpdchBer_085

Average BER_dB for a transport channel carried by a DPDCH = -0.71500..-0.69875 calculated as Log10(BER)

© Copyright IBM Corp. 2008, 2009. All Rights Reserved.

Data Source

NodeB_RNC_RXI

Source Field

pmDpdchBer

Source Section

RadioLinks

pmDpdchBer_086

Average BER_dB for a transport channel carried by a DPDCH = -0.69875..-0.68250 calculated as Log10(BER)

Data Source

NodeB_RNC_RXI

Source Field

pmDpdchBer

Source Section

RadioLinks

pmDpdchBer_087

Average BER_dB for a transport channel carried by a DPDCH = -0.68250..-0.66625 calculated as Log10(BER)

Data Source

NodeB_RNC_RXI

Source Field

pmDpdchBer

Source Section

RadioLinks

pmDpdchBer_088

Average BER_dB for a transport channel carried by a DPDCH = -0.66625..-0.65000 calculated as Log10(BER)

Data Source

NodeB_RNC_RXI

Source Field

pmDpdchBer

Source Section

RadioLinks

pmDpdchBer_089

Average BER_dB for a transport channel carried by a DPDCH = -0.65000..-0.63375 calculated as Log10(BER)

Data Source

NodeB_RNC_RXI

Source Field

pmDpdchBer

Source Section

RadioLinks

pmDpdchBer_090

Average BER_dB for a transport channel carried by a DPDCH = -0.63375..-0.61750 calculated as Log10(BER)

Data Source

NodeB_RNC_RXI

Source Field

pmDpdchBer

Source Section

RadioLinks

pmDpdchBer_091

Average BER_dB for a transport channel carried by a DPDCH = -0.61750..-0.60125 calculated as Log10(BER)

© Copyright IBM Corp. 2008, 2009. All Rights Reserved.

Data Source

NodeB_RNC_RXI

Source Field

pmDpdchBer

Source Section

RadioLinks

pmDpdchBer_092

Average BER_dB for a transport channel carried by a DPDCH = -0.60125..-0.58500 calculated as Log10(BER)

Data Source

NodeB_RNC_RXI

Source Field

pmDpdchBer

Source Section

RadioLinks

pmDpdchBer_093

Average BER_dB for a transport channel carried by a DPDCH = -0.58500..-0.56875 calculated as Log10(BER)

Data Source

NodeB_RNC_RXI

Source Field

pmDpdchBer

Source Section

RadioLinks

pmDpdchBer_094

Average BER_dB for a transport channel carried by a DPDCH = -0.56875..-0.55250 calculated as Log10(BER)

Data Source

NodeB_RNC_RXI

Source Field

pmDpdchBer

Source Section

RadioLinks

pmDpdchBer_095

Average BER_dB for a transport channel carried by a DPDCH = -0.55250..-0.53625 calculated as Log10(BER)

Data Source

NodeB_RNC_RXI

Source Field

pmDpdchBer

Source Section

RadioLinks

pmDpdchBer_096

Average BER_dB for a transport channel carried by a DPDCH = -0.53625..-0.52000 calculated as Log10(BER)

Data Source

NodeB_RNC_RXI

Source Field

pmDpdchBer

Source Section

RadioLinks

pmDpdchBer_097

Average BER_dB for a transport channel carried by a DPDCH = -0.52000..-0.50375 calculated as Log10(BER)

© Copyright IBM Corp. 2008, 2009. All Rights Reserved.

Data Source

NodeB_RNC_RXI

Source Field

pmDpdchBer

Source Section

RadioLinks

pmDpdchBer_098

Average BER_dB for a transport channel carried by a DPDCH = -0.50375..-0.48750 calculated as Log10(BER)

Data Source

NodeB_RNC_RXI

Source Field

pmDpdchBer

Source Section

RadioLinks

pmDpdchBer_099

Average BER_dB for a transport channel carried by a DPDCH = -0.48750..-0.47125 calculated as Log10(BER)

Data Source

NodeB_RNC_RXI

Source Field

pmDpdchBer

Source Section

RadioLinks

pmDpdchBer_100

Average BER_dB for a transport channel carried by a DPDCH = -0.47125..-0.45500 calculated as Log10(BER)

Data Source

NodeB_RNC_RXI

Source Field

pmDpdchBer

Source Section

RadioLinks

pmDpdchBer_101

Average BER_dB for a transport channel carried by a DPDCH = -0.45500..-0.43875 calculated as Log10(BER)

Data Source

NodeB_RNC_RXI

Source Field

pmDpdchBer

Source Section

RadioLinks

pmDpdchBer_102

Average BER_dB for a transport channel carried by a DPDCH = -0.43875..-0.42250 calculated as Log10(BER)

Data Source

NodeB_RNC_RXI

Source Field

pmDpdchBer

Source Section

RadioLinks

pmDpdchBer_103

Average BER_dB for a transport channel carried by a DPDCH = -0.42250..-0.40625 calculated as Log10(BER)

© Copyright IBM Corp. 2008, 2009. All Rights Reserved.

Data Source

NodeB_RNC_RXI

Source Field

pmDpdchBer

Source Section

RadioLinks

pmDpdchBer_104

Average BER_dB for a transport channel carried by a DPDCH = -0.40625..-0.39000 calculated as Log10(BER)

Data Source

NodeB_RNC_RXI

Source Field

pmDpdchBer

Source Section

RadioLinks

pmDpdchBer_105

Average BER_dB for a transport channel carried by a DPDCH = -0.39000..-0.37375 calculated as Log10(BER)

Data Source

NodeB_RNC_RXI

Source Field

pmDpdchBer

Source Section

RadioLinks

pmDpdchBer_106

Average BER_dB for a transport channel carried by a DPDCH = -0.37375..-0.35750 calculated as Log10(BER)

Data Source

NodeB_RNC_RXI

Source Field

pmDpdchBer

Source Section

RadioLinks

pmDpdchBer_107

Average BER_dB for a transport channel carried by a DPDCH = -0.35750..-0.34125 calculated as Log10(BER)

Data Source

NodeB_RNC_RXI

Source Field

pmDpdchBer

Source Section

RadioLinks

pmDpdchBer_108

Average BER_dB for a transport channel carried by a DPDCH = -0.34125..-0.32500 calculated as Log10(BER)

Data Source

NodeB_RNC_RXI

Source Field

pmDpdchBer

Source Section

RadioLinks

pmDpdchBer_109

Average BER_dB for a transport channel carried by a DPDCH = -0.32500..-0.30875 calculated as Log10(BER)

© Copyright IBM Corp. 2008, 2009. All Rights Reserved.

Data Source

NodeB_RNC_RXI

Source Field

pmDpdchBer

Source Section

RadioLinks

pmDpdchBer_110

Average BER_dB for a transport channel carried by a DPDCH = -0.30875..-0.29250 calculated as Log10(BER)

Data Source

NodeB_RNC_RXI

Source Field

pmDpdchBer

Source Section

RadioLinks

pmDpdchBer_111

Average BER_dB for a transport channel carried by a DPDCH = -0.29250..-0.27625 calculated as Log10(BER)

Data Source

NodeB_RNC_RXI

Source Field

pmDpdchBer

Source Section

RadioLinks

pmDpdchBer_112

Average BER_dB for a transport channel carried by a DPDCH = -0.27625..-0.26000 calculated as Log10(BER)

Data Source

NodeB_RNC_RXI

Source Field

pmDpdchBer

Source Section

RadioLinks

pmDpdchBer_113

Average BER_dB for a transport channel carried by a DPDCH = -0.26000..-0.24375 calculated as Log10(BER)

Data Source

NodeB_RNC_RXI

Source Field

pmDpdchBer

Source Section

RadioLinks

pmDpdchBer_114

Average BER_dB for a transport channel carried by a DPDCH = -0.24375..-0.22750 calculated as Log10(BER)

Data Source

NodeB_RNC_RXI

Source Field

pmDpdchBer

Source Section

RadioLinks

pmDpdchBer_115

Average BER_dB for a transport channel carried by a DPDCH = -0.22750..-0.21125 calculated as Log10(BER)

© Copyright IBM Corp. 2008, 2009. All Rights Reserved.

Data Source

NodeB_RNC_RXI

Source Field

pmDpdchBer

Source Section

RadioLinks

pmDpdchBer_116

Average BER_dB for a transport channel carried by a DPDCH = -0.21125..-0.19500 calculated as Log10(BER)

Data Source

NodeB_RNC_RXI

Source Field

pmDpdchBer

Source Section

RadioLinks

pmDpdchBer_117

Average BER_dB for a transport channel carried by a DPDCH = -0.19500..-0.17875 calculated as Log10(BER)

Data Source

NodeB_RNC_RXI

Source Field

pmDpdchBer

Source Section

RadioLinks

pmDpdchBer_118

Average BER_dB for a transport channel carried by a DPDCH = -0.17875..-0.16250 calculated as Log10(BER)

Data Source

NodeB_RNC_RXI

Source Field

pmDpdchBer

Source Section

RadioLinks

pmDpdchBer_119

Average BER_dB for a transport channel carried by a DPDCH = -0.16250..-0.14625 calculated as Log10(BER)

Data Source

NodeB_RNC_RXI

Source Field

pmDpdchBer

Source Section

RadioLinks

pmDpdchBer_120

Average BER_dB for a transport channel carried by a DPDCH = -0.14625..-0.13000 calculated as Log10(BER)

Data Source

NodeB_RNC_RXI

Source Field

pmDpdchBer

Source Section

RadioLinks

pmDpdchBer_121

Average BER_dB for a transport channel carried by a DPDCH = -0.13000..-0.11375 calculated as Log10(BER)

© Copyright IBM Corp. 2008, 2009. All Rights Reserved.

Data Source

NodeB_RNC_RXI

Source Field

pmDpdchBer

Source Section

RadioLinks

pmDpdchBer_122

Average BER_dB for a transport channel carried by a DPDCH = -0.11375..-0.09750 calculated as Log10(BER)

Data Source

NodeB_RNC_RXI

Source Field

pmDpdchBer

Source Section

RadioLinks

pmDpdchBer_123

Average BER_dB for a transport channel carried by a DPDCH = -0.09750..-0.08125 calculated as Log10(BER)

Data Source

NodeB_RNC_RXI

Source Field

pmDpdchBer

Source Section

RadioLinks

pmDpdchBer_124

Average BER_dB for a transport channel carried by a DPDCH = -0.08125..-0.06500 calculated as Log10(BER)

Data Source

NodeB_RNC_RXI

Source Field

pmDpdchBer

Source Section

RadioLinks

pmDpdchBer_125

Average BER_dB for a transport channel carried by a DPDCH = -0.06500..-0.04875 calculated as Log10(BER)

Data Source

NodeB_RNC_RXI

Source Field

pmDpdchBer

Source Section

RadioLinks

pmDpdchBer_126

Average BER_dB for a transport channel carried by a DPDCH = -0.04875..-0.03250 calculated as Log10(BER)

Data Source

NodeB_RNC_RXI

Source Field

pmDpdchBer

Source Section

RadioLinks

pmDpdchBer_127

Average BER_dB for a transport channel carried by a DPDCH = -0.03250..-0.01625 calculated as Log10(BER)

© Copyright IBM Corp. 2008, 2009. All Rights Reserved.

Data Source

NodeB_RNC_RXI

Source Field

pmDpdchBer

Source Section

RadioLinks

pmDpdchBer_128

Average BER_dB for a transport channel carried by a DPDCH = -0.01625..0.00000 calculated as Log10(BER)

Data Source

NodeB_RNC_RXI

Source Field

pmDpdchBer

Source Section

RadioLinks

pmDpdchBerP5MD_00

The average BER for a transport channel carried by a DPDCH physical channel. In order to control load, number of measurements are restricted per RAXB. Maximum number of measurements are 10 % of the maximum number of CEs per RAXB. Number of BER values that are equal to 0

Data Source

NodeB_RNC_RXI

Source Field

pmDpdchBer

Source Section

RadioLinks

pmDpdchBerP5MD_01

The average BER for a transport channel carried by a DPDCH physical channel. In order to control load, number of measurements are restricted per RAXB. Maximum number of measurements are 10 % of the maximum number of CEs per RAXB. Number of log10(BER) values in range MIN_VALUE..-2.06375

Data Source

NodeB_RNC_RXI

Source Field

pmDpdchBer

Source Section

RadioLinks

pmDpdchBerP5MD_02

The average BER for a transport channel carried by a DPDCH physical channel. In order to control load, number of measurements are restricted per RAXB. Maximum number of measurements are 10 % of the maximum number of CEs per RAXB. Number of log10(BER) values in range -2.06375..-1.9825

Data Source

NodeB_RNC_RXI

Source Field

pmDpdchBer

Source Section

RadioLinks

pmDpdchBerP5MD_03

The average BER for a transport channel carried by a DPDCH physical channel. In order to control load, number of measurements are restricted per RAXB. Maximum number of measurements are 10 % of the maximum number of CEs per RAXB. Number of log10(BER) values in range -1.9825..-1.90125

Data Source

NodeB_RNC_RXI

© Copyright IBM Corp. 2008, 2009. All Rights Reserved.

Source Field

pmDpdchBer

Source Section

RadioLinks

pmDpdchBerP5MD_04

The average BER for a transport channel carried by a DPDCH physical channel. In order to control load, number of measurements are restricted per RAXB. Maximum number of measurements are 10 % of the maximum number of CEs per RAXB. Number of log10(BER) values in range -1.90125..-1.82

Data Source

NodeB_RNC_RXI

Source Field

pmDpdchBer

Source Section

RadioLinks

pmDpdchBerP5MD_05

The average BER for a transport channel carried by a DPDCH physical channel. In order to control load, number of measurements are restricted per RAXB. Maximum number of measurements are 10 % of the maximum number of CEs per RAXB. Number of log10(BER) values in range -1.82..-1.73875

Data Source

NodeB_RNC_RXI

Source Field

pmDpdchBer

Source Section

RadioLinks

pmDpdchBerP5MD_06

The average BER for a transport channel carried by a DPDCH physical channel. In order to control load, number of measurements are restricted per RAXB. Maximum number of

measurements are 10 % of the maximum number of CEs per RAXB. Number of log10(BER) values in range -1.73875..-1.6575

Data Source

NodeB_RNC_RXI

Source Field

pmDpdchBer

Source Section

RadioLinks

pmDpdchBerP5MD_07

The average BER for a transport channel carried by a DPDCH physical channel. In order to control load, number of measurements are restricted per RAXB. Maximum number of measurements are 10 % of the maximum number of CEs per RAXB. Number of log10(BER) values in range -1.6575..-1.57625

Data Source

NodeB_RNC_RXI

Source Field

pmDpdchBer

Source Section

RadioLinks

pmDpdchBerP5MD_08

The average BER for a transport channel carried by a DPDCH physical channel. In order to control load, number of measurements are restricted per RAXB. Maximum number of measurements are 10 % of the maximum number of CEs per RAXB. Number of log10(BER) values in range -1.57625..-1.495

Data Source

NodeB_RNC_RXI

Source Field

pmDpdchBer

© Copyright IBM Corp. 2008, 2009. All Rights Reserved.

Source Section

RadioLinks

pmDpdchBerP5MD_09

The average BER for a transport channel carried by a DPDCH physical channel. In order to control load, number of measurements are restricted per RAXB. Maximum number of measurements are 10 % of the maximum number of CEs per RAXB. Number of log10(BER) values in range -1.495..-1.41375

Data Source

NodeB_RNC_RXI

Source Field

pmDpdchBer

Source Section

RadioLinks

pmDpdchBerP5MD_10

The average BER for a transport channel carried by a DPDCH physical channel. In order to control load, number of measurements are restricted per RAXB. Maximum number of measurements are 10 % of the maximum number of CEs per RAXB. Number of log10(BER) values in range -1.41375..-1.3325

Data Source

NodeB_RNC_RXI

Source Field

pmDpdchBer

Source Section

RadioLinks

pmDpdchBerP5MD_11

The average BER for a transport channel carried by a DPDCH physical channel. In order to control load, number of measurements are restricted per RAXB. Maximum number of measurements are 10 % of the maximum number of CEs per RAXB. Number of log10(BER) values in range -1.3325..-1.25125

Data Source

NodeB_RNC_RXI

Source Field

pmDpdchBer

Source Section

RadioLinks

pmDpdchBerP5MD_12

The average BER for a transport channel carried by a DPDCH physical channel. In order to control load, number of measurements are restricted per RAXB. Maximum number of measurements are 10 % of the maximum number of CEs per RAXB. Number of log10(BER) values in range -1.25125..-1.17

Data Source

NodeB_RNC_RXI

Source Field

pmDpdchBer

Source Section

RadioLinks

pmDpdchBerP5MD_13

The average BER for a transport channel carried by a DPDCH physical channel. In order to control load, number of measurements are restricted per RAXB. Maximum number of measurements are 10 % of the maximum number of CEs per RAXB. Number of log10(BER) values in range -1.17..-1.08875

Data Source

NodeB_RNC_RXI

Source Field

pmDpdchBer

Source Section

RadioLinks

© Copyright IBM Corp. 2008, 2009. All Rights Reserved.

pmDpdchBerP5MD_14

The average BER for a transport channel carried by a DPDCH physical channel. In order to control load, number of measurements are restricted per RAXB. Maximum number of measurements are 10 % of the maximum number of CEs per RAXB. Number of log10(BER) values in range -1.08875..-1.0075

Data Source

NodeB_RNC_RXI

Source Field

pmDpdchBer

Source Section

RadioLinks

pmDpdchBerP5MD_15

The average BER for a transport channel carried by a DPDCH physical channel. In order to control load, number of measurements are restricted per RAXB. Maximum number of measurements are 10 % of the maximum number of CEs per RAXB. Number of log10(BER) values in range -1.0075..-0.92625

Data Source

NodeB_RNC_RXI

Source Field

pmDpdchBer

Source Section

RadioLinks

pmDpdchBerP5MD_16

The average BER for a transport channel carried by a DPDCH physical channel. In order to control load, number of measurements are restricted per RAXB. Maximum number of measurements are 10 % of the maximum number of CEs per RAXB. Number of log10(BER) values in range -0.92625..-0.845

Data Source

NodeB_RNC_RXI

Source Field

pmDpdchBer

Source Section

RadioLinks

pmDpdchBerP5MD_17

The average BER for a transport channel carried by a DPDCH physical channel. In order to control load, number of measurements are restricted per RAXB. Maximum number of measurements are 10 % of the maximum number of CEs per RAXB. Number of log10(BER) values in range -0.845..-0.76375

Data Source

NodeB_RNC_RXI

Source Field

pmDpdchBer

Source Section

RadioLinks

pmDpdchBerP5MD_18

The average BER for a transport channel carried by a DPDCH physical channel. In order to control load, number of measurements are restricted per RAXB. Maximum number of measurements are 10 % of the maximum number of CEs per RAXB. Number of log10(BER) values in range -0.76375..-0.6825

Data Source

NodeB_RNC_RXI

Source Field

pmDpdchBer

Source Section

RadioLinks

pmDpdchBerP5MD_19

The average BER for a transport channel carried by a DPDCH physical channel. In order to control load, number of measurements are restricted per RAXB. Maximum number of

© Copyright IBM Corp. 2008, 2009. All Rights Reserved.

measurements are 10 % of the maximum number of CEs per RAXB. Number of log10(BER) values in range -0.6825..-0.60125

Data Source

NodeB_RNC_RXI

Source Field

pmDpdchBer

Source Section

RadioLinks

pmDpdchBerP5MD_20

The average BER for a transport channel carried by a DPDCH physical channel. In order to control load, number of measurements are restricted per RAXB. Maximum number of measurements are 10 % of the maximum number of CEs per RAXB. Number of log10(BER) values in range -0.60125..-0.52

Data Source

NodeB_RNC_RXI

Source Field

pmDpdchBer

Source Section

RadioLinks

pmDpdchBerP5MD_21

The average BER for a transport channel carried by a DPDCH physical channel. In order to control load, number of measurements are restricted per RAXB. Maximum number of measurements are 10 % of the maximum number of CEs per RAXB. Number of log10(BER) values in range -0.52..-0.43875

Data Source

NodeB_RNC_RXI

Source Field

pmDpdchBer

Source Section

RadioLinks

pmDpdchBerP5MD_22

The average BER for a transport channel carried by a DPDCH physical channel. In order to control load, number of measurements are restricted per RAXB. Maximum number of measurements are 10 % of the maximum number of CEs per RAXB. Number of log10(BER) values in range -0.43875..-0.3575

Data Source

NodeB_RNC_RXI

Source Field

pmDpdchBer

Source Section

RadioLinks

pmDpdchBerP5MD_23

The average BER for a transport channel carried by a DPDCH physical channel. In order to control load, number of measurements are restricted per RAXB. Maximum number of measurements are 10 % of the maximum number of CEs per RAXB. Number of log10(BER) values in range -0.3575..-0.27625

Data Source

NodeB_RNC_RXI

Source Field

pmDpdchBer

Source Section

RadioLinks

pmDpdchBerP5MD_24

The average BER for a transport channel carried by a DPDCH physical channel. In order to control load, number of measurements are restricted per RAXB. Maximum number of measurements are 10 % of the maximum number of CEs per RAXB. Number of log10(BER) values in range >= -0.27625

© Copyright IBM Corp. 2008, 2009. All Rights Reserved.

Data Source

NodeB_RNC_RXI

Source Field

pmDpdchBer

Source Section

RadioLinks

pmOutOfSynch_00

Duration of out of sync in millisecond. Reported for all RL set activated during the 15 minutes period. 0..200 ms

Data Source

NodeB_RNC_RXI

Source Field

pmOutOfSynch

Source Section

RadioLinks

pmOutOfSynch_01

Duration of out of sync in millisecond. Reported for all RL set activated during the 15 minutes period. 200..400 ms

Data Source

NodeB_RNC_RXI

Source Field

pmOutOfSynch

Source Section

RadioLinks

pmOutOfSynch_02

Duration of out of sync in millisecond. Reported for all RL set activated during the 15 minutes period. 400..600 ms

Data Source

NodeB_RNC_RXI

Source Field

pmOutOfSynch

Source Section

RadioLinks

pmOutOfSynch_03

Duration of out of sync in millisecond. Reported for all RL set activated during the 15 minutes period. 600..800 ms

Data Source

NodeB_RNC_RXI

Source Field

pmOutOfSynch

Source Section

RadioLinks

pmOutOfSynch_04

Duration of out of sync in millisecond. Reported for all RL set activated during the 15 minutes period. 800..1000 ms

Data Source

NodeB_RNC_RXI

Source Field

pmOutOfSynch

Source Section

RadioLinks

pmOutOfSynch_05

Duration of out of sync in millisecond. Reported for all RL set activated during the 15 minutes period. 1000..1200 ms

© Copyright IBM Corp. 2008, 2009. All Rights Reserved.

Data Source

NodeB_RNC_RXI

Source Field

pmOutOfSynch

Source Section

RadioLinks

pmOutOfSynch_06

Duration of out of sync in millisecond. Reported for all RL set activated during the 15 minutes period. 1200..1400 ms

Data Source

NodeB_RNC_RXI

Source Field

pmOutOfSynch

Source Section

RadioLinks

pmOutOfSynch_07

Duration of out of sync in millisecond. Reported for all RL set activated during the 15 minutes period. 1400..1600 ms

Data Source

NodeB_RNC_RXI

Source Field

pmOutOfSynch

Source Section

RadioLinks

pmOutOfSynch_08

Duration of out of sync in millisecond. Reported for all RL set activated during the 15 minutes period. 1600..1800 ms

Data Source

NodeB_RNC_RXI

Source Field

pmOutOfSynch

Source Section

RadioLinks

pmOutOfSynch_09

Duration of out of sync in millisecond. Reported for all RL set activated during the 15 minutes period. 1800..2000 ms

Data Source

NodeB_RNC_RXI

Source Field

pmOutOfSynch

Source Section

RadioLinks

pmOutOfSynch_10

Duration of out of sync in millisecond. Reported for all RL set activated during the 15 minutes period. 2000..2200 ms

Data Source

NodeB_RNC_RXI

Source Field

pmOutOfSynch

Source Section

RadioLinks

pmOutOfSynch_11

Duration of out of sync in millisecond. Reported for all RL set activated during the 15 minutes period. 2200..2400 ms

© Copyright IBM Corp. 2008, 2009. All Rights Reserved.

Data Source

NodeB_RNC_RXI

Source Field

pmOutOfSynch

Source Section

RadioLinks

pmOutOfSynch_12

Duration of out of sync in millisecond. Reported for all RL set activated during the 15 minutes period. 2400..2600 ms

Data Source

NodeB_RNC_RXI

Source Field

pmOutOfSynch

Source Section

RadioLinks

pmOutOfSynch_13

Duration of out of sync in millisecond. Reported for all RL set activated during the 15 minutes period. 2600..2800 ms

Data Source

NodeB_RNC_RXI

Source Field

pmOutOfSynch

Source Section

RadioLinks

pmOutOfSynch_14

Duration of out of sync in millisecond. Reported for all RL set activated during the 15 minutes period. 2800..3000 ms

Data Source

NodeB_RNC_RXI

Source Field

pmOutOfSynch

Source Section

RadioLinks

pmOutOfSynch_15

Duration of out of sync in millisecond. Reported for all RL set activated during the 15 minutes period. 3000..3200 ms

Data Source

NodeB_RNC_RXI

Source Field

pmOutOfSynch

Source Section

RadioLinks

pmOutOfSynch_16

Duration of out of sync in millisecond. Reported for all RL set activated during the 15 minutes period. 3200..3400 ms

Data Source

NodeB_RNC_RXI

Source Field

pmOutOfSynch

Source Section

RadioLinks

pmOutOfSynch_17

Duration of out of sync in millisecond. Reported for all RL set activated during the 15 minutes period. 3400..3600 ms

© Copyright IBM Corp. 2008, 2009. All Rights Reserved.

Data Source

NodeB_RNC_RXI

Source Field

pmOutOfSynch

Source Section

RadioLinks

pmOutOfSynch_18

Duration of out of sync in millisecond. Reported for all RL set activated during the 15 minutes period. 3600..3800 ms

Data Source

NodeB_RNC_RXI

Source Field

pmOutOfSynch

Source Section

RadioLinks

pmOutOfSynch_19

Duration of out of sync in millisecond. Reported for all RL set activated during the 15 minutes period. 3800..4000 ms

Data Source

NodeB_RNC_RXI

Source Field

pmOutOfSynch

Source Section

RadioLinks

pmOutOfSynch_20

Duration of out of sync in millisecond. Reported for all RL set activated during the 15 minutes period. 4000..4200 ms

Data Source

NodeB_RNC_RXI

Source Field

pmOutOfSynch

Source Section

RadioLinks

pmOutOfSynch_21

Duration of out of sync in millisecond. Reported for all RL set activated during the 15 minutes period. 4200..4400 ms

Data Source

NodeB_RNC_RXI

Source Field

pmOutOfSynch

Source Section

RadioLinks

pmOutOfSynch_22

Duration of out of sync in millisecond. Reported for all RL set activated during the 15 minutes period. 4400..4600 ms

Data Source

NodeB_RNC_RXI

Source Field

pmOutOfSynch

Source Section

RadioLinks

pmOutOfSynch_23

Duration of out of sync in millisecond. Reported for all RL set activated during the 15 minutes period. 4600..4800 ms

© Copyright IBM Corp. 2008, 2009. All Rights Reserved.

Data Source

NodeB_RNC_RXI

Source Field

pmOutOfSynch

Source Section

RadioLinks

pmOutOfSynch_24

Duration of out of sync in millisecond. Reported for all RL set activated during the 15 minutes period. 4800..5000 ms

Data Source

NodeB_RNC_RXI

Source Field

pmOutOfSynch

Source Section

RadioLinks

pmOutOfSynch_25

Duration of out of sync in millisecond. Reported for all RL set activated during the 15 minutes period. 5000..5200 ms

Data Source

NodeB_RNC_RXI

Source Field

pmOutOfSynch

Source Section

RadioLinks

pmOutOfSynch_26

Duration of out of sync in millisecond. Reported for all RL set activated during the 15 minutes period. 5200..5400 ms

Data Source

NodeB_RNC_RXI

Source Field

pmOutOfSynch

Source Section

RadioLinks

pmOutOfSynch_27

Duration of out of sync in millisecond. Reported for all RL set activated during the 15 minutes period. 5400..5600 ms

Data Source

NodeB_RNC_RXI

Source Field

pmOutOfSynch

Source Section

RadioLinks

pmOutOfSynch_28

Duration of out of sync in millisecond. Reported for all RL set activated during the 15 minutes period. 5600..5800 ms

Data Source

NodeB_RNC_RXI

Source Field

pmOutOfSynch

Source Section

RadioLinks

pmOutOfSynch_29

Duration of out of sync in millisecond. Reported for all RL set activated during the 15 minutes period. 5800..6000 ms

© Copyright IBM Corp. 2008, 2009. All Rights Reserved.

Data Source

NodeB_RNC_RXI

Source Field

pmOutOfSynch

Source Section

RadioLinks

pmOutOfSynch_30

Duration of out of sync in millisecond. Reported for all RL set activated during the 15 minutes period. 6000..6200 ms

Data Source

NodeB_RNC_RXI

Source Field

pmOutOfSynch

Source Section

RadioLinks

pmOutOfSynch_31

Duration of out of sync in millisecond. Reported for all RL set activated during the 15 minutes period. 6200..6400 ms3

Data Source

NodeB_RNC_RXI

Source Field

pmOutOfSynch

Source Section

RadioLinks

pmOutOfSynch_32

Duration of out of sync in millisecond. Reported for all RL set activated during the 15 minutes period. 6400..6600 ms

Data Source

NodeB_RNC_RXI

Source Field

pmOutOfSynch

Source Section

RadioLinks

pmOutOfSynch_33

Duration of out of sync in millisecond. Reported for all RL set activated during the 15 minutes period. 6600..6800 ms

Data Source

NodeB_RNC_RXI

Source Field

pmOutOfSynch

Source Section

RadioLinks

pmOutOfSynch_34

Duration of out of sync in millisecond. Reported for all RL set activated during the 15 minutes period. 6800..7000 ms

Data Source

NodeB_RNC_RXI

Source Field

pmOutOfSynch

Source Section

RadioLinks

pmOutOfSynch_35

Duration of out of sync in millisecond. Reported for all RL set activated during the 15 minutes period. 7000..7200 ms

© Copyright IBM Corp. 2008, 2009. All Rights Reserved.

Data Source

NodeB_RNC_RXI

Source Field

pmOutOfSynch

Source Section

RadioLinks

pmOutOfSynch_36

Duration of out of sync in millisecond. Reported for all RL set activated during the 15 minutes period. 7200..7400 ms

Data Source

NodeB_RNC_RXI

Source Field

pmOutOfSynch

Source Section

RadioLinks

pmOutOfSynch_37

Duration of out of sync in millisecond. Reported for all RL set activated during the 15 minutes period. 7400..7600 ms

Data Source

NodeB_RNC_RXI

Source Field

pmOutOfSynch

Source Section

RadioLinks

pmOutOfSynch_38

Duration of out of sync in millisecond. Reported for all RL set activated during the 15 minutes period. 7600..7800 ms

Data Source

NodeB_RNC_RXI

Source Field

pmOutOfSynch

Source Section

RadioLinks

pmOutOfSynch_39

Duration of out of sync in millisecond. Reported for all RL set activated during the 15 minutes period. 7800..8000 ms

Data Source

NodeB_RNC_RXI

Source Field

pmOutOfSynch

Source Section

RadioLinks

pmOutOfSynch_40

Duration of out of sync in millisecond. Reported for all RL set activated during the 15 minutes period. 8000..8200 ms

Data Source

NodeB_RNC_RXI

Source Field

pmOutOfSynch

Source Section

RadioLinks

pmOutOfSynch_41

Duration of out of sync in millisecond. Reported for all RL set activated during the 15 minutes period. 8200..8400 ms

© Copyright IBM Corp. 2008, 2009. All Rights Reserved.

Data Source

NodeB_RNC_RXI

Source Field

pmOutOfSynch

Source Section

RadioLinks

pmOutOfSynch_42

Duration of out of sync in millisecond. Reported for all RL set activated during the 15 minutes period. 8400..8600 ms

Data Source

NodeB_RNC_RXI

Source Field

pmOutOfSynch

Source Section

RadioLinks

pmOutOfSynch_43

Duration of out of sync in millisecond. Reported for all RL set activated during the 15 minutes period. 8600..8800 ms

Data Source

NodeB_RNC_RXI

Source Field

pmOutOfSynch

Source Section

RadioLinks

pmOutOfSynch_44

Duration of out of sync in millisecond. Reported for all RL set activated during the 15 minutes period. 8800..9000 ms

Data Source

NodeB_RNC_RXI

Source Field

pmOutOfSynch

Source Section

RadioLinks

pmOutOfSynch_45

Duration of out of sync in millisecond. Reported for all RL set activated during the 15 minutes period. 9000..9200 ms

Data Source

NodeB_RNC_RXI

Source Field

pmOutOfSynch

Source Section

RadioLinks

pmOutOfSynch_46

Duration of out of sync in millisecond. Reported for all RL set activated during the 15 minutes period. 9200..9400 ms

Data Source

NodeB_RNC_RXI

Source Field

pmOutOfSynch

Source Section

RadioLinks

pmOutOfSynch_47

Duration of out of sync in millisecond. Reported for all RL set activated during the 15 minutes period. 9400..9600 ms

© Copyright IBM Corp. 2008, 2009. All Rights Reserved.

Data Source

NodeB_RNC_RXI

Source Field

pmOutOfSynch

Source Section

RadioLinks

pmOutOfSynch_48

Duration of out of sync in millisecond. Reported for all RL set activated during the 15 minutes period. 9600..9800 ms

Data Source

NodeB_RNC_RXI

Source Field

pmOutOfSynch

Source Section

RadioLinks

pmOutOfSynch_49

Duration of out of sync in millisecond. Reported for all RL set activated during the 15 minutes period. 9800..10000 ms

Data Source

NodeB_RNC_RXI

Source Field

pmOutOfSynch

Source Section

RadioLinks

pmRLSSupSynchToUnsynch

The number of state transitions from synchronized to unsynchronized during a GP

Data Source

NodeB_RNC_RXI

Source Field

pmRLSSupSynchToUnsynch

Source Section

RadioLinks

pmRLSSupWaitToOutOfSynch

The number of wait to out-of-synch state transitions

Data Source

NodeB

Source Field

pmRLSSupWaitToOutOfSynch

Source Section

RadioLinks

pmUISynchTime_00

The time between Downlink (DL) TX assignment,and achieved Uplink (UL) synchronization for RLsin the range 0-50 ms

Data Source

NodeB_RNC_RXI

Source Field

pmUISynchTime

Source Section

RadioLinks

pmUISynchTime_01

The time between Downlink (DL) TX assignment,and achieved Uplink (UL) synchronization for RLs.in the range 50-100 ms

© Copyright IBM Corp. 2008, 2009. All Rights Reserved.

Data Source

NodeB_RNC_RXI

Source Field

pmUISynchTime

Source Section

RadioLinks

pmUISynchTime_02

The time between Downlink (DL) TX assignment,and achieved Uplink (UL) synchronization for RLs.in the range 100-150 ms

Data Source

NodeB_RNC_RXI

Source Field

pmUISynchTime

Source Section

RadioLinks

pmUISynchTime_03

The time between Downlink (DL) TX assignment,and achieved Uplink (UL) synchronization for RLs.in the range 150-200 ms

Data Source

NodeB_RNC_RXI

Source Field

pmUISynchTime

Source Section

RadioLinks

pmUISynchTime_04

The time between Downlink (DL) TX assignment,and achieved Uplink (UL) synchronization for RLs.in the range 200-250 ms

Data Source

NodeB_RNC_RXI

Source Field

pmUISynchTime

Source Section

RadioLinks

pmUISynchTime_05

The time between Downlink (DL) TX assignment,and achieved Uplink (UL) synchronization for RLs.in the range 250-300 ms

Data Source

NodeB_RNC_RXI

Source Field

pmUISynchTime

Source Section

RadioLinks

pmUISynchTime_06

The time between Downlink (DL) TX assignment,and achieved Uplink (UL) synchronization for RLs.in the range 300-350 ms

Data Source

NodeB_RNC_RXI

Source Field

pmUISynchTime

Source Section

RadioLinks

pmUISynchTime_07

The time between Downlink (DL) TX assignment,and achieved Uplink (UL) synchronization for RLs.in the range 350-400 ms

© Copyright IBM Corp. 2008, 2009. All Rights Reserved.

Data Source

NodeB_RNC_RXI

Source Field

pmUISynchTime

Source Section

RadioLinks

pmUISynchTime_08

The time between Downlink (DL) TX assignment,and achieved Uplink (UL) synchronization for RLs.in the range 400-450 ms

Data Source

NodeB_RNC_RXI

Source Field

pmUISynchTime

Source Section

RadioLinks

pmUISynchTime_09

The time between Downlink (DL) TX assignment,and achieved Uplink (UL) synchronization for RLs.in the range 450-1000 ms

Data Source

NodeB_RNC_RXI

Source Field

pmUISynchTime

Source Section

RadioLinks

pmUISynchTime_10

The time between Downlink (DL) TX assignment,and achieved Uplink (UL) synchronization for RLs.in the range 1000-2000 ms

Data Source

NodeB_RNC_RXI

Source Field

pmUISynchTime

Source Section

RadioLinks

pmUISynchTime_11

The time between Downlink (DL) TX assignment,and achieved Uplink (UL) synchronization for RLs.in the range 2000-3000 ms

Data Source

NodeB_RNC_RXI

Source Field

pmUISynchTime

Source Section

RadioLinks

pmUISynchTime_12

The time between Downlink (DL) TX assignment,and achieved Uplink (UL) synchronization for RLs.in the range 3000-4000 ms

Data Source

NodeB_RNC_RXI

Source Field

pmUISynchTime

Source Section

RadioLinks

pmUISynchTime_13

The time between Downlink (DL) TX assignment,and achieved Uplink (UL) synchronization for RLs.in the range 4000-5000 ms

© Copyright IBM Corp. 2008, 2009. All Rights Reserved.

Data Source

NodeB_RNC_RXI

Source Field

pmUISynchTime

Source Section

RadioLinks

pmUISynchTime_14

The time between Downlink (DL) TX assignment,and achieved Uplink (UL) synchronization for RLs.in the range 5000-6000 ms

Data Source

NodeB_RNC_RXI

Source Field

pmUISynchTime

Source Section

RadioLinks

pmUISynchTime_15

The time between Downlink (DL) TX assignment,and achieved Uplink (UL) synchronization for RLs.in the range 5000-infinit ms

Data Source

NodeB_RNC_RXI

Source Field

pmUISynchTime

Source Section

RadioLinks

pmUISynchTimeSHO_00

The synchronization time between DL RX assignment and achieved UL synchronization for RLs not belonging to the first RLS.in the range 0-50 ms

Data Source

NodeB_RNC_RXI

Source Field

pmUISynchTimeSHO

Source Section

RadioLinks

pmUISynchTimeSHO_01

The synchronization time between DL RX assignment and achieved UL synchronization for RLs not belonging to the first RLS in the range 50-100 ms

Data Source

NodeB_RNC_RXI

Source Field

pmUISynchTimeSHO

Source Section

RadioLinks

pmUISynchTimeSHO_02

The synchronization time between DL RX assignment and achieved UL synchronization for RLs not belonging to the first RLS in the range 100-150 ms

Data Source

NodeB_RNC_RXI

Source Field

pmUISynchTimeSHO

Source Section

RadioLinks

pmUISynchTimeSHO_03

The synchronization time between DL RX assignment and achieved UL synchronization for RLs not belonging to the first RLS in the range 150-200 ms

© Copyright IBM Corp. 2008, 2009. All Rights Reserved.

Data Source

NodeB_RNC_RXI

Source Field

pmUISynchTimeSHO

Source Section

RadioLinks

pmUISynchTimeSHO_04

The synchronization time between DL RX assignment and achieved UL synchronization for RLs not belonging to the first RLS in the range 200-250 ms

Data Source

NodeB_RNC_RXI

Source Field

pmUISynchTimeSHO

Source Section

RadioLinks

pmUISynchTimeSHO_05

The synchronization time between DL RX assignment and achieved UL synchronization for RLs not belonging to the first RLS in the range 250-300 ms

Data Source

NodeB_RNC_RXI

Source Field

pmUISynchTimeSHO

Source Section

RadioLinks

pmUISynchTimeSHO_06

The synchronization time between DL RX assignment and achieved UL synchronization for RLs not belonging to the first RLS in the range 300-350 ms

Data Source

NodeB_RNC_RXI

Source Field

pmUISynchTimeSHO

Source Section

RadioLinks

pmUISynchTimeSHO_07

The synchronization time between DL RX assignment and achieved UL synchronization for RLs not belonging to the first RLS in the range 350-400 ms

Data Source

NodeB_RNC_RXI

Source Field

pmUISynchTimeSHO

Source Section

RadioLinks

pmUISynchTimeSHO_08

The synchronization time between DL RX assignment and achieved UL synchronization for RLs not belonging to the first RLS in the range 400-450 ms

Data Source

NodeB_RNC_RXI

Source Field

pmUISynchTimeSHO

Source Section

RadioLinks

pmUISynchTimeSHO_09

The synchronization time between DL RX assignment and achieved UL synchronization for RLs not belonging to the first RLS in the range 450-1000 ms

© Copyright IBM Corp. 2008, 2009. All Rights Reserved.

Data Source

NodeB_RNC_RXI

Source Field

pmUISynchTimeSHO

Source Section

RadioLinks

pmUISynchTimeSHO_10

The synchronization time between DL RX assignment and achieved UL synchronization for RLs not belonging to the first RLS in the range 1000-2000 m

Data Source

NodeB_RNC_RXI

Source Field

pmUISynchTimeSHO

Source Section

RadioLinks

pmUISynchTimeSHO_11

The synchronization time between DL RX assignment and achieved UL synchronization for RLs not belonging to the first RLS in the range 2000-3000 ms

Data Source

NodeB_RNC_RXI

Source Field

pmUISynchTimeSHO

Source Section

RadioLinks

pmUISynchTimeSHO_12

The synchronization time between DL RX assignment and achieved UL synchronization for RLs not belonging to the first RLS in the range 3000-4000 ms

Data Source

NodeB_RNC_RXI

Source Field

pmUISynchTimeSHO

Source Section

RadioLinks

pmUISynchTimeSHO_13

The synchronization time between DL RX assignment and achieved UL synchronization for RLs not belonging to the first RLS in the range 4000-5000 ms

Data Source

NodeB_RNC_RXI

Source Field

pmUISynchTimeSHO

Source Section

RadioLinks

pmUISynchTimeSHO_14

The synchronization time between DL RX assignment and achieved UL synchronization for RLs not belonging to the first RLS in the range 5000-6000 ms

Data Source

NodeB_RNC_RXI

Source Field

pmUISynchTimeSHO

Source Section

RadioLinks

pmUISynchTimeSHO_15

The synchronization time between DL RX assignment and achieved UL synchronization for RLs not belonging to the first RLS in the range 5000-infinit ms

© Copyright IBM Corp. 2008, 2009. All Rights Reserved.

Data Source

NodeB_RNC_RXI

Source Field

pmUISynchTimeSHO

Source Section

RadioLinks

Ranap Primitive Calculations

The following is a list of primitive calculations for the Ranap entity.

GRAPHmultiLineSeparator

Special Control Field for Multi-Line Graphs

Calculation

```
""
```

NUMDAYS

of days in Report

Calculation

```
DAYSINREPORT()
```

NUMHOURS

of hours in Summation Data

Calculation

Ranap Peg Counts

The following is a list of peg counts for the Ranap entity.

PERLENSEC

Period length in seconds

Data Source

RNC

Source Field

PERLENSEC

Source Section

Ranap_Gen

pmNnsfLoadDistributionRouted

Number of Ue Initial Direct Transfer messages routed to this Iu interface by the NNSF (Non access stratum Node Selection Function), for which the NRI (Network Resource Identifier) transferred by the Ue does not match the NRI of any configured Iu interface.

Data Source

RNC

Source Field

pmNnsfLoadDistributionRouted

Source Section

Ranap

pmNnsfNriRouted

Number of Ue Initial Direct Transfer messages routed to this Iu interface by the NNSF (Non access stratum Node Selection Function), for which the NRI (Network Resource Identifier) transferred by the Ue matches the NRI of this Iu interface.

Data Source

RNC

Source Field

pmNnsfNriRouted

Source Section

Ranap

RNC_RELEASE

Release

Data Source

RNC

© Copyright IBM Corp. 2008, 2009. All Rights Reserved.

Source Field

RNC_RELEASE

Source Section

Ranap_Gen

RNC

The following is a list of for the RNC entity.

RNC_SubNetwork_Region

RNC SubNetwork Region ID

RNC Primitive Calculations

The following is a list of primitive calculations for the RNC entity.

Average_CS_Speech_Users_per_RNC

The average number of speech users per RNC in a measurement period of 15 minutes. The sum is performed on the result of the fraction

Calculation

```
AGGR(NodeB.Sector.UtranCell,Average_CS_Speech_Users_per_Cell)
```

Avr_PS_Interactive_Calls_DCH

The average number of PS interactive calls on DCH per RNC, where pmSamplesRabEstablish(UeRc) could be for any UeRc = 5 , 6, or 7. The value of samples should be equal for all cases.

Calculation

```
AGGR(RABType[sub-
String(LocalKey,0,9)=="PACKET_64"],Avr_PS_RAB_STBL_SUCC_RATE)
```

Avr_PS_Interactive_Calls_FACH

The average number of PS interactive calls on FACH per RNC pmSamplesRabEstablish(UeRc) could be for only UeRc = 4.

Calculation

```
AGGR(RABType[LocalKey == "PACKET_RACH_FACH"], Avr_PS_RAB_STBL_SUCC_RATE )
```

CS_64_DL_Code_Utilization_per_RNC

The average number of downlink code is occupied for CS 64 traffic per RNC in a measurement period.

Calculation

```
AGGR(NodeB.Sector.UtranCell,CS_64_DL_Code_Utilization)
```

CS_Speech_Downlink_Code_Utilization_per_RNC

The average number of downlink code is occupied for speech traffic per RNC in a measurement period of 15 minutes.

Calculation

```
AGGR(NodeB.Sector.UtranCell,CS_Speech_Downlink_Code_Utilization_per_Cell)
```

CS_Speech_Erlang_per_RNC

The average speech traffic Erlang carried per RNC. This is best fitted with Erlang definition through hourly report

Calculation

```
AGGR(NodeB.Sector.UtranCell,CS_Speech_Erlang)
```

DL_Payload_PS_Interactive_DCH

The downlink payload in kbits carried on DCH before splitting for PS Interactive per RNC. Sum of the pmDlDchTrafficVolumeBeforeSplit when UeRc = 5 , 6, or 7

Calculation

```
AGGR(RABType[subString(LocalKey,0,9)=="PACKET_64"],  pmDlDchTrafficVolume-
BeforeSplit )
```

DL_Payload_PS_Interactive_FACH

The downlink payload in kbits carried on FACH (common Channels) for PS Interactive per RNC. Retransmissions are also counted as part of the traffic volume.

Calculation

```
AGGR(RABType, pmDlFachTrafficVolume )
```

GRAPHmultiLineSeparator

Special Control Field for Multi-Line Graphs

Calculation

```
""
```

© Copyright IBM Corp. 2008, 2009. All Rights Reserved.

Handover_Reduction_Factor_per_RNC

The Handover Reduction Factor (HRF) per RNC for speech is defined as the ratio of downlink code channel utilization for speech and the average number speech users servedper RNC. This metric shows how much of the radio resources (code and power) are used.

Calculation

```
AGGR(NodeB.Sector.UtranCell,Handover_Reduction_Factor)
```

k_PAYLOAD_DL_TOT

DL Total RNC payload traffic (Mbit), derived from FACH payload + DCH payload before diversity split.

Calculation

```
AGGR(RABType, k_PAYLOAD_DL_TOT)
```

k_PAYLOAD_UL_TOT

UL Total RNC payload traffic (Mbit), derived from RACH payload + DCH payload after diversity combining.

Calculation

```
AGGR(RABType, k_PAYLOAD_UL_TOT)
```

k_RAB_EST_FAIL

Number of RAB Establishment failures

Calculation

```
AGGR(RABType, k_RAB_EST_FAIL)
```

k_RAB_EST_FAIL_RATE

RAB Establishment failure rate %

Calculation

```
AGGR(RABType, k_RAB_EST_FAIL_RATE)
```

k_RAB_REL_FAIL

Number of failed RAB releases

Calculation

```
AGGR(RABType, k_RAB_REL_FAIL)
```

k_RAB_REL_FAIL_RATE

RAB release failure rate %

Calculation

```
AGGR(RABType, k_RAB_REL_FAIL_RATE)
```

MainProcessorLoadRNC

Main CPU load % (based on Operating System Enea function).

Calculation

```
AGGR(Equipment_RNC, MainProcessorLoadRNC_Equipment)
```

NUMDAYS

of days in Report

Calculation

```
DAYSINREPORT()
```

NUMHOURS

of hours in Summation Data

Calculation

PAYLOAD_CS_DL_MB

Payload traffic on downlink in megabyte (MB) for Circuit Switched RABs before macro diversity

Calculation

```
AGGR(NodeB.Sector.UtranCell, PAYLOAD_CS_DL_MB)
```

PAYLOAD_CS_UL_MB

Payload traffic on uplink in megabyte (MB) for Circuit Switched RABs before macro diversity

Calculation

```
AGGR(NodeB.Sector.UtranCell, PAYLOAD_CS_UL_MB)
```

PAYLOAD_PS_DL_MB

Payload traffic on downlink in megabyte (MB) for Packet Switched RABs before macro diversity

Calculation

```
AGGR(NodeB.Sector.UtranCell, PAYLOAD_PS_DL_MB)
```

© Copyright IBM Corp. 2008, 2009. All Rights Reserved.

PAYLOAD_PS_UL_MB

Payload traffic on uplink in megabyte (MB) for Packet Switched RABs before macro diversity

Calculation

```
AGGR(NodeB.Sector.UtranCell, PAYLOAD_PS_UL_MB)
```

PAYLOAD_TOT_DL_MB

Payload traffic on downlink in megabyte (MB) for Circuit Switched RABs before macro diversity

Calculation

```
AGGR(NodeB.Sector.UtranCell, PAYLOAD_TOT_DL_MB)
```

PAYLOAD_TOT_UL_MB

Payload traffic on uplink in megabyte (MB) for Circuit Switched RABs before macro diversity

Calculation

```
AGGR(NodeB.Sector.UtranCell, PAYLOAD_TOT_UL_MB)
```

pmDlTrafficVolumeCs12_MB

Payload traffic on downlink in megabyte (MB) for conversational/speech 12.2 kbps Circuit Switched RAB after macro diversity

Calculation

```
AGGR(NodeB.Sector.UtranCell, pmDlTrafficVolumeCs12) / (8.0 * 1024.0)
```

pmDlTrafficVolumeCs12Ps0_MB

Payload traffic on DL in megabyte (MB) for speech 12.2 kbps CS and PS 0/0 kbps multi RAB after macro diversity.

Calculation

```
AGGR(NodeB.Sector.UtranCell, pmDlTrafficVolumeCs12Ps0) / (8.0 * 1024.0)
```

pmDlTrafficVolumeCs12Ps64_MB

Payload traffic on DL in megabyte (MB) for speech 12.2 kbps CS and PS 64/64 kbps multi RAB after macro diversity.

Calculation

```
AGGR(NodeB.Sector.UtranCell, pmDlTrafficVolumeCs12Ps64) / (8.0 * 1024.0)
```

pmDlTrafficVolumeCs57_MB

Payload traffic on downlink in megabyte (MB) for streaming 57.6 kbps Circuit Switched RAB after macro diversity.

Calculation

```
AGGR(NodeB.Sector.UtranCell, pmDlTrafficVolumeCs57) / (8.0 * 1024.0)
```

pmDlTrafficVolumeCs64_MB

Payload traffic on downlink in megabyte (MB) for conversational 64 kbps Circuit Switched RAB after macro diversity

Calculation

```
AGGR(NodeB.Sector.UtranCell, pmDlTrafficVolumeCs64) / (8.0 * 1024.0)
```

pmDlTrafficVolumePs128_MB

Payload traffic on downlink in megabyte (MB) for Packet Switched 64/128 kbps RAB after macro diversity.

Calculation

```
AGGR(NodeB.Sector.UtranCell, pmDlTrafficVolumePs128) / (8.0 * 1024.0)
```

pmDlTrafficVolumePs384_MB

Payload traffic on downlink in megabyte (MB) for PS 64/384 RAB after macro diversity.

Calculation

```
AGGR(NodeB.Sector.UtranCell, pmDlTrafficVolumePs384) / (8.0 * 1024.0)
```

pmDlTrafficVolumePs64_MB

Payload traffic on downlink in megabyte (MB) for Packet Switched 64/64 kbps RAB after macro diversity.

Calculation

```
AGGR(NodeB.Sector.UtranCell, pmDlTrafficVolumePs64) / (8.0 * 1024.0)
```

pmDlTrafficVolumePsCommon_MB

Payload traffic on DL in megabyte (MB) for PS RAB on FACH/RACH. Retransmissions are also counted as part of the traffic volume.

Calculation

```
AGGR(NodeB.Sector.UtranCell, pmDlTrafficVolumePsCommon) / (8.0 * 1024.0)
```

© Copyright IBM Corp. 2008, 2009. All Rights Reserved.

pmUlTrafficVolumeCs12_MB

Payload traffic on uplink in megabyte (MB) for conversational/speech 12.2 kbps Circuit Switched RAB before macro diversity

Calculation

```
AGGR(NodeB.Sector.UtranCell, pmUlTrafficVolumeCs12) / (8.0 * 1024.0)
```

pmUlTrafficVolumeCs12Ps0_MB

Payload traffic on UL in megabyte (MB) for speech 12.2 kbps CS and PS 0/0 kbps multi RAB before macro diversity.

Calculation

```
AGGR(NodeB.Sector.UtranCell, pmUlTrafficVolumeCs12Ps0) / (8.0 * 1024.0)
```

pmUlTrafficVolumeCs12Ps64_MB

Payload traffic on UL in megabyte (MB) for speech 12.2 kbps CS and PS 64/64 kbps multi RAB before macro diversity.

Calculation

```
AGGR(NodeB.Sector.UtranCell, pmUlTrafficVolumeCs12Ps64) / (8.0 * 1024.0)
```

pmUlTrafficVolumeCs57_MB

Payload traffic on uplink in megabyte (MB) for streaming 57.6 kbps Circuit Switched RAB before macro diversity.

Calculation

```
AGGR(NodeB.Sector.UtranCell, pmUlTrafficVolumeCs57) / (8.0 * 1024.0)
```

pmUlTrafficVolumeCs64_MB

Payload traffic on uplink in megabyte (MB) for conversational 64 kbps Circuit Switched RAB before macro diversity.

Calculation

```
AGGR(NodeB.Sector.UtranCell, pmUlTrafficVolumeCs64) / (8.0 * 1024.0)
```

pmUlTrafficVolumePs128_MB

Payload traffic on uplink in megabyte (MB) for Packet Switched 64/128 kbps RAB before macro diversity

Calculation

```
AGGR(NodeB.Sector.UtranCell, pmUlTrafficVolumePs128) / (8.0 * 1024.0)
```

pmUlTrafficVolumePs384_MB

Payload traffic on uplink in megabyte (MB) for Packet Switched 64/384 kbps RAB before macro diversity.

Calculation

```
AGGR(NodeB.Sector.UtranCell, pmUlTrafficVolumePs384) / (8.0 * 1024.0)
```

pmUlTrafficVolumePs64_MB

Payload traffic on uplink in megabyte (MB) for Packet Switched 64/64 kbps RAB before macro diversity

Calculation

```
AGGR(NodeB.Sector.UtranCell, pmUlTrafficVolumePs64) / (8.0 * 1024.0)
```

pmUlTrafficVolumePsCommon_MB

Payload traffic on UL in megabyte (MB) for PS RAB on FACH/RACH. Retransmissions are also counted as part of the traffic volume.

Calculation

```
AGGR(NodeB.Sector.UtranCell, pmUlTrafficVolumePsCommon) / (8.0 * 1024.0)
```

POSITIONING_FAIL

Ue Positioning fail rate % (requested from the core network)

Calculation

```
(pmPositioningReqAtt - pmPositioningReqSucc) * 100.0 / pmPositioningReqAtt
```

RAB_EST_ATT_CS57

Number of Circuit Switched 57 kbps variable rate RAB establishment attempts.

Calculation

```
AGGR(RABType[LocalKey == "57_KBPS_CS_DATA_VARIABLE_RATE"], pmNoRabEstab-
lishAttempts)
```

RAB_EST_ATT_CS64

Number of Circuit Switched 64 kbps RAB establishment attempts.

Calculation

```
AGGR(RABType[LocalKey == "64_KBPS_CS_DATA_FIXED_RATE"], pmNoRabEstablishAt-
tempts)
```

© Copyright IBM Corp. 2008, 2009. All Rights Reserved.

RAB_EST_ATT_PS128

Number of Packet Switched 64/128 kbps RAB establishment attempts

Calculation

```
AGGR(RABType[LocalKey == "PACKET_64_128"], pmNoRabEstablishAttempts)
```

RAB_EST_ATT_PS384

Number of Packet Switched 64/384 kbps RAB establishment attempts

Calculation

```
AGGR(RABType[LocalKey == "PACKET_64_384"], pmNoRabEstablishAttempts)
```

RAB_EST_ATT_PS64

Number of Packet Switched 64/64 kbps RAB establishment attempts

Calculation

```
AGGR(RABType[LocalKey == "PACKET_64_64"], pmNoRabEstablishAttempts)
```

RAB_EST_ATT_PSCOMMON

Number of Packet Switched RAB establishment attempts on Common Channel (RACH and FACH)

Calculation

```
AGGR(RABType[LocalKey == "PACKET_RACH_FACH"], pmNoRabEstablishAttempts)
```

RAB_EST_ATT_SP_PS0

Number of Speech and PS0 multi-RAB establishment attempts.

Calculation

```
AGGR(RABType[LocalKey == "SPEECH_AND_PACKET_0_KBPS"], pmNoRabEstablishAt-
tempts)
```

RAB_EST_ATT_SP_PS64

Number of Speech and PS64 multi-RAB establishment attempts.

Calculation

```
AGGR(RABType[LocalKey == "SPEECH_AND_PACKET_64_KBPS"], pmNoRabEstablishAt-
tempts)
```

RAB_EST_ATT_SPEECH

Number of Speech RAB establishment attempts.

Calculation

```
AGGR(RABType[LocalKey == "SPEECH"], pmNoRabEstablishAttempts)
```

RAB_EST_FAIL_CS57

Circuit Switched 57 kbps variable rate RAB establishment fail rate %

Calculation

```
AGGR(RABType[LocalKey == "57_KBPS_CS_DATA_VARIABLE_RATE"],
k_RAB_EST_FAIL_RATE)
```

RAB_EST_FAIL_CS64

Circuit Switched 64 kbps RAB establishment fail rate %

Calculation

```
AGGR(RABType[LocalKey == "64_KBPS_CS_DATA_FIXED_RATE"],
k_RAB_EST_FAIL_RATE)
```

RAB_EST_FAIL_PS128

Packet Switched 64/128 kbps RAB establishment fail rate %

Calculation

```
AGGR(RABType[LocalKey == "PACKET_64_128"], k_RAB_EST_FAIL_RATE)
```

RAB_EST_FAIL_PS384

Packet Switched 64/384 kbps RAB establishment fail rate %

Calculation

```
AGGR(RABType[LocalKey == "PACKET_64_384"], k_RAB_EST_FAIL_RATE)
```

RAB_EST_FAIL_PS64

Packet Switched 64/64 kbps RAB establishment fail rate %

Calculation

```
AGGR(RABType[LocalKey == "PACKET_64_64"], k_RAB_EST_FAIL_RATE)
```

RAB_EST_FAIL_PSCOMMON

Packet Switched RAB establishment fail rate % on Common Channel (RACH and FACH)

Calculation

```
AGGR(RABType[LocalKey == "PACKET_RACH_FACH"], k_RAB_EST_FAIL_RATE)
```

© Copyright IBM Corp. 2008, 2009. All Rights Reserved.

RAB_EST_FAIL_SP_PS0

Speech and PS0 multi-RAB establishment fail rate %

Calculation

```
AGGR(RABType[LocalKey == "SPEECH_AND_PACKET_0_KBPS"], k_RAB_EST_FAIL_RATE)
```

RAB_EST_FAIL_SP_PS64

Speech and PS64 multi-RAB establishment fail rate %

Calculation

```
AGGR(RABType[LocalKey == "SPEECH_AND_PACKET_64KBPS"], k_RAB_EST_FAIL_RATE)
```

RAB_EST_FAIL_SPEECH

Speech RAB establishment fail rate %

Calculation

```
AGGR(RABType[LocalKey == "SPEECH"], k_RAB_EST_FAIL_RATE)
```

RAB_REL_ATT_CS57

Number of Circuit Switched 57 kbps variable rate RAB release attempts.

Calculation

```
AGGR(RABType[LocalKey == "57_KBPS_CS_DATA_VARIABLE_RATE"], pmNoRabRelease-
Attempts)
```

RAB_REL_ATT_CS64

Number of Circuit Switched 64 kbps RAB release attempts.

Calculation

```
AGGR(RABType[LocalKey == "64_KBPS_CS_DATA_FIXED_RATE"], pmNoRabReleaseAt-
tempts)
```

RAB_REL_ATT_PS128

Number of Packet Switched 64/128 kbps RAB release attempts

Calculation

```
AGGR(RABType[LocalKey == "PACKET_64_128"], pmNoRabReleaseAttempts)
```

RAB_REL_ATT_PS384

Number of Packet Switched 64/384 kbps RAB release attempts

Calculation

```
AGGR(RABType[LocalKey == "PACKET_64_384"], pmNoRabReleaseAttempts)
```

RAB_REL_ATT_PS64

Number of Packet Switched 64/64 kbps RAB release attempts

Calculation

```
AGGR(RABType[LocalKey == "PACKET_64_64"], pmNoRabReleaseAttempts)
```

RAB_REL_ATT_PSCOMMON

Number of Packet Switched RAB release attempts on Common Channel (RACH and FACH)

Calculation

```
AGGR(RABType[LocalKey == "PACKET_RACH_FACH"], pmNoRabReleaseAttempts)
```

RAB_REL_ATT_SP_PS0

Number of Speech and PS0 multi-RAB release attempts.

Calculation

```
AGGR(RABType[LocalKey == "SPEECH_AND_PACKET_0_KBPS"], pmNoRabReleaseAt-
tempts)
```

RAB_REL_ATT_SP_PS64

Number of Speech and PS64 multi-RAB release attempts.

Calculation

```
AGGR(RABType[LocalKey == "SPEECH_AND_PACKET_64_KBPS"], pmNoRabReleaseAt-
tempts)
```

RAB_REL_ATT_SPEECH

Number of Speech RAB release attempts.

Calculation

```
AGGR(RABType[LocalKey == "SPEECH"], pmNoRabReleaseAttempts)
```

RAB_REL_FAIL_CS57

Circuit Switched 57 kbps variable rate RAB release fail rate %

Calculation

```
AGGR(RABType[LocalKey == "57_KBPS_CS_DATA_VARIABLE_RATE"],
k_RAB_REL_FAIL_RATE)
```

© Copyright IBM Corp. 2008, 2009. All Rights Reserved.

RAB_REL_FAIL_CS64

Circuit Switched 64 kbps RAB release fail rate %

Calculation

```
AGGR(RABType[LocalKey == "64_KBPS_CS_DATA_FIXED_RATE"],
k_RAB_REL_FAIL_RATE)
```

RAB_REL_FAIL_PS128

Packet Switched 64/128 kbps RAB release fail rate %

Calculation

```
AGGR(RABType[LocalKey == "PACKET_64_128"], k_RAB_REL_FAIL_RATE)
```

RAB_REL_FAIL_PS384

Packet Switched 64/384 kbps RAB release fail rate %

Calculation

```
AGGR(RABType[LocalKey == "PACKET_64_384"], k_RAB_REL_FAIL_RATE)
```

RAB_REL_FAIL_PS64

Packet Switched 64/64 kbps RAB release fail rate %

Calculation

```
AGGR(RABType[LocalKey == "PACKET_64_64"], k_RAB_REL_FAIL_RATE)
```

RAB_REL_FAIL_PSCOMMON

Packet Switched RAB release fail rate % on Common Channel (RACH and FACH)

Calculation

```
AGGR(RABType[LocalKey == "PACKET_RACH_FACH"], k_RAB_REL_FAIL_RATE)
```

RAB_REL_FAIL_SP_PS0

Speech and PS0 multi-RAB release fail rate %

Calculation

```
AGGR(RABType[LocalKey == "SPEECH_AND_PACKET_0_KBPS"], k_RAB_REL_FAIL_RATE)
```

RAB_REL_FAIL_SP_PS64

Speech and PS64 multi-RAB release fail rate %

Calculation

```
AGGR(RABType[LocalKey == "SPEECH_AND_PACKET_64KBPS"], k_RAB_REL_FAIL_RATE)
```

Updated: 2009-07-22

RAB_REL_FAIL_SPEECH

Speech RAB release fail rate %

Calculation

```
AGGR(RABType[LocalKey == "SPEECH"], k_RAB_REL_FAIL_RATE)
```

RNCOutRelocationSuccessRate

Number of successful outgoing relocation from the RNC %

Calculation

```
NRNTOHRSUCC * 100.0 / NRNTSRRTOT
```

RNCRelocationSuccessRate

Successful incoming relocation to the RNC in procent

Calculation

```
NRNTIHRSUCC * 100.0 / NRNTSRRTOT
```

SuccOutUMTSGSMHoRNCRate

Successful outgoing UMTS to GSM handovers from the RNC in Procent

Calculation

```
NRNTORGSUCC * 100.0 / NRNTRRRGTOT
```

UL_Payload_PS_Interactive_DCH

The uplink payload in kbits carried on DCH after combining for PS Interactive per RNC, sum of the pmUlDchTrafficVolumeAfterComb when UeRc = 5 , 6, or 7

Calculation

```
AGGR(RABType[subString(LocalKey,0,9)=="PACKET_64"], pmUlDchTrafficVol-
umeAfterComb )
```

UL_Payload_PS_Interactive_RACH

The uplink payload in kbits carried on RACH for PS Interactive per RNC, aggregate pmUlRachTrafficVolume to RNC when UeRc = 4

Calculation

```
AGGR(RABType[LocalKey == "PACKET_RACH_FACH"],pmUlRachTrafficVolume)
```

Uplink_CS_64_BLER

Transport block error rate after combining at RNC in uplink for CS 64 (UeRc = 3).

© Copyright IBM Corp. 2008, 2009. All Rights Reserved.

Calculation

```
AGGR(RABType[LocalKey == "64_KBPS_CS_DATA_FIXED_RATE"],Uplink_BLER)
```

Uplink_CS_Streaming_BLER

Transport block error rate after combining at RNC in uplink for CS 57 (UeRc = 8).

Calculation

```
AGGR(RABType[LocalKey == "57_KBPS_CS_DATA_VARIABLE_RATE"],Uplink_BLER)
```

Uplink_PS_Interactive_BLER

Transport block error rate after combining at RNC in uplink for PS interactive (UeRc = 4, 5, 6, and 7). The user may choose to track the BLER per PS interactive type or collectively.

Calculation

```
AGGR(RABType[subString(LocalKey,0,6)=="PACKET"],Uplink_BLER)
```

Uplink_PS_Streaming_16_64_and_PS8_BLER

Transport block error rate after combining at RNC in uplink for PS streaming+ Packet 8kbps (UeRc = 13).

Calculation

```
AGGR(RABType[LocalKey == "PS_STREAMING_16_64_PACKET_8KBPS"],Uplink_BLER)
```

Uplink_Speech_and_PS64_BLER

Transport block error rate after combining at RNC in uplink for PS interactive (UeRc = 10).

Calculation

```
AGGR(RABType[LocalKey == "SPEECH_AND_PACKET_64_KBPS"],Uplink_BLER)
```

Uplink_Speech_BLER

The transport block error rate after combining at RNC in uplink for speech (UeRc = 2).

Calculation

```
AGGR(RABType[LocalKey == "SPEECH"],Uplink_BLER)
```

RNC Peg Counts

The following is a list of peg counts for the RNC entity.

activeQueueMgmt

Determines if active queue management (early congestion detection and selective dropping of packets) is turned on or off for all PS Interactive RABs. { OnOffVals, Default= OFF }

Data Source

Bulk CM

Source Section

RabHandling

adjustmentPeriod

System constant. { long, Default=8 }

Data Source

Bulk CM

Source Section

PowerControl

adjustmentRatio

System constant. { long, Default=0 }

Data Source

Bulk CM

Source Section

PowerControl

aliasPlmnIdentities

List of alias PLMN identities to the PLMN id of this RNC (defined in RncFunction). Defines allowed roamers between UTRAN networks to support shared networks. { sequence<PlmnIdentity,30>, Default = empty, Default= }

Data Source

Bulk CM

Source Section

RncFunction

allow384HsRab

Switch to enable/disable the use of UL 384/HS kbps RAB in the RNC. { BooleanVals, Default= FALSE }

© Copyright IBM Corp. 2008, 2009. All Rights Reserved.

Data Source

Bulk CM

Source Section

RncFunction

allowSwitchToCommon

System constant. { long, Default=1 }

Data Source

Bulk CM

Source Section

ChannelSwitching

altitude

Altitude of the UE reference position, independent of whether the pre-estimate is successful or the RNC instead uses a fall-back position. Altitudes larger than 32767 meters are represented as 32767 meters. { long, Range = 0..32767, Default=Mandatory }

Data Source

Bulk CM

Source Section

AgpsPositioning

amountOfReporting1a

System constant. { long, Default=7 }

Data Source

Bulk CM

Source Section

UeMeasControl

amountOfReporting1c

System constant. { long, Default=7 }

Data Source

Bulk CM

Source Section

UeMeasControl

asCellSyncInfoRepInd

System constant. { long, Default=1 }

Data Source

Bulk CM

Source Section

UeMeasControl

bandwidthMargin

System constant. { long, Default=90 }

Data Source

Bulk CM

Source Section

ChannelSwitching

bandwidthMarginUl

UL throughput threshold defining a high utilisation of the radio bearer

Data Source

Bulk CM

Source Field

es:bandwidthMarginUl

Source Section

ChannelSwitching

bcchModCycleLength

System constant. { long, Default=9 }

© Copyright IBM Corp. 2008, 2009. All Rights Reserved.

Data Source

Bulk CM

Source Section

Paging

betaPrachControlTf0

System constant. { long, Default=11 }

Data Source

Bulk CM

Source Section

PowerControl

betaPrachControlTf1

System constant. { long, Default=10 }

Data Source

Bulk CM

Source Section

PowerControl

betaPrachDataTf0

System constant. { long, Default=15 }

Data Source

Bulk CM

Source Section

PowerControl

betaPrachDataTf1

System constant. { long, Default=15 }

Data Source

Bulk CM

Source Section

PowerControl

blerCorrectionFactor

System constant. { long, Default=5 }

Data Source

Bulk CM

Source Section

PowerControl

cBackOff

The purpose of this constant is to back off the open loop power control estimate to a conservative starting point. { long, Range = -60..60, Default=0 }

Data Source

Bulk CM

Source Section

PowerControl

cchWaitCuT

Waiting timer for cell update

Data Source

Bulk CM

Source Field

es:cchWaitCuT

Source Section

Rcs

cCM

System constant. { long, Default=4 }

© Copyright IBM Corp. 2008, 2009. All Rights Reserved.

Data Source

Bulk CM

Source Section

PowerControl

cellListAtRemovalDelay

System constant. { long, Default=0 }

Data Source

Bulk CM

Source Section

Handover

ciphering

Indicates whether ciphering is used or not. { long, Range = 0..1, Default=1 }

Data Source

Bulk CM

Source Section

SecurityHandling

cipheringGuardTime

System constant. { long, Default=80 }

Data Source

Bulk CM

Source Section

SecurityHandling

cNbifho

Factor used to take into account the non-blind inter-frequency handover margin. { long, Range = -50..150, Default=10 }

Data Source

Bulk CM

Source Section

PowerControl

cnDrxCycleLengthCs

Core Network DRX cycle length coefficient (k) for UEs in idle mode, circuit switched. { long, Range = 6..9, Default=6 }

Data Source

Bulk CM

Source Section

Paging

cnDrxCycleLengthPs

Core Network DRX cycle length coefficient (k) for UEs in idle mode, packet switched. { long, Range = 6..9, Default=7 }

Data Source

Bulk CM

Source Section

Paging

cnhhoSupp

Defines if the feature CN Hard Handover is activated in the RNC

Data Source

Bulk CM

Source Field

es:cnhhoSupp

Source Section

Handover

© Copyright IBM Corp. 2008, 2009. All Rights Reserved.

cnInformation

System constant. { long, Default=2 }

Data Source

Bulk CM

Source Section

Sid

codePowerPeriod

System constant. { long, Default=200 }

Data Source

Bulk CM

Source Section

PowerControl

comprModeRetryInterv

System constant. { long, Default=5 }

Data Source

Bulk CM

Source Section

Handover

confidence

Confidence of the UE reference position. This value is only used when the pre-estimate is successful, { long, Range = 0..100, Default=Mandatory }

Data Source

Bulk CM

Source Section

AgpsPositioning

counterAlarmCeaseLimit

Sets the condition for ceasing a minor alarm sent when the limit for maximum number of allowed counter reads is exceeded. The value is in percentage of maximum number of allowed counter reads. { long, Range = 70..99, Default=95 }

Data Source

Bulk CM

Source Section

RncFunction

counterAlarmThreshold

Level at which a warning alarm for too many counter readings shall be issued. { long, Range = 0..100, Default=80 }

Data Source

Bulk CM

Source Section

RncFunction

counterWarningAlarmCeaseLimit

Sets the condition for ceasing a warning alarm. The value is a delta value in percentage. The alarm will be cleared when the number of counter reads is below the warning limit minus this delta value. { long, Range = 1..20, Default=5 }

Data Source

Bulk CM

Source Section

RncFunction

coverageTimer

Time during which the power is allowed to be high before a downswitch (DCH to DCH) is issued. { long, Range = 0..100, Default=10 }

Data Source

Bulk CM

© Copyright IBM Corp. 2008, 2009. All Rights Reserved.

Source Section

ChannelSwitching

cPO

A constant parameter to set the UL DPCCH power offset to a conservative level. { long, Range = -30..30, Default=0 }

Data Source

Bulk CM

Source Section

PowerControl

ctrFileSize

Size of each CTR recording file. { long, Range = 0..60000, Default=5000 }

Data Source

Bulk CM

Source Section

RncFunction

dchRcLostT

Value in deciseconds for a timer that is started when all radio links in a connection is lost. At time-out, the radio connection is considered lost.

Data Source

Bulk CM

Source Field

es:dchRcLostT

Source Section

Rcs

deltaSir1

System constant. { long, Default=10 }

Data Source

Bulk CM

Source Section

PowerControl

deltaSir2

System constant. { long, Default=10 }

Data Source

Bulk CM

Source Section

PowerControl

deltaSirAfter1

System constant. { long, Default=5 }

Data Source

Bulk CM

Source Section

PowerControl

deltaSirAfter2

System constant. { long, Default=5 }

Data Source

Bulk CM

Source Section

PowerControl

dlInitSirTarget

Required DL Initial SIR target for all RABs. { long, Range = -82..173, Default=41 }

Data Source

Bulk CM

© Copyright IBM Corp. 2008, 2009. All Rights Reserved.

Source Section

PowerControl

dlPcMethod

Selects the DL power control method at establishment of the radio connection. { string, Default= BALANCING }

Data Source

Bulk CM

Source Section

PowerControl

dlRlcBufUpswitch

Downlink threshold for channel switching from FACH/RACH to dedicated channel. { long, Range = 0..2000, Default=500 }

Data Source

Bulk CM

Source Section

ChannelSwitching

dlRlcBufUpswitchMrab

Downlink threshold of the RLC buffer load, used to issue an upswitch request (from "Speech + PS 0/0" to Speech + PS 64/64). { long, Range = 0..20, Default=0 }

Data Source

Bulk CM

Source Section

ChannelSwitching

dlSfLimitTimer

System constant. { long, Default=20 }

Data Source

Bulk CM

Source Section

PowerControl

doStep

Downlink Offset step size. { long, Range = 0..10, Default=1 }

Data Source

Bulk CM

Source Section

CchFrameSynch

downswitchPwrMargin

Margin, in relation to maximum allowed code power, which indicates a high power usage. { long, Range = 0..20, Default=2 }

Data Source

Bulk CM

Source Section

ChannelSwitching

downswitchThreshold

Threshold for channel switching from dedicated channel to FACH/RACH. { long, Range = 0..32, Default=0 }

Data Source

Bulk CM

Source Section

ChannelSwitching

downswitchTimer

Timer for channel switching from dedicated channel to FACH/RACH. { long, Range = 0..1000, Default=10 }

Data Source

Bulk CM

© Copyright IBM Corp. 2008, 2009. All Rights Reserved.

Source Section

ChannelSwitching

downswitchTimerSp

Time not including data transmission, after which the packet part of the multi RAB "Speech 12.2 kbps + Packet 64/64 kbps" is released. { long, Range = 0..180, Default=60 }

Data Source

Bulk CM

Source Section

ChannelSwitching

downswitchTimerThreshold

Timer threshold to achieve hysteresis for channel switching from dedicated channel to FACH/RACH. { long, Range = 0..64, Default=0 }

Data Source

Bulk CM

Source Section

ChannelSwitching

downswitchTimerUp

Time, not including data transmission, after which the packet part of the multi RAB "UDI+8/8" (Cs Data 64kbps + Packet 8kbps) is released. { long, Range = 0..180, Default=60 }

Data Source

Bulk CM

Source Section

ChannelSwitching

dsCellSyncInfoRepInd

System constant. { long, Default=1 }

Data Source

Bulk CM

Source Section

UeMeasControl

dscpValuePsStreaming

DSCP (DiffServ Code Point) value for the PS Streaming RAB Type. { long, Range = 0..63, Default=18 }

Data Source

Bulk CM

Source Section

RabHandling

dto

Downlink Transport delay Offset. Part of the Downlink Offset (DO). { long, Range = 1..200, Default=10 }

Data Source

Bulk CM

Source Section

CchFrameSynch

ecNoPcpichDefault

The default value to be used in power calculations for Ec divided by No. { long, Range = -20..-10, Default=-16 }

Data Source

Bulk CM

Source Section

PowerControl

elevationThreshold

Threshold for satellite elevation. The satellites that are below the elevation threshold will not be used. { long, Range = 0..90, Default=5 }

Data Source

Bulk CM

© Copyright IBM Corp. 2008, 2009. All Rights Reserved.

Source Section

AgpsPositioning

emergencyCallRedirect

Turns on/off the immediate reject of RRC Connection Requests with "establishment cause" set to "emergency between UTRAN networks to support shared networks. { OnOffVals, Default= OFF }

Data Source

Bulk CM

Source Section

RncFunction

enabledPositioningFeatures

Enables and disables the different UE positioning features, which are optional. { string, Default= NONE }

Data Source

Bulk CM

Source Section

UePositioning

fddGsmHOSupp

Indicates if the RNC supports inter-RAT HO (Inter Radio Access Technology Handover). { BooleanVals, Default= FALSE }

Data Source

Bulk CM

Source Section

Handover

fddIfhoSupp

Indicates if the RNC supports IFHO. { BooleanVals, Default= FALSE }

Data Source

Bulk CM

Source Section

Handover

filterCoeff4_2b

Coefficient for layer 3 filtering before inter-frequency reporting evaluation, for measurement 4 event 2b. { long, Range = 0..9, 11, 13, 15, 17, 19, Default=2 }

Data Source

Bulk CM

Source Section

UeMeasControl

filterCoeff6

Coefficient for layer 3 filtering before UE internal measurement reporting evaluation, for event 6a and 6b. { long, Range = 0..9, Default=19 }

Data Source

Bulk CM

Source Section

UeMeasControl

filterCoefficient1

Coefficient for layer 3 filtering before intra-frequency reporting evaluation. { long, Range = 0..9, Default=2 }

Data Source

Bulk CM

Source Section

UeMeasControl

filterCoefficient2

Coefficient for layer 3 filtering before inter-frequency measurement reporting evaluation. { long, Range = 0..9, Default=2 }

Data Source

Bulk CM

© Copyright IBM Corp. 2008, 2009. All Rights Reserved.

Source Section

UeMeasControl

filteringCoefficient

System constant. { long, Default=6 }

Data Source

Bulk CM

Source Section

ChannelSwitching

fixedPowerDl

Fixed DL power used in fixed DL PC method. The power value is expressed relative to the PCPICH power. { long, Range = 1..101, Default=65 }

Data Source

Bulk CM

Source Section

PowerControl

fixedRefPower

Fixed DL reference power used in fixed balancing DL PC method, expressed relative to the PCPICH power. { long, Range = 1..101, Default=65 }

Data Source

Bulk CM

Source Section

PowerControl

gainFactorCExtraHigh

System constant. { long, Default=5 }

Data Source

Bulk CM

Source Section

PowerControl

gainFactorCHigh

System constant. { long, Default=8 NoNotification}

Data Source

Bulk CM

Source Section

PowerControl

gainFactorCLow

System constant. { long, Default=11 NoNotification}

Data Source

Bulk CM

Source Section

PowerControl

gainFactorDExtraHigh

System constant. { long, Default=15 }

Data Source

Bulk CM

Source Section

PowerControl

gainFactorDHigh

System constant. { long, Default=15 NoNotification}

Data Source

Bulk CM

Source Section

PowerControl

© Copyright IBM Corp. 2008, 2009. All Rights Reserved.

gainFactorDLow

System constant. { long, Default=15 NoNotification}

Data Source

Bulk CM

Source Section

PowerControl

gpehDataLevel

Determines whether the entire protocol message of the selected GPEH external events should be recorded, or only the header data of the selected external events. { string, Default= HEADER_DATA_ONLY }

Data Source

Bulk CM

Source Section

RncFunction

gpehFileSize

Specifies the size of each GPEH file. { long, Range = 0..50000, Default=500 }

Data Source

Bulk CM

Source Section

RncFunction

gpehStorageSize

System constant. { long, Default=50000 }

Data Source

Bulk CM

Source Section

RncFunction

gsmAmountPropRepeat

Max number of repeated proposals (i.e. not including the first proposal) of GSM cell(s) for handover based on the same measurement report. { long, Range = 0..25, Default=4 }

Data Source

Bulk CM

Source Section

Handover

gsmFilterCoefficient3

Coefficient for layer 3 filtering of GSM quality before inter-RAT reporting evaluation. { long, Range =0..9,11,13,15,17,19, Default=1 }

Data Source

Bulk CM

Source Section

UeMeasControl

gsmPropRepeatInterval

Minimum time interval between proposals of the same GSM cell for handover based on the same measurement report. { long, Range = 0..25, Default=5 }

Data Source

Bulk CM

Source Section

Handover

gsmThresh3a

Threshold for event 3a for GSM. Range is valid for GSM carrier RSSI. { long, Range = -115..0, Default=-102 }

Data Source

Bulk CM

Source Section

UeMeasControl

© Copyright IBM Corp. 2008, 2009. All Rights Reserved.

gsmTimeDiffRepInd

System constant. { long, Default=0 }

Data Source

Bulk CM

Source Section

UeMeasControl

hoTypeDrncBand1

Indicates for frequency band 1 for DRNCs if GSM HO, IFHO or nothing shall be attempted, in case both GSM HO and IFHO are possible. { string, Default= GSM_PREFERRED }

Data Source

Bulk CM

Source Section

Handover

hoTypeDrncBand10

Indicates for frequency band 10 for DRNCs if GSM HO, IFHO or nothing shall be attempted, in case both GSM HO and IFHO are possible. { string, Default= GSM_PREFERRED }

Data Source

Bulk CM

Source Section

Handover

hoTypeDrncBand11

Indicates for frequency band 11 for DRNCs if GSM HO, IFHO or nothing shall be attempted, in case both GSM HO and IFHO are possible. { string, Default= GSM_PREFERRED }

Data Source

Bulk CM

Source Section

Handover

hoTypeDrncBand12

Indicates for frequency band 12 for DRNCs if GSM HO, IFHO or nothing shall be attempted, in case both GSM HO and IFHO are possible. { string, Default= GSM_PREFERRED }

Data Source

Bulk CM

Source Section

Handover

hoTypeDrncBand13

Indicates for Ericsson internal frequency band 13 for DRNCs if GSM HO, IFHO or nothing shall be attempted, in case both GSM HO and IFHO are possible. { string, Default= GSM_PREFERRED }

Data Source

Bulk CM

Source Section

Handover

hoTypeDrncBand14

Indicates for Ericsson internal frequency band 14 for DRNCs if GSM HO, IFHO or nothing shall be attempted, in case both GSM HO and IFHO are possible. { string, Default= GSM_PREFERRED }

Data Source

Bulk CM

Source Section

Handover

hoTypeDrncBand15

Indicates for Ericsson internal frequency band 15 for DRNCs if GSM HO, IFHO or nothing shall be attempted, in case both GSM HO and IFHO are possible. in case both GSM HO and IFHO are possible. { string, Default= GSM_PREFERRED }

Data Source

Bulk CM

© Copyright IBM Corp. 2008, 2009. All Rights Reserved.

Source Section

Handover

hoTypeDrncBand16

Indicates for Ericsson internal frequency band 16 for DRNCs if GSM HO, IFHO or nothing shall be attempted, in case both GSM HO and IFHO are possible. { string, Default= GSM_PREFERRED }

Data Source

Bulk CM

Source Section

Handover

hoTypeDrncBand17

Indicates for Ericsson internal frequency band 17 for DRNCs if GSM HO, IFHO or nothing shall be attempted, in case both GSM HO and IFHO are possible. { string, Default= GSM_PREFERRED }

Data Source

Bulk CM

Source Section

Handover

hoTypeDrncBand2

Indicates for frequency band 2 for DRNCs if GSM HO, IFHO or nothing shall be attempted, in case both GSM HO and IFHO are possible. { string, Default= GSM_PREFERRED }

Data Source

Bulk CM

Source Section

Handover

hoTypeDrncBand3

Indicates for frequency band 3 for DRNCs if GSM HO, IFHO or nothing shall be attempted, in case both GSM HO and IFHO are possible. { string, Default= GSM_PREFERRED }

Data Source

Bulk CM

Source Section

Handover

hoTypeDrncBand4

Indicates for frequency band 4 for DRNCs if GSM HO, IFHO or nothing shall be attempted, in case both GSM HO and IFHO are possible. { string, Default= GSM_PREFERRED }

Data Source

Bulk CM

Source Section

Handover

hoTypeDrncBand5

Indicates for frequency band 5 for DRNCs if GSM HO, IFHO or nothing shall be attempted, in case both GSM HO and IFHO are possible. { string, Default= GSM_PREFERRED }

Data Source

Bulk CM

Source Section

Handover

hoTypeDrncBand6

Indicates for frequency band 6 for DRNCs if GSM HO, IFHO or nothing shall be attempted, in case both GSM HO and IFHO are possible. { string, Default= GSM_PREFERRED }

Data Source

Bulk CM

Source Section

Handover

hoTypeDrncBand7

Indicates for frequency band 7 for DRNCs if GSM HO, IFHO or nothing shall be attempted, in case both GSM HO and IFHO are possible. { string, Default= GSM_PREFERRED }

© Copyright IBM Corp. 2008, 2009. All Rights Reserved.

Data Source

Bulk CM

Source Section

Handover

hoTypeDrncBand8

Indicates for frequency band 8 for DRNCs if GSM HO, IFHO or nothing shall be attempted, in case both GSM HO and IFHO are possible. { string, Default= GSM_PREFERRED }

Data Source

Bulk CM

Source Section

Handover

hoTypeDrncBand9

Indicates for frequency band 9 for DRNCs if GSM HO, IFHO or nothing shall be attempted, in case both GSM HO and IFHO are possible. { string, Default= GSM_PREFERRED }

Data Source

Bulk CM

Source Section

Handover

hsCellChangeAllowed

Overall On/Off switch for serving HS-DSCH cell change. { BooleanVals, Default= FALSE }

Data Source

Bulk CM

Source Section

RncFunction

hsCellChangeCfnOffset

System constant. { long, Default=100 }

Data Source

Bulk CM

Source Section

RncFunction

hsdschInactivityTimer

Timer for sending of IU RELEASE REQUEST message to the CN for UE connections in RAB state PS Interactive 64/HS - HS-DSCH. { long, Range = 1..255, Default=10, 7200, }

Data Source

Bulk CM

Source Section

ChannelSwitching

hsDschRcLostT

Value in deciseconds for RCS timer for supervision of UL synch of RLS containing the serving HS-DSCH Radio Link

Data Source

Bulk CM

Source Field

es:hsDschRcLostT

Source Section

Rcs

hsHysteresis1d

Sets the Event 1D hysteresis value specific for HS connections { long, Range = 0..75, Default=10 }

Data Source

Bulk CM

Source Section

UeMeasControl

© Copyright IBM Corp. 2008, 2009. All Rights Reserved.

hsMacdSwitchTimeOffset

System constant. { long, Default=5 }

Data Source

Bulk CM

Source Section

RncFunction

hsOnlyBestCell

RNC wide switch for selecting only the best cell for HS. { BooleanVals, Default= TRUE }

Data Source

Bulk CM

Source Section

RncFunction

hsQualityEstimate

Indicates whether it is CPICH Ec/N0 or CPICH RSCP that should be used for indicating "best cell" for HSDSCH cell selection and HS-DSCH cell change { string, Default= CPICH_RSCP }

Data Source

Bulk CM

Source Section

UeMeasControl

hsTimeToTrigger1d

Sets the Event 1D Time to Trigger value specific for HS connections { long, Range =, Default=640 }

Data Source

Bulk CM

Source Section

UeMeasControl

hyst4_2b

Hysteresis for measurement 4 event 2b. { long, Range = 0..75, Default=10 }

Data Source

Bulk CM

Source Section

UeMeasControl

hysteresis1a

Hysteresis used in addition-window in evaluation criteria for event 1a to avoid ping pong effects. Used by UE functions for intra-frequency measurement reporting in CELL_DCH. { long, Range = 0..15, Default=0 }

Data Source

Bulk CM

Source Section

UeMeasControl

hysteresis1b

Hysteresis used in the drop window in evaluation criteria for event type 1b. Used by UE functions for intrafrequency measurement reporting in CELL_DCH. { long, Range = 0..15, Default=0 }

Data Source

Bulk CM

Source Section

UeMeasControl

hysteresis1c

Used by UE functions for intra-frequency measurement reporting (in CELL_DCH). Hysteresis used in replacement threshold in evaluation criteria for event 1c to avoid ping pong effects. { long, Range = 0..15, Default=2 }

Data Source

Bulk CM

© Copyright IBM Corp. 2008, 2009. All Rights Reserved.

Source Section

UeMeasControl

hysteresis1d

Used by UE functions for intra-frequency measurement reporting (in CELL_DCH). Hysteresis used in dropwindow in evaluation criteria for event type 1d. { long, Range = 0..15, Default=15 }

Data Source

Bulk CM

Source Section

UeMeasControl

hysteresis2d

Hysteresis for event 2d. { long, Range = 0..29, Default=0 }

Data Source

Bulk CM

Source Section

UeMeasControl

hysteresis2f

Hysteresis for event 2f. { long, Range = 0..29, Default=0 }

Data Source

Bulk CM

Source Section

UeMeasControl

hysteresis3a

Hysteresis for event 3a. { long, Range = 0..15, Default=0 }

Data Source

Bulk CM

Source Section

UeMeasControl

hysteresisSiUpdate

System constant. { long, Default=30 }

Data Source

Bulk CM

Source Section

PowerControl

ifhoAmountPropRepeat

Maximum number of repeated proposals of non-used frequency cell(s) for handover based on the same measurement report. { long, Range = 0..25, Default=4 }

Data Source

Bulk CM

Source Section

Handover

ifhoPropRepeatInterval

Minimum time interval between proposals of the same non-used frequency cell for handover based on the same measurement report. { long, Range = 0..25, Default=5 }

Data Source

Bulk CM

Source Section

Handover

inactivityTimer

Timer for sending of IU RELEASE REQUEST message to the CN for UEs in state CELL_FACH. { long, Range = 1..1440, Default=30 }

Data Source

Bulk CM

© Copyright IBM Corp. 2008, 2009. All Rights Reserved.

Source Section

ChannelSwitching

inactivityTimerDch

System constant. { long, Default=30 }

Data Source

Bulk CM

Source Section

ChannelSwitching

initialCellListDelay

System constant. { long, Default=0 }

Data Source

Bulk CM

Source Section

Handover

initShoPowerParam

Correction of initial downlink power at soft handover RL setup. { long, Range = -20..20, Default=-2 }

Data Source

Bulk CM

Source Section

PowerControl

interFreqCnhhoPenaltyEcno

Defines how much penalty shall be given to a non-Iur external UTRAN cell compared to a normal interfrequency cell during Ec/No evaluation.

Data Source

Bulk CM

Source Field

es:interFreqCnhhoPenaltyEcno

Source Section

Handover

interFreqCnhhoPenaltyRscp

Defines how much penalty shall be given to a non-Iur external UTRAN cell compared to a normal interfrequency cell during RSCP evaluation.

Data Source

Bulk CM

Source Field

es:interFreqCnhhoPenaltyRscp

Source Section

Handover

intraFreqCnhhoPenalty

Defines how much penalty shall be given to a non-Iur external UTRAN cell compared to a normal intrafrequency cell. Dependencies: The value to chose depends on the setting of the parameter measQuantity1 (which indicate if there are Ec/No or RSCP measurements which should be used).

Data Source

Bulk CM

Source Field

es:intraFreqCnhhoPenalty

Source Section

Handover

intraFreqCnhhoWeight

Defines the weight of the radio links in the active set, when comparing them to an intra-frequency CN Hard Handover candidate. intraFreqCnhhoWeight=0 means that only the best cell in AS is considered, intraFreqCnhhoWeight>0 means that all radio links in the active set are considered, while intraFreqCnhhoWeight=10 means that all radio links in the active set are given equal importance.

© Copyright IBM Corp. 2008, 2009. All Rights Reserved.

Data Source

Bulk CM

Source Field

es:intraFreqCnhhoWeight

Source Section

Handover

itp

System constant. { long, Default=0 }

Data Source

Bulk CM

Source Section

PowerControl

loadSharingDirRetryEnabled

Indicates whether the Load Sharing via Directed Retry to GSM function has been enabled in the RNC. { BooleanVals, Default= FALSE }

Data Source

Bulk CM

Source Section

RncFunction

loadSharingRrcEnabled

Indicates whether the Inter-Frequency Load Sharing function has been enabled in the RNC. { BooleanVals, Default= FALSE }

Data Source

Bulk CM

Source Section

RncFunction

loadSharingThreshold

System constant. { long, Default=20 }

Data Source

Bulk CM

Source Section

RncFunction

maxActiveSet

Maximum number of cells in active set. { long, Range = 2..4, Default=3 }

Data Source

Bulk CM

Source Section

Handover

maxAdjustmentStep

System constant. { long, Default=1 }

Data Source

Bulk CM

Source Section

PowerControl

maxBufferTime

System constant. { long, Default=10 }

Data Source

Bulk CM

Source Section

Handover

© Copyright IBM Corp. 2008, 2009. All Rights Reserved.

maxGsmMonSubset

Maximum number of GSM cells that the UE shall measure on. { long, Range = 1..32, Default=32 }

Data Source

Bulk CM

Source Section

Handover

maxIefMonSubset

Maximum number of inter-frequency cells that the UE shall measure on. { long, Range = 1..32, Default=32 }

Data Source

Bulk CM

Source Section

Handover

maxNumberRepCells1a

System constant. { long, Default=3 }

Data Source

Bulk CM

Source Section

UeMeasControl

maxNumberRepCells1c

System constant. { long, Default=3 }

Data Source

Bulk CM

Source Section

UeMeasControl

maxNumberRepCells1d

System constant. { long, Default=1 }

Data Source

Bulk CM

Source Section

UeMeasControl

maxNumberRepCells3a

System constant. { long, Default=4 }

Data Source

Bulk CM

Source Section

UeMeasControl

maxNumbRepCells4_2b

System constant. { long, Default=2 }

Data Source

Bulk CM

Source Section

UeMeasControl

maxSohoListSubset

System constant. { long, Default=32 }

Data Source

Bulk CM

Source Section

Handover

mcc_CM

Mobile Country Code, MCC. It is a part of the PLMN Id (Ref. 3GPP TS 23.003).

© Copyright IBM Corp. 2008, 2009. All Rights Reserved.

Data Source

Bulk CM

Source Field

un:mcc

Source Section

RncFunction

measQuantity1

Used by UE functions for intra-frequency measurements (in CELL_DCH). Quantity to measure for the chosen mode. The value of this attribute will set the message data CPICH_Ec/No or CPICH_RSCP accordingly. { string, Default= CPICH_EC_NO }

Data Source

Bulk CM

Source Section

UeMeasControl

mnc_CM

Mobile Network Code, MNC. It is a part of the PLMN Id (Ref. 3GPP TS 23.003).

Data Source

Bulk CM

Source Field

un:mnc

Source Section

RncFunction

mncLength

The length of the MNC part of the PLMN identity used in the radio network. { long, Range = 2..3, Default=2 }

Data Source

Bulk CM

Source Section

RncFunction

msCellSyncInfoRepInd

System constant. { long, Default=1 }

Data Source

Bulk CM

Source Section

UeMeasControl

multiRabSp0Available

Controls whether RAB Establishment and Channel Switching are allowed to switch to SP0 or not. { long, Range = 0..1, Default=0 }

Data Source

Bulk CM

Source Section

ChannelSwitching

multiRabUdi8Available

Controls the RNC support for the feature UDI+8/8 (Cs Data 64kbps + Packet 8kbps). When set to OFF, a { OnOffVals, Default=OFF }

Data Source

Bulk CM

Source Section

ChannelSwitching

n300

System constant. { long, Default=5 }

Data Source

Bulk CM

© Copyright IBM Corp. 2008, 2009. All Rights Reserved.

Source Section

Rrc

n302

System constant. { long, Default=3 }

Data Source

Bulk CM

Source Section

Rrc

n308

System constant. { long, Default=1 }

Data Source

Bulk CM

Source Section

Rrc

n313

System constant. { long, Default=100 }

Data Source

Bulk CM

Source Section

Rrc

n315

System constant. { long, Default=1 }

Data Source

Bulk CM

Source Section

Rrc

netwResourceIdentifierLengthCs

Bitmask length of the NRI for CS/MSC. 0 (default) means no Iu Flex active to be used for Iu Flex.

Data Source

Bulk CM

Source Field

es:networkResourceIdentifierLengthCs

Source Section

RncFunction

netwResourceIdentifierLengthPs

Bitmask length of the NRI for PS/SGSN. 0 (default) means no Iu Flex active to be used for Iu Flex.

Data Source

Bulk CM

Source Field

es:networkResourceIdentifierLengthPs

Source Section

RncFunction

nonUsedFreqThresh4_2bEcno

Threshold for measurement 4 event 2b for the non-used frequencies when the measurement quantity is Ec/No. { long, Range = -24..0, Default=-13 }

Data Source

Bulk CM

Source Section

UeMeasControl

nonUsedFreqThresh4_2bRscp

Threshold for measurement 4 event 2b for the non-used frequencies when the measurement quantity is RSCP. { long, Range = -115..-25, Default=-105 }

© Copyright IBM Corp. 2008, 2009. All Rights Reserved.

Data Source

Bulk CM

Source Section

UeMeasControl

nonUsedFreqW4_2b

Weighting factor for measurement 4 event 2b for the non-used frequencies. { long, Range = 0..20, Default=0 }

Data Source

Bulk CM

Source Section

UeMeasControl

noOfCountersAllowed

System constant. { long, Default=215000 }

Data Source

Bulk CM

Source Section

RncFunction

noOfMaxDrxCycles

Paging notification duration. { long, Range = 1..10, Default=1 }

Data Source

Bulk CM

Source Section

Sid

noOfMibValueTagRetrans

Number of MIB value tag retransmissions on the FACH. { long, Range = 0..10, Default=0 }

Data Source

Bulk CM

Source Section

Sid

noOfPagingRecordTransm

Number of preconfigured subsequent transmissions of the same Paging Record. { long, Range = 1..5, Default=2 }

Data Source

Bulk CM

Source Section

Paging

packetEstMode

System constant. { long, Default=1 }

Data Source

Bulk CM

Source Section

Rrc

pcpichPowerDefault

Default primary CPICH power. If the primary CPICH power is not provided from DRNC, DPCCH_Power_Offset is calculated using the parameter. { long, Range = 0..50, Default=33 }

Data Source

Bulk CM

Source Section

PowerControl

pendingTimeAfterTrigger

System constant. { long, Default=1 }

© Copyright IBM Corp. 2008, 2009. All Rights Reserved.

Data Source

Bulk CM

Source Section

ChannelSwitching

PERLENSEC

Period Length

Data Source

NodeB_RNC_RXI

Source Field

perlensec

Source Section

RNC_WMGeneral

PERLENSEC_K

Period length in seconds aggregation summation in time domain and aggregation maximum between Network Elements.

Data Source

NodeB_RNC_RXI

Source Field

perlensec

Source Section

RNC_WMGeneral

pmCnInitPagingToIdleUe

Number of CN-init pages without paging area ID sent to Idle mode UEs.

Data Source

NodeB_RNC_RXI

Source Field

pmCnInitPagingToIdleUe

Source Section

Paging

pmCsCnDowntime

The CS-CN downtime in seconds.

Data Source

RNC

Source Field

pmCsCnDowntime

Source Section

RncFunction

pmIntegrityFailureRrcMsg

Number of uplink RRC messages discarded due to integrity failure.

Data Source

NodeB_RNC_RXI

Source Field

pmIntegrityFailureRrcMsg

Source Section

SecurityHandling

pmIuSccpConRate_00

Iu-signaling connection setup rate. Range: 0 <= x <= 10 (connections/s)

Data Source

RNC

Source Field

pmIuSccpConRate

© Copyright IBM Corp. 2008, 2009. All Rights Reserved.

Source Section

RncFunction

pmIuSccpConRate_01

Iu-signaling connection setup rate. Range: 11 <= x <= 21(connections/s)

Data Source

RNC

Source Field

pmIuSccpConRate

Source Section

RncFunction

pmIuSccpConRate_02

Iu-signaling connection setup rate. Range: 22 <= x <= 33(connections/s)

Data Source

RNC

Source Field

pmIuSccpConRate

Source Section

RncFunction

pmIuSccpConRate_03

Iu-signaling connection setup rate. Range: 34 <= x <= 47(connections/s)

Data Source

RNC

Source Field

pmIuSccpConRate

Source Section

RncFunction

pmIuSccpConRate_04

Iu-signaling connection setup rate. Range: 48 <= x <= 63(connections/s)

Data Source

RNC

Source Field

pmIuSccpConRate

Source Section

RncFunction

pmIuSccpConRate_05

Iu-signaling connection setup rate. Range: 64 <= x <= 81(connections/s)

Data Source

RNC

Source Field

pmIuSccpConRate

Source Section

RncFunction

pmIuSccpConRate_06

Iu-signaling connection setup rate. Range: 82 <= x <= 101(connections/s)

Data Source

RNC

Source Field

pmIuSccpConRate

Source Section

RncFunction

pmIuSccpConRate_07

Iu-signaling connection setup rate. Range: 102 <= x <= 124(connections/s)

© Copyright IBM Corp. 2008, 2009. All Rights Reserved.

Data Source

RNC

Source Field

pmIuSccpConRate

Source Section

RncFunction

pmIuSccpConRate_08

Iu-signaling connection setup rate. Range: 125 <= x <= 150(connections/s)

Data Source

RNC

Source Field

pmIuSccpConRate

Source Section

RncFunction

pmIuSccpConRate_09

Iu-signaling connection setup rate. Range: 151 <= x <= 179(connections/s)

Data Source

RNC

Source Field

pmIuSccpConRate

Source Section

RncFunction

pmIuSccpConRate_10

Iu-signaling connection setup rate. Range: 180 <= x <= 212(connections/s)

Data Source

RNC

Source Field

pmIuSccpConRate

Source Section

RncFunction

pmIuSccpConRate_11

Iu-signaling connection setup rate. Range: 213 <= x <= 249(connections/s)

Data Source

RNC

Source Field

pmIuSccpConRate

Source Section

RncFunction

pmIuSccpConRate_12

Iu-signaling connection setup rate. Range: 250 <= x <= 291(connections/s)

Data Source

RNC

Source Field

pmIuSccpConRate

Source Section

RncFunction

pmIuSccpConRate_13

Iu-signaling connection setup rate. Range: 292 <= x <= 338(connections/s)

Data Source

RNC

Source Field

pmIuSccpConRate

© Copyright IBM Corp. 2008, 2009. All Rights Reserved.

Source Section

RncFunction

pmIuSccpConRate_14

Iu-signaling connection setup rate. Range: 339 <= x <= 391(connections/s)

Data Source

RNC

Source Field

pmIuSccpConRate

Source Section

RncFunction

pmIuSccpConRate_15

Iu-signaling connection setup rate. Range: 392 <= x <= 451(connections/s)

Data Source

RNC

Source Field

pmIuSccpConRate

Source Section

RncFunction

pmIuSccpConRate_16

Iu-signaling connection setup rate. Range: 452 <= x <= 519(connections/s)

Data Source

RNC

Source Field

pmIuSccpConRate

Source Section

RncFunction

pmIuSccpConRate_17

Iu-signaling connection setup rate. Range: 520 <= x <= 596(connections/s)

Data Source

RNC

Source Field

pmIuSccpConRate

Source Section

RncFunction

pmIuSccpConRate_18

Iu-signaling connection setup rate. Range: 597 <= x <= 683(connections/s)

Data Source

RNC

Source Field

pmIuSccpConRate

Source Section

RncFunction

pmIuSccpConRate_19

Iu-signaling connection setup rate. Range: 684 <= x <= 781(connections/s)

Data Source

RNC

Source Field

pmIuSccpConRate

Source Section

RncFunction

pmIuSccpConRate_20

Iu-signaling connection setup rate. Range: 782 <= x <= 892(connections/s)

© Copyright IBM Corp. 2008, 2009. All Rights Reserved.

Data Source

RNC

Source Field

pmIuSccpConRate

Source Section

RncFunction

pmIuSccpConRate_21

Iu-signaling connection setup rate. Range: 893 <= x <= 1017(connections/s)

Data Source

RNC

Source Field

pmIuSccpConRate

Source Section

RncFunction

pmIuSccpConRate_22

Iu-signaling connection setup rate. Range: 1018 <= x <= 1159(connections/s)

Data Source

RNC

Source Field

pmIuSccpConRate

Source Section

RncFunction

pmIuSccpConRate_23

Iu-signaling connection setup rate. Range: 1160 <= x <= 1319(connections/s)

Data Source

RNC

Source Field

pmIuSccpConRate

Source Section

RncFunction

pmIuSccpConRate_24

Iu-signaling connection setup rate. Range: 1320 <= x <= 1500(connections/s)

Data Source

RNC

Source Field

pmIuSccpConRate

Source Section

RncFunction

pmIuSccpConRate_25

Iu-signaling connection setup rate. Range: 1501 <= x <= 1705(connections/s)

Data Source

RNC

Source Field

pmIuSccpConRate

Source Section

RncFunction

pmIuSccpConRate_26

Iu-signaling connection setup rate. Range: 1706 <= x <= 1936(connections/s)

Data Source

RNC

Source Field

pmIuSccpConRate

© Copyright IBM Corp. 2008, 2009. All Rights Reserved.

Source Section

RncFunction

pmIuSccpConRate_27

Iu-signaling connection setup rate. Range: 1937 <= x <= 2197(connections/s)

Data Source

RNC

Source Field

pmIuSccpConRate

Source Section

RncFunction

pmIuSccpConRate_28

Iu-signaling connection setup rate. Range: 2198 <= x <= 2492(connections/s)

Data Source

RNC

Source Field

pmIuSccpConRate

Source Section

RncFunction

pmIuSccpConRate_29

Iu-signaling connection setup rate. Range: 2493 <= x <= 2825(connections/s)

Data Source

RNC

Source Field

pmIuSccpConRate

Source Section

RncFunction

pmIuSccpConRate_30

Iu-signaling connection setup rate. Range: 2826 <= x <= 3202(connections/s)

Data Source

RNC

Source Field

pmIuSccpConRate

Source Section

RncFunction

pmIuSccpConRate_31

Iu-signaling connection setup rate. Range: 3203 <= x <= 3628(connections/s)

Data Source

RNC

Source Field

pmIuSccpConRate

Source Section

RncFunction

pmIuSccpConRate_32

Iu-signaling connection setup rate. Range: 3629 <= x <= 4109(connections/s)

Data Source

RNC

Source Field

pmIuSccpConRate

Source Section

RncFunction

pmIuSccpConRate_33

Iu-signaling connection setup rate. Range: 4110 <= x <= 4653(connections/s)

© Copyright IBM Corp. 2008, 2009. All Rights Reserved.

Data Source

RNC

Source Field

pmIuSccpConRate

Source Section

RncFunction

pmIuSccpConRate_34

Iu-signaling connection setup rate. Range: 4654 <= x <= 5267(connections/s)

Data Source

RNC

Source Field

pmIuSccpConRate

Source Section

RncFunction

pmIuSccpConRate_35

Iu-signaling connection setup rate. Range: 5268 <= x <= 5961(connections/s)

Data Source

RNC

Source Field

pmIuSccpConRate

Source Section

RncFunction

pmIuSccpConRate_36

Iu-signaling connection setup rate. Range: 5962 <= x <= 6745(connections/s)

Data Source

RNC

Source Field

pmIuSccpConRate

Source Section

RncFunction

pmIuSccpConRate_37

Iu-signaling connection setup rate. Range: 6746 <= x <= 7631(connections/s)

Data Source

RNC

Source Field

pmIuSccpConRate

Source Section

RncFunction

pmIuSccpConRate_38

Iu-signaling connection setup rate. Range: 7632 <= x <= 8633(connections/s)

Data Source

RNC

Source Field

pmIuSccpConRate

Source Section

RncFunction

pmIuSccpConRate_39

Iu-signaling connection setup rate. Range: 8634 <= x(connections/s)

Data Source

RNC

Source Field

pmIuSccpConRate

© Copyright IBM Corp. 2008, 2009. All Rights Reserved.

Source Section

RncFunction

pmMocnRedirections

Number of MOCN Redirection indications received from the core network when MOCN is active.

Data Source

RNC

Source Field

pmMocnRedirections

Source Section

RncFunction

pmNoCchDiscardedDataFramesE

Number of discarded DL data frames due to too-early reception for FACH and PCH.

Data Source

NodeB_RNC_RXI

Source Field

pmNoCchDiscardedDataFramesE

Source Section

CchFrameSynch

pmNoCchDiscardedDataFramesL

Number of discarded DL data frames due to too-late reception for FACH and PCH.

Data Source

NodeB_RNC_RXI

Source Field

pmNoCchDiscardedDataFramesL

Source Section

CchFrameSynch

pmNoCchTimingAdjContrFrames

Number of received Downlink Timing Adjustment Control Frames for FACH and PCH.

Data Source

NodeB_RNC_RXI

Source Field

pmNoCchTimingAdjContrFrames

Source Section

CchFrameSynch

pmNoDiscardSduDcch

Number of discarded RLC SDUs for DCCHs.

Data Source

NodeB_RNC_RXI

Source Field

pmNoDiscardSduDcch

Source Section

RncFunction

pmNoDiscardSduDtch

Number of discarded RLC SDUs for DTCHs.

Data Source

NodeB_RNC_RXI

Source Field

pmNoDiscardSduDtch

Source Section

RncFunction

© Copyright IBM Corp. 2008, 2009. All Rights Reserved.

pmNoInvalidRabEstablishAttempts

Number of invalid RAB establishment attempts

Data Source

NodeB_RNC_RXI

Source Field

pmNoInvalidRabEstablishAttempts

Source Section

RncFunction

pmNoInvalidRabReleaseAttempts

Number of invalid RAB release attempts

Data Source

NodeB_RNC_RXI

Source Field

pmNoInvalidRabReleaseAttempts

Source Section

RncFunction

pmNoIuSigEstablishAttemptCs

Number of IU signalling connection setup attempts towards the CS domain.

Data Source

RNC

Source Field

pmNoIuSigEstablishAttemptCs

Source Section

RncFunction

pmNoIuSigEstablishAttemptPs

Number of IU signalling connection setup attempts towards the PS domain.

Data Source

RNC

Source Field

pmNoIuSigEstablishAttemptPs

Source Section

RncFunction

pmNoIuSigEstablishSuccessCs

Number of successful IU signalling connection setups towards the CS domain

Data Source

RNC

Source Field

pmNoIuSigEstablishSuccessCs

Source Section

RncFunction

pmNoIuSigEstablishSuccessPs

Number of successful IU signalling connection setups towards the PS domain.

Data Source

RNC

Source Field

pmNoIuSigEstablishSuccessPs

Source Section

RncFunction

pmNoOfPacketCallDuration1

Accumulated number of RAB activity periods for bursts of size between 200 bytes and 1 kbyte.

Data Source

RNC

© Copyright IBM Corp. 2008, 2009. All Rights Reserved.

Source Field

pmNoOfPacketCallDuration1

Source Section

RncFunction

pmNoOfPacketCallDuration2

Accumulated number of RAB activity periods for bursts of size between1KB - 10KB

Data Source

RNC

Source Field

pmNoOfPacketCallDuration2

Source Section

RncFunction

pmNoOfPacketCallDuration3

Accumulated number of RAB activity periods for bursts of size between 10 kbyte and 100 kbytes

Data Source

RNC

Source Field

pmNoOfPacketCallDuration3

Source Section

RncFunction

pmNoOfPacketCallDuration4

Accumulated number of RAB activity periods for bursts of size greater than 100 kbytes

Data Source

RNC

Source Field

pmNoOfPacketCallDuration4

Source Section

RncFunction

pmNoOfPacketCallDurationHs1

Accumulated number of RAB activity periods for bursts of size between 200 bytes and 1 kbyte for all interactive RABs on HSDPA.

Data Source

RNC

Source Field

pmNoOfPacketCallDurationHs1

Source Section

RncFunction

pmNoOfPacketCallDurationHs2

Accumulated number of RAB activity periods for bursts of size between 1KB - 10KB for all interactive RABs on HSDPA.

Data Source

RNC

Source Field

pmNoOfPacketCallDurationHs2

Source Section

RncFunction

pmNoOfPacketCallDurationHs3

Accumulated number of RAB activity periods for bursts of size between 10KB - 100KB for all interactive RABs on HSDPA.

Data Source

RNC

© Copyright IBM Corp. 2008, 2009. All Rights Reserved.

Source Field

pmNoOfPacketCallDurationHs3

Source Section

RncFunction

pmNoOfPacketCallDurationHs4

Accumulated number of RAB activity periods for bursts of size More than 100KB for all interactive RABs on HSDPA.

Data Source

RNC

Source Field

pmNoOfPacketCallDurationHs4

Source Section

RncFunction

pmNoOfRedirectedEmergencyCalls

Number of rejected RRC connection setups due to emergency calls

Data Source

NodeB_RNC_RXI

Source Field

pmNoOfRedirectedEmergencyCalls

Source Section

RncFunction

pmNoPageDiscardCmpLoadC

Number of pages discarded due to central MP load control.

Data Source

NodeB_RNC_RXI

Source Field

pmNoPageDiscardCmpLoadC

Source Section

Paging

pmNoRabEstablishFailureUeCapability

Number of failed RAB establishments due to insufficient UE capabilities

Data Source

RNC

Source Field

pmNoRabEstablishFailureUeCapability

Source Section

RncFunction

pmNoReceivedSduDcch

Number of received RLC SDUs including discarded SDUs for DCCHs.

Data Source

NodeB_RNC_RXI

Source Field

pmNoReceivedSduDcch

Source Section

RncFunction

pmNoReceivedSduDtch

Number of received RLC SDUs including discarded SDUs for DTCHs.

Data Source

NodeB_RNC_RXI

Source Field

pmNoReceivedSduDtch

© Copyright IBM Corp. 2008, 2009. All Rights Reserved.

Source Section

RncFunction

pmNoReleaseCchWaitCuT

Number of overall releases triggered by cchWaitCuT expiry.

Data Source

NodeB_RNC_RXI

Source Field

pmNoReleaseCchWaitCuT

Source Section

Rcs

pmNoReleaseDchRcLostT

Number of overall releases triggered by dchRcLostT expiry.

Data Source

NodeB_RNC_RXI

Source Field

pmNoReleaseDchRcLostT

Source Section

Rcs

pmNoRetransPduDcch

Number of retransmitted RLC PDUs for DCCHs.

Data Source

NodeB_RNC_RXI

Source Field

pmNoRetransPduDcch

Source Section

RncFunction

pmNoRetransPduDtch

Number of retransmitted RLC PDUs for DTCHs.

Data Source

NodeB_RNC_RXI

Source Field

pmNoRetransPduDtch

Source Section

RncFunction

pmNoRlcErrors

Number of RLC unrecoverable errors (UTRAN) for UEs on FACH or DCH.

Data Source

NodeB_RNC_RXI

Source Field

pmNoRlcErrors

Source Section

Rcs

pmNoSbHoMeasStart

Total number of started Service Based GSM Handover measurements per RNC.

Source Field

pmNoSbHoMeasStart

Source Section

Handover

pmNoSentPduDcch

Number of sent RLC PDUs for DCCHs.

Data Source

NodeB_RNC_RXI

© Copyright IBM Corp. 2008, 2009. All Rights Reserved.

Source Field

pmNoSentPduDcch

Source Section

RncFunction

pmNoSentPduDtch

Number of sent RLC PDUs for DTCHs.

Data Source

NodeB_RNC_RXI

Source Field

pmNoSentPduDtch

Source Section

RncFunction

pmNoSuccessSbHo

Total number of successful outgoing Service Based GSM Handover per RNC.

Source Field

pmNoSuccessSbHo

Source Section

Handover

pmPositioningReqAtt

(Retired on P6)Number of attempted positioning requests from the CN.

Data Source

NodeB_RNC_RXI

Source Field

pmPositioningReqAtt

Source Section

RncFunction

pmPositioningReqAttAgps

(Retired on P6)Number of UE positioning attempts for which the A-GPS method was selected for the initial attempt (reattempts excluded).

Data Source

RNC

Source Field

pmPositioningReqAttAgps

Source Section

AgpsPositioning

pmPositioningReqAttCellId

(Retired on P6)Number of UE positioning attempts for which the Cell ID method was selected for the initial attempt (re-attempts excluded).

Data Source

RNC

Source Field

pmPositioningReqAttCellId

Source Section

UePositioning

pmPositioningReqAttEsAgps

(Retired on P6)Number of UE emergency services positioning attempts for which the A-GPS method was selected for the initial attempt (reattempts excluded).

Data Source

RNC

Source Field

pmPositioningReqAttEsAgps

Source Section

AgpsPositioning

© Copyright IBM Corp. 2008, 2009. All Rights Reserved.

pmPositioningReqAttEsCellId

(Retired on P6)Number of UE emergency services positioning attempts for which the Cell ID method was selected for the initial attempt (re-attempts excluded).

Data Source

RNC

Source Field

pmPositioningReqAttEsCellId

Source Section

UePositioning

pmPositioningReqReAttCellId

(Retired on P6)Number of UE positioning reattempts for which the Cell Id method was selected for the re-attempt.

Data Source

RNC

Source Field

pmPositioningReqReAttCellId

Source Section

UePositioning

pmPositioningReqReAttEsCellId

(Retired on P6)Number of UE emergency services positioning reattempts for which the Cell ID method was selected for the re-attempt.

Data Source

RNC

Source Field

pmPositioningReqReAttEsCellId

Source Section

UePositioning

pmPositioningReqReAttSuccCellId

(Retired on P6)Number of successful UE positioning reattempts for which the Cell Id method was selected for the re-attempt.

Data Source

RNC

Source Field

pmPositioningReqReAttSuccCellId

Source Section

UePositioning

pmPositioningReqSucc

(Retired on P6)Number of successful positioning requests from the CN.

Data Source

NodeB_RNC_RXI

Source Field

pmPositioningReqSucc

Source Section

RncFunction

pmPositioningReqSuccAgps

(Retired on P6)Number of successful UE positioning attempts for which the A-GPS method was selected for the initial attempt (reattempts excluded).

Data Source

RNC

Source Field

pmPositioningReqSuccAgps

Source Section

AgpsPositioning

© Copyright IBM Corp. 2008, 2009. All Rights Reserved.

pmPositioningReqSuccAgpsQosSucc

(Retired on P6)Number of successful UE positioning attempts with requested QoS fulfilled, for which the A-GPS method was selected for the initial attempt (reattempts excluded).

Data Source

RNC

Source Field

pmPositioningReqSuccAgpsQosSucc

Source Section

AgpsPositioning

pmPositioningReqSuccCellId

(Retired on P6)Number of successful UE positioning attempts for which the Cell ID method was selected for the initial attempt (reattempts excluded).

Data Source

RNC

Source Field

pmPositioningReqSuccCellId

Source Section

UePositioning

pmPositioningReqSuccCellIdQosSucc

(Retired on P6)Number of successful UE positioning attempts with requested QoS fulfilled, for which the Cell ID method was selected for the initial attempt (re-attempts excluded).

Data Source

RNC

Source Field

pmPositioningReqSuccCellIdQosSucc

Source Section

UePositioning

pmPositioningReqSuccEsAgps

(Retired on P6)Number of successful UE emergency services positioning attempts for which the A-GPS method was selected for the initial attempt (reattempts excluded).

Data Source

RNC

Source Field

pmPositioningReqSuccEsAgps

Source Section

AgpsPositioning

pmPositioningReqSuccEsAgpsQosSucc

(Retired on P6)Number of successful UE emergency services positioning attempts with requested QoS fulfilled, for which the A-GPS method was selected for the initial attempt (reattempts excluded).

Data Source

RNC

Source Field

pmPositioningReqSuccEsAgpsQosSucc

Source Section

AgpsPositioning

pmPositioningReqUnsuccAgpsAbort

(Retired on P6)Number of UE positioning attempts for which the A-GPS method was selected for the initial attempt, and the attempt was aborted or stopped by the CN, for example due to a release request from CN, IRAT Handover to GSM or when the CN requests

Data Source

RNC

Source Field

pmPositioningReqUnsuccAgpsAbort

© Copyright IBM Corp. 2008, 2009. All Rights Reserved.

Source Section

AgpsPositioning

pmSamplesDchDchDlRcvDelay_0

Number of samples in pmSumDchDchDlRcvDelay (that is, pmSamplesDchDchDlRcvDelay = pmSamplesDchDchDlRcvDelay +1, whenever pmSumDchDchDlRcvDelay is to be updated).

Data Source

RNC

Source Field

pmSamplesDchDchDlRcvDelay

Source Section

RncFunction

pmSamplesDchDchDlRcvDelay_1

Number of samples in pmSumDchDchDlRcvDelay (that is, pmSamplesDchDchDlRcvDelay = pmSamplesDchDchDlRcvDelay +1, whenever pmSumDchDchDlRcvDelay is to be updated).

Data Source

RNC

Source Field

pmSamplesDchDchDlRcvDelay

Source Section

RncFunction

pmSamplesDchDchDlRcvDelay_2

Number of samples in pmSumDchDchDlRcvDelay (that is, pmSamplesDchDchDlRcvDelay = pmSamplesDchDchDlRcvDelay +1, whenever pmSumDchDchDlRcvDelay is to be updated).

Data Source

RNC

Source Field

pmSamplesDchDchDlRcvDelay

Source Section

RncFunction

pmSamplesDchDchJitter

Number of samples in pmSumDchDchJitter (that is, pmSamplesDchDchJitter = pmSamplesDchDchJitter +1, whenever pmSumDchDchJitter is to be updated). Reset at each ROP period.

Data Source

RNC

Source Field

pmSamplesDchDchJitter

Source Section

RncFunction

pmSamplesDchDchLatency_0

Number of samples in pmSumDchDchLatency (that is, pmSamplesDchDchLatency = pmSamplesDchDchLatency +1, whenever pmSumDchDchLatency is to be updated).

Data Source

RNC

Source Field

pmSamplesDchDchLatency

Source Section

RncFunction

pmSamplesDchDchLatency_1

Number of samples in pmSumDchDchLatency (that is, pmSamplesDchDchLatency = pmSamplesDchDchLatency +1, whenever pmSumDchDchLatency is to be updated).

Data Source

RNC

Source Field

pmSamplesDchDchLatency

© Copyright IBM Corp. 2008, 2009. All Rights Reserved.

Source Section

RncFunction

pmSamplesDchDchLatency_2

Number of samples in pmSumDchDchLatency (that is, pmSamplesDchDchLatency = pmSamplesDchDchLatency +1, whenever pmSumDchDchLatency is to be updated).

Data Source

RNC

Source Field

pmSamplesDchDchLatency

Source Section

RncFunction

pmSamplesDchDlDelay_0

Number of samples in pmSumDchDlDelay (that is, pmSamplesDchDlDelay = pmSamplesDchDlDelay +1, whenever pmSumDchDlDelay is to be updated).

Data Source

RNC

Source Field

pmSamplesDchDlDelay

Source Section

RncFunction

pmSamplesDchDlDelay_1

Number of samples in pmSumDchDlDelay (that is, pmSamplesDchDlDelay = pmSamplesDchDlDelay +1, whenever pmSumDchDlDelay is to be updated).

Data Source

RNC

Source Field

pmSamplesDchDlDelay

Source Section

RncFunction

pmSamplesDchDlDelay_2

Number of samples in pmSumDchDlDelay (that is, pmSamplesDchDlDelay = pmSamplesDchDlDelay +1, whenever pmSumDchDlDelay is to be updated).

Data Source

RNC

Source Field

pmSamplesDchDlDelay

Source Section

RncFunction

pmSamplesHsDchDlRcvDelay_0

Number of samples in pmSumHsDchDlRcvDelay (that is, pmSamplesHsDchDlRcvDelay = pmSamplesHsDchDlRcvDelay +1, whenever pmSumHsDchDlRcvDelay is to be updated).

Data Source

RNC

Source Field

pmSamplesHsDchDlRcvDelay

Source Section

RncFunction

pmSamplesHsDchDlRcvDelay_1

Number of samples in pmSumHsDchDlRcvDelay (that is, pmSamplesHsDchDlRcvDelay = pmSamplesHsDchDlRcvDelay +1, whenever pmSumHsDchDlRcvDelay is to be updated).

Data Source

RNC

Source Field

pmSamplesHsDchDlRcvDelay

© Copyright IBM Corp. 2008, 2009. All Rights Reserved.

Source Section

RncFunction

pmSamplesHsDchDlRcvDelay_2

Number of samples in pmSumHsDchDlRcvDelay (that is, pmSamplesHsDchDlRcvDelay = pmSamplesHsDchDlRcvDelay +1, whenever pmSumHsDchDlRcvDelay is to be updated).

Data Source

RNC

Source Field

pmSamplesHsDchDlRcvDelay

Source Section

RncFunction

pmSamplesHsDchJitter

Number of samples in pmSumHsDchJitter (that is, pmSamplesHsDchJitter = pmSamplesHsDchJitter +1, whenever pmSumHsDchJitter is to be updated). Reset at each ROP period.

Data Source

RNC

Source Field

pmSamplesHsDchJitter

Source Section

RncFunction

pmSamplesHsDchLatency_0

Number of samples in pmSumHsDchLatency (i.e. pmSamplesHsDchLatency = pmSamplesHsDchLatency +1, whenever pmSumHsDchLatency is to be updated).

Data Source

RNC

Source Field

pmSamplesHsDchLatency

Source Section

RncFunction

pmSamplesHsDchLatency_1

Number of samples in pmSumHsDchLatency (i.e. pmSamplesHsDchLatency = pmSamplesHsDchLatency +1, whenever pmSumHsDchLatency is to be updated).

Data Source

RNC

Source Field

pmSamplesHsDchLatency

Source Section

RncFunction

pmSamplesHsDchLatency_2

Number of samples in pmSumHsDchLatency (i.e. pmSamplesHsDchLatency = pmSamplesHsDchLatency +1, whenever pmSumHsDchLatency is to be updated).

Data Source

RNC

Source Field

pmSamplesHsDchLatency

Source Section

RncFunction

pmSamplesHsDlDelay_0

Number of samples in pmSumHsDlDelay (that is, pmSamplesHsDlDelay = pmSamplesHsDlDelay +1, whenever pmSumHsDlDelay is to be updated).

Data Source

RNC

Source Field

pmSamplesHsDlDelay

© Copyright IBM Corp. 2008, 2009. All Rights Reserved.

Source Section

RncFunction

pmSamplesHsDlDelay_1

Number of samples in pmSumHsDlDelay (that is, pmSamplesHsDlDelay = pmSamplesHsDlDelay +1, whenever pmSumHsDlDelay is to be updated).

Data Source

RNC

Source Field

pmSamplesHsDlDelay

Source Section

RncFunction

pmSamplesHsDlDelay_2

Number of samples in pmSumHsDlDelay (that is, pmSamplesHsDlDelay = pmSamplesHsDlDelay +1, whenever pmSumHsDlDelay is to be updated).

Data Source

RNC

Source Field

pmSamplesHsDlDelay

Source Section

RncFunction

pmSamplesHsEulDlRcvDelay_0

Number of samples in pmSumHsEulDlRcvDelay (that is, pmSamplesHsEulDlRcvDelay = pmSamplesHsEulDlRcvDelay +1, whenever pmSumHsEulDlRcvDelay is to be updated).

Data Source

RNC

Source Field

pmSamplesHsEulDlRcvDelay

Source Section

RncFunction

pmSamplesHsEulDlRcvDelay_1

Number of samples in pmSumHsEulDlRcvDelay (that is, pmSamplesHsEulDlRcvDelay = pmSamplesHsEulDlRcvDelay +1, whenever pmSumHsEulDlRcvDelay is to be updated).

Data Source

RNC

Source Field

pmSamplesHsEulDlRcvDelay

Source Section

RncFunction

pmSamplesHsEulDlRcvDelay_2

Number of samples in pmSumHsEulDlRcvDelay (that is, pmSamplesHsEulDlRcvDelay = pmSamplesHsEulDlRcvDelay +1, whenever pmSumHsEulDlRcvDelay is to be updated).

Data Source

RNC

Source Field

pmSamplesHsEulDlRcvDelay

Source Section

RncFunction

pmSamplesHsEulJitter

Number of samples in pmSumHsEulJitter (that is, pmSamplesHsEulJitter = pmSamplesHsEulJitter +1, whenever pmSumHsEulJitter is to be updated).

Data Source

RNC

Source Field

pmSamplesHsEulJitter

© Copyright IBM Corp. 2008, 2009. All Rights Reserved.

Source Section

RncFunction

pmSamplesHsEulLatency_0

Number of samples in pmSumHsEulLatency (that is, pmSamplesHsEulLatency = pmSamplesHsEulLatency +1, whenever pmSumHsEulLatency is to be updated).

Data Source

RNC

Source Field

pmSamplesHsEulLatency

Source Section

RncFunction

pmSamplesHsEulLatency_1

Number of samples in pmSumHsEulLatency (that is, pmSamplesHsEulLatency = pmSamplesHsEulLatency +1, whenever pmSumHsEulLatency is to be updated).

Data Source

RNC

Source Field

pmSamplesHsEulLatency

Source Section

RncFunction

pmSamplesHsEulLatency_2

Number of samples in pmSumHsEulLatency (that is, pmSamplesHsEulLatency = pmSamplesHsEulLatency +1, whenever pmSumHsEulLatency is to be updated).

Data Source

RNC

Source Field

pmSamplesHsEulLatency

Source Section

RncFunction

pmSentPacketData1

Accumulated amount (in bytes) of user data transmitted in bursts of size between 200 bytes and 1 kbyte for all Interactive RABs, not including retransmissions.

Data Source

RNC

Source Field

pmSentPacketData1

Source Section

RncFunction

pmSentPacketData2

Accumulated amount (in bytes) of user data transmitted in bursts of size between 1 kbyte and 10 kbytes for all Interactive RABs, not including retransmissions.

Data Source

RNC

Source Field

pmSentPacketData2

Source Section

RncFunction

pmSentPacketData3

Accumulated amount (in bytes) of user data transmitted in bursts of size between 10 kbyte and 100 kbytes for all Interactive RABs, not including retransmissions.

Data Source

RNC

Source Field

pmSentPacketData3

© Copyright IBM Corp. 2008, 2009. All Rights Reserved.

Source Section

RncFunction

pmSentPacketData4

Accumulated amount (in bytes) of user data transmitted in bursts of size greater than 100 kbytes for all Interactive RABs, not including retransmissions

Data Source

RNC

Source Field

pmSentPacketData4

Source Section

RncFunction

pmSentPacketDataHs1

Accumulated amount (in bytes)of user data transmitted in bursts of size between 200 bytes and 1 kbyte for all Interactive RABs on HSDPA, not including retransmissions.

Data Source

RNC

Source Field

pmSentPacketDataHs1

Source Section

RncFunction

pmSentPacketDataHs2

Accumulated amount (in bytes) of user data transmitted in bursts of size between 1 kbyte and 10 kbytes for all Interactive RABs on HSDPA, not including retransmissions.

Data Source

RNC

Source Field

pmSentPacketDataHs2

Source Section

RncFunction

pmSentPacketDataHs3

Accumulated amount (in bytes) of user data transmitted in bursts of size between 10 kbytes and 100 kbytes for all Interactive RABs on HSDPA, not including retransmissions.

Data Source

RNC

Source Field

pmSentPacketDataHs3

Source Section

RncFunction

pmSentPacketDataHs4

Accumulated amount (in bytes) of user data transmitted in bursts of size greater size than 100 kbytes for all Interactive RABs on HSDPA, not including retransmissions.

Data Source

RNC

Source Field

pmSentPacketDataHs4

Source Section

RncFunction

pmSentPacketDataInclRetrans1

Accumulated amount (in bytes) of user data transmitted in bursts of size between 200 bytes and 1 kbyte for all Interactive RABs, including retransmitted data over the radio.

Data Source

RNC

Source Field

pmSentPacketDataInclRetrans1

© Copyright IBM Corp. 2008, 2009. All Rights Reserved.

Source Section

RncFunction

pmSentPacketDataInclRetrans2

Accumulated amount (in bytes) of user data transmitted in bursts of size between 1 kbyte and 10 kbytes for all Interactive RABs, including retransmitted data over the radio.

Data Source

RNC

Source Field

pmSentPacketDataInclRetrans2

Source Section

RncFunction

pmSentPacketDataInclRetrans3

Accumulated amount (in bytes) of user data transmitted in bursts of size between 10 kbyte and 100 kbytes for all Interactive RABs, including retransmitted data over the radio

Data Source

RNC

Source Field

pmSentPacketDataInclRetrans3

Source Section

RncFunction

pmSentPacketDataInclRetrans4

Accumulated amount (in bytes) of user data transmitted in bursts of size greater than 100 kbytes for all Interactive RABs, including retransmitted data over the radio

Data Source

RNC

Source Field

pmSentPacketDataInclRetrans4

Source Section

RncFunction

pmSentPacketDataInclRetransHs1

Accumulated amount (in bytes)of user data transmitted in bursts of size between 200 bytes and 1 kbyte, for all Interactive RABs on HSDPA, including retransmitted data.

Data Source

RNC

Source Field

pmSentPacketDataInclRetransHs1

Source Section

RncFunction

pmSentPacketDataInclRetransHs2

Accumulated amount (in bytes)of user data transmitted in bursts of size between 1 kbytes and 10 kbyte, for all Interactive RABs on HSDPA, including retransmitted data.

Data Source

RNC

Source Field

pmSentPacketDataInclRetransHs2

Source Section

RncFunction

pmSentPacketDataInclRetransHs3

Accumulated amount (in bytes)of user data transmitted in bursts of size More than 100KB , for all Interactive RABs on HSDPA, including retransmitted data.

Data Source

RNC

Source Field

pmSentPacketDataInclRetransHs3

© Copyright IBM Corp. 2008, 2009. All Rights Reserved.

Source Section

RncFunction

pmSentPacketDataInclRetransHs4

Accumulated amount (in bytes)of user data transmitted in bursts of size between 200 bytes and 1 kbyte, for all Interactive RABs on HSDPA, including retransmitted data.

Data Source

RNC

Source Field

pmSentPacketDataInclRetransHs4

Source Section

RncFunction

pmSofterHoAttemptNonIur

Number of attempted non-Iur softer handovers.

Data Source

RNC

Source Field

pmSofterHoAttemptNonIur

Source Section

Handover

pmSofterHoSuccessNonIur

Number of successful non-Iur softer handovers.

Data Source

RNC

Source Field

pmSofterHoSuccessNonIur

Source Section

Handover

pmSoftHoAttemptNonIur

Number of attempted non-Iur soft handovers.

Data Source

RNC

Source Field

pmSoftHoAttemptNonIur

Source Section

Handover

pmSoftHoSuccessNonIur

Number of successful non-Iur soft handovers.

Data Source

RNC

Source Field

pmSoftHoSuccessNonIur

Source Section

Handover

pmSoftSofterHoAttemptIur

Number of attempted soft and softer handovers over Iur.

Data Source

RNC

Source Field

pmSoftSofterHoAttemptIur

Source Section

Handover

© Copyright IBM Corp. 2008, 2009. All Rights Reserved.

pmSoftSofterHoSuccessIur

Number of successful soft and softer handovers over Iur.

Data Source

RNC

Source Field

pmSoftSofterHoSuccessIur

Source Section

Handover

pmSumDchDchDlRcvDelay_0

Aggregate of RAN SDU receive delay for PS Interactive R99 DCH on downlink, R99 DCH on uplink.

Data Source

RNC

Source Field

pmSumDchDchDlRcvDelay

Source Section

RncFunction

pmSumDchDchDlRcvDelay_1

Aggregate of RAN SDU receive delay for PS Interactive R99 DCH on downlink, R99 DCH on uplink.

Data Source

RNC

Source Field

pmSumDchDchDlRcvDelay

Source Section

RncFunction

pmSumDchDchDlRcvDelay_2

Aggregate of RAN SDU receive delay for PS Interactive R99 DCH on downlink, R99 DCH on uplink.

Data Source

RNC

Source Field

pmSumDchDchDlRcvDelay

Source Section

RncFunction

pmSumDchDchJitter

Aggregate of the RAN SDU Jitter for PS Interactive R99 DCH on DL, R99 DCH on UL.

Data Source

RNC

Source Field

pmSumDchDchJitter

Source Section

RncFunction

pmSumDchDchLatency_0

Aggregate of RAN SDU Latency for R99 PS Interactive DCH on downlink, R99 PS Interactive DCH on uplink.

Data Source

RNC

Source Field

pmSumDchDchLatency

Source Section

RncFunction

© Copyright IBM Corp. 2008, 2009. All Rights Reserved.

pmSumDchDchLatency_1

Aggregate of RAN SDU Latency for R99 PS Interactive DCH on downlink, R99 PS Interactive DCH on uplink.

Data Source

RNC

Source Field

pmSumDchDchLatency

Source Section

RncFunction

pmSumDchDchLatency_2

Aggregate of RAN SDU Latency for R99 PS Interactive DCH on downlink, R99 PS Interactive DCH on uplink.

Data Source

RNC

Source Field

pmSumDchDchLatency

Source Section

RncFunction

pmSumDchDlDelay_0

Aggregate of RAN SDU delay for Packet Interactive R99 DCH on downlink.

Data Source

RNC

Source Field

pmSumDchDlDelay

Source Section

RncFunction

pmSumDchDlDelay_1

Aggregate of RAN SDU delay for Packet Interactive R99 DCH on downlink.

Data Source

RNC

Source Field

pmSumDchDlDelay

Source Section

RncFunction

pmSumDchDlDelay_2

Aggregate of RAN SDU delay for Packet Interactive R99 DCH on downlink.

Data Source

RNC

Source Field

pmSumDchDlDelay

Source Section

RncFunction

pmSumHsDchDlRcvDelay_0

Aggregate of RAN SDU receive delay for PS Interactive HS-DSCH on downlink, R99 DCH on uplink.

Data Source

RNC

Source Field

pmSumHsDchDlRcvDelay

Source Section

RncFunction

© Copyright IBM Corp. 2008, 2009. All Rights Reserved.

pmSumHsDchDlRcvDelay_1

Aggregate of RAN SDU receive delay for PS Interactive HS-DSCH on downlink, R99 DCH on uplink.

Data Source

RNC

Source Field

pmSumHsDchDlRcvDelay

Source Section

RncFunction

pmSumHsDchDlRcvDelay_2

Aggregate of RAN SDU receive delay for PS Interactive HS-DSCH on downlink, R99 DCH on uplink.

Data Source

RNC

Source Field

pmSumHsDchDlRcvDelay

Source Section

RncFunction

pmSumHsDchJitter

Aggregate of the RAN SDU jitter for PS Interactive HS-DSCH on downlink, R99 DCH on uplink.

Data Source

RNC

Source Field

pmSumHsDchJitter

Source Section

RncFunction

pmSumHsDchLatency_0

Aggregate of RAN SDU Latency for PS Interactive HS-DSCH on downlink, R99 DCH on uplink.

Data Source

RNC

Source Field

pmSumHsDchLatency

Source Section

RncFunction

pmSumHsDchLatency_1

Aggregate of RAN SDU Latency for PS Interactive HS-DSCH on downlink, R99 DCH on uplink.

Data Source

RNC

Source Field

pmSumHsDchLatency

Source Section

RncFunction

pmSumHsDchLatency_2

Aggregate of RAN SDU Latency for PS Interactive HS-DSCH on downlink, R99 DCH on uplink.

Data Source

RNC

Source Field

pmSumHsDchLatency

Source Section

RncFunction

© Copyright IBM Corp. 2008, 2009. All Rights Reserved.

pmSumHsDlDelay_0

Aggregate of RAN SDU delay for HS-DSCH on downlink.

Data Source

RNC

Source Field

pmSumHsDlDelay

Source Section

RncFunction

pmSumHsDlDelay_1

Aggregate of RAN SDU delay for HS-DSCH on downlink.

Data Source

RNC

Source Field

pmSumHsDlDelay

Source Section

RncFunction

pmSumHsDlDelay_2

Aggregate of RAN SDU delay for HS-DSCH on downlink.

Data Source

RNC

Source Field

pmSumHsDlDelay

Source Section

RncFunction

pmSumHsEulDlRcvDelay_0

Aggregate of RAN SDU receive delay for PS Interactive HS-DSCH on downlink, EUL on uplink.

Data Source

RNC

Source Field

pmSumHsEulDlRcvDelay

Source Section

RncFunction

pmSumHsEulDlRcvDelay_1

Aggregate of RAN SDU receive delay for PS Interactive HS-DSCH on downlink, EUL on uplink.

Data Source

RNC

Source Field

pmSumHsEulDlRcvDelay

Source Section

RncFunction

pmSumHsEulDlRcvDelay_2

Aggregate of RAN SDU receive delay for PS Interactive HS-DSCH on downlink, EUL on uplink.

Data Source

RNC

Source Field

pmSumHsEulDlRcvDelay

Source Section

RncFunction

© Copyright IBM Corp. 2008, 2009. All Rights Reserved.

pmSumHsEulJitter

Aggregate of the RAN SDU Jitter for PS Interactive HS-DSCH on DL, EUL on UL.

Data Source

RNC

Source Field

pmSumHsEulJitter

Source Section

RncFunction

pmSumHsEulLatency_0

Aggregate of RAN SDU Latency for PS Interactive HS-DSCH on downlink, EUL on uplink.

Data Source

RNC

Source Field

pmSumHsEulLatency

Source Section

RncFunction

pmSumHsEulLatency_1

Aggregate of RAN SDU Latency for PS Interactive HS-DSCH on downlink, EUL on uplink.

Data Source

RNC

Source Field

pmSumHsEulLatency

Source Section

RncFunction

pmSumHsEulLatency_2

Aggregate of RAN SDU Latency for PS Interactive HS-DSCH on downlink, EUL on uplink.

Data Source

RNC

Source Field

pmSumHsEulLatency

Source Section

RncFunction

pmTotalPacketDuration1

Accumulated time (in ms) that data has been transmitted in bursts of size between 200 bytes and 1 kbyte for all Interactive RABs

Data Source

RNC

Source Field

pmTotalPacketDuration1

Source Section

RncFunction

pmTotalPacketDuration2

Accumulated time (in ms) that data has been transmitted in bursts of size between 200 bytes and 1 kbyte for all Interactive RABs

Data Source

RNC

Source Field

pmTotalPacketDuration2

Source Section

RncFunction

pmTotalPacketDuration3

Accumulated time (in ms) that data has been transmitted in bursts of size between 10 kbyte and 100 kbytes for all Interactive RABs

© Copyright IBM Corp. 2008, 2009. All Rights Reserved.

Data Source

RNC

Source Field

pmTotalPacketDuration3

Source Section

RncFunction

pmTotalPacketDuration4

Accumulated time (in ms) that data has been transmitted in bursts of size greater than 100 kbytes for all Interactive RABs

Data Source

RNC

Source Field

pmTotalPacketDuration4

Source Section

RncFunction

pmTotalPacketDurationHs1

Accumulated time (in ms) that data has been transmitted in bursts of size between 200 bytes and 1 kbyte for all Interactive RABs on HSDPA.

Data Source

RNC

Source Field

pmTotalPacketDurationHs1

Source Section

RncFunction

pmTotalPacketDurationHs2

Accumulated time (in ms) that data has been transmitted in bursts of size between 1 kbyte and 10 kbytes for all Interactive RABs on HSDPA.

Data Source

RNC

Source Field

pmTotalPacketDurationHs2

Source Section

RncFunction

pmTotalPacketDurationHs3

Accumulated time (in ms) that data has been transmitted in bursts of size between 10 kbytes and 100 kbytes for all Interactive RABs on HSDPA.

Data Source

RNC

Source Field

pmTotalPacketDurationHs3

Source Section

RncFunction

pmTotalPacketDurationHs4

Accumulated time (in ms) that data has been transmitted in bursts of size greater size than 100 kbytes for all Interactive RABs on HSDPA.

Data Source

RNC

Source Field

pmTotalPacketDurationHs4

Source Section

RncFunction

pmTotNoSbHo

Total number of potential Service Based GSM Handover users per RNC.

© Copyright IBM Corp. 2008, 2009. All Rights Reserved.

Source Field

pmTotNoSbHo

Source Section

Handover

pO1

Power offset for the TFCI. { long, Range = 0..24, Default=0 }

Data Source

Bulk CM

Source Section

PowerControl

pO2

Power offset for the TPC bits. { long, Range = 0..24, Default=12 }

Data Source

Bulk CM

Source Section

PowerControl

pO3

Power offset for the pilot bits. { long, Range = 0..24, Default=12 }

Data Source

Bulk CM

Source Section

PowerControl

polygonRadiusFactor

Scale factor that is multiplied with the uncertainty estimate This value is only used when the pre-estimate is successful, i.e. used as the UE reference position. { long, Range = 1..1000, Default=10 }

Data Source

Bulk CM

Source Section

AgpsPositioning

psStreaming128

Indicates whether PS streaming 128 is on or off. { OnOffVals, Default= OFF }

Data Source

Bulk CM

Source Section

RabHandling

psStreamingInactivityTimer

Timer for monitoring activity on the PS Streaming RAB. When the timer expires, RNC will request the CN to release the PS Streaming RAB. { long, Range = 5..600, Default=30 }

Data Source

Bulk CM

Source Section

RabHandling

pwrEstFact1

System constant. { long, Default=100 }

Data Source

Bulk CM

Source Section

PowerControl

pwrEstFact2

System constant. { long, Default=80 }

© Copyright IBM Corp. 2008, 2009. All Rights Reserved.

Data Source

Bulk CM

Source Section

PowerControl

pwrEstFact3

System constant. { long, Default=80 }

Data Source

Bulk CM

Source Section

PowerControl

readSfnInd

System constant. { long, Default=1 }

Data Source

Bulk CM

Source Section

UeMeasControl

recordingStorageSize

System constant. { long, Default=60000 }

Data Source

Bulk CM

Source Section

RncFunction

releaseConnOffset

The threshold (offset) for a cell to be included in the active set, when the connection is released at inclusion rejection. { long, Range = -30..250, Default=120 }

Data Source

Bulk CM

Source Section

Handover

repeatTimer

System constant. { long, Default=4 }

Data Source

Bulk CM

Source Section

ChannelSwitching

reportHysteresis

Reporting hysteresis for the code power measurements in the node B. { long, Range = 0..20, Default=6 }

Data Source

Bulk CM

Source Section

ChannelSwitching

reportingInterval1a

Interval of event-triggered periodical reporting in case of 'cell addition failure' or 'cell replacement failure'. { long, Range = 0..7, Default=3 }

Data Source

Bulk CM

Source Section

UeMeasControl

reportingInterval1c

Interval of event-triggered periodical reporting in case of 'cell addition failure' or 'cell replacement failure'. { long, Range = 0..7, Default=3 }

© Copyright IBM Corp. 2008, 2009. All Rights Reserved.

Data Source

Bulk CM

Source Section

UeMeasControl

reportingRange1a

Used by UE functions for intra-frequency measurement reporting (in CELL_DCH). Threshold used for addition-window in evaluation criteria for event type 1a. { long, Range = 0..29, Default=6 }

Data Source

Bulk CM

Source Section

UeMeasControl

reportingRange1b

Used by UE functions for intra-frequency measurement reporting (in CELL_DCH). Threshold used for dropwindow in evaluation criteria for event 1b. { long, Range = 0..29, Default=10 }

Data Source

Bulk CM

Source Section

UeMeasControl

reportPeriodicity

System constant. { long, Default=1000 }

Data Source

Bulk CM

Source Section

PowerControl

RNC_nesw

RNC NE Software Version

Data Source

RNC

Source Field

nesw

RNC_RELEASE

Release

Data Source

NodeB_RNC_RXI

Source Section

RNC

rncId_CM

Unique RNC ID (Ref. 3GPP TS 23.003).

Data Source

Bulk CM

Source Field

un:rncId

Source Section

RncFunction

rpp

System constant. { long, Default=1 }

Data Source

Bulk CM

Source Section

PowerControl

rtwpFilter

System constant. { long, Default=9 }

© Copyright IBM Corp. 2008, 2009. All Rights Reserved.

Data Source

Bulk CM

Source Section

PowerControl

selHoSup

Indicates whether Selective Handover is supported in the RNC. Selective Handover is part of shared network support. { BooleanVals, Default= FALSE }

Data Source

Bulk CM

Source Section

Handover

serviceBasedHoSupport

Service-based HO Support

Data Source

Bulk CM

Source Field

es:serviceBasedHoSupport

Source Section

Handover

sib11RepPeriod

The Repetition period (SIB_REP) for System Information Block (SIB) type 11

Data Source

Bulk CM

Source Field

es:sib11RepPeriod

Source Section

Sid

sib11StartPos

The Start Position (SIB_POS) for System Information Block (SIB) type 11

Data Source

Bulk CM

Source Field

es:sib11StartPos

Source Section

Sid

sib12RepPeriod

The Repetition period (SIB_REP) for System Information Block (SIB) type 12

Data Source

Bulk CM

Source Field

es:sib12RepPeriod

Source Section

Sid

sib12StartPos

The Start Position (SIB_POS) for System Information Block (SIB) type 12

Data Source

Bulk CM

Source Field

es:sib12StartPos

Source Section

Sid

© Copyright IBM Corp. 2008, 2009. All Rights Reserved.

sib1RepPeriod

The Repetition period (SIB_REP) for System Information Block (SIB) type 1

Data Source

Bulk CM

Source Field

es:sib1RepPeriod

Source Section

Sid

sib1StartPos

The Start Position (SIB_POS) for System Information Block (SIB) type 1

Data Source

Bulk CM

Source Field

es:sib1StartPos

Source Section

Sid

sib3RepPeriod

The Repetition period (SIB_REP) for System Information Block (SIB) type 3

Data Source

Bulk CM

Source Field

es:sib3RepPeriod

Source Section

Sid

sib3StartPos

The Start Position (SIB_POS) for System Information Block (SIB) type 3.

Data Source

Bulk CM

Source Field

es:sib3StartPos

Source Section

Sid

sib5RepPeriod

The Repetition period (SIB_REP) for System Information Block (SIB) type 5

Data Source

Bulk CM

Source Field

es:sib5RepPeriod

Source Section

Sid

sib5StartPos

The Start Position (SIB_POS) for System Information Block (SIB) type 5

Data Source

Bulk CM

Source Field

es:sib5StartPos

Source Section

Sid

sib7ExpirationTimeFactor

SIB7 use expiration time as re-read mechanism. The expiration time is sib7RepPeriod times sib7ExpirationTimeFactor. { long, Range = 1, Default=1 }

© Copyright IBM Corp. 2008, 2009. All Rights Reserved.

Data Source

Bulk CM

Source Section

Sid

sib7RepPeriod

The Repetition period (SIB_REP) for System Information Block (SIB) type 7

Data Source

Bulk CM

Source Field

es:sib7RepPeriod

Source Section

Sid

sib7StartPos

The Start Position (SIB_POS) for System Information Block (SIB) type 7

Data Source

Bulk CM

Source Field

es:sib7StartPos

Source Section

Sid

sirErrorMode

System constant. { long, Default=2 }

Data Source

Bulk CM

Source Section

PowerControl

sirErrorReportHyst

System constant. { long, Default=60 }

Data Source

Bulk CM

Source Section

PowerControl

sirEstFilter

System constant. { long, Default=0 }

Data Source

Bulk CM

Source Section

PowerControl

sirIncreaseMask

System constant. { long, Default=4 }

Data Source

Bulk CM

Source Section

PowerControl

sirMax

The maximum allowed SIR target. { long, Range = -82..173, Default=173 }

Data Source

Bulk CM

Source Section

PowerControl

sirMin

The minimum allowed SIR target. { long, Range = -82..173, Default=-82 }

© Copyright IBM Corp. 2008, 2009. All Rights Reserved.

Data Source

Bulk CM

Source Section

PowerControl

state128_128Supported

state 128 128 supported

Data Source

Bulk CM

Source Field

es:state128_128Supported

Source Section

RabHandling

t300

System constant. { long, Default=10 }

Data Source

Bulk CM

Source Section

Rrc

t302

System constant. { long, Default=5 }

Data Source

Bulk CM

Source Section

Rrc

t305

Timer for the time in UE between periodic cell updates. If timer has expired, the UE sends a new CELL UPDATE. { long, Range = 0..7, Default=3 }

Data Source

Bulk CM

Source Section

Rrc

t307

System constant. { long, Default=30 }

Data Source

Bulk CM

Source Section

Rrc

t308

System constant. { long, Default=40 }

Data Source

Bulk CM

Source Section

Rrc

t309

System constant. { long, Default=5 }

Data Source

Bulk CM

Source Section

Rrc

© Copyright IBM Corp. 2008, 2009. All Rights Reserved.

t313

System constant. { long, Default=3 }

Data Source

Bulk CM

Source Section

Rrc

t316

System constant. { long, Default=30 }

Data Source

Bulk CM

Source Section

Rrc

t317

System constant. { long, Default=180 }

Data Source

Bulk CM

Source Section

Rrc

tCellChange

System constant. { long, Default=20 }

Data Source

Bulk CM

Source Section

Handover

thpReportInterval

System constant. { long, Default=5 }

Data Source

Bulk CM

Source Section

ChannelSwitching

timeReleaseIuPs

This timer is a guard timer in case the PS CN does not release the Iu connection after an IRATHO(inter radio access technology handover) to GSM. { long, Range = 0..120, Default=10 }

Data Source

Bulk CM

Source Section

Handover

timeRelocoverall

System constant. { long, Default=5 }

Data Source

Bulk CM

Source Section

Handover

timeRelocprep

System constant. { long, Default=10 }

Data Source

Bulk CM

Source Section

Handover

timeRelocsup

System constant. { long, Default=15 }

© Copyright IBM Corp. 2008, 2009. All Rights Reserved.

Data Source

Bulk CM

Source Section

Handover

timeToTrigger1a

Time in milliseconds (ms) between detection of event 1a and sending of the measurement report. { long, Range = 0..15, Default=11 }

Data Source

Bulk CM

Source Section

UeMeasControl

timeToTrigger1b

Time in milliseconds (ms) between detection of event 1b and sending of the measurement report. { long, Range = 0..15, Default=12 }

Data Source

Bulk CM

Source Section

UeMeasControl

timeToTrigger1c

Time in milliseconds (ms) between detection of event 1c and sending of the measurement report. { long, Range = 0..15, Default=11 }

Data Source

Bulk CM

Source Section

UeMeasControl

timeToTrigger1d

Time in milliseconds (ms) between detection of event 1d and sending of the measurement report. { long, Range = 0..15, Default=14 }

Data Source

Bulk CM

Source Section

UeMeasControl

timeToTrigger2dEcno

Time in milliseconds (ms) between detection of event 2d and sending of the measurement report, when the measurement quantity is CPICH EC/NO. { long, Range = 0, 10, 20, 40, 60, 80, 100, 120, 160, 200, 240, 320, 640,, Default=320 }

Data Source

Bulk CM

Source Section

UeMeasControl

timeToTrigger2dRscp

Time in milliseconds (ms) between detection of event 2d and sending of the measurement report, when the measurement quantity is CPICH RSCP. { long, Range = 0, 10, 20, 40, 60, 80, 100, 120, 160, 200, 240, 320, 640,, Default=320 }

Data Source

Bulk CM

Source Section

UeMeasControl

timeToTrigger2fEcno

Time in milliseconds (ms) between detection of event 2f and sending of the measurement report, when the measurement quantity is CPICH EC/NO. { long, Range = 0, 10, 20, 40, 60, 80, 100, 120, 160, 200, 240, 320, 640,, Default=1280 }

Data Source

Bulk CM

Source Section

UeMeasControl

© Copyright IBM Corp. 2008, 2009. All Rights Reserved.

timeToTrigger2fRscp

Time in milliseconds (ms) between detection of event 2f and sending of the measurement report, when the measurement quantity is CPICH RSCP. { long, Range = 0, 10, 20, 40, 60, 80, 100, 120, 160, 200, 240, 320, 640,, Default=1280 }

Data Source

Bulk CM

Source Section

UeMeasControl

timeToTrigger3a

Time in milliseconds (ms) between detection of event 3a and sending of the measurement report. { long, Range = 0..15, Default=6 }

Data Source

Bulk CM

Source Section

UeMeasControl

timeTrigg4_2b

Time between detection of event 2b and sending of the measurement report, for measurement 4. { long, Range = 0, 10, 20, 40, 60, 80, 100, 120, 160, 200, 240, 320, 640, 1280, 2560,, Default=100 }

Data Source

Bulk CM

Source Section

UeMeasControl

timeTrigg6a

Time between detection of event 6a and sending of the measurement report. { long, Range = 0, 10, 20, 40, 60, 80, 100, 120, 160, 200, 240, 320, 640, 1280, 2560,, Default=320 }

Data Source

Bulk CM

Source Section

UeMeasControl

timeTrigg6b

Time between detection of event 6b and sending of the measurement report. { long, Range = 0, 10, 20, 40, 60, 80, 100, 120, 160, 200, 240, 320, 640, 1280, 2560,, Default=1280 }

Data Source

Bulk CM

Source Section

UeMeasControl

tmStopGsmMeas

Maximum time for Service Based GSM Handover measurements. 60 = Measurements are never stopped.

Data Source

Bulk CM

Source Field

es:tmStopGsmMeas

Source Section

Handover

toAE

Time of arrival early point. { long, Range = 0..1279, Default=195 }

Data Source

Bulk CM

Source Section

CchFrameSynch

toAWE

Time of arrival window endpoint. { long, Range = 0..2559, Default=2 }

© Copyright IBM Corp. 2008, 2009. All Rights Reserved.

Data Source

Bulk CM

Source Section

CchFrameSynch

toAWS

Time of arrival window startpoint. { long, Range = 0..1279, Default=30 }

Data Source

Bulk CM

Source Section

CchFrameSynch

tProcRbsDl

System constant. { long, Default=5 }

Data Source

Bulk CM

Source Section

CchFrameSynch

tProcRncDl

System constant. { long, Default=1 }

Data Source

Bulk CM

Source Section

CchFrameSynch

transmittedCodePowerFilter

System constant. { long, Default=4 }

Data Source

Bulk CM

Source Section

PowerControl

triggerCondOne1b

System constant. { long, Default=1 }

Data Source

Bulk CM

Source Section

UeMeasControl

triggerCondTwo1a

System constant. { long, Default=5 }

Data Source

Bulk CM

Source Section

UeMeasControl

tsHoInIratHo

System constant. { long, Default=2 }

Data Source

Bulk CM

Source Section

Handover

uetrFileSize

Size of each UETR recording file. { long, Range = 0..60000, Default=275 }

Data Source

Bulk CM

Source Section

RncFunction

© Copyright IBM Corp. 2008, 2009. All Rights Reserved.

ueTxPowerThresh6a

Threshold for event 6a. { long, Range = -50..33, Default=21 }

Data Source

Bulk CM

Source Section

UeMeasControl

ueTxPowerThresh6b

Threshold for event 6b. { long, Range = -50..33, Default=18 }

Data Source

Bulk CM

Source Section

UeMeasControl

ulInitSirTargetExtraHigh

Generic initial UL SIR target value for RABs which have a minimum Spreading Factor (SF) <= 4. { long, Range = -82..173, Default=92 }

Data Source

Bulk CM

Source Section

PowerControl

ulInitSirTargetHigh

Required UL Initial SIR target for the RAB having minimum SF equal to or lower than 16. { long, Range = -82..173, Default=82 }

Data Source

Bulk CM

Source Section

PowerControl

ulInitSirTargetLow

Required UL Initial SIR target for the RAB having minimum SF equal to or higher than 32. { long, Range = -82..173, Default=49 }

Data Source

Bulk CM

Source Section

PowerControl

ulInitSirTargetSrb

Required UL Initial SIR target for stand alone SRB. { long, Range = -82..173, Default=57 }

Data Source

Bulk CM

Source Section

PowerControl

ulOuterLoopRegulator

Regulation type for uplink outer loop power control algorithm. { string, Default= JUMP }

Data Source

Bulk CM

Source Section

PowerControl

ulRlcBufUpswitch

Uplink threshold for channel switching from FACH/RACH to dedicated channel. { long, Range = 8,16,32,64,128,256,512,1024,2048,3072,4096,6144,8192, Default=256 }

Data Source

Bulk CM

Source Section

ChannelSwitching

© Copyright IBM Corp. 2008, 2009. All Rights Reserved.

ulRlcBufUpswitchMrab

Uplink threshold of the RLC buffer load, used to issue an upswitch request (from "Speech + PS 0/0" to "Speech + PS 64/64"). { long, Range = 8, 16, 32, 64, 128, 256, 512, 1024, 1536, 2048, 3072, 4096,, Default=8 }

Data Source

Bulk CM

Source Section

ChannelSwitching

ulSirGuard

System constant. { long, Default=2 }

Data Source

Bulk CM

Source Section

PowerControl

ulSirStep

The step size for a SIR target change. { long, Range = 0..50, Default=10 }

Data Source

Bulk CM

Source Section

PowerControl

uncertaintyAltitude

Uncertainty in altitude for the UE reference position, independent of whether the pre-estimate is successful or the RNC instead uses a fall-back position. { long, Range = 0..127, Default=Mandatory }

Data Source

Bulk CM

Source Section

AgpsPositioning

updateCellReattsNo

Number of update reattempts when an update of system information parameters in a cell failed. { long, Range = 0..10, Default=0 }

Data Source

Bulk CM

Source Section

Sid

upswitchPwrMargin

Upswitch (DCH to DCH) power margin. { long, Range = 0..20, Default=6 }

Data Source

Bulk CM

Source Section

ChannelSwitching

upswitchTimer

Time during which the bandwidth utilisation is allowed to be high before an upswitch request is issued. { long, Range = 0..100, Default=5 }

Data Source

Bulk CM

Source Section

ChannelSwitching

upswitchTimerUl

Time during which the UL throughput should be higher than threshold, defined by bandwidthMarginUl, before an upswitch is issued. 0 indicates that the upswitch is never requested, even if bandwidth utilization is above the threshold.

Data Source

Bulk CM

Source Field

es:upswitchTimerUl

© Copyright IBM Corp. 2008, 2009. All Rights Reserved.

Source Section

ChannelSwitching

usedFreqRelThresh2fEcno

Relative threshold for event 2f vs event 2d for the used frequency when the measurement quantity is Ec/No. { long, Range = 0..20, Default=1 }

Data Source

Bulk CM

Source Section

UeMeasControl

usedFreqRelThresh2fRscp

Relative threshold for event 2f vs event 2d for the used frequency when the measurement quantity is RSCP. { long, Range = 0..20, Default=3 }

Data Source

Bulk CM

Source Section

UeMeasControl

usedFreqRelThresh4_2bEcno

Relative threshold for event 2b vs event 2d, when the 2d measurement with measurement quantity CPICH EC/NO was started. { long, Range = -10..10, Default=-1 }

Data Source

Bulk CM

Source Section

UeMeasControl

usedFreqRelThresh4_2bRscp

Relative threshold for event 2b vs event 2d when the 2d measurement with measurement quantity CPICH RSCP was started. { long, Range = -20..20, Default=-3 }

Data Source

Bulk CM

Source Section

UeMeasControl

usedFreqThresh2dEcnoDrnc

Threshold for event 2d for the used frequency for cells located in DRNC when the measurement quantity is Ec/No. { long, Range = -24..0, Default=-12 }

Data Source

Bulk CM

Source Section

UeMeasControl

usedFreqThresh2dRscpDrnc

Threshold for event 2d for the used frequency for cells located in the DRNC when the measurement quantity is RSCP. { long, Range = -115..-25, Default=-97 }

Data Source

Bulk CM

Source Section

UeMeasControl

usedFreqW2d

Weighting factor for event 2d for the used frequency. { long, Range = 0..20, Default=0 }

Data Source

Bulk CM

Source Section

UeMeasControl

usedFreqW2f

Weighting factor for event 2f for the used frequency. { long, Range = 0..20, Default=0 }

Data Source

Bulk CM

© Copyright IBM Corp. 2008, 2009. All Rights Reserved.

Source Section

UeMeasControl

usedFreqW4_2b

Weighting factor for measurement 4 event 2b for the currently used frequency. { long, Range = 0..20, Default=0 }

Data Source

Bulk CM

Source Section

UeMeasControl

userLabel

A user-friendly (and user assigned) name of the associated object.

Data Source

Bulk CM

Source Field

un:userLabel

Source Section

RncFunction

userLabel_CM

Provides the possibility to put a user-friendly label on the MO instance. The value is not used by the RNC. { string, LengthRange = 0..128, Default= "" }

Data Source

Bulk CM

Source Section

UeMeasControl

utranFilterCoefficient3

Coefficient for layer 3 filtering of UTRAN quality before inter-RAT reporting evaluation. { long, Range = 0..9,11,13,15,17,19, Default=2 }

Data Source

Bulk CM

Source Section

UeMeasControl

utranRelThresh3aEcno

Relative threshold for event 3a vs event 2d, when the 2d measurement with measurement quantity CPICH EC/NO was started. { long, Range = -10..10, Default=-1 }

Data Source

Bulk CM

Source Section

UeMeasControl

utranRelThresh3aRscp

Relative threshold for event 3a vs event 2d when the 2d measurement with measurement quantity CPICH RSCP was started. { long, Range = -20..20, Default=-3 }

Data Source

Bulk CM

Source Section

UeMeasControl

utranRelThreshRscp

Relative threshold used during bad connection quality, when the measurement quantity is CPICH RSCP. { long, Range = 0..40, Default=5 }

Data Source

Bulk CM

Source Section

UeMeasControl

utranRnsConfidence

Confidence of the fall-back position, used when the pre-estimate fails. { long, Range = 0.. 100, Default=100 }

© Copyright IBM Corp. 2008, 2009. All Rights Reserved.

Data Source

Bulk CM

Source Section

AgpsPositioning

utranRnsUncertaintyRadius

Uncertainty semi-major and semi-minor axes for the fall-back position, used when the pre-estimate fails. Both axes are assigned the same value. { long, Range = 0.. 127, Default=Mandatory }

Data Source

Bulk CM

Source Section

AgpsPositioning

utranW3a

Weighting factor for event 3a for UTRAN. { long, Range = 0..20, Default=0 }

Data Source

Bulk CM

Source Section

UeMeasControl

w1a

Weight factor to include active set cells other than the best in evaluation criteria for event 1a. { long, Range = 0..20, Default=0 }

Data Source

Bulk CM

Source Section

UeMeasControl

w1b

Weight factor to include active set cells other than the best in evaluation criteria for event 1b. { long, Range = 0..20, Default=0 }

Data Source

Bulk CM

Source Section

UeMeasControl

RncCapacity Primitive Calculations

The following is a list of primitive calculations for the RncCapacity entity.

GRAPHmultiLineSeparator

Special Control Field for Multi-Line Graphs

Calculation

```
""
```

NUMDAYS

of days in Report

Calculation

```
DAYSINREPORT()
```

NUMHOURS

of hours in Summation Data

Calculation

RncCapacity Peg Counts

The following is a list of peg counts for the RncCapacity entity.

PERLENSEC

Period Length

Data Source

RNC_RXI

Source Field

PERLENSEC

© Copyright IBM Corp. 2008, 2009. All Rights Reserved.

Source Section

SpbDeviceSet_RNC_WMGeneral

PERLENSEC_K

Period length in seconds aggregation summation in time domain and aggregation maximum between Network Elements.

Data Source

RNC_RXI

Source Field

PERLENSEC

Source Section

SpbDeviceSet_RNC_WMGeneral

pmCapacityAllocAtt

Number of attempts made during the ROP to allocate the resource regulated by this capacity license. For capacity-licensed resources subject to regulation of flow rather than rejection of allocation attempts (such as Iub throughput), this counter is always zero.

Data Source

RNC

Source Field

pmCapacityAllocAtt

Source Section

RncCapacity

pmCapacityAllocRej

Number of rejected attempts made during the ROP to allocate the resource regulated by this capacity license. For capacity-licensed resources subject to regulation of flow rather than rejection of allocation attempts (such as Iub throughput), this counter is always zero.

Data Source

RNC

Source Field

pmCapacityAllocRej

Source Section

RncCapacity

pmCapacityLimit

Value of the attribute currentCapacityLimit at the end of the ROP. This value is used as the 100% limit for the counter pmCapacityUtilization.

Data Source

RNC

Source Field

pmCapacityLimit

Source Section

RncCapacity

pmCapacityUtilization_00

Distribution of the resource utilization for this capacity license, as a percentage of currentCapacityLimit (shown by the counter pmCapacityLimit). If currentCapacityLimit is changed during the ROP, the value of this counter may not be valid during that ROP. If currentCapacityLimit is equal to 0, sub-range [9] (>= 95 %) is used for all samples. Range: 0 <= x < 20 %

Data Source

RNC

Source Field

pmCapacityUtilization

Source Section

RncCapacity

pmCapacityUtilization_01

Distribution of the resource utilization for this capacity license, as a percentage of currentCapacityLimit (shown by the counter pmCapacityLimit). If currentCapacityLimit is changed during the ROP, the value of this counter may not be valid during that ROP. If

© Copyright IBM Corp. 2008, 2009. All Rights Reserved.

currentCapacityLimit is equal to 0, sub-range [9] (>= 95 %) is used for all samples. Range: 20 <= x < 40 %

Data Source

RNC

Source Field

pmCapacityUtilization

Source Section

RncCapacity

pmCapacityUtilization_02

Distribution of the resource utilization for this capacity license, as a percentage of currentCapacityLimit (shown by the counter pmCapacityLimit). If currentCapacityLimit is changed during the ROP, the value of this counter may not be valid during that ROP. If currentCapacityLimit is equal to 0, sub-range [9] (>= 95 %) is used for all samples. Range: 40 <= x < 50 %

Data Source

RNC

Source Field

pmCapacityUtilization

Source Section

RncCapacity

pmCapacityUtilization_03

Distribution of the resource utilization for this capacity license, as a percentage of currentCapacityLimit (shown by the counter pmCapacityLimit). If currentCapacityLimit is changed during the ROP, the value of this counter may not be valid during that ROP. If currentCapacityLimit is equal to 0, sub-range [9] (>= 95 %) is used for all samples. Range: 50 <= x < 60 %

Data Source

RNC

Source Field

pmCapacityUtilization

Source Section

RncCapacity

pmCapacityUtilization_04

Distribution of the resource utilization for this capacity license, as a percentage of currentCapacityLimit (shown by the counter pmCapacityLimit). If currentCapacityLimit is changed during the ROP, the value of this counter may not be valid during that ROP. If currentCapacityLimit is equal to 0, sub-range [9] (>= 95 %) is used for all samples. Range: 60 <= x < 70 %

Data Source

RNC

Source Field

pmCapacityUtilization

Source Section

RncCapacity

pmCapacityUtilization_05

Distribution of the resource utilization for this capacity license, as a percentage of currentCapacityLimit (shown by the counter pmCapacityLimit). If currentCapacityLimit is changed during the ROP, the value of this counter may not be valid during that ROP. If currentCapacityLimit is equal to 0, sub-range [9] (>= 95 %) is used for all samples. Range: 70 <= x < 80 %

Data Source

RNC

Source Field

pmCapacityUtilization

Source Section

RncCapacity

pmCapacityUtilization_06

Distribution of the resource utilization for this capacity license, as a percentage of currentCapacityLimit (shown by the counter pmCapacityLimit). If currentCapacityLimit is changed during the ROP, the value of this counter may not be valid during that ROP. If

© Copyright IBM Corp. 2008, 2009. All Rights Reserved.

currentCapacityLimit is equal to 0, sub-range [9] (>= 95 %) is used for all samples. Range: 80 <= x < 85 %

Data Source

RNC

Source Field

pmCapacityUtilization

Source Section

RncCapacity

pmCapacityUtilization_07

Distribution of the resource utilization for this capacity license, as a percentage of currentCapacityLimit (shown by the counter pmCapacityLimit). If currentCapacityLimit is changed during the ROP, the value of this counter may not be valid during that ROP. If currentCapacityLimit is equal to 0, sub-range [9] (>= 95 %) is used for all samples. Range: 85 <= x < 90 %

Data Source

RNC

Source Field

pmCapacityUtilization

Source Section

RncCapacity

pmCapacityUtilization_08

Distribution of the resource utilization for this capacity license, as a percentage of currentCapacityLimit (shown by the counter pmCapacityLimit). If currentCapacityLimit is changed during the ROP, the value of this counter may not be valid during that ROP. If currentCapacityLimit is equal to 0, sub-range [9] (>= 95 %) is used for all samples. Range: 90 <= x < 95 %

Data Source

RNC

Source Field

pmCapacityUtilization

Source Section

RncCapacity

pmCapacityUtilization_09

Distribution of the resource utilization for this capacity license, as a percentage of currentCapacityLimit (shown by the counter pmCapacityLimit). If currentCapacityLimit is changed during the ROP, the value of this counter may not be valid during that ROP. If currentCapacityLimit is equal to 0, sub-range [9] (>= 95 %) is used for all samples. Range: 95 <= x

Data Source

RNC

Source Field

pmCapacityUtilization

Source Section

RncCapacity

pmSamplesCapacity

Number of samples recorded within the ROP for pmSumCapacity.

Data Source

RNC

Source Field

pmSamplesCapacity

Source Section

RncCapacity

pmSamplesCapacityRegulation

Number of samples recorded within the ROP for pmSumCapacityRegulation.

Data Source

RNC

Source Field

pmSamplesCapacityRegulation

© Copyright IBM Corp. 2008, 2009. All Rights Reserved.

Source Section

RncCapacity

pmSumCapacity

Sum of all sample values recorded during a ROP for the current capacity utilization.

Data Source

RNC

Source Field

pmSumCapacity

Source Section

RncCapacity

pmSumCapacityRegulation

Sum of all sample values recorded during a ROP for the current capacity utilization, when the capacity is being regulated.

Data Source

RNC

Source Field

pmSumCapacityRegulation

Source Section

RncCapacity

pmSumSqrCapacity

Sum of the squares of the individual measurements in pmSumCapacity

Data Source

RNC

Source Field

pmSumSqrCapacity

Source Section

RncCapacity

pmTotalTimeCapacityRegulated

Time during which the capacity utilization has been regulated according to the current capacity limit.

Data Source

RNC

Source Field

pmTotalTimeCapacityRegulated

Source Section

RncCapacity

RNCModule Primitive Calculations

The following is a list of primitive calculations for the RNCModule entity.

GRAPHmultiLineSeparator

Special Control Field for Multi-Line Graphs

Calculation

```
""
```

NUMDAYS

of days in Report

Calculation

```
DAYSINREPORT()
```

NUMHOURS

of hours in Summation Data

Calculation

© Copyright IBM Corp. 2008, 2009. All Rights Reserved.

RNCModule Peg Counts

The following is a list of peg counts for the RNCModule entity.

availabilityStatus

The availability status of the RncModule. { long, Range = 0..2047, Default=0, ReadOnly, NonPersistent, }

Data Source

Bulk CM

Source Section

RncModule

operationalState

The operational state of RncModule. { string, Default= ENABLED, ReadOnly, NonPersistent, }

Data Source

Bulk CM

Source Section

RncModule

PERLENSEC

Period Length

Data Source

NodeB_RNC_RXI

Source Field

perlensec

Source Section

RncModule_WMGeneral

PERLENSEC_K

Period length in seconds aggregation summation in time domain and aggregation maximum between Network Elements.

Data Source

NodeB_RNC

Source Field

perlensec

Source Section

RncModule_WMGeneral

reservedBy

Sequence of SpbDeviceGroup MO and IubLink MO references which belongs to this RncModule. { sequence<ManagedObject,72>, Default = empty, Default=, ReadOnly, }

Data Source

Bulk CM

Source Section

RncModule

RNC_RELEASE

Release

Data Source

NodeB_RNC_RXI

Source Section

RncModule

rncModuleResourceId

Created by the system. Used locally within the RNC to address the RncModule. { long, Range = 0..42, Default=0, ReadOnly, NoNotification}

Data Source

Bulk CM

Source Section

RncModule

© Copyright IBM Corp. 2008, 2009. All Rights Reserved.

userLabel

Provides the possibility to put a user-friendly label on the MO instance. The value is not used by the RNC. { string, LengthRange = 0..128, Default= "" }

Data Source

Bulk CM

Source Section

RncModule

SccpAcctCriteria_NodeB Primitive Calculations

The following is a list of primitive calculations for the SccpAcctCriteria_NodeB entity.

GRAPHmultiLineSeparator

Special Control Field for Multi-Line Graphs

Calculation

```
""
```

NUMDAYS

of days in Report

Calculation

```
DAYSINREPORT()
```

NUMHOURS

of hours in Summation Data

Calculation

SccpAcctCriteria_NodeB Peg Counts

The following is a list of peg counts for the SccpAcctCriteria_NodeB entity.

pmNoOfMsg

The total number of messages, both incoming and outgoing.

Data Source

NodeB_RXI

Source Field

pmNoOfMsg

Source Section

SccpAccountingCriteria

pmNoOfOctets

The total number of octets, both incoming and outgoing.

Data Source

NodeB_RXI

Source Field

pmNoOfOctets

Source Section

SccpAccountingCriteria

SccpAcctCriteria_RNC Primitive Calculations

The following is a list of primitive calculations for the SccpAcctCriteria_RNC entity.

GRAPHmultiLineSeparator

Special Control Field for Multi-Line Graphs

Calculation

```
""
```

NUMDAYS

of days in Report

Calculation

```
DAYSINREPORT()
```

NUMHOURS

of hours in Summation Data

© Copyright IBM Corp. 2008, 2009. All Rights Reserved.

Calculation

SccpAcctCriteria_RNC Peg Counts

The following is a list of peg counts for the SccpAcctCriteria_RNC entity.

pmNoOfMsg

The total number of messages, both incoming and outgoing.

Data Source

RNC_RXI

Source Field

pmNoOfMsg

Source Section

SccpAccountingCriteria

pmNoOfOctets

The total number of octets, both incoming and outgoing.

Data Source

RNC_RXI

Source Field

pmNoOfOctets

Source Section

SccpAccountingCriteria

SccpAp_NodeB Primitive Calculations

The following is a list of primitive calculations for the SccpAp_NodeB entity.

GRAPHmultiLineSeparator

Special Control Field for Multi-Line Graphs

Calculation

""

Updated: 2009-07-22

NUMDAYS

of days in Report

Calculation

```
DAYSINREPORT()
```

NUMHOURS

of hours in Summation Data

Calculation

SccpAp_NodeB Peg Counts

The following is a list of peg counts for the SccpAp_NodeB entity.

PERLENSEC

Period length in seconds

Data Source

NodeB_RNC_RXI

Source Field

perlensec

Source Section

SccpAp_NodeB_WMGeneral

PERLENSEC_K

Period length in seconds aggregation summation in time domain and aggregation maximum between Network Elements.

Data Source

NodeB_RNC_RXI

Source Field

perlensec

Source Section

SccpAp_NodeB_WMGeneral

© Copyright IBM Corp. 2008, 2009. All Rights Reserved.

SccpAp_RNC Primitive Calculations

The following is a list of primitive calculations for the SccpAp_RNC entity.

GRAPHmultiLineSeparator

Special Control Field for Multi-Line Graphs

Calculation

```
""
```

NUMDAYS

of days in Report

Calculation

```
DAYSINREPORT()
```

NUMHOURS

of hours in Summation Data

Calculation

SccpAp_RNC Peg Counts

The following is a list of peg counts for the SccpAp_RNC entity.

PERLENSEC

Period length in seconds

Data Source

NodeB_RNC_RXI

Source Field

perlensec

Source Section

SccpAp_RNC_WMGeneral

PERLENSEC_K

Period length in seconds aggregation summation in time domain and aggregation maximum between Network Elements.

Updated: 2009-07-22

Data Source

NodeB_RNC_RXI

Source Field

perlensec

Source Section

SccpAp_RNC_WMGeneral

Sccpch Primitive Calculations

The following is a list of primitive calculations for the Sccpch entity.

GRAPHmultiLineSeparator

Special Control Field for Multi-Line Graphs

Calculation

```
""
```

NUMDAYS

of days in Report

Calculation

```
DAYSINREPORT()
```

NUMHOURS

of hours in Summation Data

Calculation

Sccpch Peg Counts

The following is a list of peg counts for the Sccpch entity.

NodeB_RELEASE

Release

Data Source

0

© Copyright IBM Corp. 2008, 2009. All Rights Reserved.

PERLENSEC

Period Length

Data Source

0

Source Field

PERLENSEC

Source Section

Sccpch_WMGeneral

PERLENSEC_K

Period length in seconds aggregation summation in time domain and aggregation maximum between Network Elements.

Data Source

NodeB_RNC

Source Field

PERLENSEC

Source Section

Sccpch_WMGeneral

pmMbmsSccpchTransmittedTfc_00

MBMS Transmitted TFCs on an SCCPCH with a certain spreading factor. SF for SCCPCH

Data Source

NodeB

Source Field

pmMbmsSccpchTransmittedTfc

Source Section

Sccpch

pmMbmsSccpchTransmittedTfc_01

MBMS Transmitted TFCs on an SCCPCH with a certain spreading factor. Range: Number of frames with TFC0

Data Source

NodeB

Source Field

pmMbmsSccpchTransmittedTfc

Source Section

Sccpch

pmMbmsSccpchTransmittedTfc_02

MBMS Transmitted TFCs on an SCCPCH with a certain spreading factor. Range: Number of frames with TFC1

Data Source

NodeB

Source Field

pmMbmsSccpchTransmittedTfc

Source Section

Sccpch

pmMbmsSccpchTransmittedTfc_03

MBMS Transmitted TFCs on an SCCPCH with a certain spreading factor. Range: Number of frames with TFC2

Data Source

NodeB

Source Field

pmMbmsSccpchTransmittedTfc

Source Section

Sccpch

© Copyright IBM Corp. 2008, 2009. All Rights Reserved.

pmMbmsSccpchTransmittedTfc_04

MBMS Transmitted TFCs on an SCCPCH with a certain spreading factor. Range: Number of frames with TFC3

Data Source

NodeB

Source Field

pmMbmsSccpchTransmittedTfc

Source Section

Sccpch

pmMbmsSccpchTransmittedTfc_05

MBMS Transmitted TFCs on an SCCPCH with a certain spreading factor. Range: Number of frames with TFC4

Data Source

NodeB

Source Field

pmMbmsSccpchTransmittedTfc

Source Section

Sccpch

pmMbmsSccpchTransmittedTfc_06

MBMS Transmitted TFCs on an SCCPCH with a certain spreading factor. Range: Number of frames with TFC5

Data Source

NodeB

Source Field

pmMbmsSccpchTransmittedTfc

Source Section

Sccpch

pmMbmsSccpchTransmittedTfc_07

MBMS Transmitted TFCs on an SCCPCH with a certain spreading factor. Range: Number of frames with TFC6

Data Source

NodeB

Source Field

pmMbmsSccpchTransmittedTfc

Source Section

Sccpch

pmMbmsSccpchTransmittedTfc_08

MBMS Transmitted TFCs on an SCCPCH with a certain spreading factor. Range: Number of frames with TFC7

Data Source

NodeB

Source Field

pmMbmsSccpchTransmittedTfc

Source Section

Sccpch

pmMbmsSccpchTransmittedTfc_09

MBMS Transmitted TFCs on an SCCPCH with a certain spreading factor. Range: Number of frames with TFC8

Data Source

NodeB

Source Field

pmMbmsSccpchTransmittedTfc

Source Section

Sccpch

© Copyright IBM Corp. 2008, 2009. All Rights Reserved.

pmMbmsSccpchTransmittedTfc_10

MBMS Transmitted TFCs on an SCCPCH with a certain spreading factor. Range: Number of frames with TFC9

Data Source

NodeB

Source Field

pmMbmsSccpchTransmittedTfc

Source Section

Sccpch

pmMbmsSccpchTransmittedTfc_11

MBMS Transmitted TFCs on an SCCPCH with a certain spreading factor. Range: Number of frames with TFC10

Data Source

NodeB

Source Field

pmMbmsSccpchTransmittedTfc

Source Section

Sccpch

pmMbmsSccpchTransmittedTfc_12

MBMS Transmitted TFCs on an SCCPCH with a certain spreading factor. Range: Number of frames with TFC11

Data Source

NodeB

Source Field

pmMbmsSccpchTransmittedTfc

Source Section

Sccpch

pmMbmsSccpchTransmittedTfc_13

MBMS Transmitted TFCs on an SCCPCH with a certain spreading factor. Range: Number of frames with TFC12

Data Source

NodeB

Source Field

pmMbmsSccpchTransmittedTfc

Source Section

Sccpch

pmMbmsSccpchTransmittedTfc_14

MBMS Transmitted TFCs on an SCCPCH with a certain spreading factor. Range: Number of frames with TFC13

Data Source

NodeB

Source Field

pmMbmsSccpchTransmittedTfc

Source Section

Sccpch

pmMbmsSccpchTransmittedTfc_15

MBMS Transmitted TFCs on an SCCPCH with a certain spreading factor. Range: Number of frames with TFC14

Data Source

NodeB

Source Field

pmMbmsSccpchTransmittedTfc

Source Section

Sccpch

© Copyright IBM Corp. 2008, 2009. All Rights Reserved.

pmMbmsSccpchTransmittedTfc_16

MBMS Transmitted TFCs on an SCCPCH with a certain spreading factor. Range: Number of frames with TFC15

Data Source

NodeB

Source Field

pmMbmsSccpchTransmittedTfc

Source Section

Sccpch

pmMbmsSccpchTransmittedTfc_17

MBMS Transmitted TFCs on an SCCPCH with a certain spreading factor. Range: Number of frames with TFC16

Data Source

NodeB

Source Field

pmMbmsSccpchTransmittedTfc

Source Section

Sccpch

pmMbmsSccpchTransmittedTfc_18

MBMS Transmitted TFCs on an SCCPCH with a certain spreading factor. Range: Number of frames with TFC17

Data Source

NodeB

Source Field

pmMbmsSccpchTransmittedTfc

Source Section

Sccpch

pmMbmsSccpchTransmittedTfc_19

MBMS Transmitted TFCs on an SCCPCH with a certain spreading factor. Range: Number of frames with TFC18

Data Source

NodeB

Source Field

pmMbmsSccpchTransmittedTfc

Source Section

Sccpch

pmMbmsSccpchTransmittedTfc_20

MBMS Transmitted TFCs on an SCCPCH with a certain spreading factor. Range: Number of frames with TFC19

Data Source

NodeB

Source Field

pmMbmsSccpchTransmittedTfc

Source Section

Sccpch

pmMbmsSccpchTransmittedTfc_21

MBMS Transmitted TFCs on an SCCPCH with a certain spreading factor. Range: Number of frames with TFC20

Data Source

NodeB

Source Field

pmMbmsSccpchTransmittedTfc

Source Section

Sccpch

© Copyright IBM Corp. 2008, 2009. All Rights Reserved.

pmNoOfTfc1OnFach1

The number of transmitted Transport Format Combination1 (TFC1) frames on Forward Access Channel1 (FACH1), per GP

Source Field

pmNoOfTfc1OnFach1

Source Section

Sccpch

pmNoOfTfc2OnFach1

The number of transmitted Transport Format Combination2 (TFC2) frames on Forward Access Channel1 (FACH1), per GP

Source Field

pmNoOfTfc2OnFach1

Source Section

Sccpch

pmNoOfTfc3OnFach2

The number of transmitted Transport Format Combination2 (TFC2) frames on Forward Access Channel3 (FACH3), per GP

Data Source

NodeB

Source Field

pmNoOfTfc3OnFach2

Source Section

DownlinkBaseBandPool

SccpPolicing_NodeB Primitive Calculations

The following is a list of primitive calculations for the SccpPolicing_NodeB entity.

GRAPHmultiLineSeparator

Special Control Field for Multi-Line Graphs

Calculation

```
""
```

NUMDAYS

of days in Report

Calculation

```
DAYSINREPORT()
```

NUMHOURS

of hours in Summation Data

Calculation

SccpPolicing_NodeB Peg Counts

The following is a list of peg counts for the SccpPolicing_NodeB entity.

pmNoOfRejectMsg

The total number of rejected messages.

Data Source

NodeB_RXI

Source Field

pmNoOfRejectMsg

Source Section

SccpPolicing

SccpPolicing_RNC Primitive Calculations

The following is a list of primitive calculations for the SccpPolicing_RNC entity.

GRAPHmultiLineSeparator

Special Control Field for Multi-Line Graphs

Calculation

```
""
```

© Copyright IBM Corp. 2008, 2009. All Rights Reserved.

NUMDAYS

of days in Report

Calculation

```
DAYSINREPORT()
```

NUMHOURS

of hours in Summation Data

Calculation

SccpPolicing_RNC Peg Counts

The following is a list of peg counts for the SccpPolicing_RNC entity.

pmNoOfRejectMsg

The total number of rejected messages.

Data Source

RNC_RXI

Source Field

pmNoOfRejectMsg

Source Section

SccpPolicing

SccpScrc_NodeB Primitive Calculations

The following is a list of primitive calculations for the SccpScrc_NodeB entity.

GRAPHmultiLineSeparator

Special Control Field for Multi-Line Graphs

Calculation

```
""
```

NUMDAYS

of days in Report

Calculation

```
DAYSINREPORT()
```

NUMHOURS

of hours in Summation Data

Calculation

SccpScrc_NodeB Peg Counts

The following is a list of peg counts for the SccpScrc_NodeB entity.

PERLENSEC

Period length in seconds

Data Source

NodeB_RNC_RXI

Source Field

perlensec

Source Section

SccpScrc_NodeB_WMGeneral

PERLENSEC_K

Period length in seconds aggregation summation in time domain and aggregation maximum between Network Elements.

Data Source

NodeB_RNC_RXI

Source Field

perlensec

Source Section

SccpScrc_NodeB_WMGeneral

pmNoOfConnectFailure

Performance monitoring counter for number of routing failures.

© Copyright IBM Corp. 2008, 2009. All Rights Reserved.

Data Source

NodeB_RNC_RXI

Source Field

pmNoOfConnectFailure

Source Section

SccpScrc_NodeB

pmNoOfHopCounterViolation

Performance monitoring counter for number of hop counter violations.

Data Source

NodeB_RNC_RXI

Source Field

pmNoOfHopCounterViolation

Source Section

SccpScrc_NodeB

pmNoOfRoutingFailNetworkCongest

Performance monitoring counter for Nr of routing failures due to network cong.

Data Source

NodeB_RNC_RXI

Source Field

pmNoOfRoutingFailNetworkCongest

Source Section

SccpScrc_NodeB

pmNoOfRoutingFailNoTransAddrOfSuchNature

Perf monitoring counter for Nr of routing failures

Data Source

NodeB_RNC_RXI

Source Field

pmNoOfRoutingFailNoTransAddrOfSuchNature

Source Section

SccpScrc_NodeB

pmNoOfRoutingFailNoTransSpecificAddr

Perf monit counter Nr routing fail due to being no translation specific address

Data Source

NodeB_RNC_RXI

Source Field

pmNoOfRoutingFailNoTransSpecificAddr

Source Section

SccpScrc_NodeB

pmNoOfRoutingFailReasonUnknown

Perf monitoring counter for Nr of routing failures due to unknown reason.

Data Source

NodeB_RNC_RXI

Source Field

pmNoOfRoutingFailReasonUnknown

Source Section

SccpScrc_NodeB

pmNoOfRoutingFailSubsysUnavail

Perf monitoring counter Nr routing failures due destination subsystem unavail.

Data Source

NodeB_RNC_RXI

Source Field

pmNoOfRoutingFailSubsysUnavail

© Copyright IBM Corp. 2008, 2009. All Rights Reserved.

Source Section

SccpScrc_NodeB

pmNoOfRoutingFailUnequippedSubsys

Perf monitoring counter for Nr of routing failures due to unequipped subsystem.

Data Source

NodeB_RNC_RXI

Source Field

pmNoOfRoutingFailUnequippedSubsys

Source Section

SccpScrc_NodeB

pmNoOfRoutingFailure

Performance monitoring counter for number of routing failures.

Data Source

NodeB_RNC_RXI

Source Field

pmNoOfRoutingFailure

Source Section

SccpScrc_NodeB

pmNoOfRoutingFailurePointCodeUnAvail

Perf monitoring counter for Nr of routing failures

Data Source

NodeB_RNC_RXI

Source Field

pmNoOfRoutingFailurePointCodeUnAvail

Source Section

SccpScrc_NodeB

SccpScrc_RNC Primitive Calculations

The following is a list of primitive calculations for the SccpScrc_RNC entity.

GRAPHmultiLineSeparator

Special Control Field for Multi-Line Graphs

Calculation

```
""
```

NUMDAYS

of days in Report

Calculation

```
DAYSINREPORT()
```

NUMHOURS

of hours in Summation Data

Calculation

SccpScrc_RNC Peg Counts

The following is a list of peg counts for the SccpScrc_RNC entity.

PERLENSEC

Period length in seconds

Data Source

NodeB_RNC_RXI

Source Field

perlensec

Source Section

SccpScrc_RNC_WMGeneral

PERLENSEC_K

Period length in seconds aggregation summation in time domain and aggregation maximum between Network Elements.

© Copyright IBM Corp. 2008, 2009. All Rights Reserved.

Data Source

NodeB_RNC_RXI

Source Field

perlensec

Source Section

SccpScrc_RNC_WMGeneral

pmNoOfConnectFailure

Performance monitoring counter for number of connect failures.

Data Source

NodeB_RNC_RXI

Source Field

pmNoOfConnectFailure

Source Section

SccpScrc_RNC

pmNoOfHopCounterViolation

Performance monitoring counter for number of hop counter violations.

Data Source

NodeB_RNC_RXI

Source Field

pmNoOfHopCounterViolation

Source Section

SccpScrc_RNC

pmNoOfRoutingFailNetworkCongest

Performance monitoring counter for Nr of routing failures due to network cong.

Data Source

NodeB_RNC_RXI

Source Field

pmNoOfRoutingFailNetworkCongest

Source Section

SccpScrc_RNC

pmNoOfRoutingFailNoTransAddrOfSuchNature

Perf monitoring counter for Nr of routing failures

Data Source

NodeB_RNC_RXI

Source Field

pmNoOfRoutingFailNoTransAddrOfSuchNature

Source Section

SccpScrc_RNC

pmNoOfRoutingFailNoTransSpecificAddr

Perf monit counter Nr routing fail due to being no translation specific address

Data Source

NodeB_RNC_RXI

Source Field

pmNoOfRoutingFailNoTransSpecificAddr

Source Section

SccpScrc_RNC

pmNoOfRoutingFailReasonUnknown

Perf monitoring counter for Nr of routing failures due to unknown reason.

Data Source

NodeB_RNC_RXI

Source Field

pmNoOfRoutingFailReasonUnknown

© Copyright IBM Corp. 2008, 2009. All Rights Reserved.

Source Section

SccpScrc_RNC

pmNoOfRoutingFailSubsysUnavail

Perf monitoring counter Nr routing failures due destination subsystem unavail.

Data Source

NodeB_RNC_RXI

Source Field

pmNoOfRoutingFailSubsysUnavail

Source Section

SccpScrc_RNC

pmNoOfRoutingFailUnequippedSubsys

Perf monitoring counter for Nr of routing failures due to unequipped subsystem.

Data Source

NodeB_RNC_RXI

Source Field

pmNoOfRoutingFailUnequippedSubsys

Source Section

SccpScrc_RNC

pmNoOfRoutingFailure

Performance monitoring counter for number of routing failures.

Data Source

NodeB_RNC_RXI

Source Field

pmNoOfRoutingFailure

Source Section

SccpScrc_RNC

pmNoOfRoutingFailurePointCodeUnAvail

Perf monitoring counter for Nr of routing failures

Data Source

NodeB_RNC_RXI

Source Field

pmNoOfRoutingFailurePointCodeUnAvail

Source Section

SccpScrc_RNC

SccpSp_NodeB Primitive Calculations

The following is a list of primitive calculations for the SccpSp_NodeB entity.

GRAPHmultiLineSeparator

Special Control Field for Multi-Line Graphs

Calculation

```
""
```

NUMDAYS

of days in Report

Calculation

```
DAYSINREPORT()
```

NUMHOURS

of hours in Summation Data

Calculation

SccpSp_NodeB Peg Counts

The following is a list of peg counts for the SccpSp_NodeB entity.

PERLENSEC

Period length in seconds

© Copyright IBM Corp. 2008, 2009. All Rights Reserved.

Data Source

NodeB_RNC_RXI

Source Field

perlensec

Source Section

SccpSp_NodeB_WMGeneral

PERLENSEC_K

Period length in seconds aggregation summation in time domain and aggregation maximum between Network Elements.

Data Source

NodeB_RNC_RXI

Source Field

perlensec

Source Section

SccpSp_NodeB_WMGeneral

pmNoOfConInUseExceedHighWaterMark

Number of connections in use that were exceeded the high watermark threshold.

Data Source

NodeB_RNC_RXI

Source Field

pmNoOfConInUseExceedHighWaterMark

Source Section

SccpSp_NodeB

pmNoOfConInUseReceededLowWaterMark

Number of connections in use that were receded the low watermark threshold.

Data Source

NodeB_RNC_RXI

Source Field

pmNoOfConInUseReceededLowWaterMark

Source Section

SccpSp_NodeB

pmNoOfCREFRecFromNL

Number of CREF messages received from NL.

Data Source

NodeB_RNC_RXI

Source Field

pmNoOfCREFRecFromNL

Source Section

SccpSp_NodeB

pmNoOfCREFSentToNL

Number of CREF messages sent to NL.

Data Source

NodeB_RNC_RXI

Source Field

pmNoOfCREFSentToNL

Source Section

SccpSp_NodeB

pmNoOfCRRec

Number of received CRs.

Data Source

NodeB_RNC_RXI

© Copyright IBM Corp. 2008, 2009. All Rights Reserved.

Source Field

pmNoOfCRRec

Source Section

SccpSp_NodeB

pmNoOfCRSent

Number of sent CRs.

Data Source

NodeB_RNC_RXI

Source Field

pmNoOfCRSent

Source Section

SccpSp_NodeB

pmNoOfDT1Rec

Number of received DT1s.

Data Source

NodeB_RNC_RXI

Source Field

pmNoOfDT1Rec

Source Section

SccpSp_NodeB

pmNoOfDT1Sent

Number of sent DT1s.

Data Source

NodeB_RNC_RXI

Source Field

pmNoOfDT1Sent

Source Section

SccpSp_NodeB

pmNoOfERRRec

Number of received ERRs.

Data Source

NodeB_RNC_RXI

Source Field

pmNoOfERRRec

Source Section

SccpSp_NodeB

pmNoOfERRSent

Number of sent ERRs.

Data Source

NodeB_RNC_RXI

Source Field

pmNoOfERRSent

Source Section

SccpSp_NodeB

pmNoOfRLSDRecFromNL

Number of RLSD messages received from NL.

Data Source

NodeB_RNC_RXI

Source Field

pmNoOfRLSDRecFromNL

Source Section

SccpSp_NodeB

© Copyright IBM Corp. 2008, 2009. All Rights Reserved.

pmNoOfRLSDSentToNL

Number of RLSD messages sent to NL.

Data Source

NodeB_RNC_RXI

Source Field

pmNoOfRLSDSentToNL

Source Section

SccpSp_NodeB

pmNoOfSubsysAllowedSent

Number of sent SSAs, subsystem allowed.

Data Source

NodeB_RNC_RXI

Source Field

pmNoOfSubsysAllowedSent

Source Section

SccpSp_NodeB

pmNoOfUDTRec

Number of received UDTs.

Data Source

NodeB_RNC_RXI

Source Field

pmNoOfUDTRec

Source Section

SccpSp_NodeB

pmNoOfUDTSent

Number of sent UDTs.

Data Source

NodeB_RNC_RXI

Source Field

pmNoOfUDTSent

Source Section

SccpSp_NodeB

pmNoOfUDTSRec

Number of received UDTSs.

Data Source

NodeB_RNC_RXI

Source Field

pmNoOfUDTSRec

Source Section

SccpSp_NodeB

pmNoOfUDTSSent

Number of sent UDTSs.

Data Source

NodeB_RNC_RXI

Source Field

pmNoOfUDTSSent

Source Section

SccpSp_NodeB

pmNoOfXUDTRec

Performance Management counter for number of received XUDTs.

Data Source

NodeB_RNC_RXI

© Copyright IBM Corp. 2008, 2009. All Rights Reserved.

Source Field

pmNoOfXUDTRec

Source Section

SccpSp_NodeB

pmNoOfXUDTSent

Number of sent XUDTs.

Data Source

NodeB_RNC_RXI

Source Field

pmNoOfXUDTSent

Source Section

SccpSp_NodeB

pmNoOfXUDTSRec

Number of received XUDTSs.

Data Source

NodeB_RNC_RXI

Source Field

pmNoOfXUDTSRec

Source Section

SccpSp_NodeB

pmNoOfXUDTSSent

Number of sent XUDTSs.

Data Source

NodeB_RNC_RXI

Source Field

pmNoOfXUDTSSent

Source Section

SccpSp_NodeB

SccpSp_RNC Primitive Calculations

The following is a list of primitive calculations for the SccpSp_RNC entity.

GRAPHmultiLineSeparator

Special Control Field for Multi-Line Graphs

Calculation

```
""
```

NUMDAYS

of days in Report

Calculation

```
DAYSINREPORT()
```

NUMHOURS

of hours in Summation Data

Calculation

SccpSp_RNC Peg Counts

The following is a list of peg counts for the SccpSp_RNC entity.

PERLENSEC

Period length in seconds

Data Source

NodeB_RNC_RXI

Source Field

perlensec

Source Section

SccpSp_RNC_WMGeneral

© Copyright IBM Corp. 2008, 2009. All Rights Reserved.

PERLENSEC_K

Period length in seconds aggregation summation in time domain and aggregation maximum between Network Elements.

Data Source

NodeB_RNC_RXI

Source Field

perlensec

Source Section

SccpSp_RNC_WMGeneral

pmNoOfConInUseExceedHighWaterMark

Number of connections in use that were exceeded the high watermark threshold.

Data Source

NodeB_RNC_RXI

Source Field

pmNoOfConInUseExceedHighWaterMark

Source Section

SccpSp_RNC

pmNoOfConInUseReceededLowWaterMark

Number of connections in use that were receded the low watermark threshold.

Data Source

NodeB_RNC_RXI

Source Field

pmNoOfConInUseReceededLowWaterMark

Source Section

SccpSp_RNC

pmNoOfCREFRecFromNL

Number of CREF messages received from NL.

Data Source

NodeB_RNC_RXI

Source Field

pmNoOfCREFRecFromNL

Source Section

SccpSp_RNC

pmNoOfCREFSentToNL

Number of CREF messages sent to NL.

Data Source

NodeB_RNC_RXI

Source Field

pmNoOfCREFSentToNL

Source Section

SccpSp_RNC

pmNoOfCRRec

Number of received CRs.

Data Source

NodeB_RNC_RXI

Source Field

pmNoOfCRRec

Source Section

SccpSp_RNC

pmNoOfCRSent

Number of sent CRs.

© Copyright IBM Corp. 2008, 2009. All Rights Reserved.

Data Source

NodeB_RNC_RXI

Source Field

pmNoOfCRSent

Source Section

SccpSp_RNC

pmNoOfDT1Rec

Number of received DT1s.

Data Source

NodeB_RNC_RXI

Source Field

pmNoOfDT1Rec

Source Section

SccpSp_RNC

pmNoOfDT1Sent

Number of sent DT1s.

Data Source

NodeB_RNC_RXI

Source Field

pmNoOfDT1Sent

Source Section

SccpSp_RNC

pmNoOfERRRec

Number of received ERRs.

Data Source

NodeB_RNC_RXI

Source Field

pmNoOfERRRec

Source Section

SccpSp_RNC

pmNoOfERRSent

Number of sent ERRs.

Data Source

NodeB_RNC_RXI

Source Field

pmNoOfERRSent

Source Section

SccpSp_RNC

pmNoOfRLSDRecFromNL

Number of RLSD messages received from NL.

Data Source

NodeB_RNC_RXI

Source Field

pmNoOfRLSDRecFromNL

Source Section

SccpSp_RNC

pmNoOfRLSDSentToNL

Number of RLSD messages sent to NL.

Data Source

NodeB_RNC_RXI

Source Field

pmNoOfRLSDSentToNL

© Copyright IBM Corp. 2008, 2009. All Rights Reserved.

Source Section

SccpSp_RNC

pmNoOfSubsysAllowedSent

Number of sent SSAs, subsystem allowed.

Data Source

NodeB_RNC_RXI

Source Field

pmNoOfSubsysAllowedSent

Source Section

SccpSp_RNC

pmNoOfUDTRec

Number of received UDTs.

Data Source

NodeB_RNC_RXI

Source Field

pmNoOfUDTRec

Source Section

SccpSp_RNC

pmNoOfUDTSent

Number of sent UDTs.

Data Source

NodeB_RNC_RXI

Source Field

pmNoOfUDTSent

Source Section

SccpSp_RNC

pmNoOfUDTSRec

Number of received UDTSs.

Data Source

NodeB_RNC_RXI

Source Field

pmNoOfUDTSRec

Source Section

SccpSp_RNC

pmNoOfUDTSSent

Number of sent UDTSs.

Data Source

NodeB_RNC_RXI

Source Field

pmNoOfUDTSSent

Source Section

SccpSp_RNC

pmNoOfXUDTRec

Performance Management counter for number of received XUDTs.

Data Source

NodeB_RNC_RXI

Source Field

pmNoOfXUDTRec

Source Section

SccpSp_RNC

pmNoOfXUDTSent

Number of sent XUDTs.

© Copyright IBM Corp. 2008, 2009. All Rights Reserved.

Data Source

NodeB_RNC_RXI

Source Field

pmNoOfXUDTSent

Source Section

SccpSp_RNC

pmNoOfXUDTSRec

Number of received XUDTSs.

Data Source

NodeB_RNC_RXI

Source Field

pmNoOfXUDTSRec

Source Section

SccpSp_RNC

pmNoOfXUDTSSent

Number of sent XUDTSs.

Data Source

NodeB_RNC_RXI

Source Field

pmNoOfXUDTSSent

Source Section

SccpSp_RNC

Sctp_NodeB Primitive Calculations

The following is a list of primitive calculations for the Sctp_NodeB entity.

GRAPHmultiLineSeparator

Special Control Field for Multi-Line Graphs

Calculation

```
""
```

NUMDAYS

of days in Report

Calculation

```
DAYSINREPORT()
```

NUMHOURS

of hours in Summation Data

Calculation

Sent_SCTP_data_chunks

The total number of sent SCTP data chunks

Calculation

```
vsum ( pmSctpStatSentChunks , pmSctpStatRetransChunks)
```

Sctp_NodeB Peg Counts

The following is a list of peg counts for the Sctp_NodeB entity.

pmSctpAborted

The total number of times that SCTP associations have made a direct transition to the CLOSED state from any state using the primitive ABORT.

Data Source

NodeB_RXI

Source Field

pmSctpAborted

Source Section

Sctp

pmSctpActiveEstab

The total number of times that SCTP associations have made a direct transition to the ESTABLISHED state from the COOKIE-ECHOED state.

© Copyright IBM Corp. 2008, 2009. All Rights Reserved.

Data Source

NodeB_RXI

Source Field

pmSctpActiveEstab

Source Section

Sctp

pmSctpCurrEstab

The current number of SCTP associations for which the current state is either ESTABLISHED, SHUTDOWN-PENDING, or SHUTDOWN-RECEIVED.

Data Source

NodeB_RXI

Source Field

pmSctpCurrEstab

Source Section

Sctp

pmSctpPassiveEstab

The total number of times that SCTP associations have made a direct transition to the ESTABLISHED state from the CLOSED state.

Data Source

NodeB_RXI

Source Field

pmSctpPassiveEstab

Source Section

Sctp

pmSctpShutdowns

The total number of times that SCTP associations have made a direct transition to the CLOSED state from either the SHUTDOWN-SENT state or the SHUTDOWN-ACK-SENT state.

Data Source

NodeB_RXI

Source Field

pmSctpShutdowns

Source Section

Sctp

pmSctpStatAssocOutOfBlue

The total number of out of the blue packets (SCTP packet correctly formed-right checksum- but the receiver is not able to identify the association to which this packet belongs) received by the host.

Data Source

NodeB_RXI

Source Field

pmSctpStatAssocOutOfBlue

Source Section

Sctp

pmSctpStatChecksumErrorCounter

The total number of SCTP packets received from the peers with an invalid checksum.

Data Source

NodeB_RXI

Source Field

pmSctpStatChecksumErrorCounter

Source Section

Sctp

pmSctpStatCommResume

The total number of times SCTP has sent a communication resume indication to the user.

© Copyright IBM Corp. 2008, 2009. All Rights Reserved.

Data Source

NodeB_RXI

Source Field

pmSctpStatCommResume

Source Section

Sctp

pmSctpStatCommStop

The total number of times SCTP has sent a communication stop indication to the user.

Data Source

NodeB_RXI

Source Field

pmSctpStatCommStop

Source Section

Sctp

pmSctpStatFragmentedUserMsg

The total number of fragmented user messages.

Data Source

NodeB_RXI

Source Field

pmSctpStatFragmentedUserMsg

Source Section

Sctp

pmSctpStatOutOfOrderRecChunks

The total number of unordered chunks received from the peers.

Data Source

NodeB_RXI

Source Field

pmSctpStatOutOfOrderRecChunks

Source Section

Sctp

pmSctpStatOutOfOrderSendChunks

The total number of unordered chunks sent to the peers.

Data Source

NodeB_RXI

Source Field

pmSctpStatOutOfOrderSendChunks

Source Section

Sctp

pmSctpStatReassembledUserMsg

The total number of reassembled user messages.

Data Source

NodeB_RXI

Source Field

pmSctpStatReassembledUserMsg

Source Section

Sctp

pmSctpStatRecChunks

The total number of complete data chunks received from the peers (no retransmissions included).

Data Source

NodeB_RXI

© Copyright IBM Corp. 2008, 2009. All Rights Reserved.

Source Field

pmSctpStatRecChunks

Source Section

Sctp

pmSctpStatRecChunksDropped

The total number of sent chunks that SCTP has been forced to drop due to buffer overflow in the receiving buffer.

Data Source

NodeB_RXI

Source Field

pmSctpStatRecChunksDropped

Source Section

Sctp

pmSctpStatReceivedControlChunks

The total number of datagrams received with chunk type id > 0.

Data Source

NodeB_RXI

Source Field

pmSctpStatReceivedControlChunks

Source Section

Sctp

pmSctpStatReceivedPackages

The total number of SCTP packages received.

Data Source

NodeB_RXI

Source Field

pmSctpStatReceivedPackages

Source Section

Sctp

pmSctpStatRetransChunks

The total number of data chunks retransmitted to the peers.

Data Source

NodeB_RXI

Source Field

pmSctpStatRetransChunks

Source Section

Sctp

pmSctpStatSentChunks

The total number of complete data chunks sent to the peers (no retransmissions included).

Data Source

NodeB_RXI

Source Field

pmSctpStatSentChunks

Source Section

Sctp

pmSctpStatSentChunksDropped

The total number of sent chunks that SCTP has been forced to drop due to buffer overflow in the sending buffer.

Data Source

NodeB_RXI

© Copyright IBM Corp. 2008, 2009. All Rights Reserved.

Source Field

pmSctpStatSentChunksDropped

Source Section

Sctp

pmSctpStatSentControlChunks

The total number of datagrams sent with chunk type id > 0.

Data Source

NodeB_RXI

Source Field

pmSctpStatSentControlChunks

Source Section

Sctp

pmSctpStatSentPackages

The total number of SCTP packages sent.

Data Source

NodeB_RXI

Source Field

pmSctpStatSentPackages

Source Section

Sctp

Sctp_RNC Primitive Calculations

The following is a list of primitive calculations for the Sctp_RNC entity.

GRAPHmultiLineSeparator

Special Control Field for Multi-Line Graphs

Calculation

""

NUMDAYS

of days in Report

Calculation

```
DAYSINREPORT()
```

NUMHOURS

of hours in Summation Data

Calculation

Sent_SCTP_data_chunks

The total number of sent SCTP data chunks

Calculation

```
vsum ( pmSctpStatSentChunks , pmSctpStatRetransChunks)
```

Sctp_RNC Peg Counts

The following is a list of peg counts for the Sctp_RNC entity.

pmSctpAborted

The total number of times that SCTP associations have made a direct transition to the CLOSED state from any state using the primitive ABORT.

Data Source

RNC_RXI

Source Field

pmSctpAborted

Source Section

Sctp

pmSctpActiveEstab

The total number of times that SCTP associations have made a direct transition to the ESTABLISHED state from the COOKIE-ECHOED state.

© Copyright IBM Corp. 2008, 2009. All Rights Reserved.

Data Source

RNC_RXI

Source Field

pmSctpActiveEstab

Source Section

Sctp

pmSctpCurrEstab

The current number of SCTP associations for which the current state is either ESTABLISHED, SHUTDOWN-PENDING, or SHUTDOWN-RECEIVED.

Data Source

RNC_RXI

Source Field

pmSctpCurrEstab

Source Section

Sctp

pmSctpPassiveEstab

The total number of times that SCTP associations have made a direct transition to the ESTABLISHED state from the CLOSED state.

Data Source

RNC_RXI

Source Field

pmSctpPassiveEstab

Source Section

Sctp

pmSctpShutdowns

The total number of times that SCTP associations have made a direct transition to the CLOSED state from either the SHUTDOWN-SENT state or the SHUTDOWN-ACK-SENT state.

Data Source

RNC_RXI

Source Field

pmSctpShutdowns

Source Section

Sctp

pmSctpStatAssocOutOfBlue

The total number of out of the blue packets (SCTP packet correctly formed-right checksum- but the receiver is not able to identify the association to which this packet belongs) received by the host.

Data Source

RNC_RXI

Source Field

pmSctpStatAssocOutOfBlue

Source Section

Sctp

pmSctpStatChecksumErrorCounter

The total number of SCTP packets received from the peers with an invalid checksum.

Data Source

RNC_RXI

Source Field

pmSctpStatChecksumErrorCounter

Source Section

Sctp

pmSctpStatCommResume

The total number of times SCTP has sent a communication resume indication to the user.

© Copyright IBM Corp. 2008, 2009. All Rights Reserved.

Data Source

RNC_RXI

Source Field

pmSctpStatCommResume

Source Section

Sctp

pmSctpStatCommStop

The total number of times SCTP has sent a communication stop indication to the user.

Data Source

RNC_RXI

Source Field

pmSctpStatCommStop

Source Section

Sctp

pmSctpStatFragmentedUserMsg

The total number of fragmented user messages.

Data Source

RNC_RXI

Source Field

pmSctpStatFragmentedUserMsg

Source Section

Sctp

pmSctpStatOutOfOrderRecChunks

The total number of unordered chunks received from the peers.

Data Source

RNC_RXI

Source Field

pmSctpStatOutOfOrderRecChunks

Source Section

Sctp

pmSctpStatOutOfOrderSendChunks

The total number of unordered chunks sent to the peers.

Data Source

RNC_RXI

Source Field

pmSctpStatOutOfOrderSendChunks

Source Section

Sctp

pmSctpStatReassembledUserMsg

The total number of reassembled user messages.

Data Source

RNC_RXI

Source Field

pmSctpStatReassembledUserMsg

Source Section

Sctp

pmSctpStatRecChunks

The total number of complete data chunks received from the peers (no retransmissions included).

Data Source

RNC_RXI

© Copyright IBM Corp. 2008, 2009. All Rights Reserved.

Source Field

pmSctpStatRecChunks

Source Section

Sctp

pmSctpStatRecChunksDropped

The total number of sent chunks that SCTP has been forced to drop due to buffer overflow in the receiving buffer.

Data Source

RNC_RXI

Source Field

pmSctpStatRecChunksDropped

Source Section

Sctp

pmSctpStatReceivedControlChunks

The total number of datagrams received with chunk type id > 0.

Data Source

RNC_RXI

Source Field

pmSctpStatReceivedControlChunks

Source Section

Sctp

pmSctpStatReceivedPackages

The total number of SCTP packages received.

Data Source

RNC_RXI

Source Field

pmSctpStatReceivedPackages

Source Section

Sctp

pmSctpStatRetransChunks

The total number of data chunks retransmitted to the peers.

Data Source

RNC_RXI

Source Field

pmSctpStatRetransChunks

Source Section

Sctp

pmSctpStatSentChunks

The total number of complete data chunks sent to the peers (no retransmissions included).

Data Source

RNC_RXI

Source Field

pmSctpStatSentChunks

Source Section

Sctp

pmSctpStatSentChunksDropped

The total number of sent chunks that SCTP has been forced to drop due to buffer overflow in the sending buffer.

Data Source

RNC_RXI

© Copyright IBM Corp. 2008, 2009. All Rights Reserved.

Source Field

pmSctpStatSentChunksDropped

Source Section

Sctp

pmSctpStatSentControlChunks

The total number of datagrams sent with chunk type id > 0.

Data Source

RNC_RXI

Source Field

pmSctpStatSentControlChunks

Source Section

Sctp

pmSctpStatSentPackages

The total number of SCTP packages sent.

Data Source

RNC_RXI

Source Field

pmSctpStatSentPackages

Source Section

Sctp

Sector Primitive Calculations

The following is a list of primitive calculations for the Sector entity.

GRAPHmultiLineSeparator

Special Control Field for Multi-Line Graphs

Calculation

""

Updated: 2009-07-22

NUMDAYS

of days in Report

Calculation

```
DAYSINREPORT()
```

NUMHOURS

of hours in Summation Data

Calculation

Service Primitive Calculations

The following is a list of primitive calculations for the Service entity.

GRAPHmultiLineSeparator

Special Control Field for Multi-Line Graphs

Calculation

```
""
```

NUMDAYS

of days in Report

Calculation

```
DAYSINREPORT()
```

NUMHOURS

of hours in Summation Data

Calculation

Slot_NodeB Primitive Calculations

The following is a list of primitive calculations for the Slot_NodeB entity.

GRAPHmultiLineSeparator

Special Control Field for Multi-Line Graphs

© Copyright IBM Corp. 2008, 2009. All Rights Reserved.

Calculation

```
""
```

NUMDAYS

of days in Report

Calculation

```
DAYSINREPORT()
```

NUMHOURS

of hours in Summation Data

Calculation

Slot_RNC Primitive Calculations

The following is a list of primitive calculations for the Slot_RNC entity.

GRAPHmultiLineSeparator

Special Control Field for Multi-Line Graphs

Calculation

```
""
```

MainProcessorLoadRNC_Slot

Main CPU load % (based on Operating System Enea function).

Calculation

```
AGGR(PlugInUnit_RNC, pmProcessorLoad)
```

NUMDAYS

of days in Report

Calculation

```
DAYSINREPORT()
```

NUMHOURS

of hours in Summation Data

Calculation

SpbDeviceGroup_NodeB Primitive Calculations

The following is a list of primitive calculations for the SpbDeviceGroup_NodeB entity.

GRAPHmultiLineSeparator

Special Control Field for Multi-Line Graphs

Calculation

```
""
```

NUMDAYS

of days in Report

Calculation

```
DAYSINREPORT()
```

NUMHOURS

of hours in Summation Data

Calculation

SpbDeviceGroup_NodeB Peg Counts

The following is a list of peg counts for the SpbDeviceGroup_NodeB entity.

NodeB_RELEASE

Release

Data Source

NodeB_RXI

Source Section

SpbDeviceGroup_NodeB

PERLENSEC

Period Length

Data Source

NodeB_RXI

© Copyright IBM Corp. 2008, 2009. All Rights Reserved.

Source Field

PERLENSEC

Source Section

SpbDeviceGroup_NodeB_WMGeneral

PERLENSEC_K

Period length in seconds aggregation summation in time domain and aggregation maximum between Network Elements.

Data Source

NodeB_RXI

Source Field

PERLENSEC

Source Section

SpbDeviceGroup_NodeB_WMGeneral

SpbDeviceGroup_RNC Primitive Calculations

The following is a list of primitive calculations for the SpbDeviceGroup_RNC entity.

GRAPHmultiLineSeparator

Special Control Field for Multi-Line Graphs

Calculation

```
""
```

NUMDAYS

of days in Report

Calculation

```
DAYSINREPORT()
```

NUMHOURS

of hours in Summation Data

Calculation

SpbDeviceGroup_RNC Peg Counts

The following is a list of peg counts for the SpbDeviceGroup_RNC entity.

PERLENSEC

Period Length

Data Source

RNC_RXI

Source Field

PERLENSEC

Source Section

SpbDeviceGroup_RNC_WMGeneral

PERLENSEC_K

Period length in seconds aggregation summation in time domain and aggregation maximum between Network Elements.

Data Source

RNC_RXI

Source Field

PERLENSEC

Source Section

SpbDeviceGroup_RNC_WMGeneral

RNC_RELEASE

Release

Data Source

RNC_RXI

Source Section

SpbDeviceGroup_RNC

© Copyright IBM Corp. 2008, 2009. All Rights Reserved.

SpbDeviceSet_NodeB Primitive Calculations

The following is a list of primitive calculations for the SpbDeviceSet_NodeB entity.

GRAPHmultiLineSeparator

Special Control Field for Multi-Line Graphs

Calculation

```
""
```

NUMDAYS

of days in Report

Calculation

```
DAYSINREPORT()
```

NUMHOURS

of hours in Summation Data

Calculation

SpbDeviceSet_NodeB Peg Counts

The following is a list of peg counts for the SpbDeviceSet_NodeB entity.

NodeB_RELEASE

Release

Data Source

NodeB_RXI

Source Section

SpbDeviceSet_NodeB

PERLENSEC

Period Length

Data Source

NodeB_RXI

Source Field

PERLENSEC

Source Section

SpbDeviceSet_NodeB_WMGeneral

PERLENSEC_K

Period length in seconds aggregation summation in time domain and aggregation maximum between Network Elements.

Data Source

NodeB_RXI

Source Field

PERLENSEC

Source Section

SpbDeviceSet_NodeB_WMGeneral

SpbDeviceSet_RNC Primitive Calculations

The following is a list of primitive calculations for the SpbDeviceSet_RNC entity.

GRAPHmultiLineSeparator

Special Control Field for Multi-Line Graphs

Calculation

```
""
```

NUMDAYS

of days in Report

Calculation

```
DAYSINREPORT()
```

NUMHOURS

of hours in Summation Data

Calculation

© Copyright IBM Corp. 2008, 2009. All Rights Reserved.

SpbDeviceSet_RNC Peg Counts

The following is a list of peg counts for the SpbDeviceSet_RNC entity.

PERLENSEC

Period Length

Data Source

RNC_RXI

Source Field

PERLENSEC

Source Section

SpbDeviceSet_RNC_WMGeneral

PERLENSEC_K

Period length in seconds aggregation summation in time domain and aggregation maximum between Network Elements.

Data Source

RNC_RXI

Source Field

PERLENSEC

Source Section

SpbDeviceSet_RNC_WMGeneral

RNC_RELEASE

Release

Data Source

RNC_RXI

Source Section

SpbDeviceSet_RNC

SpDevicePool Primitive Calculations

The following is a list of primitive calculations for the SpDevicePool entity.

GRAPHmultiLineSeparator

Special Control Field for Multi-Line Graphs

Calculation

```
""
```

NUMDAYS

of days in Report

Calculation

```
DAYSINREPORT()
```

NUMHOURS

of hours in Summation Data

Sts1SpeTtp_NodeB Primitive Calculations

The following is a list of primitive calculations for the Sts1SpeTtp_NodeB entity.

GRAPHmultiLineSeparator

Special Control Field for Multi-Line Graphs

Calculation

```
""
```

NUMDAYS

of days in Report

Calculation

```
DAYSINREPORT()
```

NUMHOURS

of hours in Summation Data

Calculation

© Copyright IBM Corp. 2008, 2009. All Rights Reserved.

Sts1SpeTtp_NodeB Peg Counts

The following is a list of peg counts for the Sts1SpeTtp_NodeB entity.

NodeB_RELEASE

Release

Data Source

NodeB_RXI

Source Field

NodeB_RELEASE

Source Section

Sts1SpeTtp_NodeB

PERLENSEC

Period length in seconds

Source Field

PERLENSEC

Source Section

Sts1SpeTtp_NodeB_WMGeneral

PERLENSEC_K

Period length in seconds aggregation summation in time domain and aggregation maximum between Network Elements.

Data Source

NodeB_RNC_RXI

Source Field

PERLENSEC

Source Section

Sts1SpeTtp_NodeB_WMGeneral

pmEsp

The total number of Errored Seconds.

Data Source

NodeB_RXI

Source Field

pmEsp

Source Section

Sts1SpeTtp

pmSesp

The total number of Severely Errored Seconds.

Data Source

NodeB_RXI

Source Field

pmSesp

Source Section

Sts1SpeTtp

pmUasp

Transmission Unavailable Seconds (UAS). The accumulated unavailable time in seconds during the interval. Unavailable time starts when 10 consecutive SES are detected (them being part of the unavailable time) and ends when 10 consecutive non-SES are detected.

Data Source

NodeB_RXI

Source Field

pmUasp

Source Section

Sts1SpeTtp

© Copyright IBM Corp. 2008, 2009. All Rights Reserved.

Sts1SpeTtp_RNC Primitive Calculations

The following is a list of primitive calculations for the Sts1SpeTtp_RNC entity.

GRAPHmultiLineSeparator

Special Control Field for Multi-Line Graphs

Calculation

```
""
```

NUMDAYS

of days in Report

Calculation

```
DAYSINREPORT()
```

NUMHOURS

of hours in Summation Data

Calculation

Sts1SpeTtp_RNC Peg Counts

The following is a list of peg counts for the Sts1SpeTtp_RNC entity.

PERLENSEC

Period length in seconds

Source Field

PERLENSEC

Source Section

Sts1SpeTtp_RNC_WMGeneral

PERLENSEC_K

Period length in seconds aggregation summation in time domain and aggregation maximum between Network Elements.

Source Field

PERLENSEC

Source Section

Sts1SpeTtp_RNC_WMGeneral

pmEsp

The total number of Errored Seconds.

Data Source

RNC_RXI

Source Field

pmEsp

Source Section

Sts1SpeTtp

pmSesp

The total number of Severely Errored Seconds.

Data Source

RNC_RXI

Source Field

pmSesp

Source Section

Sts1SpeTtp

pmUasp

Transmission Unavailable Seconds (UAS). The accumulated unavailable time in seconds during the interval. Unavailable time starts when 10 consecutive SES are detected (them being part of the unavailable time) and ends when 10 consecutive non-SES are detected.

Data Source

RNC_RXI

Source Field

pmUasp

© Copyright IBM Corp. 2008, 2009. All Rights Reserved.

Source Section

Sts1SpeTtp

RNC_RELEASE

Release

Data Source

RNC_RXI

Source Field

RNC_RELEASE

Source Section

Sts1SpeTtp_RNC

Sts3CspeTtp_NodeB Primitive Calculations

The following is a list of primitive calculations for the Sts3CspeTtp_NodeB entity.

GRAPHmultiLineSeparator

Special Control Field for Multi-Line Graphs

Calculation

```
""
```

NUMDAYS

of days in Report

Calculation

```
DAYSINREPORT()
```

NUMHOURS

of hours in Summation Data

Calculation

Sts3CspeTtp_NodeB Peg Counts

The following is a list of peg counts for the Sts3CspeTtp_NodeB entity.

NodeB_RELEASE

Release

Data Source

NodeB_RXI

Source Field

NodeB_RELEASE

Source Section

Sts3CspeTtp_NodeB

PERLENSEC

Period length in seconds

Source Field

PERLENSEC

Source Section

Sts3CspeTtp_NodeB_WMGeneral

PERLENSEC_K

Period length in seconds aggregation summation in time domain and aggregation maximum between Network Elements.

Source Field

PERLENSEC

Source Section

Sts3CspeTtp_NodeB_WMGeneral

pmEsp

The total number of Errored Seconds.

Data Source

NodeB_RXI

© Copyright IBM Corp. 2008, 2009. All Rights Reserved.

Source Field

pmEsp

Source Section

Sts3CspeTtp

pmSesp

The total number of Severely Errored Seconds.

Data Source

NodeB_RXI

Source Field

pmSesp

Source Section

Sts3CspeTtp

pmUasp

Transmission Unavailable Seconds (UAS). The accumulated unavailable time in seconds during the interval. Unavailable time starts when 10 consecutive SES are detected (them being part of the unavailable time) and ends when 10 consecutive non-SES are detected.

Data Source

NodeB_RXI

Source Field

pmUasp

Source Section

Sts3CspeTtp

Sts3CspeTtp_RNC Primitive Calculations

The following is a list of primitive calculations for the Sts3CspeTtp_RNC entity.

GRAPHmultiLineSeparator

Special Control Field for Multi-Line Graphs

Calculation

```
""
```

NUMDAYS

of days in Report

Calculation

```
DAYSINREPORT()
```

NUMHOURS

of hours in Summation Data

Calculation

Sts3CspeTtp_RNC Peg Counts

The following is a list of peg counts for the Sts3CspeTtp_RNC entity.

PERLENSEC

Period length in seconds

Source Field

PERLENSEC

Source Section

Sts3CspeTtp_RNC_WMGeneral

PERLENSEC_K

Period length in seconds aggregation summation in time domain and aggregation maximum between Network Elements.

Source Field

PERLENSEC

Source Section

Sts3CspeTtp_RNC_WMGeneral

pmEsp

The total number of Errored Seconds.

© Copyright IBM Corp. 2008, 2009. All Rights Reserved.

Data Source

RNC_RXI

Source Field

pmEsp

Source Section

Sts3CspeTtp

pmSesp

The total number of Severely Errored Seconds.

Data Source

RNC_RXI

Source Field

pmSesp

Source Section

Sts3CspeTtp

pmUasp

Transmission Unavailable Seconds (UAS). The accumulated unavailable time in seconds during the interval. Unavailable time starts when 10 consecutive SES are detected (them being part of the unavailable time) and ends when 10 consecutive non-SES are detected.

Data Source

RNC_RXI

Source Field

pmUasp

Source Section

Sts3CspeTtp

RNC_RELEASE

Release

Data Source

RNC_RXI

Source Field

RNC_RELEASE

Source Section

Sts3CspeTtp_RNC

Subrack_NodeB Primitive Calculations

The following is a list of primitive calculations for the Subrack_NodeB entity.

GRAPHmultiLineSeparator

Special Control Field for Multi-Line Graphs

Calculation

```
""
```

NUMDAYS

of days in Report

Calculation

```
DAYSINREPORT()
```

NUMHOURS

of hours in Summation Data

Calculation

Subrack_RNC Primitive Calculations

The following is a list of primitive calculations for the Subrack_RNC entity.

GRAPHmultiLineSeparator

Special Control Field for Multi-Line Graphs

Calculation

```
""
```

© Copyright IBM Corp. 2008, 2009. All Rights Reserved.

MainProcessorLoadRNC_Subrack

Main CPU load % (based on Operating System Enea function) filtered on Slot=8.

Calculation

```
AGGR(Slot_RNC[stringToInt(LocalKey) == 8], MainProcessorLoadRNC_Slot)
```

NUMDAYS

of days in Report

Calculation

```
DAYSINREPORT()
```

NUMHOURS

of hours in Summation Data

Calculation

System Primitive Calculations

The following is a list of primitive calculations for the System entity.

GRAPHmultiLineSeparator

Special Control Field for Multi-Line Graphs

Calculation

```
""
```

NUMDAYS

of days in Report

Calculation

```
DAYSINREPORT()
```

NUMHOURS

of hours in Summation Data

Calculation

T1Ttp_NodeB Primitive Calculations

The following is a list of primitive calculations for the T1Ttp_NodeB entity.

GRAPHmultiLineSeparator

Special Control Field for Multi-Line Graphs

Calculation

```
""
```

NUMDAYS

of days in Report

Calculation

```
DAYSINREPORT()
```

NUMHOURS

of hours in Summation Data

Calculation

T1Ttp_NodeB Peg Counts

The following is a list of peg counts for the T1Ttp_NodeB entity.

NodeB_RELEASE

Release

Data Source

NodeB_RXI

Source Field

NodeB_RELEASE

Source Section

T1Ttp_NodeB

PERLENSEC

Period length in seconds

© Copyright IBM Corp. 2008, 2009. All Rights Reserved.

Source Field

PERLENSEC

Source Section

T1Ttp_NodeB_WMGeneral

PERLENSEC_K

Period length in seconds aggregation summation in time domain and aggregation maximum between Network Elements.

Source Field

PERLENSEC

Source Section

T1Ttp_NodeB_WMGeneral

pmEs

The total number of Errored Seconds.

Data Source

NodeB_RXI

Source Field

pmEs

Source Section

T1Ttp

pmSes

The total number of Severely Errored Seconds.

Data Source

NodeB_RXI

Source Field

pmSes

Source Section

T1Ttp

pmUas

Transmission Unavailable Seconds (UAS). The accumulated unavailable time in seconds during the interval. Unavailable time starts when 10 consecutive SES are detected (them being part of the unavailable time) and ends when 10 consecutive non-SES are detected.

Data Source

NodeB_RXI

Source Field

pmUas

Source Section

T1Ttp

T1Ttp_RNC Primitive Calculations

The following is a list of primitive calculations for the T1Ttp_RNC entity.

GRAPHmultiLineSeparator

Special Control Field for Multi-Line Graphs

Calculation

```
""
```

NUMDAYS

of days in Report

Calculation

```
DAYSINREPORT()
```

NUMHOURS

of hours in Summation Data

Calculation

© Copyright IBM Corp. 2008, 2009. All Rights Reserved.

T1Ttp_RNC Peg Counts

The following is a list of peg counts for the T1Ttp_RNC entity.

PERLENSEC

Period length in seconds

Source Field

PERLENSEC

Source Section

T1Ttp_RNC_WMGeneral

PERLENSEC_K

Period length in seconds aggregation summation in time domain and aggregation maximum between Network Elements.

Source Field

PERLENSEC

Source Section

T1Ttp_RNC_WMGeneral

pmEs

The total number of Errored Seconds.

Data Source

RNC_RXI

Source Field

pmEs

Source Section

T1Ttp

pmSes

The total number of Severely Errored Seconds.

Data Source

RNC_RXI

Source Field

pmSes

Source Section

T1Ttp

pmUas

Transmission Unavailable Seconds (UAS). The accumulated unavailable time in seconds during the interval. Unavailable time starts when 10 consecutive SES are detected (them being part of the unavailable time) and ends when 10 consecutive non-SES are detected.

Data Source

RNC_RXI

Source Field

pmUas

Source Section

T1Ttp

RNC_RELEASE

Release

Data Source

RNC_RXI

Source Field

RNC_RELEASE

Source Section

T1Ttp_RNC

T3PhysPathTerm_NodeB Primitive Calculations

The following is a list of primitive calculations for the T3PhysPathTerm_NodeB entity.

© Copyright IBM Corp. 2008, 2009. All Rights Reserved.

GRAPHmultiLineSeparator

Special Control Field for Multi-Line Graphs

Calculation

```
""
```

NUMDAYS

of days in Report

Calculation

```
DAYSINREPORT()
```

NUMHOURS

of hours in Summation Data

Calculation

T3PhysPathTerm_NodeB Peg Counts

The following is a list of peg counts for the T3PhysPathTerm_NodeB entity.

NodeB_RELEASE

Release

Data Source

RNC_RXI

Source Field

NodeB_RELEASE

PERLENSEC

Period length in seconds

Data Source

RNC_RXI

Source Field

PERLENSEC

Source Section

T3PhysPathTerm_NodeB_Gen

pmEs

The total number of Errored Seconds.

Data Source

RNC_RXI

Source Field

pmEs

Source Section

T3PhysPathTerm,T3Ttp,E3PhysPathTerm

pmEsCpp

Transmission Errored Seconds (ES) based on C-bit parity. The number of seconds with block errors or equivalent during the PM interval.

Data Source

NodeB_RXI

Source Field

pmEsCpp

Source Section

T3PhysPathTerm

pmSes

The total number of Severely Errored Seconds.

Data Source

RNC_RXI

Source Field

pmSes

© Copyright IBM Corp. 2008, 2009. All Rights Reserved.

Source Section

T3PhysPathTerm,T3Ttp,E3PhysPathTerm

pmSesCpp

Transmission Severely Errored Seconds (SES) based on C-bit parity. The number of seconds during available time that have a severe bit error rate or equivalent during the PM interval.

Data Source

NodeB_RXI

Source Field

pmSesCpp

Source Section

T3PhysPathTerm

pmUas

Transmission Unavailable Seconds (SES).

Data Source

NodeB_RXI

Source Field

pmUas

Source Section

T3PhysPathTerm,T3Ttp,E3PhysPathTerm

T3PhysPathTerm_RNC Primitive Calculations

The following is a list of primitive calculations for the T3PhysPathTerm_RNC entity.

GRAPHmultiLineSeparator

Special Control Field for Multi-Line Graphs

Calculation

""

NUMDAYS

of days in Report

Calculation

```
DAYSINREPORT()
```

NUMHOURS

of hours in Summation Data

Calculation

T3PhysPathTerm_RNC Peg Counts

The following is a list of peg counts for the T3PhysPathTerm_RNC entity.

PERLENSEC

Period length in seconds

Data Source

RNC_RXI

Source Field

PERLENSEC

Source Section

T3PhysPathTerm_RNC_Gen

pmEs

The total number of Errored Seconds.

Data Source

RNC_RXI

Source Field

pmEs

Source Section

T3PhysPathTerm,T3Ttp,E3PhysPathTerm

© Copyright IBM Corp. 2008, 2009. All Rights Reserved.

pmEsCpp

Transmission Errored Seconds (ES) based on C-bit parity. The number of seconds with block errors or equivalent during the PM interval.

Data Source

RNC_RXI

Source Field

pmEsCpp

Source Section

T3PhysPathTerm

pmSes

The total number of Severely Errored Seconds.

Data Source

RNC_RXI

Source Field

pmSes

Source Section

T3PhysPathTerm,T3Ttp,E3PhysPathTerm

pmSesCpp

Transmission Severely Errored Seconds (SES) based on C-bit parity. The number of seconds during available time that have a severe bit error rate or equivalent during the PM interval.

Data Source

RNC_RXI

Source Field

pmSesCpp

Source Section

T3PhysPathTerm

pmUas

Transmission Unavailable Seconds (SES).

Data Source

RNC_RXI

Source Field

pmUas

Source Section

T3PhysPathTerm,T3Ttp,E3PhysPathTerm

RNC_RELEASE

Release

Data Source

RNC_RXI

Source Field

RNC_RELEASE

ToneSenderService Primitive Calculations

The following is a list of primitive calculations for the ToneSenderService entity.

GRAPHmultiLineSeparator

Special Control Field for Multi-Line Graphs

Calculation

```
""
```

NUMDAYS

of days in Report

Calculation

```
DAYSINREPORT()
```

NUMHOURS

of hours in Summation Data

© Copyright IBM Corp. 2008, 2009. All Rights Reserved.

Calculation

p_Seizures_Sucess_Rate

Percentege of Seizures which are sucessful

Calculation

```
100.0 * vsum( pmTotalSeizures, -1 * pmUnsuccSeizures ) / pmTotalSeizures
```

ToneSenderService Peg Counts

The following is a list of peg counts for the ToneSenderService entity.

PERLENSEC

Period length in seconds

Data Source

RNC_RXI

Source Field

PERLENSEC

Source Section

ToneSenderService_Gen

RNC_RELEASE

Release

Data Source

RNC_RXI

Source Field

RNC_RELEASE

Source Section

ToneSenderSer_Gen

TransportNetw_NodeB Primitive Calculations

The following is a list of primitive calculations for the TransportNetw_NodeB entity.

GRAPHmultiLineSeparator

Special Control Field for Multi-Line Graphs

Calculation

```
""
```

NUMDAYS

of days in Report

Calculation

```
DAYSINREPORT()
```

NUMHOURS

of hours in Summation Data

Calculation

TransportNetw_NodeB Peg Counts

The following is a list of peg counts for the TransportNetw_NodeB entity.

PERLENSEC

Period Length

Data Source

NodeB_RXI

Source Field

PERLENSEC

Source Section

Sccpch_WMGeneral

PERLENSEC_K

Period length in seconds aggregation summation in time domain and aggregation maximum between Network Elements.

Data Source

NodeB_RXI

© Copyright IBM Corp. 2008, 2009. All Rights Reserved.

Source Field

PERLENSEC

Source Section

Sccpch_WMGeneral

pmHDelayVarBest10Pct

This counter shows the Highest Delay Variation (see ITU-T Y.1540 for definition of the delay variation) of the best 10% synchronization frames (with the lowest delay) experienced by the active IP synchronization reference during the PM interval.

Data Source

NodeB_RXI

Source Field

pmHDelayVarBest10Pct

Source Section

Synchronization

pmHDelayVarBest1Pct

This counter shows the Highest Delay Variation (see ITU-T Y.1540 for definition of the delay variation) of the best 1% synchronization frames (with the lowest delay) experienced by the active IP synchronization reference during the PM interval.

Data Source

NodeB_RXI

Source Field

pmHDelayVarBest1Pct

Source Section

Synchronization

pmHDelayVarBest50Pct

This counter shows the Highest Delay Variation (see ITU-T Y.1540 for definition of the delay variation) of the best 50% synchronization frames (with the lowest delay) experienced by the active IP synchronization reference during the PM interval.

Data Source

NodeB_RXI

Source Field

pmHDelayVarBest50Pct

Source Section

Synchronization

pmMaxDelayVariation

This counter shows the Maximum Delay Variation (see ITU-T Y.1540 for definition of the delay variation) experienced by the active IP synchronization reference during the PM interval.

Data Source

NodeB_RXI

Source Field

pmMaxDelayVariation

Source Section

Synchronization

TransportNetw_RNC Primitive Calculations

The following is a list of primitive calculations for the TransportNetw_RNC entity.

GRAPHmultiLineSeparator

Special Control Field for Multi-Line Graphs

Calculation

```
""
```

NUMDAYS

of days in Report

Calculation

```
DAYSINREPORT()
```

NUMHOURS

of hours in Summation Data

© Copyright IBM Corp. 2008, 2009. All Rights Reserved.

Calculation

TransportNetw_RNC Peg Counts

The following is a list of peg counts for the TransportNetw_RNC entity.

PERLENSEC

Period Length

Data Source

NodeB_RXI

Source Field

PERLENSEC

Source Section

Sccpch_WMGeneral

PERLENSEC_K

Period length in seconds aggregation summation in time domain and aggregation maximum between Network Elements.

Data Source

NodeB_RXI

Source Field

PERLENSEC

Source Section

Sccpch_WMGeneral

pmHDelayVarBest10Pct

This counter shows the Highest Delay Variation (see ITU-T Y.1540 for definition of the delay variation) of the best 10% synchronization frames (with the lowest delay) experienced by the active IP synchronization reference during the PM interval.

Data Source

RNC_RXI

Source Field

pmHDelayVarBest10Pct

Source Section

Synchronization

pmHDelayVarBest1Pct

This counter shows the Highest Delay Variation (see ITU-T Y.1540 for definition of the delay variation) of the best 1% synchronization frames (with the lowest delay) experienced by the active IP synchronization reference during the PM interval.

Data Source

RNC_RXI

Source Field

pmHDelayVarBest1Pct

Source Section

Synchronization

pmHDelayVarBest50Pct

This counter shows the Highest Delay Variation (see ITU-T Y.1540 for definition of the delay variation) of the best 50% synchronization frames (with the lowest delay) experienced by the active IP synchronization reference during the PM interval.

Data Source

RNC_RXI

Source Field

pmHDelayVarBest50Pct

Source Section

Synchronization

pmMaxDelayVariation

This counter shows the Maximum Delay Variation (see ITU-T Y.1540 for definition of the delay variation) experienced by the active IP synchronization reference during the PM interval.

© Copyright IBM Corp. 2008, 2009. All Rights Reserved.

Data Source

RNC_RXI

Source Field

pmMaxDelayVariation

Source Section

Synchronization

TsService Primitive Calculations

The following is a list of primitive calculations for the TsService entity.

GRAPHmultiLineSeparator

Special Control Field for Multi-Line Graphs

Calculation

```
""
```

NUMDAYS

of days in Report

Calculation

```
DAYSINREPORT()
```

NUMHOURS

of hours in Summation Data

Calculation

p_Seizures_Sucess_Rate

Percentege of Seizures which are sucessful

Calculation

```
100.0 * vsum( pmTotalSeizures, -1 * pmUnsuccSeizures ) / pmTotalSeizures
```

TsService Peg Counts

The following is a list of peg counts for the TsService entity.

PERLENSEC

Period length in seconds

Data Source

RNC_RXI

Source Field

PERLENSEC

Source Section

TsService_Gen

RNC_RELEASE

Release

Data Source

RNC_RXI

Source Field

RNC_RELEASE

Source Section

TsService_Gen

UniSaalTp_NodeB Primitive Calculations

The following is a list of primitive calculations for the UniSaalTp_NodeB entity.

GRAPHmultiLineSeparator

Special Control Field for Multi-Line Graphs

Calculation

```
""
```

NUMDAYS

of days in Report

Calculation

```
DAYSINREPORT()
```

© Copyright IBM Corp. 2008, 2009. All Rights Reserved.

NUMHOURS

of hours in Summation Data

Calculation

UniSaalTp_NodeB Peg Counts

The following is a list of peg counts for the UniSaalTp_NodeB entity.

NodeB_RELEASE

Release

Data Source

NodeB_RNC_RXI

Source Section

UniSaalTp_NodeB

PERLENSEC

Period Length

Data Source

NodeB_RNC_RXI

Source Field

perlensec

Source Section

UniSaalTp_NodeB_WMGeneral

PERLENSEC_K

Period length in seconds aggregation summation in time domain and aggregation maximum between Network Elements.

Data Source

NodeB_RNC_RXI

Source Field

perlensec

Source Section

UniSaalTp_NodeB_WMGeneral

pmLinkInServiceTime

The Acc time in sec the signaling link has been in service since it was created

Data Source

NodeB_RNC_RXI

Source Field

pmLinkInServiceTime

Source Section

UniSaalTp_NodeB

pmNoOfAllSLFailures

Number of all Signaling link failures.

Data Source

NodeB_RNC_RXI

Source Field

pmNoOfAllSLFailures

Source Section

UniSaalTp_NodeB

pmNoOfLocalCongestions

Number of loca cong.This count is incr when sum of SAAL send&retran buff are filled

Data Source

NodeB_RNC_RXI

Source Field

pmNoOfLocalCongestions

© Copyright IBM Corp. 2008, 2009. All Rights Reserved.

Source Section

UniSaalTp_NodeB

pmNoOfNoResponses

Number of no responses detected the last 30 minutes.

Data Source

NodeB_RNC_RXI

Source Field

pmNoOfNoResponses

Source Section

UniSaalTp_NodeB

pmNoOfOtherErrors

Number of other list element errors.

Data Source

NodeB_RNC_RXI

Source Field

pmNoOfOtherErrors

Source Section

UniSaalTp_NodeB

pmNoOfProtocolErrors

Number of unsolicited or inappropriate PDUs.

Data Source

NodeB_RNC_RXI

Source Field

pmNoOfProtocolErrors

Source Section

UniSaalTp_NodeB

pmNoOfReceivedSDUs

Number of successfully received SDUs.

Data Source

NodeB_RNC_RXI

Source Field

pmNoOfReceivedSDUs

Source Section

UniSaalTp_NodeB

pmNoOfRemoteCongestions

Number remote cong. This counter increased when remote side gives SAAL no credit.

Data Source

NodeB_RNC_RXI

Source Field

pmNoOfRemoteCongestions

Source Section

UniSaalTp_NodeB

pmNoOfSentSDUs

Number of successfully sent SDUs.

Data Source

NodeB_RNC_RXI

Source Field

pmNoOfSentSDUs

Source Section

UniSaalTp_NodeB

pmNoOfSequenceDataLosses

Number of data sequences loss.

© Copyright IBM Corp. 2008, 2009. All Rights Reserved.

Data Source

NodeB_RNC_RXI

Source Field

pmNoOfSequenceDataLosses

Source Section

UniSaalTp_NodeB

pmNoOfUnsuccReTransmissions

Number of unsuccessful retransmissions.

Data Source

NodeB_RNC_RXI

Source Field

pmNoOfUnsuccReTransmissions

Source Section

UniSaalTp_NodeB

UniSaalTp_RNC Primitive Calculations

The following is a list of primitive calculations for the UniSaalTp_RNC entity.

GRAPHmultiLineSeparator

Special Control Field for Multi-Line Graphs

Calculation

```
""
```

NUMDAYS

of days in Report

Calculation

```
DAYSINREPORT()
```

NUMHOURS

of hours in Summation Data

Calculation

UniSaalTp_RNC Peg Counts

The following is a list of peg counts for the UniSaalTp_RNC entity.

PERLENSEC

Period Length

Data Source

NodeB_RNC_RXI

Source Field

perlensec

Source Section

UniSaalTp_RNC_WMGeneral

PERLENSEC_K

Period length in seconds aggregation summation in time domain and aggregation maximum between Network Elements.

Data Source

NodeB_RNC_RXI

Source Field

perlensec

Source Section

UniSaalTp_RNC_WMGeneral

pmLinkInServiceTime

The Acc time in sec the signaling link has been in service since it was created

Data Source

NodeB_RNC_RXI

© Copyright IBM Corp. 2008, 2009. All Rights Reserved.

Source Field

pmLinkInServiceTime

Source Section

UniSaalTp_RNC

pmNoOfAllSLFailures

Number of all Signaling link failures.

Data Source

NodeB_RNC_RXI

Source Field

pmNoOfAllSLFailures

Source Section

UniSaalTp_RNC

pmNoOfLocalCongestions

Number of loca cong.This count is incr when sum of SAAL send&retran buff are filled

Data Source

NodeB_RNC_RXI

Source Field

pmNoOfLocalCongestions

Source Section

UniSaalTp_RNC

pmNoOfNoResponses

Number of no responses detected the last 30 minutes.

Data Source

NodeB_RNC_RXI

Source Field

pmNoOfNoResponses

Source Section

UniSaalTp_RNC

pmNoOfOtherErrors

Number of other list element errors.

Data Source

NodeB_RNC_RXI

Source Field

pmNoOfOtherErrors

Source Section

UniSaalTp_RNC

pmNoOfProtocolErrors

Number of unsolicited or inappropriate PDUs.

Data Source

NodeB_RNC_RXI

Source Field

pmNoOfProtocolErrors

Source Section

UniSaalTp_RNC

pmNoOfReceivedSDUs

Number of successfully received SDUs.

Data Source

NodeB_RNC_RXI

Source Field

pmNoOfReceivedSDUs

Source Section

UniSaalTp_RNC

© Copyright IBM Corp. 2008, 2009. All Rights Reserved.

pmNoOfRemoteCongestions

Number remote cong. This counter increased when remote side gives SAAL no credit.

Data Source

NodeB_RNC_RXI

Source Field

pmNoOfRemoteCongestions

Source Section

UniSaalTp_RNC

pmNoOfSentSDUs

Number of successfully sent SDUs.

Data Source

NodeB_RNC_RXI

Source Field

pmNoOfSentSDUs

Source Section

UniSaalTp_RNC

pmNoOfSequenceDataLosses

Number of data sequences loss.

Data Source

NodeB_RNC_RXI

Source Field

pmNoOfSequenceDataLosses

Source Section

UniSaalTp_RNC

pmNoOfUnsuccReTransmissions

Number of unsuccessful retransmissions.

Data Source

NodeB_RNC_RXI

Source Field

pmNoOfUnsuccReTransmissions

Source Section

UniSaalTp_RNC

RNC_RELEASE

Release

Data Source

NodeB_RNC_RXI

Source Section

UniSaalTp_RNC

UplinkBaseBandPool Primitive Calculations

The following is a list of primitive calculations for the UplinkBaseBandPool entity.

GRAPHmultiLineSeparator

Special Control Field for Multi-Line Graphs

Calculation

```
""
```

k_CE_UL_CONG

Number of setup failures due to RAXB pool congestion

Calculation

```
vsum(pmSetupFailuresSf16,pmSetupFailuresSf64)
```

NUMDAYS

of days in Report

Calculation

```
DAYSINREPORT()
```

© Copyright IBM Corp. 2008, 2009. All Rights Reserved.

NUMHOURS

of hours in Summation Data

Calculation

UplinkBaseBandPool Peg Counts

The following is a list of peg counts for the UplinkBaseBandPool entity.

NodeB_RELEASE

Release

Data Source

NodeB_RNC_RXI

Source Section

UplinkBaseBandPool

PERLENSEC

Period Length

Data Source

NodeB_RNC_RXI

Source Field

perlensec

Source Section

UplinkBaseBandPool_WMGeneral

PERLENSEC_K

Period length in seconds aggregation summation in time domain and aggregation maximum between Network Elements.

Data Source

NodeB_RNC

Source Field

perlensec

Source Section

UplinkBaseBandPool_WMGeneral

pmApomcOfRachCap

The average Uplink (UL) Random Access (RAX) capacity usage of the UL Baseband Pool (BBP), in percent. The UL BBP consists of the configured RAX board resources. The percentage used of the maximum UL RAX capacity (channel elements) of the UL BBP, is sample

Data Source

NodeB_RNC_RXI

Source Field

pmApomcOfRachCap

Source Section

UplinkBaseBandPool

pmApomcOfRakeRecUsed

(Removed in RP14.2)The average percentage of maximum capacity for Number of Rake Receivers used on the Uplink baseband pool

Data Source

NodeB_RNC_RXI

Source Field

pmApomcOfRakeRecUsed

Source Section

UplinkBaseBandPool

pmApomcOfUlLinkCap

(Removed in RP14.2)The average used percentage of maximum capacity for Uplink Link Capacity on the Uplink baseband pool

© Copyright IBM Corp. 2008, 2009. All Rights Reserved.

Data Source

NodeB_RNC_RXI

Source Field

pmApomcOfUlLinkCap

Source Section

UplinkBaseBandPool

pmCapacityAllocAttUlCe

The number of attempts to allocate UL Channel Elements.

Data Source

NodeB

Source Field

pmCapacityAllocAttUlCe

Source Section

UplinkBaseBandPool

pmCapacityAllocRejUlCe

The number of attempts to allocate UL Channel Elements that are rejected (related to bin [0] of pmCapacityUlCe).

Data Source

NodeB

Source Field

pmCapacityAllocRejUlCe

Source Section

UplinkBaseBandPool

pmCapacityUlCe_00

The distribution of the UL Channel Element utilization, as percentages of the license limit for the UplinkBaseBandPool. If two baseband pools are used, the licensed capacity of UL Channel Elements is distributed between the two baseband pools according to the parameter NodeBFunction::ulLicFractBBPool2. The licensed capacity is not distributed at delayed

activation of license key, at emergency unlock, when license key value is 9999, and when license key is invalid/missing. Range: Configured license limit

Data Source

NodeB

Source Field

pmCapacityUlCe

Source Section

UplinkBaseBandPool

pmCapacityUlCe_01

The distribution of the UL Channel Element utilization, as percentages of the license limit for the UplinkBaseBandPool. If two baseband pools are used, the licensed capacity of UL Channel Elements is distributed between the two baseband pools according to the parameter NodeBFunction::ulLicFractBBPool2. The licensed capacity is not distributed at delayed activation of license key, at emergency unlock, when license key value is 9999, and when license key is invalid/missing. Range: number of sampled values in range 0..20%

Data Source

NodeB

Source Field

pmCapacityUlCe

Source Section

UplinkBaseBandPool

pmCapacityUlCe_02

The distribution of the UL Channel Element utilization, as percentages of the license limit for the UplinkBaseBandPool. If two baseband pools are used, the licensed capacity of UL Channel Elements is distributed between the two baseband pools according to the parameter NodeBFunction::ulLicFractBBPool2. The licensed capacity is not distributed at delayed activation of license key, at emergency unlock, when license key value is 9999, and when license key is invalid/missing. Range: number of sampled values in range 20..40%

Data Source

NodeB

© Copyright IBM Corp. 2008, 2009. All Rights Reserved.

Source Field

pmCapacityUlCe

Source Section

UplinkBaseBandPool

pmCapacityUlCe_03

The distribution of the UL Channel Element utilization, as percentages of the license limit for the UplinkBaseBandPool. If two baseband pools are used, the licensed capacity of UL Channel Elements is distributed between the two baseband pools according to the parameter NodeBFunction::ulLicFractBBPool2. The licensed capacity is not distributed at delayed activation of license key, at emergency unlock, when license key value is 9999, and when license key is invalid/missing. Range: number of sampled values in range 40..50%

Data Source

NodeB

Source Field

pmCapacityUlCe

Source Section

UplinkBaseBandPool

pmCapacityUlCe_04

The distribution of the UL Channel Element utilization, as percentages of the license limit for the UplinkBaseBandPool. If two baseband pools are used, the licensed capacity of UL Channel Elements is distributed between the two baseband pools according to the parameter NodeBFunction::ulLicFractBBPool2. The licensed capacity is not distributed at delayed activation of license key, at emergency unlock, when license key value is 9999, and when license key is invalid/missing. Range: number of sampled values in range 50..60%

Data Source

NodeB

Source Field

pmCapacityUlCe

Source Section

UplinkBaseBandPool

pmCapacityUlCe_05

The distribution of the UL Channel Element utilization, as percentages of the license limit for the UplinkBaseBandPool. If two baseband pools are used, the licensed capacity of UL Channel Elements is distributed between the two baseband pools according to the parameter NodeBFunction::ulLicFractBBPool2. The licensed capacity is not distributed at delayed activation of license key, at emergency unlock, when license key value is 9999, and when license key is invalid/missing. Range: number of sampled values in range 60..70%

Data Source

NodeB

Source Field

pmCapacityUlCe

Source Section

UplinkBaseBandPool

pmCapacityUlCe_06

The distribution of the UL Channel Element utilization, as percentages of the license limit for the UplinkBaseBandPool. If two baseband pools are used, the licensed capacity of UL Channel Elements is distributed between the two baseband pools according to the parameter NodeBFunction::ulLicFractBBPool2. The licensed capacity is not distributed at delayed activation of license key, at emergency unlock, when license key value is 9999, and when license key is invalid/missing. Range: number of sampled values in range 70..80%

Data Source

NodeB

Source Field

pmCapacityUlCe

Source Section

UplinkBaseBandPool

pmCapacityUlCe_07

The distribution of the UL Channel Element utilization, as percentages of the license limit for the UplinkBaseBandPool. If two baseband pools are used, the licensed capacity of UL Channel Elements is distributed between the two baseband pools according to the parameter NodeBFunction::ulLicFractBBPool2. The licensed capacity is not distributed at delayed activation of license key, at emergency unlock, when license key value is 9999, and when license key is invalid/missing. Range: number of sampled values in range 80..85%

© Copyright IBM Corp. 2008, 2009. All Rights Reserved.

Data Source

NodeB

Source Field

pmCapacityUlCe

Source Section

UplinkBaseBandPool

pmCapacityUlCe_08

The distribution of the UL Channel Element utilization, as percentages of the license limit for the UplinkBaseBandPool. If two baseband pools are used, the licensed capacity of UL Channel Elements is distributed between the two baseband pools according to the parameter NodeBFunction::ulLicFractBBPool2. The licensed capacity is not distributed at delayed activation of license key, at emergency unlock, when license key value is 9999, and when license key is invalid/missing. Range: number of sampled values in range 85..90%

Data Source

NodeB

Source Field

pmCapacityUlCe

Source Section

UplinkBaseBandPool

pmCapacityUlCe_09

The distribution of the UL Channel Element utilization, as percentages of the license limit for the UplinkBaseBandPool. If two baseband pools are used, the licensed capacity of UL Channel Elements is distributed between the two baseband pools according to the parameter NodeBFunction::ulLicFractBBPool2. The licensed capacity is not distributed at delayed activation of license key, at emergency unlock, when license key value is 9999, and when license key is invalid/missing. Range: number of sampled values in range 90..95%

Data Source

NodeB

Source Field

pmCapacityUlCe

Source Section

UplinkBaseBandPool

pmCapacityUlCe_10

The distribution of the UL Channel Element utilization, as percentages of the license limit for the UplinkBaseBandPool. If two baseband pools are used, the licensed capacity of UL Channel Elements is distributed between the two baseband pools according to the parameter NodeBFunction::ulLicFractBBPool2. The licensed capacity is not distributed at delayed activation of license key, at emergency unlock, when license key value is 9999, and when license key is invalid/missing. Range: number of sampled values in range >=95%

Data Source

NodeB

Source Field

pmCapacityUlCe

Source Section

UplinkBaseBandPool

pmHwCePoolEul_00

Counter for the total sum of CEs allocated on the UL hardware. From P7 onwards, the counter should always apply hardware cost according to the current E-DCH licensed ladder in the RBS when reporting CE consumption for EUL. Number in range: 0..10CE

Data Source

NodeB

Source Field

pmHwCePoolEul

Source Section

UplinkBaseBandPool

pmHwCePoolEul_01

Counter for the total sum of CEs allocated on the UL hardware. From P7 onwards, the counter should always apply hardware cost according to the current E-DCH licensed ladder in the RBS when reporting CE consumption for EUL. Number in range: 10..20CE

© Copyright IBM Corp. 2008, 2009. All Rights Reserved.

Data Source

NodeB

Source Field

pmHwCePoolEul

Source Section

UplinkBaseBandPool

pmHwCePoolEul_02

Counter for the total sum of CEs allocated on the UL hardware. From P7 onwards, the counter should always apply hardware cost according to the current E-DCH licensed ladder in the RBS when reporting CE consumption for EUL. Number in range: 20..30CE

Data Source

NodeB

Source Field

pmHwCePoolEul

Source Section

UplinkBaseBandPool

pmHwCePoolEul_03

Counter for the total sum of CEs allocated on the UL hardware. From P7 onwards, the counter should always apply hardware cost according to the current E-DCH licensed ladder in the RBS when reporting CE consumption for EUL. Number in range: 30..40CE

Data Source

NodeB

Source Field

pmHwCePoolEul

Source Section

UplinkBaseBandPool

pmHwCePoolEul_04

Counter for the total sum of CEs allocated on the UL hardware. From P7 onwards, the counter should always apply hardware cost according to the current E-DCH licensed ladder in the RBS when reporting CE consumption for EUL. Number in range: 40..50CE

Data Source

NodeB

Source Field

pmHwCePoolEul

Source Section

UplinkBaseBandPool

pmHwCePoolEul_05

Counter for the total sum of CEs allocated on the UL hardware. From P7 onwards, the counter should always apply hardware cost according to the current E-DCH licensed ladder in the RBS when reporting CE consumption for EUL. Number in range: 50..60CE

Data Source

NodeB

Source Field

pmHwCePoolEul

Source Section

UplinkBaseBandPool

pmHwCePoolEul_06

Counter for the total sum of CEs allocated on the UL hardware. From P7 onwards, the counter should always apply hardware cost according to the current E-DCH licensed ladder in the RBS when reporting CE consumption for EUL. Number in range: 60..70CE

Data Source

NodeB

Source Field

pmHwCePoolEul

© Copyright IBM Corp. 2008, 2009. All Rights Reserved.

Source Section

UplinkBaseBandPool

pmHwCePoolEul_07

Counter for the total sum of CEs allocated on the UL hardware. From P7 onwards, the counter should always apply hardware cost according to the current E-DCH licensed ladder in the RBS when reporting CE consumption for EUL. Number in range: 70..80CE

Data Source

NodeB

Source Field

pmHwCePoolEul

Source Section

UplinkBaseBandPool

pmHwCePoolEul_08

Counter for the total sum of CEs allocated on the UL hardware. From P7 onwards, the counter should always apply hardware cost according to the current E-DCH licensed ladder in the RBS when reporting CE consumption for EUL. Number in range: 80..90CE

Data Source

NodeB

Source Field

pmHwCePoolEul

Source Section

UplinkBaseBandPool

pmHwCePoolEul_09

Counter for the total sum of CEs allocated on the UL hardware. From P7 onwards, the counter should always apply hardware cost according to the current E-DCH licensed ladder in the RBS when reporting CE consumption for EUL. Number in range: 90..100CE

Data Source

NodeB

Source Field

pmHwCePoolEul

Source Section

UplinkBaseBandPool

pmHwCePoolEul_10

Counter for the total sum of CEs allocated on the UL hardware. From P7 onwards, the counter should always apply hardware cost according to the current E-DCH licensed ladder in the RBS when reporting CE consumption for EUL. Number in range: 100..120CE

Data Source

NodeB

Source Field

pmHwCePoolEul

Source Section

UplinkBaseBandPool

pmHwCePoolEul_11

Counter for the total sum of CEs allocated on the UL hardware. From P7 onwards, the counter should always apply hardware cost according to the current E-DCH licensed ladder in the RBS when reporting CE consumption for EUL. Number in range: 120..140CE

Data Source

NodeB

Source Field

pmHwCePoolEul

Source Section

UplinkBaseBandPool

pmHwCePoolEul_12

Counter for the total sum of CEs allocated on the UL hardware. From P7 onwards, the counter should always apply hardware cost according to the current E-DCH licensed ladder in the RBS when reporting CE consumption for EUL. Number in range: 140..160CE

© Copyright IBM Corp. 2008, 2009. All Rights Reserved.

Data Source

NodeB

Source Field

pmHwCePoolEul

Source Section

UplinkBaseBandPool

pmHwCePoolEul_13

Counter for the total sum of CEs allocated on the UL hardware. From P7 onwards, the counter should always apply hardware cost according to the current E-DCH licensed ladder in the RBS when reporting CE consumption for EUL. Number in range: 160..180CE

Data Source

NodeB

Source Field

pmHwCePoolEul

Source Section

UplinkBaseBandPool

pmHwCePoolEul_14

Counter for the total sum of CEs allocated on the UL hardware. From P7 onwards, the counter should always apply hardware cost according to the current E-DCH licensed ladder in the RBS when reporting CE consumption for EUL. Number in range: 180..200CE

Data Source

NodeB

Source Field

pmHwCePoolEul

Source Section

UplinkBaseBandPool

pmHwCePoolEul_15

Counter for the total sum of CEs allocated on the UL hardware. From P7 onwards, the counter should always apply hardware cost according to the current E-DCH licensed ladder in the RBS when reporting CE consumption for EUL. Number in range: 200..220CE

Data Source

NodeB

Source Field

pmHwCePoolEul

Source Section

UplinkBaseBandPool

pmHwCePoolEul_16

Counter for the total sum of CEs allocated on the UL hardware. From P7 onwards, the counter should always apply hardware cost according to the current E-DCH licensed ladder in the RBS when reporting CE consumption for EUL. Number in range: 220..240CE

Data Source

NodeB

Source Field

pmHwCePoolEul

Source Section

UplinkBaseBandPool

pmHwCePoolEul_17

Counter for the total sum of CEs allocated on the UL hardware. From P7 onwards, the counter should always apply hardware cost according to the current E-DCH licensed ladder in the RBS when reporting CE consumption for EUL. Number in range: 240..260CE

Data Source

NodeB

Source Field

pmHwCePoolEul

© Copyright IBM Corp. 2008, 2009. All Rights Reserved.

Source Section

UplinkBaseBandPool

pmHwCePoolEul_18

Counter for the total sum of CEs allocated on the UL hardware. From P7 onwards, the counter should always apply hardware cost according to the current E-DCH licensed ladder in the RBS when reporting CE consumption for EUL. Number in range: 260..280CE

Data Source

NodeB

Source Field

pmHwCePoolEul

Source Section

UplinkBaseBandPool

pmHwCePoolEul_19

Counter for the total sum of CEs allocated on the UL hardware. From P7 onwards, the counter should always apply hardware cost according to the current E-DCH licensed ladder in the RBS when reporting CE consumption for EUL. Number in range: 280..300CE

Data Source

NodeB

Source Field

pmHwCePoolEul

Source Section

UplinkBaseBandPool

pmHwCePoolEul_20

Counter for the total sum of CEs allocated on the UL hardware. From P7 onwards, the counter should always apply hardware cost according to the current E-DCH licensed ladder in the RBS when reporting CE consumption for EUL. Number in range: 300..320CE

Data Source

NodeB

Source Field

pmHwCePoolEul

Source Section

UplinkBaseBandPool

pmHwCePoolEul_21

Counter for the total sum of CEs allocated on the UL hardware. From P7 onwards, the counter should always apply hardware cost according to the current E-DCH licensed ladder in the RBS when reporting CE consumption for EUL. Number in range: 320..340CE

Data Source

NodeB

Source Field

pmHwCePoolEul

Source Section

UplinkBaseBandPool

pmHwCePoolEul_22

Counter for the total sum of CEs allocated on the UL hardware. From P7 onwards, the counter should always apply hardware cost according to the current E-DCH licensed ladder in the RBS when reporting CE consumption for EUL. Number in range: 340..360CE

Data Source

NodeB

Source Field

pmHwCePoolEul

Source Section

UplinkBaseBandPool

pmHwCePoolEul_23

Counter for the total sum of CEs allocated on the UL hardware. From P7 onwards, the counter should always apply hardware cost according to the current E-DCH licensed ladder in the RBS when reporting CE consumption for EUL. Number in range: 360..380CE

© Copyright IBM Corp. 2008, 2009. All Rights Reserved.

Data Source

NodeB

Source Field

pmHwCePoolEul

Source Section

UplinkBaseBandPool

pmHwCePoolEul_24

Counter for the total sum of CEs allocated on the UL hardware. From P7 onwards, the counter should always apply hardware cost according to the current E-DCH licensed ladder in the RBS when reporting CE consumption for EUL. Number in range: 380..400CE

Data Source

NodeB

Source Field

pmHwCePoolEul

Source Section

UplinkBaseBandPool

pmHwCePoolEul_25

Counter for the total sum of CEs allocated on the UL hardware. From P7 onwards, the counter should always apply hardware cost according to the current E-DCH licensed ladder in the RBS when reporting CE consumption for EUL. Number in range: 400..420CE

Data Source

NodeB

Source Field

pmHwCePoolEul

Source Section

UplinkBaseBandPool

pmHwCePoolEul_26

Counter for the total sum of CEs allocated on the UL hardware. From P7 onwards, the counter should always apply hardware cost according to the current E-DCH licensed ladder in the RBS when reporting CE consumption for EUL. Number in range: 420..440CE

Data Source

NodeB

Source Field

pmHwCePoolEul

Source Section

UplinkBaseBandPool

pmHwCePoolEul_27

Counter for the total sum of CEs allocated on the UL hardware. From P7 onwards, the counter should always apply hardware cost according to the current E-DCH licensed ladder in the RBS when reporting CE consumption for EUL. Number in range: 440..460CE

Data Source

NodeB

Source Field

pmHwCePoolEul

Source Section

UplinkBaseBandPool

pmHwCePoolEul_28

Counter for the total sum of CEs allocated on the UL hardware. From P7 onwards, the counter should always apply hardware cost according to the current E-DCH licensed ladder in the RBS when reporting CE consumption for EUL. Number in range: 460..480CE

Data Source

NodeB

Source Field

pmHwCePoolEul

© Copyright IBM Corp. 2008, 2009. All Rights Reserved.

Source Section

UplinkBaseBandPool

pmHwCePoolEul_29

Counter for the total sum of CEs allocated on the UL hardware. From P7 onwards, the counter should always apply hardware cost according to the current E-DCH licensed ladder in the RBS when reporting CE consumption for EUL. Number in range: 480..500CE

Data Source

NodeB

Source Field

pmHwCePoolEul

Source Section

UplinkBaseBandPool

pmHwCePoolEul_30

Counter for the total sum of CEs allocated on the UL hardware. From P7 onwards, the counter should always apply hardware cost according to the current E-DCH licensed ladder in the RBS when reporting CE consumption for EUL. Number in range: 500..520CE

Data Source

NodeB

Source Field

pmHwCePoolEul

Source Section

UplinkBaseBandPool

pmHwCePoolEul_31

Counter for the total sum of CEs allocated on the UL hardware. From P7 onwards, the counter should always apply hardware cost according to the current E-DCH licensed ladder in the RBS when reporting CE consumption for EUL. Number in range: 520..540CE

Data Source

NodeB

Source Field

pmHwCePoolEul

Source Section

UplinkBaseBandPool

pmHwCePoolEul_32

Counter for the total sum of CEs allocated on the UL hardware. From P7 onwards, the counter should always apply hardware cost according to the current E-DCH licensed ladder in the RBS when reporting CE consumption for EUL. Number in range: 540..560CE

Data Source

NodeB

Source Field

pmHwCePoolEul

Source Section

UplinkBaseBandPool

pmHwCePoolEul_33

Counter for the total sum of CEs allocated on the UL hardware. From P7 onwards, the counter should always apply hardware cost according to the current E-DCH licensed ladder in the RBS when reporting CE consumption for EUL. Number in range: 560..580CE

Data Source

NodeB

Source Field

pmHwCePoolEul

Source Section

UplinkBaseBandPool

pmHwCePoolEul_34

Counter for the total sum of CEs allocated on the UL hardware. From P7 onwards, the counter should always apply hardware cost according to the current E-DCH licensed ladder in the RBS when reporting CE consumption for EUL. Number in range: 580..600CE

© Copyright IBM Corp. 2008, 2009. All Rights Reserved.

Data Source

NodeB

Source Field

pmHwCePoolEul

Source Section

UplinkBaseBandPool

pmHwCePoolEul_35

Counter for the total sum of CEs allocated on the UL hardware. From P7 onwards, the counter should always apply hardware cost according to the current E-DCH licensed ladder in the RBS when reporting CE consumption for EUL. Number in range: 600..620CE

Data Source

NodeB

Source Field

pmHwCePoolEul

Source Section

UplinkBaseBandPool

pmHwCePoolEul_36

Counter for the total sum of CEs allocated on the UL hardware. From P7 onwards, the counter should always apply hardware cost according to the current E-DCH licensed ladder in the RBS when reporting CE consumption for EUL. Number in range: 620..640CE

Data Source

NodeB

Source Field

pmHwCePoolEul

Source Section

UplinkBaseBandPool

pmHwCePoolEul_37

Counter for the total sum of CEs allocated on the UL hardware. From P7 onwards, the counter should always apply hardware cost according to the current E-DCH licensed ladder in the RBS when reporting CE consumption for EUL. Number in range: 640..660CE

Data Source

NodeB

Source Field

pmHwCePoolEul

Source Section

UplinkBaseBandPool

pmHwCePoolEul_38

Counter for the total sum of CEs allocated on the UL hardware. From P7 onwards, the counter should always apply hardware cost according to the current E-DCH licensed ladder in the RBS when reporting CE consumption for EUL. Number in range: 660..680CE

Data Source

NodeB

Source Field

pmHwCePoolEul

Source Section

UplinkBaseBandPool

pmHwCePoolEul_39

Counter for the total sum of CEs allocated on the UL hardware. From P7 onwards, the counter should always apply hardware cost according to the current E-DCH licensed ladder in the RBS when reporting CE consumption for EUL. Number in range: 680..700CE

Data Source

NodeB

Source Field

pmHwCePoolEul

© Copyright IBM Corp. 2008, 2009. All Rights Reserved.

Source Section

UplinkBaseBandPool

pmHwCePoolEul_40

Counter for the total sum of CEs allocated on the UL hardware. From P7 onwards, the counter should always apply hardware cost according to the current E-DCH licensed ladder in the RBS when reporting CE consumption for EUL. Number in range: 700..720CE

Data Source

NodeB

Source Field

pmHwCePoolEul

Source Section

UplinkBaseBandPool

pmHwCePoolEul_41

Counter for the total sum of CEs allocated on the UL hardware. From P7 onwards, the counter should always apply hardware cost according to the current E-DCH licensed ladder in the RBS when reporting CE consumption for EUL. Number in range: 720..740CE

Data Source

NodeB

Source Field

pmHwCePoolEul

Source Section

UplinkBaseBandPool

pmHwCePoolEul_42

Counter for the total sum of CEs allocated on the UL hardware. From P7 onwards, the counter should always apply hardware cost according to the current E-DCH licensed ladder in the RBS when reporting CE consumption for EUL. Number in range: 740..760CE

Data Source

NodeB

Source Field

pmHwCePoolEul

Source Section

UplinkBaseBandPool

pmHwCePoolEul_43

Counter for the total sum of CEs allocated on the UL hardware. From P7 onwards, the counter should always apply hardware cost according to the current E-DCH licensed ladder in the RBS when reporting CE consumption for EUL. Number in range: 760..780CE

Data Source

NodeB

Source Field

pmHwCePoolEul

Source Section

UplinkBaseBandPool

pmHwCePoolEul_44

Counter for the total sum of CEs allocated on the UL hardware. From P7 onwards, the counter should always apply hardware cost according to the current E-DCH licensed ladder in the RBS when reporting CE consumption for EUL. Number in range: 780..800CE

Data Source

NodeB

Source Field

pmHwCePoolEul

Source Section

UplinkBaseBandPool

pmHwCePoolEul_45

Counter for the total sum of CEs allocated on the UL hardware. From P7 onwards, the counter should always apply hardware cost according to the current E-DCH licensed ladder in the RBS when reporting CE consumption for EUL. Number in range: 800..820CE

© Copyright IBM Corp. 2008, 2009. All Rights Reserved.

Data Source

NodeB

Source Field

pmHwCePoolEul

Source Section

UplinkBaseBandPool

pmHwCePoolEul_46

Counter for the total sum of CEs allocated on the UL hardware. From P7 onwards, the counter should always apply hardware cost according to the current E-DCH licensed ladder in the RBS when reporting CE consumption for EUL. Number in range: 820..840CE

Data Source

NodeB

Source Field

pmHwCePoolEul

Source Section

UplinkBaseBandPool

pmHwCePoolEul_47

Counter for the total sum of CEs allocated on the UL hardware. From P7 onwards, the counter should always apply hardware cost according to the current E-DCH licensed ladder in the RBS when reporting CE consumption for EUL. Number in range: 840..860CE

Data Source

NodeB

Source Field

pmHwCePoolEul

Source Section

UplinkBaseBandPool

pmHwCePoolEul_48

Counter for the total sum of CEs allocated on the UL hardware. From P7 onwards, the counter should always apply hardware cost according to the current E-DCH licensed ladder in the RBS when reporting CE consumption for EUL. Number in range: 860..880CE

Data Source

NodeB

Source Field

pmHwCePoolEul

Source Section

UplinkBaseBandPool

pmHwCePoolEul_49

Counter for the total sum of CEs allocated on the UL hardware. From P7 onwards, the counter should always apply hardware cost according to the current E-DCH licensed ladder in the RBS when reporting CE consumption for EUL. Number in range: 880..900CE

Data Source

NodeB

Source Field

pmHwCePoolEul

Source Section

UplinkBaseBandPool

pmHwCePoolEul_50

Counter for the total sum of CEs allocated on the UL hardware. From P7 onwards, the counter should always apply hardware cost according to the current E-DCH licensed ladder in the RBS when reporting CE consumption for EUL. Number in range: 900..920CE

Data Source

NodeB

Source Field

pmHwCePoolEul

© Copyright IBM Corp. 2008, 2009. All Rights Reserved.

Source Section

UplinkBaseBandPool

pmHwCePoolEul_51

Counter for the total sum of CEs allocated on the UL hardware. From P7 onwards, the counter should always apply hardware cost according to the current E-DCH licensed ladder in the RBS when reporting CE consumption for EUL. Number in range: 920..940CE

Data Source

NodeB

Source Field

pmHwCePoolEul

Source Section

UplinkBaseBandPool

pmHwCePoolEul_52

Counter for the total sum of CEs allocated on the UL hardware. From P7 onwards, the counter should always apply hardware cost according to the current E-DCH licensed ladder in the RBS when reporting CE consumption for EUL. Number in range: 940..960CE

Data Source

NodeB

Source Field

pmHwCePoolEul

Source Section

UplinkBaseBandPool

pmHwCePoolEul_53

Counter for the total sum of CEs allocated on the UL hardware. From P7 onwards, the counter should always apply hardware cost according to the current E-DCH licensed ladder in the RBS when reporting CE consumption for EUL. Number in range: 960..980CE

Data Source

NodeB

Source Field

pmHwCePoolEul

Source Section

UplinkBaseBandPool

pmHwCePoolEul_54

Counter for the total sum of CEs allocated on the UL hardware. From P7 onwards, the counter should always apply hardware cost according to the current E-DCH licensed ladder in the RBS when reporting CE consumption for EUL. Number in range: 980..1000CE

Data Source

NodeB

Source Field

pmHwCePoolEul

Source Section

UplinkBaseBandPool

pmHwCePoolEul_55

Counter for the total sum of CEs allocated on the UL hardware. From P7 onwards, the counter should always apply hardware cost according to the current E-DCH licensed ladder in the RBS when reporting CE consumption for EUL. Number in range: >= 1000CE

Data Source

NodeB

Source Field

pmHwCePoolEul

Source Section

UplinkBaseBandPool

pmNoOfIbho

Number of movement of connections on the Uplink baseband pool during a 15 minutes period

Data Source

NodeB_RNC_RXI

© Copyright IBM Corp. 2008, 2009. All Rights Reserved.

Source Field

pmNoOfIbho

Source Section

UplinkBaseBandPool

pmNoOfRadioLinksSf128_00

Number of RadioLinks in use (SF128) (minute 1 of 15)

Data Source

NodeB_RNC_RXI

Source Field

pmNoOfRadioLinksSf128

Source Section

UplinkBaseBandPool

pmNoOfRadioLinksSf128_01

Number of RadioLinks in use (SF128) (minute 2 of 15)

Data Source

NodeB_RNC_RXI

Source Field

pmNoOfRadioLinksSf128

Source Section

UplinkBaseBandPool

pmNoOfRadioLinksSf128_02

Number of RadioLinks in use (SF128) (minute 3 of 15)

Data Source

NodeB_RNC_RXI

Source Field

pmNoOfRadioLinksSf128

Source Section

UplinkBaseBandPool

pmNoOfRadioLinksSf128_03

Number of RadioLinks in use (SF128) (minute 4 of 15)

Data Source

NodeB_RNC_RXI

Source Field

pmNoOfRadioLinksSf128

Source Section

UplinkBaseBandPool

pmNoOfRadioLinksSf128_04

Number of RadioLinks in use (SF128) (minute 5 of 15)

Data Source

NodeB_RNC_RXI

Source Field

pmNoOfRadioLinksSf128

Source Section

UplinkBaseBandPool

pmNoOfRadioLinksSf128_05

Number of RadioLinks in use (SF128) (minute 6 of 15)

Data Source

NodeB_RNC_RXI

Source Field

pmNoOfRadioLinksSf128

Source Section

UplinkBaseBandPool

© Copyright IBM Corp. 2008, 2009. All Rights Reserved.

pmNoOfRadioLinksSf128_06

Number of RadioLinks in use (SF128) (minute 7 of 15)

Data Source

NodeB_RNC_RXI

Source Field

pmNoOfRadioLinksSf128

Source Section

UplinkBaseBandPool

pmNoOfRadioLinksSf128_07

Number of RadioLinks in use (SF128) (minute 8 of 15)

Data Source

NodeB_RNC_RXI

Source Field

pmNoOfRadioLinksSf128

Source Section

UplinkBaseBandPool

pmNoOfRadioLinksSf128_08

Number of RadioLinks in use (SF128) (minute 9 of 15)

Data Source

NodeB_RNC_RXI

Source Field

pmNoOfRadioLinksSf128

Source Section

UplinkBaseBandPool

pmNoOfRadioLinksSf128_09

Number of RadioLinks in use (SF128) (minute 10 of 15)

Data Source

NodeB_RNC_RXI

Source Field

pmNoOfRadioLinksSf128

Source Section

UplinkBaseBandPool

pmNoOfRadioLinksSf128_10

Number of RadioLinks in use (SF128) (minute 11 of 15)

Data Source

NodeB_RNC_RXI

Source Field

pmNoOfRadioLinksSf128

Source Section

UplinkBaseBandPool

pmNoOfRadioLinksSf128_11

Number of RadioLinks in use (SF128) (minute 12 of 15)

Data Source

NodeB_RNC_RXI

Source Field

pmNoOfRadioLinksSf128

Source Section

UplinkBaseBandPool

pmNoOfRadioLinksSf128_12

Number of RadioLinks in use (SF128) (minute 13 of 15)

Data Source

NodeB_RNC_RXI

© Copyright IBM Corp. 2008, 2009. All Rights Reserved.

Source Field

pmNoOfRadioLinksSf128

Source Section

UplinkBaseBandPool

pmNoOfRadioLinksSf128_13

Number of RadioLinks in use (SF128) (minute 14 of 15)

Data Source

NodeB_RNC_RXI

Source Field

pmNoOfRadioLinksSf128

Source Section

UplinkBaseBandPool

pmNoOfRadioLinksSf128_14

Number of RadioLinks in use (SF128) (minute 15 of 15)

Data Source

NodeB_RNC_RXI

Source Field

pmNoOfRadioLinksSf128

Source Section

UplinkBaseBandPool

pmNoOfRadioLinksSf16_00

Number of RadioLinks in use (SF16) (minute 1 of 15)

Data Source

NodeB_RNC_RXI

Source Field

pmNoOfRadioLinksSf16

Source Section

UplinkBaseBandPool

pmNoOfRadioLinksSf16_01

Number of RadioLinks in use (SF16) (minute 2 of 15)

Data Source

NodeB_RNC_RXI

Source Field

pmNoOfRadioLinksSf16

Source Section

UplinkBaseBandPool

pmNoOfRadioLinksSf16_02

Number of RadioLinks in use (SF16) (minute 3 of 15)

Data Source

NodeB_RNC_RXI

Source Field

pmNoOfRadioLinksSf16

Source Section

UplinkBaseBandPool

pmNoOfRadioLinksSf16_03

Number of RadioLinks in use (SF16) (minute 4 of 15)

Data Source

NodeB_RNC_RXI

Source Field

pmNoOfRadioLinksSf16

Source Section

UplinkBaseBandPool

© Copyright IBM Corp. 2008, 2009. All Rights Reserved.

pmNoOfRadioLinksSf16_04

Number of RadioLinks in use (SF16) (minute 5 of 15)

Data Source

NodeB_RNC_RXI

Source Field

pmNoOfRadioLinksSf16

Source Section

UplinkBaseBandPool

pmNoOfRadioLinksSf16_05

Number of RadioLinks in use (SF16) (minute 6 of 15)

Data Source

NodeB_RNC_RXI

Source Field

pmNoOfRadioLinksSf16

Source Section

UplinkBaseBandPool

pmNoOfRadioLinksSf16_06

Number of RadioLinks in use (SF16) (minute 7 of 15)

Data Source

NodeB_RNC_RXI

Source Field

pmNoOfRadioLinksSf16

Source Section

UplinkBaseBandPool

pmNoOfRadioLinksSf16_07

Number of RadioLinks in use (SF16) (minute 8 of 15)

Data Source

NodeB_RNC_RXI

Source Field

pmNoOfRadioLinksSf16

Source Section

UplinkBaseBandPool

pmNoOfRadioLinksSf16_08

Number of RadioLinks in use (SF16) (minute 9 of 15)

Data Source

NodeB_RNC_RXI

Source Field

pmNoOfRadioLinksSf16

Source Section

UplinkBaseBandPool

pmNoOfRadioLinksSf16_09

Number of RadioLinks in use (SF16) (minute 10 of 15)

Data Source

NodeB_RNC_RXI

Source Field

pmNoOfRadioLinksSf16

Source Section

UplinkBaseBandPool

pmNoOfRadioLinksSf16_10

Number of RadioLinks in use (SF16) (minute 11 of 15)

Data Source

NodeB_RNC_RXI

© Copyright IBM Corp. 2008, 2009. All Rights Reserved.

Source Field

pmNoOfRadioLinksSf16

Source Section

UplinkBaseBandPool

pmNoOfRadioLinksSf16_11

Number of RadioLinks in use (SF16) (minute 12 of 15)

Data Source

NodeB_RNC_RXI

Source Field

pmNoOfRadioLinksSf16

Source Section

UplinkBaseBandPool

pmNoOfRadioLinksSf16_12

Number of RadioLinks in use (SF16) (minute 13 of 15)

Data Source

NodeB_RNC_RXI

Source Field

pmNoOfRadioLinksSf16

Source Section

UplinkBaseBandPool

pmNoOfRadioLinksSf16_13

Number of RadioLinks in use (SF16) (minute 14 of 15)

Data Source

NodeB_RNC_RXI

Source Field

pmNoOfRadioLinksSf16

Source Section

UplinkBaseBandPool

pmNoOfRadioLinksSf16_14

Number of RadioLinks in use (SF16) (minute 15 of 15)

Data Source

NodeB_RNC_RXI

Source Field

pmNoOfRadioLinksSf16

Source Section

UplinkBaseBandPool

pmNoOfRadioLinksSf256_00

Number of RadioLinks in use (SF256) (minute 1 of 15)

Data Source

NodeB_RNC_RXI

Source Field

pmNoOfRadioLinksSf256

Source Section

UplinkBaseBandPool

pmNoOfRadioLinksSf256_01

Number of RadioLinks in use (SF256) (minute 2 of 15)

Data Source

NodeB_RNC_RXI

Source Field

pmNoOfRadioLinksSf256

Source Section

UplinkBaseBandPool

© Copyright IBM Corp. 2008, 2009. All Rights Reserved.

pmNoOfRadioLinksSf256_02

Number of RadioLinks in use (SF256) (minute 3 of 15)

Data Source

NodeB_RNC_RXI

Source Field

pmNoOfRadioLinksSf256

Source Section

UplinkBaseBandPool

pmNoOfRadioLinksSf256_03

Number of RadioLinks in use (SF256) (minute 4 of 15)

Data Source

NodeB_RNC_RXI

Source Field

pmNoOfRadioLinksSf256

Source Section

UplinkBaseBandPool

pmNoOfRadioLinksSf256_04

Number of RadioLinks in use (SF256) (minute 5 of 15)

Data Source

NodeB_RNC_RXI

Source Field

pmNoOfRadioLinksSf256

Source Section

UplinkBaseBandPool

pmNoOfRadioLinksSf256_05

Number of RadioLinks in use (SF256) (minute 6 of 15)

Data Source

NodeB_RNC_RXI

Source Field

pmNoOfRadioLinksSf256

Source Section

UplinkBaseBandPool

pmNoOfRadioLinksSf256_06

Number of RadioLinks in use (SF256) (minute 7 of 15)

Data Source

NodeB_RNC_RXI

Source Field

pmNoOfRadioLinksSf256

Source Section

UplinkBaseBandPool

pmNoOfRadioLinksSf256_07

Number of RadioLinks in use (SF256) (minute 8 of 15)

Data Source

NodeB_RNC_RXI

Source Field

pmNoOfRadioLinksSf256

Source Section

UplinkBaseBandPool

pmNoOfRadioLinksSf256_08

Number of RadioLinks in use (SF256) (minute 9 of 15)

Data Source

NodeB_RNC_RXI

© Copyright IBM Corp. 2008, 2009. All Rights Reserved.

Source Field

pmNoOfRadioLinksSf256

Source Section

UplinkBaseBandPool

pmNoOfRadioLinksSf256_09

Number of RadioLinks in use (SF256) (minute 10 of 15)

Data Source

NodeB_RNC_RXI

Source Field

pmNoOfRadioLinksSf256

Source Section

UplinkBaseBandPool

pmNoOfRadioLinksSf256_10

Number of RadioLinks in use (SF256) (minute 11 of 15)

Data Source

NodeB_RNC_RXI

Source Field

pmNoOfRadioLinksSf256

Source Section

UplinkBaseBandPool

pmNoOfRadioLinksSf256_11

Number of RadioLinks in use (SF256) (minute 12 of 15)

Data Source

NodeB_RNC_RXI

Source Field

pmNoOfRadioLinksSf256

Source Section

UplinkBaseBandPool

pmNoOfRadioLinksSf256_12

Number of RadioLinks in use (SF256) (minute 13 of 15)

Data Source

NodeB_RNC_RXI

Source Field

pmNoOfRadioLinksSf256

Source Section

UplinkBaseBandPool

pmNoOfRadioLinksSf256_13

Number of RadioLinks in use (SF256) (minute 14 of 15)

Data Source

NodeB_RNC_RXI

Source Field

pmNoOfRadioLinksSf256

Source Section

UplinkBaseBandPool

pmNoOfRadioLinksSf256_14

Number of RadioLinks in use (SF256) (minute 15 of 15)

Data Source

NodeB_RNC_RXI

Source Field

pmNoOfRadioLinksSf256

Source Section

UplinkBaseBandPool

© Copyright IBM Corp. 2008, 2009. All Rights Reserved.

pmNoOfRadioLinksSf32_00

Number of RadioLinks in use (SF32) (minute 1 of 15)

Data Source

NodeB_RNC_RXI

Source Field

pmNoOfRadioLinksSf32

Source Section

UplinkBaseBandPool

pmNoOfRadioLinksSf32_01

Number of RadioLinks in use (SF32) (minute 2 of 15)

Data Source

NodeB_RNC_RXI

Source Field

pmNoOfRadioLinksSf32

Source Section

UplinkBaseBandPool

pmNoOfRadioLinksSf32_02

Number of RadioLinks in use (SF32) (minute 3 of 15)

Data Source

NodeB_RNC_RXI

Source Field

pmNoOfRadioLinksSf32

Source Section

UplinkBaseBandPool

pmNoOfRadioLinksSf32_03

Number of RadioLinks in use (SF32) (minute 4 of 15)

Data Source

NodeB_RNC_RXI

Source Field

pmNoOfRadioLinksSf32

Source Section

UplinkBaseBandPool

pmNoOfRadioLinksSf32_04

Number of RadioLinks in use (SF32) (minute 5 of 15)

Data Source

NodeB_RNC_RXI

Source Field

pmNoOfRadioLinksSf32

Source Section

UplinkBaseBandPool

pmNoOfRadioLinksSf32_05

Number of RadioLinks in use (SF32) (minute 6 of 15)

Data Source

NodeB_RNC_RXI

Source Field

pmNoOfRadioLinksSf32

Source Section

UplinkBaseBandPool

pmNoOfRadioLinksSf32_06

Number of RadioLinks in use (SF32) (minute 7 of 15)

Data Source

NodeB_RNC_RXI

© Copyright IBM Corp. 2008, 2009. All Rights Reserved.

Source Field

pmNoOfRadioLinksSf32

Source Section

UplinkBaseBandPool

pmNoOfRadioLinksSf32_07

Number of RadioLinks in use (SF32) (minute 8 of 15)

Data Source

NodeB_RNC_RXI

Source Field

pmNoOfRadioLinksSf32

Source Section

UplinkBaseBandPool

pmNoOfRadioLinksSf32_08

Number of RadioLinks in use (SF32) (minute 9 of 15)

Data Source

NodeB_RNC_RXI

Source Field

pmNoOfRadioLinksSf32

Source Section

UplinkBaseBandPool

pmNoOfRadioLinksSf32_09

Number of RadioLinks in use (SF32) (minute 10 of 15)

Data Source

NodeB_RNC_RXI

Source Field

pmNoOfRadioLinksSf32

Source Section

UplinkBaseBandPool

pmNoOfRadioLinksSf32_10

Number of RadioLinks in use (SF32) (minute 11 of 15)

Data Source

NodeB_RNC_RXI

Source Field

pmNoOfRadioLinksSf32

Source Section

UplinkBaseBandPool

pmNoOfRadioLinksSf32_11

Number of RadioLinks in use (SF32) (minute 12 of 15)

Data Source

NodeB_RNC_RXI

Source Field

pmNoOfRadioLinksSf32

Source Section

UplinkBaseBandPool

pmNoOfRadioLinksSf32_12

Number of RadioLinks in use (SF32) (minute 13 of 15)

Data Source

NodeB_RNC_RXI

Source Field

pmNoOfRadioLinksSf32

Source Section

UplinkBaseBandPool

© Copyright IBM Corp. 2008, 2009. All Rights Reserved.

pmNoOfRadioLinksSf32_13

Number of RadioLinks in use (SF32) (minute 14 of 15)

Data Source

NodeB_RNC_RXI

Source Field

pmNoOfRadioLinksSf32

Source Section

UplinkBaseBandPool

pmNoOfRadioLinksSf32_14

Number of RadioLinks in use (SF32) (minute 15 of 15)

Data Source

NodeB_RNC_RXI

Source Field

pmNoOfRadioLinksSf32

Source Section

UplinkBaseBandPool

pmNoOfRadioLinksSf4_00

Number of RadioLinks in use (SF4) (minute 1 of 15)

Data Source

NodeB_RNC_RXI

Source Field

pmNoOfRadioLinksSf4

Source Section

UplinkBaseBandPool

pmNoOfRadioLinksSf4_01

Number of RadioLinks in use (SF4) (minute 2 of 15)

Data Source

NodeB_RNC_RXI

Source Field

pmNoOfRadioLinksSf4

Source Section

UplinkBaseBandPool

pmNoOfRadioLinksSf4_02

Number of RadioLinks in use (SF4) (minute 3 of 15)

Data Source

NodeB_RNC_RXI

Source Field

pmNoOfRadioLinksSf4

Source Section

UplinkBaseBandPool

pmNoOfRadioLinksSf4_03

Number of RadioLinks in use (SF4) (minute 4 of 15)

Data Source

NodeB_RNC_RXI

Source Field

pmNoOfRadioLinksSf4

Source Section

UplinkBaseBandPool

pmNoOfRadioLinksSf4_04

Number of RadioLinks in use (SF4) (minute 5 of 15)

Data Source

NodeB_RNC_RXI

© Copyright IBM Corp. 2008, 2009. All Rights Reserved.

Source Field

pmNoOfRadioLinksSf4

Source Section

UplinkBaseBandPool

pmNoOfRadioLinksSf4_05

Number of RadioLinks in use (SF4) (minute 6 of 15)

Data Source

NodeB_RNC_RXI

Source Field

pmNoOfRadioLinksSf4

Source Section

UplinkBaseBandPool

pmNoOfRadioLinksSf4_06

Number of RadioLinks in use (SF4) (minute 7 of 15)

Data Source

NodeB_RNC_RXI

Source Field

pmNoOfRadioLinksSf4

Source Section

UplinkBaseBandPool

pmNoOfRadioLinksSf4_07

Number of RadioLinks in use (SF4) (minute 8 of 15)

Data Source

NodeB_RNC_RXI

Source Field

pmNoOfRadioLinksSf4

Source Section

UplinkBaseBandPool

pmNoOfRadioLinksSf4_08

Number of RadioLinks in use (SF4) (minute 9 of 15)

Data Source

NodeB_RNC_RXI

Source Field

pmNoOfRadioLinksSf4

Source Section

UplinkBaseBandPool

pmNoOfRadioLinksSf4_09

Number of RadioLinks in use (SF4) (minute 10 of 15)

Data Source

NodeB_RNC_RXI

Source Field

pmNoOfRadioLinksSf4

Source Section

UplinkBaseBandPool

pmNoOfRadioLinksSf4_10

Number of RadioLinks in use (SF4) (minute 11 of 15)

Data Source

NodeB_RNC_RXI

Source Field

pmNoOfRadioLinksSf4

Source Section

UplinkBaseBandPool

© Copyright IBM Corp. 2008, 2009. All Rights Reserved.

pmNoOfRadioLinksSf4_11

Number of RadioLinks in use (SF4) (minute 12 of 15)

Data Source

NodeB_RNC_RXI

Source Field

pmNoOfRadioLinksSf4

Source Section

UplinkBaseBandPool

pmNoOfRadioLinksSf4_12

Number of RadioLinks in use (SF4) (minute 13 of 15)

Data Source

NodeB_RNC_RXI

Source Field

pmNoOfRadioLinksSf4

Source Section

UplinkBaseBandPool

pmNoOfRadioLinksSf4_13

Number of RadioLinks in use (SF4) (minute 14 of 15)

Data Source

NodeB_RNC_RXI

Source Field

pmNoOfRadioLinksSf4

Source Section

UplinkBaseBandPool

pmNoOfRadioLinksSf4_14

Number of RadioLinks in use (SF4) (minute 15 of 15)

Data Source

NodeB_RNC_RXI

Source Field

pmNoOfRadioLinksSf4

Source Section

UplinkBaseBandPool

pmNoOfRadioLinksSf64_00

Number of RadioLinks in use (SF64) (minute 1 of 15)

Data Source

NodeB_RNC_RXI

Source Field

pmNoOfRadioLinksSf64

Source Section

UplinkBaseBandPool

pmNoOfRadioLinksSf64_01

Number of RadioLinks in use (SF64) (minute 2 of 15)

Data Source

NodeB_RNC_RXI

Source Field

pmNoOfRadioLinksSf64

Source Section

UplinkBaseBandPool

pmNoOfRadioLinksSf64_02

Number of RadioLinks in use (SF64) (minute 3 of 15)

Data Source

NodeB_RNC_RXI

© Copyright IBM Corp. 2008, 2009. All Rights Reserved.

Source Field

pmNoOfRadioLinksSf64

Source Section

UplinkBaseBandPool

pmNoOfRadioLinksSf64_03

Number of RadioLinks in use (SF64) (minute 4 of 15)

Data Source

NodeB_RNC_RXI

Source Field

pmNoOfRadioLinksSf64

Source Section

UplinkBaseBandPool

pmNoOfRadioLinksSf64_04

Number of RadioLinks in use (SF64) (minute 5 of 15)

Data Source

NodeB_RNC_RXI

Source Field

pmNoOfRadioLinksSf64

Source Section

UplinkBaseBandPool

pmNoOfRadioLinksSf64_05

Number of RadioLinks in use (SF64) (minute 6 of 15)

Data Source

NodeB_RNC_RXI

Source Field

pmNoOfRadioLinksSf64

Source Section

UplinkBaseBandPool

pmNoOfRadioLinksSf64_06

Number of RadioLinks in use (SF64) (minute 7 of 15)

Data Source

NodeB_RNC_RXI

Source Field

pmNoOfRadioLinksSf64

Source Section

UplinkBaseBandPool

pmNoOfRadioLinksSf64_07

Number of RadioLinks in use (SF64) (minute 8 of 15)

Data Source

NodeB_RNC_RXI

Source Field

pmNoOfRadioLinksSf64

Source Section

UplinkBaseBandPool

pmNoOfRadioLinksSf64_08

Number of RadioLinks in use (SF64) (minute 9 of 15)

Data Source

NodeB_RNC_RXI

Source Field

pmNoOfRadioLinksSf64

Source Section

UplinkBaseBandPool

© Copyright IBM Corp. 2008, 2009. All Rights Reserved.

pmNoOfRadioLinksSf64_09

Number of RadioLinks in use (SF64) (minute 10 of 15)

Data Source

NodeB_RNC_RXI

Source Field

pmNoOfRadioLinksSf64

Source Section

UplinkBaseBandPool

pmNoOfRadioLinksSf64_10

Number of RadioLinks in use (SF64) (minute 11 of 15)

Data Source

NodeB_RNC_RXI

Source Field

pmNoOfRadioLinksSf64

Source Section

UplinkBaseBandPool

pmNoOfRadioLinksSf64_11

Number of RadioLinks in use (SF64) (minute 12 of 15)

Data Source

NodeB_RNC_RXI

Source Field

pmNoOfRadioLinksSf64

Source Section

UplinkBaseBandPool

pmNoOfRadioLinksSf64_12

Number of RadioLinks in use (SF64) (minute 13 of 15)

Data Source

NodeB_RNC_RXI

Source Field

pmNoOfRadioLinksSf64

Source Section

UplinkBaseBandPool

pmNoOfRadioLinksSf64_13

Number of RadioLinks in use (SF64) (minute 14 of 15)

Data Source

NodeB_RNC_RXI

Source Field

pmNoOfRadioLinksSf64

Source Section

UplinkBaseBandPool

pmNoOfRadioLinksSf64_14

Number of RadioLinks in use (SF64) (minute 15 of 15)

Data Source

NodeB_RNC_RXI

Source Field

pmNoOfRadioLinksSf64

Source Section

UplinkBaseBandPool

pmNoOfRadioLinksSf8_00

Number of RadioLinks in use (SF8) (minute 1 of 15)

Data Source

NodeB_RNC_RXI

© Copyright IBM Corp. 2008, 2009. All Rights Reserved.

Source Field

pmNoOfRadioLinksSf8

Source Section

UplinkBaseBandPool

pmNoOfRadioLinksSf8_01

Number of RadioLinks in use (SF8) (minute 2 of 15)

Data Source

NodeB_RNC_RXI

Source Field

pmNoOfRadioLinksSf8

Source Section

UplinkBaseBandPool

pmNoOfRadioLinksSf8_02

Number of RadioLinks in use (SF8) (minute 3 of 15)

Data Source

NodeB_RNC_RXI

Source Field

pmNoOfRadioLinksSf8

Source Section

UplinkBaseBandPool

pmNoOfRadioLinksSf8_03

Number of RadioLinks in use (SF8) (minute 4 of 15)

Data Source

NodeB_RNC_RXI

Source Field

pmNoOfRadioLinksSf8

Source Section

UplinkBaseBandPool

pmNoOfRadioLinksSf8_04

Number of RadioLinks in use (SF8) (minute 5 of 15)

Data Source

NodeB_RNC_RXI

Source Field

pmNoOfRadioLinksSf8

Source Section

UplinkBaseBandPool

pmNoOfRadioLinksSf8_05

Number of RadioLinks in use (SF8) (minute 6 of 15)

Data Source

NodeB_RNC_RXI

Source Field

pmNoOfRadioLinksSf8

Source Section

UplinkBaseBandPool

pmNoOfRadioLinksSf8_06

Number of RadioLinks in use (SF8) (minute 7 of 15)

Data Source

NodeB_RNC_RXI

Source Field

pmNoOfRadioLinksSf8

Source Section

UplinkBaseBandPool

© Copyright IBM Corp. 2008, 2009. All Rights Reserved.

pmNoOfRadioLinksSf8_07

Number of RadioLinks in use (SF8) (minute 8 of 15)

Data Source

NodeB_RNC_RXI

Source Field

pmNoOfRadioLinksSf8

Source Section

UplinkBaseBandPool

pmNoOfRadioLinksSf8_08

Number of RadioLinks in use (SF8) (minute 9 of 15)

Data Source

NodeB_RNC_RXI

Source Field

pmNoOfRadioLinksSf8

Source Section

UplinkBaseBandPool

pmNoOfRadioLinksSf8_09

Number of RadioLinks in use (SF8) (minute 10 of 15)

Data Source

NodeB_RNC_RXI

Source Field

pmNoOfRadioLinksSf8

Source Section

UplinkBaseBandPool

pmNoOfRadioLinksSf8_10

Number of RadioLinks in use (SF8) (minute 11 of 15)

Data Source

NodeB_RNC_RXI

Source Field

pmNoOfRadioLinksSf8

Source Section

UplinkBaseBandPool

pmNoOfRadioLinksSf8_11

Number of RadioLinks in use (SF8) (minute 12 of 15)

Data Source

NodeB_RNC_RXI

Source Field

pmNoOfRadioLinksSf8

Source Section

UplinkBaseBandPool

pmNoOfRadioLinksSf8_12

Number of RadioLinks in use (SF8) (minute 13 of 15)

Data Source

NodeB_RNC_RXI

Source Field

pmNoOfRadioLinksSf8

Source Section

UplinkBaseBandPool

pmNoOfRadioLinksSf8_13

Number of RadioLinks in use (SF8) (minute 14 of 15)

Data Source

NodeB_RNC_RXI

© Copyright IBM Corp. 2008, 2009. All Rights Reserved.

Source Field

pmNoOfRadioLinksSf8

Source Section

UplinkBaseBandPool

pmNoOfRadioLinksSf8_14

Number of RadioLinks in use (SF8) (minute 15 of 15)

Data Source

NodeB_RNC_RXI

Source Field

pmNoOfRadioLinksSf8

Source Section

UplinkBaseBandPool

pmNoUlHwLimitEul

PEG Counter for the number of times a scheduling decision is taken to increase the hardware rate of an E-DCH user and there is a need to decrease the hardware rate for another E-DCH user owing to UL hardware resource limitations. Trigger: The counter is stepped when a scheduling decision is taken to increase the hardware rate for an E-DCH user and there is a need to decrease the hardware rate for another E-DCH user owing to UL hardware resource limitations.

Data Source

NodeB

Source Field

pmNoUlHwLimitEul

Source Section

UplinkBaseBandPool

pmSamplesCapacityUlCe

Number of samples in pmSumCapacityUlCe (that is, pmSamplesCapacityUlCe = pmSamplesCapacityUlCe + 1, whenever pmSumCapacityUlCe is to be updated).

Data Source

NodeB

Source Field

pmSamplesCapacityUlCe

Source Section

UplinkBaseBandPool

pmSetupAttemptsSf128

The number of setup attempts on the UL base band pool. Spreading Factor 128

Data Source

NodeB_RNC_RXI

Source Field

pmSetupAttemptsSf128

Source Section

UplinkBaseBandPool

pmSetupAttemptsSf16

The number of setup attempts on the UL base band pool. Spreading Factor 128

Data Source

NodeB_RNC_RXI

Source Field

pmSetupAttemptsSf16

Source Section

UplinkBaseBandPool

pmSetupAttemptsSf256

The number of setup attempts on the UL base band pool. Spreading Factor 256

Data Source

NodeB_RNC_RXI

© Copyright IBM Corp. 2008, 2009. All Rights Reserved.

Source Field

pmSetupAttemptsSf256

Source Section

UplinkBaseBandPool

pmSetupAttemptsSf32

The number of setup attempts on the UL base band pool. Spreading Factor 32

Data Source

NodeB_RNC_RXI

Source Field

pmSetupAttemptsSf32

Source Section

UplinkBaseBandPool

pmSetupAttemptsSf4

The number of setup attempts on the UL base band pool. Spreading Factor 4

Data Source

NodeB_RNC_RXI

Source Field

pmSetupAttemptsSf4

Source Section

UplinkBaseBandPool

pmSetupAttemptsSf64

The number of setup attempts on the UL base band pool. Spreading Factor 64

Data Source

NodeB_RNC_RXI

Source Field

pmSetupAttemptsSf64

Source Section

UplinkBaseBandPool

pmSetupAttemptsSf8

The number of setup attempts on the UL base band pool. Spreading Factor 8

Data Source

NodeB_RNC_RXI

Source Field

pmSetupAttemptsSf8

Source Section

UplinkBaseBandPool

pmSetupFailuresSf128

The no of setup fail due to RAXB cong on UL base band pool. Spreading Factor 128

Data Source

NodeB_RNC_RXI

Source Field

pmSetupFailuresSf128

Source Section

UplinkBaseBandPool

pmSetupFailuresSf16

The no of setup fail due to RAXB cong on UL base band pool. Spreading Factor 16

Data Source

NodeB_RNC_RXI

Source Field

pmSetupFailuresSf16

Source Section

UplinkBaseBandPool

© Copyright IBM Corp. 2008, 2009. All Rights Reserved.

pmSetupFailuresSf256

The no of setup fail due to RAXB cong on UL base band pool. Spreading Factor 256

Data Source

NodeB_RNC_RXI

Source Field

pmSetupFailuresSf256

Source Section

UplinkBaseBandPool

pmSetupFailuresSf32

The no of setup fail due to RAXB cong on UL base band pool. Spreading Factor 32

Data Source

NodeB_RNC_RXI

Source Field

pmSetupFailuresSf32

Source Section

UplinkBaseBandPool

pmSetupFailuresSf4

The no of setup fail due to RAXB cong on UL base band pool. Spreading Factor 4

Data Source

NodeB_RNC_RXI

Source Field

pmSetupFailuresSf4

Source Section

UplinkBaseBandPool

pmSetupFailuresSf64

The no of setup fail due to RAXB cong on UL base band pool. Spreading Factor 64

Data Source

NodeB_RNC_RXI

Source Field

pmSetupFailuresSf64

Source Section

UplinkBaseBandPool

pmSetupFailuresSf8

The no of setup fail due to RAXB cong on UL base band pool. Spreading Factor 8

Data Source

NodeB_RNC_RXI

Source Field

pmSetupFailuresSf8

Source Section

UplinkBaseBandPool

pmSumCapacityUlCe

Aggregate of all sample values (measurement_value) recorded within the ROP for number of used UL Channel Elements.

Data Source

NodeB

Source Field

pmSumCapacityUlCe

Source Section

UplinkBaseBandPool

pmSumSqrCapacityUlCe

Aggregate of the squares of the sample values (measurement_value) in pmSumCapacityUlCe, that is, pmSumSqrCapacityUlCe = pmSumSqrCapacityUlCe + sqr(measurement_value).

© Copyright IBM Corp. 2008, 2009. All Rights Reserved.

Data Source

NodeB

Source Field

pmSumSqrCapacityUlCe

Source Section

UplinkBaseBandPool

pmUIActPeakCapUsage

The actual UL peak capacity use of the Uplink baseband pool during the GP.

Data Source

NodeB

Source Field

pmUIActPeakCapUsage

Source Section

UplinkBaseBandPool

UpMfhService Primitive Calculations

The following is a list of primitive calculations for the UpMfhService entity.

GRAPHmultiLineSeparator

Special Control Field for Multi-Line Graphs

Calculation

```
""
```

NUMDAYS

of days in Report

Calculation

```
DAYSINREPORT()
```

NUMHOURS

of hours in Summation Data

Calculation

p_Seizures_Sucess_Rate

Percentege of Seizures which are sucessful

Calculation

```
100.0 * vsum( pmTotalSeizures, -1 * pmUnsuccSeizures ) / pmTotalSeizures
```

UpMfhService Peg Counts

The following is a list of peg counts for the UpMfhService entity.

PERLENSEC

Period length in seconds

Data Source

RNC_RXI

Source Field

PERLENSEC

Source Section

UpMfhService_Gen

RNC_RELEASE

Release

Data Source

RNC_RXI

Source Field

RNC_RELEASE

Ura Primitive Calculations

The following is a list of primitive calculations for the Ura entity.

GRAPHmultiLineSeparator

Special Control Field for Multi-Line Graphs

© Copyright IBM Corp. 2008, 2009. All Rights Reserved.

Calculation

```
""
```

NUMDAYS

of days in Report

Calculation

```
DAYSINREPORT()
```

NUMHOURS

of hours in Summation Data

Ura Peg Counts

The following is a list of peg counts for the Ura entity.

PERLENSEC

Period length in seconds

Data Source

RNC

Source Field

gp

Source Section

Ura

PERLENSEC_K

Period length in seconds aggregation summation in time domain and aggregation maximum between Network Elements.

Data Source

RNC

Source Field

gp

Source Section

Ura

pmCnInitPagingToUraUe

Number of CN initiated pages attempted for UEs in URA_PCH state.

Data Source

RNC

Source Field

pmCnInitPagingToUraUe

Source Section

Ura

pmSamplesRabUra

Number of samples recorded within the ROP period for number of PS Interactive RABs in URA_PCH.

Data Source

RNC

Source Field

pmSamplesRabUra

Source Section

Ura

pmSumRabUra

Sum of all sample values recorded for number of PS Interactive RABs in URA_PCH.

Data Source

RNC

Source Field

pmSumRabUra

Source Section

Ura

© Copyright IBM Corp. 2008, 2009. All Rights Reserved.

pmUtranInitPagingToUraUe

Number of Utran initiated pages attempted for UEs in URA_PCH state.

Data Source

RNC

Source Field

pmUtranInitPagingToUraUe

Source Section

Ura

UtranCell Primitive Calculations

The following is a list of primitive calculations for the UtranCell entity.

AveCs12Ps0RabEstablish

Average number of active CS12 and PS0 multi-RAB connections (Erlang).

Calculation

```
pmSumCs12Ps0RabEstablish * 1.0 / pmSamplesCs12Ps0RabEstablish
```

AveCs12Ps64RabEstablish

Average number of active CS12 and PS64 multi-RAB connections (Erlang).

Calculation

```
pmSumCs12Ps64RabEstablish * 1.0 / pmSamplesCs12Ps64RabEstablish
```

AveCs12RabEstablish

Average number of active voice 12.2 kbps RAB connections (Erlang).

Calculation

```
pmSumCs12RabEstablish * 1.0 / pmSamplesCs12RabEstablish
```

AveCs57RabEstablish

Average number of active Circuit Switched 57 kbps RAB connections (Erlang).

Calculation

```
pmSumCs57RabEstablish * 1.0 / pmSamplesCs57RabEstablish
```

AveCs64RabEstablish

Average number of active Circuit Switched 64 kbps RAB connections (Erlang).

Calculation

```
pmSumCs64RabEstablish * 1.0 / pmSamplesCs64RabEstablish
```

AvePs128RabEstablish

Average number of active Packet Switched 128 kbps RAB connections (Erlang).

Calculation

```
pmSumPs128RabEstablish * 1.0 / pmSamplesPs128RabEstablish
```

AvePs384RabEstablish

Average number of active Packet Switched 384 kbps RAB connections (Erlang).

Calculation

```
pmSumPs384RabEstablish * 1.0 / pmSamplesPs384RabEstablish
```

AvePs64RabEstablish

Average number of active Packet Switched 64 kbps RAB connections (Erlang).

Calculation

```
pmSumPs64RabEstablish * 1.0 / pmSamplesPs64RabEstablish
```

Average_CS_Speech_Users_per_Cell

The average number of speech users per UtranCell in a measurement period of 15 minutes. The sum is performed on the result of the fraction

Calculation

```
pmSumBestCs12Establish /  pmSamplesBestCs12Establish
```

AverageBestCs12Establish

Average Distict CS Speech Users

Calculation

```
pmSumBestCs12Establish * 1.0 / pmSamplesBestCs12Establish
```

AveRrcOnlyEstablish

Average number of connections with only RRC established (Erlang).

Calculation

```
pmSumRrcOnlyEstablish * 1.0 / pmSamplesRrcOnlyEstablish
```

© Copyright IBM Corp. 2008, 2009. All Rights Reserved.

Cell_Availability

The length of time in seconds that a cell is available for service is defined as cell availability. For example, cell availability during 24 hour period can be calculated. Only Daily reports with 24 hour observation period produce proper value for this PC

Calculation

```
86400 - vsum (pmCellDowntimeAuto , pmCellDowntimeMan )
```

Cell_Availability_Excluding_Planned_Downtime

The length of time in seconds that a cell availability excluding planned or manual downtime for service during the period of operation is defined as cell availability excluding planned downtime. Only Daily reports with 24 hour observation period produce

Calculation

```
100.0 *  ( 86400 - pmCellDowntimeAuto ) / 86400
```

Cell_Availability_UnPlanned_Downtime

The length of time in seconds that a cell availability excluding planned or manual downtime for service during the period of operation is defined as cell availability excluding planned downtime. Only Daily reports with 24 hour observation period produce

Calculation

```
100.0 * ( 86400 - pmCellDowntimeAuto ) / 86400
```

Cell_Unavailability_due_Planned_Down_Time

The length of time in seconds that a cell availability with planned or manual downtime for service during the period of operation is defined as cell availability excluding planned downtime. Only Daily reports with 24 hour observation period produce prop

Calculation

```
100.0 * pmCellDowntimeMan / 86400
```

CELL_UPD_FAIL

% Cell update fail rate (including both periodic and cell reselection)

Calculation

```
(pmNoCellUpdAttempt - pmNoCellUpdSuccess) * 100.0 / pmNoCellUpdAttempt
```

CH_SW_DCH_DCH_FAIL

% Failed channel switching between Dedicated Channels (DCH/DCH)

Calculation

```
pmFailedDchChSwitch * 100.0 / vsum(pmChSwitchSp0Sp64, pmChSwitchSp64Sp0,
pmChSwitchP384P128, pmChSwitchP128P64, pmChSwitchP64P128,
pmChSwitchP128P384, pmNoOfSwDownNgHo)
```

CH_SW_FACH_DCH_FAIL

% Failed channel switching CELL_FACH to CELL_DCH and CELL_DCH to CELL_FACH

Calculation

```
pmFailedChSwitch * 100.0 / vsum(pmChSwitchFachDch, pmChSwitchDch64Fach,
pmChSwitchDch128Fach, pmChSwitchDch384Fach)
```

CS_64_57_Accessibility_Grade_of_Service

The blocking rate for both CS 64 and 57 calls per UtranCell due to admission based on downlink power, downlink channelization code, downlink Average Speech Equivalent (ASE)

Calculation

```
100.0 * pmNoOfNonHoReqDeniedCs /  vsum ( pmNoRabEstablishAttemptCs64 ,
pmNoRabEstablishAttemptCs57 )
```

CS_64_DL_Code_Utilization

The average number of downlink code is occupied for CS 64 traffic per UtranCell in a measurement period

Calculation

```
pmSumCs64RabEstablish / pmSamplesCs64RabEstablish
```

CS_Call_Completion_Succ_Rate_retry_Excluded

The call completion success rate per UtranCell for speech for Directed_retry_Excluded

Calculation

```
CS_Speech_Accessibility_Directed_retry_Excluded  * ( 1 -
CS_Speech_Drop_Rate ) / 100.0
```

CS_Call_Completion_Succ_Rate_retry_Included

The call completion success rate per UtranCell for speech for Directed_retry_Included

Calculation

```
CS_Speech_Accessibility_Directed_retry_Included * ( 1 - CS_Speech_Drop_Rate
) / 100.0
```

CS_Retain_Speech_Drop_Rate

The drop rate per UtranCell for speech

© Copyright IBM Corp. 2008, 2009. All Rights Reserved.

Calculation

```
100.0 * pmNoSystemRabReleaseSpeech /  vsum ( pmNoNormalRabReleaseSpeech ,
pmNoSystemRabReleaseSpeech )
```

CS_Speech_Accessibility_Directed_retry_Excluded

Accessibility success rate per UtranCell for speech where directed-retry was not counted as access failure.

Calculation

```
100.0 * ( pmTotNoRrcConnectReqCsSucc * pmNoRabEstablishSuccessSpeech) / (
pmTotNoRrcConnectReqCs * ( pmNoRabEstablishAttemptSpeech - pmNoDirRetryAtt
) )
```

CS_Speech_Accessibility_Directed_retry_Included

Accessibility success rate per UtranCell for speech where directed-retry was counted as access failure.

Calculation

```
100.0 * ( pmTotNoRrcConnectReqCsSucc * pmNoRabEstablishSuccessSpeech ) /  (
pmTotNoRrcConnectReqCs * pmNoRabEstablishAttemptSpeech )
```

CS_Speech_Downlink_Code_Utilization

The average number of downlink code is occupied for speech traffic per UtranCell in a measurement period of 15 minutes

Calculation

```
pmSumCs12RabEstablish / pmSamplesCs12RabEstablish
```

CS_Speech_Downlink_Code_Utilization_per_Cell

The average number of downlink code is occupied for speech traffic per UtranCell in a measurement period of 15 minutes

Calculation

```
pmSumCs12RabEstablish / pmSamplesCs12RabEstablish
```

CS_Speech_Drop_Rate

The drop rate per UtranCell for speech

Calculation

```
100.0 * pmNoSystemRabReleaseSpeech /  vsum ( pmNoNormalRabReleaseSpeech ,
pmNoSystemRabReleaseSpeech )
```

CS_Speech_Erlang

The average speech traffic Erlang carried per UtranCell . This is best fitted with Erlang definition through hourly report which is the same as 4 consecutive 15 minutes periods.

Calculation

```
pmSumBestCs12Establish / pmSamplesBestCs12Establish
```

CS_Speech_Grade_of_Service

Blocking rate for speech calls per UtranCell due to admission based ondownlink power, downlink channelization code, downlink Average Speech Equivalent (ASE), and uplink Average Speech Equivalent. Note RRC Connection failure rate better approximate speech

Calculation

```
100.0 * pmNoOfNonHoReqDeniedSpeech /  pmNoRabEstablishAttemptSpeech
```

CS_Speech_Grade_of_Service_RRC_Blocking

Signaling failure and blocking for RRC connections that winds up with Circuit-Switched data connection and does not include blocking for multi-RAB establishment for speech. Conversational Call (originating and terminating) RRC connection Success Rate

Calculation

```
100.0 * pmTotNoRrcConnectReqCsSucc /  pmTotNoRrcConnectReqCs
```

CS_Speech_Retainability

The Retainability per UtranCell for speech

Calculation

```
100.0 - ( 100.0 * pmNoSystemRabReleaseSpeech /  vsum ( pmNoNormalRabReleas-
eSpeech , pmNoSystemRabReleaseSpeech ) )
```

CS57_Accessibility

Accessibility success rate per UtranCell for CS streaming

Calculation

```
100.0 * ( pmTotNoRrcConnectReqCsSucc * pmNoRabEstablishSuccessCs57 ) / (
pmTotNoRrcConnectReqCs * pmNoRabEstablishAttemptCs57 )
```

CS57_Call_Completion_Succ_Rate

The call completion success rate per UtranCell for CS streaming

Calculation

```
CS57_Accessibility * ( 1 - CS57_Drop_Rate )  / 100.0
```

© Copyright IBM Corp. 2008, 2009. All Rights Reserved.

CS57_Drop_Rate

The drop rate per UtranCell for CS Streaming

Calculation

```
100.0 * pmNoSystemRabReleaseCsStream / vsum ( pmNoNormalRabReleaseCsStream
, pmNoSystemRabReleaseCsStream )
```

CS57_Retainability

The Retainability per UtranCell for CS Streaming

Calculation

```
100.0 - ( 100.0 * pmNoSystemRabReleaseCsStream / vsum ( pmNoNormalRabRe-
leaseCsStream , pmNoSystemRabReleaseCsStream ) )
```

CS64_Accessibility

Accessibility success rate per UtranCell for CS 64

Calculation

```
100.0 * ( pmTotNoRrcConnectReqCsSucc * pmNoRabEstablishSuccessCs64 ) / (
pmTotNoRrcConnectReqCs * pmNoRabEstablishAttemptCs64 )
```

CS64_Call_Completion_Succ_Rate

The call completion success rate per UtranCell for CS 64

Calculation

```
CS64_Accessibility * (1 - CS64_Drop_Rate )  / 100.0
```

CS64_Drop_Rate

The drop rate per UtranCell for CS 64

Calculation

```
100.0 * pmNoSystemRabReleaseCs64 / vsum ( pmNoNormalRabReleaseCs64 ,
pmNoSystemRabReleaseCs64 )
```

CS64_Retainability

The Retainability per UtranCell for CS 64

Calculation

```
100.0 - ( 100.0 * pmNoSystemRabReleaseCs64 / vsum (
pmNoNormalRabReleaseCs64 , pmNoSystemRabReleaseCs64 ) )
```

ebsCountDLChCodeTreeUsage0to24

The number of System Utilization observation events for DL channelization code tree consumption of 0% to 25% during one ROP Period.

Calculation

`ebsCountDLChCodeTreeUsage0to25`

ebsCountDLChCodeTreeUsage25to49

The number of System Utilization observation events for DL channelization code tree consumption of 25% to 50% during one ROP Period.

Calculation

`ebsCountDLChCodeTreeUsage25to50`

ebsCountDLChCodeTreeUsage50to59

The number of System Utilization observation events for DL channelization code tree consumption of 50% to 60% during one ROP Period.

Calculation

`ebsCountDLChCodeTreeUsage50to60`

ebsCountDLChCodeTreeUsage60to69

The number of System Utilization observation events for DL channelization code tree consumption of 60% to 70% during one ROP Period.

Calculation

`ebsCountDLChCodeTreeUsage60to70`

ebsCountDLChCodeTreeUsage70to74

The number of System Utilization observation events for DL channelization code tree consumption of 70% to 75% during one ROP Period.

Calculation

`ebsCountDLChCodeTreeUsage70to75`

ebsCountDLChCodeTreeUsage75to79

The number of System Utilization observation events for DL channelization code tree consumption of 75% to 80% during one ROP Period.

Calculation

`ebsCountDLChCodeTreeUsage75to80`

© Copyright IBM Corp. 2008, 2009. All Rights Reserved.

ebsCountDLChCodeTreeUsage80to84

The number of System Utilization observation events for DL channelization code tree consumption of 80% to 85% during one ROP Period.

Calculation

```
ebsCountDLChCodeTreeUsage80to85
```

ebsCountDLChCodeTreeUsage85to89

The number of System Utilization observation events for DL channelization code tree consumption of 85% to 90% during one ROP Period.

Calculation

```
ebsCountDLChCodeTreeUsage85to90
```

ebsCountDLChCodeTreeUsage90to94

The number of System Utilization observation events for DL channelization code tree consumption of 90% to 95% during one ROP Period.

Calculation

```
ebsCountDLChCodeTreeUsage90to95
```

GRAPHmultiLineSeparator

Special Control Field for Multi-Line Graphs

Calculation

```
""
```

GSM_CELL_CHANGE_IN_FAIL

RRC conn estab fail rate % with estab cause "Inter-RAT cell reselection" or "Inter-RAT cell change order"

Calculation

```
100 - vsum(pmTotNoRrcConnectSuccessIratCcOrder, pmTotNoRrcConnectSuccessIr-
atCellResel) * 100.0 / vsum(pmTotNoRrcConnectAttIratCcOrder, pmTotNoRrcCon-
nectAttIratCellResel)
```

GSM_CELL_CHANGE_OUT_FAIL

Outgoing cell change fail rate % on Packet switched RABs

Calculation

```
100 * AGGR(GsmRelation, pmNoOutIratCcReturnOldCh * 1.0 / pmNoOutIratCcAtt)
```

GSM_HO_IN_FAIL

GSM to UMTS handover failure rate % for CS RAB types

Calculation

```
(pmNoInCsIratHoAtt - pmNoInCsIratHoSuccess) * 100.0 / pmNoInCsIratHoAtt
```

GSM_HO_OUT_FAIL

UMTS to GSM circuit switched handover failure rate %

Calculation

```
AGGR(GsmRelation, GSM_HO_OUT_FAIL)
```

Handover_Reduction_Factor

The Handover Reduction Factor (HRF) for speech is defined as the ratio of downlink code channel utilization for speech and the average number speech users served. This metric shows how much of the radio resources (code and power) are used to support soft handover.

Calculation

```
CS_Speech_Downlink_Code_Utilization / Average_CS_Speech_Users_per_Cell
```

k_CARR_PWR_DL_AVE

Average carrier downlink transmit power (pmTransmittedCarrierPower)

Calculation

```
AGGR(Carrier, k_CARR_PWR_DL_AVE)
```

k_CONG_CSD

Number of Circuit Switched data connections terminated due to congestion

Calculation

```
vsum(pmNoOfTermCsCong, pmNoOfIurTermCsCong)
```

k_CONG_PSD

Number of Packet Switched data users switched down to common channel due to congestion or released if (RNC level) parameter not allowing PS on common channel is set.

Calculation

```
vsum(pmNoOfSwDownNgCong, pmNoOfIurSwDownNgCong)
```

k_CONG_SPEECH

Number of speech radio connections served terminated due to congestion

© Copyright IBM Corp. 2008, 2009. All Rights Reserved.

Calculation

```
vsum(pmNoOfTermSpeechCong, pmNoOfIurTermSpeechCong)
```

k_DL_KB_PER_DROP

Number of transferred kB in downlink per dropped connection (DCH and FACH)

Calculation

```
(vsum(pmDlTrafficVolumeCs12, pmDlTrafficVolumeCs57, pmDlTrafficVolumeCs64,
pmDlTrafficVolumeCs12Ps0, pmDlTrafficVolumeCs12Ps64, pmDlTrafficVolumeP-
sCommon, pmDlTrafficVolumePs64, pmDlTrafficVolumePs128,
pmDlTrafficVolumePs384) / 8) / (pmNoCellDchDisconnectAbnorm + pmNoCellFach-
DisconnectAbnorm)
```

k_RAB_PER_FACH

Average number of RABs per FACH channel.

Calculation

```
pmSumRabFach / pmSamplesRabFach
```

k_RRC_ABNORM_DISCONN

Total number of abnormal disconnections from dedicated and common channels (DCH and FACH states)

Calculation

```
vsum(pmNoCellDchDisconnectAbnorm,pmNoCellFachDisconnectAbnorm)
```

k_RRC_ABNORM_DISCONN_CS64

RRC connection failure rate % for CS64 traffic. (Does not include other CS RABs.)

Calculation

```
100.0 * pmNoCs64DchDiscAbnorm / (pmNoCs64DchDiscNormal +
pmNoCs64DchDiscAbnorm)
```

k_RRC_ABNORM_DISCONN_PS

RRC connection failure rate % for Packet Switched traffic.

Calculation

```
100.0 * pmNoPacketDchDiscAbnorm / (pmNoPacketDchDiscNormal + pmNoPacketDch-
DiscAbnorm)
```

k_RRC_ABNORM_DISCONN_RATE

RRC connection failure rate %

Calculation

```
100.0 * vsum(pmNoCellDchDisconnectAbnorm, pmNoCellFachDisconnectAbnorm) /
vsum(pmNoCellDchDisconnectAbnorm, pmNoCellFachDisconnectAbnorm, pmNoCellD-
chDisconnectNormal, pmNoCellFachDisconnectNormal)
```

k_RRC_ABNORM_DISCONN_SPEECH

RRC connection failure rate % for Speech traffic. (Does not include other CS RABs.)

Calculation

```
100.0 * pmNoSpeechDchDiscAbnorm / (pmNoSpeechDchDiscNormal + pmNoSpeechDch-
DiscAbnorm)
```

k_RRC_ABNORM_DISCONN_STREAM

RRC connection failure rate % for CS57.6 streaming traffic.

Calculation

```
100.0 * pmNoCsStreamDchDiscAbnorm / (pmNoCsStreamDchDiscNormal + pmNoC-
sStreamDchDiscAbnorm)
```

k_RRC_CONN_FAIL

RRC connection failures

Calculation

```
pmTotNoRrcConnectReq - pmTotNoRrcConnectReqSuccess
```

k_RRC_CONN_FAIL_CS

RRC connection failure rate % for Circuit Switched traffic

Calculation

```
(pmTotNoRrcConnectReqCs - pmTotNoRrcConnectReqCsSucc) * 100.0 / pmTotNoRrc-
ConnectReqCs
```

k_RRC_CONN_FAIL_PS

RRC connection failure rate % for Packet Switched traffic

Calculation

```
(pmTotNoRrcConnectReqPs - pmTotNoRrcConnectReqPsSucc) * 100.0 / pmTotNoRrc-
ConnectReqPs
```

k_RRC_CONN_FAIL_RATE

RRC connection failure rate %

© Copyright IBM Corp. 2008, 2009. All Rights Reserved.

Calculation

```
(pmTotNoRrcConnectReq - pmTotNoRrcConnectReqSuccess) * 100.0 / pmTotNoRrc-
ConnectReq
```

k_SHO_AVE_ACT_SET

Average number of radio links in the active set (includes both soft and softer handover)

Calculation

```
vsum(1 * pmSumUesWith1Rls1RlInActSet, 2 * pmSumUesWith1Rls2RlInActSet, 3 *
pmSumUesWith1Rls3RlInActSet, 2 * pmSumUesWith2Rls2RlInActSet, 3 *
pmSumUesWith2Rls3RlInActSet, 4 * pmSumUesWith2Rls4RlInActSet, 3 *
pmSumUesWith3Rls3RlInActSet, 4 * pmSumUesWith3Rls4RlInActSet, 4 *
pmSumUesWith4Rls4RlInActSet) * 1.0 / vsum(pmSumUesWith1Rls1RlInActSet,
pmSumUesWith1Rls2RlInActSet, pmSumUesWith1Rls3RlInActSet,
pmSumUesWith2Rls2RlInActSet, pmSumUesWith2Rls3RlInActSet,
pmSumUesWith2Rls4RlInActSet, pmSumUesWith3Rls3RlInActSet,
pmSumUesWith3Rls4RlInActSet, pmSumUesWith4Rls4RlInActSet)
```

k_SHO_AVE_ACT_SET_P2_1

Average number of radio links in the active set (includes both soft and softer handover)

Calculation

```
vsum(1 * pmSumUesWith1Rls1RlInActSet, 2 * pmSumUesWith1Rls2RlInActSet, 3 *
pmSumUesWith1Rls3RlInActSet, 2 * pmSumUesWith2Rls2RlInActSet, 3 *
pmSumUesWith2Rls3RlInActSet, 4 * pmSumUesWith2Rls4RlInActSet, 3 *
pmSumUesWith3Rls3RlInActSet, 4 * pmSumUesWith3Rls4RlInActSet, 4 *
pmSumUesWith4Rls4RlInActSet) * 1.0 / vsum(pmSumUesWith1Rls1RlInActSet,
pmSumUesWith1Rls2RlInActSet, pmSumUesWith1Rls3RlInActSet,
pmSumUesWith2Rls2RlInActSet, pmSumUesWith2Rls3RlInActSet,
pmSumUesWith2Rls4RlInActSet, pmSumUesWith3Rls3RlInActSet,
pmSumUesWith3Rls4RlInActSet, pmSumUesWith4Rls4RlInActSet)
```

k_SHO_LEG_ADD_FAIL

Fraction of handover leg fails to be added to an active set %

Calculation

```
100.0 * pmNoTimesCellFailAddToActSet / vsum(pmNoTimesRlAddToActSet, pmNo-
TimesRlRepInActSet, pmNoTimesCellFailAddToActSet)
```

k_SHO_RATIO

Ratio of UEs in soft handover %

Calculation

```
vsum(pmSumUesWith1Rls2RlInActSet,
pmSumUesWith1Rls3RlInActSet,pmSumUesWith2Rls2RlInActSet,
pmSumUesWith2Rls3RlInActSet, pmSumUesWith2Rls4RlInActSet,
pmSumUesWith3Rls3RlInActSet, pmSumUesWith3Rls4RlInActSet,
```

```
pmSumUesWith4Rls4RlInActSet) * 100.0 / vsum(pmSumUesWith1Rls1RlInActSet,
pmSumUesWith1Rls2RlInActSet, pmSumUesWith1Rls3RlInActSet,
pmSumUesWith2Rls2RlInActSet, pmSumUesWith2Rls3RlInActSet,
pmSumUesWith2Rls4RlInActSet, pmSumUesWith3Rls3RlInActSet,
pmSumUesWith3Rls4RlInActSet, pmSumUesWith4Rls4RlInActSet)
```

k_SHO_RATIO_P2_1

Ratio of UEs in softer handover % (does not include softer handover)

Calculation

```
vsum(pmSumUesWith2Rls2RlInActSet, pmSumUesWith2Rls3RlInActSet,
pmSumUesWith2Rls4RlInActSet, pmSumUesWith3Rls3RlInActSet,
pmSumUesWith3Rls4RlInActSet, pmSumUesWith4Rls4RlInActSet) * 100.0 /
vsum(pmSumUesWith1Rls1RlInActSet, pmSumUesWith1Rls2RlInActSet,
pmSumUesWith1Rls3RlInActSet, pmSumUesWith2Rls2RlInActSet,
pmSumUesWith2Rls3RlInActSet, pmSumUesWith2Rls4RlInActSet,
pmSumUesWith3Rls3RlInActSet, pmSumUesWith3Rls4RlInActSet,
pmSumUesWith4Rls4RlInActSet)
```

NUMDAYS

of days in Report

Calculation

```
DAYSINREPORT()
```

NUMHOURS

of hours in Summation Data

Calculation

p_ActDlRlcTotPacketThp

Average value of DL RLC throughput measurements, including user data, retransmissions, padding bits, data PDU headers and RLC control PDU

Calculation

```
100.0 * ( pmSumActDlRlcTotPacketThp / pmSamplesActDlRlcTotPacketThp )
```

p_ActDlRlcUserPacketThp

Average value of DL RLC throughput including user data but excluding retransmissions, padding bits, data PDU headers and RLC control PDU

Calculation

```
100.0 * ( pmSumActDlRlcUserPacketThp / pmSamplesActDlRlcUserPacketThp )
```

© Copyright IBM Corp. 2008, 2009. All Rights Reserved.

p_ActUlRlcTotPacketThp

Average value of UL RLC throughput measurements, including user data, retransmissions, padding bits, data PDU headers and RLC control PDU

Calculation

```
100.0 * ( pmSumActUlRlcTotPacketThp / pmSamplesActUlRlcTotPacketThp )
```

p_ActUlRlcUserPacketThp

Average value of UL RLC throughput including user data but excluding retransmissions, padding bits, data PDU headers and RLC control PDU

Calculation

```
100.0 * ( pmSumActUlRlcUserPacketThp / pmSamplesActUlRlcUserPacketThp )
```

PAYLOAD_CS_DL_MB

Payload traffic on downlink in megabyte (MB) for Packet Switched RABs after macro diversity splitting

Calculation

```
vsum(pmDlTrafficVolumeCs12, pmDlTrafficVolumeCs57, pmDlTrafficVolumeCs64,
pmDlTrafficVolumeCs12Ps0) / (8.0 * 1024.0)
```

PAYLOAD_CS_UL_MB

Payload traffic on uplink in megabyte (MB) for Packet Switched RABs before macro diversity combining

Calculation

```
vsum(pmUlTrafficVolumeCs12, pmUlTrafficVolumeCs57, pmUlTrafficVolumeCs64,
pmUlTrafficVolumeCs12Ps0) / (8.0 * 1024.0)
```

PAYLOAD_PS_DL_MB

Payload traffic on downlink in megabyte (MB) for Packet Switched RABs after macro diversity splitting

Calculation

```
vsum(pmDlTrafficVolumeCs12Ps64, pmDlTrafficVolumePsCommon,
pmDlTrafficVolumePs64, pmDlTrafficVolumePs128, pmDlTrafficVolumePs384) /
(8.0 * 1024.0)
```

PAYLOAD_PS_UL_MB

Payload traffic on uplink in megabyte (MB) for all RABs before macro diversity combining

Calculation

```
vsum(pmUlTrafficVolumeCs12Ps64, pmUlTrafficVolumePsCommon,
pmUlTrafficVolumePs64, pmUlTrafficVolumePs128, pmUlTrafficVolumePs384) /
(8.0 * 1024.0)
```

PAYLOAD_TOT_DL_MB

Payload traffic on downlink in megabyte (MB) for all RABs after macro diversity splitting

Calculation

```
vsum(pmDlTrafficVolumeCs12, pmDlTrafficVolumeCs57, pmDlTrafficVolumeCs64,
pmDlTrafficVolumeCs12Ps0, pmDlTrafficVolumeCs12Ps64, pmDlTrafficVolumeP-
sCommon, pmDlTrafficVolumePs64, pmDlTrafficVolumePs128,
pmDlTrafficVolumePs384) / (8.0 * 1024.0)
```

PAYLOAD_TOT_UL_MB

Payload traffic on uplink in megabyte (MB) for all RABs before macro diversity combining

Calculation

```
vsum(pmUlTrafficVolumeCs12, pmUlTrafficVolumeCs57, pmUlTrafficVolumeCs64,
pmUlTrafficVolumeCs12Ps0, pmUlTrafficVolumeCs12Ps64, pmUlTrafficVolumeP-
sCommon, pmUlTrafficVolumePs64, pmUlTrafficVolumePs128,
pmUlTrafficVolumePs384) / (8.0 * 1024.0)
```

pmAverageCompMode

Average number of compressed mode users, reported per cell

Calculation

```
pmSumCompMode * 100.0 / pmSamplesCompMode
```

pmDlRlcUserPacketThpP5MD_00

(Retired on P6)DL RLC throughput (user data), including user data but excluding retransmissions, padding bits, data PDU headers and RLC control PDU's. Measured every polling_time duration. Number of samples in the range 0<= x <5 kbps

Calculation

```
pmDlRlcUserPacketThp_0_5
```

pmDlRlcUserPacketThpP5MD_01

(Retired on P6)DL RLC throughput (user data), including user data but excluding retransmissions, padding bits, data PDU headers and RLC control PDU's. Measured every polling_time duration. Number of samples in the range 5<= x <20 kbps

Calculation

```
pmDlRlcUserPacketThp_5_20
```

© Copyright IBM Corp. 2008, 2009. All Rights Reserved.

pmDlRlcUserPacketThpP5MD_02

(Retired on P6)DL RLC throughput (user data), including user data but excluding retransmissions, padding bits, data PDU headers and RLC control PDU's. Measured every polling_time duration. Number of samples in the range 20<= x <40 kbps

Calculation

```
pmDlRlcUserPacketThp_20_40
```

pmDlRlcUserPacketThpP5MD_03

(Retired on P6)DL RLC throughput (user data), including user data but excluding retransmissions, padding bits, data PDU headers and RLC control PDU's. Measured every polling_time duration. Number of samples in the range 40<= x <60 kbps

Calculation

```
pmDlRlcUserPacketThp_40_60
```

pmDlRlcUserPacketThpP5MD_04

(Retired on P6)DL RLC throughput (user data), including user data but excluding retransmissions, padding bits, data PDU headers and RLC control PDU's. Measured every polling_time duration. Number of samples in the range 60<= x <80 kbps

Calculation

```
pmDlRlcUserPacketThp_60_80
```

pmDlRlcUserPacketThpP5MD_05

(Retired on P6)DL RLC throughput (user data), including user data but excluding retransmissions, padding bits, data PDU headers and RLC control PDU's. Measured every polling_time duration. Number of samples in the range 80<= x <100 kbps

Calculation

```
pmDlRlcUserPacketThp_80_100
```

pmDlRlcUserPacketThpP5MD_06

(Retired on P6)DL RLC throughput (user data), including user data but excluding retransmissions, padding bits, data PDU headers and RLC control PDU's. Measured every polling_time duration. Number of samples in the range 100<= x <120 kbps

Calculation

```
pmDlRlcUserPacketThp_100_120
```

pmDlRlcUserPacketThpP5MD_07

(Retired on P6)DL RLC throughput (user data), including user data but excluding retransmissions, padding bits, data PDU headers and RLC control PDU's. Measured every polling_time duration. Number of samples in the range 120<= x <140kbps

Calculation

```
pmDlRlcUserPacketThp_120_140
```

pmDlRlcUserPacketThpP5MD_08

(Retired on P6)DL RLC throughput (user data), including user data but excluding retransmissions, padding bits, data PDU headers and RLC control PDU's. Measured every polling_time duration. Number of samples in the range 140<= x <160kbps

Calculation

```
pmDlRlcUserPacketThp_140_160
```

pmDlRlcUserPacketThpP5MD_09

(Retired on P6)DL RLC throughput (user data), including user data but excluding retransmissions, padding bits, data PDU headers and RLC control PDU's. Measured every polling_time duration. Number of samples in the range 160<= x <180kbps

Calculation

```
pmDlRlcUserPacketThp_160_180
```

pmDlRlcUserPacketThpP5MD_10

(Retired on P6)DL RLC throughput (user data), including user data but excluding retransmissions, padding bits, data PDU headers and RLC control PDU's. Measured every polling_time duration. Number of samples in the range 180<= x <200kbps

Calculation

```
pmDlRlcUserPacketThp_180_200
```

pmDlRlcUserPacketThpP5MD_11

(Retired on P6)DL RLC throughput (user data), including user data but excluding retransmissions, padding bits, data PDU headers and RLC control PDU's. Measured every polling_time duration. Number of samples in the range 200<= x <220kbps

Calculation

```
pmDlRlcUserPacketThp_200_220
```

© Copyright IBM Corp. 2008, 2009. All Rights Reserved.

pmDlRlcUserPacketThpP5MD_12

(Retired on P6)DL RLC throughput (user data), including user data but excluding retransmissions, padding bits, data PDU headers and RLC control PDU's. Measured every polling_time duration. Number of samples in the range 220<= x <240kbps

Calculation

```
pmDlRlcUserPacketThp_220_240
```

pmDlRlcUserPacketThpP5MD_13

(Retired on P6)DL RLC throughput (user data), including user data but excluding retransmissions, padding bits, data PDU headers and RLC control PDU's. Measured every polling_time duration. Number of samples in the range 240<= x <260kbps

Calculation

```
pmDlRlcUserPacketThp_240_260
```

pmDlRlcUserPacketThpP5MD_14

(Retired on P6)DL RLC throughput (user data), including user data but excluding retransmissions, padding bits, data PDU headers and RLC control PDU's. Measured every polling_time duration. Number of samples in the range 260<= x <280kbps

Calculation

```
pmDlRlcUserPacketThp_260_280
```

pmDlRlcUserPacketThpP5MD_15

(Retired on P6)DL RLC throughput (user data), including user data but excluding retransmissions, padding bits, data PDU headers and RLC control PDU's. Measured every polling_time duration. Number of samples in the range 280<= x <300kbps

Calculation

```
pmDlRlcUserPacketThp_280_300
```

pmDlRlcUserPacketThpP5MD_16

(Retired on P6)DL RLC throughput (user data), including user data but excluding retransmissions, padding bits, data PDU headers and RLC control PDU's. Measured every polling_time duration. Number of samples in the range 300<= x <320kbps

Calculation

```
pmDlRlcUserPacketThp_300_320
```

pmDlRlcUserPacketThpP5MD_17

(Retired on P6)DL RLC throughput (user data), including user data but excluding retransmissions, padding bits, data PDU headers and RLC control PDU's. Measured every polling_time duration. Number of samples in the range 320<= x <340kbps

Calculation

```
pmDlRlcUserPacketThp_320_340
```

pmDlRlcUserPacketThpP5MD_18

(Retired on P6)DL RLC throughput (user data), including user data but excluding retransmissions, padding bits, data PDU headers and RLC control PDU's. Measured every polling_time duration. Number of samples in the range 340<= x <360kbps

Calculation

```
pmDlRlcUserPacketThp_340_360
```

pmDlRlcUserPacketThpP5MD_19

(Retired on P6)DL RLC throughput (user data), including user data but excluding retransmissions, padding bits, data PDU headers and RLC control PDU's. Measured every polling_time duration. Number of samples in the range 360<= x <380kbps

Calculation

```
pmDlRlcUserPacketThp_360_380
```

pmDlRlcUserPacketThpP5MD_20

(Retired on P6)DL RLC throughput (user data), including user data but excluding retransmissions, padding bits, data PDU headers and RLC control PDU's. Measured every polling_time duration. Number of samples in the range 380<= x <400kbps

Calculation

```
pmDlRlcUserPacketThp_380_400
```

pmDlRlcUserPacketThpP5MD_21

(Retired on P6)DL RLC throughput (user data), including user data but excluding retransmissions, padding bits, data PDU headers and RLC control PDU's. Measured every polling_time duration. Number of samples in the range 400<= x <500kbps

Calculation

```
pmDlRlcUserPacketThp_400_500
```

© Copyright IBM Corp. 2008, 2009. All Rights Reserved.

pmDlRlcUserPacketThpP5MD_22

(Retired on P6)DL RLC throughput (user data), including user data but excluding retransmissions, padding bits, data PDU headers and RLC control PDU's. Measured every polling_time duration. Number of samples in the range 500<= x <600kbps

Calculation

```
pmDlRlcUserPacketThp_500_600
```

pmDlRlcUserPacketThpP5MD_23

(Retired on P6)DL RLC throughput (user data), including user data but excluding retransmissions, padding bits, data PDU headers and RLC control PDU's. Measured every polling_time duration. Number of samples in the range 600<= x <700kbps

Calculation

```
pmDlRlcUserPacketThp_600_700
```

pmDlRlcUserPacketThpP5MD_24

(Retired on P6)DL RLC throughput (user data), including user data but excluding retransmissions, padding bits, data PDU headers and RLC control PDU's. Measured every polling_time duration. Number of samples in the range 700<= x <800kbps

Calculation

```
pmDlRlcUserPacketThp_700_800
```

pmDlRlcUserPacketThpP5MD_25

(Retired on P6)DL RLC throughput (user data), including user data but excluding retransmissions, padding bits, data PDU headers and RLC control PDU's. Measured every polling_time duration. Number of samples in the range 800<= x <900kbps

Calculation

```
pmDlRlcUserPacketThp_800_900
```

pmDlRlcUserPacketThpP5MD_26

(Retired on P6)DL RLC throughput (user data), including user data but excluding retransmissions, padding bits, data PDU headers and RLC control PDU's. Measured every polling_time duration. Number of samples in the range 900<= x <1000kbps

Calculation

```
pmDlRlcUserPacketThp_900_1000
```

pmDlRlcUserPacketThpP5MD_27

(Retired on P6)DL RLC throughput (user data), including user data but excluding retransmissions, padding bits, data PDU headers and RLC control PDU's. Measured every polling_time duration. Number of samples in the range 1000<= x <1250kbps

Calculation

```
pmDlRlcUserPacketThp_1000_1250
```

pmDlRlcUserPacketThpP5MD_28

(Retired on P6)DL RLC throughput (user data), including user data but excluding retransmissions, padding bits, data PDU headers and RLC control PDU's. Measured every polling_time duration. Number of samples in the range 1250<= x <1500kbps

Calculation

```
pmDlRlcUserPacketThp_1250_1500
```

pmDlRlcUserPacketThpP5MD_29

(Retired on P6)DL RLC throughput (user data), including user data but excluding retransmissions, padding bits, data PDU headers and RLC control PDU's. Measured every polling_time duration. Number of samples in the range 1500<= x <1750kbps

Calculation

```
pmDlRlcUserPacketThp_1500_1750
```

pmDlRlcUserPacketThpP5MD_30

(Retired on P6)DL RLC throughput (user data), including user data but excluding retransmissions, padding bits, data PDU headers and RLC control PDU's. Measured every polling_time duration. Number of samples in the range 1750<= x <2000kbps

Calculation

```
pmDlRlcUserPacketThp_1750_2000
```

pmDlRlcUserPacketThpP5MD_31

(Retired on P6)DL RLC throughput (user data), including user data but excluding retransmissions, padding bits, data PDU headers and RLC control PDU's. Measured every polling_time duration. Number of samples in the range 2000<= x <2500kbps

Calculation

```
pmDlRlcUserPacketThp_2000_2500
```

© Copyright IBM Corp. 2008, 2009. All Rights Reserved.

pmDlRlcUserPacketThpP5MD_32

(Retired on P6)DL RLC throughput (user data), including user data but excluding retransmissions, padding bits, data PDU headers and RLC control PDU's. Measured every polling_time duration. Number of samples in the range 2500<= x <3000kbps

Calculation

```
pmDlRlcUserPacketThp_2500_3000
```

pmDlRlcUserPacketThpP5MD_33

(Retired on P6)DL RLC throughput (user data), including user data but excluding retransmissions, padding bits, data PDU headers and RLC control PDU's. Measured every polling_time duration. Number of samples in the range 3000<= x <4000kbps

Calculation

```
pmDlRlcUserPacketThp_3000_4000
```

pmDlRlcUserPacketThpP5MD_34

(Retired on P6)DL RLC throughput (user data), including user data but excluding retransmissions, padding bits, data PDU headers and RLC control PDU's. Measured every polling_time duration. Number of samples in the range 4000<= x <5000kbps

Calculation

```
pmDlRlcUserPacketThp_4000_5000
```

pmDlTrafficVolumeCs12_MB

Payload traffic on downlink in megabyte (MB) for conversational/speech 12.2 kbps Circuit Switched RAB after macro diversity splitting

Calculation

```
pmDlTrafficVolumeCs12 / (8.0 * 1024.0)
```

pmDlTrafficVolumeCs12Ps0_MB

Payload traffic on DL in megabyte (MB) for speech 12.2 kbps CS and PS 0/0 kbps multi RAB after macro diversity splitting.

Calculation

```
pmDlTrafficVolumeCs12Ps0 / (8.0 * 1024.0)
```

pmDlTrafficVolumeCs12Ps64_MB

Payload traffic on DL in megabyte (MB) for speech 12.2 kbps CS and PS 64/64 kbps multi RAB after macro diversity splitting.

Calculation

```
pmDlTrafficVolumeCs12Ps64 / (8.0 * 1024.0)
```

pmDlTrafficVolumeCs57_MB

Payload traffic on downlink in megabyte (MB) for streaming 57.6 kbps Circuit Switched RAB after macro diversity splitting.

Calculation

```
pmDlTrafficVolumeCs57 / (8.0 * 1024.0)
```

pmDlTrafficVolumeCs64_MB

Payload traffic on downlink in megabyte (MB) for conversational 64 kbps Circuit Switched RAB after macro diversity splitting

Calculation

```
pmDlTrafficVolumeCs64 / (8.0 * 1024.0)
```

pmDlTrafficVolumePs128_MB

Payload traffic on downlink in megabyte (MB) for Packet Switched 64/128 kbps RAB after macro diversity splitting.

Calculation

```
pmDlTrafficVolumePs128 / (8.0 * 1024.0)
```

pmDlTrafficVolumePs384_MB

Payload traffic on downlink in megabyte (MB) for PS 64/384 RAB after macro diversity splitting.

Calculation

```
pmDlTrafficVolumePs384 / (8.0 * 1024.0)
```

pmDlTrafficVolumePs64_MB

Payload traffic on downlink in megabyte (MB) for Packet Switched 64/64 kbps RAB after macro diversity splitting.

Calculation

```
pmDlTrafficVolumePs64 / (8.0 * 1024.0)
```

pmDlTrafficVolumePsCommon_MB

Payload traffic on DL in megabyte (MB) for PS RAB on FACH/RACH. Retransmissions are also counted as part of the traffic volume.

© Copyright IBM Corp. 2008, 2009. All Rights Reserved.

Calculation

```
pmDlTrafficVolumePsCommon / (8.0 * 1024.0)
```

pmNoInCsIratHoSuccess_GsmRel

Number of successful CS incoming Inter System Handovers for all GsmRelations on this cell

Calculation

```
AGGR(GsmRelation, pmNoInCsIratHoSuccess)
```

pmNoOutIratCcAtt

Total number of the PS Inter-RATCC attempts on DCH

Calculation

```
AGGR(GsmRelation, pmNoOutIratCcAtt)
```

pmNoOutIratCcReturnOldCh

Total number of the PS Inter-RATCC attempts for UE on DCH where the UE returns to old channel

Calculation

```
AGGR(GsmRelation, pmNoOutIratCcReturnOldCh)
```

pmNoOutIratHoAtt

Number of CS Inter RAT Handover attempts to GSM

Calculation

```
AGGR(GsmRelation, pmNoOutIratHoAtt)
```

pmNoOutIratHoResourceAllocFail

Number of CS Inter RAT HO attempts to GSM where the UE returns to old ch due to congestion in GSM or no answer from CN

Calculation

```
AGGR(GsmRelation, pmNoOutIratHoResourceAllocFail)
```

pmNoOutIratHoReturnOldChOther

Number of CS Inter RAT Handover attempts to GSM where the UE returns to old channel due to Unspecified and other

Calculation

```
AGGR(GsmRelation, pmNoOutIratHoReturnOldChOther)
```

pmNoOutIratHoReturnOldChPhyChFail

Number of CS Inter RAT Handover attempts to GSM where the UE returns to old channel due to Physical Channel Failure

Calculation

```
AGGR(GsmRelation, pmNoOutIratHoReturnOldChPhyChFail)
```

pmNoOutIratHoSuccess

Number of successful CS Inter RAT Handovers to GSM

Calculation

```
AGGR(GsmRelation, pmNoOutIratHoSuccess)
```

pmUlRlcUserPacketThpP5MD_00

(Retired on P6)UL RLC throughput (user data), including user data but excluding retransmissions, padding bits, data PDU headers and RLC control PDU's. Measured every polling_time duration. Number of samples in the range 0<= x <5 kbps

Calculation

```
pmUlRlcUserPacketThp_0_5
```

pmUlRlcUserPacketThpP5MD_01

(Retired on P6)UL RLC throughput (user data), including user data but excluding retransmissions, padding bits, data PDU headers and RLC control PDU's. Measured every polling_time duration. Number of samples in the range 5<= x <20 kbps

Calculation

```
pmUlRlcUserPacketThp_5_20
```

pmUlRlcUserPacketThpP5MD_02

(Retired on P6)UL RLC throughput (user data), including user data but excluding retransmissions, padding bits, data PDU headers and RLC control PDU's. Measured every polling_time duration. Number of samples in the range 20<= x <40 kbps

Calculation

```
pmUlRlcUserPacketThp_20_40
```

pmUlRlcUserPacketThpP5MD_03

(Retired on P6)UL RLC throughput (user data), including user data but excluding retransmissions, padding bits, data PDU headers and RLC control PDU's. Measured every polling_time duration. Number of samples in the range 40<= x <60 kbps

© Copyright IBM Corp. 2008, 2009. All Rights Reserved.

Calculation

```
pmUlRlcUserPacketThp_40_60
```

pmUlRlcUserPacketThpP5MD_04

(Retired on P6)UL RLC throughput (user data), including user data but excluding retransmissions, padding bits, data PDU headers and RLC control PDU's. Measured every polling_time duration. Number of samples in the range 60<= x <80 kbps

Calculation

```
pmUlRlcUserPacketThp_60_80
```

pmUlRlcUserPacketThpP5MD_05

(Retired on P6)UL RLC throughput (user data), including user data but excluding retransmissions, padding bits, data PDU headers and RLC control PDU's. Measured every polling_time duration. Number of samples in the range 80<= x <100 kbps

Calculation

```
pmUlRlcUserPacketThp_80_100
```

pmUlRlcUserPacketThpP5MD_06

(Retired on P6)UL RLC throughput (user data), including user data but excluding retransmissions, padding bits, data PDU headers and RLC control PDU's. Measured every polling_time duration. Number of samples in the range 100<= x <120 kbps

Calculation

```
pmUlRlcUserPacketThp_100_120
```

pmUlRlcUserPacketThpP5MD_07

(Retired on P6)UL RLC throughput (user data), including user data but excluding retransmissions, padding bits, data PDU headers and RLC control PDU's. Measured every polling_time duration. Number of samples in the range 120<= x <140kbps

Calculation

```
pmUlRlcUserPacketThp_120_140
```

pmUlRlcUserPacketThpP5MD_08

(Retired on P6)UL RLC throughput (user data), including user data but excluding retransmissions, padding bits, data PDU headers and RLC control PDU's. Measured every polling_time duration. Number of samples in the range 140<= x <160kbps

Calculation

```
pmUlRlcUserPacketThp_140_160
```

pmUlRlcUserPacketThpP5MD_09

(Retired on P6)UL RLC throughput (user data), including user data but excluding retransmissions, padding bits, data PDU headers and RLC control PDU's. Measured every polling_time duration. Number of samples in the range 160<= x <180kbps

Calculation

```
pmUlRlcUserPacketThp_160_180
```

pmUlRlcUserPacketThpP5MD_10

(Retired on P6)UL RLC throughput (user data), including user data but excluding retransmissions, padding bits, data PDU headers and RLC control PDU's. Measured every polling_time duration. Number of samples in the range 180<= x <200kbps

Calculation

```
pmUlRlcUserPacketThp_180_200
```

pmUlRlcUserPacketThpP5MD_11

(Retired on P6)UL RLC throughput (user data), including user data but excluding retransmissions, padding bits, data PDU headers and RLC control PDU's. Measured every polling_time duration. Number of samples in the range 200<= x <220kbps

Calculation

```
pmUlRlcUserPacketThp_200_220
```

pmUlRlcUserPacketThpP5MD_12

(Retired on P6)UL RLC throughput (user data), including user data but excluding retransmissions, padding bits, data PDU headers and RLC control PDU's. Measured every polling_time duration. Number of samples in the range 220<= x <240kbps

Calculation

```
pmUlRlcUserPacketThp_220_240
```

pmUlRlcUserPacketThpP5MD_13

(Retired on P6)UL RLC throughput (user data), including user data but excluding retransmissions, padding bits, data PDU headers and RLC control PDU's. Measured every polling_time duration. Number of samples in the range 240<= x <260kbps

Calculation

```
pmUlRlcUserPacketThp_240_260
```

© Copyright IBM Corp. 2008, 2009. All Rights Reserved.

pmUlRlcUserPacketThpP5MD_14

(Retired on P6)UL RLC throughput (user data), including user data but excluding retransmissions, padding bits, data PDU headers and RLC control PDU's. Measured every polling_time duration. Number of samples in the range 260<= x <280kbps

Calculation

```
pmUlRlcUserPacketThp_260_280
```

pmUlRlcUserPacketThpP5MD_15

(Retired on P6)UL RLC throughput (user data), including user data but excluding retransmissions, padding bits, data PDU headers and RLC control PDU's. Measured every polling_time duration. Number of samples in the range 280<= x <300kbps

Calculation

```
pmUlRlcUserPacketThp_280_300
```

pmUlRlcUserPacketThpP5MD_16

(Retired on P6)UL RLC throughput (user data), including user data but excluding retransmissions, padding bits, data PDU headers and RLC control PDU's. Measured every polling_time duration. Number of samples in the range 300<= x <320kbps

Calculation

```
pmUlRlcUserPacketThp_300_320
```

pmUlRlcUserPacketThpP5MD_17

(Retired on P6)UL RLC throughput (user data), including user data but excluding retransmissions, padding bits, data PDU headers and RLC control PDU's. Measured every polling_time duration. Number of samples in the range 320<= x <340kbps

Calculation

```
pmUlRlcUserPacketThp_320_340
```

pmUlRlcUserPacketThpP5MD_18

(Retired on P6)UL RLC throughput (user data), including user data but excluding retransmissions, padding bits, data PDU headers and RLC control PDU's. Measured every polling_time duration. Number of samples in the range 340<= x <360kbps

Calculation

```
pmUlRlcUserPacketThp_340_360
```

pmUlTrafficVolumeCs12_MB

Payload traffic on uplink in megabyte (MB) for conversational/speech 12.2 kbps Circuit Switched RAB before macro diversity combining

Calculation

```
pmUlTrafficVolumeCs12 / (8.0 * 1024.0)
```

pmUlTrafficVolumeCs12Ps0_MB

Payload traffic on UL in megabyte (MB) for speech 12.2 kbps CS and PS 0/0 kbps multi RAB before macro diversity combining.

Calculation

```
pmUlTrafficVolumeCs12Ps0 / (8.0 * 1024.0)
```

pmUlTrafficVolumeCs12Ps64_MB

Payload traffic on UL in megabyte (MB) for speech 12.2 kbps CS and PS 64/64 kbps multi RAB before macro diversity combining.

Calculation

```
pmUlTrafficVolumeCs12Ps64 / (8.0 * 1024.0)
```

pmUlTrafficVolumeCs57_MB

Payload traffic on uplink in megabyte (MB) for streaming 57.6 kbps Circuit Switched RAB before macro diversity combining.

Calculation

```
pmUlTrafficVolumeCs57 / (8.0 * 1024.0)
```

pmUlTrafficVolumeCs64_MB

Payload traffic on uplink in megabyte (MB) for conversational 64 kbps Circuit Switched RAB before macro diversity combining.

Calculation

```
pmUlTrafficVolumeCs64 / (8.0 * 1024.0)
```

pmUlTrafficVolumePs128_MB

Payload traffic on uplink in megabyte (MB) for Packet Switched 64/128 kbps RAB before macro diversity combining

Calculation

```
pmUlTrafficVolumePs128 / (8.0 * 1024.0)
```

pmUlTrafficVolumePs384_MB

Payload traffic on uplink in megabyte (MB) for Packet Switched 64/384 kbps RAB before macro diversity combining.

© Copyright IBM Corp. 2008, 2009. All Rights Reserved.

Calculation

```
pmUlTrafficVolumePs384 / (8.0 * 1024.0)
```

pmUlTrafficVolumePs64_MB

Payload traffic on uplink in megabyte (MB) for Packet Switched 64/64 kbps RAB before macro diversity combining

Calculation

```
pmUlTrafficVolumePs64 / (8.0 * 1024.0)
```

pmUlTrafficVolumePsCommon_MB

Payload traffic on UL in megabyte (MB) for PS RAB on FACH/RACH. Retransmissions are also counted as part of the traffic volume.

Calculation

```
pmUlTrafficVolumePsCommon / (8.0 * 1024.0)
```

PS_interact_Accessibility_Grade_of_Service

The blocking rate for PS interactive calls per UtranCell due to admission based on downlink power, downlink channelization code, downlink Average Speech Equivalent (ASE)

Calculation

```
100.0 * pmNoOfNonHoReqDeniedInteractive / pmNoRabEstablishAttemptPacketInt-
eractive
```

PS_interactive_Call_Completion_Rate

The call completion success rate per UtranCell for PS Interactive

Calculation

```
PS_Intreract_Accessibility * ( 1 - PS_interactive_Drop_Rate )  / 100.0
```

PS_interactive_Drop_Rate

The drop rate per UtranCell for PS Interactive

Calculation

```
( 100.0 - PS_Intreract_Accessibility ) * ( pmNoSystemRabReleasePacket -
pmNoTpSwitchSp64Speech - pmChSwitchFachIdle ) /  vsum ( pmNoNormalRabRe-
leasePacket , pmNoSystemRabReleasePacket )
```

PS_interactive_Retainability

The Retainability per UtranCell for PS Interactive

Calculation

```
PS_Intreract_Accessibility * ( pmNoSystemRabReleasePacket -
pmNoTpSwitchSp64Speech - pmChSwitchFachIdle ) /  vsum ( pmNoNormalRabRe-
leasePacket , pmNoSystemRabReleasePacket )
```

PS_Intreract_Accessibility

Accessibility success rate per UtranCell for PS interactive

Calculation

```
100.0 * ( pmTotNoRrcConnectReqPsSucc * pmNoRabEstablishSuccessPacketInter-
active ) / ( pmTotNoRrcConnectReqPs * pmNoRabEstablishSuccessPacketInterac-
tive)
```

PS_Stream_Accessibility

Accessibility success rate per UtranCell for PS streaming

Calculation

```
100.0 * ( pmTotNoRrcConnectReqPsSucc * pmNoRabEstablishSuccessPacketStream
) / (  pmTotNoRrcConnectReqPs * pmNoRabEstablishAttemptPacketStream )
```

PS_Stream_Call_Completion_Success_Rate

The call completion success rate per UtranCell for PS Streaming

Calculation

```
PS_Stream_Accessibility * ( 1 - PS_Stream_Drop_Rate ) / 100.0
```

PS_Stream_Drop_Rate

The drop rate per UtranCell for PS Streaming

Calculation

```
100.0 * pmNoSystemRabReleasePacketStream / vsum ( pmNoNormalRabReleasePack-
etStream , pmNoSystemRabReleasePacketStream )
```

PS_Stream_Retainability

The Retainability per UtranCell for PS Streaming

Calculation

```
100.0 - ( 100.0 * pmNoSystemRabReleasePacketStream / vsum ( pmNoNormalRa-
bReleasePacketStream , pmNoSystemRabReleasePacketStream ) )
```

PS_Streaming_Accessibility_Grade_of_Service

The blocking rate for PS Streaming calls per UtranCell due to admission based on downlink power, downlink channelization code, downlink Average Speech Equivalent (ASE)

© Copyright IBM Corp. 2008, 2009. All Rights Reserved.

Calculation

```
100.0 * pmNoOfNonHoReqDeniedPsStreaming / pmNoRabEstablishAttemptPacket-
Stream
```

RefReqAllFRate

Average percentage of admitted requests with priority F4 & F3 & F3 & F2 & F1 & F0 (Foreground) rejections

Calculation

```
vsum ( pmRefusedRequestsF0 ,pmRefusedRequestsF1, pmRefusedRequestsF2,
pmRefusedRequestsF3, pmRefusedRequestsF4 ) * 100.0 / vsum (
pmAdmittedRequestsF0, pmAdmittedRequestsF1, pmAdmittedRequestsF2,
pmAdmittedRequestsF3, pmAdmittedRequestsF4 )
```

ReturningRrcConnRate

percentage of failure for load sharing when establishing an RRC connection

Calculation

```
pmNoOfReturningRrcConn * 100.0 / pmNoLoadSharingRrcConn
```

UtranCell Peg Counts

The following is a list of peg counts for the UtranCell entity.

accessClassNBarred

Indicates whether or not access class N is barred (N = 0 to 15). { long, Range = 0..65535, Default=0 }

Data Source

Bulk CM

Source Section

UtranCell

ActDlRlcTotPacketThp_Preloaded

Indication of Average value of DL RLC throughput. Preloaded calculation of (pmSumActDlRlcTotPacketThp / pmSamplesActDlRlcTotPacketThp)

Data Source

RNC

Source Section

UtranCell

ActDlRlcUserPacketThp_Preloaded

Indication of Average DL RLC User Precieved Throughout. Preloaded calculation of (pmSumActDlRlcUserPacketThp / pmSamplesActDlRlcUserPacketThp)

Data Source

RNC

Source Section

UtranCell

ActUlRlcTotPacketThp_Preloaded

Indication of Average value of UL RLC throughput. Preloaded calculation of (pmSumActUlRlcTotPacketThp / pmSamplesActUlRlcTotPacketThp)

Data Source

RNC

Source Section

UtranCell

ActUlRlcUserPacketThp_Preloaded

Indication of Average UL RLC User Precieved Throughout. Preloaded calculation of (pmSumActUlRlcUserPacketThp / pmSamplesActUlRlcUserPacketThp)

Data Source

RNC

Source Section

UtranCell

administrativeState

The administrative state of the channel. { string, Default= UNLOCKED }

Data Source

Bulk CM

© Copyright IBM Corp. 2008, 2009. All Rights Reserved.

Source Section

Fach

administrativeState_CM

The administrative state of the cell. { string, Default= LOCKED }

Data Source

Bulk CM

Source Section

UtranCell

administrativeState_CM_HSDPA

The administrative state of the HSDPA resources in the cell. { string, Default= LOCKED }

Data Source

Bulk CM

Source Section

Hsdsch

administrativeState_CM_PCH

The administrative state of the channel. { string, Default= UNLOCKED }

Data Source

Bulk CM

Source Section

Pch

aseDlAdm

Admission limit for admission on max capacity (ASE level) in DL. { long, Range = 0..500, Default=240 }

Data Source

Bulk CM

Source Section

UtranCell

aseUlAdm

Admission limit for admission on ASE in UL. { long, Range = 0..500, Default=160 }

Data Source

Bulk CM

Source Section

UtranCell

aseUlAdmOffset

Relative admission limit for admission on ASE in UL. { long, Range = 0..500, Default=40 }

Data Source

Bulk CM

Source Section

UtranCell

availabilityStatus

The availability status of the FACH channel. { long, Range = 0..2047, Default=0, ReadOnly, NonPersistent, }

Data Source

Bulk CM

Source Section

Fach

availabilityStatus_CM

The availability status of the cell. { long, Range = 0..2047, Default=0, ReadOnly, NonPersistent, }

Data Source

Bulk CM

© Copyright IBM Corp. 2008, 2009. All Rights Reserved.

Source Section

UtranCell

availabilityStatus_CM_HSDPA

The availability status of the HSDPA resources in the cell. { long, Range = 0..2047, Default=0, ReadOnly, NonPersistent, }

Data Source

Bulk CM

Source Section

Hsdsch

availabilityStatus_CM_PCH

The availability status of the Packet Data Router device. { long, Range = 0..2047, Default=0, ReadOnly, NonPersistent, }

Data Source

Bulk CM

Source Section

Pch

bchPower

BCH power is the power to be used for transmitting on the BCH, relative to the primaryCpichPower value.(Ref. 3GPP TS 25.433). { long, Range = -350..150, Default=-31 }

Data Source

Bulk CM

Source Field

un:bchPower

Source Section

UtranCell

beMarginAseDl

Relative admission limit for admission on ASE for non-guaranteed bitrate calls (traffic class 'background' or 'interactive') in DL. { long, Range = 0..500, Default=100 }

Data Source

Bulk CM

Source Section

UtranCell

beMarginAseUl

Relative admission limit for admission on ASE for non-guaranteed bitrate calls (traffic class 'background' or 'interactive') in UL. { long, Range = 0..500, Default=20 }

Data Source

Bulk CM

Source Section

UtranCell

beMarginDlCode

Admission margin for DL code utilization in DL (non-handover, non-compressed mode RLs only). { long, Range = 0..20, Default=2 }

Data Source

Bulk CM

Source Section

UtranCell

beMarginDlPwr

Admission margin for DL power usage (non-guaranteed requests) { long, Range = 0..100, Default=10 }

Data Source

Bulk CM

Source Section

UtranCell

cellReserved

Indicates if this cell shall be reserved for operator use. If it is reserved, there will be no service to the UEs. { string, Default= NOT_RESERVED }

© Copyright IBM Corp. 2008, 2009. All Rights Reserved.

Data Source

Bulk CM

Source Section

UtranCell

cId

Cell identity. Unique in the RNC. cId is the identifier of a cell in one RNC, and is used together with the RncFunction attribute rncId as cell id at system information broadcast. { long, Range = 0..65535, Default=Mandatory }

Data Source

Bulk CM

Source Field

un:cId

Source Section

UtranCell

compModeAdm

Admission limit for #RL in compressed mode in a cell. { long, Range = 0..128, Default=15 }

Data Source

Bulk CM

Source Section

UtranCell

congDlInterval

System constant. { long, Default=100 }

Data Source

Bulk CM

Source Section

UtranCell

congTimeOut

System constant. { long, Default=3000 }

Data Source

Bulk CM

Source Section

UtranCell

congUlInterval

System constant. { long, Default=100 }

Data Source

Bulk CM

Source Section

UtranCell

coverageIndicator

Defines whether the coverage area of the source cell and the target cell are indicated to overlap approximately the same coverage area, or whether the coverage area of the target cell is indicated to cover the source cell or it is contained in the source { string, Default=OVERLAP }

Data Source

Bulk CM

Source Section

CoverageRelation

cqiFeedbackCycle

The duration of the CQI feedback cycle on HS-DPCCH. { long, Range = 0,2,4,8,10,20,40,80,160, Default=8 }

Data Source

Bulk CM

Source Section

Hsdsch

© Copyright IBM Corp. 2008, 2009. All Rights Reserved.

CS_Speech_Usage_AA

Stored pCalc for CS_Speech_Erlang (Avg/Avg). The average speech traffic Erlang carried per UtranCell . This is best fitted with Erlang definition through hourly report which is the same as 4 consecutive 15 minutes periods.

Data Source

NodeB_RNC_RXI

Source Field

protect(vsum(pmSumBestCs12Establish / pmSamplesBestCs12Establish, pmSumBestAmrWbRabEstablish / pmSamplesBestAmrWbRabEstablish, pmSumBestAmr7950RabEstablish / pmSamplesBestAmr7950RabEstablish, pmSumBestAmr5900RabEstablish / pmSamplesBestAmr5900RabEstablish, pmSumBestAmr4750RabEstablish / pmSamplesBestAmr4750RabEstablish, pmSumBestAmr12200RabEstablish / pmSamplesBestAmr12200RabEstablish))

Source Section

UtranCell

CS_Speech_Usage_AS

Stored pCalc for CS_Speech_Erlang (Avg/Sum). The average speech traffic Erlang carried per UtranCell . This is best fitted with Erlang definition through hourly report which is the same as 4 consecutive 15 minutes periods.

Data Source

NodeB_RNC_RXI

Source Field

protect(vsum(pmSumBestCs12Establish / pmSamplesBestCs12Establish, pmSumBestAmrWbRabEstablish / pmSamplesBestAmrWbRabEstablish, pmSumBestAmr7950RabEstablish / pmSamplesBestAmr7950RabEstablish, pmSumBestAmr5900RabEstablish / pmSamplesBestAmr5900RabEstablish, pmSumBestAmr4750RabEstablish / pmSamplesBestAmr4750RabEstablish, pmSumBestAmr12200RabEstablish / pmSamplesBestAmr12200RabEstablish))

Source Section

UtranCell

CS_Speech_Usage_SS

Stored pCalc for CS_Speech_Erlang (Sum/Sum). The average speech traffic Erlang carried per UtranCell . This is best fitted with Erlang definition through hourly report which is the same as 4 consecutive 15 minutes periods.

Data Source

NodeB_RNC_RXI

Source Field

protect(vsum(pmSumBestCs12Establish / pmSamplesBestCs12Establish, pmSumBestAmrWbRabEstablish / pmSamplesBestAmrWbRabEstablish, pmSumBestAmr7950RabEstablish / pmSamplesBestAmr7950RabEstablish, pmSumBestAmr5900RabEstablish / pmSamplesBestAmr5900RabEstablish, pmSumBestAmr4750RabEstablish / pmSamplesBestAmr4750RabEstablish, pmSumBestAmr12200RabEstablish / pmSamplesBestAmr12200RabEstablish))

Source Section

UtranCell

deltaAck1

The power offset for acknowledgement messages on HS-DPCCH for UE Connections using one RLS. { long, Range = 0..8, Default=4 }

Data Source

Bulk CM

Source Section

Hsdsch

deltaAck2

The power offset for acknowledgement messages on HS-DPCCH for UE Connections using two or more RLSs. { long, Range = 0..8, Default=8 }

Data Source

Bulk CM

Source Section

Hsdsch

© Copyright IBM Corp. 2008, 2009. All Rights Reserved.

deltaCqi1

The power offset for CQI report messages on HS-DPCCH for UE Connections using one RLS. { long, Range = 0..8, Default=4 }

Data Source

Bulk CM

Source Section

Hsdsch

deltaCqi2

The power offset for CQI report messages on HS-DPCCH for UE Connections using two or more RLSs. { long, Range = 0..8, Default=8 }

Data Source

Bulk CM

Source Section

Hsdsch

deltaNack1

The power offset for non-acknowledgement messages on HS-DPCCH for UE Connections using one RLS. { long, Range = 0..8, Default=4 }

Data Source

Bulk CM

Source Section

Hsdsch

deltaNack2

The power offset for non-acknowledgement messages on HS-DPCCH for UE Connections using two or more RLSs. { long, Range = 0..8, Default=8 }

Data Source

Bulk CM

Source Section

Hsdsch

deviceIndId

Device individual identity. { string, Default= "", ReadOnly, NoNotification}

Data Source

Bulk CM

Source Section

Pch

directedRetryTarget

Reference to the ExternalGsmCell MO, containing the specification of this Load Sharing via Directed Retry target cell. { ExternalGsmCell, Default= empty }

Data Source

Bulk CM

Source Section

UtranCell

dlCodeAdm

Admission limit used for admission based on DL channelization code tree usage (percentage of the tree in use). { long, Range = 0..100, Default=70 }

Data Source

Bulk CM

Source Section

UtranCell

ebsCountDLChCodeTreeUsage

The number of System Utilization observation events with a valid DL channelization code tree consumption parameter during one ROP Period. The scanning interval is 2 seconds. Reset at each ROP period.

Data Source

P6 EBS-W

Source Field

ebsCountDLChCodeTreeUsage

© Copyright IBM Corp. 2008, 2009. All Rights Reserved.

Source Section

UtranCell

ebsCountDLChCodeTreeUsage0to25

The number of System Utilization observation events for DL channelization code tree consumption of 0% to 25% during one ROP Period.

Data Source

P6 EBS-W

Source Field

ebsCountDLChCodeTreeUsage0to25

Source Section

UtranCell

ebsCountDLChCodeTreeUsage25to50

The number of System Utilization observation events for DL channelization code tree consumption of 25% to 50% during one ROP Period.

Data Source

P6 EBS-W

Source Field

ebsCountDLChCodeTreeUsage25to50

Source Section

UtranCell

ebsCountDLChCodeTreeUsage50to60

The number of System Utilization observation events for DL channelization code tree consumption of 50% to 60% during one ROP Period.

Data Source

P6 EBS-W

Source Field

ebsCountDLChCodeTreeUsage50to60

Source Section

UtranCell

ebsCountDLChCodeTreeUsage60to70

The number of System Utilization observation events for DL channelization code tree consumption of 60% to 70% during one ROP Period.

Data Source

P6 EBS-W

Source Field

ebsCountDLChCodeTreeUsage60to70

Source Section

UtranCell

ebsCountDLChCodeTreeUsage70to75

The number of System Utilization observation events for DL channelization code tree consumption of 70% to 75% during one ROP Period.

Data Source

P6 EBS-W

Source Field

ebsCountDLChCodeTreeUsage70to75

Source Section

UtranCell

ebsCountDLChCodeTreeUsage75to80

The number of System Utilization observation events for DL channelization code tree consumption of 75% to 80% during one ROP Period.

Data Source

P6 EBS-W

Source Field

ebsCountDLChCodeTreeUsage75to80

© Copyright IBM Corp. 2008, 2009. All Rights Reserved.

Source Section

UtranCell

ebsCountDLChCodeTreeUsage80to85

The number of System Utilization observation events for DL channelization code tree consumption of 80% to 85% during one ROP Period.

Data Source

P6 EBS-W

Source Field

ebsCountDLChCodeTreeUsage80to85

Source Section

UtranCell

ebsCountDLChCodeTreeUsage85to90

The number of System Utilization observation events for DL channelization code tree consumption of 85% to 90% during one ROP Period.

Data Source

P6 EBS-W

Source Field

ebsCountDLChCodeTreeUsage85to90

Source Section

UtranCell

ebsCountDLChCodeTreeUsage90to95

The number of System Utilization observation events for DL channelization code tree consumption of 90% to 95% during one ROP Period.

Data Source

P6 EBS-W

Source Field

ebsCountDLChCodeTreeUsage90to95

Source Section

UtranCell

ebsCountDLChCodeTreeUsage95to100

The number of System Utilization observation events for DL channelization code tree consumption of 95% to 100% during one ROP Period.

Data Source

P6 EBS-W

Source Field

ebsCountDLChCodeTreeUsage95to100

Source Section

UtranCell

ebsCountDLMaxPower

The number of System Utilization observation events with a valid Maximum DL power event parameter during one ROP Period. The scanning interval is 2 seconds. Reset at each ROP Period

Data Source

P6 EBS-W

Source Field

ebsCountDLMaxPower

Source Section

UtranCell

ebsCountDLTotalASE

The number of System Utilization observation events with a valid number of total ASE DL event parameter during one ROP Period. The scanning interval is 2 seconds. Reset at each ROP Period.

Data Source

P6 EBS-W

© Copyright IBM Corp. 2008, 2009. All Rights Reserved.

Source Field

ebsCountDLTotalASE

Source Section

UtranCell

ebsCountHSDCHReqPower

The number of System Utilization observation events with a valid HS-DSCH required power event parameter during one ROP Period. The scanning interval is 2 seconds. Reset at each ROP Period.

Data Source

P6 EBS-W

Source Field

ebsCountHSDCHReqPower

Source Section

UtranCell

ebsCountNoDLComModeUsers

The number of System Utilization observation events with a valid number of compressed mode users event parameter during one ROP Period. The scanning interval is 2 seconds. Reset at each ROP Period.

Data Source

P6 EBS-W

Source Field

ebsCountNoDLComModeUsers

Source Section

UtranCell

ebsCountNoDLConSF16

The number of System Utilization observation events with a valid number of DL connections for SF 16 event parameter during one ROP Period. The scanning interval is 2 seconds. Reset at each ROP Period.

Data Source

P6 EBS-W

Source Field

ebsCountNoDLConSF16

Source Section

UtranCell

ebsCountNoDLConSF32

The number of System Utilization observation events with a valid number of DL connections for SF 32 event parameter during one ROP Period. The scanning interval is 2 seconds. Reset at each ROP Period.

Data Source

P6 EBS-W

Source Field

ebsCountNoDLConSF32

Source Section

UtranCell

ebsCountNoDLConSF8

The number of System Utilization observation events with a valid number of DL connections for SF 8 event parameter during one ROP Period. The scanning interval is 2 seconds. Reset at each ROP Period.

Data Source

P6 EBS-W

Source Field

ebsCountNoDLConSF8

Source Section

UtranCell

© Copyright IBM Corp. 2008, 2009. All Rights Reserved.

ebsCountNoEDCHUsersNonServCell

The number of System Utilization observation events with a valid number of E-DCH users in the non-serving cell event parameter during one ROP Period. The scanning interval is 2 seconds. Reset at each ROP Period.

Data Source

P6 EBS-W

Source Field

ebsCountNoEDCHUsersNonServCell

Source Section

UtranCell

ebsCountNoEDCHUsersServCell

The number of System Utilization observation events with a valid number of E-DCH users in the serving cell event parameter during one ROP Period. The scanning interval is 2 seconds. Reset at each ROP Period.

Data Source

P6 EBS-W

Source Field

ebsCountNoEDCHUsersServCell

Source Section

UtranCell

ebsCountNoRLUsingSF16

The number of System Utilization observation events with a valid number of radio links with UL SF = 16 event parameter during one ROP Period. The scanning interval is 2 seconds. Reset at each ROP Period.

Data Source

P6 EBS-W

Source Field

ebsCountNoRLUsingSF16

Source Section

UtranCell

ebsCountNoRLUsingSF4

The number of System Utilization observation events with a valid number of radio links with UL SF = 4 event parameter during one ROP Period. The scanning interval is 2 seconds. Reset at each ROP Period.

Data Source

P6 EBS-W

Source Field

ebsCountNoRLUsingSF4

Source Section

UtranCell

ebsCountNoRLUsingSF8

The number of System Utilization observation events with a valid number of radio links with UL SF = 8 event parameter during one ROP Period. The scanning interval is 2 seconds. Reset at each ROP Period.

Data Source

P6 EBS-W

Source Field

ebsCountNoRLUsingSF8

Source Section

UtranCell

ebsCountNoUsersAssignedPhyHSDPAChannels

The number of System Utilization observation events with a valid number of users assigned to the physical HSDPA channels event parameter during one ROP Period. The scanning interval is 2 seconds. Reset at each ROP Period.

Data Source

P6 EBS-W

© Copyright IBM Corp. 2008, 2009. All Rights Reserved.

Source Field

ebsCountNoUsersAssignedPhyHSDPAChannels

Source Section

UtranCell

ebsCountTransCarrierPower

The number of System Utilization observation events with a valid number of Transmitted carrier power event parameter during one ROP Period. The scanning interval is 2 seconds. Reset at each ROP Period.

Data Source

P6 EBS-W

Source Field

ebsCountTransCarrierPower

Source Section

UtranCell

ebsCountTransCarrierPowerNonHS

The number of System Utilization observation events with a valid number of Transmitted carrier power of all codes not used for HS-PDSCH or HS-SCCH transmission event parameter during one ROP Period. The scanning interval is 2 seconds. Reset at each ROP period.

Data Source

P6 EBS-W

Source Field

ebsCountTransCarrierPowerNonHS

Source Section

UtranCell

ebsCountULInterference

The number of System Utilization observation events with a valid number of UL interference event parameter during one ROP Period. The scanning interval is 2 seconds. Reset at each ROP Period.

Data Source

P6 EBS-W

Source Field

ebsCountULInterference

Source Section

UtranCell

ebsCountULTotalASE

The number of System Utilization observation events with a valid number of total ASE UL event parameter during one ROP Period. The scanning interval is 2 seconds. Reset at each ROP Period.

Data Source

P6 EBS-W

Source Field

ebsCountULTotalASE

Source Section

UtranCell

ebsDLChCodeTreeUsage_Average

Average the % values of the total downlink channelization code tree usage measurements at the time of event generation during one ROP period.

Data Source

P6 EBS-W

ebsDLMaxPower_Average

Average the dBm values of the maximum DL power measurements (.1 dBm resolution) at the time of event generation during one ROP period.

Data Source

P6 EBS-W

© Copyright IBM Corp. 2008, 2009. All Rights Reserved.

ebsDLTotalASE_Average

Average of the Total Air Interface Speech Equivalents (ASEs) downlink at the time of event generation during one ROP period.

Data Source

P6 EBS-W

ebsHSDSCHReqPower_Average

Average the % values of the transmitted carrier power (HS-DSCH Required Power, .1 % resolution) of all codes not used for HS-PDSCH or HS-SCCH transmission measurements at the time of event generation during one ROP period.

Data Source

P6 EBS-W

ebsNoDLComModeUsers_Average

Average of the number of DL compressed mode users at the time of event generation during one ROP period.

Data Source

P6 EBS-W

ebsNoDLConSF16_Average

Average of the total number of downlink connections for spreading factor 16 at the time of event generation during one ROP period.

Data Source

P6 EBS-W

ebsNoDLConSF32_Average

Average of the total number of downlink connections for spreading factor 32 at the time of event generation during one ROP period.

Data Source

P6 EBS-W

ebsNoDLConSF8_Average

Average of the total number of downlink connections for spreading factor 8 at the time of event generation during one ROP period.

Data Source

P6 EBS-W

ebsNoEDCHUsersNonServCell_Average

Average of the number of E-DCH users in a non-serving cell at the time of event generation during one ROP period.

Data Source

P6 EBS-W

ebsNoEDCHUsersServCell_Average

Average the total number of E-DCH users in the serving cell at the time of event generation during one ROP period.

Data Source

P6 EBS-W

ebsNoRLUsingSF16_Average

Average of the total number of admitted radio links using uplink spreading factor 16 at the time of event generation during one ROP period.

Data Source

P6 EBS-W

ebsNoRLUsingSF4_Average

Average of the total number of admitted radio links using uplink spreading factor 4 at the time of event generation during one ROP period.

Data Source

P6 EBS-W

ebsNoRLUsingSF8_Average

Average of the total number of admitted radio links using uplink spreading factor 8 at the time of event generation during one ROP period.

Data Source

P6 EBS-W

© Copyright IBM Corp. 2008, 2009. All Rights Reserved.

ebsNoUsersAssignedPhyHSDPACh_Average

Average on the total number of users assigned to the physical HSDPA channels at the time of event generation during one ROP period.

Data Source

P6 EBS-W

ebsPeakDLChCodeTreeUsage

Peak of the total downlink channelization code tree usage measurements at the time of event generation during one ROP period.

Data Source

P6 EBS-W

Source Field

ebsPeakDLChCodeTreeUsage

Source Section

UtranCell

ebsPeakDLMaxPower

Peak of the maximum DL power measurements (.1 dBm resolution) at the time of event generation during one ROP period.

Data Source

P6 EBS-W

Source Field

ebsPeakDLMaxPower

Source Section

UtranCell

ebsPeakDLTotalASE

Peak of the Total Air interface Speech Equivalents (ASEs) downlink at the time of event generation during one ROP period.

Data Source

P6 EBS-W

Source Field

ebsPeakDLTotalASE

Source Section

UtranCell

ebsPeakHSDSCHReqPower

Peak of the total transmitted carrier power (HS-DSCH Required Power, .1% resolution) of all codes not used for HS-PDSCH or HS-SCCH transmission measurements at the time of event generation during one ROP period.

Data Source

P6 EBS-W

Source Field

ebsPeakHSDSCHReqPower

Source Section

UtranCell

ebsPeakNoDLComModeUsers

Peak of the number of DL compressed mode users at the time of event generation during one ROP period.

Data Source

P6 EBS-W

Source Field

ebsPeakNoDLComModeUsers

Source Section

UtranCell

ebsPeakNoDLConSF16

Peak of the number of downlink connections for spreading factor 16 at the time of event generation during one ROP period.

Data Source

P6 EBS-W

© Copyright IBM Corp. 2008, 2009. All Rights Reserved.

Source Field

ebsPeakNoDLConSF16

Source Section

UtranCell

ebsPeakNoDLConSF32

Peak of the number of downlink connections for spreading factor 32 at the time of event generation during one ROP period.

Data Source

P6 EBS-W

Source Field

ebsPeakNoDLConSF32

Source Section

UtranCell

ebsPeakNoDLConSF8

Peak of the number of downlink connections for spreading factor 8 at the time of event generation during one ROP period.

Data Source

P6 EBS-W

Source Field

ebsPeakNoDLConSF8

Source Section

UtranCell

ebsPeakNoEDCHUsersNonServCell

Peak of the number of E-DCH users in a non-serving cell at the time of event generation during one ROP period.

Data Source

P6 EBS-W

Source Field

ebsPeakNoEDCHUsersNonServCell

Source Section

UtranCell

ebsPeakNoEDCHUsersServCell

Peak of the number of E-DCH users in the serving cell during at the time of event generation during one ROP period.

Data Source

P6 EBS-W

Source Field

ebsPeakNoEDCHUsersServCell

Source Section

UtranCell

ebsPeakNoRLUsingSF16

Peak of the number of admitted radio links using uplink spreading factor 16 at the time of event generation during one ROP period.

Data Source

P6 EBS-W

Source Field

ebsPeakNoRLUsingSF16

Source Section

UtranCell

ebsPeakNoRLUsingSF4

Peak of the number of admitted radio links using uplink spreading factor 4 at the time of event generation during one ROP period.

Data Source

P6 EBS-W

© Copyright IBM Corp. 2008, 2009. All Rights Reserved.

Source Field

ebsPeakNoRLUsingSF4

Source Section

UtranCell

ebsPeakNoRLUsingSF8

Peak of the number of admitted radio links using uplink spreading factor 8 at the time of event generation during one ROP period.

Data Source

P6 EBS-W

Source Field

ebsPeakNoRLUsingSF8

Source Section

UtranCell

ebsPeakNoUsersAssignedPhyHSDPAChannels

Peak of the number of users assigned to the physical HSDPA channels at the time of event generation during one ROP period.

Data Source

P6 EBS-W

Source Field

ebsPeakNoUsersAssignedPhyHSDPAChannels

Source Section

UtranCell

ebsPeakTransCarrierPower

Peak of the Transmitted Carrier Power measurements expressed in % value at the time of event generation during one ROP period.

Data Source

P6 EBS-W

Source Field

ebsPeakTransCarrierPower

Source Section

UtranCell

ebsPeakTransCarrierPowerNonHS

Peak of the Transmitted Carrier Power Non HS measurements expressed in % value at the time of event generation during one ROP period.

Data Source

P6 EBS-W

Source Field

ebsPeakTransCarrierPowerNonHS

Source Section

UtranCell

ebsPeakULInterference

Peak of the Received UL Interference measurements (.1 resolution) at the time of event generation during one ROP period. Also referred to as Received Total Wideband Power (RTWP).

Data Source

P6 EBS-W

Source Field

ebsPeakULInterference

Source Section

UtranCell

ebsPeakULTotalASE

Peak of the Total Air interface Speech Equivalents (ASEs) uplink at the time of event generation during one ROP period.

Data Source

P6 EBS-W

© Copyright IBM Corp. 2008, 2009. All Rights Reserved.

Source Field

ebsPeakULTotalASE

Source Section

UtranCell

ebsSumDLChCodeTreeUsage

Aggregate the % values of the total downlink channelization code tree usage measurements at the time of event generation during one ROP period.

Data Source

P6 EBS-W

Source Field

ebsSumDLChCodeTreeUsage

Source Section

UtranCell

ebsSumDLMaxPower

Aggregate the dBm values of the maximum DL power measurements (.1 dBm resolution) at the time of event generation during one ROP period.

Data Source

P6 EBS-W

Source Field

ebsSumDLMaxPower

Source Section

UtranCell

ebsSumDLTotalASE

Aggregate of the Total Air Interface Speech Equivalents (ASEs) downlink at the time of event generation during one ROP period.

Data Source

P6 EBS-W

Source Field

ebsSumDLTotalASE

Source Section

UtranCell

ebsSumHSDSCHReqPower

Aggregate the % values of the transmitted carrier power (HS-DSCH Required Power, .1 % resolution) of all codes not used for HS-PDSCH or HS-SCCH transmission measurements at the time of event generation during one ROP period.

Data Source

P6 EBS-W

Source Field

ebsSumHSDSCHReqPower

Source Section

UtranCell

ebsSumNoDLComModeUsers

Aggregate of the number of DL compressed mode users at the time of event generation during one ROP period.

Data Source

P6 EBS-W

Source Field

ebsSumNoDLComModeUsers

Source Section

UtranCell

ebsSumNoDLConSF16

Aggregate of the total number of downlink connections for spreading factor 16 at the time of event generation during one ROP period.

Data Source

P6 EBS-W

© Copyright IBM Corp. 2008, 2009. All Rights Reserved.

Source Field

ebsSumNoDLConSF16

Source Section

UtranCell

ebsSumNoDLConSF32

Aggregate of the total number of downlink connections for spreading factor 32 at the time of event generation during one ROP period.

Data Source

P6 EBS-W

Source Field

ebsSumNoDLConSF32

Source Section

UtranCell

ebsSumNoDLConSF8

Aggregate of the total number of downlink connections for spreading factor 8 at the time of event generation during one ROP period.

Data Source

P6 EBS-W

Source Field

ebsSumNoDLConSF8

Source Section

UtranCell

ebsSumNoEDCHUsersNonServCell

Aggregate of the number of E-DCH users in a non-serving cell at the time of event generation during one ROP period.

Data Source

P6 EBS-W

Source Field

ebsSumNoEDCHUsersNonServCell

Source Section

UtranCell

ebsSumNoEDCHUsersServCell

Aggregate the total number of E-DCH users in the serving cell at the time of event generation during one ROP period.

Data Source

P6 EBS-W

Source Field

ebsSumNoEDCHUsersServCell

Source Section

UtranCell

ebsSumNoRLUsingSF16

Aggregate of the total number of admitted radio links using uplink spreading factor 16 at the time of event generation during one ROP period.

Data Source

P6 EBS-W

Source Field

ebsSumNoRLUsingSF16

Source Section

UtranCell

ebsSumNoRLUsingSF4

Aggregate of the total number of admitted radio links using uplink spreading factor 4 at the time of event generation during one ROP period.

Data Source

P6 EBS-W

© Copyright IBM Corp. 2008, 2009. All Rights Reserved.

Source Field

ebsSumNoRLUsingSF4

Source Section

UtranCell

ebsSumNoRLUsingSF8

Aggregate of the total number of admitted radio links using uplink spreading factor 8 at the time of event generation during one ROP period.

Data Source

P6 EBS-W

Source Field

ebsSumNoRLUsingSF8

Source Section

UtranCell

ebsSumNoUsersAssignedPhyHSDPAChannels

Aggregate on the total number of users assigned to the physical HSDPA channels at the time of event generation during one ROP period.

Data Source

P6 EBS-W

Source Field

ebsSumNoUsersAssignedPhyHSDPAChannels

Source Section

UtranCell

ebsSumSqrDLChCodeTreeUsage

Aggregate the % values of the squares of the individual measurements in ebsSumDLChCodeTreeUsuage during one ROP period.

Data Source

P6 EBS-W

Source Field

ebsSumSqrDLChCodeTreeUsage

Source Section

UtranCell

ebsSumSqrDLMaxPower

Aggregate the dBm values of the squares of the individual measurements in ebsSumDLMaxPower.

Data Source

P6 EBS-W

Source Field

ebsSumSqrDLMaxPower

Source Section

UtranCell

ebsSumSQRDLTotalASE

Aggregate of the squares of the individual measurements in ebsSumDLTotalASE at the time of event generation during one ROP period.

Data Source

P6 EBS-W

Source Field

ebsSumSQRDLTotalASE

Source Section

UtranCell

ebsSumSqrHSDSCHReqPower

Aggregate the % values of the squares of the individual measurements in ebsSumHSDSCHReqPower during one ROP period.

Data Source

P6 EBS-W

© Copyright IBM Corp. 2008, 2009. All Rights Reserved.

Source Field

ebsSumSqrHSDSCHReqPower

Source Section

UtranCell

ebsSumSqrNoDLComModeUsers

Aggregate of the squares of the individual measurements in ebsSumNoDLComModeUsers during one ROP period.

Data Source

P6 EBS-W

Source Field

ebsSumSqrNoDLComModeUsers

Source Section

UtranCell

ebsSumSqrNoDLConSF16

Aggregate of the squares of the individual measurements in ebsSumNoDLConSF16 during one ROP period.

Data Source

P6 EBS-W

Source Field

ebsSumSqrNoDLConSF16

Source Section

UtranCell

ebsSumSqrNoDLConSF32

Aggregate of the squares of the individual measurements in ebsSumNoDLConSF32 during one ROP period.

Data Source

P6 EBS-W

Source Field

ebsSumSqrNoDLConSF32

Source Section

UtranCell

ebsSumSqrNoDLConSF8

Aggregate of the squares of the individual measurements in ebsSumNoDLConSF8 during one ROP period.

Data Source

P6 EBS-W

Source Field

ebsSumSqrNoDLConSF8

Source Section

UtranCell

ebsSumSqrNoEDCHUsersNonServCell

Aggregate of the squares of the individual measurements in ebsSumNoEDCHUsersNonServCell during one ROP period.

Data Source

P6 EBS-W

Source Field

ebsSumSqrNoEDCHUsersNonServCell

Source Section

UtranCell

ebsSumSqrNoEDCHUsersServCell

Aggregate of the squares of the individual measurements in ebsSumNoEDCHUsersServCell during one ROP period.

Data Source

P6 EBS-W

© Copyright IBM Corp. 2008, 2009. All Rights Reserved.

Source Field

ebsSumSqrNoEDCHUsersServCell

Source Section

UtranCell

ebsSumSqrNoRLUsingSF16

Aggregate of the squares of the individual measurements in ebsSumNoRLUsingSF16 during one ROP period.

Data Source

P6 EBS-W

Source Field

ebsSumSqrNoRLUsingSF16

Source Section

UtranCell

ebsSumSqrNoRLUsingSF4

Aggregate of the squares of the individual measurements in ebsSumNoRLUsingSF4 during one ROP period.

Data Source

P6 EBS-W

Source Field

ebsSumSqrNoRLUsingSF4

Source Section

UtranCell

ebsSumSqrNoRLUsingSF8

Aggregate of the squares of the individual measurements in ebsSumNoRLUsingSF8 during one ROP period.

Data Source

P6 EBS-W

Source Field

ebsSumSqrNoRLUsingSF8

Source Section

UtranCell

ebsSumSqrNoUsersAssignedPhyHSDPAChannels

Aggregate of the squares of the individual measurements in ebsSumNoUsersAssignedPhyHSDPAChannels during one ROP period.

Data Source

P6 EBS-W

Source Field

ebsSumSqrNoUsersAssignedPhyHSDPAChannels

Source Section

UtranCell

ebsSumSqrTransCarrierPower

Aggregate the % values of the squares of the individual measurements in ebsSumTransCarrierPower during one ROP period.

Data Source

P6 EBS-W

Source Field

ebsSumSqrTransCarrierPower

Source Section

UtranCell

ebsSumSqrTransCarrierPowerNonHS

Aggregate the % values of the squares of the individual measurements in ebsSumTransCarrierPowerNonHS during one ROP period.

Data Source

P6 EBS-W

© Copyright IBM Corp. 2008, 2009. All Rights Reserved.

Source Field

ebsSumSqrTransCarrierPowerNonHS

Source Section

UtranCell

ebsSumSqrULInterference

Aggregate of the squares of the individual measurements in ebsSumULInterference during one ROP period.

Data Source

P6 EBS-W

Source Field

ebsSumSqrULInterference

Source Section

UtranCell

ebsSumSQRULTotalASE

Aggregate of the squares of the individual measurements in ebsSumULTotalASE during one ROP period.

Data Source

P6 EBS-W

Source Field

ebsSumSQRULTotalASE

Source Section

UtranCell

ebsSumTransCarrierPower

Aggregate the % values of the Transmitted Carrier Power measurements at the time of event generation during one ROP period.

Data Source

P6 EBS-W

Source Field

ebsSumTransCarrierPower

Source Section

UtranCell

ebsSumTransCarrierPowerNonHS

Aggregate the % values of the Transmitted Carrier Power Non HS measurements at the time of event generation during one ROP period.

Data Source

P6 EBS-W

Source Field

ebsSumTransCarrierPowerNonHS

Source Section

UtranCell

ebsSumULInterference

Aggregate of the Uplink interference measurements (.1 dB resolution) at the time of event generation during one ROP period. Also referred to as Received Total Wideband Power (RTWP).

Data Source

P6 EBS-W

Source Field

ebsSumULInterference

Source Section

UtranCell

ebsSumULTotalASE

Aggregate of the Total Air Interface Speech Equivalents (ASEs) uplink at the time of event generation during one ROP period.

Data Source

P6 EBS-W

© Copyright IBM Corp. 2008, 2009. All Rights Reserved.

Source Field

ebsSumULTotalASE

Source Section

UtranCell

ebsTransCarrierPower_Average

Average the % values of the Transmitted Carrier Power measurements at the time of event generation during one ROP period.

Data Source

P6 EBS-W

ebsTransCarrierPowerNonHS_Average

Average the % values of the Transmitted Carrier Power Non HS measurements at the time of event generation during one ROP period.

Data Source

P6 EBS-W

ebsULInterference_Average

Average of the Uplink interference measurements (.1 dB resolution) at the time of event generation during one ROP period. Also referred to as Received Total Wideband Power (RTWP).

Data Source

P6 EBS-W

ebsULInterference_PEAK

Peak of the Received UL Interference measurements (.1 resolution) at the time of event generation during one ROP period. Also referred to as Received Total Wideband Power (RTWP). This preloaded calculation has normalized the actual value in 0.1dBm resolution.

Data Source

P6 EBS-W

ebsULInterference_SUM

Aggregate of the Uplink interference measurements (.1 dB resolution) at the time of event generation during one ROP period. Also referred to as Received Total Wideband Power (RTWP). This preloaded calculation has normalized the actual value in 0.1dBm resolution.

Data Source

P6 EBS-W

ebsULTotalASE_Average

Average of the Total Air Interface Speech Equivalents (ASEs) uplink at the time of event generation during one ROP period.

Data Source

P6 EBS-W

ER_CS_Speech_Average_ICABH_Hold_Time_Denuminator

The denominator of a intermediate expression to calculat ER_CS_Speech_Average_ICABH_Hold_Time with the preload formula (pmSamplesBestCs12Establish*vsum(pmNoRabEstablishSuccessSpeech,UtranRelation.pmRlAddSuccessBestCellSpeech))

Data Source

NodeB_RNC

Source Section

Diversity

ER_CS_Speech_Average_ICABH_Hold_Time_Numerator

The numerator of a intermediate expression to calculate ER_CS_Speech_Average_ICABH_Hold_Time with the preload formula (PERLENSEC*pmSumBestCs12Establish)

Data Source

NodeB_RNC

Source Section

Diversity

ER_Percentage_UEs_with_1RL_in_ActiveSet_Numerator

The numerator of a intermediate expression to calculate ER_Percentage_UEs_with_1RL_in_ActiveSet with the preload formula (pmSumUesWith1Rls1RlInActSet / pmSamplesUesWith1Rls1RlInActSet)

Data Source

NodeB_RNC

© Copyright IBM Corp. 2008, 2009. All Rights Reserved.

Source Section

Diversity

ER_Percentage_UEs_with_2RL_in_ActiveSet_Denominator

One of the two numerators of a intermediate expression to calculate ER_Percentage_UEs_with_2RL_in_ActiveSet with the preload formula (pmSumUesWith2Rls2RlInActSet/pmSamplesUesWith2Rls2RlInActSet)

Data Source

NodeB_RNC

Source Section

Diversity

ER_Percentage_UEs_with_2RL_in_ActiveSet_Numerator

One of the two numerators of a intermediate expression to calculate ER_Percentage_UEs_with_2RL_in_ActiveSet with the preload formula (pmSumUesWith1Rls2RlInActSet/pmSamplesUesWith1Rls2RlInActSet)

Data Source

NodeB_RNC

Source Section

Diversity

ER_Percentage_UEs_with_3RL_in_ActiveSet_Denominator

One of the denominator of a intermediate expression to calculate ER_Percentage_UEs_with_3RL_in_ActiveSet with the preload formula (pmSumUesWith3Rls3RlInActSet/pmSamplesUesWith3Rls3RlInActSet)

Data Source

NodeB_RNC

Source Section

Diversity

ER_Percentage_UEs_with_3RL_in_ActiveSet_Numerator1

One of the two numerators of a intermediate expression to calculate ER_Percentage_UEs_with_3RL_in_ActiveSet with the preload formula (pmSumUesWith1Rls3RlInActSet/pmSamplesUesWith1Rls3RlInActSet)

Data Source

NodeB_RNC

Source Section

Diversity

ER_Percentage_UEs_with_3RL_in_ActiveSet_Numerator2

One of the two numerators of a intermediate expression to calculate ER_Percentage_UEs_with_3RL_in_ActiveSet with the preload formula (pmSumUesWith2Rls3RlInActSet/pmSamplesUesWith2Rls3RlInActSet)

Data Source

NodeB_RNC

Source Section

Diversity

ER_Percentage_UEs_with_4RL_in_ActiveSet_Denominator

One of the denominator of a intermediate expression to calculate ER_Percentage_UEs_with_4RL_in_ActiveSet with the preload formula (pmSumUesWith4Rls4RlInActSet/pmSamplesUesWith4Rls4RlInActSet)

Data Source

NodeB_RNC

Source Section

Diversity

ER_Percentage_UEs_with_4RL_in_ActiveSet_Numerator1

One of the two numerators of a intermediate expression to calculate ER_Percentage_UEs_with_4RL_in_ActiveSet with the preload formula (pmSumUesWith2Rls4RlInActSet/pmSamplesUesWith2Rls4RlInActSet)

Data Source

NodeB_RNC

Source Section

Diversity

© Copyright IBM Corp. 2008, 2009. All Rights Reserved.

ER_Percentage_UEs_with_4RL_in_ActiveSet_Numerator2

One of the two numerators of a intermediate expression to calculate ER_Percentage_UEs_with_4RL_in_ActiveSet with the preload formula (pmSumUesWith3Rls4RlInActSet/pmSamplesUesWith3Rls4RlInActSet)

Data Source

NodeB_RNC

Source Section

Diversity

fach1RateMatchingAttrDl

System constant. { long, Default=220 }

Data Source

Bulk CM

Source Section

Fach

fach2RateMatchingAttrDl

System constant. { long, Default=130 }

Data Source

Bulk CM

Source Section

Fach

fachMeasOccaCycLenCoeff

Fach Measurement Occasion Cycle Length coefficient. A factor used when the UE performs inter-frequency and inter-system measurements. { long, Range = 0..12, Default=0 }

Data Source

Bulk CM

Source Section

UtranCell

fPwrDown

System constant. { long, Default=10 }

Data Source

Bulk CM

Source Section

UtranCell

fPwrUp

System constant. { long, Default=20 }

Data Source

Bulk CM

Source Section

UtranCell

hardIfhoCorr

Correction factor to be used in the calculation of initial power for SRB in hard interfrequency handover situations. { long, Range = -5..15, Default=3 }

Data Source

Bulk CM

Source Section

UtranCell

hoType

Indicates whether GSM HO, IFHO or no handover shall be attempted when a handover from the current WCDMA frequency is triggered by the connection quality monitoring, indicating that the WCDMA quality is low. { string, Default= GSM_PREFERRED }

Data Source

Bulk CM

Source Section

UtranCell

© Copyright IBM Corp. 2008, 2009. All Rights Reserved.

hsdpaUsersAdm

Admission limit for the number of users assigned to the HS-PDSCH/HS-SCCH in the cell. The limit is only applicable to RAB setup of HSDPA. { long, Range = 0..1000, Default=10 }

Data Source

Bulk CM

Source Section

UtranCell

hsMeasurementPowerOffset

The Measurement power offset, also called gamma, sent to the UE and RBS via RRC and NBAP. Used to offset the CQI in order to utilize the whole CQI range. { long, Range = -60..130, Default=0 }

Data Source

Bulk CM

Source Section

Hsdsch

hsPathlossThreshold

Maximum pathloss allowed for Serving HS-DSCH cell selection to validate the target cell for selection. { long, Range = 15..170, Default=170 }

Data Source

Bulk CM

Source Section

CoverageRelation

iFCong

Threshold at which UL congestion is detected in the cell. { long, Range = 0..621, Default=621 }

Data Source

Bulk CM

Source Section

UtranCell

iFHyst

Hysterese time setting for detection of congestion in the UL RTWP in a cell. { long, Range = 0..6000, Default=6000 }

Data Source

Bulk CM

Source Section

UtranCell

iFOffset

Offset that, together with parameter iFCong, determines the RTWP measurement level at which UL congestion is to be resolved. { long, Range = 0..621, Default=0 }

Data Source

Bulk CM

Source Section

UtranCell

individualOffset

Used in UE function event-reporting. This offset is added to the measured quantity before the UE evaluates if an event has occured. { long, Range = -100..100, Default=0 }

Data Source

Bulk CM

Source Section

UtranCell

initialAckNackRepetitionFactor

The initial number of repetitions for ACK/NACK feedback transmissions on HS-DPCCH. { long, Range = 1..4, Default=1 }

Data Source

Bulk CM

Source Section

Hsdsch

© Copyright IBM Corp. 2008, 2009. All Rights Reserved.

initialCqiRepetitionFactor

The initial number of repetitions for CQI report messages on HS-DPCCH. { long, Range = 1..4, Default=1 }

Data Source

Bulk CM

Source Section

Hsdsch

intCongFilter

System constant. { long, Default=1 }

Data Source

Bulk CM

Source Section

UtranCell

interFreqFddMeasIndicator

Inter-frequency FDD measurement indicator. { BooleanVals, Default= FALSE }

Data Source

Bulk CM

Source Section

UtranCell

interPwrMax

Intermediate relative power for maximum power mapping. { long, Range = -350..150, Default=38 }

Data Source

Bulk CM

Source Section

UtranCell

interRate

Intermediate rate for maximum power mapping. { long, Range = 0..1600000, Default=7760 }

Data Source

Bulk CM

Source Section

UtranCell

lac

Location Area Code, LAC (Ref. 3GPP TS 23.003)

Data Source

Bulk CM

Source Field

un:lac

Source Section

UtranCell

loadSharingGsmFraction

Defines percentage of Speech calls that can be directed to GSM after the loadSharingGsmThreshold has been exceeded { long, Range = 0..100, Default=100 }

Data Source

Bulk CM

Source Section

UtranCell

loadSharingGsmThreshold

Defines percentage of the guaranteed non-handover admission limit (pwrAdm) above which Directed Retry should be invoked { long, Range = 0..100, Default=75 }

Data Source

Bulk CM

© Copyright IBM Corp. 2008, 2009. All Rights Reserved.

Source Section

UtranCell

loadSharingMargin

Offset added to the DL power of the cell at inter-frequency load sharing evaluation. { long, Range = 0..100, Default=0 }

Data Source

Bulk CM

Source Section

UtranCell

localCellId

Represents resources in the RBS that can be used for the configuration of a cell.Local Cell id is used to uniquely identify the set of resources defined in a Node B to support a cell (as defined by a Cid Ref. 3GPP TS 25.401). { long, Range = 0..268435455, Default=Mandatory }

Data Source

Bulk CM

Source Field

un:localCellId

Source Section

UtranCell

maxFach1Power

Maximum power, to be used for transmitting the first FACH channel, relative the primaryCpichPower value. { long, Range = -350..150, Default=18 }

Data Source

Bulk CM

Source Section

Fach

maxFach2Power

Maximum power, to be used for transmitting the second FACH channel, relative the primaryCpichPower value. { long, Range = -350..150, Default=15 }

Data Source

Bulk CM

Source Section

Fach

maximumTransmissionPower

The maximum transmission power of a cell, DL Power (Ref. 3GPP TS 25.433). { long, Range = 0..500, Default=400 }

Data Source

Bulk CM

Source Field

un:maximumTransmissionPower

Source Section

UtranCell

maxPwrMax

Maximum relative power for maximum power mapping. { long, Range = -350..150, Default=48 }

Data Source

Bulk CM

Source Section

UtranCell

maxRate

Maximum rate for maximum power mapping. { long, Range = 0..1600000, Default=40690 }

Data Source

Bulk CM

© Copyright IBM Corp. 2008, 2009. All Rights Reserved.

Source Section

UtranCell

maxTxPowerUl

The maximum UE transmission power on the RACH when accessing the system. Used in UE functions for cell selection/reselection in idle mode and connected mode. { long, Range = -50..33, Default=24 }

Data Source

Bulk CM

Source Section

UtranCell

minimumRate

Minimum rate for maximum power mapping. { long, Range = 0..1600000, Default=1590 }

Data Source

Bulk CM

Source Section

UtranCell

minPwrMax

Minimum relative power for maximum power mapping. { long, Range = -350..150, Default=0 }

Data Source

Bulk CM

Source Section

UtranCell

minPwrRl

Minimum power per RL. { long, Range = -350..150, Default=-150 }

Data Source

Bulk CM

Source Section

UtranCell

nInSyncInd

Number of frames to be considered for in-sync detection. { long, Range = 1..256, Default=3 }

Data Source

Bulk CM

Source Section

UtranCell

NodeB_RELEASE

Release

Data Source

NodeB_RNC_RXI

Source Section

UtranCell

nOutSyncInd

Number of frames to be considered for out-of-sync detection. { long, Range = 1..256, Default=10 }

Data Source

Bulk CM

Source Section

UtranCell

numHsPdschCodes

Number of codes of SF=16 used for the HS-PDSCH. { long, Range = 1..5, Default=5 }

Data Source

Bulk CM

© Copyright IBM Corp. 2008, 2009. All Rights Reserved.

Source Section

Hsdsch

operationalState

The operational state of the FACH channel. { string, Default= ENABLED, ReadOnly, NonPersistent, }

Data Source

Bulk CM

Source Section

Fach

operationalState_CM

The operational state of the cell. { string, Default= ENABLED, ReadOnly, NonPersistent, }

Data Source

Bulk CM

Source Section

UtranCell

operationalState_CM_HSDPA

The operational state of the HSDPA resources in the cell. { string, Default= ENABLED, ReadOnly, NonPersistent, }

Data Source

Bulk CM

Source Section

Hsdsch

operationalState_CM_PCH

The operational state of the channel. { string, Default= ENABLED, ReadOnly, NonPersistent, }

Data Source

Bulk CM

Source Section

Pch

pchPower

Maximum power to be used for transmitting the PCH, relative to the primaryCpichPower value. { long, Range = -350..150, Default=-4 }

Data Source

Bulk CM

Source Section

Pch

PERLENSEC

Period Length

Data Source

NodeB_RNC_RXI

Source Field

perlensec

Source Section

UtranCell_WMGeneral

PERLENSEC_K

Period length in seconds aggregation summation in time domain and aggregation maximum between Network Elements.

Data Source

NodeB_RNC

Source Field

perlensec

Source Section

UtranCell_WMGeneral

© Copyright IBM Corp. 2008, 2009. All Rights Reserved.

pichMode

System constant. { long, Default=18 }

Data Source

Bulk CM

Source Section

Pch

pichPower

PICH power is the power to be used for transmitting on the physical channel carrying the paging indicators, relative to the primaryCpichPower value. { long, Range = -10..5, Default=-7 }

Data Source

Bulk CM

Source Section

Pch

pmAttNonBlindInterFreqHoCsConversational_RUP

Number of attempted non-blind outgoing inter-frequency handovers for RAB = CS Conversational except speech (roll up from UtranRelation)

Data Source

NodeB_RNC_RXI

Source Field

pmAttNonBlindInterFreqHoCsConversational

Source Section

UtranRelation

pmAttNonBlindInterFreqHoCsSpeech12_RUP

Number of attempted non-blind outgoing inter-frequency handovers for RAB = Conversational speech (roll up from UtranRelation)

Data Source

NodeB_RNC_RXI

Source Field

pmAttNonBlindInterFreqHoCsSpeech12

Source Section

UtranRelation

pmAttNonBlindInterFreqHoPsInteractiveGreater64_RUP

Number of attempted non-blind outgoing inter-frequency handovers for RAB = Interactive greater than 64 kbps (roll up from UtranRelation)

Data Source

NodeB_RNC_RXI

Source Field

pmAttNonBlindInterFreqHoPsInteractiveGreater64

Source Section

UtranRelation

pmAttNonBlindInterFreqHoPsInteractiveLess64_RUP

Number of attempted non-blind outgoing inter-frequency handovers for RAB = Interactive less than or equal to 64 kbps (roll up from UtranRelation)

Data Source

NodeB_RNC_RXI

Source Field

pmAttNonBlindInterFreqHoPsInteractiveLess64

Source Section

UtranRelation

pmAttNonBlindInterFreqHoStreamingOther_RUP

Number of attempted non-blind outgoing inter-frequency handovers for RAB = Streaming (roll up from UtranRelation)

Data Source

NodeB_RNC_RXI

© Copyright IBM Corp. 2008, 2009. All Rights Reserved.

Source Field

pmAttNonBlindInterFreqHoStreamingOther

Source Section

UtranRelation

pmBmcTrafficVolume

Accumulated BMC payload.

Data Source

RNC

Source Field

pmBmcTrafficVolume

Source Section

UtranCell

pmCellDowntimeAuto

The length of time during which a cell is unavailable for service because, due to a fault, the system has set a cell or channel state to disabled

Data Source

NodeB_RNC_RXI

Source Field

pmCellDowntimeAuto

Source Section

UtranCell

pmCellDowntimeMan

The length of time during which a cell is unavailable for service because of administration state being set to manual lock

Data Source

NodeB_RNC_RXI

Source Field

pmCellDowntimeMan

Source Section

UtranCell

pmChSwitchAttemptFachUra

Number of channel downswitching attempts from CELL_FACH to URA_PCH.

Data Source

RNC

Source Field

pmChSwitchAttemptFachUra

Source Section

UtranCell

pmChSwitchAttemptUraFach

Number of transitions attempted URA_PCH ->Cell_FACH.

Data Source

RNC

Source Field

pmChSwitchAttemptUraFach

Source Section

UtranCell

pmChSwitchDch128Fach

(Retired on P6)Number of attempted channel switches from a RAB with 128 kbps data rate on DCH to common channel (Cell_FACH state)

Data Source

NodeB_RNC_RXI

© Copyright IBM Corp. 2008, 2009. All Rights Reserved.

Source Field

pmChSwitchDch128Fach

Source Section

UtranCell

pmChSwitchDch384Fach

(Retired on P6)Number of attempted channel switches from a RAB with 384 kbps data rate on DCH to common channel (Cell_FACH state)

Data Source

NodeB_RNC_RXI

Source Field

pmChSwitchDch384Fach

Source Section

UtranCell

pmChSwitchDch64Fach

(Retired on P6)Number of attempted channel switches from a RAB with 64 kbps data rate on DCH to common channel (Cell_FACH state)

Data Source

NodeB_RNC_RXI

Source Field

pmChSwitchDch64Fach

Source Section

UtranCell

pmChSwitchFachDch

(Retired on P6)Number of switch from Common to dedicated Channel (CELL_FACH to CELL_DCH state)

Data Source

NodeB_RNC_RXI

Source Field

pmChSwitchFachDch

Source Section

UtranCell

pmChSwitchFachIdle

Number of attempted switches from common channel to idle (Cell_FACH to idle, connection release)

Data Source

NodeB_RNC_RXI

Source Field

pmChSwitchFachIdle

Source Section

UtranCell

pmChSwitchP128P384

(Retired on P6)Number of attempted channel switches from PS128 kbps to PS384 kbps RAB, after admission and throughput based attempts

Data Source

NodeB_RNC_RXI

Source Field

pmChSwitchP128P384

Source Section

UtranCell

pmChSwitchP128P64

(Retired on P6)Number of attempted channel switches from a PS128 kbps to a PS64 kbps RAB, based on DL code power based measurements

Data Source

NodeB_RNC_RXI

© Copyright IBM Corp. 2008, 2009. All Rights Reserved.

Source Field

pmChSwitchP128P64

Source Section

UtranCell

pmChSwitchP384P128

(Retired on P6)Number of attempted channel switches from a PS384 kbps to a PS128 kbps RAB, based on DL code power based measurements

Data Source

NodeB_RNC_RXI

Source Field

pmChSwitchP384P128

Source Section

UtranCell

pmChSwitchP64P128

(Retired on P6)Number of attempted channel switches from a PS64 kbps to a PS128 kbps RAB, based on DL code power based measurements

Data Source

NodeB_RNC_RXI

Source Field

pmChSwitchP64P128

Source Section

UtranCell

pmChSwitchSp0Sp64

(Retired on P6)Number of attempted channel switches from multi-RAB speech12.2+PS0/0 to multi-RAB speech12.2+PS64/64

Data Source

NodeB_RNC_RXI

Source Field

pmChSwitchSp0Sp64

Source Section

UtranCell

pmChSwitchSp64Sp0

(Retired on P6)Number of attempted channel switches from multi-RAB speech12.2+PS64/64 to multi-RAB speech12.2+PS0/0

Data Source

NodeB_RNC_RXI

Source Field

pmChSwitchSp64Sp0

Source Section

UtranCell

pmChSwitchSuccFachUra

Number of successful channel downswitching attempts from CELL_FACH to URA_PCH

Data Source

RNC

Source Field

pmChSwitchSuccFachUra

Source Section

UtranCell

pmChSwitchSuccUraFach

Number of transitions succeeded URA_PCH ->Cell_FACH.

Data Source

RNC

© Copyright IBM Corp. 2008, 2009. All Rights Reserved.

Source Field

pmChSwitchSuccUraFach

Source Section

UtranCell

pmCmAttDlHls

Attempted Compressed Mode starts for downlink using Higher Layer Selection (HLS) method.

Data Source

NodeB_RNC_RXI

Source Field

pmCmAttDlHls

Source Section

UtranCell

pmCmAttDlSf2

Attempted Compressed Mode starts for downlink using Lower Spreading Factor (SF/2) method.

Data Source

NodeB_RNC_RXI

Source Field

pmCmAttDlSf2

Source Section

UtranCell

pmCmAttUlHls

Attempted Compressed Mode starts for uplink using Higher Layer Selection (HLS) method.

Data Source

NodeB_RNC_RXI

Source Field

pmCmAttUlHls

Source Section

UtranCell

pmCmAttUlSf2

Attempted Compressed Mode starts for uplink using Lower Spreading Factor (SF/2) method.

Data Source

NodeB_RNC_RXI

Source Field

pmCmAttUlSf2

Source Section

UtranCell

pmCmStop

Number of Succ CM stops counting the Number of Succ Compressed mode deactivations.

Data Source

NodeB_RNC_RXI

Source Field

pmCmStop

Source Section

UtranCell

pmCmSuccDlHls

Successful CM starts for DL by using HLS method

Data Source

NodeB_RNC_RXI

Source Field

pmCmSuccDlHls

Source Section

UtranCell

© Copyright IBM Corp. 2008, 2009. All Rights Reserved.

pmCmSuccDlSf2

Successful CM starts for DL by using SF/2 method

Data Source

NodeB_RNC_RXI

Source Field

pmCmSuccDlSf2

Source Section

UtranCell

pmCmSuccUlHls

Successful CM starts for UL by using HLS method

Data Source

NodeB_RNC_RXI

Source Field

pmCmSuccUlHls

Source Section

UtranCell

pmCmSuccUlSf2

Successful CM starts for UL by using SF/2 method

Data Source

NodeB_RNC_RXI

Source Field

pmCmSuccUlSf2

Source Section

UtranCell

pmCnRabReleaseCs64

CS Video Drop rate - CN initiated abnormal releases. GPEH Event: RANAP_Rab_Assignment_Request, Internal_System_Release, RANAP_Iu_Release_Request

Data Source

GPEH P5ED

Source Field

pmCnRabReleaseCs64

Source Section

UtranCell

pmCnRabReleaseCsSpeech

CS Speech Drop rate - CN initiated abnormal releases GPEH Event: RANAP_Rab_Assignment_Request, Internal_System_Release, RANAP_Iu_Release_Request

Data Source

GPEH P5ED

Source Field

pmCnRabReleaseCsSpeech

Source Section

UtranCell

pmCnRabReleaseHs

HS Drop rate - CN initiated abnormal releases. GPEH Event: RANAP_Rab_Assignment_Request, Internal_System_Release, RANAP_Iu_Release_Request

Data Source

GPEH P5ED

Source Field

pmCnRabReleaseHs

Source Section

UtranCell

© Copyright IBM Corp. 2008, 2009. All Rights Reserved.

pmCnRabReleasePacket

PS Drop rate - CN initiated abnormal releases. GPEH Event: RANAP_Rab_Assignment_Request, Internal_System_Release, RANAP_Iu_Release_Request

Data Source

GPEH P5ED

Source Field

pmCnRabReleasePacket

Source Section

UtranCell

pmDchDlRlcUserPacketThp_00

The R99 DL RLC throughput (user data), excluding retransmissions.

Data Source

RNC

Source Field

pmDchDlRlcUserPacketThp

Source Section

UtranCell

pmDchDlRlcUserPacketThp_01

The R99 DL RLC throughput (user data), excluding retransmissions.

Data Source

RNC

Source Field

pmDchDlRlcUserPacketThp

Source Section

UtranCell

pmDchDlRlcUserPacketThp_02

The R99 DL RLC throughput (user data), excluding retransmissions.

Data Source

RNC

Source Field

pmDchDlRlcUserPacketThp

Source Section

UtranCell

pmDchDlRlcUserPacketThp_03

The R99 DL RLC throughput (user data), excluding retransmissions.

Data Source

RNC

Source Field

pmDchDlRlcUserPacketThp

Source Section

UtranCell

pmDchDlRlcUserPacketThp_04

The R99 DL RLC throughput (user data), excluding retransmissions.

Data Source

RNC

Source Field

pmDchDlRlcUserPacketThp

Source Section

UtranCell

pmDchDlRlcUserPacketThp_05

The R99 DL RLC throughput (user data), excluding retransmissions.

© Copyright IBM Corp. 2008, 2009. All Rights Reserved.

Data Source

RNC

Source Field

pmDchDlRlcUserPacketThp

Source Section

UtranCell

pmDchDlRlcUserPacketThp_06

The R99 DL RLC throughput (user data), excluding retransmissions.

Data Source

RNC

Source Field

pmDchDlRlcUserPacketThp

Source Section

UtranCell

pmDchDlRlcUserPacketThp_07

The R99 DL RLC throughput (user data), excluding retransmissions.

Data Source

RNC

Source Field

pmDchDlRlcUserPacketThp

Source Section

UtranCell

pmDchDlRlcUserPacketThp_08

The R99 DL RLC throughput (user data), excluding retransmissions.

Data Source

RNC

Source Field

pmDchDlRlcUserPacketThp

Source Section

UtranCell

pmDchDlRlcUserPacketThp_09

The R99 DL RLC throughput (user data), excluding retransmissions.

Data Source

RNC

Source Field

pmDchDlRlcUserPacketThp

Source Section

UtranCell

pmDchDlRlcUserPacketThp_10

The R99 DL RLC throughput (user data), excluding retransmissions.

Data Source

RNC

Source Field

pmDchDlRlcUserPacketThp

Source Section

UtranCell

pmDchDlRlcUserPacketThp_11

The R99 DL RLC throughput (user data), excluding retransmissions.

Data Source

RNC

Source Field

pmDchDlRlcUserPacketThp

© Copyright IBM Corp. 2008, 2009. All Rights Reserved.

Source Section

UtranCell

pmDchDlRlcUserPacketThp_12

The R99 DL RLC throughput (user data), excluding retransmissions.

Data Source

RNC

Source Field

pmDchDlRlcUserPacketThp

Source Section

UtranCell

pmDchDlRlcUserPacketThp_13

The R99 DL RLC throughput (user data), excluding retransmissions.

Data Source

RNC

Source Field

pmDchDlRlcUserPacketThp

Source Section

UtranCell

pmDchDlRlcUserPacketThp_14

The R99 DL RLC throughput (user data), excluding retransmissions.

Data Source

RNC

Source Field

pmDchDlRlcUserPacketThp

Source Section

UtranCell

pmDchDlRlcUserPacketThp_15

The R99 DL RLC throughput (user data), excluding retransmissions.

Data Source

RNC

Source Field

pmDchDlRlcUserPacketThp

Source Section

UtranCell

pmDchDlRlcUserPacketThp_16

The R99 DL RLC throughput (user data), excluding retransmissions.

Data Source

RNC

Source Field

pmDchDlRlcUserPacketThp

Source Section

UtranCell

pmDchDlRlcUserPacketThp_17

The R99 DL RLC throughput (user data), excluding retransmissions.

Data Source

RNC

Source Field

pmDchDlRlcUserPacketThp

Source Section

UtranCell

pmDchDlRlcUserPacketThp_18

The R99 DL RLC throughput (user data), excluding retransmissions.

© Copyright IBM Corp. 2008, 2009. All Rights Reserved.

Data Source

RNC

Source Field

pmDchDlRlcUserPacketThp

Source Section

UtranCell

pmDchDlRlcUserPacketThp_19

The R99 DL RLC throughput (user data), excluding retransmissions.

Data Source

RNC

Source Field

pmDchDlRlcUserPacketThp

Source Section

UtranCell

pmDchUlRlcUserPacketThp_00

The R99 UL RLC throughput (user data), excluding retransmissions.

Data Source

RNC

Source Field

pmDchUlRlcUserPacketThp

Source Section

UtranCell

pmDchUlRlcUserPacketThp_01

The R99 UL RLC throughput (user data), excluding retransmissions.

Data Source

RNC

Source Field

pmDchUlRlcUserPacketThp

Source Section

UtranCell

pmDchUlRlcUserPacketThp_02

The R99 UL RLC throughput (user data), excluding retransmissions.

Data Source

RNC

Source Field

pmDchUlRlcUserPacketThp

Source Section

UtranCell

pmDchUlRlcUserPacketThp_03

The R99 UL RLC throughput (user data), excluding retransmissions.

Data Source

RNC

Source Field

pmDchUlRlcUserPacketThp

Source Section

UtranCell

pmDchUlRlcUserPacketThp_04

The R99 UL RLC throughput (user data), excluding retransmissions.

Data Source

RNC

Source Field

pmDchUlRlcUserPacketThp

© Copyright IBM Corp. 2008, 2009. All Rights Reserved.

Source Section

UtranCell

pmDchUlRlcUserPacketThp_05

The R99 UL RLC throughput (user data), excluding retransmissions.

Data Source

RNC

Source Field

pmDchUlRlcUserPacketThp

Source Section

UtranCell

pmDchUlRlcUserPacketThp_06

The R99 UL RLC throughput (user data), excluding retransmissions.

Data Source

RNC

Source Field

pmDchUlRlcUserPacketThp

Source Section

UtranCell

pmDchUlRlcUserPacketThp_07

The R99 UL RLC throughput (user data), excluding retransmissions.

Data Source

RNC

Source Field

pmDchUlRlcUserPacketThp

Source Section

UtranCell

pmDchUlRlcUserPacketThp_08

The R99 UL RLC throughput (user data), excluding retransmissions.

Data Source

RNC

Source Field

pmDchUlRlcUserPacketThp

Source Section

UtranCell

pmDchUlRlcUserPacketThp_09

The R99 UL RLC throughput (user data), excluding retransmissions.

Data Source

RNC

Source Field

pmDchUlRlcUserPacketThp

Source Section

UtranCell

pmDchUlRlcUserPacketThp_10

The R99 UL RLC throughput (user data), excluding retransmissions.

Data Source

RNC

Source Field

pmDchUlRlcUserPacketThp

Source Section

UtranCell

pmDchUlRlcUserPacketThp_11

The R99 UL RLC throughput (user data), excluding retransmissions.

© Copyright IBM Corp. 2008, 2009. All Rights Reserved.

Data Source

RNC

Source Field

pmDchUlRlcUserPacketThp

Source Section

UtranCell

pmDchUlRlcUserPacketThp_12

The R99 UL RLC throughput (user data), excluding retransmissions.

Data Source

RNC

Source Field

pmDchUlRlcUserPacketThp

Source Section

UtranCell

pmDchUlRlcUserPacketThp_13

The R99 UL RLC throughput (user data), excluding retransmissions.

Data Source

RNC

Source Field

pmDchUlRlcUserPacketThp

Source Section

UtranCell

pmDchUlRlcUserPacketThp_14

The R99 UL RLC throughput (user data), excluding retransmissions.

Data Source

RNC

Source Field

pmDchUlRlcUserPacketThp

Source Section

UtranCell

pmDchUlRlcUserPacketThp_15

The R99 UL RLC throughput (user data), excluding retransmissions.

Data Source

RNC

Source Field

pmDchUlRlcUserPacketThp

Source Section

UtranCell

pmDchUlRlcUserPacketThp_16

The R99 UL RLC throughput (user data), excluding retransmissions.

Data Source

RNC

Source Field

pmDchUlRlcUserPacketThp

Source Section

UtranCell

pmDchUlRlcUserPacketThp_17

The R99 UL RLC throughput (user data), excluding retransmissions.

Data Source

RNC

Source Field

pmDchUlRlcUserPacketThp

© Copyright IBM Corp. 2008, 2009. All Rights Reserved.

Source Section

UtranCell

pmDchUlRlcUserPacketThp_18

The R99 UL RLC throughput (user data), excluding retransmissions.

Data Source

RNC

Source Field

pmDchUlRlcUserPacketThp

Source Section

UtranCell

pmDchUlRlcUserPacketThp_19

The R99 UL RLC throughput (user data), excluding retransmissions.

Data Source

RNC

Source Field

pmDchUlRlcUserPacketThp

Source Section

UtranCell

pmDiscRcLost

Release due to Radio Connection With UE Lost. Step counter when RANAP Iu Release Request is received and cause = Radio Connection With UE Lost.

Data Source

GPEH P4

Source Field

pmDiscRcLost

Source Section

UtranCell

pmDiscRelocOpt

Resource Optimisation Relocation. Step counter when RANAP Iu Release Request is received and cause = Resource Optimisation Relocation.

Data Source

GPEH P4

Source Field

pmDiscRelocOpt

Source Section

UtranCell

pmDiscRelocSucc

Successful Relocation. Step counter when RANAP Iu Release Request is received and cause = Successful Relocation.

Data Source

GPEH P4

Source Field

pmDiscRelocSucc

Source Section

UtranCell

pmDiscSigResFail

Release due to Signaling Transport Resource Failure Step counter when RANAP Iu Release Request is received and cause = Signaling Transport Resource Failure.

Data Source

GPEH P4

Source Field

pmDiscSigResFail

© Copyright IBM Corp. 2008, 2009. All Rights Reserved.

Source Section

UtranCell

pmDiscTRelocOverall

Trelocoverall Expiry. Step counter when RANAP Iu Release Request is received and cause = Trelocoverall Expiry.

Data Source

GPEH P4

Source Field

pmDiscTRelocOverall

Source Section

UtranCell

pmDiscUeInit

Release due to UE generated signalling connection release. Step counter when RANAP Iu Release Request is received and cause = Release due to UE generated signaling connection release.

Data Source

GPEH P4

Source Field

pmDiscUeInit

Source Section

UtranCell

pmDiscUnspecified

Release due to Unspecified Failure. Step counter when RANAP RAB Assignment Response is received and cause = Unspecified Failure.

Data Source

GPEH P4

Source Field

pmDiscUnspecified

Source Section

UtranCell

pmDiscUtran

Release due to UTRAN Generated Reason. Step counter when RANAP Iu Release Request is received and cause = Release due to UTRAN Generated Reason. For RAB Release, count once for each RAB that is to be released.

Data Source

GPEH P4

Source Field

pmDiscUtran

Source Section

UtranCell

pmDlRlcUserPacketThp_0_5

(Retired on P6)The DL RLC throughput (user data), including user data but excluding retransmissions, padding bits, data PDU headers and RLC control PDU in the area [0..5) Kbits per second

Source Field

pmDlRlcUserPacketThp

Source Section

UtranCell

pmDlRlcUserPacketThp_100_120

(Retired on P6)The DL RLC throughput (user data), including user data but excluding retransmissions, padding bits, data PDU headers and RLC control PDU in the area [100..120) in Kbits per second

Source Field

pmDlRlcUserPacketThp

Source Section

UtranCell

© Copyright IBM Corp. 2008, 2009. All Rights Reserved.

pmDlRlcUserPacketThp_1000_1250

(Retired on P6)The DL RLC throughput (user data), including user data but excluding retransmissions, padding bits, data PDU headers and RLC control PDU in the area [1000..1250) in Kbits per second

Source Field

pmDlRlcUserPacketThp

Source Section

UtranCell

pmDlRlcUserPacketThp_120_140

(Retired on P6)The DL RLC throughput (user data), including user data but excluding retransmissions, padding bits, data PDU headers and RLC control PDU in the area [120..140) in Kbits per second

Source Field

pmDlRlcUserPacketThp

Source Section

UtranCell

pmDlRlcUserPacketThp_1250_1500

(Retired on P6)The DL RLC throughput (user data), including user data but excluding retransmissions, padding bits, data PDU headers and RLC control PDU in the area [1250..1500) in Kbits per second

Source Field

pmDlRlcUserPacketThp

Source Section

UtranCell

pmDlRlcUserPacketThp_140_160

(Retired on P6)The DL RLC throughput (user data), including user data but excluding retransmissions, padding bits, data PDU headers and RLC control PDU in the area [140..160) in Kbits per second

Source Field

pmDlRlcUserPacketThp

Source Section

UtranCell

pmDlRlcUserPacketThp_1500_1750

(Retired on P6)The DL RLC throughput (user data), including user data but excluding retransmissions, padding bits, data PDU headers and RLC control PDU in the area [1500..1750) in Kbits per second

Source Field

pmDlRlcUserPacketThp

Source Section

UtranCell

pmDlRlcUserPacketThp_160_180

(Retired on P6)The DL RLC throughput (user data), including user data but excluding retransmissions, padding bits, data PDU headers and RLC control PDU in the area [160..180) in Kbits per second

Source Field

pmDlRlcUserPacketThp

Source Section

UtranCell

pmDlRlcUserPacketThp_1750_2000

(Retired on P6)The DL RLC throughput (user data), including user data but excluding retransmissions, padding bits, data PDU headers and RLC control PDU in the area [1750..2000) in Kbits per second

Source Field

pmDlRlcUserPacketThp

Source Section

UtranCell

pmDlRlcUserPacketThp_180_200

(Retired on P6)The DL RLC throughput (user data), including user data but excluding retransmissions, padding bits, data PDU headers and RLC control PDU in the area [180..200) in Kbits per second

© Copyright IBM Corp. 2008, 2009. All Rights Reserved.

Source Field

pmDlRlcUserPacketThp

Source Section

UtranCell

pmDlRlcUserPacketThp_20_40

(Retired on P6)The DL RLC throughput (user data), including user data but excluding retransmissions, padding bits, data PDU headers and RLC control PDU in the area [20..40) in Kbits per second

Data Source

Measured 2 times/second duration. Stored in Kbits per second, with resolution and range defined as below: [0] : [0..5) [1] : [5..20) [2] : [20..40) [3] : [40..60) . . [20] : [380..400) [21] : [400..500) . . [26] : [900..1000) [27] : [1000..1250) [28] : [1

Source Field

pmDlRlcUserPacketThp

Source Section

UtranCell

pmDlRlcUserPacketThp_200_220

(Retired on P6)The DL RLC throughput (user data), including user data but excluding retransmissions, padding bits, data PDU headers and RLC control PDU in the area [200..220) in Kbits per second

Source Field

pmDlRlcUserPacketThp

Source Section

UtranCell

pmDlRlcUserPacketThp_2000_2500

(Retired on P6)The DL RLC throughput (user data), including user data but excluding retransmissions, padding bits, data PDU headers and RLC control PDU in the area [2000..2500) in Kbits per second

Source Field

pmDlRlcUserPacketThp

Source Section

UtranCell

pmDlRlcUserPacketThp_220_240

(Retired on P6)The DL RLC throughput (user data), including user data but excluding retransmissions, padding bits, data PDU headers and RLC control PDU in the area [220..240) in Kbits per second

Source Field

pmDlRlcUserPacketThp

Source Section

UtranCell

pmDlRlcUserPacketThp_240_260

(Retired on P6)The DL RLC throughput (user data), including user data but excluding retransmissions, padding bits, data PDU headers and RLC control PDU in the area [240..260) in Kbits per second

Source Field

pmDlRlcUserPacketThp

Source Section

UtranCell

pmDlRlcUserPacketThp_2500_3000

(Retired on P6)The DL RLC throughput (user data), including user data but excluding retransmissions, padding bits, data PDU headers and RLC control PDU in the area [2500..3000) in Kbits per second

Source Field

pmDlRlcUserPacketThp

Source Section

UtranCell

pmDlRlcUserPacketThp_260_280

(Retired on P6)The DL RLC throughput (user data), including user data but excluding retransmissions, padding bits, data PDU headers and RLC control PDU in the area [260..280) in Kbits per second

© Copyright IBM Corp. 2008, 2009. All Rights Reserved.

Source Field

pmDlRlcUserPacketThp

Source Section

UtranCell

pmDlRlcUserPacketThp_280_300

(Retired on P6)The DL RLC throughput (user data), including user data but excluding retransmissions, padding bits, data PDU headers and RLC control PDU in the area [280..300) in Kbits per second

Source Field

pmDlRlcUserPacketThp

Source Section

UtranCell

pmDlRlcUserPacketThp_300_320

(Retired on P6)The DL RLC throughput (user data), including user data but excluding retransmissions, padding bits, data PDU headers and RLC control PDU in the area [300..320) in Kbits per second

Source Field

pmDlRlcUserPacketThp

Source Section

UtranCell

pmDlRlcUserPacketThp_3000_4000

(Retired on P6)The DL RLC throughput (user data), including user data but excluding retransmissions, padding bits, data PDU headers and RLC control PDU in the area [3000..4000) in Kbits per second

Source Field

pmDlRlcUserPacketThp

Source Section

UtranCell

pmDlRlcUserPacketThp_320_340

(Retired on P6)The DL RLC throughput (user data), including user data but excluding retransmissions, padding bits, data PDU headers and RLC control PDU in the area [320..340) in Kbits per second

Source Field

pmDlRlcUserPacketThp

Source Section

UtranCell

pmDlRlcUserPacketThp_340_360

(Retired on P6)The DL RLC throughput (user data), including user data but excluding retransmissions, padding bits, data PDU headers and RLC control PDU in the area [340..360) in Kbits per second

Source Field

pmDlRlcUserPacketThp

Source Section

UtranCell

pmDlRlcUserPacketThp_360_380

(Retired on P6)The DL RLC throughput (user data), including user data but excluding retransmissions, padding bits, data PDU headers and RLC control PDU in the area [360..380) in Kbits per second

Source Field

pmDlRlcUserPacketThp

Source Section

UtranCell

pmDlRlcUserPacketThp_380_400

(Retired on P6)The DL RLC throughput (user data), including user data but excluding retransmissions, padding bits, data PDU headers and RLC control PDU in the area [380..400) in Kbits per second

Source Field

pmDlRlcUserPacketThp

© Copyright IBM Corp. 2008, 2009. All Rights Reserved.

Source Section

UtranCell

pmDlRlcUserPacketThp_40_60

(Retired on P6)The DL RLC throughput (user data), including user data but excluding retransmissions, padding bits, data PDU headers and RLC control PDU in the area [40..60) in Kbits per second

Source Field

pmDlRlcUserPacketThp

Source Section

UtranCell

pmDlRlcUserPacketThp_400_500

(Retired on P6)The DL RLC throughput (user data), including user data but excluding retransmissions, padding bits, data PDU headers and RLC control PDU in the area [400..500) in Kbits per second

Source Field

pmDlRlcUserPacketThp

Source Section

UtranCell

pmDlRlcUserPacketThp_4000_5000

(Retired on P6)The DL RLC throughput (user data), including user data but excluding retransmissions, padding bits, data PDU headers and RLC control PDU in the area [4000..5000) in Kbits per second

Source Field

pmDlRlcUserPacketThp

Source Section

UtranCell

pmDlRlcUserPacketThp_5_20

(Retired on P6)The DL RLC throughput (user data), including user data but excluding retransmissions, padding bits, data PDU headers and RLC control PDU in the area [5..20) in Kbits per second

Source Field

pmDlRlcUserPacketThp

Source Section

UtranCell

pmDlRlcUserPacketThp_500_600

(Retired on P6)The DL RLC throughput (user data), including user data but excluding retransmissions, padding bits, data PDU headers and RLC control PDU in the area [500..600) in Kbits per second

Source Field

pmDlRlcUserPacketThp

Source Section

UtranCell

pmDlRlcUserPacketThp_5000_more

(Retired on P6)The DL RLC throughput (user data), including user data but excluding retransmissions, padding bits, data PDU headers and RLC control PDU in the area [5000..more) in Kbits per second

Source Field

pmDlRlcUserPacketThp

Source Section

UtranCell

pmDlRlcUserPacketThp_60_80

(Retired on P6)The DL RLC throughput (user data), including user data but excluding retransmissions, padding bits, data PDU headers and RLC control PDU in the area [60..80) in Kbits per second

Source Field

pmDlRlcUserPacketThp

Source Section

UtranCell

© Copyright IBM Corp. 2008, 2009. All Rights Reserved.

pmDlRlcUserPacketThp_600_700

(Retired on P6)The DL RLC throughput (user data), including user data but excluding retransmissions, padding bits, data PDU headers and RLC control PDU in the area [600..700) in Kbits per second

Source Field

pmDlRlcUserPacketThp

Source Section

UtranCell

pmDlRlcUserPacketThp_700_800

(Retired on P6)The DL RLC throughput (user data), including user data but excluding retransmissions, padding bits, data PDU headers and RLC control PDU in the area [700..800) in Kbits per second

Source Field

pmDlRlcUserPacketThp

Source Section

UtranCell

pmDlRlcUserPacketThp_80_100

(Retired on P6)The DL RLC throughput (user data), including user data but excluding retransmissions, padding bits, data PDU headers and RLC control PDU in the area [80..100) in Kbits per second

Source Field

pmDlRlcUserPacketThp

Source Section

UtranCell

pmDlRlcUserPacketThp_800_900

(Retired on P6)The DL RLC throughput (user data), including user data but excluding retransmissions, padding bits, data PDU headers and RLC control PDU in the area [800..900) in Kbits per second

Source Field

pmDlRlcUserPacketThp

Source Section

UtranCell

pmDlRlcUserPacketThp_900_1000

(Retired on P6)The DL RLC throughput (user data), including user data but excluding retransmissions, padding bits, data PDU headers and RLC control PDU in the area [900..1000) in Kbits per second

Source Field

pmDlRlcUserPacketThp

Source Section

UtranCell

pmDlRlcUserPacketThpP5MD_35

(Retired on P6)DL RLC throughput (user data), including user data but excluding retransmissions, padding bits, data PDU headers and RLC control PDU's. Measured every polling_time duration. Number of samples in the range 5000<= x <6000kbps

Data Source

RNC

Source Field

pmDlRlcUserPacketThp

Source Section

UtranCell

pmDlRlcUserPacketThpP5MD_36

(Retired on P6)DL RLC throughput (user data), including user data but excluding retransmissions, padding bits, data PDU headers and RLC control PDU's. Measured every polling_time duration. Number of samples in the range 6000<= x <7000kbps

Data Source

RNC

Source Field

pmDlRlcUserPacketThp

© Copyright IBM Corp. 2008, 2009. All Rights Reserved.

Source Section

UtranCell

pmDlRlcUserPacketThpP5MD_37

(Retired on P6)DL RLC throughput (user data), including user data but excluding retransmissions, padding bits, data PDU headers and RLC control PDU's. Measured every polling_time duration. Number of samples in the range 7000<= x <8000kbps

Data Source

RNC

Source Field

pmDlRlcUserPacketThp

Source Section

UtranCell

pmDlRlcUserPacketThpP5MD_38

(Retired on P6)DL RLC throughput (user data), including user data but excluding retransmissions, padding bits, data PDU headers and RLC control PDU's. Measured every polling_time duration. Number of samples in the range 8000<= x <10000kbps

Data Source

RNC

Source Field

pmDlRlcUserPacketThp

Source Section

UtranCell

pmDlRlcUserPacketThpP5MD_39

(Retired on P6)DL RLC throughput (user data), including user data but excluding retransmissions, padding bits, data PDU headers and RLC control PDU's. Measured every polling_time duration. Number of samples in the range 10000<= x <12000kbps

Data Source

RNC

Source Field

pmDlRlcUserPacketThp

Source Section

UtranCell

pmDlRlcUserPacketThpP5MD_40

(Retired on P6)DL RLC throughput (user data), including user data but excluding retransmissions, padding bits, data PDU headers and RLC control PDU's. Measured every polling_time duration. Number of samples in the range x >= 12000kbps

Data Source

RNC

Source Field

pmDlRlcUserPacketThp

Source Section

UtranCell

pmDlTrafficVolumeAmr4750

Payload traffic on DL in kbits for speech AMR4750 RAB after macro diversity.

Data Source

RNC

Source Field

pmDlTrafficVolumeAmr4750

Source Section

UtranCell

pmDlTrafficVolumeAmr5900

Payload traffic on DL in kbits for speech AMR5900 RAB after macro diversity.

Data Source

RNC

© Copyright IBM Corp. 2008, 2009. All Rights Reserved.

Source Field

pmDlTrafficVolumeAmr5900

Source Section

UtranCell

pmDlTrafficVolumeAmr7950

Payload traffic on DL in kbits for speech AMR7950 RAB after macro diversity.

Data Source

RNC

Source Field

pmDlTrafficVolumeAmr7950

Source Section

UtranCell

pmDlTrafficVolumeAmrNbMm

Payload traffic in the downlink for the conversational/speech AMR-NB Multimode RAB after macro diversity. Payload traffic includes both user data, and Medium Access Control (MAC) and Radio Link Control (RLC) header information. Retransmissions are also counted as part of the traffic volume.

Data Source

RNC

Source Field

pmDlTrafficVolumeAmrNbMm

Source Section

UtranCell

pmDlTrafficVolumeAmrWb

Payload traffic on Downlink in kb for conversational/speech AMR-WB RAB after macro diversity. Payload traffic includes user data, MAC and RLC header information, and retransmissions are also counted as part of the traffic volume.

Data Source

RNC

Source Field

pmDlTrafficVolumeAmrWb

Source Section

UtranCell

pmDlTrafficVolumeCs12

Payload traffic on downlink in kbits for conversational/speech 12.2 kbps Circuit Switched RAB after macro diversity

Data Source

NodeB_RNC_RXI

Source Field

pmDlTrafficVolumeCs12

Source Section

UtranCell

pmDlTrafficVolumeCs12Ps0

Payload traffic on DL in kbits for speech 12.2 kbps CS and PS 0/0 kbps multi RAB after macro diversity. - Retired fr 5.0.11.0.0

Data Source

NodeB_RNC_RXI

Source Field

pmDlTrafficVolumeCs12Ps0

Source Section

UtranCell

pmDlTrafficVolumeCs12Ps64

Payload traffic on DL in kbits for speech 12.2 kbps CS and PS 64/64 kbps multi RAB after macro diversity.- Retired fr 5.0.11.0.0

© Copyright IBM Corp. 2008, 2009. All Rights Reserved.

Data Source

NodeB_RNC_RXI

Source Field

pmDlTrafficVolumeCs12Ps64

Source Section

UtranCell

pmDlTrafficVolumeCs57

Payload traffic on downlink in kbits for streaming 57.6 kbps Circuit Switched RAB after macro diversity.

Data Source

NodeB_RNC_RXI

Source Field

pmDlTrafficVolumeCs57

Source Section

UtranCell

pmDlTrafficVolumeCs64

Payload traffic on downlink in kbits for conversational 64 kbps Circuit Switched RAB after macro diversity

Data Source

NodeB_RNC_RXI

Source Field

pmDlTrafficVolumeCs64

Source Section

UtranCell

pmDlTrafficVolumeCs64Ps8

Payload traffic on Downlink in Kbits on Dedicated Channel.- Retired fr 5.0.11.0.0

Data Source

RNC

Source Field

pmDlTrafficVolumeCs64Ps8

Source Section

UtranCell

pmDlTrafficVolumePs128

Payload traffic on downlink in kbits for Packet Switched 64/128 kbps RAB after macro diversity.

Data Source

NodeB_RNC_RXI

Source Field

pmDlTrafficVolumePs128

Source Section

UtranCell

pmDlTrafficVolumePs16

Monitors the payload traffic, including retransmissions, on Downlink (DL) in Kb for Interactive PS 16 kbps (DCH/DCH) RAB after macro diversity. Payload includes user data, Medium Access Control (MAC), Radio Link Control (RLC) header information.

Data Source

RNC

Source Field

pmDlTrafficVolumePs16

Source Section

UtranCell

pmDlTrafficVolumePs384

Payload traffic on downlink in kbits for PS 64/384 RAB after macro diversity.

© Copyright IBM Corp. 2008, 2009. All Rights Reserved.

Data Source

NodeB_RNC_RXI

Source Field

pmDlTrafficVolumePs384

Source Section

UtranCell

pmDlTrafficVolumePs64

Payload traffic on downlink in kbits for Packet Switched 64/64 kbps RAB after macro diversity.

Data Source

NodeB_RNC_RXI

Source Field

pmDlTrafficVolumePs64

Source Section

UtranCell

pmDlTrafficVolumePs8

Payload traffic (kbits) in DL after macro diversity for UeRc configurations which carry an Interactive DL TrCH with a maximum bit rate equal to 8 kbit/s. Only the PS Interactive part of the traffic volume is measured.

Data Source

RNC

Source Field

pmDlTrafficVolumePs8

Source Section

UtranCell

pmDlTrafficVolumePsCommon

Payload traffic on DL in kbits for PS RAB on FACH/RACH. Retransmissions are also counted as part of the traffic volume.

Data Source

NodeB_RNC_RXI

Source Field

pmDlTrafficVolumePsCommon

Source Section

UtranCell

pmDlTrafficVolumePsIntHs

Payload traffic (kbits) in DL for UeRc configurations for HS-DSCH. Only Interact. PS traffic is included.

Data Source

RNC

Source Field

pmDlTrafficVolumePsIntHs

Source Section

UtranCell

pmDlTrafficVolumePsStr128

Payload traffic (kbits) in DL after macro diversity for UeRc configurations which carry a Streaming DL TrCH with a maximum bit rate equal to 128 kbit/s. Only the PS Streaming part of the traffic volume is measured.

Data Source

RNC

Source Field

pmDlTrafficVolumePsStr128

Source Section

UtranCell

pmDlTrafficVolumePsStr128Ps8

Payload traffic on UL in kbits for PS Streaming 16/128 + Packet8kbps RABs after macro diversity.- Retired fr 5.0.11.0.0

© Copyright IBM Corp. 2008, 2009. All Rights Reserved.

Data Source

RNC

Source Field

pmDlTrafficVolumePsStr128Ps8

Source Section

UtranCell

pmDlTrafficVolumePsStr16

Payload traffic (kbits) in DL after macro diversity for UeRc configurations which carry a Streaming DL TrCH with a maximum bit rate equal to 16 kbit/s. Only the PS Streaming part of the traffic volume is measured.

Data Source

RNC

Source Field

pmDlTrafficVolumePsStr16

Source Section

UtranCell

pmDlTrafficVolumePsStr64

Payload traffic (kbits) in DL before macro diversity for UeRc configurations which carry a Streaming DL TrCH with a maximum bit rate equal to 64 kbit/s. Only the PS Streaming part of the traffic volume is measured.

Data Source

RNC

Source Field

pmDlTrafficVolumePsStr64

Source Section

UtranCell

pmDlTrafficVolumePsStr64Ps8

Payload traffic on DL in Kb for streaming 16/64 PS kbps and interactive/background 8/8 PS multi RAB after macrodiversity. Payload traffic includes user data, MAC and RLC header information, and retransmissions are also counted as part of the traffic volum- Retired fr 5.0.11.0.0

Data Source

NodeB_RNC_RXI

Source Field

pmDlTrafficVolumePsStr64Ps8

Source Section

UtranCell

pmDlTrafficVolumePsStrHs

Payload traffic (kbits) in DL for UeRc configurations which carries an Streaming PS DL Trch on HS-DSCH. Only PS Streaming traffic is included.

Data Source

RNC

Source Field

pmDlTrafficVolumePsStrHs

Source Section

UtranCell

pmDlTrafficVolumeSrb136

Payload traffic in the downlink for SRB 13.6 after macro diversity. Payload traffic includes both user data, and Medium Access Control (MAC) and Radio Link Control (RLC) header information. Retransmissions are also counted as part of the traffic volume.

Data Source

RNC

Source Field

pmDlTrafficVolumeSrb136

© Copyright IBM Corp. 2008, 2009. All Rights Reserved.

Source Section

UtranCell

pmDlTrafficVolumeSrb34

Payload traffic in the downlink for SRB 3.4 after macro diversity. Payload traffic includes both user data, and Medium Access Control (MAC) and Radio Link Control (RLC) header information. Retransmissions are also counted as part of the traffic volume.

Data Source

RNC

Source Field

pmDlTrafficVolumeSrb34

Source Section

UtranCell

pmDlUpswitchAttemptHigh

Number of attempted DL up-switches to bit-rates higher than 256 kbps (not including HS).

Data Source

RNC

Source Field

pmDlUpswitchAttemptHigh

Source Section

UtranCell

pmDlUpswitchAttemptHs

Number of DL upswitch attempts to any HS state.

Data Source

RNC

Source Field

pmDlUpswitchAttemptHs

Source Section

UtranCell

pmDlUpswitchAttemptLow

Number of attempted DL up-switches to bit-rates less than or equal to 64 kbps (not including up-switch to FACH from URA-PCH).

Data Source

RNC

Source Field

pmDlUpswitchAttemptLow

Source Section

UtranCell

pmDlUpswitchAttemptMedium

Number of attempted DL up-switches to bit-rates higher than 64 kbps and less than or equal to 256 kbps.

Data Source

RNC

Source Field

pmDlUpswitchAttemptMedium

Source Section

UtranCell

pmDlUpswitchSuccessHigh

Number of successful DL up-switches to bit-rates higher than 256 kbps (not including HS).

Data Source

RNC

Source Field

pmDlUpswitchSuccessHigh

© Copyright IBM Corp. 2008, 2009. All Rights Reserved.

Source Section

UtranCell

pmDlUpswitchSuccessHs

Number of successful DL upswitches to any HS state.

Data Source

RNC

Source Field

pmDlUpswitchSuccessHs

Source Section

UtranCell

pmDlUpswitchSuccessLow

Number of successful DL up-switches to bit-rates less than or equal to 64 kbps (not including up-switch to FACH from URA-PCH).

Data Source

RNC

Source Field

pmDlUpswitchSuccessLow

Source Section

UtranCell

pmDlUpswitchSuccessMedium

Number of successful DL up-switches to bit-rates higher than 64 kbps and less than or equal to 256 kbps.

Data Source

RNC

Source Field

pmDlUpswitchSuccessMedium

Source Section

UtranCell

pmDownSwitchAttempt

Number of channel downswitching attempts (UL or DL). The counter includes switches between dedicated channels as well as channel type switches (CELL_DCH to CELL_FACH and E-DCH/HSDPA to RACH/FACH).

Data Source

RNC

Source Field

pmDownSwitchAttempt

Source Section

UtranCell

pmDownSwitchSuccess

Number of successfull channel downswitches (UL or DL). The counter includes switches between dedicated channels as well as channel type switches (CELL_DCH to CELL_FACH and E-DCH/HSDPA to RACH/FACH).

Data Source

RNC

Source Field

pmDownSwitchSuccess

Source Section

UtranCell

pmEnableEulHhoAttempt

Number of attempted Hard Handovers to a coverage-related E-DCH cell. The counter is stepped in the best cell in the Active Set when the transition is triggered. The best cell is the cell with the highest measured quality defined by parameter UeMeasControl::hsQualityEstimate.

Data Source

RNC

© Copyright IBM Corp. 2008, 2009. All Rights Reserved.

Source Field

pmEnableEulHhoAttempt

Source Section

UtranCell

pmEnableHsHhoAttempt

Number of attempts to do a Hard HO to a coverage related cell, with the purpose to enable the possibility to do a transition to a HS-DSCH connection. The counter is stepped in the best cell in the Active Set when the transition is triggered.

Data Source

RNC

Source Field

pmEnableHsHhoAttempt

Source Section

UtranCell

pmEnableHsHhoSuccess

Number of successful attempts to do a Hard HO to a coverage related cell, with the purpose to enable the possibility to do a transition to a HS-DSCH connection. The counter is stepped in the best cell in the Active Set when the transition is triggered.

Data Source

RNC

Source Field

pmEnableHsHhoSuccess

Source Section

UtranCell

pmEulDowntimeAuto

Time in seconds that the Eul service in the cell has been unavailable because the system has considered the cell as down e.g. at least one of the MOs Eul, Hsdsch, UtranCell, Pch, Rach or Fach has been disabled while all these MOs have been unlocked.

Data Source

RNC

Source Field

pmEulDowntimeAuto

Source Section

Eul

pmEulDowntimeMan

Time in seconds that the Eul service in the cell has been unavailable due to operator setting e.g. the operator has locked at least one of the MOs Eul, Hsdsch, UtranCell, Pch, Rach or Fach.

Data Source

RNC

Source Field

pmEulDowntimeMan

Source Section

Eul

pmEulHarqTransmTti10Failure

Number of events when HARQ failure is indicated for the PS interactive RB and the SRBs when TTI = 10. The data shall be associated with the serving EUL cell.

Data Source

RNC

Source Field

pmEulHarqTransmTti10Failure

Source Section

UtranCell

pmEulHarqTransmTti10PsInteractive_01

Number of HARQ transmissions attempted for the PS interactive RB when TTI = 10 ms. If the signalled number of HARQ retransmissions is 13, 14 or 15, the PDF counter shall not be incremented. The data is associated with the serving EUL cell. Number of samples with x=1

© Copyright IBM Corp. 2008, 2009. All Rights Reserved.

Data Source

RNC

Source Field

pmEulHarqTransmTti10PsInteractive

Source Section

UtranCell

pmEulHarqTransmTti10PsInteractive_02

Number of HARQ transmissions attempted for the PS interactive RB when TTI = 10 ms. If the signalled number of HARQ retransmissions is 13, 14 or 15, the PDF counter shall not be incremented. The data is associated with the serving EUL cell. Number of samples with x=2

Data Source

RNC

Source Field

pmEulHarqTransmTti10PsInteractive

Source Section

UtranCell

pmEulHarqTransmTti10PsInteractive_03

Number of HARQ transmissions attempted for the PS interactive RB when TTI = 10 ms. If the signalled number of HARQ retransmissions is 13, 14 or 15, the PDF counter shall not be incremented. The data is associated with the serving EUL cell. Number of samples with x=3

Data Source

RNC

Source Field

pmEulHarqTransmTti10PsInteractive

Source Section

UtranCell

pmEulHarqTransmTti10PsInteractive_04

Number of HARQ transmissions attempted for the PS interactive RB when TTI = 10 ms. If the signalled number of HARQ retransmissions is 13, 14 or 15, the PDF counter shall not be incremented. The data is associated with the serving EUL cell. Number of samples with x>=4

Data Source

RNC

Source Field

pmEulHarqTransmTti10PsInteractive

Source Section

UtranCell

pmEulHarqTransmTti10PsRabs_00

Number of HARQ transmissions attempted for the PS RBs with TTI = 10 ms. Range: x=1

Data Source

RNC

Source Field

pmEulHarqTransmTti10PsRabs

Source Section

UtranCell

pmEulHarqTransmTti10PsRabs_01

Number of HARQ transmissions attempted for the PS RBs with TTI = 10 ms. Range: x=2

Data Source

RNC

Source Field

pmEulHarqTransmTti10PsRabs

Source Section

UtranCell

© Copyright IBM Corp. 2008, 2009. All Rights Reserved.

pmEulHarqTransmTti10PsRabs_02

Number of HARQ transmissions attempted for the PS RBs with TTI = 10 ms. Range: x=3

Data Source

RNC

Source Field

pmEulHarqTransmTti10PsRabs

Source Section

UtranCell

pmEulHarqTransmTti10PsRabs_03

Number of HARQ transmissions attempted for the PS RBs with TTI = 10 ms. Range: 4<=x<=12

Data Source

RNC

Source Field

pmEulHarqTransmTti10PsRabs

Source Section

UtranCell

pmEulHarqTransmTti10Srb_01

Number of HARQ transmissions attempted for the SRB's when TTI = 10 ms. If the signalled number of HARQ retransmissions is 13, 14 or 15, the PDF counter shall not be incremented. The data is associated with the serving EUL cell. Number of samples with x=1

Data Source

RNC

Source Field

pmEulHarqTransmTti10Srb

Source Section

UtranCell

pmEulHarqTransmTti10Srb_02

Number of HARQ transmissions attempted for the SRB's when TTI = 10 ms. If the signalled number of HARQ retransmissions is 13, 14 or 15, the PDF counter shall not be incremented. The data is associated with the serving EUL cell. Number of samples with x=2

Data Source

RNC

Source Field

pmEulHarqTransmTti10Srb

Source Section

UtranCell

pmEulHarqTransmTti10Srb_03

Number of HARQ transmissions attempted for the SRB's when TTI = 10 ms. If the signalled number of HARQ retransmissions is 13, 14 or 15, the PDF counter shall not be incremented. The data is associated with the serving EUL cell. Number of samples with x=3

Data Source

RNC

Source Field

pmEulHarqTransmTti10Srb

Source Section

UtranCell

pmEulHarqTransmTti10Srb_04

Number of HARQ transmissions attempted for the SRB's when TTI = 10 ms. If the signalled number of HARQ retransmissions is 13, 14 or 15, the PDF counter shall not be incremented. The data is associated with the serving EUL cell. Number of samples with x>=4

Data Source

RNC

Source Field

pmEulHarqTransmTti10Srb

© Copyright IBM Corp. 2008, 2009. All Rights Reserved.

Source Section

UtranCell

pmEulHarqTransmTti2Failure

Number of events when HARQ failure is indicated, for both the PS interactive RB and the SRBs, when TTI = 2 ms.

Data Source

RNC

Source Field

pmEulHarqTransmTti2Failure

Source Section

UtranCell

pmEulHarqTransmTti2PsRabs_1

Number of HARQ transmissions attempted for the PS interactive RB with TTI = 2 ms. Range: x=1

Data Source

RNC

Source Field

pmEulHarqTransmTti2PsRabs

Source Section

UtranCell

pmEulHarqTransmTti2PsRabs_2

Number of HARQ transmissions attempted for the PS interactive RB with TTI = 2 ms. Range: x=2

Data Source

RNC

Source Field

pmEulHarqTransmTti2PsRabs

Source Section

UtranCell

pmEulHarqTransmTti2PsRabs_3

Number of HARQ transmissions attempted for the PS interactive RB with TTI = 2 ms. Range: x=3

Data Source

RNC

Source Field

pmEulHarqTransmTti2PsRabs

Source Section

UtranCell

pmEulHarqTransmTti2PsRabs_4

Number of HARQ transmissions attempted for the PS interactive RB with TTI = 2 ms. Range: 4<=x<=12

Data Source

RNC

Source Field

pmEulHarqTransmTti2PsRabs

Source Section

UtranCell

pmEulHarqTransmTti2Srb_1

Number of HARQ transmissions attempted for the SRBs when TTI = 2 ms. Range: x=1

Data Source

RNC

Source Field

pmEulHarqTransmTti2Srb

© Copyright IBM Corp. 2008, 2009. All Rights Reserved.

Source Section

UtranCell

pmEulHarqTransmTti2Srb_2

Number of HARQ transmissions attempted for the SRBs when TTI = 2 ms. Range: x=2

Data Source

RNC

Source Field

pmEulHarqTransmTti2Srb

Source Section

UtranCell

pmEulHarqTransmTti2Srb_3

Number of HARQ transmissions attempted for the SRBs when TTI = 2 ms. Range: x=3

Data Source

RNC

Source Field

pmEulHarqTransmTti2Srb

Source Section

UtranCell

pmEulHarqTransmTti2Srb_4

Number of HARQ transmissions attempted for the SRBs when TTI = 2 ms. Range: 4<=x<=12

Data Source

RNC

Source Field

pmEulHarqTransmTti2Srb

Source Section

UtranCell

pmEulMacesPduTti10DelivPsInteractive

Number of MAC-es PDUs, corresponding to the PS interactive RB, which are delivered to the disassembly entity in MAC-es when TTI = 10 ms. The data shall be associated with the serving EUL cell.

Data Source

RNC

Source Field

pmEulMacesPduTti10DelivPsInteractive

Source Section

UtranCell

pmEulMacesPduTti10DelivPsRabs

Number of MAC-es PDUs, corresponding to the PS RBs with TTI = 10 ms, which have been delivered to MAC-d within the ROP by the MAC-es re-ordering function.

Data Source

RNC

Source Field

pmEulMacesPduTti10DelivPsRabs

Source Section

UtranCell

pmEulMacesPduTti10DelivSrb

Number of MAC-es PDUs, corresponding to the SRBs, which are delivered to the disassembly entities in MAC-es when TTI = 10 ms. The data shall be associated with the serving EUL cell.

Data Source

RNC

Source Field

pmEulMacesPduTti10DelivSrb

Source Section

UtranCell

© Copyright IBM Corp. 2008, 2009. All Rights Reserved.

pmEulMacesPduTti10UndelivPsInteractive

Number of MAC-es PDUs, corresponding to the PS interactive RB, which are undeliverable by MAC-es re-ordering, when TTI = 10 ms. The counter shall be incremented for each MAC-es PDU, which cannot be delivered. Undeliverable MAC-es PDUs are those that have not been received at expiry of timer RncFunction.t1eTimerUlTti10 and have a TSN smaller than the TSN that triggered the timer . The data shall be associated with the serving EUL cell.

Data Source

RNC

Source Field

pmEulMacesPduTti10UndelivPsInteractive

Source Section

UtranCell

pmEulMacesPduTti10UndelivSrb

Number of MAC-es PDUs, corresponding to the SRBs, which are undeliverable by MAC-es re-ordering when TTI = 10 ms. The counter shall be incremented for each MAC-es PDU, which cannot be delivered. Undeliverable MAC-es PDUs are those that have not been received at expiry of timer RncFunction.t1eTimerUlTti10 and have a TSN smaller than the TSN that triggered the timer . The data shall be associated with the serving EUL cell.

Data Source

RNC

Source Field

pmEulMacesPduTti10UndelivSrb

Source Section

UtranCell

pmEulMacesPduTti10UndvPsRabs

Number of MAC-es PDUs, corresponding to the PS RBs with TTI = 10 ms, which the MAC-es re-ordering function could not deliver within the ROP. A MAC-es PDU cannot be delivered if it has a TSN less than that of a PDU received earlier, unless it is received within the time defined in UeRcEdchFlow::t1eTimer.

Data Source

RNC

Source Field

pmEulMacesPduTti10UndelivPsRabs

Source Section

UtranCell

pmEulMacesPduTti2DelivPsRabs

Number of MAC-es PDUs, corresponding to the PS interactive RB, which are delivered to the disassembly entity in MAC-es when TTI = 2 ms.

Data Source

RNC

Source Field

pmEulMacesPduTti2DelivPsRabs

Source Section

UtranCell

pmEulMacesPduTti2DelivSrb

Number of MAC-es PDUs, corresponding to the SRBs, which are delivered to the disassembly entities in MAC-es when TTI = 2 ms. The data is associated with the serving EUL cell.

Data Source

RNC

Source Field

pmEulMacesPduTti2DelivSrb

Source Section

UtranCell

pmEulMacesPduTti2UndelivPsRabs

Number of MAC-es PDUs, corresponding to the PS interactive RB with TTI = 2 ms, which are undeliverable by MAC-es re-ordering.

Data Source

RNC

© Copyright IBM Corp. 2008, 2009. All Rights Reserved.

Source Field

pmEulMacesPduTti2UndelivPsRabs

Source Section

UtranCell

pmEulMacesPduTti2UndelivSrb

Number of MAC-es PDUs, corresponding to the SRBs with TTI = 2 ms, which are undeliverable by MAC-es re-ordering.

Data Source

RNC

Source Field

pmEulMacesPduTti2UndelivSrb

Source Section

UtranCell

pmEulRlcUserPacketThp_00

The EUL UL RLC throughput (user data), excluding retransmissions. Reported on the best cell in the active set.

Data Source

RNC

Source Field

pmEulRlcUserPacketThp

Source Section

Eul

pmEulRlcUserPacketThp_01

The EUL UL RLC throughput (user data), excluding retransmissions. Reported on the best cell in the active set.

Data Source

RNC

Source Field

pmEulRlcUserPacketThp

Source Section

Eul

pmEulRlcUserPacketThp_02

The EUL UL RLC throughput (user data), excluding retransmissions. Reported on the best cell in the active set.

Data Source

RNC

Source Field

pmEulRlcUserPacketThp

Source Section

Eul

pmEulRlcUserPacketThp_03

The EUL UL RLC throughput (user data), excluding retransmissions. Reported on the best cell in the active set.

Data Source

RNC

Source Field

pmEulRlcUserPacketThp

Source Section

Eul

pmEulRlcUserPacketThp_04

The EUL UL RLC throughput (user data), excluding retransmissions. Reported on the best cell in the active set.

Data Source

RNC

© Copyright IBM Corp. 2008, 2009. All Rights Reserved.

Source Field

pmEulRlcUserPacketThp

Source Section

Eul

pmEulRlcUserPacketThp_05

The EUL UL RLC throughput (user data), excluding retransmissions. Reported on the best cell in the active set.

Data Source

RNC

Source Field

pmEulRlcUserPacketThp

Source Section

Eul

pmEulRlcUserPacketThp_06

The EUL UL RLC throughput (user data), excluding retransmissions. Reported on the best cell in the active set.

Data Source

RNC

Source Field

pmEulRlcUserPacketThp

Source Section

Eul

pmEulRlcUserPacketThp_07

The EUL UL RLC throughput (user data), excluding retransmissions. Reported on the best cell in the active set.

Data Source

RNC

Source Field

pmEulRlcUserPacketThp

Source Section

Eul

pmEulRlcUserPacketThp_08

The EUL UL RLC throughput (user data), excluding retransmissions. Reported on the best cell in the active set.

Data Source

RNC

Source Field

pmEulRlcUserPacketThp

Source Section

Eul

pmEulRlcUserPacketThp_09

The EUL UL RLC throughput (user data), excluding retransmissions. Reported on the best cell in the active set.

Data Source

RNC

Source Field

pmEulRlcUserPacketThp

Source Section

Eul

pmEulRlcUserPacketThp_10

The EUL UL RLC throughput (user data), excluding retransmissions. Reported on the best cell in the active set.

Data Source

RNC

© Copyright IBM Corp. 2008, 2009. All Rights Reserved.

Source Field

pmEulRlcUserPacketThp

Source Section

Eul

pmEulRlcUserPacketThp_11

The EUL UL RLC throughput (user data), excluding retransmissions. Reported on the best cell in the active set.

Data Source

RNC

Source Field

pmEulRlcUserPacketThp

Source Section

Eul

pmEulRlcUserPacketThp_12

The EUL UL RLC throughput (user data), excluding retransmissions. Reported on the best cell in the active set.

Data Source

RNC

Source Field

pmEulRlcUserPacketThp

Source Section

Eul

pmEulRlcUserPacketThp_13

The EUL UL RLC throughput (user data), excluding retransmissions. Reported on the best cell in the active set.

Data Source

RNC

Source Field

pmEulRlcUserPacketThp

Source Section

Eul

pmEulRlcUserPacketThp_14

The EUL UL RLC throughput (user data), excluding retransmissions. Reported on the best cell in the active set.

Data Source

RNC

Source Field

pmEulRlcUserPacketThp

Source Section

Eul

pmEulRlcUserPacketThp_15

The EUL UL RLC throughput (user data), excluding retransmissions. Reported on the best cell in the active set.

Data Source

RNC

Source Field

pmEulRlcUserPacketThp

Source Section

Eul

pmEulRlcUserPacketThp_16

The EUL UL RLC throughput (user data), excluding retransmissions. Reported on the best cell in the active set.

Data Source

RNC

© Copyright IBM Corp. 2008, 2009. All Rights Reserved.

Source Field

pmEulRlcUserPacketThp

Source Section

Eul

pmEulRlcUserPacketThp_17

The EUL UL RLC throughput (user data), excluding retransmissions. Reported on the best cell in the active set.

Data Source

RNC

Source Field

pmEulRlcUserPacketThp

Source Section

Eul

pmEulRlcUserPacketThp_18

The EUL UL RLC throughput (user data), excluding retransmissions. Reported on the best cell in the active set.

Data Source

RNC

Source Field

pmEulRlcUserPacketThp

Source Section

Eul

pmEulToDchAttempt

Number of attempted channel switches from E-DCH to a lower capability channel, i.e. DCH/HS-DSCH or DCH/DCH. The counter is stepped in the best cell in the Active Set when the transition is triggered.

Data Source

RNC

Source Field

pmEulToDchAttempt

Source Section

UtranCell

pmEulToDchSuccess

Number of successful channel switches from E-DCH to a lower capability channel, i.e. DCH/HS-DSCH or DCH/DCH. The counter is stepped in the best cell in the Active Set when the transition is concluded.

Data Source

RNC

Source Field

pmEulToDchSuccess

Source Section

UtranCell

pmFailedChSwitch

(Removed in RP14.2)Number of failed channel switches CELL_FACH to CELL_DCH or CELL_DCH to CELL_FACH

Data Source

NodeB_RNC_RXI

Source Field

pmFailedChSwitch

Source Section

UtranCell

pmFailedDchChSwitch

(Retired on P6)Number of failed channel switches between DCHs

Data Source

NodeB_RNC_RXI

© Copyright IBM Corp. 2008, 2009. All Rights Reserved.

Source Field

pmFailedDchChSwitch

Source Section

UtranCell

pmFaultyTransportBlocksBcUl

Total number of faulty uplink DCH transport blocks before combining.

Data Source

NodeB_RNC_RXI

Source Field

pmFaultyTransportBlocksBcUl

Source Section

UtranCell

pmHsDlRlcUserPacketThp_00

The HS-DSCH DL RLC throughput (user data), excluding retransmissions. Reported on the HS-DSCH cell.

Data Source

RNC

Source Field

pmHsDlRlcUserPacketThp

Source Section

Hsdsch

pmHsDlRlcUserPacketThp_01

The HS-DSCH DL RLC throughput (user data), excluding retransmissions. Reported on the HS-DSCH cell.

Data Source

RNC

Source Field

pmHsDlRlcUserPacketThp

Source Section

Hsdsch

pmHsDlRlcUserPacketThp_02

The HS-DSCH DL RLC throughput (user data), excluding retransmissions. Reported on the HS-DSCH cell.

Data Source

RNC

Source Field

pmHsDlRlcUserPacketThp

Source Section

Hsdsch

pmHsDlRlcUserPacketThp_03

The HS-DSCH DL RLC throughput (user data), excluding retransmissions. Reported on the HS-DSCH cell.

Data Source

RNC

Source Field

pmHsDlRlcUserPacketThp

Source Section

Hsdsch

pmHsDlRlcUserPacketThp_04

The HS-DSCH DL RLC throughput (user data), excluding retransmissions. Reported on the HS-DSCH cell.

Data Source

RNC

© Copyright IBM Corp. 2008, 2009. All Rights Reserved.

Source Field

pmHsDlRlcUserPacketThp

Source Section

Hsdsch

pmHsDlRlcUserPacketThp_05

The HS-DSCH DL RLC throughput (user data), excluding retransmissions. Reported on the HS-DSCH cell.

Data Source

RNC

Source Field

pmHsDlRlcUserPacketThp

Source Section

Hsdsch

pmHsDlRlcUserPacketThp_06

The HS-DSCH DL RLC throughput (user data), excluding retransmissions. Reported on the HS-DSCH cell.

Data Source

RNC

Source Field

pmHsDlRlcUserPacketThp

Source Section

Hsdsch

pmHsDlRlcUserPacketThp_07

The HS-DSCH DL RLC throughput (user data), excluding retransmissions. Reported on the HS-DSCH cell.

Data Source

RNC

Source Field

pmHsDlRlcUserPacketThp

Source Section

Hsdsch

pmHsDlRlcUserPacketThp_08

The HS-DSCH DL RLC throughput (user data), excluding retransmissions. Reported on the HS-DSCH cell.

Data Source

RNC

Source Field

pmHsDlRlcUserPacketThp

Source Section

Hsdsch

pmHsDlRlcUserPacketThp_09

The HS-DSCH DL RLC throughput (user data), excluding retransmissions. Reported on the HS-DSCH cell.

Data Source

RNC

Source Field

pmHsDlRlcUserPacketThp

Source Section

Hsdsch

pmHsDlRlcUserPacketThp_10

The HS-DSCH DL RLC throughput (user data), excluding retransmissions. Reported on the HS-DSCH cell.

Data Source

RNC

© Copyright IBM Corp. 2008, 2009. All Rights Reserved.

Source Field

pmHsDlRlcUserPacketThp

Source Section

Hsdsch

pmHsDlRlcUserPacketThp_11

The HS-DSCH DL RLC throughput (user data), excluding retransmissions. Reported on the HS-DSCH cell.

Data Source

RNC

Source Field

pmHsDlRlcUserPacketThp

Source Section

Hsdsch

pmHsDlRlcUserPacketThp_12

The HS-DSCH DL RLC throughput (user data), excluding retransmissions. Reported on the HS-DSCH cell.

Data Source

RNC

Source Field

pmHsDlRlcUserPacketThp

Source Section

Hsdsch

pmHsDlRlcUserPacketThp_13

The HS-DSCH DL RLC throughput (user data), excluding retransmissions. Reported on the HS-DSCH cell.

Data Source

RNC

Source Field

pmHsDlRlcUserPacketThp

Source Section

Hsdsch

pmHsDlRlcUserPacketThp_14

The HS-DSCH DL RLC throughput (user data), excluding retransmissions. Reported on the HS-DSCH cell.

Data Source

RNC

Source Field

pmHsDlRlcUserPacketThp

Source Section

Hsdsch

pmHsDlRlcUserPacketThp_15

The HS-DSCH DL RLC throughput (user data), excluding retransmissions. Reported on the HS-DSCH cell.

Data Source

RNC

Source Field

pmHsDlRlcUserPacketThp

Source Section

Hsdsch

pmHsDlRlcUserPacketThp_16

The HS-DSCH DL RLC throughput (user data), excluding retransmissions. Reported on the HS-DSCH cell.

Data Source

RNC

© Copyright IBM Corp. 2008, 2009. All Rights Reserved.

Source Field

pmHsDlRlcUserPacketThp

Source Section

Hsdsch

pmHsDlRlcUserPacketThp_17

The HS-DSCH DL RLC throughput (user data), excluding retransmissions. Reported on the HS-DSCH cell.

Data Source

RNC

Source Field

pmHsDlRlcUserPacketThp

Source Section

Hsdsch

pmHsDlRlcUserPacketThp_18

The HS-DSCH DL RLC throughput (user data), excluding retransmissions. Reported on the HS-DSCH cell.

Data Source

RNC

Source Field

pmHsDlRlcUserPacketThp

Source Section

Hsdsch

pmHsDlRlcUserPacketThp_19

The HS-DSCH DL RLC throughput (user data), excluding retransmissions. Reported on the HS-DSCH cell.

Data Source

RNC

Source Field

pmHsDlRlcUserPacketThp

Source Section

Hsdsch

pmHsDlRlcUserPacketThp_20

The HS-DSCH DL RLC throughput (user data), excluding retransmissions. Reported on the HS-DSCH cell.

Data Source

RNC

Source Field

pmHsDlRlcUserPacketThp

Source Section

Hsdsch

pmHsDlRlcUserPacketThp_21

The HS-DSCH DL RLC throughput (user data), excluding retransmissions. Reported on the HS-DSCH cell.

Data Source

RNC

Source Field

pmHsDlRlcUserPacketThp

Source Section

Hsdsch

pmHsDlRlcUserPacketThp_22

The HS-DSCH DL RLC throughput (user data), excluding retransmissions. Reported on the HS-DSCH cell.

Data Source

RNC

© Copyright IBM Corp. 2008, 2009. All Rights Reserved.

Source Field

pmHsDlRlcUserPacketThp

Source Section

Hsdsch

pmHsDlRlcUserPacketThp_23

The HS-DSCH DL RLC throughput (user data), excluding retransmissions. Reported on the HS-DSCH cell.

Data Source

RNC

Source Field

pmHsDlRlcUserPacketThp

Source Section

Hsdsch

pmHsDlRlcUserPacketThp_24

The HS-DSCH DL RLC throughput (user data), excluding retransmissions. Reported on the HS-DSCH cell.

Data Source

RNC

Source Field

pmHsDlRlcUserPacketThp

Source Section

Hsdsch

pmHsDlRlcUserPacketThp_25

The HS-DSCH DL RLC throughput (user data), excluding retransmissions. Reported on the HS-DSCH cell.

Data Source

RNC

Source Field

pmHsDlRlcUserPacketThp

Source Section

Hsdsch

pmHsDlRlcUserPacketThp_26

The HS-DSCH DL RLC throughput (user data), excluding retransmissions. Reported on the HS-DSCH cell.

Data Source

RNC

Source Field

pmHsDlRlcUserPacketThp

Source Section

Hsdsch

pmHsDlRlcUserPacketThp_27

The HS-DSCH DL RLC throughput (user data), excluding retransmissions. Reported on the HS-DSCH cell.

Data Source

RNC

Source Field

pmHsDlRlcUserPacketThp

Source Section

Hsdsch

pmHsDlRlcUserPacketThp_28

The HS-DSCH DL RLC throughput (user data), excluding retransmissions. Reported on the HS-DSCH cell.

Data Source

RNC

© Copyright IBM Corp. 2008, 2009. All Rights Reserved.

Source Field

pmHsDlRlcUserPacketThp

Source Section

Hsdsch

pmHsDlRlcUserPacketThp_29

The HS-DSCH DL RLC throughput (user data), excluding retransmissions. Reported on the HS-DSCH cell.

Data Source

RNC

Source Field

pmHsDlRlcUserPacketThp

Source Section

Hsdsch

pmHsDowntimeAuto

Amount of time the Hsdsch service in the cell is unavailable due to that the system has considered the cell as down e.g. at least one of the MOs Hsdsch, UtranCell, Pch, Rach or Fach is disabled while all are unlocked.

Data Source

RNC

Source Field

pmHsDowntimeAuto

Source Section

Hsdsch

pmHsDowntimeMan

Amount of time the Hsdsch service in the cell is unavailable due to operation setting e.g. the operator has locked at least one of the MOs Hsdsch, UtranCell, Pch, Rach or Fach.

Data Source

RNC

Source Field

pmHsDowntimeMan

Source Section

Hsdsch

pmHsdschOverloadDetection

Counts the number of times HS-DSCH Overload Control is detected.

Data Source

RNC

Source Field

pmHsdschOverloadDetection

Source Section

UtranCell

pmHsToDchAttempt

Number of attempts to reconfigure a connection using a HS-DSCH to a DCH connection. The counter is stepped in the best cell in the Active Set when the transition is triggered.

Data Source

RNC

Source Field

pmHsToDchAttempt

Source Section

UtranCell

pmHsToDchSuccess

Number of successful reconfigurations of a connection using a HS-DSCH to a DCH connection. The counter is stepped in the best cell in the Active Set when the transition is triggered.

Data Source

RNC

© Copyright IBM Corp. 2008, 2009. All Rights Reserved.

Source Field

pmHsToDchSuccess

Source Section

UtranCell

pmInactivityHsIdle

The number of signalling connection releases triggered for PS Interactive RAB mapped on HS-DSCH due to inactivity.- Retired fr 5.0.11.0.0

Data Source

RNC

Source Field

pmInactivityHsIdle

Source Section

UtranCell

pmInactivityMultiPsInt

Number of released PS RAB due to inactivity of one or more PS interactive RABs in the multi PS interactive RB combination.

Data Source

RNC

Source Field

pmInactivityMultiPsInt

Source Section

UtranCell

pmInactivityPsStreamIdle

Number UTRAN initiated RAB releases due to user inactivity per best cell.

Data Source

RNC

Source Field

pmInactivityPsStreamIdle

Source Section

UtranCell

pmInterFreqMeasCmStart

Number of inter-frequency measurements started with compressed mode

Data Source

NodeB_RNC_RXI

Source Field

pmInterFreqMeasCmStart

Source Section

UtranCell

pmInterFreqMeasCmStop

Number of inter-frequency measurements stops with compressed mode

Data Source

NodeB_RNC_RXI

Source Field

pmInterFreqMeasCmStop

Source Section

UtranCell

pmInterFreqMeasNoCmStart

Number of inter-frequency measurements started without compressed mode

Data Source

NodeB_RNC_RXI

Source Field

pmInterFreqMeasNoCmStart

© Copyright IBM Corp. 2008, 2009. All Rights Reserved.

Source Section

UtranCell

pmInterFreqMeasNoCmStop

Number of inter-frequency measurements stops without compressed mode

Data Source

NodeB_RNC_RXI

Source Field

pmInterFreqMeasNoCmStop

Source Section

UtranCell

pmIratHoGsmMeasCmStart

GSM measurement start with compressed mode

Data Source

NodeB_RNC_RXI

Source Field

pmIratHoGsmMeasCmStart

Source Section

UtranCell

pmIratHoGsmMeasNoCmStart

GSM measurement starts (without use of compressed mode)

Data Source

NodeB_RNC_RXI

Source Field

pmIratHoGsmMeasNoCmStart

Source Section

UtranCell

pmNoAttOutIratHoCs57_RUP

Number of attempted outgoing (to GSM) inter-RAT handover for 'streaming 57.6 kbps CS RAB' for the best cell in the active set (roll up from GsmRelation)

Data Source

NodeB_RNC_RXI

Source Field

pmNoAttOutIratHoCs57

Source Section

GsmRelation

pmNoAttOutIratHoMulti_RUP

Number of attempted outgoing (to GSM) inter-RAT handover for 'multi RAB' for the best cell in the active set (roll up from GsmRelation)

Data Source

NodeB_RNC_RXI

Source Field

pmNoAttOutIratHoMulti

Source Section

GsmRelation

pmNoAttOutIratHoSpeech_RUP

Number of attempted outgoing (to GSM) inter-RAT handover for 'Conversational speech RAB' for the best cell in the active set (roll up from GsmRelation)

Data Source

NodeB_RNC_RXI

Source Field

pmNoAttOutIratHoSpeech

Source Section

GsmRelation

© Copyright IBM Corp. 2008, 2009. All Rights Reserved.

pmNoAttOutIratHoStandalone_RUP

Number of attempted outgoing (to GSM) inter-RAT handover for 'Standalone signalling connection' for the best cell in the active set (roll up from GsmRelation)

Data Source

NodeB_RNC_RXI

Source Field

pmNoAttOutIratHoStandalone

Source Section

GsmRelation

pmNoAttOutSbHoSpeech_RUP

Number of attempted outgoing Service Based GSM Handover for 'Conversational speech RAB' for the best cell in the active set. (roll up from GsmRelation)

Data Source

RNC

Source Field

pmNoAttOutSbHoSpeech

Source Section

GsmRelation_to_UtranCell

pmNoCellDchDisconnectAbnorm

Number of abnormal disconnections from dedicated channels that is CELL_DCH state

Data Source

NodeB_RNC_RXI

Source Field

pmNoCellDchDisconnectAbnorm

Source Section

UtranCell

pmNoCellDchDisconnectNormal

Number of normal disconnections from dedicated channels that is CELL_DCH state.

Data Source

NodeB_RNC_RXI

Source Field

pmNoCellDchDisconnectNormal

Source Section

UtranCell

pmNoCellFachDisconnectAbnorm

Number of abnormal disconnections from common channels that is CELL_FACH state.

Data Source

NodeB_RNC_RXI

Source Field

pmNoCellFachDisconnectAbnorm

Source Section

UtranCell

pmNoCellFachDisconnectNormal

Number of normal disconnections from common channels that is CELL_FACH state.

Data Source

NodeB_RNC_RXI

Source Field

pmNoCellFachDisconnectNormal

Source Section

UtranCell

pmNoCellUpdAttempt

Total Number of attempted cell update procedures (periodic and cell reselection).

© Copyright IBM Corp. 2008, 2009. All Rights Reserved.

Data Source

NodeB_RNC_RXI

Source Field

pmNoCellUpdAttempt

Source Section

UtranCell

pmNoCellUpdSuccess

Total number of successful cell updates (periodic and cell reselection).

Data Source

NodeB_RNC_RXI

Source Field

pmNoCellUpdSuccess

Source Section

UtranCell

pmNoCs64DchDiscAbnorm

Number of abnormal disconnects of a conversational 64 kbps call for the best cell in the active set

Data Source

NodeB_RNC_RXI

Source Field

pmNoCs64DchDiscAbnorm

Source Section

UtranCell

pmNoCs64DchDiscNormal

Number of normal disconnects of a conversational 64 kbps call for the best cell in the active set

Data Source

NodeB_RNC_RXI

Source Field

pmNoCs64DchDiscNormal

Source Section

UtranCell

pmNoCsStreamDchDiscAbnorm

Number of abnormal disconnects of a streaming 57.6 kbps call for the best cell in the active set

Data Source

NodeB_RNC_RXI

Source Field

pmNoCsStreamDchDiscAbnorm

Source Section

UtranCell

pmNoCsStreamDchDiscNormal

Number of normal disconnects of a streaming 57.6 kbps call for the best cell in the active set

Data Source

NodeB_RNC_RXI

Source Field

pmNoCsStreamDchDiscNormal

Source Section

UtranCell

pmNoDirRetryAtt

Number of attempted outgoing inter RAT handover to GSM due to capacity reasons.

Data Source

NodeB_RNC_RXI

© Copyright IBM Corp. 2008, 2009. All Rights Reserved.

Source Field

pmNoDirRetryAtt

Source Section

UtranCell

pmNoDirRetrySuccess

Number of successful outgoing inter RAT handover to GSM due to capacity reasons.

Data Source

NodeB_RNC_RXI

Source Field

pmNoDirRetrySuccess

Source Section

UtranCell

pmNoDiscardedBmcCbsMsgs

Number of discarded BMC CBS Messages.

Data Source

RNC

Source Field

pmNoDiscardedBmcCbsMsgs

Source Section

UtranCell

pmNoDiscardedCbsMsgOrders

Number of discarded CBS message orders.

Data Source

RNC

Source Field

pmNoDiscardedCbsMsgOrders

Source Section

UtranCell

pmNoDiscardSduDtchHs

The total number of discarded Packet Interactive HS DTCH RLC SDUs.

Data Source

RNC

Source Field

pmNoDiscardSduDtchHs

Source Section

Hsdsch

pmNoDiscardSduDtchHsPsStream

Total number of discarded SDUs on a HS DTCH for a PS Streaming RB.

Data Source

RNC

Source Field

pmNoDiscardSduDtchHsPsStream

Source Section

UtranCell

pmNoDlChCodeAllocAltCodeCm

Number of allocations with alternative scrambling code for compressed mode

Data Source

NodeB_RNC_RXI

Source Field

pmNoDlChCodeAllocAltCodeCm

Source Section

UtranCell

© Copyright IBM Corp. 2008, 2009. All Rights Reserved.

pmNoDlChCodeAllocAttemptCm

Number of attempted DL channelization code allocations for compressed mode (within norm or alt scrambling code)

Data Source

NodeB_RNC_RXI

Source Field

pmNoDlChCodeAllocAttemptCm

Source Section

UtranCell

pmNoDlChCodeAllocAttemptSf128

Number attempted DL Chanization code alloc spread factor 128 normal trans mode.- Retired fr 5.0.11.0.0

Data Source

NodeB_RNC_RXI

Source Field

pmNoDlChCodeAllocAttemptSf128

Source Section

UtranCell

pmNoDlChCodeAllocAttemptSf16

Number of attempted DL channelization code allocations for 16 and normal transmission mode- Retired fr 5.0.11.0.0

Data Source

NodeB_RNC_RXI

Source Field

pmNoDlChCodeAllocAttemptSf16

Source Section

UtranCell

pmNoDlChCodeAllocAttemptSf256

Number attempted DL Chanization code alloc spreading factor 256 normal trans mode.- Retired fr 5.0.11.0.0

Data Source

NodeB_RNC_RXI

Source Field

pmNoDlChCodeAllocAttemptSf256

Source Section

UtranCell

pmNoDlChCodeAllocAttemptSf32

Number attempted DL Chanization code alloc spreading factor 32 normal trans mode- Retired fr 5.0.11.0.0

Data Source

NodeB_RNC_RXI

Source Field

pmNoDlChCodeAllocAttemptSf32

Source Section

UtranCell

pmNoDlChCodeAllocAttemptSf64

Number of attempted DL channelization code allocations for spreading factor 64 and normal transmission mode- Retired fr 5.0.11.0.0

Data Source

NodeB_RNC_RXI

Source Field

pmNoDlChCodeAllocAttemptSf64

Source Section

UtranCell

© Copyright IBM Corp. 2008, 2009. All Rights Reserved.

pmNoDlChCodeAllocAttemptSf8

Number of attempted DL Chanization code alloc spreading factor 8 normal trans mode.- Retired fr 5.0.11.0.0

Data Source

NodeB_RNC_RXI

Source Field

pmNoDlChCodeAllocAttemptSf8

Source Section

UtranCell

pmNoDlChCodeAllocFailureSf128

Number fail DL Chaniza code alloc attem for spread factor 128 normal trans mode- Retired fr 5.0.11.0.0

Data Source

NodeB_RNC_RXI

Source Field

pmNoDlChCodeAllocFailureSf128

Source Section

UtranCell

pmNoDlChCodeAllocFailureSf16

Number of failed DL channelization code allocation attempts for spreading factor 16 and normal transmission mode- Retired fr 5.0.11.0.0

Data Source

NodeB_RNC_RXI

Source Field

pmNoDlChCodeAllocFailureSf16

Source Section

UtranCell

pmNoDlChCodeAllocFailureSf256

Number fail DL Chanization code alloca attem spread factor spreading factor 256 normal trans mode- Retired fr 5.0.11.0.0

Data Source

NodeB_RNC_RXI

Source Field

pmNoDlChCodeAllocFailureSf256

Source Section

UtranCell

pmNoDlChCodeAllocFailureSf32

Number fail DL Chanization code alloc attem spread factor 32 normal trans mode.- Retired fr 5.0.11.0.0

Data Source

NodeB_RNC_RXI

Source Field

pmNoDlChCodeAllocFailureSf32

Source Section

UtranCell

pmNoDlChCodeAllocFailureSf64

Number of failed DL channelization code allocation attempts for spreading factor 64 and normal transmission mode- Retired fr 5.0.11.0.0

Data Source

NodeB_RNC_RXI

Source Field

pmNoDlChCodeAllocFailureSf64

Source Section

UtranCell

© Copyright IBM Corp. 2008, 2009. All Rights Reserved.

pmNoDlChCodeAllocFailureSf8

Number fail DL Chanization code alloc attem spread factor 8 normal trans mode.- Retired fr 5.0.11.0.0

Data Source

NodeB_RNC_RXI

Source Field

pmNoDlChCodeAllocFailureSf8

Source Section

UtranCell

pmNoDscSduDtchDlPsStream

Total number of discarded SDUs on a DTCH in the downlink direction for a PS Streaming RB. Measured only in SRNC, on the best cell in the active set.

Data Source

RNC

Source Field

pmNoDiscardSduDtchDlPsStreaming

Source Section

UtranCell

pmNoEulCcAttempt

Number of attempted Serving E-DCH Cell Changes. The counter is incremented in the target cell.

Data Source

RNC

Source Field

pmNoEulCcAttempt

Source Section

UtranCell

pmNoEulCcSuccess

Number of successful Serving E-DCH Cell Changes. The counter is incremented in the target cell.

Data Source

RNC

Source Field

pmNoEulCcSuccess

Source Section

UtranCell

pmNoEulHardHoReturnOldChSource

Number of failed Hard HO for serving E-DCH cell selection and UE maintained. The counter is stepped in the best cell in the Active Set when the transition is triggered. The best cell is the cell with the highest measured quality defined by parameter UeMeasControl::hsQualityEstimate.

Data Source

RNC

Source Field

pmNoEulHardHoReturnOldChSource

Source Section

UtranCell

pmNoEulHardHoReturnOldChTarget

Number of failed Hard HO for serving E-DCH cell selection and UE maintained. The counter is stepped in the target cell

Data Source

RNC

Source Field

pmNoEulHardHoReturnOldChTarget

Source Section

UtranCell

© Copyright IBM Corp. 2008, 2009. All Rights Reserved.

pmNoFailedAfterAdm

Number of RRC estab req & RAB estab req fail after being adm both serv & drift UEs

Data Source

NodeB_RNC_RXI

Source Field

pmNoFailedAfterAdm

Source Section

UtranCell

pmNoFailedRabEstAttemptExceedConnLimit

Number of failed PS RAB establishment attempts due to exceeding the configured connection limit when allocating Spreading Factor ('SF Histogram' in Admission Reject signal)

Data Source

RNC

Source Field

pmNoFailedRabEstAttemptExceedConnLimit

Source Section

UtranCell

pmNoFailedRabEstAttemptLackDlAse

Number of failed RAB establishment attempts due to lack of DL ASE

Data Source

RNC

Source Field

pmNoFailedRabEstAttemptLackDlAse

Source Section

UtranCell

pmNoFailedRabEstAttemptLackDlChnlCode

Number of failed RAB establishment attempts due to lack of DL channelization codes

Data Source

RNC

Source Field

pmNoFailedRabEstAttemptLackDlChnlCode

Source Section

UtranCell

pmNoFailedRabEstAttemptLackDlHw

Number of failed RAB establishment attempts due to lack of DL hardware resources.

Data Source

RNC

Source Field

pmNoFailedRabEstAttemptLackDlHw

Source Section

UtranCell

pmNoFailedRabEstAttemptLackDlHwBest

Number of failed RAB establishment attempts due to lack of DL hardware resources, for the best cell in the active set.

Data Source

RNC

Source Field

pmNoFailedRabEstAttemptLackDlHwBest

Source Section

UtranCell

© Copyright IBM Corp. 2008, 2009. All Rights Reserved.

pmNoFailedRabEstAttemptLackDlPwr

Number of failed RAB establishment attempts due to lack of DL power

Data Source

RNC

Source Field

pmNoFailedRabEstAttemptLackDlPwr

Source Section

UtranCell

pmNoFailedRabEstAttemptLackUlAse

Number of failed RAB establishment attempts due to lack of UL Air interface Speech Equivalent(ASE)

Data Source

RNC

Source Field

pmNoFailedRabEstAttemptLackUlAse

Source Section

UtranCell

pmNoFailedRabEstAttemptLackUlHw

Number of failed RAB establishment attempts due to lack of UL hardware resources.

Data Source

RNC

Source Field

pmNoFailedRabEstAttemptLackUlHw

Source Section

UtranCell

pmNoFailedRabEstAttemptLackUlHwBest

Number of failed RAB establishment attempts due to lack of UL hardware resources, for the best cell in the active set.

Data Source

RNC

Source Field

pmNoFailedRabEstAttemptLackUlHwBest

Source Section

UtranCell

pmNoFailedRrcConnectReqCsHw

Number of CS calls denied by admission control due to insufficient licensed capacity in the RBS.

Data Source

RNC

Source Field

pmNoFailedRrcConnectReqCsHw

Source Section

UtranCell

pmNoFailedRrcConnectReqHw

Number of RRC requests denied by admission control due to insufficient licensed capacity in the RBS.

Data Source

RNC

Source Field

pmNoFailedRrcConnectReqHw

Source Section

UtranCell

© Copyright IBM Corp. 2008, 2009. All Rights Reserved.

pmNoFailedRrcConnectReqPsHw

Number of PS calls denied by admission control due to insufficient licensed capacity in the RBS.

Data Source

RNC

Source Field

pmNoFailedRrcConnectReqPsHw

Source Section

UtranCell

pmNoFailOutIratHoCs57GsmFailure_RUP

Number of failed outgoing (to GSM) inter-RAT handover due to GSM resource allocation failure, for 'streaming 57.6 kbps CS RAB' for the best cell in the active set. (roll up from GsmRelation)

Data Source

RNC

Source Field

pmNoFailOutIratHoCs57GsmFailure

Source Section

GsmRelation_to_UtranCell

pmNoFailOutIratHoCs57ReturnOldChNotPhyChFail_RUP

Number of failed outgoing (to GSM) inter-RAT handover due to reasons other than physical channel failure, where the UE fails to return to the present Active Set for 'streaming 57.6 kbps CS RAB' for the best cell in the active set. (roll up from GsmRelation)

Data Source

RNC

Source Field

pmNoFailOutIratHoCs57ReturnOldChNotPhyChFail

Source Section

GsmRelation_to_UtranCell

pmNoFailOutIratHoCs57ReturnOldChPhyChFail_RUP

Number of failed outgoing (to GSM) inter-RAT handover due to physical channel failure, where the UE returns to the present Active Set for 'streaming 57.6 kbps CS RAB' for the best cell in the active set. (roll up from GsmRelation)

Data Source

RNC

Source Field

pmNoFailOutIratHoCs57ReturnOldChPhyChFail

Source Section

GsmRelation_to_UtranCell

pmNoFailOutIratHoCs57UeRejection_RUP

Number of failed outgoing (to GSM) inter-RAT handover, rejected by UE, for 'streaming 57.6 kbps CS RAB' for the best cell in the active set. (roll up from GsmRelation)

Data Source

RNC

Source Field

pmNoFailOutIratHoCs57UeRejection

Source Section

GsmRelation_to_UtranCell

pmNoFailOutIratHoMultiGsmFailure_RUP

Number of failed outgoing (to GSM) inter-RAT handover due to GSM resource allocation failure, for 'multi RAB' for the best cell in the active set. (roll up from GsmRelation)

Data Source

RNC

Source Field

pmNoFailOutIratHoMultiGsmFailure

© Copyright IBM Corp. 2008, 2009. All Rights Reserved.

Source Section

GsmRelation_to_UtranCell

pmNoFailOutIratHoMultiReturnOldChNotPhyChFail_RUP

Number of failed outgoing (to GSM) inter-RAT handover due to reasons other than physical channel failure, where the UE fails to return to the present Active Set for 'multi RAB' for the best cell in the active set. (roll up from GsmRelation)

Data Source

RNC

Source Field

pmNoFailOutIratHoMultiReturnOldChNotPhyChFail

Source Section

GsmRelation_to_UtranCell

pmNoFailOutIratHoMultiReturnOldChPhyChFail_RUP

Number of failed outgoing (to GSM) inter-RAT handover due to physical channel failure, where the UE returns to the present Active Set for 'multi RAB' for the best cell in the active set. (roll up from GsmRelation)

Data Source

RNC

Source Field

pmNoFailOutIratHoMultiReturnOldChPhyChFail

Source Section

GsmRelation_to_UtranCell

pmNoFailOutIratHoMultiUeRejection_RUP

Number of failed outgoing (to GSM) inter-RAT handover, rejected by UE, for 'multi RAB' for the best cell in the active set.(roll up from GSMRelation entity) (roll up from GsmRelation)

Data Source

RNC

Source Field

pmNoFailOutIratHoMultiUeRejection

Source Section

GsmRelation_to_UtranCell

pmNoFailOutIratHoSpeechGsmFailure_RUP

Number of failed outgoing (to GSM) inter-RAT handover due to GSM resource allocation failure, for 'Conversational speech RAB' for the best cell in the active set (roll up from GsmRelation)

Data Source

RNC

Source Field

pmNoFailOutIratHoSpeechGsmFailure

Source Section

GsmRelation_to_UtranCell

pmNoFailOutIratHoSpeechReturnOldChNotPhyChFail_RUP

Number of failed outgoing (to GSM) inter-RAT handover due to reasons other than physical channel failure, where the UE fails to return to the present Active Set for 'Conversational speech RAB' for the best cell in the active set.(roll up from GSMRelation entity) (roll up from GsmRelation)

Data Source

RNC

Source Field

pmNoFailOutIratHoSpeechReturnOldChNotPhyChFail

Source Section

GsmRelation_to_UtranCell

pmNoFailOutIratHoSpeechReturnOldChPhyChFail_RUP

Number of failed outgoing (to GSM) inter-RAT handover due to physical channel failure, where the UE returns to the present Active Set for 'Conversational speech RAB' for the best cell in the active set.(roll up from GSMRelation entity) (roll up from GsmRelation)

© Copyright IBM Corp. 2008, 2009. All Rights Reserved.

Data Source

RNC

Source Field

pmNoFailOutIratHoSpeechReturnOldChPhyChFail

Source Section

GsmRelation_to_UtranCell

pmNoFailOutIratHoSpeechUeRejection_RUP

Number of failed outgoing (to GSM) inter-RAT handover, rejected by UE, for 'Conversational speech RAB' for the best cell in the active set.(roll up from GSMRelation entity) (roll up from GsmRelation)

Data Source

RNC

Source Field

pmNoFailOutIratHoSpeechUeRejection

Source Section

GsmRelation_to_UtranCell

pmNoFailOutIratHoStandaloneGsmFailure_RUP

Number of failed outgoing (to GSM) inter-RAT handover due to GSM resource allocation failure, for 'Standalone signalling connection' for the best cell in the active set.(roll up from GSMRelation entity) (roll up from GsmRelation)

Data Source

RNC

Source Field

pmNoFailOutIratHoStandaloneGsmFailure

Source Section

GsmRelation_to_UtranCell

pmNoFailOutIratHoStandaloneReturnOldChNotPhyChFail_RUP

Number of failed outgoing (to GSM) inter-RAT handover due to reasons other than physical channel failure, where the UE fails to return to the present Active Set for 'Standalone signalling connection' for the best cell in the active set.(roll up from GSMRelation entity) (roll up from GsmRelation)

Data Source

RNC

Source Field

pmNoFailOutIratHoStandaloneReturnOldChNotPhyChFail

Source Section

GsmRelation_to_UtranCell

pmNoFailOutIratHoStandaloneUeRejection_RUP

Number of failed outgoing (to GSM) inter-RAT handover, rejected by UE, for 'Standalone signalling connection' for the best cell in the active set.(roll up from GsmRelation)

Data Source

RNC

Source Field

pmNoFailOutIratHoStandaloneUeRejection

Source Section

GsmRelation_to_UtranCell

pmNoFailOutSbHoSpeechGsmFailure_RUP

Number of failed outgoing Service Based GSM Handover due to GSM resource allocation failure, for 'Conversational speech RAB' for the best cell in the active set.(roll up from GsmRelation)

Data Source

RNC

Source Field

pmNoFailOutSbHoSpeechGsmFailure

© Copyright IBM Corp. 2008, 2009. All Rights Reserved.

Source Section

GsmRelation_to_UtranCell

pmNoFailOutSbHoSpeechReturnOldChNotPhyChFail_RUP

Number of failed outgoing Service Based GSM Handover due to reasons other than physical channel failure, where the UE returns to the present Active Set for 'Conversational speech RAB' for the best cell in the active set.(roll up from GsmRelation)

Data Source

RNC

Source Field

pmNoFailOutSbHoSpeechReturnOldChNotPhyChFail

Source Section

GsmRelation_to_UtranCell

pmNoFailOutSbHoSpeechReturnOldChPhyChFail_RUP

Number of failed outgoing Service Based GSM Handover due to physical channel failure, where the UE returns to the present Active Set for 'Conversational speech RAB' for the best cell in the active set.(roll up from GsmRelation)

Data Source

RNC

Source Field

pmNoFailOutSbHoSpeechReturnOldChPhyChFail

Source Section

GsmRelation_to_UtranCell

pmNoFailOutSbHoSpeechUeRejection_RUP

Number of failed outgoing Service Based GSM Handover, rejected by UE, for 'Conversational speech RAB' for the best cell in the active set.(roll up from GsmRelation)

Data Source

RNC

Source Field

pmNoFailOutSbHoSpeechUeRejection

Source Section

GsmRelation_to_UtranCell

pmNoHsCcAttempt

Number of attempted Serving HS-DSCH Cell change.

Data Source

RNC

Source Field

pmNoHsCcAttempt

Source Section

UtranCell

pmNoHsCcSuccess

Number of successful Serving HS-DSCH Cell change.

Data Source

RNC

Source Field

pmNoHsCcSuccess

Source Section

UtranCell

pmNoHsHardHoReturnOldChSource

Number of failed Hard HO for serving HS-DSCH cell selection and UE connection maintained. Source cell

Data Source

RNC

© Copyright IBM Corp. 2008, 2009. All Rights Reserved.

Source Field

pmNoHsHardHoReturnOldChSource

Source Section

UtranCell

pmNoHsHardHoReturnOldChTarget

Number of failed Hard HO for serving HS-DSCH cell selection and UE connection maintained. Target Cell

Data Source

RNC

Source Field

pmNoHsHardHoReturnOldChTarget

Source Section

UtranCell

pmNoIncomingEulHardHoAttempt

Number of attempted incoming Hard HO for serving E-DCH cell selection. The counter is stepped in the target cell.

Data Source

RNC

Source Field

pmNoIncomingEulHardHoAttempt

Source Section

UtranCell

pmNoIncomingEulHardHoSuccess

Number of successful incoming Hard HO for serving E-DCH cell selection. The counter is stepped in the target cell.

Data Source

RNC

Source Field

pmNoIncomingEulHardHoSuccess

Source Section

UtranCell

pmNoIncomingHsHardHoAttempt

Number of attempted Hard HO for serving HS-DSCH cell selection. Target cell

Data Source

RNC

Source Field

pmNoIncomingHsHardHoAttempt

Source Section

UtranCell

pmNoIncomingHsHardHoSuccess

Number of successful Hard HO for serving HS-DSCH cell selection. Target cell

Data Source

RNC

Source Field

pmNoIncomingHsHardHoSuccess

Source Section

UtranCell

pmNoIncomingPsStrHsHhoAtt

Number of attempted Hard HO for serving HS-DSCH cell selection for PS Streaming. Target cell.

Data Source

RNC

© Copyright IBM Corp. 2008, 2009. All Rights Reserved.

Source Field

pmNoIncomingPsStreamHsHhoAttempt

Source Section

UtranCell

pmNoIncomingPsStrHsHhoSucc

Number of successful Hard HO for serving HS-DSCH cell selection for PS Streaming. Target cell.

Data Source

RNC

Source Field

pmNoIncomingPsStreamHsHhoSuccess

Source Section

UtranCell

pmNoInCsIratHoAdmFail

Number of CS incoming Inter System Handovers that failes due to admission blocking in Utran.

Data Source

NodeB_RNC_RXI

Source Field

pmNoInCsIratHoAdmFail

Source Section

UtranCell

pmNoInCsIratHoAtt

Number attempted CS incoming Inter-System HO

Data Source

NodeB_RNC_RXI

Source Field

pmNoInCsIratHoAtt

Source Section

UtranCell

pmNoInCsIratHoSuccess

Number of successful CS incoming Inter-System handovers.

Data Source

NodeB_RNC_RXI

Source Field

pmNoInCsIratHoSuccess

Source Section

UtranCell

pmNoLoadSharingRrcConn

Number of Load Sharing diversions when establishing an RRC connection

Data Source

NodeB_RNC_RXI

Source Field

pmNoLoadSharingRrcConn

Source Section

UtranCell

pmNoLoadSharingRrcConnCs

Number of Conversational (originating and terminating) Load Sharing RRC Connection attempts.

Data Source

RNC

© Copyright IBM Corp. 2008, 2009. All Rights Reserved.

Source Field

pmNoLoadSharingRrcConnCs

Source Section

UtranCell

pmNoLoadSharingRrcConnPs

Number of Packet (originating and terminating) Load Sharing RRC Connection attempts.

Data Source

RNC

Source Field

pmNoLoadSharingRrcConnPs

Source Section

UtranCell

pmNoNonServingCellReqDeniedEul

Number of admission requests denied when requesting the cell as non-serving cell because the number of E-DCH users is above the admission threshold.

Data Source

RNC

Source Field

pmNoNonServingCellReqDeniedEul

Source Section

UtranCell

pmNoNormalNasSignReleaseCs

Number of successful normal releases of the NAS signalling sequence at call setup towards a CS CN from the originating states Idle, URA_PCH, CELL_FACH, CELL_DCH and URA_PCH/CELL_FACH. incremented in the best cell in the active set.

Data Source

RNC

Source Field

pmNoNormalNasSignReleaseCs

Source Section

UtranCell

pmNoNormalNasSignReleasePs

Number of successful normal releases of the NAS signalling sequence at call setup towards a PS CN from the originating states Idle, URA_PCH, CELL_FACH, CELL_DCH and URA_PCH/ CELL_FACH. incremented in the best cell in the active set.

Data Source

RNC

Source Field

pmNoNormalNasSignReleasePs

Source Section

UtranCell

pmNoNormalRabReleaseAmrNb

Number of normal RAB releases (AMR NB) for the best cell in the Active Set.

Data Source

RNC

Source Field

pmNoNormalRabReleaseAmrNb

Source Section

UtranCell

pmNoNormalRabReleaseAmrWb

Total number of normal RAB releases for AMR WB. Counted only for the best cell in the Active set.

Data Source

RNC

© Copyright IBM Corp. 2008, 2009. All Rights Reserved.

Source Field

pmNoNormalRabReleaseAmrWb

Source Section

UtranCell

pmNoNormalRabReleaseCs64

Number of successful normal RAB releases (CS Conversational 64 kbps [UDI]) referred to the Best Cell in the Active Set.

pmNoNormalRabReleaseCsStream

Number of successful normal RAB releases (CS Streaming) referred to the Best Cell in the Active Set.

pmNoNormalRabReleasePacket

Number of successful normal RAB releases (PS Data) for the best cell in Active Set

Data Source

NodeB_RNC_RXI

Source Field

pmNoNormalRabReleasePacket

Source Section

UtranCell

pmNoNormalRabReleasePacketStream

Number of successful normal RAB releases (PS Streaming) referred to the best Cell in the Active Set.

pmNoNormalRabReleasePacketStream128

Number of successful normal RAB releases (PS Streaming 128) referred to the Best Cell in the Active Set.

Data Source

RNC

Source Field

pmNoNormalRabReleasePacketStream128

Source Section

UtranCell

pmNoNormalRabReleasePacketUra

Number of normal RAB Release of Packet RAB while on URA_PCH.

Data Source

RNC

Source Field

pmNoNormalRabReleasePacketUra

Source Section

UtranCell

pmNoNormalRabReleasePsStreamHs

Number of successful normal RAB releases for RAB-type streaming PS unknown HS, counted on the best cell in the Active Set (if in SRNC).

Data Source

RNC

Source Field

pmNoNormalRabReleasePsStreamHs

Source Section

UtranCell

pmNoNormalRabReleaseSpeech

Number of successful normal RAB releases (Speech) for the best cell in Active Set

Data Source

NodeB_RNC_RXI

Source Field

pmNoNormalRabReleaseSpeech

© Copyright IBM Corp. 2008, 2009. All Rights Reserved.

Source Section

UtranCell

pmNoNormalRbReleaseEul

Number of normal RAB releases for PS Interactive RAB mapped on E-DCH/ HSDPA.

Data Source

RNC

Source Field

pmNoNormalRbReleaseEul

Source Section

UtranCell

pmNoNormalRbReleaseHs

The number of releases of packet RABs mapped on HS-DSCH in the Serving HS-DSCH cell with cause "Normal Release", "Successful Relocation", or "Resource Optimisation Relocation" indicated by the CN.

Data Source

RNC

Source Field

pmNoNormalRbReleaseHs

Source Section

UtranCell

pmNoNormalReleaseSrbOnly136

Total number of normal SRB 13.6/13.6 releases. Incremented in the best cell in the active set.

Data Source

RNC

Source Field

pmNoNormalReleaseSrbOnly136

Source Section

UtranCell

pmNoNormalReleaseSrbOnly34

Total number of normal SRB 3.4/3.4 releases. Incremented in the best cell in the active set.

Data Source

RNC

Source Field

pmNoNormalReleaseSrbOnly34

Source Section

UtranCell

pmNoOfIurSwDownNgCong

Number of non-guaranteed users served by another RNC terminated due to congestion.

Data Source

NodeB_RNC_RXI

Source Field

pmNoOfIurSwDownNgCong

Source Section

UtranCell

pmNoOfIurTermCsCong

Number of Circuit Switched radio conn served by another RNC terminated due to cong.

Data Source

NodeB_RNC_RXI

Source Field

pmNoOfIurTermCsCong

Source Section

UtranCell

© Copyright IBM Corp. 2008, 2009. All Rights Reserved.

pmNoOfIurTermHsCong

Number of HSDPA Radio Connections served over Iur terminated due to congestion.

Data Source

RNC

Source Field

pmNoOfIurTermHsCong

Source Section

UtranCell

pmNoOfIurTermSpeechCong

Number of speech radio connections served by another RNC terminated due to cong.

Data Source

NodeB_RNC_RXI

Source Field

pmNoOfIurTermSpeechCong

Source Section

UtranCell

pmNoOfNonHoReqDeniedCs

Number of non-handover admission requests denied for RLs carrying CS data or CS streaming (57.6) per cell.

pmNoOfNonHoReqDeniedEul

Number of admission requests denied at RAB establishment on E-DCH.

Data Source

RNC

Source Field

pmNoOfNonHoReqDeniedEul

Source Section

UtranCell

pmNoOfNonHoReqDeniedHs

Number of non-handover admission requests denied for RLs carrying HSDPA users in this cell.

Data Source

RNC

Source Field

pmNoOfNonHoReqDeniedHs

Source Section

UtranCell

pmNoOfNonHoReqDeniedInteractive

Number of non-handover admission requests denied for RLs carrying interactive or background services per cell.

pmNoOfNonHoReqDeniedPsStr128

Number of non-handover admission requests denied for RLs carrying PS streaming 128 in this cell.

Data Source

RNC

Source Field

pmNoOfNonHoReqDeniedPsStr128

Source Section

UtranCell

pmNoOfNonHoReqDeniedPsStreaming

Number of non-handover admission requests denied for RLs carrying PS Streaming services per cell.

pmNoOfNonHoReqDeniedSpeech

Number of non-handover admission requests denied for RLs carrying speech per cell.

© Copyright IBM Corp. 2008, 2009. All Rights Reserved.

pmNoOfReturningEmergencyCalls

Number of Emergency Call diversions failing on GSM and returning and establishing an RRC connection

Data Source

NodeB_RNC_RXI

Source Field

pmNoOfReturningEmergencyCalls

Source Section

UtranCell

pmNoOfReturningRrcConn

Number of Load Sharing diversions when establishing an RRC connection that returns to the first frequency

Data Source

NodeB_RNC_RXI

Source Field

pmNoOfReturningRrcConn

Source Section

UtranCell

pmNoOfRlForDriftingUes

Current number of RLs assigned in this cell for UEs that are served by another RNC

Data Source

NodeB_RNC_RXI

Source Field

pmNoOfRlForDriftingUes

Source Section

UtranCell

pmNoOfRlForNonDriftingUes

Current number of RLs assigned in this cell for UEs that are served by this RNC

Data Source

NodeB_RNC_RXI

Source Field

pmNoOfRlForNonDriftingUes

Source Section

UtranCell

pmNoOfSampAseDl

Number of samples of ASE downlink.

Data Source

NodeB_RNC_RXI

Source Field

pmNoOfSampAseDl

Source Section

UtranCell

pmNoOfSampAseUl

Number of samples of ASE Uplink.

Data Source

NodeB_RNC_RXI

Source Field

pmNoOfSampAseUl

Source Section

UtranCell

© Copyright IBM Corp. 2008, 2009. All Rights Reserved.

pmNoOfSwDownEulCong

Number of E-DCH users served by this RNC, which are down-switched due to DL congestion in both EUL serving cell and EUL non-serving cell.

Data Source

RNC

Source Field

pmNoOfSwDownEulCong

Source Section

UtranCell

pmNoOfSwDownHsCong

Number of Radio Connections served by this RNC, including an HSDPA service, which are channel switched down due to a congestion resolve action initiated on a serving Ue Context.

Data Source

RNC

Source Field

pmNoOfSwDownHsCong

Source Section

UtranCell

pmNoOfSwDownNgAdm

Number of downswitch requests for non-guaranteed users served by this RNC due to admission

Data Source

NodeB_RNC_RXI

Source Field

pmNoOfSwDownNgAdm

Source Section

UtranCell

pmNoOfSwDownNgCong

Number of non-guarant users serv by this RNC switch down to common Chan due to cong

Data Source

NodeB_RNC_RXI

Source Field

pmNoOfSwDownNgCong

Source Section

UtranCell

pmNoOfSwDownNgHo

Number of downswitch requests for non-guaranteed users served by this RNC due to handover

Data Source

NodeB_RNC_RXI

Source Field

pmNoOfSwDownNgHo

Source Section

UtranCell

pmNoOfTermCsCong

Number of Circuit Switched radio conn served by this RNC terminated due to cong.

Data Source

NodeB_RNC_RXI

Source Field

pmNoOfTermCsCong

Source Section

UtranCell

© Copyright IBM Corp. 2008, 2009. All Rights Reserved.

pmNoOfTermHsCong

Number of HSDPA Radio Connections served by this RNC terminated due to congestion.-Retired fr 5.0.11.0.0

Data Source

RNC

Source Field

pmNoOfTermHsCong

Source Section

UtranCell

pmNoOfTermSpeechCong

Number of speech radio connections served by this RNC terminated due to congestion.

Data Source

NodeB_RNC_RXI

Source Field

pmNoOfTermSpeechCong

Source Section

UtranCell

pmNoOutgoingEulHardHoAttempt

Number of attempted outgoing Hard HO for serving E-DCH cell selection. The counter is stepped in the best cell in the Active Set when the transition is triggered. The best cell is the cell with the highest measured quality defined by parameter UeMeasControl::hsQualityEstimate

Data Source

RNC

Source Field

pmNoOutgoingEulHardHoAttempt

Source Section

UtranCell

pmNoOutgoingEulHardHoSuccess

Number of successful outgoing Hard HO for serving E-DCH cell selection. The counter is stepped in the best cell in the Active Set when the transition is triggered. The best cell is the cell with the highest measured quality defined by parameter UeMeasControl::hsQualityEstimate

Data Source

RNC

Source Field

pmNoOutgoingEulHardHoSuccess

Source Section

UtranCell

pmNoOutgoingHsHardHoAttempt

Number of successful Hard HO for serving HS-DSCH cell selection. Source cell

Data Source

RNC

Source Field

pmNoOutgoingHsHardHoAttempt

Source Section

UtranCell

pmNoOutgoingHsHardHoSuccess

Number of successful Hard HO for serving HS-DSCH cell selection. Source cell

Data Source

RNC

Source Field

pmNoOutgoingHsHardHoSuccess

Source Section

UtranCell

© Copyright IBM Corp. 2008, 2009. All Rights Reserved.

pmNoOutgPsStreHsHhoAtt

Number of attempts Hard HO for serving HS-DSCH cell selection for PS Streaming. Source cell.

Data Source

RNC

Source Field

pmNoOutgoingPsStreamHsHhoAttempt

Source Section

UtranCell

pmNoOutgPsStrHsHhoSucc

Number of successful Hard HO for serving HS-DSCH cell selection for PS Streaming. Source cell.

Data Source

RNC

Source Field

pmNoOutgoingPsStreamHsHhoSuccess

Source Section

UtranCell

pmNoOutIratCcAtt_RUP

Total number of the PS Inter-RATCC attempts on DCH (roll up from GsmRelation)

Data Source

NodeB_RNC_RXI

Source Field

pmNoOutIratCcAtt

Source Section

GsmRelation

pmNoOutIratCcReturnOldCh_RUP

Total number of the PS Inter-RATCC attempts for UE on DCH where the UE returns to old channel (roll up from GsmRelation)

Data Source

NodeB_RNC_RXI

Source Field

pmNoOutIratCcReturnOldCh

Source Section

GsmRelation

pmNoOutIratCcSuccess_RUP

Number of successful PS Inter RAT cell change attempts for UE on dedicated channel. The counter is triggered by CN Iu Release Command following the sending of the CELL CHANGE ORDER FROM UTRAN message.(roll up from GsmRelation)

Data Source

RNC

Source Field

pmNoOutIratCcSuccess

Source Section

GsmRelation_to_UtranCell

pmNoPacketDchDiscAbnorm

Number of abnormal disconnect of a packet call over DCH for the Best Cell in the Active Set

Data Source

NodeB_RNC_RXI

Source Field

pmNoPacketDchDiscAbnorm

Source Section

UtranCell

© Copyright IBM Corp. 2008, 2009. All Rights Reserved.

pmNoPacketDchDiscNormal

Number of normal disconnect of a packet call over DCH for the Best Cell in the Active Set

Data Source

NodeB_RNC_RXI

Source Field

pmNoPacketDchDiscNormal

Source Section

UtranCell

pmNoPagingAttemptCnInitDcch

Number of CN-initiated pages sent on DCCH to Connected mode UEs.

Data Source

NodeB_RNC_RXI

Source Field

pmNoPagingAttemptCnInitDcch

Source Section

UtranCell

pmNoPagingAttemptUtranRejected

Number of page req rejected by WCDMA RAN. Inc both CN and WCDMA RAN init pagings.

Data Source

NodeB_RNC_RXI

Source Field

pmNoPagingAttemptUtranRejected

Source Section

UtranCell

pmNoPagingType1Attempt

Number of paging type 1 attempts to idle UEs in a cell (excluding retransmissions).

Data Source

RNC

Source Field

pmNoPagingType1Attempt

Source Section

UtranCell

pmNoPagingType1AttemptCs

Number of paging type 1 attempts with cause 'Terminating Conversational Call' to idle UEs in a cell (excluding retransmissions).

Data Source

RNC

Source Field

pmNoPagingType1AttemptCs

Source Section

UtranCell

pmNoPagingType1AttemptPs

Number of paging type 1 attempts with cause 'Terminating Interactive Call' or 'Terminating Background Call' to idle UEs in a cell (excluding retransmissions).

Data Source

RNC

Source Field

pmNoPagingType1AttemptPs

Source Section

UtranCell

pmNoPsStream128Ps8DchDiscAbnorm

Number of abnormal RRC disconnects of a PS Streaming 16/128 + Packet 8kbps connection for the best cell in the active set.

© Copyright IBM Corp. 2008, 2009. All Rights Reserved.

Data Source

RNC

Source Field

pmNoPsStream128Ps8DchDiscAbnorm

Source Section

UtranCell

pmNoPsStream128Ps8DchDiscNormal

Number of normal RRC disconnects of a PS Streaming 16/128 + Packet 8kbps connection for the best cell in the active set

Data Source

RNC

Source Field

pmNoPsStream128Ps8DchDiscNormal

Source Section

UtranCell

pmNoPsStream64Ps8DchDiscAbnorm

Number of abnormal disconnects of a PS streaming 64 kbps + PS 8kbps multiRAB for the best cell in the active set.

Data Source

NodeB_RNC_RXI

Source Field

pmNoPsStream64Ps8DchDiscAbnorm

Source Section

UtranCell

pmNoPsStream64Ps8DchDiscNormal

Number of normal disconnects of a PS streaming 64 kbps + PS 8kbps multiRAB for the best cell in the active set.

Data Source

NodeB_RNC_RXI

Source Field

pmNoPsStream64Ps8DchDiscNormal

Source Section

UtranCell

pmNoPsStreamHsCcAttempt

Number of HS cell change attempts for RAB type streaming PS (HS), counted on the HS-serving cell (if in the SRNC).

Data Source

RNC

Source Field

pmNoPsStreamHsCcAttempt

Source Section

UtranCell

pmNoPsStreamHsCcSuccess

Number of successful HS cell change attempts for RAB type streaming PS (HS), counted on the HS-serving cell (if in the SRNC).

Data Source

RNC

Source Field

pmNoPsStreamHsCcSuccess

Source Section

UtranCell

pmNoPsStrHsHhoRtnOldSource

Number of failed Hard HO for serving HS-DSCH cell selection and UE connection maintained for PS Streaming. Source cell.

© Copyright IBM Corp. 2008, 2009. All Rights Reserved.

Data Source

RNC

Source Field

pmNoPsStreamHsHhoReturnOldSource

Source Section

UtranCell

pmNoPsStrHsHhoRtnOldTarget

Number of failed Hard HO for serving HS-DSCH cell selection and UE connection maintained for PS Streaming. Target Cell.

Data Source

RNC

Source Field

pmNoPsStreamHsHhoReturnOldTarget

Source Section

UtranCell

pmNoRabEstablishAttemptAmrNb

Number of RAB establishment attempts (AMR NB) for the best cell in the Active Set.

Data Source

RNC

Source Field

pmNoRabEstablishAttemptAmrNb

Source Section

UtranCell

pmNoRabEstablishAttemptAmrWb

Total number of attempted RAB establishments for AMR WB. Counted only for the best cell in the Active set.

Data Source

RNC

Source Field

pmNoRabEstablishAttemptAmrWb

Source Section

UtranCell

pmNoRabEstablishAttemptCs57

Number of RAB establishments attempts (CS 57) referred to the Best Cell in the Active Set.

pmNoRabEstablishAttemptCs64

Number of RAB establishment attempts (CS 64) referred to the Best Cell in the Active Set

Data Source

NodeB_RNC_RXI

Source Field

pmNoRabEstablishAttemptCs64

Source Section

UtranCell

pmNoRabEstablishAttemptPacketInteractive

Number of RAB establishments attempts (PS Data, Interactive) referred to the Best Cell in the Active Set.

pmNoRabEstablishAttemptPacketInteractiveHs

The number of attempted RAB establishments for PS Interactive RAB mapped on HS-DSCH.

Data Source

RNC

Source Field

pmNoRabEstablishAttemptPacketInteractiveHs

© Copyright IBM Corp. 2008, 2009. All Rights Reserved.

Source Section

UtranCell

pmNoRabEstablishAttemptPacketStream

Number of RAB establishments attempts (PS Streaming) referred to the Best Cell in the Active Set.

pmNoRabEstablishAttemptPacketStream128

Number of RAB establishment's attempts (PS Streaming 128) referred to the Best Cell in the Active Set.

Data Source

RNC

Source Field

pmNoRabEstablishAttemptPacketStream128

Source Section

UtranCell

pmNoRabEstablishAttemptSpeech

Number of RAB establishment attempts (Speech) referred to the Best Cell in the Active Set

Data Source

NodeB_RNC_RXI

Source Field

pmNoRabEstablishAttemptSpeech

Source Section

UtranCell

pmNoRabEstablishSuccessAmrNb

Number of successful RAB establishments (AMR NB) for the best cell in the Active Set.

Data Source

RNC

Source Field

pmNoRabEstablishSuccessAmrNb

Source Section

UtranCell

pmNoRabEstablishSuccessAmrWb

Total number of successful RAB establishments for AMR WB. Counted only for the best cell in the Active set.

Data Source

RNC

Source Field

pmNoRabEstablishSuccessAmrWb

Source Section

UtranCell

pmNoRabEstablishSuccessCs57

Number of successful RAB establishments (CS 57) referred to the Best Cell in the Active Set.

pmNoRabEstablishSuccessCs64

Number of successful RAB establishments (CS 64) referred to the Best Cell in the Active Set

Data Source

NodeB_RNC_RXI

Source Field

pmNoRabEstablishSuccessCs64

Source Section

UtranCell

pmNoRabEstablishSuccessPacketInteractive

Number of successful RAB establishments (PS Data, Interactive) referred to the Best Cell in the Active Set.

© Copyright IBM Corp. 2008, 2009. All Rights Reserved.

pmNoRabEstablishSuccessPacketInteractiveHs

The number of successful RAB establishments for PS Interactive RAB mapped on HS-DSCH.

Data Source

RNC

Source Field

pmNoRabEstablishSuccessPacketInteractiveHs

Source Section

UtranCell

pmNoRabEstablishSuccessPacketStream

Number of successful RAB establishments (PS Streaming) referred to the Best Cell in the Active Set.

pmNoRabEstablishSuccessPacketStream128

Number of successful RAB establishments (PS Streaming 128) referred to the Best Cell in the Active Set.

Data Source

RNC

Source Field

pmNoRabEstablishSuccessPacketStream128

Source Section

UtranCell

pmNoRabEstablishSuccessSpeech

Number of successful RAB establishments (Speech) referred to the Best Cell in the Active Set

Data Source

NodeB_RNC_RXI

Source Field

pmNoRabEstablishSuccessSpeech

Source Section

UtranCell

pmNoRabEstAttemptPsIntNonHs

Number of RAB establishment attempts for the PS Interactive RAB in a non-HS configuration (that is on DCH or FACH). Reported on the best cell in the active set.

Data Source

RNC

Source Field

pmNoRabEstAttemptPsIntNonHs

Source Section

UtranCell

pmNoRabEstAttemptPsStreamHs

Number of RAB establishment attempts for RAB type streaming PS (HS), counted on the HS-serving cell.

Data Source

RNC

Source Field

pmNoRabEstAttemptPsStreamHs

Source Section

UtranCell

pmNoRabEstAttPacketInteractiveEul

Number of attempted RAB establishments for PS Interactive RAB mapped on E-DCH/ HSDPA .

Data Source

RNC

Source Field

pmNoRabEstablishAttemptPacketInteractiveEul

© Copyright IBM Corp. 2008, 2009. All Rights Reserved.

Source Section

UtranCell

pmNoRabEstBkRnBtPsStrHs

Number of RAB establishment attempts for RAB-type streaming PS unknown HS that are blocked due to RN congestion or RN failure, counted on the best cell.

Data Source

RNC

Source Field

pmNoRabEstBlockRnBestPsStreamHs

Source Section

UtranCell

pmNoRabEstBlkNPsIntNonHsBt

Number of RAB establishment attempts for RAB-type PS Interactive that are blocked due to node congestion or node failure, counted on the best cell.

Data Source

RNC

Source Field

pmNoRabEstBlkNodePsIntNonHsBest

Source Section

UtranCell

pmNoRabEstBlkNPsStrNonHsBt

Number of RAB establishment attempts for RAB-type PS Streaming that are blocked due to node congestion or node failure, counted on the best cell.

Data Source

RNC

Source Field

pmNoRabEstBlkNodePsStrNonHsBest

Source Section

UtranCell

pmNoRabEstBlkTnPsIntHsBt

Number of RAB establishment attempts for RAB-type PS Interactive for HS that are blocked due to TN congestion or TN failure, counted on the best cell.

Data Source

RNC

Source Field

pmNoRabEstBlockTnPsIntHsBest

Source Section

UtranCell

pmNoRabEstBlkTnPsStrHsBt

Number of RAB establishment attempts for RAB-type PS Streaming for HS that are blocked due to TN congestion or TN failure, counted on the best cell.

Data Source

RNC

Source Field

pmNoRabEstBlockTnPsStreamHsBest

Source Section

UtranCell

pmNoRabEstBlkTnPsStrNonHsBt

Number of RAB establishment attempts for RAB-type PS Streaming that are blocked due to TN congestion or TN failure, counted on the best cell.

Data Source

RNC

Source Field

pmNoRabEstBlockTnPsStrNonHsBest

© Copyright IBM Corp. 2008, 2009. All Rights Reserved.

Source Section

UtranCell

pmNoRabEstBlockNodeCs57Best

Number of RAB establishment attempts for RAB-type CS57 that are blocked due to node congestion or node failure, counted on the best cell.

Data Source

RNC

Source Field

pmNoRabEstBlockNodeCs57Best

Source Section

UtranCell

pmNoRabEstBlockNodeCs64Best

Number of RAB establishment attempts for RAB-type CS64 that are blocked due to node congestion or node failure, counted on the best cell.

Data Source

RNC

Source Field

pmNoRabEstBlockNodeCs64Best

Source Section

UtranCell

pmNoRabEstBlockNodePsIntHsBest

Number of RAB establishment attempts for RAB-type PS Interactive for HS that are blocked due to node congestion or node failure, counted on the best cell.

Data Source

RNC

Source Field

pmNoRabEstBlockNodePsIntHsBest

Source Section

UtranCell

pmNoRabEstBlockNodePsStrHsBest

Number of RAB establishment attempts for RAB-type PS Streaming for HS that are blocked due to node congestion or node failure, counted on the best cell.

Data Source

RNC

Source Field

pmNoRabEstBlockNodePsStrHsBest

Source Section

UtranCell

pmNoRabEstBlockNodeSpeechBest

Number of RAB establishment attempts for RAB-type CS Speech that are blocked due to node congestion or node failure, counted on the best cell.

Data Source

RNC

Source Field

pmNoRabEstBlockNodeSpeechBest

Source Section

UtranCell

pmNoRabEstBlockRnPsStreamHs

Number of RAB establishment attempts for RAB-type streaming PS unknown HS that are blocked due to on the blocking cell.

Data Source

RNC

Source Field

pmNoRabEstBlockRnPsStreamHs

© Copyright IBM Corp. 2008, 2009. All Rights Reserved.

Source Section

UtranCell

pmNoRabEstBlockTnCs57

Number of RAB establishment attempts for RAB-type CS57 that are blocked due to TN congestion or TN failure, counted on the blocking cell.

Data Source

RNC

Source Field

pmNoRabEstBlockTnCs57

Source Section

UtranCell

pmNoRabEstBlockTnCs57Best

Number of RAB establishment attempts for RAB-type CS57 that are blocked due to TN congestion or TN failure, counted on the best cell.

Data Source

RNC

Source Field

pmNoRabEstBlockTnCs57Best

Source Section

UtranCell

pmNoRabEstBlockTnCs64

Number of RAB establishment attempts for RAB-type CS64 that are blocked due to TN congestion or TN failure, counted on the blocking cell.

Data Source

RNC

Source Field

pmNoRabEstBlockTnCs64

Source Section

UtranCell

pmNoRabEstBlockTnCs64Best

Number of RAB establishment attempts for RAB-type CS64 that are blocked due to TN congestion or TN failure, counted on the best cell.

Data Source

RNC

Source Field

pmNoRabEstBlockTnCs64Best

Source Section

UtranCell

pmNoRabEstBlockTnPsIntHs

Number of RAB establishment attempts for RAB-type PS Interactive for HS that are blocked due to TN congestion or TN failure, counted on the blocking cell.

Data Source

RNC

Source Field

pmNoRabEstBlockTnPsIntHs

Source Section

UtranCell

pmNoRabEstBlockTnPsIntNonHs

Number of RAB establishment attempts for RAB-type PS Interactive that are blocked due to TN congestion or TN failure, counted on the blocking cell.

Data Source

RNC

Source Field

pmNoRabEstBlockTnPsIntNonHs

© Copyright IBM Corp. 2008, 2009. All Rights Reserved.

Source Section

UtranCell

pmNoRabEstBlockTnPsIntNonHsBest

Number of RAB establishment attempts for RAB-type PS Interactive that are blocked due to TN congestion or TN failure, counted on the best cell.

Data Source

RNC

Source Field

pmNoRabEstBlockTnPsIntNonHsBest

Source Section

UtranCell

pmNoRabEstBlockTnPsStrHs

Number of RAB establishment attempts for RAB-type PS Streaming for HS that are blocked due to TN congestion or TN failure, counted on the blocking cell.

Data Source

RNC

Source Field

pmNoRabEstBlockTnPsStrHs

Source Section

UtranCell

pmNoRabEstBlockTnPsStrNonHs

Number of RAB establishment attempts for RAB-type PS Streaming that are blocked due to TN congestion or TN failure, counted on the blocking cell.

Data Source

RNC

Source Field

pmNoRabEstBlockTnPsStrNonHs

Source Section

UtranCell

pmNoRabEstBlockTnSpeech

Number of RAB establishment attempts for RAB-type Speech that are blocked due to TN congestion or TN failure, counted on the blocking cell.

Data Source

RNC

Source Field

pmNoRabEstBlockTnSpeech

Source Section

UtranCell

pmNoRabEstBlockTnSpeechBest

Number of RAB establishment attempts for RAB-type Speech that are blocked due to TN congestion or TN failure, counted on the best cell.

Data Source

RNC

Source Field

pmNoRabEstBlockTnSpeechBest

Source Section

UtranCell

pmNoRabEstSuccessPsIntNonHs

Number of successful RAB establishments for the PS Interactive RAB in a non-HS configuration (that is on DCH or FACH). Reported on the best cell in the active set.

Data Source

RNC

Source Field

pmNoRabEstSuccessPsIntNonHs

© Copyright IBM Corp. 2008, 2009. All Rights Reserved.

Source Section

UtranCell

pmNoRabEstSuccessPsStreamHs

Number of successful RAB establishment attempts for RAB type streaming PS (HS), counted on the HS-serving cell.

Data Source

RNC

Source Field

pmNoRabEstSuccessPsStreamHs

Source Section

UtranCell

pmNoRabEstSuccPacketInteractiveEul

The number of successful RAB establishments for PS Interactive RAB mapped on E-DCH/ HSDPA

Data Source

RNC

Source Field

pmNoRabEstablishSuccessPacketInteractiveEul

Source Section

UtranCell

pmNoReceivedSduDtchHs

The total number of received Packet Interactive HS DTCH RLC SDUs.

Data Source

RNC

Source Field

pmNoReceivedSduDtchHs

Source Section

Hsdsch

pmNoReceivedSduDtchHsPsStream

Total number of received SDUs on a DTCH in the uplink direction for a PS Streaming RB.

Data Source

RNC

Source Field

pmNoReceivedSduDtchHsPsStream

Source Section

UtranCell

pmNoRejRrcConnMpLoadC

Number of rejected RRC connections due to module MP load control (includes incoming Inter-RAT CC)

Data Source

NodeB_RNC_RXI

Source Field

pmNoRejRrcConnMpLoadC

Source Section

UtranCell

pmNoReqDeniedAdm

Number of RAB estabt & RRC req denied due to admission for both serv & drift UEs.

Data Source

NodeB_RNC_RXI

Source Field

pmNoReqDeniedAdm

© Copyright IBM Corp. 2008, 2009. All Rights Reserved.

Source Section

UtranCell

pmNoRlDeniedAdm

Number of Radio Link setup or Radio Link addition requests denied by admission control.

Data Source

RNC

Source Field

pmNoRlDeniedAdm

Source Section

UtranCell

pmNoRrcConnReqBlockNodeCs

Number of RRC Connection Setup attempts for Circuit Switched calls that fail due to node blocking.

Data Source

RNC

Source Field

pmNoRrcConnReqBlockNodeCs

Source Section

UtranCell

pmNoRrcConnReqBlockNodePs

Number of RRC Connection Setup attempts for Packet Switched calls that fail due to node blocking.

Data Source

RNC

Source Field

pmNoRrcConnReqBlockNodePs

Source Section

UtranCell

pmNoRrcConnReqBlockTnCs

Number of RRC Connection Setup attempts for Circuit Switched calls that fail due to Transport Network blocking, counted on the blocking cell.

Data Source

RNC

Source Field

pmNoRrcConnReqBlockTnCs

Source Section

UtranCell

pmNoRrcConnReqBlockTnCsBest

Number of RRC Connection Setup attempts for Circuit Switched calls that fail due to Transport Network blocking, counted on the best cell.

Data Source

RNC

Source Field

pmNoRrcConnReqBlockTnCsBest

Source Section

UtranCell

pmNoRrcConnReqBlockTnPs

Number of RRC Connection Setup attempts for Packet Switched calls that fail due to Transport Network blocking, counted on the blocking cell.

Data Source

RNC

Source Field

pmNoRrcConnReqBlockTnPs

© Copyright IBM Corp. 2008, 2009. All Rights Reserved.

Source Section

UtranCell

pmNoRrcConnReqBlockTnPsBest

Number of RRC Connection Setup attempts for Packet Switched calls that fail due to Transport Network blocking, counted on the best cell.

Data Source

RNC

Source Field

pmNoRrcConnReqBlockTnPsBest

Source Section

UtranCell

pmNoRrcCsReqDeniedAdm

Number of CS calls denied by admission control.

Data Source

RNC

Source Field

pmNoRrcCsReqDeniedAdm

Source Section

UtranCell

pmNoRrcPsReqDeniedAdm

Number of PS calls denied by admission control.

Data Source

RNC

Source Field

pmNoRrcPsReqDeniedAdm

Source Section

UtranCell

pmNoRrcReqDeniedAdm

Number of RRC requests denied by admission control.

Data Source

RNC

Source Field

pmNoRrcReqDeniedAdm

Source Section

UtranCell

pmNoRrcReqDeniedAdmDlChnlCode

Number of RRC Connection Requests denied by admission control due to lack of DL Channelisation Codes.

Data Source

RNC

Source Field

pmNoRrcReqDeniedAdmDlChnlCode

Source Section

UtranCell

pmNoRrcReqDeniedAdmDlHw

Number of RRC Connection Requests denied by admission control due to lack of DL hardware resources.

Data Source

RNC

Source Field

pmNoRrcReqDeniedAdmDlHw

© Copyright IBM Corp. 2008, 2009. All Rights Reserved.

Source Section

UtranCell

pmNoRrcReqDeniedAdmDlPwr

Number of RRC Connection Requests denied by admission control due to lack of DL Power.

Data Source

RNC

Source Field

pmNoRrcReqDeniedAdmDlPwr

Source Section

UtranCell

pmNoRrcReqDeniedAdmUlHw

Number of RRC Connection Requests denied by admission control due to lack of UL hardware resources.

Data Source

RNC

Source Field

pmNoRrcReqDeniedAdmUlHw

Source Section

UtranCell

pmNoRxSduDtchDlPsStr

Total number of received SDUs on a DTCH in DL for a PS Streaming RB. Measured only in SRNC, on the best cell in the active set.

Data Source

RNC

Source Field

pmNoReceivedSduDtchDlPsStreaming

Source Section

UtranCell

pmNoRxSduDtchUlPsStre

Total number of received SDUs on a DTCH in UL for a PS Streaming RB. Measured only in SRNC, on the best cell in the active set.

Data Source

RNC

Source Field

pmNoReceivedSduDtchUlPsStreaming

Source Section

UtranCell

pmNoServingCellReqDeniedEul

Number of admission requests denied when requesting the cell as serving cell because the number of E-DCH users is above the admission threshold.

Data Source

RNC

Source Field

pmNoServingCellReqDeniedEul

Source Section

UtranCell

pmNoSpeechDchDiscAbnorm

Number of abnormal disconnect of a speech call for the Best Cell in the Active Set

Data Source

NodeB_RNC_RXI

Source Field

pmNoSpeechDchDiscAbnorm

© Copyright IBM Corp. 2008, 2009. All Rights Reserved.

Source Section

UtranCell

pmNoSpeechDchDiscNormal

Number of normal disconnect of a speech call for the Best Cell in the Active Set

Data Source

NodeB_RNC_RXI

Source Field

pmNoSpeechDchDiscNormal

Source Section

UtranCell

pmNoSrvCellReqDeniedEulTti2

Number of admission requests denied because the number of E-DCH 2 ms users is above the admission threshold, when requesting the cell as serving cell. Counted in the blocking cell.

Data Source

RNC

Source Field

pmNoServingCellReqDeniedEulTti2

Source Section

UtranCell

pmNoSuccessOutIratHoCs57_RUP

Number of successful outgoing (to GSM) inter-RAT handover for 'streaming 57.6 kbps CS RAB' for the best cell in the active set (roll up from GsmRelation)

Data Source

NodeB_RNC_RXI

Source Field

pmNoSuccessOutIratHoCs57

Source Section

GsmRelation

pmNoSuccessOutIratHoMulti_RUP

Number of attempted outgoing (to GSM) inter-RAT handover for 'multi RAB' for the best cell in the active set (roll up from GsmRelation)

Data Source

NodeB_RNC_RXI

Source Field

pmNoSuccessOutIratHoMulti

Source Section

GsmRelation

pmNoSuccessOutIratHoSpeech_RUP

Number of successful outgoing (to GSM) inter-RAT handover for 'Conversational speech RAB' for the best cell in the active set (roll up from GsmRelation)

Data Source

NodeB_RNC_RXI

Source Field

pmNoSuccessOutIratHoSpeech

Source Section

GsmRelation

pmNoSuccessOutIratHoStandalone_RUP

Number of attempted outgoing (to GSM) inter-RAT handover for 'Standalone signalling connection' for the best cell in the active set (roll up from GsmRelation)

Data Source

NodeB_RNC_RXI

Source Field

pmNoSuccessOutIratHoStandalone

© Copyright IBM Corp. 2008, 2009. All Rights Reserved.

Source Section

GsmRelation

pmNoSuccessOutSbHoSpeech_RUP

Number of successful outgoing Service Based GSM Handover for 'Conversational speech RAB' for the best cell in the active set.(roll up from GsmRelation)

Data Source

RNC

Source Field

pmNoSuccessOutSbHoSpeech

Source Section

GsmRelation_to_UtranCell

pmNoSuccRbReconfOrigPsIntDch

Number of successful reconfigurations of PS Interactive RABs on CELL_DCH from DCH/DCH at RAB Establishment, RAB Release and Channel Switching (any trigger reason). Incremented in the best cell in the active set.

Data Source

RNC

Source Field

pmNoSuccRbReconfOrigPsIntDch

Source Section

UtranCell

pmNoSuccRbReconfOrigPsIntEul

Number of successful reconfigurations of PS Interactive RABs on CELL_DCH from EUL/HS at RAB Establishment, RAB Release and Channel Switching (any trigger reason). Incremented in the best cell in the active set.

Data Source

RNC

Source Field

pmNoSuccRbReconfOrigPsIntEul

Source Section

UtranCell

pmNoSuccRbReconfOrigPsIntHs

Number of successful reconfigurations of PS Interactive RABs on CELL_DCH from DCH/HS at RAB Establishment, RAB Release and Channel Switching (any trigger reason). Incremented in the best cell in the active set.

Data Source

RNC

Source Field

pmNoSuccRbReconfOrigPsIntHs

Source Section

UtranCell

pmNoSuccRbReconfPsIntDch

Number of successful reconfigurations of PS Interactive RABs on CELL_DCH to DCH/DCH at RAB Establishment, RAB Release and Channel Switching (any trigger reason). Incremented in the best cell in the active set.

Data Source

RNC

Source Field

pmNoSuccRbReconfPsIntDch

Source Section

UtranCell

pmNoSuccRbReconfPsIntEul

Number of successful reconfigurations of PS Interactive RABs on CELL_DCH to EUL/HS at RAB Establishment, RAB Release and Channel Switching (any trigger reason). Incremented in the best cell in the active set.

© Copyright IBM Corp. 2008, 2009. All Rights Reserved.

Data Source

RNC

Source Field

pmNoSuccRbReconfPsIntEul

Source Section

UtranCell

pmNoSuccRbReconfPsIntHs

Number of successful reconfigurations of PS Interactive RABs on CELL_DCH to DCH/HS at RAB Establishment, RAB Release and Channel Switching (any trigger reason). Incremented in the best cell in the active set.

Data Source

RNC

Source Field

pmNoSuccRbReconfPsIntHs

Source Section

UtranCell

pmNoSysRelSpeechNeighbr

Number of system disconnects of a speech cell for the best cell in the active set due to unknown measured cell (missing neighbour relation). (In P 2.1.4, pmTotNoRrcConnectAttIratCcOrder was used for this purpose.)

Data Source

NodeB_RNC_RXI

Source Field

pmNoSysRelSpeechNeighbr

Source Section

UtranCell

pmNoSysRelSpeechSoHo

Number of system disconnects of a speech cell for the best cell in the active set due to Soft Handover action. (In P 2.1.4, pmFrmNoOfDiscardedFrames was used for this purpose.)

Data Source

NodeB_RNC_RXI

Source Field

pmNoSysRelSpeechSoHo

Source Section

UtranCell

pmNoSysRelSpeechULSynch

Number of system disconnects of a speech cell for the best cell in the active set due to lost UL synch. (In P 2.1.4, pmTotNoRrcConnectAttIratCellResel was used for this purpose.)

Data Source

NodeB_RNC_RXI

Source Field

pmNoSysRelSpeechUlSynch

Source Section

UtranCell

pmNoSystemNasSignReleaseCs

Number of system releases of the NAS signalling sequence at call setup towards a CS CN from the originating states Idle, URA_PCH, CELL_FACH, CELL_DCH and URA_PCH/ CELL_FACH. Incremented in the best cell in the active set.

Data Source

RNC

Source Field

pmNoSystemNasSignReleaseCs

Source Section

UtranCell

© Copyright IBM Corp. 2008, 2009. All Rights Reserved.

pmNoSystemNasSignReleasePs

Number of system releases of the NAS signalling sequence at call setup towards a PS CN from the originating states Idle, URA_PCH, CELL_FACH, CELL_DCH and URA_PCH/ CELL_FACH. Incremented in the best cell in the active set.

Data Source

RNC

Source Field

pmNoSystemNasSignReleasePs

Source Section

UtranCell

pmNoSystemRabReleaseAmrNb

Number of system RAB releases (AMR NB) for the best cell in the Active Set.

Data Source

RNC

Source Field

pmNoSystemRabReleaseAmrNb

Source Section

UtranCell

pmNoSystemRabReleaseAmrWb

Total number of system RAB releases for AMR-WB. Counted only for the best cell in the Active set.

Data Source

RNC

Source Field

pmNoSystemRabReleaseAmrWb

Source Section

UtranCell

pmNoSystemRabReleaseCs64

Number of successful system RAB releases (CS Conversational 64 kpbs [UDI]) referred to the Best Cell in the Active Set.

pmNoSystemRabReleaseCsStream

Number of successful system RAB releases (CS Streaming) referred to the Best Cell in the Active Set.

pmNoSystemRabReleasePacket

Number of successful system RAB releases (PS Data) for the best cell in Active Set

Data Source

NodeB_RNC_RXI

Source Field

pmNoSystemRabReleasePacket

Source Section

UtranCell

pmNoSystemRabReleasePacketStream

Number of successful system RAB releases (PS Streaming) referred to the Best Cell in the Active Set.

pmNoSystemRabReleasePacketStream128

Number of successful system RAB releases (PS Streaming 128) referred to the Best Cell in the Active Set.

Data Source

RNC

Source Field

pmNoSystemRabReleasePacketStream128

Source Section

UtranCell

pmNoSystemRabReleasePacketUra

Number of system RAB Release of Packet RAB while on URA_PCH.

© Copyright IBM Corp. 2008, 2009. All Rights Reserved.

Data Source

RNC

Source Field

pmNoSystemRabReleasePacketUra

Source Section

UtranCell

pmNoSystemRabReleasePsStreamHs

Number of system initiated RAB releases for PS Interactive RAB mapped on E-DCH/ HSDPA.

Data Source

RNC

Source Field

pmNoSystemRabReleasePsStreamHs

Source Section

UtranCell

pmNoSystemRabReleaseSpeech

Number of successful system RAB releases (Speech) for the best cell in Active Set

Data Source

NodeB_RNC_RXI

Source Field

pmNoSystemRabReleaseSpeech

Source Section

UtranCell

pmNoSystemRbReleaseEul

Number of system initiated RAB releases for PS Interactive RAB mapped on E-DCH/ HSDPA.

Data Source

RNC

Source Field

pmNoSystemRbReleaseEul

Source Section

UtranCell

pmNoSystemRbReleaseHs

The number of releases of packet RABs mapped on HS-DSCH in the Serving HS-DSCH cell with all other causes than "Normal Release", "Successful Relocation", or "ResourceOptimisation Relocation" indicated by the CN.

Data Source

RNC

Source Field

pmNoSystemRbReleaseHs

Source Section

UtranCell

pmNoSystemReleaseSrbOnly136

Total number of system SRB 13.6/13.6 releases. Incremented in the best cell in the active set.

Data Source

RNC

Source Field

pmNoSystemReleaseSrbOnly136

Source Section

UtranCell

pmNoSystemReleaseSrbOnly34

Total number of system SRB 3.4/3.4 releases. Incremented in the best cell in the active set.

Data Source

RNC

© Copyright IBM Corp. 2008, 2009. All Rights Reserved.

Source Field

pmNoSystemReleaseSrbOnly34

Source Section

UtranCell

pmNoTimesCellFailAddToActSet

Number of times a cell fails to be added to an active set.

Data Source

NodeB_RNC_RXI

Source Field

pmNoTimesCellFailAddToActSet

Source Section

UtranCell

pmNoTimesIfhoCellFailAddToActSet

Number of times a cell fails to be added to an active set.

Data Source

RNC

Source Field

pmNoTimesIfhoCellFailAddToActSet

Source Section

UtranCell

pmNoTimesIfhoRlAddToActSet

Number of times an RL is added to an active set.

Data Source

RNC

Source Field

pmNoTimesIfhoRlAddToActSet

Source Section

UtranCell

pmNoTimesRlAddToActSet

Number of succ radio link additions to an active set (including those added when a radio link is replaced)

Data Source

NodeB_RNC_RXI

Source Field

pmNoTimesRlAddToActSet

Source Section

UtranCell

pmNoTimesRlDelFrActSet

Number of succ radio link deletions to an active set (including those added when a radio link is replaced)

Data Source

NodeB_RNC_RXI

Source Field

pmNoTimesRlDelFrActSet

Source Section

UtranCell

pmNoTimesRlRepInActSet

Number of successful radio link is replacements in an active set (stepped in the cell where the radio link is deleted)

Data Source

NodeB_RNC_RXI

Source Field

pmNoTimesRlRepInActSet

© Copyright IBM Corp. 2008, 2009. All Rights Reserved.

Source Section

UtranCell

pmNoTpSwitchSp64Speech

(Retired on P6)Number of successful Packet RAB releases when changing from Multi-RAB (Speech + PS64) to (Speech only) as a result of Multi-RAB down-switch evaluation Speech + PS64 -> Speech for the best cell in Active Set

Data Source

NodeB_RNC_RXI

Source Field

pmNoTpSwitchSp64Speech

Source Section

UtranCell

pmNoUraUpdAttempt

Number of attempted URA updates

Data Source

RNC

Source Field

pmNoUraUpdAttempt

Source Section

UtranCell

pmNoUraUpdSuccess

Number of successful URA updates

Data Source

RNC

Source Field

pmNoUraUpdSuccess

Source Section

UtranCell

pmPhyChnlReconfigAttempt

Physical channel reconfiguration success rate. The counter is stepped when the RRC Physical Channel Reconfiguration message is sent, except when it is sent for inter-frequency hard handovers.

Data Source

GPEH P4

Source Field

pmPhyChnlReconfigAttempt

Source Section

UtranCell

pmPhyChnlReconfigSuccess

Physical channel reconfiguration success rate. The counter is stepped when the RRC Physical Channel Reconfiguration Complete message is received, except when preceded by an RRC Physical Channel Reconfiguration message used for inter-frequency hard handover.

Data Source

GPEH P4

Source Field

pmPhyChnlReconfigSuccess

Source Section

UtranCell

pmPsIntDchToFachAtt

Number of reconfiguration attempts from DCH/DCH to RACH/FACH for a PS Interactive RAB. Incremented in the best cell in the active set.

Data Source

RNC

© Copyright IBM Corp. 2008, 2009. All Rights Reserved.

Source Field

pmPsIntDchToFachAtt

Source Section

UtranCell

pmPsIntDchToFachSucc

Number of successful reconfiguration attempts from DCH/DCH to RACH/FACH for a PS Interactive RAB. Incremented in the the best cell in the active set.

Data Source

RNC

Source Field

pmPsIntDchToFachSucc

Source Section

UtranCell

pmPsIntHsToFachAtt

Number of reconfiguration attempts from DCH/HS or EUL/HS to RACH/FACH for a PS Interactive RAB. Incremented in the serving HS-DSCH cell.

Data Source

RNC

Source Field

pmPsIntHsToFachAtt

Source Section

UtranCell

pmPsIntHsToFachSucc

Number of successful reconfigurations from DCH/HS or EUL/HS to RACH/FACH for a PS Interactive RAB. Incremented in the serving HS-DSCH cell.

Data Source

RNC

Source Field

pmPsIntHsToFachSucc

Source Section

UtranCell

pmPsStreamHsToDchAttempt

Number of reconfiguration HS-DSCH to DCH attempts for RAB type streaming PS (HS), counted in the best cell (if in the SRNC).

Data Source

RNC

Source Field

pmPsStreamHsToDchAttempt

Source Section

UtranCell

pmPsStreamHsToDchSuccess

Number of successful reconfiguration HS-DSCH to DCH successes for RAB type streaming PS (HS), counted in the best cell (if in the SRNC).

Data Source

RNC

Source Field

pmPsStreamHsToDchSuccess

Source Section

UtranCell

pmRabEstablishAttemptBackground

RAB Establishment Attempt. RRC Establishment Cause: 03-originatingBackgroundCall, 08-terminatingBackgroundCall

Data Source

GPEH P5MD

© Copyright IBM Corp. 2008, 2009. All Rights Reserved.

Source Field

pmRabEstablishAttemptBackground

Source Section

UtranCell

pmRabEstablishAttemptConvers

RAB Establishment Attempt. RRC Establishment Cause: 00-originatingConversationalCall, 05-terminatingConversationalCall

Data Source

GPEH P5MD

Source Field

pmRabEstablishAttemptConvers

Source Section

UtranCell

pmRabEstablishAttemptInteractive

RAB Establishment Attempt. RRC Establishment Cause: 02-originatingInteractiveCall, 07-terminatingInteractiveCall

Data Source

GPEH P5MD

Source Field

pmRabEstablishAttemptInteractive

Source Section

UtranCell

pmRabEstablishAttemptStream

RAB Establishment Attempt. RRC Establishment Cause: 01-originatingStreamingCall, 06-terminatingStreamingCall

Data Source

GPEH P5MD

Source Field

pmRabEstablishAttemptStream

Source Section

UtranCell

pmRabEstablishEcAttempt

Number of RAB Establishment attempts for an Emergency Call

Data Source

RNC

Source Field

pmRabEstablishEcAttempt

Source Section

UtranCell

pmRabEstablishEcSuccess

Number of successful RAB Establishment attempts for an Emergency Call

Data Source

RNC

Source Field

pmRabEstablishEcSuccess

Source Section

UtranCell

pmRabEstablishSuccessBackground

RAB Establishment Success. RRC Establishment Cause: 03-originatingBackgroundCall, 08-terminatingBackgroundCall

Data Source

GPEH P5MD

© Copyright IBM Corp. 2008, 2009. All Rights Reserved.

Source Field

pmRabEstablishSuccessBackground

Source Section

UtranCell

pmRabEstablishSuccessConvers

RAB Establishment Success. RRC Establishment Cause: 00-originatingConversationalCall, 05-terminatingConversationalCall

Data Source

GPEH P5MD

Source Field

pmRabEstablishSuccessConvers

Source Section

UtranCell

pmRabEstablishSuccessInteractive

RAB Establishment Success. RRC Establishment Cause: 02-originatingInteractiveCall, 07-terminatingInteractiveCall

Data Source

GPEH P5MD

Source Field

pmRabEstablishSuccessInteractive

Source Section

UtranCell

pmRabEstablishSuccessStream

RAB Establishment Success. RRC Establishment Cause: 01-originatingStreamingCall, 06-terminatingStreamingCall

Data Source

GPEH P5MD

Source Field

pmRabEstablishSuccessStream

Source Section

UtranCell

pmRabEstFailDirRetry

Call Drop due to Directed Retry. Step counter when RANAP RAB Assignment Response is received and cause = Directed Retry

Data Source

GPEH P4

Source Field

pmRabEstFailDirRetry

Source Section

UtranCell

pmRabEstFailGuarBitRateUlUnavail

Requested Guaranteed Bit Rate for UL not Available. Step counter when RANAP RAB Assignment Response is received and cause = Requested Guaranteed Bit Rate for UL not Available.

Data Source

GPEH P4

Source Field

pmRabEstFailGuarBitRateUlUnavail

Source Section

UtranCell

pmRabEstFailInvalidRabId

Invalid RAB ID. Step counter when RANAP RAB Assignment Response is received and cause = Invalid RAB ID.

Data Source

GPEH P4

© Copyright IBM Corp. 2008, 2009. All Rights Reserved.

Source Field

pmRabEstFailInvalidRabId

Source Section

UtranCell

pmRabEstFailInvalidRabParamComb

Invalid RAB Parameters Combination. Step counter when RANAP RAB Assignment Response is received and cause = Invalid RAB Parameters Combination.

Data Source

GPEH P4

Source Field

pmRabEstFailInvalidRabParamComb

Source Section

UtranCell

pmRabEstFailInvalidRabParamValue

Invalid RAB Parameters Value. Step counter when RANAP RAB Assignment Response is received and cause = Invalid RAB Parameters Value. Step counter once from each RAB failed to be setup or modified.

Data Source

GPEH P4

Source Field

pmRabEstFailInvalidRabParamValue

Source Section

UtranCell

pmRabEstFailIuUPFail

Release due to Iu User Plane Failure. Step counter when RANAP RAB Assignment Response is received and cause = Iu User Plane Failure.

Data Source

GPEH P4

Source Field

pmRabEstFailIuUPFail

Source Section

UtranCell

pmRabEstFailMaxBitRateDlUnavail

Requested Maximum Bit Rate for DL not Available. Step counter when RANAP RAB Assignment Response is received and cause = Release due to Requested Maximum Bit Rate for DL not Available.

Data Source

GPEH P4

Source Field

pmRabEstFailMaxBitRateDlUnavail

Source Section

UtranCell

pmRabEstFailMaxBitRateUlUnavail

Requested Maximum Bit Rate for UL not Available. Step counter when RANAP RAB Assignment Response is received and cause = Release due to Requested Maximum Bit Rate for UL not Available.

Data Source

GPEH P4

Source Field

pmRabEstFailMaxBitRateUlUnavail

Source Section

UtranCell

pmRabEstFailNoResource

Release due to No Resource Available. Step counter when RANAP RAB Assignment Response is received and cause = No Resource Available.

© Copyright IBM Corp. 2008, 2009. All Rights Reserved.

Data Source

GPEH P4

Source Field

pmRabEstFailNoResource

Source Section

UtranCell

pmRabEstFailTrafficClassUnavail

Requested Traffic Class not Available. Step counter when RANAP RAB Assignment Response is received and cause = Requested Traffic Class not Available. Step counter once from each RAB failed to be setup or modified.

Data Source

GPEH P4

Source Field

pmRabEstFailTrafficClassUnavail

Source Section

UtranCell

pmRabEstFailTransferDelay

Requested Transfer Delay not Achievable. Step counter when RANAP RAB Assignment Response is received and cause = Requested Transfer Delay not Achievable.

Data Source

GPEH P4

Source Field

pmRabEstFailTransferDelay

Source Section

UtranCell

pmRabEstFailUPNoSupport

User Plane Versions not Supported. Step counter when RANAP RAB Assignment Response is received and cause = User Plane Versions not Supported.

Data Source

GPEH P4

Source Field

pmRabEstFailUPNoSupport

Source Section

UtranCell

pmRabEstFailVioGuarBitRate

Condition Violation for Guaranteed Bit Rate. Step counter when RANAP RAB Assignment Response is received and cause = Condition Violation for Guaranteed Bit Rate.

Data Source

GPEH P4

Source Field

pmRabEstFailVioGuarBitRate

Source Section

UtranCell

pmRabEstFailVioSduParam

Condition Violation for SDU Parameters. Step counter when RANAP RAB Assignment Response is received and cause = Condition Violation for SDU Parameters.

Data Source

GPEH P4

Source Field

pmRabEstFailVioSduParam

Source Section

UtranCell

pmRabEstFailVioTrafficHandlingPrio

Condition Violation for Traffic Handling Priority. Step counter when RANAP RAB Assignment Response is received and cause = Condition Violation for Traffic Handling Priority.

© Copyright IBM Corp. 2008, 2009. All Rights Reserved.

Data Source

GPEH P4

Source Field

pmRabEstFailVioTrafficHandlingPrio

Source Section

UtranCell

pmRabReleasePsBackground

Call Drop, RRC Establishment Cause: 03-originatingBackgroundCall, 08-terminatingBackgroundCall. Service Type: Packet All

Data Source

GPEH P5MD

Source Field

pmRabReleasePsBackground

Source Section

UtranCell

pmRabReleasePsInteractive

Call Drop, RRC Establishment Cause: 02-originatingInteractiveCall, 07-terminatingInteractiveCall. Service Type: Packet HSDPA (HS)

Data Source

GPEH P5MD

Source Field

pmRabReleasePsInteractive

Source Section

UtranCell

pmRadioBearerEstablishAttempt

RB establishment success rate. The counter is stepped when the RRC Radio Bearer Setup message is sent. The counter shall be stepped once for each Radio Bearer requested to be setup.

Data Source

GPEH P4

Source Field

pmRadioBearerEstablishAttempt

Source Section

UtranCell

pmRadioBearerEstablishSuccess

RB establishment success rate. The counter is stepped when the RRC Radio Bearer Setup Complete message is received. The counter is stepped once for each RB requested to be setup in the preceding RRC Radio Bearer Setup message.

Data Source

GPEH P4

Source Field

pmRadioBearerEstablishSuccess

Source Section

UtranCell

pmRadioBearerReconfigAttempt

RB reconfiguration success rate. The counter is stepped when the RRC Radio Bearer Reconfiguration message is sent.

Data Source

GPEH P4

Source Field

pmRadioBearerReconfigAttempt

Source Section

UtranCell

pmRadioBearerReconfigSuccess

RB reconfiguration success rate. GPEH Event: The counter is stepped when the RRC Radio Bearer Reconfiguration Complete message is received.

© Copyright IBM Corp. 2008, 2009. All Rights Reserved.

Data Source

GPEH P4

Source Field

pmRadioBearerReconfigSuccess

Source Section

UtranCell

pmRanapDiscNormal

Due to a Normal Release. Step counter when RANAP Iu Release Request or RANAP RAB Assignment Request is received and cause = Normal Release.

Data Source

GPEH P4

Source Field

pmRanapDiscNormal

Source Section

UtranCell

pmRes1_0

RES distribution 1 recorded service and measurement quantity (256*service + measurement quantity)

Data Source

RNC

Source Field

pmRes1(0)

Source Section

UtranCell

pmRes1_1

Number of samples for RES distribution 1, subfield 1

Data Source

RNC

Source Field

pmRes1(1)

Source Section

UtranCell

pmRes1_10

Number of samples for RES distribution 1, subfield 10

Data Source

RNC

Source Field

pmRes1(10)

Source Section

UtranCell

pmRes1_11

Number of samples for RES distribution 1, subfield 11

Data Source

RNC

Source Field

pmRes1(11)

Source Section

UtranCell

pmRes1_12

Number of samples for RES distribution 1, subfield 12

Data Source

RNC

© Copyright IBM Corp. 2008, 2009. All Rights Reserved.

Source Field

pmRes1(12)

Source Section

UtranCell

pmRes1_13

Number of samples for RES distribution 1, subfield 13

Data Source

RNC

Source Field

pmRes1(13)

Source Section

UtranCell

pmRes1_14

Number of samples for RES distribution 1, subfield 14

Data Source

RNC

Source Field

pmRes1(14)

Source Section

UtranCell

pmRes1_15

Number of samples for RES distribution 1, subfield 15

Data Source

RNC

Source Field

pmRes1(15)

Source Section

UtranCell

pmRes1_16

Number of samples for RES distribution 1, subfield 16

Data Source

RNC

Source Field

pmRes1(16)

Source Section

UtranCell

pmRes1_17

Number of samples for RES distribution 1, subfield 17

Data Source

RNC

Source Field

pmRes1(17)

Source Section

UtranCell

pmRes1_18

Number of samples for RES distribution 1, subfield 18

Data Source

RNC

Source Field

pmRes1(18)

Source Section

UtranCell

© Copyright IBM Corp. 2008, 2009. All Rights Reserved.

pmRes1_2

Number of samples for RES distribution 1, subfield 2

Data Source

RNC

Source Field

pmRes1(2)

Source Section

UtranCell

pmRes1_3

Number of samples for RES distribution 1, subfield 3

Data Source

RNC

Source Field

pmRes1(3)

Source Section

UtranCell

pmRes1_4

Number of samples for RES distribution 1, subfield 4

Data Source

RNC

Source Field

pmRes1(4)

Source Section

UtranCell

pmRes1_5

Number of samples for RES distribution 1, subfield 5

Data Source

RNC

Source Field

pmRes1(5)

Source Section

UtranCell

pmRes1_6

Number of samples for RES distribution 1, subfield 6

Data Source

RNC

Source Field

pmRes1(6)

Source Section

UtranCell

pmRes1_7

Number of samples for RES distribution 1, subfield 7

Data Source

RNC

Source Field

pmRes1(7)

Source Section

UtranCell

pmRes1_8

Number of samples for RES distribution 1, subfield 8

Data Source

RNC

© Copyright IBM Corp. 2008, 2009. All Rights Reserved.

Source Field

pmRes1(8)

Source Section

UtranCell

pmRes1_9

Number of samples for RES distribution 1, subfield 9

Data Source

RNC

Source Field

pmRes1(9)

Source Section

UtranCell

pmRes10_0

RES distribution 10 recorded service and measurement quantity (256*service + measurement quantity)

Data Source

RNC

Source Field

pmRes10

Source Section

UtranCell

pmRes10_1

Number of samples for RES distribution 10, subfield 1

Data Source

RNC

Source Field

pmRes10

Source Section

UtranCell

pmRes10_10

Number of samples for RES distribution 10, subfield 10

Data Source

RNC

Source Field

pmRes10

Source Section

UtranCell

pmRes10_11

Number of samples for RES distribution 10, subfield 11

Data Source

RNC

Source Field

pmRes10

Source Section

UtranCell

pmRes10_12

Number of samples for RES distribution 10, subfield 12

Data Source

RNC

Source Field

pmRes10

© Copyright IBM Corp. 2008, 2009. All Rights Reserved.

Source Section

UtranCell

pmRes10_13

Number of samples for RES distribution 10, subfield 13

Data Source

RNC

Source Field

pmRes10

Source Section

UtranCell

pmRes10_14

Number of samples for RES distribution 10, subfield 14

Data Source

RNC

Source Field

pmRes10

Source Section

UtranCell

pmRes10_15

Number of samples for RES distribution 10, subfield 15

Data Source

RNC

Source Field

pmRes10

Source Section

UtranCell

pmRes10_16

Number of samples for RES distribution 10, subfield 16

Data Source

RNC

Source Field

pmRes10

Source Section

UtranCell

pmRes10_17

Number of samples for RES distribution 10, subfield 17

Data Source

RNC

Source Field

pmRes10

Source Section

UtranCell

pmRes10_18

Number of samples for RES distribution 10, subfield 18

Data Source

RNC

Source Field

pmRes10

Source Section

UtranCell

pmRes10_2

Number of samples for RES distribution 10, subfield 2

© Copyright IBM Corp. 2008, 2009. All Rights Reserved.

Data Source

RNC

Source Field

pmRes10

Source Section

UtranCell

pmRes10_3

Number of samples for RES distribution 10, subfield 3

Data Source

RNC

Source Field

pmRes10

Source Section

UtranCell

pmRes10_4

Number of samples for RES distribution 10, subfield 4

Data Source

RNC

Source Field

pmRes10

Source Section

UtranCell

pmRes10_5

Number of samples for RES distribution 10, subfield 5

Data Source

RNC

Source Field

pmRes10

Source Section

UtranCell

pmRes10_6

Number of samples for RES distribution 10, subfield 6

Data Source

RNC

Source Field

pmRes10

Source Section

UtranCell

pmRes10_7

Number of samples for RES distribution 10, subfield 7

Data Source

RNC

Source Field

pmRes10

Source Section

UtranCell

pmRes10_8

Number of samples for RES distribution 10, subfield 8

Data Source

RNC

Source Field

pmRes10

© Copyright IBM Corp. 2008, 2009. All Rights Reserved.

Source Section

UtranCell

pmRes10_9

Number of samples for RES distribution 10, subfield 9

Data Source

RNC

Source Field

pmRes10

Source Section

UtranCell

pmRes11_0

RES distribution 11 recorded service and measurement quantity (256*service + measurement quantity)

Data Source

RNC

Source Field

pmRes11

Source Section

UtranCell

pmRes11_1

Number of samples for RES distribution 11, subfield 1

Data Source

RNC

Source Field

pmRes11

Source Section

UtranCell

pmRes11_10

Number of samples for RES distribution 11, subfield 10

Data Source

RNC

Source Field

pmRes11

Source Section

UtranCell

pmRes11_11

Number of samples for RES distribution 11, subfield 11

Data Source

RNC

Source Field

pmRes11

Source Section

UtranCell

pmRes11_12

Number of samples for RES distribution 11, subfield 12

Data Source

RNC

Source Field

pmRes11

Source Section

UtranCell

© Copyright IBM Corp. 2008, 2009. All Rights Reserved.

pmRes11_13

Number of samples for RES distribution 11, subfield 13

Data Source

RNC

Source Field

pmRes11

Source Section

UtranCell

pmRes11_14

Number of samples for RES distribution 11, subfield 14

Data Source

RNC

Source Field

pmRes11

Source Section

UtranCell

pmRes11_15

Number of samples for RES distribution 11, subfield 15

Data Source

RNC

Source Field

pmRes11

Source Section

UtranCell

pmRes11_16

Number of samples for RES distribution 11, subfield 16

Data Source

RNC

Source Field

pmRes11

Source Section

UtranCell

pmRes11_17

Number of samples for RES distribution 11, subfield 17

Data Source

RNC

Source Field

pmRes11

Source Section

UtranCell

pmRes11_18

Number of samples for RES distribution 11, subfield 18

Data Source

RNC

Source Field

pmRes11

Source Section

UtranCell

pmRes11_2

Number of samples for RES distribution 11, subfield 2

Data Source

RNC

© Copyright IBM Corp. 2008, 2009. All Rights Reserved.

Source Field

pmRes11

Source Section

UtranCell

pmRes11_3

Number of samples for RES distribution 11, subfield 3

Data Source

RNC

Source Field

pmRes11

Source Section

UtranCell

pmRes11_4

Number of samples for RES distribution 11, subfield 4

Data Source

RNC

Source Field

pmRes11

Source Section

UtranCell

pmRes11_5

Number of samples for RES distribution 11, subfield 5

Data Source

RNC

Source Field

pmRes11

Source Section

UtranCell

pmRes11_6

Number of samples for RES distribution 11, subfield 6

Data Source

RNC

Source Field

pmRes11

Source Section

UtranCell

pmRes11_7

Number of samples for RES distribution 11, subfield 7

Data Source

RNC

Source Field

pmRes11

Source Section

UtranCell

pmRes11_8

Number of samples for RES distribution 11, subfield 8

Data Source

RNC

Source Field

pmRes11

Source Section

UtranCell

© Copyright IBM Corp. 2008, 2009. All Rights Reserved.

pmRes11_9

Number of samples for RES distribution 11, subfield 9

Data Source

RNC

Source Field

pmRes11

Source Section

UtranCell

pmRes12_0

RES distribution 12 recorded service and measurement quantity (256*service + measurement quantity)

Data Source

RNC

Source Field

pmRes12

Source Section

UtranCell

pmRes12_1

Number of samples for RES distribution 12, subfield 1

Data Source

RNC

Source Field

pmRes12

Source Section

UtranCell

pmRes12_10

Number of samples for RES distribution 12, subfield 10

Data Source

RNC

Source Field

pmRes12

Source Section

UtranCell

pmRes12_11

Number of samples for RES distribution 12, subfield 11

Data Source

RNC

Source Field

pmRes12

Source Section

UtranCell

pmRes12_12

Number of samples for RES distribution 12, subfield 12

Data Source

RNC

Source Field

pmRes12

Source Section

UtranCell

pmRes12_13

Number of samples for RES distribution 12, subfield 13

© Copyright IBM Corp. 2008, 2009. All Rights Reserved.

Data Source

RNC

Source Field

pmRes12

Source Section

UtranCell

pmRes12_14

Number of samples for RES distribution 12, subfield 14

Data Source

RNC

Source Field

pmRes12

Source Section

UtranCell

pmRes12_15

Number of samples for RES distribution 12, subfield 15

Data Source

RNC

Source Field

pmRes12

Source Section

UtranCell

pmRes12_16

Number of samples for RES distribution 12, subfield 16

Data Source

RNC

Source Field

pmRes12

Source Section

UtranCell

pmRes12_17

Number of samples for RES distribution 12, subfield 17

Data Source

RNC

Source Field

pmRes12

Source Section

UtranCell

pmRes12_18

Number of samples for RES distribution 12, subfield 18

Data Source

RNC

Source Field

pmRes12

Source Section

UtranCell

pmRes12_2

Number of samples for RES distribution 12, subfield 2

Data Source

RNC

Source Field

pmRes12

© Copyright IBM Corp. 2008, 2009. All Rights Reserved.

Source Section

UtranCell

pmRes12_3

Number of samples for RES distribution 12, subfield 3

Data Source

RNC

Source Field

pmRes12

Source Section

UtranCell

pmRes12_4

Number of samples for RES distribution 12, subfield 4

Data Source

RNC

Source Field

pmRes12

Source Section

UtranCell

pmRes12_5

Number of samples for RES distribution 12, subfield 5

Data Source

RNC

Source Field

pmRes12

Source Section

UtranCell

pmRes12_6

Number of samples for RES distribution 12, subfield 6

Data Source

RNC

Source Field

pmRes12

Source Section

UtranCell

pmRes12_7

Number of samples for RES distribution 12, subfield 7

Data Source

RNC

Source Field

pmRes12

Source Section

UtranCell

pmRes12_8

Number of samples for RES distribution 12, subfield 8

Data Source

RNC

Source Field

pmRes12

Source Section

UtranCell

pmRes12_9

Number of samples for RES distribution 12, subfield 9

© Copyright IBM Corp. 2008, 2009. All Rights Reserved.

Data Source

RNC

Source Field

pmRes12

Source Section

UtranCell

pmRes2_0

RES distribution 2 recorded service and measurement quantity (256*service + measurement quantity)

Data Source

RNC

Source Field

pmRes2(0)

Source Section

UtranCell

pmRes2_1

Number of samples for RES distribution 2, subfield 1

Data Source

RNC

Source Field

pmRes2(1)

Source Section

UtranCell

pmRes2_10

Number of samples for RES distribution 2, subfield 10

Data Source

RNC

Source Field

pmRes2(10)

Source Section

UtranCell

pmRes2_11

Number of samples for RES distribution 2, subfield 11

Data Source

RNC

Source Field

pmRes2(11)

Source Section

UtranCell

pmRes2_12

Number of samples for RES distribution 2, subfield 12

Data Source

RNC

Source Field

pmRes2(12)

Source Section

UtranCell

pmRes2_13

Number of samples for RES distribution 2, subfield 13

Data Source

RNC

© Copyright IBM Corp. 2008, 2009. All Rights Reserved.

Source Field

pmRes2(13)

Source Section

UtranCell

pmRes2_14

Number of samples for RES distribution 2, subfield 14

Data Source

RNC

Source Field

pmRes2(14)

Source Section

UtranCell

pmRes2_15

Number of samples for RES distribution 2, subfield 15

Data Source

RNC

Source Field

pmRes2(15)

Source Section

UtranCell

pmRes2_16

Number of samples for RES distribution 2, subfield 16

Data Source

RNC

Source Field

pmRes2(16)

Source Section

UtranCell

pmRes2_17

Number of samples for RES distribution 2, subfield 17

Data Source

RNC

Source Field

pmRes2(17)

Source Section

UtranCell

pmRes2_18

Number of samples for RES distribution 2, subfield 18

Data Source

RNC

Source Field

pmRes2(18)

Source Section

UtranCell

pmRes2_2

Number of samples for RES distribution 2, subfield 2

Data Source

RNC

Source Field

pmRes2(2)

Source Section

UtranCell

© Copyright IBM Corp. 2008, 2009. All Rights Reserved.

pmRes2_3

Number of samples for RES distribution 2, subfield 3

Data Source

RNC

Source Field

pmRes2(3)

Source Section

UtranCell

pmRes2_4

Number of samples for RES distribution 2, subfield 4

Data Source

RNC

Source Field

pmRes2(4)

Source Section

UtranCell

pmRes2_5

Number of samples for RES distribution 2, subfield 5

Data Source

RNC

Source Field

pmRes2(5)

Source Section

UtranCell

pmRes2_6

Number of samples for RES distribution 2, subfield 6

Data Source

RNC

Source Field

pmRes2(6)

Source Section

UtranCell

pmRes2_7

Number of samples for RES distribution 2, subfield 7

Data Source

RNC

Source Field

pmRes2(7)

Source Section

UtranCell

pmRes2_8

Number of samples for RES distribution 2, subfield 8

Data Source

RNC

Source Field

pmRes2(8)

Source Section

UtranCell

pmRes2_9

Number of samples for RES distribution 2, subfield 9

Data Source

RNC

© Copyright IBM Corp. 2008, 2009. All Rights Reserved.

Source Field

pmRes2(9)

Source Section

UtranCell

pmRes3_0

RES distribution 3 recorded service and measurement quantity (256*service + measurement quantity)

Data Source

RNC

Source Field

pmRes3(0)

Source Section

UtranCell

pmRes3_1

Number of samples for RES distribution 3, subfield 1

Data Source

RNC

Source Field

pmRes3(1)

Source Section

UtranCell

pmRes3_10

Number of samples for RES distribution 3, subfield 10

Data Source

RNC

Source Field

pmRes3(10)

Source Section

UtranCell

pmRes3_11

Number of samples for RES distribution 3, subfield 11

Data Source

RNC

Source Field

pmRes3(11)

Source Section

UtranCell

pmRes3_12

Number of samples for RES distribution 3, subfield 12

Data Source

RNC

Source Field

pmRes3(12)

Source Section

UtranCell

pmRes3_13

Number of samples for RES distribution 3, subfield 13

Data Source

RNC

Source Field

pmRes3(13)

© Copyright IBM Corp. 2008, 2009. All Rights Reserved.

Source Section

UtranCell

pmRes3_14

Number of samples for RES distribution 3, subfield 14

Data Source

RNC

Source Field

pmRes3(14)

Source Section

UtranCell

pmRes3_15

Number of samples for RES distribution 3, subfield 15

Data Source

RNC

Source Field

pmRes3(15)

Source Section

UtranCell

pmRes3_16

Number of samples for RES distribution 3, subfield 16

Data Source

RNC

Source Field

pmRes3(16)

Source Section

UtranCell

pmRes3_17

Number of samples for RES distribution 3, subfield 17

Data Source

RNC

Source Field

pmRes3(17)

Source Section

UtranCell

pmRes3_18

Number of samples for RES distribution 3, subfield 18

Data Source

RNC

Source Field

pmRes3(18)

Source Section

UtranCell

pmRes3_2

Number of samples for RES distribution 3, subfield 2

Data Source

RNC

Source Field

pmRes3(2)

Source Section

UtranCell

pmRes3_3

Number of samples for RES distribution 3, subfield 3

© Copyright IBM Corp. 2008, 2009. All Rights Reserved.

Data Source

RNC

Source Field

pmRes3(3)

Source Section

UtranCell

pmRes3_4

Number of samples for RES distribution 3, subfield 4

Data Source

RNC

Source Field

pmRes3(4)

Source Section

UtranCell

pmRes3_5

Number of samples for RES distribution 3, subfield 5

Data Source

RNC

Source Field

pmRes3(5)

Source Section

UtranCell

pmRes3_6

Number of samples for RES distribution 3, subfield 6

Data Source

RNC

Source Field

pmRes3(6)

Source Section

UtranCell

pmRes3_7

Number of samples for RES distribution 3, subfield 7

Data Source

RNC

Source Field

pmRes3(7)

Source Section

UtranCell

pmRes3_8

Number of samples for RES distribution 3, subfield 8

Data Source

RNC

Source Field

pmRes3(8)

Source Section

UtranCell

pmRes3_9

Number of samples for RES distribution 3, subfield 9

Data Source

RNC

Source Field

pmRes3(9)

© Copyright IBM Corp. 2008, 2009. All Rights Reserved.

Source Section

UtranCell

pmRes4_0

RES distribution 4 recorded service and measurement quantity (256*service + measurement quantity)

Data Source

RNC

Source Field

pmRes4(0)

Source Section

UtranCell

pmRes4_1

Number of samples for RES distribution 4, subfield 1

Data Source

RNC

Source Field

pmRes4(1)

Source Section

UtranCell

pmRes4_10

Number of samples for RES distribution 4, subfield 10

Data Source

RNC

Source Field

pmRes4(10)

Source Section

UtranCell

pmRes4_11

Number of samples for RES distribution 4, subfield 11

Data Source

RNC

Source Field

pmRes4(11)

Source Section

UtranCell

pmRes4_12

Number of samples for RES distribution 4, subfield 12

Data Source

RNC

Source Field

pmRes4(12)

Source Section

UtranCell

pmRes4_13

Number of samples for RES distribution 4, subfield 13

Data Source

RNC

Source Field

pmRes4(13)

Source Section

UtranCell

© Copyright IBM Corp. 2008, 2009. All Rights Reserved.

pmRes4_14

Number of samples for RES distribution 4, subfield 14

Data Source

RNC

Source Field

pmRes4(14)

Source Section

UtranCell

pmRes4_15

Number of samples for RES distribution 4, subfield 15

Data Source

RNC

Source Field

pmRes4(15)

Source Section

UtranCell

pmRes4_16

Number of samples for RES distribution 4, subfield 16

Data Source

RNC

Source Field

pmRes4(16)

Source Section

UtranCell

pmRes4_17

Number of samples for RES distribution 4, subfield 17

Data Source

RNC

Source Field

pmRes4(17)

Source Section

UtranCell

pmRes4_18

Number of samples for RES distribution 4, subfield 18

Data Source

RNC

Source Field

pmRes4(18)

Source Section

UtranCell

pmRes4_2

Number of samples for RES distribution 4, subfield 2

Data Source

RNC

Source Field

pmRes4(2)

Source Section

UtranCell

pmRes4_3

Number of samples for RES distribution 4, subfield 3

Data Source

RNC

© Copyright IBM Corp. 2008, 2009. All Rights Reserved.

Source Field

pmRes4(3)

Source Section

UtranCell

pmRes4_4

Number of samples for RES distribution 4, subfield 4

Data Source

RNC

Source Field

pmRes4(4)

Source Section

UtranCell

pmRes4_5

Number of samples for RES distribution 4, subfield 5

Data Source

RNC

Source Field

pmRes4(5)

Source Section

UtranCell

pmRes4_6

Number of samples for RES distribution 4, subfield 6

Data Source

RNC

Source Field

pmRes4(6)

Source Section

UtranCell

pmRes4_7

Number of samples for RES distribution 4, subfield 7

Data Source

RNC

Source Field

pmRes4(7)

Source Section

UtranCell

pmRes4_8

Number of samples for RES distribution 4, subfield 8

Data Source

RNC

Source Field

pmRes4(8)

Source Section

UtranCell

pmRes4_9

Number of samples for RES distribution 4, subfield 9

Data Source

RNC

Source Field

pmRes4(9)

Source Section

UtranCell

© Copyright IBM Corp. 2008, 2009. All Rights Reserved.

pmRes5_0

RES distribution 5 recorded service and measurement quantity (256*service + measurement quantity)

Data Source

RNC

Source Field

pmRes5(0)

Source Section

UtranCell

pmRes5_1

Number of samples for RES distribution 5, subfield 1

Data Source

RNC

Source Field

pmRes5(1)

Source Section

UtranCell

pmRes5_10

Number of samples for RES distribution 5, subfield 10

Data Source

RNC

Source Field

pmRes5(10)

Source Section

UtranCell

pmRes5_11

Number of samples for RES distribution 5, subfield 11

Data Source

RNC

Source Field

pmRes5(11)

Source Section

UtranCell

pmRes5_12

Number of samples for RES distribution 5, subfield 12

Data Source

RNC

Source Field

pmRes5(12)

Source Section

UtranCell

pmRes5_13

Number of samples for RES distribution 5, subfield 13

Data Source

RNC

Source Field

pmRes5(13)

Source Section

UtranCell

pmRes5_14

Number of samples for RES distribution 5, subfield 14

© Copyright IBM Corp. 2008, 2009. All Rights Reserved.

Data Source

RNC

Source Field

pmRes5(14)

Source Section

UtranCell

pmRes5_15

Number of samples for RES distribution 5, subfield 15

Data Source

RNC

Source Field

pmRes5(15)

Source Section

UtranCell

pmRes5_16

Number of samples for RES distribution 5, subfield 16

Data Source

RNC

Source Field

pmRes5(16)

Source Section

UtranCell

pmRes5_17

Number of samples for RES distribution 5, subfield 17

Data Source

RNC

Source Field

pmRes5(17)

Source Section

UtranCell

pmRes5_18

Number of samples for RES distribution 5, subfield 18

Data Source

RNC

Source Field

pmRes5(18)

Source Section

UtranCell

pmRes5_2

Number of samples for RES distribution 5, subfield 2

Data Source

RNC

Source Field

pmRes5(2)

Source Section

UtranCell

pmRes5_3

Number of samples for RES distribution 5, subfield 3

Data Source

RNC

Source Field

pmRes5(3)

© Copyright IBM Corp. 2008, 2009. All Rights Reserved.

Source Section

UtranCell

pmRes5_4

Number of samples for RES distribution 5, subfield 4

Data Source

RNC

Source Field

pmRes5(4)

Source Section

UtranCell

pmRes5_5

Number of samples for RES distribution 5, subfield 5

Data Source

RNC

Source Field

pmRes5(5)

Source Section

UtranCell

pmRes5_6

Number of samples for RES distribution 5, subfield 6

Data Source

RNC

Source Field

pmRes5(6)

Source Section

UtranCell

pmRes5_7

Number of samples for RES distribution 5, subfield 7

Data Source

RNC

Source Field

pmRes5(7)

Source Section

UtranCell

pmRes5_8

Number of samples for RES distribution 5, subfield 8

Data Source

RNC

Source Field

pmRes5(8)

Source Section

UtranCell

pmRes5_9

Number of samples for RES distribution 5, subfield 9

Data Source

RNC

Source Field

pmRes5(9)

Source Section

UtranCell

© Copyright IBM Corp. 2008, 2009. All Rights Reserved.

pmRes6_0

RES distribution 6 recorded service and measurement quantity (256*service + measurement quantity)

Data Source

RNC

Source Field

pmRes6(0)

Source Section

UtranCell

pmRes6_1

Number of samples for RES distribution 6, subfield 1

Data Source

RNC

Source Field

pmRes6(1)

Source Section

UtranCell

pmRes6_10

Number of samples for RES distribution 6, subfield 10

Data Source

RNC

Source Field

pmRes6(10)

Source Section

UtranCell

pmRes6_11

Number of samples for RES distribution 6, subfield 11

Data Source

RNC

Source Field

pmRes6(11)

Source Section

UtranCell

pmRes6_12

Number of samples for RES distribution 6, subfield 12

Data Source

RNC

Source Field

pmRes6(12)

Source Section

UtranCell

pmRes6_13

Number of samples for RES distribution 6, subfield 13

Data Source

RNC

Source Field

pmRes6(13)

Source Section

UtranCell

pmRes6_14

Number of samples for RES distribution 6, subfield 14

© Copyright IBM Corp. 2008, 2009. All Rights Reserved.

Data Source

RNC

Source Field

pmRes6(14)

Source Section

UtranCell

pmRes6_15

Number of samples for RES distribution 6, subfield 15

Data Source

RNC

Source Field

pmRes6(15)

Source Section

UtranCell

pmRes6_16

Number of samples for RES distribution 6, subfield 16

Data Source

RNC

Source Field

pmRes6(16)

Source Section

UtranCell

pmRes6_17

Number of samples for RES distribution 6, subfield 17

Data Source

RNC

Source Field

pmRes6(17)

Source Section

UtranCell

pmRes6_18

Number of samples for RES distribution 6, subfield 18

Data Source

RNC

Source Field

pmRes6(18)

Source Section

UtranCell

pmRes6_2

Number of samples for RES distribution 6, subfield 2

Data Source

RNC

Source Field

pmRes6(2)

Source Section

UtranCell

pmRes6_3

Number of samples for RES distribution 6, subfield 3

Data Source

RNC

Source Field

pmRes6(3)

© Copyright IBM Corp. 2008, 2009. All Rights Reserved.

Source Section

UtranCell

pmRes6_4

Number of samples for RES distribution 6, subfield 4

Data Source

RNC

Source Field

pmRes6(4)

Source Section

UtranCell

pmRes6_5

Number of samples for RES distribution 6, subfield 5

Data Source

RNC

Source Field

pmRes6(5)

Source Section

UtranCell

pmRes6_6

Number of samples for RES distribution 6, subfield 6

Data Source

RNC

Source Field

pmRes6(6)

Source Section

UtranCell

pmRes6_7

Number of samples for RES distribution 6, subfield 7

Data Source

RNC

Source Field

pmRes6(7)

Source Section

UtranCell

pmRes6_8

Number of samples for RES distribution 6, subfield 8

Data Source

RNC

Source Field

pmRes6(8)

Source Section

UtranCell

pmRes6_9

Number of samples for RES distribution 6, subfield 9

Data Source

RNC

Source Field

pmRes6(9)

Source Section

UtranCell

© Copyright IBM Corp. 2008, 2009. All Rights Reserved.

pmRes7_0

RES distribution 7 recorded service and measurement quantity (256*service + measurement quantity)

Data Source

RNC

Source Field

pmRes7

Source Section

UtranCell

pmRes7_1

Number of samples for RES distribution 7, subfield 1

Data Source

RNC

Source Field

pmRes7

Source Section

UtranCell

pmRes7_10

Number of samples for RES distribution 7, subfield 10

Data Source

RNC

Source Field

pmRes7

Source Section

UtranCell

pmRes7_11

Number of samples for RES distribution 7, subfield 11

Data Source

RNC

Source Field

pmRes7

Source Section

UtranCell

pmRes7_12

Number of samples for RES distribution 7, subfield 12

Data Source

RNC

Source Field

pmRes7

Source Section

UtranCell

pmRes7_13

Number of samples for RES distribution 7, subfield 13

Data Source

RNC

Source Field

pmRes7

Source Section

UtranCell

pmRes7_14

Number of samples for RES distribution 7, subfield 14

© Copyright IBM Corp. 2008, 2009. All Rights Reserved.

Data Source

RNC

Source Field

pmRes7

Source Section

UtranCell

pmRes7_15

Number of samples for RES distribution 7, subfield 15

Data Source

RNC

Source Field

pmRes7

Source Section

UtranCell

pmRes7_16

Number of samples for RES distribution 7, subfield 16

Data Source

RNC

Source Field

pmRes7

Source Section

UtranCell

pmRes7_17

Number of samples for RES distribution 7, subfield 17

Data Source

RNC

Source Field

pmRes7

Source Section

UtranCell

pmRes7_18

Number of samples for RES distribution 7, subfield 18

Data Source

RNC

Source Field

pmRes7

Source Section

UtranCell

pmRes7_2

Number of samples for RES distribution 7, subfield 2

Data Source

RNC

Source Field

pmRes7

Source Section

UtranCell

pmRes7_3

Number of samples for RES distribution 7, subfield 3

Data Source

RNC

Source Field

pmRes7

© Copyright IBM Corp. 2008, 2009. All Rights Reserved.

Source Section

UtranCell

pmRes7_4

Number of samples for RES distribution 7, subfield 4

Data Source

RNC

Source Field

pmRes7

Source Section

UtranCell

pmRes7_5

Number of samples for RES distribution 7, subfield 5

Data Source

RNC

Source Field

pmRes7

Source Section

UtranCell

pmRes7_6

Number of samples for RES distribution 7, subfield 6

Data Source

RNC

Source Field

pmRes7

Source Section

UtranCell

pmRes7_7

Number of samples for RES distribution 7, subfield 7

Data Source

RNC

Source Field

pmRes7

Source Section

UtranCell

pmRes7_8

Number of samples for RES distribution 7, subfield 8

Data Source

RNC

Source Field

pmRes7

Source Section

UtranCell

pmRes7_9

Number of samples for RES distribution 7, subfield 9

Data Source

RNC

Source Field

pmRes7

Source Section

UtranCell

© Copyright IBM Corp. 2008, 2009. All Rights Reserved.

pmRes8_0

RES distribution 8 recorded service and measurement quantity (256*service + measurement quantity)

Data Source

RNC

Source Field

pmRes8

Source Section

UtranCell

pmRes8_1

Number of samples for RES distribution 8, subfield 1

Data Source

RNC

Source Field

pmRes8

Source Section

UtranCell

pmRes8_10

Number of samples for RES distribution 8, subfield 10

Data Source

RNC

Source Field

pmRes8

Source Section

UtranCell

pmRes8_11

Number of samples for RES distribution 8, subfield 11

Data Source

RNC

Source Field

pmRes8

Source Section

UtranCell

pmRes8_12

Number of samples for RES distribution 8, subfield 12

Data Source

RNC

Source Field

pmRes8

Source Section

UtranCell

pmRes8_13

Number of samples for RES distribution 8, subfield 13

Data Source

RNC

Source Field

pmRes8

Source Section

UtranCell

pmRes8_14

Number of samples for RES distribution 8, subfield 14

© Copyright IBM Corp. 2008, 2009. All Rights Reserved.

Data Source

RNC

Source Field

pmRes8

Source Section

UtranCell

pmRes8_15

Number of samples for RES distribution 8, subfield 15

Data Source

RNC

Source Field

pmRes8

Source Section

UtranCell

pmRes8_16

Number of samples for RES distribution 8, subfield 16

Data Source

RNC

Source Field

pmRes8

Source Section

UtranCell

pmRes8_17

Number of samples for RES distribution 8, subfield 17

Data Source

RNC

Source Field

pmRes8

Source Section

UtranCell

pmRes8_18

Number of samples for RES distribution 8, subfield 18

Data Source

RNC

Source Field

pmRes8

Source Section

UtranCell

pmRes8_2

Number of samples for RES distribution 8, subfield 2

Data Source

RNC

Source Field

pmRes8

Source Section

UtranCell

pmRes8_3

Number of samples for RES distribution 8, subfield 3

Data Source

RNC

Source Field

pmRes8

© Copyright IBM Corp. 2008, 2009. All Rights Reserved.

Source Section

UtranCell

pmRes8_4

Number of samples for RES distribution 8, subfield 4

Data Source

RNC

Source Field

pmRes8

Source Section

UtranCell

pmRes8_5

Number of samples for RES distribution 8, subfield 5

Data Source

RNC

Source Field

pmRes8

Source Section

UtranCell

pmRes8_6

Number of samples for RES distribution 8, subfield 6

Data Source

RNC

Source Field

pmRes8

Source Section

UtranCell

pmRes8_7

Number of samples for RES distribution 8, subfield 7

Data Source

RNC

Source Field

pmRes8

Source Section

UtranCell

pmRes8_8

Number of samples for RES distribution 8, subfield 8

Data Source

RNC

Source Field

pmRes8

Source Section

UtranCell

pmRes8_9

Number of samples for RES distribution 8, subfield 9

Data Source

RNC

Source Field

pmRes8

Source Section

UtranCell

© Copyright IBM Corp. 2008, 2009. All Rights Reserved.

pmRes9_0

RES distribution 9 recorded service and measurement quantity (256*service + measurement quantity)

Data Source

RNC

Source Field

pmRes9

Source Section

UtranCell

pmRes9_1

Number of samples for RES distribution 9, subfield 1

Data Source

RNC

Source Field

pmRes9

Source Section

UtranCell

pmRes9_10

Number of samples for RES distribution 9, subfield 10

Data Source

RNC

Source Field

pmRes9

Source Section

UtranCell

pmRes9_11

Number of samples for RES distribution 9, subfield 11

Data Source

RNC

Source Field

pmRes9

Source Section

UtranCell

pmRes9_12

Number of samples for RES distribution 9, subfield 12

Data Source

RNC

Source Field

pmRes9

Source Section

UtranCell

pmRes9_13

Number of samples for RES distribution 9, subfield 13

Data Source

RNC

Source Field

pmRes9

Source Section

UtranCell

pmRes9_14

Number of samples for RES distribution 9, subfield 14

© Copyright IBM Corp. 2008, 2009. All Rights Reserved.

Data Source

RNC

Source Field

pmRes9

Source Section

UtranCell

pmRes9_15

Number of samples for RES distribution 9, subfield 15

Data Source

RNC

Source Field

pmRes9

Source Section

UtranCell

pmRes9_16

Number of samples for RES distribution 9, subfield 16

Data Source

RNC

Source Field

pmRes9

Source Section

UtranCell

pmRes9_17

Number of samples for RES distribution 9, subfield 17

Data Source

RNC

Source Field

pmRes9

Source Section

UtranCell

pmRes9_18

Number of samples for RES distribution 9, subfield 18

Data Source

RNC

Source Field

pmRes9

Source Section

UtranCell

pmRes9_2

Number of samples for RES distribution 9, subfield 2

Data Source

RNC

Source Field

pmRes9

Source Section

UtranCell

pmRes9_3

Number of samples for RES distribution 9, subfield 3

Data Source

RNC

Source Field

pmRes9

© Copyright IBM Corp. 2008, 2009. All Rights Reserved.

Source Section

UtranCell

pmRes9_4

Number of samples for RES distribution 9, subfield 4

Data Source

RNC

Source Field

pmRes9

Source Section

UtranCell

pmRes9_5

Number of samples for RES distribution 9, subfield 5

Data Source

RNC

Source Field

pmRes9

Source Section

UtranCell

pmRes9_6

Number of samples for RES distribution 9, subfield 6

Data Source

RNC

Source Field

pmRes9

Source Section

UtranCell

pmRes9_7

Number of samples for RES distribution 9, subfield 7

Data Source

RNC

Source Field

pmRes9

Source Section

UtranCell

pmRes9_8

Number of samples for RES distribution 9, subfield 8

Data Source

RNC

Source Field

pmRes9

Source Section

UtranCell

pmRes9_9

Number of samples for RES distribution 9, subfield 9

Data Source

RNC

Source Field

pmRes9

Source Section

UtranCell

© Copyright IBM Corp. 2008, 2009. All Rights Reserved.

pmRlAddAttemptsBestCellCsConvers

Number Radio Link additions attempted for conversational 64 Kbps CS RAB where this cell is the source cell and the best cell in the active set

Source Field

pmRlAddAttemptsBestCellCsConvers

Source Section

UtranCell

pmRlAddAttemptsBestCellPacketHigh

Number Radio Link additions attempted for interactive PS RAB with data rate higher than 64 Kbps where this cell is the source cell and the best cell in the active set

Source Field

pmRlAddAttemptsBestCellPacketHigh

Source Section

UtranCell

pmRlAddAttemptsBestCellPacketLow

Number of attempted radio link additions for low-rate packet RABs (radio connections in states with low-rate packet connections: Packet64/64; Speech + Packet 64kpbs; and PS Streaming)

Source Field

pmRlAddAttemptsBestCellPacketLow

Source Section

UtranCell

pmRlAddAttemptsBestCellSpeech

Number Radio Link additions attempted for speech 12.2 Kbps CS RAB where this cell is the source cell and the best cell in the active set

Source Field

pmRlAddAttemptsBestCellSpeech

Source Section

UtranCell

pmRlAddAttemptsBestCellStandAlone

Number Radio Link additions attempted for RRC only connections where this cell is the source cell and best cell in the active set

Source Field

pmRlAddAttemptsBestCellStandAlone

Source Section

UtranCell

pmRlAddAttemptsBestCellStream

Number of radio link additions attempted for streaming RABs (radio connections in states with streaming connections: 57kpbs CS data, variable rate, PS Streaming 16/64 + Packet 8kpbs, and PS Streaming 16/128 + Packet 8Kbps)

Source Field

pmRlAddAttemptsBestCellStream

Source Section

UtranCell

pmRlAddSuccessBestCellCsConvers

Number Radio Link additions for conversational 64 Kbps CS RAB that succeeded where this cell is the source cell and the best cell in the active set

Source Field

pmRlAddSuccessBestCellCsConvers

Source Section

UtranCell

pmRlAddSuccessBestCellPacketHigh

Number Radio Link additions for interactive PS RAB with data rate higher than 64 Kbps that succeeded where this cell is the source cell and the best cell in the active set

Source Field

pmRlAddSuccessBestCellPacketHigh

© Copyright IBM Corp. 2008, 2009. All Rights Reserved.

Source Section

UtranCell

pmRlAddSuccessBestCellPacketLow

Number of succeeded radio link additions for low-rate packet RABs (radio connections in states with low rate packet connections: Packet 64/64; Speech + packet 64Kbps; and PS Streaming)

Source Field

pmRlAddSuccessBestCellPacketLow

Source Section

UtranCell

pmRlAddSuccessBestCellSpeech

Number Radio Link additions for speech 12.2 kbps CS RAB that succeeded where this cell is the source cell and the best cell in the active set

Data Source

NodeB_RNC_RXI

Source Field

pmRlAddSuccessBestCellSpeech

Source Section

UtranCell

pmRlAddSuccessBestCellStandAlone

Number Radio Link additions for RRC only connections that succeeded where this cell is the source cell and the best cell in the active set

Source Field

pmRlAddSuccessBestCellStandAlone

Source Section

UtranCell

pmRlAddSuccessBestCellStream

Number of radio link additions succeeded for streaming RABs (radio connections in states with streaming connections: 57kpbs CS data, variable rate, PS Streaming 16/64 + Packet 8kpbs, and PS Streaming 16/128 + Packet 8Kbps)

Source Field

pmRlAddSuccessBestCellStream

Source Section

UtranCell

pmRrcEstablishAttemptBackground

RRC Connection Request Attempts. RRC Establishment Cause: 03-originatingBackgroundCall, 08-terminatingBackgroundCall

Data Source

GPEH P5MD

Source Field

pmRrcEstablishAttemptBackground

Source Section

UtranCell

pmRrcEstablishAttemptConvers

RRC Connection Request Attempts. RRC Establishment Cause: 00-originatingConversationalCall, 05-terminatingConversationalCall

Data Source

GPEH P5MD

Source Field

pmRrcEstablishAttemptConvers

Source Section

UtranCell

© Copyright IBM Corp. 2008, 2009. All Rights Reserved.

pmRrcEstablishAttemptInteractive

RRC Connection Request Attempts. RRC Establishment Cause: 02-originatingInteractiveCall, 07-terminatingInteractiveCall

Data Source

GPEH P5MD

Source Field

pmRrcEstablishAttemptInteractive

Source Section

UtranCell

pmRrcEstablishAttemptStream

RRC Connection Request Attempts. RRC Establishment Cause: 01-originatingStreamingCall, 06-terminatingStreamingCall

Data Source

GPEH P5MD

Source Field

pmRrcEstablishAttemptStream

Source Section

UtranCell

pmRrcEstablishSuccessBackground

RRC Connection Request Success. RRC Establishment Cause: 03-originatingBackgroundCall, 08-terminatingBackgroundCall

Data Source

GPEH P5MD

Source Field

pmRrcEstablishSuccessBackground

Source Section

UtranCell

pmRrcEstablishSuccessConvers

RRC Connection Request Success. RRC Establishment Cause: 00-originatingConversationalCall, 05-terminatingConversationalCall

Data Source

GPEH P5MD

Source Field

pmRrcEstablishSuccessConvers

Source Section

UtranCell

pmRrcEstablishSuccessInteractive

RRC Connection Request Success. RRC Establishment Cause: 02-originatingInteractiveCall, 07-terminatingInteractiveCall

Data Source

GPEH P5MD

Source Field

pmRrcEstablishSuccessInteractive

Source Section

UtranCell

pmRrcEstablishSuccessStream

RRC Connection Request Success. RRC Establishment Cause: 01-originatingStreamingCall, 06-terminatingStreamingCall

Data Source

GPEH P5MD

Source Field

pmRrcEstablishSuccessStream

Source Section

UtranCell

© Copyright IBM Corp. 2008, 2009. All Rights Reserved.

pmSampBestAmrNbMmRabEst

Number of samples recorded within the ROP for pmSumBestAmrNbMmRabEstablish.

Data Source

RNC

Source Field

pmSamplesBestAmrNbMmRabEstablish

Source Section

UtranCell

pmSamplesActDlRlcTotPacketThp

(Retired on P6)Number of samples in pmSumActDlRlcTotPacketThp (i.e. pmSamplesActDlRlcTotPacketThp = pmSamplesActDlRlcTotPacketThp +1, whenever pmSumActDlRlcTotPacketThp is to be updated).

Data Source

RNC

Source Field

pmSamplesActDlRlcTotPacketThp

Source Section

UtranCell

pmSamplesActDlRlcUserPacketThp

(Retired on P6)Number of samples in pmSumActDlRlcUserPacketThp (i.e. pmSamplesActDlRlcUserPacketThp = pmSamplesActDlRlcUserPacketThp +1, whenever pmSumActDlRlcUserPacketThp is to be updated).

Data Source

RNC

Source Field

pmSamplesActDlRlcUserPacketThp

Source Section

UtranCell

pmSamplesActiveUesBestCell

Number of samples recorded within the ROP for pmSumActiveUesBestCell.

Data Source

RNC

Source Field

pmSamplesActiveUesBestCell

Source Section

UtranCell

pmSamplesActUlRlcTotPacketThp

(Retired on P6)Number of samples in pmSumActUlRlcTotPacketThp (i.e. pmSamplesActUlRlcTotPacketThp = pmSamplesActUlRlcTotPacketThp +1, whenever pmSumActUlRlcTotPacketThp is to be updated, this means if no data is transmitted the counter is not incremented)

Data Source

RNC

Source Field

pmSamplesActUlRlcTotPacketThp

Source Section

UtranCell

pmSamplesActUlRlcUserPacketThp

(Retired on P6)Number of samples in pmSumActUlRlcUserPacketThp (i.e. pmSamplesActUlRlcUserPacketThp = pmSamplesActUlRlcUserPacketThp +1, whenever pmSumActUlRlcUserPacketThp is to be updated).

Data Source

RNC

Source Field

pmSamplesActUlRlcUserPacketThp

© Copyright IBM Corp. 2008, 2009. All Rights Reserved.

Source Section

UtranCell

pmSamplesAmr12200RabEstablish

Number of samples recorded within the ROP period for 'Number of Speech AMR12200 RABs established'.

Data Source

RNC

Source Field

pmSamplesAmr12200RabEstablish

Source Section

UtranCell

pmSamplesAmr4750RabEstablish

Number of samples recorded within the ROP period for 'Number of Speech AMR4750 RABs established'.

Data Source

RNC

Source Field

pmSamplesAmr4750RabEstablish

Source Section

UtranCell

pmSamplesAmr5900RabEstablish

Number of samples recorded within the ROP period for 'Number of Speech AMR5900 RABs established'.

Data Source

RNC

Source Field

pmSamplesAmr5900RabEstablish

Source Section

UtranCell

pmSamplesAmr7950RabEstablish

Number of samples recorded within the ROP period for 'Number of Speech AMR7950 RABs established'.

Data Source

RNC

Source Field

pmSamplesAmr7950RabEstablish

Source Section

UtranCell

pmSamplesAmrNbMmRabEstablish

Number of samples recorded within the ROP for pmSumAmrNbMmRabEstablish.

Data Source

RNC

Source Field

pmSamplesAmrNbMmRabEstablish

Source Section

UtranCell

pmSamplesAmrWbRabEstablish

Number of samples recorded within the ROP period for number of active AMRWB RABs per cell .

Data Source

RNC

Source Field

pmSamplesAmrWbRabEstablish

© Copyright IBM Corp. 2008, 2009. All Rights Reserved.

Source Section

UtranCell

pmSamplesBestAmr12200RabEstablish

Number of samples recorded within the ROP period for 'Number of Speech AMR12200 RABs established' for the best cell in the Active Set.

Data Source

RNC

Source Field

pmSamplesBestAmr12200RabEstablish

Source Section

UtranCell

pmSamplesBestAmr4750RabEstablish

Number of samples recorded within the ROP period for 'Number of Speech AMR4750 RABs established' for the best cell in the Active Set.

Data Source

RNC

Source Field

pmSamplesBestAmr4750RabEstablish

Source Section

UtranCell

pmSamplesBestAmr5900RabEstablish

Number of samples recorded within the ROP period for 'Number of Speech AMR5900 RABs established' for the best cell in the Active Set.

Data Source

RNC

Source Field

pmSamplesBestAmr5900RabEstablish

Source Section

UtranCell

pmSamplesBestAmr7950RabEstablish

Number of samples recorded within the ROP period for 'Number of Speech AMR7950 RABs established' for the best cell in the Active Set.

Data Source

RNC

Source Field

pmSamplesBestAmr7950RabEstablish

Source Section

UtranCell

pmSamplesBestAmrWbRabEstablish

Number of samples recorded within the ROP period for number of active AMRWB RABs per best cell.

Data Source

RNC

Source Field

pmSamplesBestAmrWbRabEstablish

Source Section

UtranCell

pmSamplesBestCs12Establish

Number of samples recorded within the ROP period for 'number of distinct CS speech users', referred to the best cell in the Active Set

Data Source

NodeB_RNC_RXI

Source Field

pmSamplesBestCs12Establish

© Copyright IBM Corp. 2008, 2009. All Rights Reserved.

Source Section

UtranCell

pmSamplesBestCs12PsIntRabEstablish

Number of samples recorded within the ROP period for 'Number of PS Interactive + Speech multi-RABs established, regardless of PS rate', for the best cell in the Active Set.

Data Source

RNC

Source Field

pmSamplesBestCs12PsIntRabEstablish

Source Section

UtranCell

pmSamplesBestCs57RabEstablish

Number of samples recorded within the ROP period for 'Number of streaming 57.6 kbit CS RABs established', for the best cell in the Active Set.

Data Source

RNC

Source Field

pmSamplesBestCs57RabEstablish

Source Section

UtranCell

pmSamplesBestCs64PsIntRabEstablish

Number of samples recorded within the ROP period for 'Number of PS Interactive + conversational 64 kbps CS multi- RABs established', for the best cell in the Active Set.

Data Source

RNC

Source Field

pmSamplesBestCs64PsIntRabEstablish

Source Section

UtranCell

pmSamplesBestCs64RabEstablish

Number of samples recorded within the ROP period for 'Number of conversational 64 kbit CS RABs established', for the best cell in the Active Set.

Data Source

RNC

Source Field

pmSamplesBestCs64RabEstablish

Source Section

UtranCell

pmSamplesBestDchPsIntRabEstablish

Number of samples recorded within the ROP period for 'Number of PS Interactive RABs established, regardless of rate', for the best cell in the Active Set.

Data Source

RNC

Source Field

pmSamplesBestDchPsIntRabEstablish

Source Section

UtranCell

pmSamplesBestPsEulRabEstablish

Stepped every time the corresponding sum counter of the best cell, pmSumBestPsEulRabEstablish, is incremented.

Data Source

RNC

Source Field

pmSamplesBestPsEulRabEstablish

© Copyright IBM Corp. 2008, 2009. All Rights Reserved.

Source Section

UtranCell

pmSamplesBestPsHsAdchRabEstablish

Number of samples recorded within the ROP period for 'Number of A-DCHs established in the cell which is the best cell in the active set'.

Data Source

RNC

pmSamplesBestPsStr128Ps8RabEstablish

Number of samples recorded within the ROP period for 'Number of PS Streaming 16/128 + Packet 8kbps PS multi- RABs established referred to the best cell in the AS.

Data Source

RNC

Source Field

pmSamplesBestPsStr128Ps8RabEstablish

Source Section

UtranCell

pmSamplesBestPsStr64Ps8RabEstablish

Number of samples recorded within the ROP period for 'Number of PS Streaming 16/64 + Packet 8kbps PS multiRABs established referred to the best cell in the AS'

Data Source

RNC

Source Field

pmSamplesBestPsStr64Ps8RabEstablish

Source Section

UtranCell

pmSamplesBestPsStreamHsRabEst

Number of samples in pmSumBestPsStreamHsRabEst (that is, pmSamplesBestPsStreamHsRabEst = pmSamplesBestPsStreamHsRabEst +1, whenever pmSampleBestPsStreamHsRabEst is to be updated).

Data Source

RNC

Source Field

pmSamplesBestPsStreamHsRabEst

Source Section

UtranCell

pmSamplesBestRrcOnlyEstablish

Number of samples recorded within the ROP for pmSumBestRrcOnlyEstablish.

Data Source

RNC

Source Field

pmSamplesBestRrcOnlyEstablish

Source Section

UtranCell

pmSamplesBestSrbOnly34

Number of samples recorded within the ROP for pmSumBestSrbOnly34.

Data Source

RNC

Source Field

pmSamplesBestSrbOnly34

Source Section

UtranCell

© Copyright IBM Corp. 2008, 2009. All Rights Reserved.

pmSamplesCompMode

Number of samples during ROP for Compressed mode users.

Data Source

NodeB_RNC_RXI

Source Field

pmSamplesCompMode

Source Section

UtranCell

pmSamplesCs12Ps0RabEstablish

Number of samples recorded within the ROP period for number of active speech CS plus 0/0 PS multi RABs established

Data Source

NodeB_RNC_RXI

Source Field

pmSamplesCs12Ps0RabEstablish

Source Section

UtranCell

pmSamplesCs12Ps64RabEstablish

Number of samples recorded within the ROP period for number of active speech CS plus 64/64 kbps PS multi RABs.

Data Source

NodeB_RNC_RXI

Source Field

pmSamplesCs12Ps64RabEstablish

Source Section

UtranCell

pmSamplesCs12RabEstablish

Number of samples recorded within the ROP period for number of active speech 12.2 kbps RABs.

Data Source

NodeB_RNC_RXI

Source Field

pmSamplesCs12RabEstablish

Source Section

UtranCell

pmSamplesCs57RabEstablish

Number of samples recorded within the ROP period for number of streaming 57.6 kbps CS RABs established

Data Source

NodeB_RNC_RXI

Source Field

pmSamplesCs57RabEstablish

Source Section

UtranCell

pmSamplesCs64Ps8RabEstablish

Number of samples recorded in the ROP period for the multi RAB UDI+8/8

Data Source

RNC

Source Field

pmSamplesCs64Ps8RabEstablish

Source Section

UtranCell

© Copyright IBM Corp. 2008, 2009. All Rights Reserved.

pmSamplesCs64RabEstablish

Number of samples recorded within the ROP period for number of conversational 64 kbps CS RABs established

Data Source

NodeB_RNC_RXI

Source Field

pmSamplesCs64RabEstablish

Source Section

UtranCell

pmSamplesDchDlRlcTotPacketThp

Number of samples in pmSumDchDlRlcTotPacketThp (i.e. pmSamplesDchDlRlcTotPacketThp= pmSamplesDchDlRlcTotPacketThp+1, whenever pmSumDchDlRlcTotPacketThp is to be updated).

Data Source

RNC

Source Field

pmSamplesDchDlRlcTotPacketThp

Source Section

UtranCell

pmSamplesDchDlRlcUserPacketThp

Number of samples in pmSumDchDlRlcUserPacketThp (i.e. pmSamplesDchDlRlcUserPacketThp = pmSamplesDchDlRlcUserPacketThp +1, whenever pmSumDchDlRlcUserPacketThp is to be updated).

Data Source

RNC

Source Field

pmSamplesDchDlRlcUserPacketThp

Source Section

UtranCell

pmSamplesDchUlRlcTotPacketThp

Number of samples in pmSumDchUlRlcUserPacketThp (i.e. pmSamplesDchUlRlcTotPacketThp= pmSamplesDchUlRlcTotPacketThp+1, whenever pmSumDchUlRlcTotPacketThp is to be updated).

Data Source

RNC

Source Field

pmSamplesDchUlRlcTotPacketThp

Source Section

UtranCell

pmSamplesDchUlRlcUserPacketThp

Number of samples in pmSumDchUlRlcUserPacketThp (i.e. pmSamplesDchUlRlcUserPacketThp = pmSamplesDchUlRlcUserPacketThp +1, whenever pmSumDchUlRlcUserPacketThp is to be updated).

Data Source

RNC

Source Field

pmSamplesDchUlRlcUserPacketThp

Source Section

UtranCell

pmSamplesDlCode

Number of samples in pmSumDlCode (that is, pmSamplesDlCode = pmSamplesDlCode +1, whenever pmSumDlCode is to be updated).

Data Source

RNC

© Copyright IBM Corp. 2008, 2009. All Rights Reserved.

Source Field

pmSamplesDlCode

Source Section

UtranCell

pmSamplesDlRlcUserThpCsConv

Number of samples recorded within the ROP for pmSumDlRlcUserThpCsConv.

Data Source

RNC

Source Field

pmSamplesDlRlcUserThpCsConv

Source Section

UtranCell

pmSamplesDlRlcUserThpCsStream

Number of samples recorded within the ROP for pmSumDlRlcUserThpCsStream.

Data Source

RNC

Source Field

pmSamplesDlRlcUserThpCsStream

Source Section

UtranCell

pmSamplesDlRlcUserThpPsStr128

Number of samples in pmSumDlRlcUserThpPsStream128 (that is, pmSamplesDlRlcUserThpPsStream128 = pmSamplesDlRlcUserThpPsStream128 + 1, whenever pmSumDlRlcUserThpPsStream128 is to be updated)

Data Source

RNC

Source Field

pmSamplesDlRlcUserThpPsStream128

Source Section

UtranCell

pmSamplesDlRlcUserThpPsStr64

Number of samples in pmSumDlRlcUserThpPsStream64 (that is, pmSamplesDlRlcUserThpPsStream64 = pmSamplesDlRlcUserThpPsStream64 + 1, whenever pmSumDlRlcUserThpPsStream64 isto be updated)

Data Source

RNC

Source Field

pmSamplesDlRlcUserThpPsStream64

Source Section

UtranCell

pmSamplesDlRlcUserThpPsStrHs

Number of samples in pmSumDlRlcUserThpPsStreamHs (that is, pmSamplesDlRlcUserThpPsStreamHs = pmSamplesDlRlcUserThpPsStreamHs +1, whenever pmSumDlRlcUserThpPsStreamHs isto be updated).

Data Source

RNC

Source Field

pmSamplesDlRlcUserThpPsStreamHs

Source Section

UtranCell

pmSamplesDlRlcUserThpSpeech

Number of samples recorded within the ROP for pmSumDlRlcUserThpSpeech.

Data Source

RNC

© Copyright IBM Corp. 2008, 2009. All Rights Reserved.

Source Field

pmSamplesDlRlcUserThpSpeech

Source Section

UtranCell

pmSamplesEulRlcTotPacketThp

Number of samples in pmSumEulRlcTotPacketThp (that is, pmSamplesEulRlcTotPacketThp = pmSamplesEulRlcTotPacketThp +1, whenever pmSumEulRlcTotPacketThp is to be updated). Reset at each ROP period.

Data Source

RNC

Source Field

pmSamplesEulRlcTotPacketThp

Source Section

Eul

pmSamplesEulRlcUserPacketThp

Number of samples in pmSumEulRlcUserPacketThp (that is, pmSamplesEulRlcUserPacketThp = pmSamplesEulRlcUserPacketThp +1, whenever pmSumEulRlcUserPacketThp is to be updated). Reset at each ROP period.

Data Source

RNC

Source Field

pmSamplesEulRlcUserPacketThp

Source Section

Eul

pmSamplesFachPsIntRabEstablish

Number of samples recorded within the ROP period for 'Number of PS RABs in state FACH established', for the best cell in the Active Set.

Data Source

RNC

Source Field

pmSamplesFachPsIntRabEstablish

Source Section

UtranCell

pmSamplesHsDlRlcTotPacketThp

Number of samples in pmSumHsDlRlcTotPacketThp (that is, pmSamplesHsDlRlcTotPacketThp = pmSamplesHsDlRlcTotPacketThp +1, whenever pmSumHsDlRlcTotPacketThp is to be updated). Reset at each ROP period.

Data Source

RNC

Source Field

pmSamplesHsDlRlcTotPacketThp

Source Section

Hsdsch

pmSamplesHsDlRlcUserPacketThp

Number of samples in pmSumHsDlRlcUserPacketThp (that is, pmSamplesHsDlRlcUserPacketThp = pmSamplesHsDlRlcUserPacket Thp +1, whenever pmSumHsDlRlcUserPacketThp is to be updated). Reset at each ROP period.

Data Source

RNC

Source Field

pmSamplesHsDlRlcUserPacketThp

Source Section

Hsdsch

© Copyright IBM Corp. 2008, 2009. All Rights Reserved.

pmSamplesPacketDlDelay_0

Number of samples in pmSumPacketDlDelay (that is, pmSamplesPacketDlDelay = pmSamplesPacketDlDelay +1, whenever pmSumPacketDlDelay is to be updated).

Data Source

RNC

Source Field

pmSamplesPacketDlDelay

Source Section

UtranCell

pmSamplesPacketDlDelay_1

Number of samples in pmSumPacketDlDelay (that is, pmSamplesPacketDlDelay = pmSamplesPacketDlDelay +1, whenever pmSumPacketDlDelay is to be updated).

Data Source

RNC

Source Field

pmSamplesPacketDlDelay

Source Section

UtranCell

pmSamplesPacketDlDelay_2

Number of samples in pmSumPacketDlDelay (that is, pmSamplesPacketDlDelay = pmSamplesPacketDlDelay +1, whenever pmSumPacketDlDelay is to be updated).

Data Source

RNC

Source Field

pmSamplesPacketDlDelay

Source Section

UtranCell

pmSamplesPacketLatency_0

Number of samples in pmSumPacketLatency (that is, pmSamplesPacketLatency = pmSamplesPacketLatency +1, whenever pmSumPacketLatency is to be updated).

Data Source

RNC

Source Field

pmSamplesPacketLatency

Source Section

UtranCell

pmSamplesPacketLatency_1

Number of samples in pmSumPacketLatency (that is, pmSamplesPacketLatency = pmSamplesPacketLatency +1, whenever pmSumPacketLatency is to be updated).

Data Source

RNC

Source Field

pmSamplesPacketLatency

Source Section

UtranCell

pmSamplesPacketLatency_2

Number of samples in pmSumPacketLatency (that is, pmSamplesPacketLatency = pmSamplesPacketLatency +1, whenever pmSumPacketLatency is to be updated).

Data Source

RNC

Source Field

pmSamplesPacketLatency

Source Section

UtranCell

© Copyright IBM Corp. 2008, 2009. All Rights Reserved.

pmSamplesPktLatencyPsStrHs_0

Number of samples in pmSumPacketLatencyPsStreamHs (that is, pmSamplesPacketLatencyPsStreamHs = pmSamplesPacketLatencyPsStreamHs +1, whenever pmSumPacketLatencyPsStreamHs is to be updated).

Data Source

RNC

Source Field

pmSamplesPacketLatencyPsStreamHs

Source Section

UtranCell

pmSamplesPktLatencyPsStrHs_1

Number of samples in pmSumPacketLatencyPsStreamHs (that is, pmSamplesPacketLatencyPsStreamHs = pmSamplesPacketLatencyPsStreamHs +1, whenever pmSumPacketLatencyPsStreamHs is to be updated).

Data Source

RNC

Source Field

pmSamplesPacketLatencyPsStreamHs

Source Section

UtranCell

pmSamplesPktLatencyPsStrHs_2

Number of samples in pmSumPacketLatencyPsStreamHs (that is, pmSamplesPacketLatencyPsStreamHs = pmSamplesPacketLatencyPsStreamHs +1, whenever pmSumPacketLatencyPsStreamHs is to be updated).

Data Source

RNC

Source Field

pmSamplesPacketLatencyPsStreamHs

Source Section

UtranCell

pmSamplesPs128RabEstablish

Number of samples recorded within the ROP period for number of 128 kbps PS RABs established- Retired fr 5.0.11.0.0

Data Source

NodeB_RNC_RXI

Source Field

pmSamplesPs128RabEstablish

Source Section

UtranCell

pmSamplesPs384RabEstablish

Number of samples recorded within the ROP period for number of 384 kbps PS RABs established- Retired fr 5.0.11.0.0

Data Source

NodeB_RNC_RXI

Source Field

pmSamplesPs384RabEstablish

Source Section

UtranCell

pmSamplesPs64RabEstablish

Number of samples recorded within the ROP period for number of active PS64 kbps RABs- Retired fr 5.0.11.0.0

Data Source

NodeB_RNC_RXI

Source Field

pmSamplesPs64RabEstablish

© Copyright IBM Corp. 2008, 2009. All Rights Reserved.

Source Section

UtranCell

pmSamplesPsEulRabEstablish

Stepped every time the corresponding sum counter of all cells, pmSumPsEulRabEstablish, is incremented.

Data Source

RNC

Source Field

pmSamplesPsEulRabEstablish

Source Section

UtranCell

pmSamplesPsHsAdchRabEstablish

Number of samples recorded within the ROP period for 'Number of A-DCHs established'.

Data Source

RNC

Source Field

pmSamplesPsHsAdchRabEstablish

Source Section

UtranCell

pmSamplesPsInteractive

Number of samples recorded within the ROP period for 'Number of Interactive PS RABs established excluding RABs on HS configurations or CELL_FACH'.

Data Source

RNC

Source Field

pmSamplesPsInteractive

Source Section

UtranCell

pmSamplesPsStr128Ps8RabEstablish

Number of samples recorded within the ROP period for 'Number of PS Streaming 16/128 + Packet 8kbps PS multi- RABs established'.

Data Source

RNC

Source Field

pmSamplesPsStr128Ps8RabEstablish

Source Section

UtranCell

pmSamplesPsStr64Ps8RabEstablish

Number of samples recorded within the ROP period for number of active PS streaming plus PS8 multi RABs. pmSumPsStr64Ps8RabEstablish/pmSamplesPsStr64Ps8RabEstablish gives the average number of PS Streaming + PS8 multiRABs which were active during a ROP per

Data Source

NodeB_RNC_RXI

Source Field

pmSamplesPsStr64Ps8RabEstablish

Source Section

UtranCell

pmSamplesPsStreamHsRabEst

Number of samples in pmSumPsStreamHsRabEst (that is, pmSamplesPsStreamHsRabEst = pmSamplesPsStreamHsRabEst +1, whenever pmSumPsStreamHsRabEst is to be updated).

Data Source

RNC

Source Field

pmSamplesPsStreamHsRabEst

© Copyright IBM Corp. 2008, 2009. All Rights Reserved.

Source Section

UtranCell

pmSamplesRabFach

(Retired on P6)Number of samples recorded within the ROP for the Number of RABs per FACH channel.

Data Source

NodeB_RNC_RXI

Source Field

pmSamplesRabFach

Source Section

UtranCell

pmSamplesRrcOnlyEstablish

Number of samples recorded within the ROP period for number of active RRC-only connections.

Data Source

NodeB_RNC_RXI

Source Field

pmSamplesRrcOnlyEstablish

Source Section

UtranCell

pmSamplesSf4Ul

Number of samples of the amount of radio links that are on Spreading Factor (SF) = 4 (384 kbps) in UL in a cell during a ROP period.- Retired fr 5.0.11.0.0

Data Source

RNC

Source Field

pmSamplesSf4Ul

Source Section

UtranCell

pmSamplesSrbOnly34

Number of samples recorded within the ROP for pmSumSrbOnly34.

Data Source

RNC

Source Field

pmSamplesSrbOnly34

Source Section

UtranCell

pmSamplesUesWith1Rls1RlInActSet

Number of samples rec within the ROP UEs one RL set & one RL in the active set.

Data Source

NodeB_RNC_RXI

Source Field

pmSamplesUesWith1Rls1RlInActSet

Source Section

UtranCell

pmSamplesUesWith1Rls2RlInActSet

Number of samples rec within ROP for Number of UEs with one RL set & two RLs active set

Data Source

NodeB_RNC_RXI

Source Field

pmSamplesUesWith1Rls2RlInActSet

Source Section

UtranCell

© Copyright IBM Corp. 2008, 2009. All Rights Reserved.

pmSamplesUesWith1Rls3RlInActSet

Number samples rec within the ROP Number UEs with one RL set & three or more RLs active

Data Source

NodeB_RNC_RXI

Source Field

pmSamplesUesWith1Rls3RlInActSet

Source Section

UtranCell

pmSamplesUesWith2Rls2RlInActSet

Number samples rec within ROP Number UEs with two RL sets & two radio links in active.

Data Source

NodeB_RNC_RXI

Source Field

pmSamplesUesWith2Rls2RlInActSet

Source Section

UtranCell

pmSamplesUesWith2Rls3RlInActSet

Number samples rec within ROP Number UEs with two RL sets & three radio link active set

Data Source

NodeB_RNC_RXI

Source Field

pmSamplesUesWith2Rls3RlInActSet

Source Section

UtranCell

pmSamplesUesWith2Rls4RlInActSet

Number samples rec within ROP Number of UEs with two RL sets & four radio links active.

Data Source

NodeB_RNC_RXI

Source Field

pmSamplesUesWith2Rls4RlInActSet

Source Section

UtranCell

pmSamplesUesWith3Rls3RlInActSet

Number samples rec within the ROP Number of UEs with three RL sets & three RLs active.

Data Source

NodeB_RNC_RXI

Source Field

pmSamplesUesWith3Rls3RlInActSet

Source Section

UtranCell

pmSamplesUesWith3Rls4RlInActSet

Number samples rec within ROP Number UEs with three RL sets & four radio links active.

Data Source

NodeB_RNC_RXI

Source Field

pmSamplesUesWith3Rls4RlInActSet

Source Section

UtranCell

pmSamplesUesWith4Rls4RlInActSet

Number samples rec within ROP Number UEs with four RL sets (one radio link possible RL)

Data Source

NodeB_RNC_RXI

© Copyright IBM Corp. 2008, 2009. All Rights Reserved.

Source Field

pmSamplesUesWith4Rls4RlInActSet

Source Section

UtranCell

pmSamplesUlRlcUserThpCsConv

Number of samples recorded within the ROP for pmSumUlRlcUserThpCsConv.

Data Source

RNC

Source Field

pmSamplesUlRlcUserThpCsConv

Source Section

UtranCell

pmSamplesUlRlcUserThpCsStream

Number of samples recorded within the ROP for pmSumUlRlcUserThpCsStream.

Data Source

RNC

Source Field

pmSamplesUlRlcUserThpCsStream

Source Section

UtranCell

pmSamplesUlRlcUserThpPsStr128

Number of samples in pmSumUlRlcUserThpPsStream128 (that is, pmSamplesUlRlcUserThp PsStream128 = pmSamplesUlRlcUserThpPsStream128 +1, whenever pmSumUlRlcUserThpPsStream128 is to be updated).

Data Source

RNC

Source Field

pmSamplesUlRlcUserThpPsStream128

Source Section

UtranCell

pmSamplesUlRlcUserThpPsStr16

Number of samples in pmSumUlRlcUserThpPsStream16 (that is, pmSamplesUlRlcUserThp PsStream16 = pmSamplesUlRlcUserThpPsStream16 + 1, whenever pmSumUlRlcUserThpPsStream16 is to be updated)

Data Source

RNC

Source Field

pmSamplesUlRlcUserThpPsStream16

Source Section

UtranCell

pmSamplesUlRlcUserThpPsStr32

Number of samples in pmSumUlRlcUserThpPsStream32 (that is, pmSamplesUlRlcUserThp PsStream32 = pmSamplesUlRlcUserThpPsStream32 +1, whenever pmSumUlRlcUserThpPsStream32 is to be updated).

Data Source

RNC

Source Field

pmSamplesUlRlcUserThpPsStream32

Source Section

UtranCell

pmSamplesUlRlcUserThpSpeech

Number of samples recorded within the ROP for pmSumUlRlcUserThpSpeech.

Data Source

RNC

© Copyright IBM Corp. 2008, 2009. All Rights Reserved.

Source Field

pmSamplesUlRlcUserThpSpeech

Source Section

UtranCell

pmSamplesUlRssi

Number of received NBAP Common Measurement Report messages containing valid RTWP value. RTWP (Received Total Wideband Power) is a measurement of uplink RSSI and is defined in 3GPP TS 25.433 (NBAP).

Data Source

RNC

Source Field

pmSamplesUlRssi

Source Section

UtranCell

pmServiceDeniedCodeShortageCs57

CS Data Service denied ratio. This counter is stepped when an establishment request for a CS57 RAB is denied by admission control due to a shortage of channelization codes.

Data Source

GPEH P4

Source Field

pmServiceDeniedCodeShortageCs57

Source Section

UtranCell

pmServiceDeniedCodeShortageCs64

CS Data Service denied ratio. This counter is stepped when an establishment request for a CS64 RAB is denied by admission control due to a shortage of channelization codes.

Data Source

GPEH P4

Source Field

pmServiceDeniedCodeShortageCs64

Source Section

UtranCell

pmServiceDeniedCodeShortageCsSpeech

CS Data Service denied ratio. This counter is stepped when an establishment request for a CS Speech RAB is denied by admission control due to a shortage of channelization codes.

Data Source

GPEH P4

Source Field

pmServiceDeniedCodeShortageCsSpeech

Source Section

UtranCell

pmServiceDeniedCodeShortageHs

PS Data Service denied ratio. This counter is stepped when an establishment request for a HS RAB is denied by admission control due to a shortage of channelization codes.

Data Source

GPEH P4

Source Field

pmServiceDeniedCodeShortageHs

Source Section

UtranCell

pmServiceDeniedCodeShortagePacket

PS Data Service denied ratio. This counter is stepped when an establishment request for a PS/HS RAB is denied by admission control due to a shortage of channelization codes.

Data Source

GPEH P4

© Copyright IBM Corp. 2008, 2009. All Rights Reserved.

Source Field

pmServiceDeniedCodeShortagePacket

Source Section

UtranCell

pmServiceDeniedCodeShortagePs64

Not in vendor doc. But in Sample file

Data Source

GPEH P4

Source Field

pmServiceDeniedCodeShortagePs64

Source Section

UtranCell

pmServiceDeniedDlPowerCs57

CS Data Service denied ratio. This counter is stepped when an establishment request for a CS57 RAB is denied by admission control due to not enough DL Power.

Data Source

GPEH P4

Source Field

pmServiceDeniedDlPowerCs57

Source Section

UtranCell

pmServiceDeniedDlPowerCs64

CS Data Service denied ratio. This counter is stepped when an establishment request for a CS64 RAB is denied by admission control due to not enough DL Power.

Data Source

GPEH P4

Source Field

pmServiceDeniedDlPowerCs64

Source Section

UtranCell

pmServiceDeniedDlPowerCsSpeech

CS Data Service denied ratio. This counter is stepped when an establishment request for a CS Speech RAB is denied by admission control due to not enough DL Power.

Data Source

GPEH P4

Source Field

pmServiceDeniedDlPowerCsSpeech

Source Section

UtranCell

pmServiceDeniedDlPowerHs

PS Data Service denied ratio. This counter is stepped when an establishment request for a HS RAB is denied by admission control due to not enough DL Power.

Data Source

GPEH P4

Source Field

pmServiceDeniedDlPowerHs

Source Section

UtranCell

pmServiceDeniedDlPowerPacket

PS Data Service denied ratio. This counter is stepped when an establishment request for a PS RAB is denied by admission control due to not enough DL Power.

Data Source

GPEH P4

© Copyright IBM Corp. 2008, 2009. All Rights Reserved.

Source Field

pmServiceDeniedDlPowerPacket

Source Section

UtranCell

pmServiceDeniedDlPowerPs64

Not in vendor doc. But in Sample file

Data Source

GPEH P4

Source Field

pmServiceDeniedDlPowerPs64

Source Section

UtranCell

pmServiceDeniedOtherCs57

CS Data Service denied ratio. GPEH Event: Internal_System_Block, Internal_Rab_Establishment

Data Source

GPEH P4

Source Field

pmServiceDeniedOtherCs57

Source Section

UtranCell

pmServiceDeniedOtherCs64

CS Data Service denied ratio. GPEH Event: Internal_System_Block, Internal_Rab_Establishment

Data Source

GPEH P4

Source Field

pmServiceDeniedOtherCs64

Source Section

UtranCell

pmServiceDeniedOtherCsSpeech

CS Data Service denied ratio. GPEH Event: Internal_System_Block, Internal_Rab_Establishment

Data Source

GPEH P4

Source Field

pmServiceDeniedOtherCsSpeech

Source Section

UtranCell

pmServiceDeniedOtherHs

PS Data Service denied ratio. GPEH Event: Internal_System_Block, Internal_Rab_Establishment

Data Source

GPEH P4

Source Field

pmServiceDeniedOtherHs

Source Section

UtranCell

pmServiceDeniedOtherPacket

PS Data Service denied ratio. GPEH Event: Internal_System_Block, Internal_Rab_Establishment

Data Source

GPEH P4

© Copyright IBM Corp. 2008, 2009. All Rights Reserved.

Source Field

pmServiceDeniedOtherPacket

Source Section

UtranCell

pmServiceDeniedOtherPs64

Not in vendor doc. But in Sample file

Data Source

GPEH P4

Source Field

pmServiceDeniedOtherPs64

Source Section

UtranCell

pmServiceDeniedUlIntCs57

CS Data Service denied ratio. This counter is stepped when an establishment request for a CS57 RAB is denied by admission control due to uplink link Cell Congestion caused by too high uplink interference.

Data Source

GPEH P4

Source Field

pmServiceDeniedUlIntCs57

Source Section

UtranCell

pmServiceDeniedUlIntCs64

CS Data Service denied ratio. This counter is stepped when an establishment request for a CS64 RAB is denied by admission control due to uplink link Cell Congestion caused by too high uplink interference.

Data Source

GPEH P4

Source Field

pmServiceDeniedUlIntCs64

Source Section

UtranCell

pmServiceDeniedUlIntCsSpeech

CS Data Service denied ratio. This counter is stepped when an establishment request for a CS Speech RAB is denied by admission control due to uplink link Cell Congestion caused by too high uplink interference.

Data Source

GPEH P4

Source Field

pmServiceDeniedUlIntCsSpeech

Source Section

UtranCell

pmServiceDeniedUlIntHs

PS Data Service denied ratio. This counter is stepped when an establishment request for a HS RAB is denied by admission control due to uplink link Cell Congestion caused by too high uplink interference.

Data Source

GPEH P4

Source Field

pmServiceDeniedUlIntHs

Source Section

UtranCell

pmServiceDeniedUlIntPacket

PS Data Service denied ratio. This counter is stepped when an establishment request for a PS/HS RAB is denied by admission control due to uplink link Cell Congestion caused by too high uplink interference.

© Copyright IBM Corp. 2008, 2009. All Rights Reserved.

Data Source

GPEH P4

Source Field

pmServiceDeniedUlIntPacket

Source Section

UtranCell

pmServiceDeniedUlIntPs64

Not in vendor doc. But in Sample file

Data Source

GPEH P4

Source Field

pmServiceDeniedUlIntPs64

Source Section

UtranCell

pmSmplActDriftUesBestCell

Number of samples recorded within the ROP for pmSumActiveDriftUesBestCell.

Data Source

RNC

Source Field

pmSamplesActiveDriftUesBestCell

Source Section

UtranCell

pmSuccNonBlindInterFreqHoCsConversational_RUP

Number of successful non-blind outgoing inter-frequency handovers for RAB = CS Conversational except speech (roll up from UtranRelation)

Data Source

NodeB_RNC_RXI

Source Field

pmSuccNonBlindInterFreqHoCsConversational

Source Section

UtranRelation

pmSuccNonBlindInterFreqHoCsSpeech12_RUP

Number of successful non-blind outgoing inter-frequency handovers for RAB = Conversational speech (roll up from UtranRelation)

Data Source

NodeB_RNC_RXI

Source Field

pmSuccNonBlindInterFreqHoCsSpeech12

Source Section

UtranRelation

pmSuccNonBlindInterFreqHoPsInteractiveGreater64_RUP

Number of successful non-blind outgoing inter-frequency handovers for RAB = Interactive greater than 64 kbps (roll up from UtranRelation)

Data Source

NodeB_RNC_RXI

Source Field

pmSuccNonBlindInterFreqHoPsInteractiveGreater64

Source Section

UtranRelation

pmSuccNonBlindInterFreqHoPsInteractiveLess64_RUP

Number of successful non-blind outgoing inter-frequency handovers for RAB = Interactive less than or equal to 64 kbps (roll up from UtranRelation)

© Copyright IBM Corp. 2008, 2009. All Rights Reserved.

Data Source

NodeB_RNC_RXI

Source Field

pmSuccNonBlindInterFreqHoPsInteractiveLess64

Source Section

UtranRelation

pmSuccNonBlindInterFreqHoStreamingOther_RUP

Number of successful non-blind outgoing inter-frequency handovers for RAB = Streaming (roll up from UtranRelation)

Data Source

NodeB_RNC_RXI

Source Field

pmSuccNonBlindInterFreqHoStreamingOther

Source Section

UtranRelation

pmSumActDlRlcTotPacketThp

(Retired on P6)Aggregation of DL RLC throughput measurements (that is, incremented by the measured throughput amount, including user data, retransmissions, padding bits, data PDU headers and RLC control PDU's: pmSumActDlRlcTotPacketThp = pmSumActDlRlcTotP

Data Source

RNC

Source Field

pmSumActDlRlcTotPacketThp

Source Section

UtranCell

pmSumActDlRlcUserPacketThp

(Retired on P6)Aggregation of DL RLC throughput measurements (i.e. incremented by the measured RLC throughput amount, including user data but excluding retransmissions, padding bits, data PDU headers and RLC control PDU’s: pmSumActDlRlcUserPacketThp

Source Field

pmSumActDlRlcUserPacketThp

Source Section

UtranCell

pmSumActiveDriftUesBestCell

Sum of all sample values recorded during a ROP for the number of active UEs for which this cell is in the DRNC and is either the HS serving cell or, for non-HS configurations, the best cell in the active set. An active UE is a UE in state CELL_DCH or CELL_FACH.

Data Source

RNC

Source Field

pmSumActiveDriftUesBestCell

Source Section

UtranCell

pmSumActiveUesBestCell

Sum of all sample values recorded during a ROP for the number of active UEs for which this cell is in the SRNC and is either the HS serving cell or, for non-HS configurations, the best cell in the active set. An active UE is a UE in state CELL_DCH or CELL_FACH.

Data Source

RNC

Source Field

pmSumActiveUesBestCell

Source Section

UtranCell

© Copyright IBM Corp. 2008, 2009. All Rights Reserved.

pmSumActUlRlcTotPacketThp

(Retired on P6)Aggregation of UL RLC throughput measurements (that is, incremented by the measured RLC throughput amount, including user data, retransmissions, padding bits, data PDU headers and RLC control PDU's: pmSumActUlRlcTotPacketThp = pmSumActUlRlc

Data Source

RNC

Source Field

pmSumActUlRlcTotPacketThp

Source Section

UtranCell

pmSumActUlRlcUserPacketThp

(Retired on P6)Aggregation of UL RLC throughput measurements (that is, incremented by the measured RLC throughput amount, including user data but excluding retransmissions, padding bits, data PDU headers and RLC control PDU's: pmSumActUlRlcUserPacketThp =

Data Source

RNC

Source Field

pmSumActUlRlcUserPacketThp

Source Section

UtranCell

pmSumAmr12200RabEstablish

Sum of all sample values recorded within ROP period for 'Number of Speech AMR12200 RABs established'.

Data Source

RNC

Source Field

pmSumAmr12200RabEstablish

Source Section

UtranCell

pmSumAmr4750RabEstablish

Sum of all sample values recorded within ROP period for 'Number of Speech AMR4750 RABs established'.

Data Source

RNC

Source Field

pmSumAmr4750RabEstablish

Source Section

UtranCell

pmSumAmr5900RabEstablish

Sum of all sample values recorded within ROP period for 'Number of Speech AMR5900 RABs established'.

Data Source

RNC

Source Field

pmSumAmr5900RabEstablish

Source Section

UtranCell

pmSumAmr7950RabEstablish

Sum of all sample values recorded within ROP period for 'Number of Speech AMR7950 RABs established'.

Data Source

RNC

Source Field

pmSumAmr7950RabEstablish

© Copyright IBM Corp. 2008, 2009. All Rights Reserved.

Source Section

UtranCell

pmSumAmrNbMmRabEstablish

Sum of all sample values recorded during a ROP for the number of established AMR-NB Multimode RABs.

Data Source

RNC

Source Field

pmSumAmrNbMmRabEstablish

Source Section

UtranCell

pmSumAmrWbRabEstablish

Sum of all sample values recorded within ROP period for 'Number of AMR-WB RABs established'.

Data Source

RNC

Source Field

pmSumAmrWbRabEstablish

Source Section

UtranCell

pmSumBestAmr12200RabEstablish

Sum of all sample values recorded within ROP period for 'Number of Speech AMR12200 RABs established' for the best cell in the Active Set.

Data Source

RNC

Source Field

pmSumBestAmr12200RabEstablish

Source Section

UtranCell

pmSumBestAmr4750RabEstablish

Sum of all sample values recorded within ROP period for 'Number of Speech AMR4750 RABs established' for the best cell in the Active Set.

Data Source

RNC

Source Field

pmSumBestAmr4750RabEstablish

Source Section

UtranCell

pmSumBestAmr5900RabEstablish

Sum of all sample values recorded within ROP period for 'Number of Speech AMR5900 RABs established' for the best cell in the Active Set.

Data Source

RNC

Source Field

pmSumBestAmr5900RabEstablish

Source Section

UtranCell

pmSumBestAmr7950RabEstablish

Sum of all sample values recorded within ROP period for 'Number of Speech AMR7950 RABs established' for the best cell in the Active Set.

Data Source

RNC

Source Field

pmSumBestAmr7950RabEstablish

© Copyright IBM Corp. 2008, 2009. All Rights Reserved.

Source Section

UtranCell

pmSumBestAmrNbMmRabEstablish

Sum of all sample values recorded during a ROP for number of established AMR-NB Multimode RABs. Incremented in the best cell in the active set.

Data Source

RNC

Source Field

pmSumBestAmrNbMmRabEstablish

Source Section

UtranCell

pmSumBestAmrWbRabEstablish

Sum of all sample values recorded within ROP period for 'Number of AMR-WB RABs established' for the best cell in the Active Set.

Data Source

RNC

Source Field

pmSumBestAmrWbRabEstablish

Source Section

UtranCell

pmSumBestCs12Establish

Sum of all sample values recorded for 'number of distinct CS speech users', referred to the best cell in the Active Set

Data Source

NodeB_RNC_RXI

Source Field

pmSumBestCs12Establish

Source Section

UtranCell

pmSumBestCs12PsIntRabEstablish

Sum of all sample values recorded within the ROP period for 'Number of PS Interactive + Speech multi-RABs established, regardless of PS rate', for the best cell in the Active Set.

Data Source

RNC

Source Field

pmSumBestCs12PsIntRabEstablish

Source Section

UtranCell

pmSumBestCs57RabEstablish

Sum of all sample values recorded within the ROP period for 'Number of streaming 57.6 kbit CS RABs established', for the best cell in the Active Set

Data Source

RNC

Source Field

pmSumBestCs57RabEstablish

Source Section

UtranCell

pmSumBestCs64PsIntRabEstablish

Sum of all sample values recorded within the ROP period for 'Number of PS Interactive + conversational 64 kbps CS multi- RABs established', for the best cell in the Active Set.

Data Source

RNC

Source Field

pmSumBestCs64PsIntRabEstablish

© Copyright IBM Corp. 2008, 2009. All Rights Reserved.

Source Section

UtranCell

pmSumBestCs64RabEstablish

Sum of all sample values recorded within the ROP period for 'Number of conversational 64 kbit CS RABs established', for the best cell in the Active Set.

Data Source

RNC

Source Field

pmSumBestCs64RabEstablish

Source Section

UtranCell

pmSumBestDchPsIntRabEstablish

Sum of all sample values recorded within the ROP period for 'Number of PS Interactive RABs established, regardless of rate', for the best cell in the Active Set.

Data Source

RNC

Source Field

pmSumBestDchPsIntRabEstablish

Source Section

UtranCell

pmSumBestPsEulRabEstablish

Number of E-DCH radio bearers established in this cell when it is the best cell.

Data Source

RNC

Source Field

pmSumBestPsEulRabEstablish

Source Section

UtranCell

pmSumBestPsHsAdchRabEstablish

Sum of all sample values recorded for 'Number of PS

Data Source

RNC

Source Field

pmSumBestPsHsAdchRabEstablish

Source Section

UtranCell

pmSumBestPsStr128Ps8RabEstablish

Sum of all sample values recorded for 'Number of A-DCHs established in the cell which is the best cell in the active set' .

Data Source

RNC

Source Field

pmSumBestPsStr128Ps8RabEstablish

Source Section

UtranCell

pmSumBestPsStr64Ps8RabEstablish

Sum of all sample values recorded within the ROP period for Number of PS Streaming 16/64 + Packet 8kbps PS multiRABs established referred to the best cell in the AS'

Data Source

RNC

Source Field

pmSumBestPsStr64Ps8RabEstablish

© Copyright IBM Corp. 2008, 2009. All Rights Reserved.

Source Section

UtranCell

pmSumBestPsStreamHsRabEst

Sum of all sample values recorded within the ROP period for 'Number of PS Streaming HS RABs established', for the best cell in the Active Set.

Data Source

RNC

Source Field

pmSumBestPsStreamHsRabEst

Source Section

UtranCell

pmSumBestRrcOnlyEstablish

Sum of all sample values recorded during a ROP for the number of established Stand-alone SRB 13.6. Incremented in the best cell in the active set.

Data Source

RNC

Source Field

pmSumBestRrcOnlyEstablish

Source Section

UtranCell

pmSumBestSrbOnly34

Sum of all sample values recorded during a ROP for the number of established Stand-alone SRB 3.4. Incremented in the best cell in the active set.

Data Source

RNC

Source Field

pmSumBestSrbOnly34

Source Section

UtranCell

pmSumCompMode

Total Compressed mode users (sum of all sample values recorded).

Data Source

NodeB_RNC_RXI

Source Field

pmSumCompMode

Source Section

UtranCell

pmSumCs12Ps0RabEstablish

Sum of all sample values recorded for number of active speech CS plus 0/0 (UL/DL) PS multi RABs.

Data Source

NodeB_RNC_RXI

Source Field

pmSumCs12Ps0RabEstablish

Source Section

UtranCell

pmSumCs12Ps64RabEstablish

Sum of all sample values recorded for number of active speech CS plus 64/64 kbps PS multi RABs

Data Source

NodeB_RNC_RXI

Source Field

pmSumCs12Ps64RabEstablish

© Copyright IBM Corp. 2008, 2009. All Rights Reserved.

Source Section

UtranCell

pmSumCs12RabEstablish

Sum of all sample values recorded for number of active speech 12.2 kbps RABs

Data Source

NodeB_RNC_RXI

Source Field

pmSumCs12RabEstablish

Source Section

UtranCell

pmSumCs57RabEstablish

A snapshot of the total number of currently active CS 57 kbps RABs is recorded once every 30 seconds

Data Source

NodeB_RNC_RXI

Source Field

pmSumCs57RabEstablish

Source Section

UtranCell

pmSumCs64Ps8RabEstablish

This number of samples recorded in the ROP period for the multi RAB UDI+8/8

Data Source

RNC

Source Field

pmSumCs64Ps8RabEstablish

Source Section

UtranCell

pmSumCs64RabEstablish

A snapshot of the total number of currently active CS 64 kbps RABs is recorded once every 30 seconds.

Data Source

NodeB_RNC_RXI

Source Field

pmSumCs64RabEstablish

Source Section

UtranCell

pmSumDchDlRlcTotPacketThp

Aggregate of R99 DL RLC throughput measurements (i.e. incremented by the measured throughput amount, including retransmissions: pmSumDchDlRlcTotPacketThp = pmSumDchDlRlcTotPacketThp + throughput_measure).

Data Source

RNC

Source Field

pmSumDchDlRlcTotPacketThp

Source Section

UtranCell

pmSumDchDlRlcUserPacketThp

Aggregate of R99 DL RLC throughput measurements (i.e. incremented by the measured RLC throughput amount, excluding retransmissions: pmSumDchDlRlcUserPacketThp = pmSumDchDlRlcUserPacketThp + throughput_measure).

Data Source

RNC

© Copyright IBM Corp. 2008, 2009. All Rights Reserved.

Source Field

pmSumDchDlRlcUserPacketThp

Source Section

UtranCell

pmSumDchUlRlcTotPacketThp

Aggregate of R99 UL RLC throughput measurements (i.e. incremented by the measured RLC throughput amount, including retransmissions: pmSumDchUlRlcTotPacketThp = pmSumDchUlRlcTotPacketThp + throughput_measure).

Data Source

RNC

Source Field

pmSumDchUlRlcTotPacketThp

Source Section

UtranCell

pmSumDchUlRlcUserPacketThp

Aggregate of R99 UL RLC throughput measurements (i.e. incremented by the measured RLC throughput amount, excluding retransmissions: pmSumDchUlRlcUserPacketThp = pmSumDchUlRlcUserPacketThp + throughput_measure).

Data Source

RNC

Source Field

pmSumDchUlRlcUserPacketThp

Source Section

UtranCell

pmSumDlCode

Aggregate of DL Channelization code tree usage (percentage of lowest leaf, SF 256, usage: blocked or allocated) measurements.

Data Source

RNC

Source Field

pmSumDlCode

Source Section

UtranCell

pmSumDlRlcUserThpCsConv

Sum of all sample values recorded during a ROP for the average downlink RLC Transparent Mode user-data throughput for CS Conversational Data RABs. Incremented in the best cell in the active set.

Data Source

RNC

Source Field

pmSumDlRlcUserThpCsConv

Source Section

UtranCell

pmSumDlRlcUserThpCsStream

Sum of all sample values recorded during a ROP for the average downlink RLC Transparent Mode user-data throughput for CS Streaming RABs. Incremented in the best cell in the active set.

Data Source

RNC

Source Field

pmSumDlRlcUserThpCsStream

Source Section

UtranCell

© Copyright IBM Corp. 2008, 2009. All Rights Reserved.

pmSumDlRlcUserThpPsStream128

Aggregate of DL RLC throughput measurements (that is, incremented by the measured RLC throughput amount, excluding retransmissions, padding bits, data PDU headers and RLC control messages). Not incremented when data volume = 0. Used to calculate the DL RLC throughput for Streaming PS 128 kbps DCH. Measured only in SRNC, on the best cell in the active set.

Data Source

RNC

Source Field

pmSumDlRlcUserThpPsStream128

Source Section

UtranCell

pmSumDlRlcUserThpPsStream64

Aggregate of DL RLC throughput measurements (that is, incremented by the measured RLC throughput amount, excluding retransmissions, padding bits, data PDU headers and RLC control messages). Not incremented when data volume = 0. Used to calculate the DL RLC throughput for Streaming PS 64 kbps DCH. Measured only in SRNC, on the best cell in the active set.

Data Source

RNC

Source Field

pmSumDlRlcUserThpPsStream64

Source Section

UtranCell

pmSumDlRlcUserThpPsStreamHs

Aggregate of DL RLC throughput measurements (that is, incremented by the measured RLC throughput amount, excluding retransmissions and RLC control messages). Not incremented when data volume = 0. Used to calculate the downlink RLC throughput for Streaming PS HSDPA. Measured in the HS serving cell in kbit/s

Data Source

RNC

Source Field

pmSumDlRlcUserThpPsStreamHs

Source Section

UtranCell

pmSumDlRlcUserThpSpeech

Sum of all sample values recorded during a ROP for the average downlink RLC Transparent Mode user-data throughput for Speech (AMR-NB and AMR-WB) RABs. Incremented in the best cell in the active set.

Data Source

RNC

Source Field

pmSumDlRlcUserThpSpeech

Source Section

UtranCell

pmSumEulRlcTotPacketThp

Aggregate of EUL UL RLC throughput measurements (that is, incremented by the measured EUL RLC throughput amount including retransmissions: pmSumEulRlcTotPacketThp = pmSumEulRlcTotPacketThp + throughput_measure). Reported on the best cell in the active set

Data Source

RNC

Source Field

pmSumEulRlcTotPacketThp

Source Section

Eul

pmSumEulRlcUserPacketThp

Aggregate of EUL UL RLC throughput measurements (that is, incremented by the measured RLC throughput amount, excluding retransmissions: pmSumEulRlcUserPacketThp = pmSumEulRlcUserPacketThp + throughput_measure). Reported on the best cell in the active set.

© Copyright IBM Corp. 2008, 2009. All Rights Reserved.

Data Source

RNC

Source Field

pmSumEulRlcUserPacketThp

Source Section

Eul

pmSumFachPsIntRabEstablish

Sum of all sample values recorded within the ROP period for 'Number of PS RABs in state FACH established', for the best cell in the Active Set.

Data Source

RNC

Source Field

pmSumFachPsIntRabEstablish

Source Section

UtranCell

pmSumHsDlRlcTotPacketThp

Aggregate of HS-DSCH DL RLC throughput measurements (that is, incremented by the measured throughput amount, including retransmissions: pmSumHsDlRlcTotPacketThp = pmSumHsDlRlcTotPacketThp + throughput_measure). Reported on the HS-DSCH cell.

Data Source

RNC

Source Field

pmSumHsDlRlcTotPacketThp

Source Section

Hsdsch

pmSumHsDlRlcUserPacketThp

Aggregate of HS-DSCH DL RLC throughput measurements (that is, incremented by the measured RLC throughput amount, excluding retransmissions: pmSumHsDlRlcUserPacketThp = pmSumHsDlRlcUserPacketThp + throughput_measure). Reported on the HS-DSCH cell

Data Source

RNC

Source Field

pmSumHsDlRlcUserPacketThp

Source Section

Hsdsch

pmSumOfSampAseDl

Total ASE downlink (sum of all sample values recorded).

Data Source

NodeB_RNC_RXI

Source Field

pmSumOfSampAseDl

Source Section

UtranCell

pmSumOfSampAseUl

(Updated Source Field/Section on RP12)Total ASE UL (sum of all sample values recorded)

Source Field

pmSumOfSampAseUl

Source Section

UtranCell

pmSumOfTimesMeasOlDl

Number of times Congestion Control is triggered due to high downlink power.

© Copyright IBM Corp. 2008, 2009. All Rights Reserved.

Data Source

NodeB_RNC_RXI

Source Field

pmSumOfTimesMeasOlDl

Source Section

UtranCell

pmSumOfTimesMeasOlUl

Number of times Congestion Control is triggered due to high UL interference

Data Source

NodeB_RNC_RXI

Source Field

pmSumOfTimesMeasOlUl

Source Section

UtranCell

pmSumPacketDlDelay_0

Aggregate of the RAN SDU PS interactive packet delay with respect to the best cell in the active set

Data Source

RNC

Source Field

pmSumPacketDlDelay

Source Section

UtranCell

pmSumPacketDlDelay_1

Aggregate of the RAN SDU PS interactive packet delay with respect to the best cell in the active set

Data Source

RNC

Source Field

pmSumPacketDlDelay

Source Section

UtranCell

pmSumPacketDlDelay_2

Aggregate of the RAN SDU PS interactive packet delay with respect to the best cell in the active set

Data Source

RNC

Source Field

pmSumPacketDlDelay

Source Section

UtranCell

pmSumPacketLatency_0

Aggregate of the RAN SDU PS interactive packet latency with respect to the best cell in the active set.

Data Source

RNC

Source Field

pmSumPacketLatency

Source Section

UtranCell

pmSumPacketLatency_1

Aggregate of the RAN SDU PS interactive packet latency with respect to the best cell in the active set.

© Copyright IBM Corp. 2008, 2009. All Rights Reserved.

Data Source

RNC

Source Field

pmSumPacketLatency

Source Section

UtranCell

pmSumPacketLatency_2

Aggregate of the RAN SDU PS interactive packet latency with respect to the best cell in the active set.

Data Source

RNC

Source Field

pmSumPacketLatency

Source Section

UtranCell

pmSumPacketLatencyPsStreamHs_0

Aggregate of the RAN SDU PS Streaming HS packet latency with respect to the best cell.

Data Source

RNC

Source Field

pmSumPacketLatencyPsStreamHs

Source Section

UtranCell

pmSumPacketLatencyPsStreamHs_1

Aggregate of the RAN SDU PS Streaming HS packet latency with respect to the best cell.

Data Source

RNC

Source Field

pmSumPacketLatencyPsStreamHs

Source Section

UtranCell

pmSumPacketLatencyPsStreamHs_2

Aggregate of the RAN SDU PS Streaming HS packet latency with respect to the best cell.

Data Source

RNC

Source Field

pmSumPacketLatencyPsStreamHs

Source Section

UtranCell

pmSumPs128RabEstablish

Sum of all sample values recorded for number of 128 kbps PS RABs established

Data Source

NodeB_RNC_RXI

Source Field

pmSumPs128RabEstablish

Source Section

UtranCell

pmSumPs384RabEstablish

Sum of all sample values recorded for number of 384 kbps PS RABs established

Data Source

NodeB_RNC_RXI

© Copyright IBM Corp. 2008, 2009. All Rights Reserved.

Source Field

pmSumPs384RabEstablish

Source Section

UtranCell

pmSumPs64RabEstablish

Sum of all sample values recorded for number of active PS64 kbps RABs

Data Source

NodeB_RNC_RXI

Source Field

pmSumPs64RabEstablish

Source Section

UtranCell

pmSumPsEulRabEstablish

Number of E-DCH radio bearers established in this cell.

Data Source

RNC

Source Field

pmSumPsEulRabEstablish

Source Section

UtranCell

pmSumPsHsAdchRabEstablish

Sum of all sample values recorded for 'Number of A-DCHs established'.

Data Source

RNC

Source Field

pmSumPsHsAdchRabEstablish

Source Section

UtranCell

pmSumPsInteractive

Sum of all sample values recorded for 'Number of Interactive PS RABs established excluding RABs on HS configurations or CELL_FACH'.

Data Source

RNC

Source Field

pmSumPsInteractive

Source Section

UtranCell

pmSumPsStr128Ps8RabEstablish

Sum of all sample values recorded for 'Number of PS Streaming 16/128 + Packet 8kbps PS multi-RABs established'.

Data Source

RNC

Source Field

pmSumPsStr128Ps8RabEstablish

Source Section

UtranCell

pmSumPsStr64Ps8RabEstablish

A snapshot of the total number of currently active PS Streaming + PS8 multi RABs is recorded once every 30 seconds. This counter contains the sum of all the snapshot values taken in a ROP period added together.

Data Source

NodeB_RNC_RXI

Source Field

pmSumPsStr64Ps8RabEstablish

© Copyright IBM Corp. 2008, 2009. All Rights Reserved.

Source Section

UtranCell

pmSumPsStreamHsRabEst

Sum of all sample values recorded within the ROP period for 'Number of PS Streaming HS RABs established'.

Data Source

RNC

Source Field

pmSumPsStreamHsRabEst

Source Section

UtranCell

pmSumRabFach

(Retired on P6)Sum of all sample values recorded for the number of RABs per FACH channel.

Data Source

NodeB_RNC_RXI

Source Field

pmSumRabFach

Source Section

UtranCell

pmSumRrcOnlyEstablish

A snapshot of the total number of currently active RRC only connection is recorded once every 30 seconds.

Data Source

NodeB_RNC_RXI

Source Field

pmSumRrcOnlyEstablish

Source Section

UtranCell

pmSumSf4Ul

Sum of the sampled amount of radio links that are on Spreading Factor (SF) = 4 (384 kbps) in UL in a cell during a ROP period

Data Source

RNC

Source Field

pmSumSf4Ul

Source Section

UtranCell

pmSumSqrDlCode

Aggregate of the squares of the individual measurements in pmSumDlCode (that is, pmSumSqrDlCode = pmSumSqrDlCode + measurement_value^2).

Data Source

RNC

Source Field

pmSumSqrDlCode

Source Section

UtranCell

pmSumSqrUlRssi

Aggregate of the squares of the individual measurements in pmSumUlRssi (that is, pmSumSqrUlRssi = pmSumSqrUlRssi + measurement_value^2).

Data Source

RNC

Source Field

pmSumSqrUlRssi

© Copyright IBM Corp. 2008, 2009. All Rights Reserved.

Source Section

UtranCell

pmSumSrbOnly34

Sum of all sample values recorded during a ROP for the number of established Stand-alone SRB 3.4.

Data Source

RNC

Source Field

pmSumSrbOnly34

Source Section

UtranCell

pmSumUesWith1Rls1RlInActSet

Sum sample values rec for number of Ues one RL set & one RL active

Data Source

NodeB_RNC_RXI

Source Field

pmSumUesWith1Rls1RlInActSet

Source Section

UtranCell

pmSumUesWith1Rls2RlInActSet

Sum sample values rec for number of UEs with one RL set & two RL in the active set.

Data Source

NodeB_RNC_RXI

Source Field

pmSumUesWith1Rls2RlInActSet

Source Section

UtranCell

pmSumUesWith1Rls3RlInActSet

Sum sample values rec for number UEs with one RL set & three or more RLs active set

Data Source

NodeB_RNC_RXI

Source Field

pmSumUesWith1Rls3RlInActSet

Source Section

UtranCell

pmSumUesWith2Rls2RlInActSet

Sum sample value rec for number UEs with two RL sets & two RLs in active set.

Data Source

NodeB_RNC_RXI

Source Field

pmSumUesWith2Rls2RlInActSet

Source Section

UtranCell

pmSumUesWith2Rls3RlInActSet

Sum sample values rec for number UEs with two RL sets & three RLs in the active set

Data Source

NodeB_RNC_RXI

Source Field

pmSumUesWith2Rls3RlInActSet

Source Section

UtranCell

© Copyright IBM Corp. 2008, 2009. All Rights Reserved.

pmSumUesWith2Rls4RlInActSet

Sum sample values rec for number UEs with two RL sets & four RLs in the active set.

Data Source

NodeB_RNC_RXI

Source Field

pmSumUesWith2Rls4RlInActSet

Source Section

UtranCell

pmSumUesWith3Rls3RlInActSet

Sum sample values rec for number of UEs with three RL sets & three RLs active set.

Data Source

NodeB_RNC_RXI

Source Field

pmSumUesWith3Rls3RlInActSet

Source Section

UtranCell

pmSumUesWith3Rls4RlInActSet

Sum sample values rec number UEs with three RL sets & four RLs active set.

Data Source

NodeB_RNC_RXI

Source Field

pmSumUesWith3Rls4RlInActSet

Source Section

UtranCell

pmSumUesWith4Rls4RlInActSet

Sum sample values rec number UEs with four RL set (only one RL possible per RL set)

Data Source

NodeB_RNC_RXI

Source Field

pmSumUesWith4Rls4RlInActSet

Source Section

UtranCell

pmSumUlRlcUserThpCsConv

Sum of all sample values recorded during a ROP for the average uplink RLC Transparent Mode user-data throughput for CS Conversational Data RABs. Incremented in the best cell in the active set.

Data Source

RNC

Source Field

pmSumUlRlcUserThpCsConv

Source Section

UtranCell

pmSumUlRlcUserThpCsStream

Sum of all sample values recorded during a ROP for the average uplink RLC Transparent Mode user-data throughput for CS Streaming RABs. Incremented in the best cell in the active set.

Data Source

RNC

Source Field

pmSumUlRlcUserThpCsStream

Source Section

UtranCell

pmSumUlRlcUserThpPsStream128

Aggregate of UL RLC throughput measurements (that is, incremented by the measured RLC throughput amount, excluding retransmissions and RLC control messages). Not incremented

© Copyright IBM Corp. 2008, 2009. All Rights Reserved.

when data volume = 0. Used to calculate the uplink RLC throughput for Streaming PS 128 kbps DCH. Measured on the best cell in the active set in kbit/s.

Data Source

RNC

Source Field

pmSumUlRlcUserThpPsStream128

Source Section

UtranCell

pmSumUlRlcUserThpPsStream16

Aggregate of UL RLC throughput measurements (that is, incremented by the measured RLC throughput amount, excluding retransmissions, padding bits, data PDU headers, and RLC control messages). Not incremented when data volume = 0. Used to calculate the UL RLC throughput for Streaming PS 16 kbps DCH. Measured only in SRNC, on the best cell in the active set.

Data Source

RNC

Source Field

pmSumUlRlcUserThpPsStream16

Source Section

UtranCell

pmSumUlRlcUserThpPsStream32

Aggregate of UL RLC throughput measurements (that is, incremented by the measured RLC throughput amount, excluding retransmissions and RLC control messages). Not incremented when data volume = 0. Used to calculate the uplink RLC throughput for Streaming PS 32 kbps DCH. Measured on the best cell in the active set in kbit/s.

Data Source

RNC

Source Field

pmSumUlRlcUserThpPsStream32

Source Section

UtranCell

pmSumUlRlcUserThpSpeech

Sum of all sample values recorded during a ROP for the average uplink RLC Transparent Mode user-data throughput for Speech (AMR-NB and AMR-WB) RABs. Incremented in the best cell in the active set.

Data Source

RNC

Source Field

pmSumUlRlcUserThpSpeech

Source Section

UtranCell

pmSumUlRssi

Sum of valid RTWP values as received in NBAP Common Measurement Reports. RTWP range: 0-621 (corresponding to -112 ... -50dB). RTWP (Received Total Wideband Power) is a measurement of uplink RSSI and is defined in 3GPP TS 25.433 (NBAP).

Data Source

RNC

Source Field

pmSumUlRssi

Source Section

UtranCell

pmSystemRabReleaseIfhoCs

CS Call drop, during IFHO. Step counter when the initial radio configuration contains a CS RAB and the final RAB configuration does not contain a CS RAB AND the release occurs during Inter-Frequency Handover.

Data Source

GPEH P4

© Copyright IBM Corp. 2008, 2009. All Rights Reserved.

Source Field

pmSystemRabReleaseIfhoCs

Source Section

UtranCell

pmSystemRabReleaseIfhoPs

PS Call drop, during IFHO. Step counter when the initial radio configuration contains a PS RAB and the final RAB configuration does not contain a PS RAB AND the release occurs during Inter-Frequency Handover.

Data Source

GPEH P4

Source Field

pmSystemRabReleaseIfhoPs

Source Section

UtranCell

pmSystemRabReleaseIratCs

CS Call drop, during IRAT. Step counter when the initial radio configuration contains a CS RAB and the final RAB configuration does not contain a CS RAB AND the release occurs during Inter-RAT Handover.

Data Source

GPEH P4

Source Field

pmSystemRabReleaseIratCs

Source Section

UtranCell

pmSystemRabReleaseIratPs

PS Call drop, during IRAT. Step counter when the initial radio configuration contains a PS RAB and the final RAB configuration does not contain a PS RAB AND the release occurs during Inter-RAT Handover.

Data Source

GPEH P4

Source Field

pmSystemRabReleaseIratPs

Source Section

UtranCell

pmTotalTimeDlCellCong

The total amount of time (sec) a cell was congested in DL during a reporting period.

pmTotalTimeHsdschOverload

The total amount of time (sec) a cell was HS-DSCH overloaded.

Data Source

RNC

Source Field

pmTotalTimeHsdschOverload

Source Section

UtranCell

pmTotalTimeUlCellCong

The total amount of time (sec) a cell was congested in UL during a reporting period.

pmTotNoRrcConnectAttIratCcOrder

Tot Number RRC connect establishment att with estabt cause "Inter-RAT cell change order"

Data Source

NodeB_RNC_RXI

Source Field

pmTotNoRrcConnectAttIratCcOrder

Source Section

UtranCell

© Copyright IBM Corp. 2008, 2009. All Rights Reserved.

pmTotNoRrcConnectAttIratCellResel

Tot Number RRC connection establishment att with estabt cause "Inter-RAT cell reselection"

Data Source

NodeB_RNC_RXI

Source Field

pmTotNoRrcConnectAttIratCellResel

Source Section

UtranCell

pmTotNoRrcConnectFailCongIratCcOrder

Number of unsucc RRC Connection establishments with estcause Inter-RAT cell change order, which failed due to congestion

Data Source

NodeB_RNC_RXI

Source Field

pmTotNoRrcConnectFailCongIratCcOrder

Source Section

UtranCell

pmTotNoRrcConnectFailCongIratCellResel

Number of unsucc RRC Connection establishments with est cause Inter-RAT cell reselection, which failed due to congestion

Data Source

NodeB_RNC_RXI

Source Field

pmTotNoRrcConnectFailCongIratCellResel

Source Section

UtranCell

pmTotNoRrcConnectReq

Total number of RRC connection requests.

Data Source

NodeB_RNC_RXI

Source Field

pmTotNoRrcConnectReq

Source Section

UtranCell

pmTotNoRrcConnectReqCs

Total number of Conversational Call (originating and terminating) RRC connection attempts

Data Source

NodeB_RNC_RXI

Source Field

pmTotNoRrcConnectReqCs

Source Section

UtranCell

pmTotNoRrcConnectReqCsSucc

Total number of Successful Conversational Call (originating and terminating) RRC connection attempts

Data Source

NodeB_RNC_RXI

Source Field

pmTotNoRrcConnectReqCsSucc

Source Section

UtranCell

© Copyright IBM Corp. 2008, 2009. All Rights Reserved.

pmTotNoRrcConnectReqDetach

RRC establishment success rate. This counter is stepped when the RRC Connection Request message is received with Establishment Cause = Detach.

Data Source

GPEH P5ED

Source Field

pmTotNoRrcConnectReqDetach

Source Section

UtranCell

pmTotNoRrcConnectReqEmergency

RRC establishment success rate. This counter is stepped when the RRC Connection Request message is received with Establishment Cause = Emergency Call.

Data Source

GPEH P5ED

Source Field

pmTotNoRrcConnectReqEmergency

Source Section

UtranCell

pmTotNoRrcConnectReqOrigBackgrd

RRC establishment success rate. This counter is stepped when the RRC Connection Request message is received with Establishment Cause = Originating Background Call.

Data Source

GPEH P5ED

Source Field

pmTotNoRrcConnectReqOrigBackgrd

Source Section

UtranCell

pmTotNoRrcConnectReqOrigConv

RRC establishment success rate. This counter is stepped when the RRC Connection Request message is received with Establishment Cause = Originating Conversational Call.

Data Source

GPEH P5ED

Source Field

pmTotNoRrcConnectReqOrigConv

Source Section

UtranCell

pmTotNoRrcConnectReqOrigHigh

This counter is stepped when the RRC Connection Request message is received with Establishment Cause = Originating High Priority Signalling.

Data Source

GPEH P5ED

Source Field

pmTotNoRrcConnectReqOrigHigh

Source Section

UtranCell

pmTotNoRrcConnectReqOrigInt

RRC establishment success rate. This counter is stepped when the RRC Connection Request message is received with Establishment Cause = Originating Interactive Call.

Data Source

GPEH P5ED

Source Field

pmTotNoRrcConnectReqOrigInt

Source Section

UtranCell

© Copyright IBM Corp. 2008, 2009. All Rights Reserved.

pmTotNoRrcConnectReqOrigLow

RRC establishment success rate. This counter is stepped when the RRC Connection Request message is received with Establishment Cause = Originating Low Priority Signalling.

Data Source

GPEH P5ED

Source Field

pmTotNoRrcConnectReqOrigLow

Source Section

UtranCell

pmTotNoRrcConnectReqOrigStream

RRC establishment success rate. This counter is stepped when the RRC Connection Request message is received with Establishment Cause = Originating Streaming Call.

Data Source

GPEH P5ED

Source Field

pmTotNoRrcConnectReqOrigStream

Source Section

UtranCell

pmTotNoRrcConnectReqOrigSub

RRC establishment success rate. This counter is stepped when the RRC Connection Request message is received with Establishment Cause = Originating Subscribed traffic Call.

Data Source

GPEH P5ED

Source Field

pmTotNoRrcConnectReqOrigSub

Source Section

UtranCell

pmTotNoRrcConnectReqPs

Total number of Interactive and Background (originating and terminating) RRC connection attempts

Data Source

NodeB_RNC_RXI

Source Field

pmTotNoRrcConnectReqPs

Source Section

UtranCell

pmTotNoRrcConnectReqPsSucc

Total number of Successful Interactive and Background (originating and terminating) RRC connection attempts

Data Source

NodeB_RNC_RXI

Source Field

pmTotNoRrcConnectReqPsSucc

Source Section

UtranCell

pmTotNoRrcConnectReqReEst

RRC establishment success rate. This counter is stepped when the RRC Connection Request message is received with Establishment Cause = Call re-establishment.

Data Source

GPEH P5ED

Source Field

pmTotNoRrcConnectReqReEst

Source Section

UtranCell

© Copyright IBM Corp. 2008, 2009. All Rights Reserved.

pmTotNoRrcConnectReqRegister

RRC establishment success rate. This counter is stepped when the RRC Connection Request message is received with Establishment Cause = Registration.

Data Source

GPEH P5ED

Source Field

pmTotNoRrcConnectReqRegister

Source Section

UtranCell

pmTotNoRrcConnectReqSms

Total number of RRC connection requests with establishment cause=low priority.

Data Source

NodeB_RNC_RXI

Source Field

pmTotNoRrcConnectReqSms

Source Section

UtranCell

pmTotNoRrcConnectReqSubTr

Number of RRC Connection Requests with Establishment Cause 'originating subscribed traffic call'.

Data Source

RNC

Source Field

pmTotNoRrcConnectReqSubTr

Source Section

UtranCell

pmTotNoRrcConnectReqSuccess

Total number of successful RRC connection requests.

Data Source

NodeB_RNC_RXI

Source Field

pmTotNoRrcConnectReqSuccess

Source Section

UtranCell

pmTotNoRrcConnectReqTermBackgrd

RRC establishment success rate. This counter is stepped when the RRC Connection Request message is received with Establishment Cause = Terminating Background Call.

Data Source

GPEH P5ED

Source Field

pmTotNoRrcConnectReqTermBackgrd

Source Section

UtranCell

pmTotNoRrcConnectReqTermConv

RRC establishment success rate. This counter is stepped when the RRC Connection Request message is received with Establishment Cause = Terminating Conversational Call.

Data Source

GPEH P5ED

Source Field

pmTotNoRrcConnectReqTermConv

Source Section

UtranCell

© Copyright IBM Corp. 2008, 2009. All Rights Reserved.

pmTotNoRrcConnectReqTermHigh

RRC establishment success rate. This counter is stepped when the RRC Connection Request message is received with Establishment Cause = Terminating High Priority Signalling.

Data Source

GPEH P5ED

Source Field

pmTotNoRrcConnectReqTermHigh

Source Section

UtranCell

pmTotNoRrcConnectReqTermInt

RRC establishment success rate. This counter is stepped when the RRC Connection Request message is received with Establishment Cause = Terminating Interactive Call.

Data Source

GPEH P5ED

Source Field

pmTotNoRrcConnectReqTermInt

Source Section

UtranCell

pmTotNoRrcConnectReqTermLow

RRC establishment success rate. This counter is stepped when the RRC Connection Request message is received with Establishment Cause = Terminating Low Priority Signalling.

Data Source

GPEH P5ED

Source Field

pmTotNoRrcConnectReqTermLow

Source Section

UtranCell

pmTotNoRrcConnectReqTermStream

RRC establishment success rate. This counter is stepped when the RRC Connection Request message is received with Establishment Cause = Terminating Streaming Call.

Data Source

GPEH P5ED

Source Field

pmTotNoRrcConnectReqTermStream

Source Section

UtranCell

pmTotNoRrcConnectReqTermUnknown

RRC establishment success rate. This counter is stepped when the RRC Connection Request message is received with Establishment Cause Terminating cause unknown

Data Source

GPEH P5ED

Source Field

pmTotNoRrcConnectReqTermUnknown

Source Section

UtranCell

pmTotNoRrcConnectSetup

Total number of RRC Connection Setup messages sent to UEs, not including repetitions.

Data Source

RNC

Source Field

pmTotNoRrcConnectSetup

Source Section

UtranCell

© Copyright IBM Corp. 2008, 2009. All Rights Reserved.

pmTotNoRrcConnectSuccDetach

RRC establishment success rate. This counter is stepped when an RRC Connection Setup Complete message is received and has been preceded by an RRC Connection Request message with Establishment Cause = Detach.

Data Source

GPEH P5ED

Source Field

pmTotNoRrcConnectSuccDetach

Source Section

UtranCell

pmTotNoRrcConnectSuccEmergency

RRC establishment success rate. This counter is stepped when an RRC Connection Setup Complete message is received and has been preceded by an RRC Connection Request message with Establishment Cause = Emergency Call.

Data Source

GPEH P5ED

Source Field

pmTotNoRrcConnectSuccEmergency

Source Section

UtranCell

pmTotNoRrcConnectSuccessIratCcOrder

Number Succ RRC Connection establishment with estabt cause "Inter-RAT cell change order"

Data Source

NodeB_RNC_RXI

Source Field

pmTotNoRrcConnectSuccessIratCcOrder

Source Section

UtranCell

pmTotNoRrcConnectSuccessIratCellResel

Number Succ RRC connection establishment with estabt cause "Inter-RAT cell reselection"

Data Source

NodeB_RNC_RXI

Source Field

pmTotNoRrcConnectSuccessIratCellResel

Source Section

UtranCell

pmTotNoRrcConnectSuccOrigBackgrd

RRC establishment success rate. This counter is stepped when an RRC Connection Setup Complete message is received and has been preceded by an RRC Connection Request message with Establishment Cause = Originating Background Call.

Data Source

GPEH P5ED

Source Field

pmTotNoRrcConnectSuccOrigBackgrd

Source Section

UtranCell

pmTotNoRrcConnectSuccOrigConv

RRC establishment success rate. This counter is stepped when an RRC Connection Setup Complete message is received and has been preceded by an RRC Connection Request message with Establishment Cause = Originating Conversational Call.

Data Source

GPEH P5ED

Source Field

pmTotNoRrcConnectSuccOrigConv

Source Section

UtranCell

© Copyright IBM Corp. 2008, 2009. All Rights Reserved.

pmTotNoRrcConnectSuccOrigHigh

This counter is stepped when an RRC Connection Setup Complete message is received and has been preceded by an RRC Connection Request message with Establishment Cause = Originating High Priority Signalling.

Data Source

GPEH P5ED

Source Field

pmTotNoRrcConnectSuccOrigHigh

Source Section

UtranCell

pmTotNoRrcConnectSuccOrigInt

RRC establishment success rate. This counter is stepped when an RRC Connection Setup Complete message is received and has been preceded by an RRC Connection Request message with Establishment Cause = Originating Interactive Call.

Data Source

GPEH P5ED

Source Field

pmTotNoRrcConnectSuccOrigInt

Source Section

UtranCell

pmTotNoRrcConnectSuccOrigLow

RRC establishment success rate. This counter is stepped when an RRC Connection Setup Complete message is received and has been preceded by an RRC Connection Request message with Establishment Cause = Originating Low Priority Signalling.

Data Source

GPEH P5ED

Source Field

pmTotNoRrcConnectSuccOrigLow

Source Section

UtranCell

pmTotNoRrcConnectSuccOrigStream

RRC establishment success rate. This counter is stepped when an RRC Connection Setup Complete message is received and has been preceded by an RRC Connection Request message with Establishment Cause = Originating Streaming Call.

Data Source

GPEH P5ED

Source Field

pmTotNoRrcConnectSuccOrigStream

Source Section

UtranCell

pmTotNoRrcConnectSuccOrigSub

RRC establishment success rate. This counter is stepped when an RRC Connection Setup Complete message is received and has been preceded by an RRC Connection Request message with Establishment Cause = Originating Subscribed traffic Call.

Data Source

GPEH P5ED

Source Field

pmTotNoRrcConnectSuccOrigSub

Source Section

UtranCell

pmTotNoRrcConnectSuccReEst

RRC establishment success rate. This counter is stepped when an RRC Connection Setup Complete message is received and has been preceded by an RRC Connection Request message with Establishment Cause = Call re-establishment.

Data Source

GPEH P5ED

© Copyright IBM Corp. 2008, 2009. All Rights Reserved.

Source Field

pmTotNoRrcConnectSuccReEst

Source Section

UtranCell

pmTotNoRrcConnectSuccRegister

RRC establishment success rate. This counter is stepped when an RRC Connection Setup Complete message is received and has been preceded by an RRC Connection Request message with Establishment Cause = Registration.

Data Source

GPEH P5ED

Source Field

pmTotNoRrcConnectSuccRegister

Source Section

UtranCell

pmTotNoRrcConnectSuccTermBackgrd

RRC establishment success rate. This counter is stepped when an RRC Connection Setup Complete message is received and has been preceded by an RRC Connection Request message with Establishment Cause = Terminating Background Call.

Data Source

GPEH P5ED

Source Field

pmTotNoRrcConnectSuccTermBackgrd

Source Section

UtranCell

pmTotNoRrcConnectSuccTermConv

RRC establishment success rate. This counter is stepped when an RRC Connection Setup Complete message is received and has been preceded by an RRC Connection Request message with Establishment Cause = Terminating Conversational Call.

Data Source

GPEH P5ED

Source Field

pmTotNoRrcConnectSuccTermConv

Source Section

UtranCell

pmTotNoRrcConnectSuccTermHigh

RRC establishment success rate. This counter is stepped when an RRC Connection Setup Complete message is received and has been preceded by an RRC Connection Request message with Establishment Cause = Terminating High Priority Signalling.

Data Source

GPEH P5ED

Source Field

pmTotNoRrcConnectSuccTermHigh

Source Section

UtranCell

pmTotNoRrcConnectSuccTermInt

RRC establishment success rate. This counter is stepped when an RRC Connection Setup Complete message is received and has been preceded by an RRC Connection Request message with Establishment Cause = Terminating Interactive Call.

Data Source

GPEH P5ED

Source Field

pmTotNoRrcConnectSuccTermInt

Source Section

UtranCell

© Copyright IBM Corp. 2008, 2009. All Rights Reserved.

pmTotNoRrcConnectSuccTermLow

RRC establishment success rate. This counter is stepped when an RRC Connection Setup Complete message is received and has been preceded by an RRC Connection Request message with Establishment Cause = Terminating Low Priority Signalling.

Data Source

GPEH P5ED

Source Field

pmTotNoRrcConnectSuccTermLow

Source Section

UtranCell

pmTotNoRrcConnectSuccTermStream

RRC establishment success rate. This counter is stepped when an RRC Connection Setup Complete message is received and has been preceded by an RRC Connection Request message with Establishment Cause = Terminating Streaming Call.

Data Source

GPEH P5ED

Source Field

pmTotNoRrcConnectSuccTermStream

Source Section

UtranCell

pmTotNoRrcConnectSuccTermUnknown

RRC establishment success rate. This counter is stepped when an RRC Connection Setup Complete message is received and has been preceded by an RRC Connection Request message with Establishment Cause Terminating cause unknown

Data Source

GPEH P5ED

Source Field

pmTotNoRrcConnectSuccTermUnknown

Source Section

UtranCell

pmTotNoRrcConnUeCap_00

Number of times that a UE with certain capabilities has successfully setup an RRC connection. The individual counter elements are stepped based on the individual UE capabilities. UE capabilities: A-GPS positioning support.

Data Source

RNC

Source Field

pmTotNoRrcConnectUeCapability

Source Section

UtranCell

pmTotNoRrcConnUeCap_01

Number of times that a UE with certain capabilities has successfully setup an RRC connection. The individual counter elements are stepped based on the individual UE capabilities. UE capabilities: HS-DSCH support, all UE categories.

Data Source

RNC

Source Field

pmTotNoRrcConnectUeCapability

Source Section

UtranCell

pmTotNoRrcConnUeCap_02

Number of times that a UE with certain capabilities has successfully setup an RRC connection. The individual counter elements are stepped based on the individual UE capabilities. UE capabilities: HS-DSCH 10 and 15 codes support, UE category 7-10 and 13-18.

Data Source

RNC

© Copyright IBM Corp. 2008, 2009. All Rights Reserved.

Source Field

pmTotNoRrcConnectUeCapability

Source Section

UtranCell

pmTotNoRrcConnUeCap_03

Number of times that a UE with certain capabilities has successfully setup an RRC connection. The individual counter elements are stepped based on the individual UE capabilities. UE capabilities: HS-DSCH 64 QAM support, UE category 13-14.

Data Source

RNC

Source Field

pmTotNoRrcConnectUeCapability

Source Section

UtranCell

pmTotNoRrcConnUeCap_04

Number of times that a UE with certain capabilities has successfully setup an RRC connection. The individual counter elements are stepped based on the individual UE capabilities. UE capabilities: HS-DSCH MIMO support, UE category 15-16.

Data Source

RNC

Source Field

pmTotNoRrcConnectUeCapability

Source Section

UtranCell

pmTotNoRrcConnUeCap_05

Number of times that a UE with certain capabilities has successfully setup an RRC connection. The individual counter elements are stepped based on the individual UE capabilities. UE capabilities: HS-DSCH MIMO and 64 QAM support (not simultaneously), UE category 17-18.

Data Source

RNC

Source Field

pmTotNoRrcConnectUeCapability

Source Section

UtranCell

pmTotNoRrcConnUeCap_06

Number of times that a UE with certain capabilities has successfully setup an RRC connection. The individual counter elements are stepped based on the individual UE capabilities. UE capabilities: HS-DSCH MIMO and 64 QAM support (simultaneously), UE category 19-20.

Data Source

RNC

Source Field

pmTotNoRrcConnectUeCapability

Source Section

UtranCell

pmTotNoRrcConnUeCap_07

Number of times that a UE with certain capabilities has successfully setup an RRC connection. The individual counter elements are stepped based on the individual UE capabilities. UE capabilities: E-DCH support, all UE categories.

Data Source

RNC

Source Field

pmTotNoRrcConnectUeCapability

Source Section

UtranCell

© Copyright IBM Corp. 2008, 2009. All Rights Reserved.

pmTotNoRrcConnUeCap_08

Number of times that a UE with certain capabilities has successfully setup an RRC connection. The individual counter elements are stepped based on the individual UE capabilities. UE capabilities: E-DCH support 2ms TTI, UE category 2, 4, 6 and 7.

Data Source

RNC

Source Field

pmTotNoRrcConnectUeCapability

Source Section

UtranCell

pmTotNoRrcConnUeCap_09

Number of times that a UE with certain capabilities has successfully setup an RRC connection. The individual counter elements are stepped based on the individual UE capabilities. UE capabilities: E-DCH 16 QAM support, UE category 7.

Data Source

RNC

Source Field

pmTotNoRrcConnectUeCapability

Source Section

UtranCell

pmTotNoRrcReq

Total number of RRC Requests received during the ROP.

Data Source

RNC

Source Field

pmTotNoRrcReq

Source Section

UtranCell

pmTotNoTermRrcConnectReq

Number of mobile terminating RRC connection attempts

Data Source

RNC

Source Field

pmTotNoTermRrcConnectReq

Source Section

UtranCell

pmTotNoTermRrcConnectReqCs

Number of mobile terminating conversational RRC connection attempts.

Data Source

RNC

Source Field

pmTotNoTermRrcConnectReqCs

Source Section

UtranCell

pmTotNoTermRrcConnectReqCsSucc

Number of successful mobile terminating conversational RRC connections.

Data Source

RNC

Source Field

pmTotNoTermRrcConnectReqCsSucc

Source Section

UtranCell

pmTotNoTermRrcConnectReqPs

Number of mobile terminating Interactive & Background RRC connection attempts.

© Copyright IBM Corp. 2008, 2009. All Rights Reserved.

Data Source

RNC

Source Field

pmTotNoTermRrcConnectReqPs

Source Section

UtranCell

pmTotNoTermRrcConnectReqPsSucc

Number of successful mobile terminating Interactive & Background RRC connections.

Data Source

RNC

Source Field

pmTotNoTermRrcConnectReqPsSucc

Source Section

UtranCell

pmTotNoTermRrcConnectReqSucc

Number of successful mobile terminating RRC connections.

Data Source

RNC

Source Field

pmTotNoTermRrcConnectReqSucc

Source Section

UtranCell

pmTotNoUtranRejRrcConnReq

Total number of UTRAN-rejected RRC connection requests.

Data Source

NodeB_RNC_RXI

Source Field

pmTotNoUtranRejRrcConnReq

Source Section

UtranCell

pmTotRabEstSuccess

RAB Setup Success on Ranap Traffic Class. Traffic class: 1-streaming, 2-interactive, 3-background

Data Source

GPEH P5MD

Source Field

pmTotRabEstSuccess

Source Section

UtranCell

pmTotServiceDeniedCs57

CS Data Service denied ratio. This counter is stepped when an establishment request for a CS57 RAB is denied due to admission control for any reason.

Data Source

GPEH P4

Source Field

pmTotServiceDeniedCs57

Source Section

UtranCell

pmTotServiceDeniedCs64

CS Data Service denied ratio. This counter is stepped when an establishment request for a CS64 RAB is denied due to admission control for any reason.

Data Source

GPEH P4

© Copyright IBM Corp. 2008, 2009. All Rights Reserved.

Source Field

pmTotServiceDeniedCs64

Source Section

UtranCell

pmTotServiceDeniedCsSpeech

CS Speech Service denied. This counter is stepped when an establishment request for a CS Speech RAB is denied due to admission control for any reason.

Data Source

GPEH P4

Source Field

pmTotServiceDeniedCsSpeech

Source Section

UtranCell

pmTotServiceDeniedHs

PS Data Service denied ratio. This counter is stepped when an establishment request for a HS RAB is denied due to admission control for any reason.

Data Source

GPEH P4

Source Field

pmTotServiceDeniedHs

Source Section

UtranCell

pmTotServiceDeniedPacket

PS Data Service denied ratio. This counter is stepped when an establishment request for a PS/HS RAB is denied due to admission control for any reason.

Data Source

GPEH P4

Source Field

pmTotServiceDeniedPacket

Source Section

UtranCell

pmTotServiceDeniedPs64

Not in vendor doc. But in Sample file

Data Source

GPEH P4

Source Field

pmTotServiceDeniedPs64

Source Section

UtranCell

pmTransportBlocksBcUl

Total number of uplink DCH transport blocks before combining.

Data Source

NodeB_RNC_RXI

Source Field

pmTransportBlocksBcUl

Source Section

UtranCell

pmTrChnlReconfigAttempt

RRC Transport Channel Reconfiguration Attempt

Data Source

GPEH P5MD

Source Field

pmTrChnlReconfigAttempt

© Copyright IBM Corp. 2008, 2009. All Rights Reserved.

Source Section

UtranCell

pmTrChnlReconfigSuccess

RRC Transport Channel Reconfiguration Success

Data Source

GPEH P5MD

Source Field

pmTrChnlReconfigSuccess

Source Section

UtranCell

pmUlRlcUserPacketThp_0_5

(Retired on P6)The UL RLC throughput (user data), including user data but excluding retransmissions, padding bits, data PDU headers and RLC control PDU in the area [0..5) Kbits per second

Source Field

pmUlRlcUserPacketThp

Source Section

UtranCell

pmUlRlcUserPacketThp_100_120

(Retired on P6)The UL RLC throughput (user data), including user data but excluding retransmissions, padding bits, data PDU headers and RLC control PDU’s.in the area [100..120) Kbits per second

Source Field

pmUlRlcUserPacketThp

Source Section

UtranCell

pmUlRlcUserPacketThp_120_140

(Retired on P6)The UL RLC throughput (user data), including user data but excluding retransmissions, padding bits, data PDU headers and RLC control PDU’s.in the area [120..140) Kbits per second

Source Field

pmUlRlcUserPacketThp

Source Section

UtranCell

pmUlRlcUserPacketThp_140_160

(Retired on P6)The UL RLC throughput (user data), including user data but excluding retransmissions, padding bits, data PDU headers and RLC control PDU’s.in the area [140..160) Kbits per second

Source Field

pmUlRlcUserPacketThp

Source Section

UtranCell

pmUlRlcUserPacketThp_160_180

(Retired on P6)The UL RLC throughput (user data), including user data but excluding retransmissions, padding bits, data PDU headers and RLC control PDU’s.in the area [160..180) Kbits per second

Source Field

pmUlRlcUserPacketThp

Source Section

UtranCell

pmUlRlcUserPacketThp_180_200

(Retired on P6)The UL RLC throughput (user data), including user data but excluding retransmissions, padding bits, data PDU headers and RLC control PDU’s.in the area [180..200) Kbits per second

Source Field

pmUlRlcUserPacketThp

© Copyright IBM Corp. 2008, 2009. All Rights Reserved.

Source Section

UtranCell

pmUlRlcUserPacketThp_20_40

(Retired on P6)The UL RLC throughput (user data), including user data but excluding retransmissions, padding bits, data PDU headers and RLC control PDU’s.in the area [20..40) Kbits per second

Source Field

pmUlRlcUserPacketThp

Source Section

UtranCell

pmUlRlcUserPacketThp_200_220

(Retired on P6)The UL RLC throughput (user data), including user data but excluding retransmissions, padding bits, data PDU headers and RLC control PDU’s.in the area [200..220) Kbits per second

Source Field

pmUlRlcUserPacketThp

Source Section

UtranCell

pmUlRlcUserPacketThp_220_240

(Retired on P6)The UL RLC throughput (user data), including user data but excluding retransmissions, padding bits, data PDU headers and RLC control PDU’s.in the area [220..240) Kbits per second

Source Field

pmUlRlcUserPacketThp

Source Section

UtranCell

pmUlRlcUserPacketThp_240_260

(Retired on P6)The UL RLC throughput (user data), including user data but excluding retransmissions, padding bits, data PDU headers and RLC control PDU’s.in the area [240..260) Kbits per second

Source Field

pmUlRlcUserPacketThp

Source Section

UtranCell

pmUlRlcUserPacketThp_260_280

(Retired on P6)The UL RLC throughput (user data), including user data but excluding retransmissions, padding bits, data PDU headers and RLC control PDU’s.in the area [260..280) Kbits per second

Source Field

pmUlRlcUserPacketThp

Source Section

UtranCell

pmUlRlcUserPacketThp_280_300

(Retired on P6)The UL RLC throughput (user data), including user data but excluding retransmissions, padding bits, data PDU headers and RLC control PDU’s.in the area [280..300) Kbits per second

Source Field

pmUlRlcUserPacketThp

Source Section

UtranCell

pmUlRlcUserPacketThp_300_320

(Retired on P6)The UL RLC throughput (user data), including user data but excluding retransmissions, padding bits, data PDU headers and RLC control PDU’s.in the area [300..320) Kbits per second

Source Field

pmUlRlcUserPacketThp

Source Section

UtranCell

© Copyright IBM Corp. 2008, 2009. All Rights Reserved.

pmUlRlcUserPacketThp_320_340

(Retired on P6)The UL RLC throughput (user data), including user data but excluding retransmissions, padding bits, data PDU headers and RLC control PDU’s.in the area [320..340) Kbits per second

Source Field

pmUlRlcUserPacketThp

Source Section

UtranCell

pmUlRlcUserPacketThp_340_360

(Retired on P6)The UL RLC throughput (user data), including user data but excluding retransmissions, padding bits, data PDU headers and RLC control PDU’s.in the area [340..360) Kbits per second

Source Field

pmUlRlcUserPacketThp

Source Section

UtranCell

pmUlRlcUserPacketThp_360_more

(Retired on P6)The UL RLC throughput (user data), including user data but excluding retransmissions, padding bits, data PDU headers and RLC control PDU’s.in the area => 360 Kbits per second

Source Field

pmUlRlcUserPacketThp

Source Section

UtranCell

pmUlRlcUserPacketThp_40_60

(Retired on P6)The UL RLC throughput (user data), including user data but excluding retransmissions, padding bits, data PDU headers and RLC control PDU’s.in the area [40..60) Kbits per second

Source Field

pmUlRlcUserPacketThp

Source Section

UtranCell

pmUlRlcUserPacketThp_5_20

(Retired on P6)The UL RLC throughput (user data), including user data but excluding retransmissions, padding bits, data PDU headers and RLC control PDU’s.in the area [5..20) Kbits per second

pmUlRlcUserPacketThp_60_80

(Retired on P6)The UL RLC throughput (user data), including user data but excluding retransmissions, padding bits, data PDU headers and RLC control PDU’s.in the area [60..80) Kbits per second

Source Field

pmUlRlcUserPacketThp

Source Section

UtranCell

pmUlRlcUserPacketThp_80_100

(Retired on P6)The UL RLC throughput (user data), including user data but excluding retransmissions, padding bits, data PDU headers and RLC control PDU’s.in the area [80..100) Kbits per second

Source Field

pmUlRlcUserPacketThp

Source Section

UtranCell

pmUlRlcUserPacketThpP5MD_19

(Retired on P6)UL RLC throughput (user data), including user data but excluding retransmissions, padding bits, data PDU headers and RLC control PDU's. Measured every polling_time duration. Number of samples in the range 360<= x <380kbps

Data Source

RNC

Source Field

pmUlRlcUserPacketThp

© Copyright IBM Corp. 2008, 2009. All Rights Reserved.

Source Section

UtranCell

pmUlRlcUserPacketThpP5MD_20

(Retired on P6)UL RLC throughput (user data), including user data but excluding retransmissions, padding bits, data PDU headers and RLC control PDU's. Measured every polling_time duration. Number of samples in the range 380<= x <400kbps

Data Source

RNC

Source Field

pmUlRlcUserPacketThp

Source Section

UtranCell

pmUlRlcUserPacketThpP5MD_21

(Retired on P6)UL RLC throughput (user data), including user data but excluding retransmissions, padding bits, data PDU headers and RLC control PDU's. Measured every polling_time duration. Number of samples in the range 400<= x <500kbps

Data Source

RNC

Source Field

pmUlRlcUserPacketThp

Source Section

UtranCell

pmUlRlcUserPacketThpP5MD_22

(Retired on P6)UL RLC throughput (user data), including user data but excluding retransmissions, padding bits, data PDU headers and RLC control PDU's. Measured every polling_time duration. Number of samples in the range 500<= x <600kbps

Data Source

RNC

Source Field

pmUlRlcUserPacketThp

Source Section

UtranCell

pmUlRlcUserPacketThpP5MD_23

(Retired on P6)UL RLC throughput (user data), including user data but excluding retransmissions, padding bits, data PDU headers and RLC control PDU's. Measured every polling_time duration. Number of samples in the range 600<= x <700kbps

Data Source

RNC

Source Field

pmUlRlcUserPacketThp

Source Section

UtranCell

pmUlRlcUserPacketThpP5MD_24

(Retired on P6)UL RLC throughput (user data), including user data but excluding retransmissions, padding bits, data PDU headers and RLC control PDU's. Measured every polling_time duration. Number of samples in the range 700<= x <800kbps

Data Source

RNC

Source Field

pmUlRlcUserPacketThp

Source Section

UtranCell

pmUlRlcUserPacketThpP5MD_25

(Retired on P6)UL RLC throughput (user data), including user data but excluding retransmissions, padding bits, data PDU headers and RLC control PDU's. Measured every polling_time duration. Number of samples in the range 800<= x <900kbps

© Copyright IBM Corp. 2008, 2009. All Rights Reserved.

Data Source

RNC

Source Field

pmUlRlcUserPacketThp

Source Section

UtranCell

pmUlRlcUserPacketThpP5MD_26

(Retired on P6)UL RLC throughput (user data), including user data but excluding retransmissions, padding bits, data PDU headers and RLC control PDU's. Measured every polling_time duration. Number of samples in the range 900<= x <1000kbps

Data Source

RNC

Source Field

pmUlRlcUserPacketThp

Source Section

UtranCell

pmUlRlcUserPacketThpP5MD_27

(Retired on P6)UL RLC throughput (user data), including user data but excluding retransmissions, padding bits, data PDU headers and RLC control PDU's. Measured every polling_time duration. Number of samples in the range 1000<= x <1250kbps

Data Source

RNC

Source Field

pmUlRlcUserPacketThp

Source Section

UtranCell

pmUlRlcUserPacketThpP5MD_28

(Retired on P6)UL RLC throughput (user data), including user data but excluding retransmissions, padding bits, data PDU headers and RLC control PDU's. Measured every polling_time duration. Number of samples in the range 1250<= x <1500kbps

Data Source

RNC

Source Field

pmUlRlcUserPacketThp

Source Section

UtranCell

pmUlRlcUserPacketThpP5MD_29

(Retired on P6)UL RLC throughput (user data), including user data but excluding retransmissions, padding bits, data PDU headers and RLC control PDU's. Measured every polling_time duration. Number of samples in the range x>=1500kbps

Data Source

RNC

Source Field

pmUlRlcUserPacketThp

Source Section

UtranCell

pmUlTrafficVolumeAmr4750

Payload traffic on UL in kbits for speech AMR4750 RAB before macro diversity.

Data Source

RNC

Source Field

pmUlTrafficVolumeAmr4750

Source Section

UtranCell

© Copyright IBM Corp. 2008, 2009. All Rights Reserved.

pmUlTrafficVolumeAmr5900

Payload traffic on UL in kbits for speech AMR5900 RAB before macro diversity.

Data Source

RNC

Source Field

pmUlTrafficVolumeAmr5900

Source Section

UtranCell

pmUlTrafficVolumeAmr7950

Payload traffic on UL in kbits for speech AMR7950 RAB before macro diversity.

Data Source

RNC

Source Field

pmUlTrafficVolumeAmr7950

Source Section

UtranCell

pmUlTrafficVolumeAmrNbMm

Payload traffic in the uplink for conversational/speech AMR-NB Multimode RAB before macro diversity. Payload traffic includes both user data, and Medium Access Control (MAC) and Radio Link Control (RLC) header information. Retransmissions are also counted as part of the traffic volume.

Data Source

RNC

Source Field

pmUlTrafficVolumeAmrNbMm

Source Section

UtranCell

pmUlTrafficVolumeAmrWb

Monitor the payload traffic on Uplink in kb for conversational/speech AMR-WB RAB before macro diversity. Payload includes user data, Medium Access Control (MAC) and Radio Link Control (RLC) header information, and retransmissions are also counted as part of the traffic volume.

Data Source

RNC

Source Field

pmUlTrafficVolumeAmrWb

Source Section

UtranCell

pmUlTrafficVolumeCs12

Payload traffic on uplink in kbits for conversational/speech 12.2 kbps Circuit Switched RAB before macro diversity

Data Source

NodeB_RNC_RXI

Source Field

pmUlTrafficVolumeCs12

Source Section

UtranCell

pmUlTrafficVolumeCs12Ps0

Payload traffic on UL in kbits for speech 12.2 kbps CS and PS 0/0 kbps multi RAB before macro diversity. - Retired fr 5.0.11.0.0

Data Source

NodeB_RNC_RXI

Source Field

pmUlTrafficVolumeCs12Ps0

© Copyright IBM Corp. 2008, 2009. All Rights Reserved.

Source Section

UtranCell

pmUlTrafficVolumeCs12Ps64

Payload traffic on UL in kbits for speech 12.2 kbps CS and PS 64/64 kbps multi RAB before macro diversity. - Retired fr 5.0.11.0.0

Data Source

NodeB_RNC_RXI

Source Field

pmUlTrafficVolumeCs12Ps64

Source Section

UtranCell

pmUlTrafficVolumeCs57

Payload traffic on uplink in kbits for streaming 57.6 kbps Circuit Switched RAB before macro diversity.

Data Source

NodeB_RNC_RXI

Source Field

pmUlTrafficVolumeCs57

Source Section

UtranCell

pmUlTrafficVolumeCs64

Payload traffic on uplink in kbits for conversational 64 kbps Circuit Switched RAB before macro diversity.

Data Source

NodeB_RNC_RXI

Source Field

pmUlTrafficVolumeCs64

Source Section

UtranCell

pmUlTrafficVolumeCs64Ps8

Payload traffic on Uplink in Kbits on Dedicated Channel.- Retired fr 5.0.11.0.0

Data Source

RNC

Source Field

pmUlTrafficVolumeCs64Ps8

Source Section

UtranCell

pmUlTrafficVolumePs128

Payload traffic (kbits) in UL before macro diversity for UeRc configurations which carries an Interactive UL Trch with max rate equal to 128 kbit/s. Only PS Interactive traffic is included.

Data Source

NodeB_RNC_RXI

Source Field

pmUlTrafficVolumePs128

Source Section

UtranCell

pmUlTrafficVolumePs16

Payload traffic, including retransmissions, on Uplink (UL) in Kb for Interactive PS 16 kbps (DCH/DCH or DCH/HS) RAB before macro diversity. Payload includes user data, Medium Access Control (MAC), and Radio Link Control (RLC) header information.

Data Source

RNC

Source Field

pmUlTrafficVolumePs16

© Copyright IBM Corp. 2008, 2009. All Rights Reserved.

Source Section

UtranCell

pmUlTrafficVolumePs384

Payload traffic (kbits) in UL before macro diversity for UeRc configurations which carries an Interactive UL Trch with max rate equal to 384 kbit/s. Only PS Interactive traffic is included.

Data Source

NodeB_RNC_RXI

Source Field

pmUlTrafficVolumePs384

Source Section

UtranCell

pmUlTrafficVolumePs64

Payload traffic (kbits) in UL before macro diversity for UeRc configurations which carries an Interactive UL Trch with max rate equal to 64 kbit/s. Only PS Interactive traffic is included.

Data Source

NodeB_RNC_RXI

Source Field

pmUlTrafficVolumePs64

Source Section

UtranCell

pmUlTrafficVolumePs8

Payload traffic (kbits) in UL before macro diversity for UeRc configurations which carry an Interactive UL TrCH with a maximum bit rate equal to 8 kbit/s. Only the PS Interactive part of the traffic volume is measured.

Data Source

RNC

Source Field

pmUlTrafficVolumePs8

Source Section

UtranCell

pmUlTrafficVolumePsCommon

Payload traffic on UL in kbits for PS RAB on FACH/RACH. Retransmissions are also counted as part of the traffic volume.

Data Source

NodeB_RNC_RXI

Source Field

pmUlTrafficVolumePsCommon

Source Section

UtranCell

pmUlTrafficVolumePsIntEul

Payload traffic (kbits) in UL UeRc configurations on E-DCH . Only Interact. PS traffic is included.

Data Source

RNC

Source Field

pmUlTrafficVolumePsIntEul

Source Section

UtranCell

pmUlTrafficVolumePsStr128

Payload traffic (kbits) in UL before macro diversity for UeRc configurations which carry a Streaming UL TrCH with a maximum bit rate equal to 128 kbit/s. Only the PS Streaming part of the traffic volume is measured.

Data Source

RNC

Source Field

pmUlTrafficVolumePsStr128

© Copyright IBM Corp. 2008, 2009. All Rights Reserved.

Source Section

UtranCell

pmUlTrafficVolumePsStr128Ps8

Payload traffic on UL in kbits for PS Streaming 16/128 + Packet 8kbps RABs after macro diversity.- Retired fr 5.0.11.0.0

Data Source

RNC

Source Field

pmUlTrafficVolumePsStr128Ps8

Source Section

UtranCell

pmUlTrafficVolumePsStr16

Payload traffic (kbits) in UL before macro diversity for UeRc configurations which carry a Streaming UL TrCH with a maximum bit rate equal to 16 kbit/s. Only the PS Streaming part of the traffic volume is measured.

Data Source

RNC

Source Field

pmUlTrafficVolumePsStr16

Source Section

UtranCell

pmUlTrafficVolumePsStr32

Payload traffic (kbits) in UL before macro diversity for UeRc configurations which carries an Streaming PS UL Trch on 32 kbit/s DCH. Only PS Streaming traffic is included.

Data Source

RNC

Source Field

pmUlTrafficVolumePsStr32

Source Section

UtranCell

pmUlTrafficVolumePsStr64Ps8

Payload traffic on UL in Kb for streaming 16/64 PS kbps and interactive/background 8/8 PS multi RAB before macrodiversity. Payload traffic includes user data, MAC and RLC header information, and retransmissions are also counted as part of the traffic volu- Retired fr 5.0.11.0.0

Data Source

NodeB_RNC_RXI

Source Field

pmUlTrafficVolumePsStr64Ps8

Source Section

UtranCell

pmUlTrafficVolumeSrb136

Payload traffic in the uplink for SRB 13.6 before macro diversity. Payload traffic includes both user data, and Medium Access Control (MAC) and Radio Link Control (RLC) header information. Retransmissions are also counted as part of the traffic volume.

Data Source

RNC

Source Field

pmUlTrafficVolumeSrb136

Source Section

UtranCell

pmUlTrafficVolumeSrb34

Payload traffic in the uplink for SRB 3.4 before macro diversity. Payload traffic includes both user data, and Medium Access Control (MAC) and Radio Link Control (RLC) header information. Retransmissions are also counted as part of the traffic volume.

Data Source

RNC

© Copyright IBM Corp. 2008, 2009. All Rights Reserved.

Source Field

pmUlTrafficVolumeSrb34

Source Section

UtranCell

pmUlUpswitchAttemptEul

Number of attempted up-switches, triggered by Ul user activity, to a target RB combination E-DCH/HSDPA. Stepped for the target cell.

Data Source

RNC

Source Field

pmUlUpswitchAttemptEul

Source Section

UtranCell

pmUlUpswitchAttemptHigh

Number of UL upswitch attempts to TrCH with UL rate >= 256 kbit/s.

Data Source

RNC

Source Field

pmUlUpswitchAttemptHigh

Source Section

UtranCell

pmUlUpswitchAttemptLow

Number of UL upswitch attempts to TrCH with UL rate <= 64 kbit/s (inc. FACH).

Data Source

RNC

Source Field

pmUlUpswitchAttemptLow

Source Section

UtranCell

pmUlUpswitchAttemptMedium

Number of UL upswitch attempts to TrCh with 64 Kbit/s< UL rate <256 Kbit/s.

Data Source

RNC

Source Field

pmUlUpswitchAttemptMedium

Source Section

UtranCell

pmUlUpswitchSuccessEul

Number of successful up-switches, triggered by Ul user activity, to a target RB combination E-DCH/HSDPA. Stepped for the target cell.

Data Source

RNC

Source Field

pmUlUpswitchSuccessEul

Source Section

UtranCell

pmUlUpswitchSuccessHigh

Number of successful UL upswitches to TrCh with UL rate >= 256 kbit/s.

Data Source

RNC

© Copyright IBM Corp. 2008, 2009. All Rights Reserved.

Source Field

pmUlUpswitchSuccessHigh

Source Section

UtranCell

pmUlUpswitchSuccessLow

Number of successful UL upswitches to TrCh with UL rate <= 64 kbit/s (inc. FACH).

Data Source

RNC

Source Field

pmUlUpswitchSuccessLow

Source Section

UtranCell

pmUlUpswitchSuccessMedium

Number of successfull UL upswitches to TrCh with 64 Kbit/s< UL rate <256 Kbit/s.

Data Source

RNC

Source Field

pmUlUpswitchSuccessMedium

Source Section

UtranCell

pmUpswitchFachHsAttempt

Number of upswitch attempts from FACH to any HS state.

Data Source

RNC

Source Field

pmUpswitchFachHsAttempt

Source Section

UtranCell

pmUpswitchFachHsSuccess

Number of successful upswitches from FACH to any HS state.

Data Source

RNC

Source Field

pmUpswitchFachHsSuccess

Source Section

UtranCell

pmUtranRabReleaseDlIntCs64

CS Video Telephony Drop rate - UTRAN initiated abnormal releases due to DL interference

Data Source

GPEH P4

Source Field

pmUtranRabReleaseDlIntCs64

Source Section

UtranCell

pmUtranRabReleaseDlIntCsSpeech

CS Speech Drop rate - UTRAN initiated abnormal releases due to DL interference

Data Source

GPEH P4

Source Field

pmUtranRabReleaseDlIntCsSpeech

Source Section

UtranCell

© Copyright IBM Corp. 2008, 2009. All Rights Reserved.

pmUtranRabReleaseDlIntHs

HS Drop rate - UTRAN initiated abnormal releases due to DL interference

Data Source

GPEH P4

Source Field

pmUtranRabReleaseDlIntHs

Source Section

UtranCell

pmUtranRabReleaseDlIntPacket

PS Drop rate - UTRAN initiated abnormal releases due to DL interference

Data Source

GPEH P4

Source Field

pmUtranRabReleaseDlIntPacket

Source Section

UtranCell

pmUtranRabReleaseOtherCs64

CS Video Telephony Drop rate - UTRAN initiated abnormal releases due to Other Reasons

Data Source

GPEH P4

Source Field

pmUtranRabReleaseOtherCs64

Source Section

UtranCell

pmUtranRabReleaseOtherCsSpeech

CS Speech Drop rate - UTRAN initiated abnormal releases due to Other Reasons

Data Source

GPEH P4

Source Field

pmUtranRabReleaseOtherCsSpeech

Source Section

UtranCell

pmUtranRabReleaseOtherHs

HS Drop rate- UTRAN initiated abnormal releases due to Other Reasons

Data Source

GPEH P4

Source Field

pmUtranRabReleaseOtherHs

Source Section

UtranCell

pmUtranRabReleaseOtherPacket

PS Drop rate- UTRAN initiated abnormal releases due to Other Reasons

Data Source

GPEH P4

Source Field

pmUtranRabReleaseOtherPacket

Source Section

UtranCell

pmUtranRabReleaseRlFailCs64

CS Video Telephony Drop rate - UTRAN initiated abnormal releases due to radiolink failure

Data Source

GPEH P4

© Copyright IBM Corp. 2008, 2009. All Rights Reserved.

Source Field

pmUtranRabReleaseRlFailCs64

Source Section

UtranCell

pmUtranRabReleaseRlFailCsSpeech

CS Speech Drop rate - UTRAN initiated abnormal releases due to radiolink failure.

Data Source

GPEH P4

Source Field

pmUtranRabReleaseRlFailCsSpeech

Source Section

UtranCell

pmUtranRabReleaseRlFailHs

HS Drop rate - UTRAN initiated abnormal releases due to radiolink failure

Data Source

GPEH P4

Source Field

pmUtranRabReleaseRlFailHs

Source Section

UtranCell

pmUtranRabReleaseRlFailPacket

PS Drop rate - UTRAN initiated abnormal releases due to radiolink failure

Data Source

GPEH P4

Source Field

pmUtranRabReleaseRlFailPacket

Source Section

UtranCell

pmUtranRabReleaseUlIntCs64

CS Video Telephony Drop rate - UTRAN initiated abnormal releases due to UL interference

Data Source

GPEH P5ED

Source Field

pmUtranRabReleaseUlIntCs64

Source Section

UtranCell

pmUtranRabReleaseUlIntCsSpeech

CS Speech Drop rate - UTRAN initiated abnormal releases due to UL interference

Data Source

GPEH P5ED

Source Field

pmUtranRabReleaseUlIntCsSpeech

Source Section

UtranCell

pmUtranRabReleaseUlIntHs

HS Drop rate- UTRAN initiated abnormal releases due to UL interference

Data Source

GPEH P5ED

Source Field

pmUtranRabReleaseUlIntHs

Source Section

UtranCell

© Copyright IBM Corp. 2008, 2009. All Rights Reserved.

pmUtranRabReleaseUlIntPacket

PS Drop rate- UTRAN initiated abnormal releases due to UL interference

Data Source

GPEH P5ED

Source Field

pmUtranRabReleaseUlIntPacket

Source Section

UtranCell

pOffset1Fach

Power offset for the TFCI. This parameter is applied to both FACH and PCH. { long, Range = 0..24, Default=0 }

Data Source

Bulk CM

Source Section

Fach

pOffset3Fach

Power offset for the pilot. This parameter is applied to both FACH and PCH. { long, Range = 0..24, Default=0 }

Data Source

Bulk CM

Source Section

Fach

primaryCpichPower

Power to be used for transmitting the PCPICH. { long, Range = -100..500, Default=300 }

Data Source

Bulk CM

Source Field

un:primaryCpichPower

Source Section

UtranCell

primarySchPower

Primary SCH power, relative to the primaryCpichPower value. { long, Range = -350..150, Default=-18 }

Data Source

Bulk CM

Source Field

un:primarySchPower

Source Section

UtranCell

primaryScramblingCode

The primary downlink scrambling code to be used in the cell. { long, Range = 0..511, Default=Mandatory }

Data Source

Bulk CM

Source Field

un:primaryScramblingCode

Source Section

UtranCell

pwrAdm

Admission limit for admission on DL cell carrier power. { long, Range = 0..100, Default=75 }

Data Source

Bulk CM

© Copyright IBM Corp. 2008, 2009. All Rights Reserved.

Source Section

UtranCell

pwrAdmOffset

Relative admission limit on DL cell carrier power. { long, Range = 0..100, Default=10 }

Data Source

Bulk CM

Source Section

UtranCell

pwrCongFilter

System constant. { long, Default=1 }

Data Source

Bulk CM

Source Section

UtranCell

pwrEstFact

System constant. { long, Default=30 }

Data Source

Bulk CM

Source Section

UtranCell

pwrHyst

Hysterese time setting for detection of congestion in the DL transmitted carrier power. { long, Range = 0..60000, Default=300 }

Data Source

Bulk CM

Source Section

UtranCell

pwrOffset

Used by Congestion Control. { long, Range = 0..100, Default=5 }

Data Source

Bulk CM

Source Section

UtranCell

qHyst1

Cell reselection hysteresis used in UE functions in idle and connected mode. Value launched by System information (SIB3). { long, Range = 0..40, Default=4 }

Data Source

Bulk CM

Source Section

UtranCell

qHyst2

The hysteresis value of the serving cell. Used to perform cell ranking for the serving cell. { long, Range = 0..40, Default=4 }

Data Source

Bulk CM

Source Section

UtranCell

qQualMin

Used in UE functions for cell selection/reselection in idle mode and connected mode. Minimum required (acceptable) quality level in the cell (dB). { long, Range = -24..0, Default=-18 }

Data Source

Bulk CM

© Copyright IBM Corp. 2008, 2009. All Rights Reserved.

Source Section

UtranCell

qRxLevMin

Used in UE functions for cell selection/reselection in idle mode and connected mode. Minimum required { long, Range = -115..-25, Default=-115 }

Data Source

Bulk CM

Source Section

UtranCell

qualMeasQuantity

Used in UE functions for cell selection/reselection in idle and connected mode. Cell selection and reselection quality measure. Value launched by System information (SIB3, SIB11 and SIB12). { string, Default= CPICH_EC_NO }

Data Source

Bulk CM

Source Section

UtranCell

rac

Routing Area Code, RAC (Ref. 3GPP TS 23.003)

Data Source

Bulk CM

Source Field

un:rac

Source Section

UtranCell

releaseAseDl

Amount of ASE in DL to be released with each periodic congestion resolve action targeting guaranteed traffic class connections in a cell. { long, Range = 0..500, Default=1 }

Data Source

Bulk CM

Source Section

UtranCell

releaseAseDlGhs

Amount of ASE in DL to be released with each periodic congestion resolve action targeting guaranteed-hs traffic class connections in a cell. { long, Range = 0..5000, Default=0 }

Data Source

Bulk CM

Source Section

UtranCell

releaseAseDlNg

Amount of ASE in DL to be released with each periodic congestion resolve action targeting non-guaranteed traffic class connections in a cell. { long, Range = 0..500, Default=3 }

Data Source

Bulk CM

Source Section

UtranCell

reservedBy

Reference to the PacketDataRouter MO which uses the PdrDevice. { sequence<PacketDataRouter,8>, Default = empty, Default=, ReadOnly, }

Data Source

Bulk CM

Source Section

Pch

© Copyright IBM Corp. 2008, 2009. All Rights Reserved.

reservedBy_CM

Reference to the UtranRelation and/or CoverageRelation MO that corresponds to this UtranCell (having a reference to this UtranCell). { sequence<ManagedObject,*>, Default = empty, Default= , ReadOnly, }

Data Source

Bulk CM

Source Section

UtranCell

rlFailureT

Guard period before sending RL Failure. { long, Range = 0..255, Default=10 }

Data Source

Bulk CM

Source Section

UtranCell

routingAreaRef

Reference to the RoutingArea Managed Object. { RoutingArea, Default= empty }

Data Source

Bulk CM

Source Section

UtranCell

sac

Service Area Code, SAC (Ref. 3GPP TS 23.003)

Data Source

Bulk CM

Source Field

un:sac

Source Section

UtranCell

sccpchOffset

Radio timing offset inside a radio frame. (SCCPCH parameter) { long, Range = 0..149, Default=0 }

Data Source

Bulk CM

Source Section

Fach

sccpchOffset_CM_PCH

Radio timing offset inside a radio frame. (SCCPCH parameter) { long, Range = 0..149, Default=20 }

Data Source

Bulk CM

Source Section

Pch

secondarySchPower

Secondary SCH power, relative to the primaryCpichPower value. { long, Range = -350..150, Default=-35 }

Data Source

Bulk CM

Source Field

un:secondarySchPower

Source Section

UtranCell

© Copyright IBM Corp. 2008, 2009. All Rights Reserved.

sf16Adm

Admission policy for admission on the number of Spreading Factor = 16 (traffic class=non-guaranteed, setup type=<all>) simultaneous connections in a cell in DL (SF histogram). { long, Range = 0..16, Default=16 }

Data Source

Bulk CM

Source Section

UtranCell

sf16AdmUl

Admission limit (traffic class = non-guaranteed/guaranteed-hs, admission class = handover or other) for number of radio links with UL SF = 16.

Data Source

Bulk CM

Source Field

es:sf16AdmUl

Source Section

UtranCell

sf16gAdm

Admission limit for RLs with Spreading Factor (SF) =16 in DL (guaranteed admission requests). { long, Range = 0..16, Default=16 }

Data Source

Bulk CM

Source Section

UtranCell

sf32Adm

Admission policy for admission on the number of Spreading Factor = 32 (traffic class=non-guaranteed, setup type=<all>) simultaneous connections in a cell in DL (SF histogram). { long, Range = 0..32, Default=32 }

Data Source

Bulk CM

Source Section

UtranCell

sf4AdmUl

Max. number of simultaneous connections in a cell in UL where each connection?s Spreading Factor (SF) = 4 (service class = non-guaranteed/guaranteed-hs, setup type=all). { long, Range = 0..1000, Default=0 }

Data Source

Bulk CM

Source Section

UtranCell

sf4UlPathlossThreshold

The maximum path loss value between the UE and HS-serving cell at which a 384/HS RAB is allowed to be established. { long, Range = 15..170, Default=170 }

Data Source

Bulk CM

Source Section

UtranCell

sf8Adm

Admission policy for admission on the number of Spreading Factor = 8 (traffic class=non-guaranteed, setup type=<all>) simultaneous connections in a cell in DL (SF histogram). { long, Range = 0..8, Default=8 }

Data Source

Bulk CM

Source Section

UtranCell

© Copyright IBM Corp. 2008, 2009. All Rights Reserved.

sf8AdmUl

Admission limit (traffic class = non-guaranteed/guaranteed-hs, admission class = handover or other) for number of radio links with UL SF = 8.

Data Source

Bulk CM

Source Field

es:sf8AdmUl

Source Section

UtranCell

sHcsRat

RAT specific threshold in the serving cell used in the inter-RAT measurement rules. { long, Range = -105..91, Default=-105 }

Data Source

Bulk CM

Source Section

UtranCell

sib1PlmnScopeValueTag

The area identity part of PLMN scope value tages for SIB1 { long, Range = 0..31, Default=Mandatory }

Data Source

Bulk CM

Source Section

UtranCell

sInterSearch

The decision on when measurements on inter frequencies shall be performed. { long, Range = 0..27, Default=0 }

Data Source

Bulk CM

Source Section

UtranCell

sIntraSearch

The decision on when measurements on intra frequencies shall be performed. { long, Range = 0..27, Default=0 }

Data Source

Bulk CM

Source Section

UtranCell

snDirectedRetryTarget

snDirected Retry Target

Data Source

Bulk CM

Source Field

es:snDirectedRetryTarget

Source Section

UtranCell

sRatSearch

The decision on when measurements on GSM frequencies shall be performed is made using this parameter in { long, Range = -32..20, Default=4 }

Data Source

Bulk CM

Source Section

UtranCell

tCell

Timing delay used for defining start of SCH, CPICH and the DL scrambling codes. { long, Range = 0..9, Default=Mandatory }

© Copyright IBM Corp. 2008, 2009. All Rights Reserved.

Data Source

Bulk CM

Source Section

UtranCell

tfsFlexConstant

System constant. { long, Default=10 }

Data Source

Bulk CM

Source Section

UtranCell

tmCongAction

Interval between periodic congestion resolve actions on guaranteed traffic class connections in a cell. { long, Range = 300..100000, Default=2000 }

Data Source

Bulk CM

Source Section

UtranCell

tmCongActionGhs

Interval betwen periodic congestion resolve actions on guaranteed-hs traffic class connections in a cell. { long, Range = 10..100000, Default=300 }

Data Source

Bulk CM

Source Section

UtranCell

tmCongActionNg

Interval between periodic congestion resolve actions on non-guaranteed traffic class connections in a cell. { long, Range = 500..100000, Default=800 }

Data Source

Bulk CM

Source Section

UtranCell

tmInitialG

Minimum time before congestion resolve actions are initiated on guaranteed traffic class connections in a cell (after detection of DL cell congestion). { long, Range = 10..100000, Default=3000 }

Data Source

Bulk CM

Source Section

UtranCell

tmInitialGhs

Minimum time before congestion resolve actions are initiated on guaranteed-hs traffic class connections in a cell (after detection of DL cell congestion). { long, Range = 10..100000, Default=500 }

Data Source

Bulk CM

Source Section

UtranCell

treSelection

Control of cell selection/reselection. Time-to-trigger for cell reselection in seconds. { long, Range = 0..31, Default=2 }

Data Source

Bulk CM

Source Section

UtranCell

© Copyright IBM Corp. 2008, 2009. All Rights Reserved.

txFilter

System constant. { long, Default=5 }

Data Source

Bulk CM

Source Section

UtranCell

txInterval

System constant. { long, Default=1000 }

Data Source

Bulk CM

Source Section

UtranCell

uarfcnDl

The DL UTRA absolute Radio Frequency Channel number, UARFCN (Ref. 3GPP TS 25.433). { long, Range = 412, 437, 462, 487, 512, 537, 562, 587, 612, 637, 662, 687, 1007, 1012,, Default=Mandatory }

Data Source

Bulk CM

Source Field

un:uarfcnDl

Source Section

UtranCell

uarfcnUl

The UL UTRA absolute Radio Frequency Channel number, UARFCN (Ref. 3GPP TS 25.433). { uarfcnUl, Range = 12, 37, 62, 87, 112, 137, 162, 187, 212, 237, 262, 287, 782, 787, 807, 812, Default=Mandatory }

Data Source

Bulk CM

Source Field

un:uarfcnUl

Source Section

UtranCell

ulPathlossCheckEnabled

Enable/disable the path loss check for UL 384/HS RABs { BooleanVals, Default= FALSE }

Data Source

Bulk CM

Source Section

UtranCell

usageState

The usage state of the Packet Data Router device. { string, Default= IDLE, ReadOnly, NonPersistent, NoNotification}

Data Source

Bulk CM

Source Section

Pch

usedFreqThresh2dEcno

Threshold for event 2d for the used frequency when the measurement quantity is Ec/No. { long, Range = -24..0, Default=-12 }

Data Source

Bulk CM

Source Section

UtranCell

usedFreqThresh2dRscp

Threshold for event 2d for the used frequency when the measurement quantity is RSCP. { long, Range = -115..-25, Default=-97 }

© Copyright IBM Corp. 2008, 2009. All Rights Reserved.

Data Source

Bulk CM

Source Section

UtranCell

userLabel

Provides the possibility to put a user-friendly label on the MO instance. The value is not used by the RNC. { string, LengthRange = 0..128, Default= "" }

Data Source

Bulk CM

Source Field

un:userLabel

Source Section

UtranCell

userLabel_CM

Provides the possibility to put a user-friendly label on the MO instance. The value is not used by the RNC. { string, LengthRange = 0..128, Default= "" }

Data Source

Bulk CM

Source Section

Fach

userLabel_CM_HSDSCH

Free to use

Data Source

Bulk CM

Source Field

es:userLabel

Source Section

Hsdsch

userLabel_CM_PCH

Provides the possibility to put a user-friendly label on the MO instance. The value is not used by the RNC. { string, LengthRange = 0..128, Default= "" }

Data Source

Bulk CM

Source Section

Pch

utranCellIubLink

Fully Distinguished Name of the Iub link object associcated with this UtranCell.

Data Source

Bulk CM

Source Field

un:utranCellIubLink

Source Section

UtranCell

utranCellPosition_PC1

Each polygon corner (used for UE positioning) is described by <latitude sign (north or south)>:<latitude>:<longitude>. For polygon corner 1 is represented with position 0,1 and 2. The other configured polygon corners follows in the sequence. There must at least be three corners (that is 9 positions in the sequence) configured in a polygon when the function is active/used.

Data Source

Bulk CM

Source Field

es:utranCellPosition

© Copyright IBM Corp. 2008, 2009. All Rights Reserved.

Source Section

UtranCell

utranCellPosition_PC10

Each polygon corner (used for UE positioning) is described by <latitude sign (north or south)>:<latitude>:<longitude>. For polygon corner 1 is represented with position 0,1 and 2. The other configured polygon corners follows in the sequence. There must at least be three corners (that is 9 positions in the sequence) configured in a polygon when the function is active/ used.

Data Source

Bulk CM

Source Field

es:utranCellPosition

Source Section

UtranCell

utranCellPosition_PC11

Each polygon corner (used for UE positioning) is described by <latitude sign (north or south)>:<latitude>:<longitude>. For polygon corner 1 is represented with position 0,1 and 2. The other configured polygon corners follows in the sequence. There must at least be three corners (that is 9 positions in the sequence) configured in a polygon when the function is active/ used.

Data Source

Bulk CM

Source Field

es:utranCellPosition

Source Section

UtranCell

utranCellPosition_PC12

Each polygon corner (used for UE positioning) is described by <latitude sign (north or south)>:<latitude>:<longitude>. For polygon corner 1 is represented with position 0,1 and 2. The other configured polygon corners follows in the sequence. There must at least be three

corners (that is 9 positions in the sequence) configured in a polygon when the function is active/used.

Data Source

Bulk CM

Source Field

es:utranCellPosition

Source Section

UtranCell

utranCellPosition_PC13

Each polygon corner (used for UE positioning) is described by <latitude sign (north or south)>:<latitude>:<longitude>. For polygon corner 1 is represented with position 0,1 and 2. The other configured polygon corners follows in the sequence. There must at least be three corners (that is 9 positions in the sequence) configured in a polygon when the function is active/used.

Data Source

Bulk CM

Source Field

es:utranCellPosition

Source Section

UtranCell

utranCellPosition_PC14

Each polygon corner (used for UE positioning) is described by <latitude sign (north or south)>:<latitude>:<longitude>. For polygon corner 1 is represented with position 0,1 and 2. The other configured polygon corners follows in the sequence. There must at least be three corners (that is 9 positions in the sequence) configured in a polygon when the function is active/used.

Data Source

Bulk CM

Source Field

es:utranCellPosition

© Copyright IBM Corp. 2008, 2009. All Rights Reserved.

Source Section

UtranCell

utranCellPosition_PC15

Each polygon corner (used for UE positioning) is described by <latitude sign (north or south)>:<latitude>:<longitude>. For polygon corner 1 is represented with position 0,1 and 2. The other configured polygon corners follows in the sequence. There must at least be three corners (that is 9 positions in the sequence) configured in a polygon when the function is active/ used.

Data Source

Bulk CM

Source Field

es:utranCellPosition

Source Section

UtranCell

utranCellPosition_PC2

Each polygon corner (used for UE positioning) is described by <latitude sign (north or south)>:<latitude>:<longitude>. For polygon corner 1 is represented with position 0,1 and 2. The other configured polygon corners follows in the sequence. There must at least be three corners (that is 9 positions in the sequence) configured in a polygon when the function is active/ used.

Data Source

Bulk CM

Source Field

es:utranCellPosition

Source Section

UtranCell

utranCellPosition_PC3

Each polygon corner (used for UE positioning) is described by <latitude sign (north or south)>:<latitude>:<longitude>. For polygon corner 1 is represented with position 0,1 and 2. The other configured polygon corners follows in the sequence. There must at least be three

corners (that is 9 positions in the sequence) configured in a polygon when the function is active/used.

Data Source

Bulk CM

Source Field

es:utranCellPosition

Source Section

UtranCell

utranCellPosition_PC4

Each polygon corner (used for UE positioning) is described by <latitude sign (north or south)>:<latitude>:<longitude>. For polygon corner 1 is represented with position 0,1 and 2. The other configured polygon corners follows in the sequence. There must at least be three corners (that is 9 positions in the sequence) configured in a polygon when the function is active/used.

Data Source

Bulk CM

Source Field

es:utranCellPosition

Source Section

UtranCell

utranCellPosition_PC5

Each polygon corner (used for UE positioning) is described by <latitude sign (north or south)>:<latitude>:<longitude>. For polygon corner 1 is represented with position 0,1 and 2. The other configured polygon corners follows in the sequence. There must at least be three corners (that is 9 positions in the sequence) configured in a polygon when the function is active/used.

Data Source

Bulk CM

Source Field

es:utranCellPosition

© Copyright IBM Corp. 2008, 2009. All Rights Reserved.

Source Section

UtranCell

utranCellPosition_PC6

Each polygon corner (used for UE positioning) is described by <latitude sign (north or south)>:<latitude>:<longitude>. For polygon corner 1 is represented with position 0,1 and 2. The other configured polygon corners follows in the sequence. There must at least be three corners (that is 9 positions in the sequence) configured in a polygon when the function is active/ used.

Data Source

Bulk CM

Source Field

es:utranCellPosition

Source Section

UtranCell

utranCellPosition_PC7

Each polygon corner (used for UE positioning) is described by <latitude sign (north or south)>:<latitude>:<longitude>. For polygon corner 1 is represented with position 0,1 and 2. The other configured polygon corners follows in the sequence. There must at least be three corners (that is 9 positions in the sequence) configured in a polygon when the function is active/ used.

Data Source

Bulk CM

Source Field

es:utranCellPosition

Source Section

UtranCell

utranCellPosition_PC8

Each polygon corner (used for UE positioning) is described by <latitude sign (north or south)>:<latitude>:<longitude>. For polygon corner 1 is represented with position 0,1 and 2. The other configured polygon corners follows in the sequence. There must at least be three

corners (that is 9 positions in the sequence) configured in a polygon when the function is active/used.

Data Source

Bulk CM

Source Field

es:utranCellPosition

Source Section

UtranCell

utranCellPosition_PC9

Each polygon corner (used for UE positioning) is described by <latitude sign (north or south)>:<latitude>:<longitude>. For polygon corner 1 is represented with position 0,1 and 2. The other configured polygon corners follows in the sequence. There must at least be three corners (that is 9 positions in the sequence) configured in a polygon when the function is active/used.

Data Source

Bulk CM

Source Field

es:utranCellPosition

Source Section

UtranCell

UtranRelation Primitive Calculations

The following is a list of primitive calculations for the UtranRelation entity.

adjacentCell

FDN - Reference to UtranCell (RNC mirror) or ExternalUtranCell (SubNetwork) which contains the specification of the adjacent cell.

Calculation

```
UtranRelationName
```

© Copyright IBM Corp. 2008, 2009. All Rights Reserved.

GRAPHmultiLineSeparator

Special Control Field for Multi-Line Graphs

Calculation

```
""
```

Inter_Frequency_Handover_Success_Rate_CS_non_speech

Hard handover success rate between frequencies in UtranCell for CS non-speech calls.

Calculation

```
100.0 * pmSuccNonBlindInterFreqHoCsConversational / pmAttNonBlindInter-
FreqHoCsConversational
```

Inter_Frequency_Handover_Success_Rate_Other_Services

Hard handover success rate between frequencies in UtranCell for other services.

Calculation

```
100.0 * pmSuccNonBlindInterFreqHoStreamingOther / pmAttNonBlindInter-
FreqHoStreamingOther
```

Inter_Frequency_Handover_Success_Rate_PS_Interactive_64OrLess

Hard handover success rate between frequencies in UtranCell for PS interactive calls with data rate less than or equal 64kbps.

Calculation

```
100.0 * pmSuccNonBlindInterFreqHoPsInteractiveLess64 /
pmAttNonBlindInterFreqHoPsInteractiveLess64
```

Inter_Frequency_Handover_Success_Rate_PS_Interactive_Greater_64

Hard handover success rate between frequencies in UtranCell for PS interactive calls with data rate larger than 64kbps.

Calculation

```
100.0 * pmSuccNonBlindInterFreqHoPsInteractiveGreater64 /
pmAttNonBlindInterFreqHoPsInteractiveGreater64
```

Inter_Frequency_HO_Success_Rate_Speech

Hard handover success rate between frequencies in UtranCell for speech calls

Calculation

```
100.0 * pmSuccNonBlindInterFreqHoCsSpeech12 /
pmAttNonBlindInterFreqHoCsSpeech12
```

NUMDAYS

of days in Report

Calculation

```
DAYSINREPORT()
```

NUMHOURS

of hours in Summation Data

Calculation

RlAddSuccBestCellSpeechRate

Percentage of succesfully added Radio Link additions for speech 12.2 kbps CS RAB that succeeded

Calculation

```
pmRlAddSuccessBestCellSpeech * 100.0 / pmRlAddAttemptsBestCellSpeech
```

UtranRelation Peg Counts

The following is a list of peg counts for the UtranRelation entity.

cId

cId is the identifier of a cell in one RNC (Ref. 3GPP TS 25.401).

Data Source

Bulk CM

Source Field

un:cId

Source Section

ExternalUtranCell

individualOffset

Used in UE function event-reporting. This offset is added to the measured quantity before the UE evaluates if an event has occured. { long, Range = -100..100, Default=0 }

© Copyright IBM Corp. 2008, 2009. All Rights Reserved.

Data Source

Bulk CM

Source Section

ExternalUtranCell

lac

Location Area Code, LAC (Ref. 3GPP TS 23.003)

Data Source

Bulk CM

Source Field

un:lac

Source Section

ExternalUtranCell

loadSharingCandidate

Identifies the target cell as an interfrequency load sharing candidate of the source cell. 0 = FALSE, 1 = TRUE

Data Source

Bulk CM

Source Field

es:loadSharingCandidate

Source Section

UtranRelation

maxTxPowerUl

The maximum UE transmission power on the RACH when accessing the system. Used in UE functions for cell selection/reselection in idle mode and connected mode. Also used by UTRAN to control the maximum TX power level an UE may use. { long, Range = -50..33, Default=100, 100, }

Data Source

Bulk CM

Source Section

ExternalUtranCell

mcc

Mobile Country Code, MCC. It is a part of the PLMN Id (Ref. 3GPP TS 23.003).

Data Source

Bulk CM

Source Field

un:mcc

Source Section

ExternalUtranCell

mnc

Mobile Network Code, MNC. It is a part of the PLMN Id (Ref. 3GPP TS 23.003).

Data Source

Bulk CM

Source Field

un:mnc

Source Section

ExternalUtranCell

PERLENSEC

Period Length

Source Field

PERLENSEC

Source Section

UtranRelation_WMGeneral

© Copyright IBM Corp. 2008, 2009. All Rights Reserved.

PERLENSEC_K

Period length in seconds aggregation summation in time domain and aggregation maximum between Network Elements.

Data Source

NodeB_RNC

Source Field

PERLENSEC

Source Section

UtranRelation_WMGeneral

pmAttLoadBasedIfho

Number of attempted outgoing inter-frequency handovers triggered by load, not including CNHHO. The decision to initiate handover is based on measurements performed by the UE on the target frequency.

Data Source

RNC

Source Field

pmAttLoadBasedIfho

Source Section

UtranRelation

pmAttNonBlindIfhoPsIntEul

Number of attempted non-blind outgoing inter-frequency handovers for the PS Interactive RAB mapped on EUL in the uplink. Used to monitor the number of times that UEs have been ordered to perform inter-frequency handover. The decision to initiate handover is based on measurements performed by the UE on the target frequency.

Data Source

RNC

Source Field

pmAttNonBlindIfhoPsIntEul

Source Section

UtranRelation

pmAttNonBlindIfhoPsIntHs

Number of attempted non-blind outgoing inter-frequency handovers for PS Interactive RABs mapped on HSDPA in the downlink. Used to monitor the number of times that UEs have been ordered to perform inter-frequency handover. The decision to initiate handover is based on measurements performed by the UE on the target frequency.

Data Source

RNC

Source Field

pmAttNonBlindIfhoPsIntHs

Source Section

UtranRelation

pmAttNonBlindIfhoPsStrHs

Number of attempted non-blind outgoing inter-frequency handovers for PS Streaming RABs mapped on HSDPA in the downlink. Used to monitor the number of times that UEs have been ordered to perform inter-frequency handover. The decision to initiate handover is based on measurements performed by the UE on the target frequency.

Data Source

RNC

Source Field

pmAttNonBlindIfhoPsStrHs

Source Section

UtranRelation

pmAttNonBlindInterFreqHoCsConversational

Number of attempted non-blind outgoing inter-frequency handovers for RAB = CS Conversational except speech

Data Source

NodeB_RNC_RXI

© Copyright IBM Corp. 2008, 2009. All Rights Reserved.

Source Field

pmAttNonBlindInterFreqHoCsConversational

Source Section

UtranRelation

pmAttNonBlindInterFreqHoCsSpeech12

Number of attempted non-blind outgoing inter-frequency handovers for RAB = Conversational speech

Data Source

NodeB_RNC_RXI

Source Field

pmAttNonBlindInterFreqHoCsSpeech12

Source Section

UtranRelation

pmAttNonBlindInterFreqHoPsInteractiveGreater64

Number of attempted non-blind outgoing inter-frequency handovers for RAB = Interactive greater than 64 kbps

Data Source

NodeB_RNC_RXI

Source Field

pmAttNonBlindInterFreqHoPsInteractiveGreater64

Source Section

UtranRelation

pmAttNonBlindInterFreqHoPsInteractiveLess64

Number of attempted non-blind outgoing inter-frequency handovers for RAB = Interactive less than or equal to 64 kbps

Data Source

NodeB_RNC_RXI

Source Field

pmAttNonBlindInterFreqHoPsInteractiveLess64

Source Section

UtranRelation

pmAttNonBlindInterFreqHoStreamingOther

Number of attempted non-blind outgoing inter-frequency handovers for RAB = Streaming

Data Source

NodeB_RNC_RXI

Source Field

pmAttNonBlindInterFreqHoStreamingOther

Source Section

UtranRelation

pmFailLoadBasedIfhoFailRev

Number of failed outgoing inter-frequency handovers triggered by load, not including CNHHO, where the UE fails to return to the present active set.

Data Source

RNC

Source Field

pmFailLoadBasedIfhoFailRev

Source Section

UtranRelation

pmFailLoadBasedIfhoRev

Number of failed outgoing inter-frequency handovers triggered by load, not including CNHHO, where the UE returns to the present active set.

Data Source

RNC

© Copyright IBM Corp. 2008, 2009. All Rights Reserved.

Source Field

pmFailLoadBasedIfhoRev

Source Section

UtranRelation

pmFailNoBlindIfhoFRevPsIntEul

Number of failed non-blind outgoing inter-frequency handovers, where the UE fails to return to the present active set, for PS Interactive RABs mapped on EUL in the uplink. Used to monitor the number of times that UEs that had been ordered to perform inter-frequency handover failed and got lost. The handover decision was based on measurements performed by the UE on the target frequency.

Data Source

RNC

Source Field

pmFailNonBlindIfhoFailRevPsIntEul

Source Section

UtranRelation

pmFailNonBlindIfhoFRevPsIntHs

Number of failed non-blind outgoing inter-frequency handovers, where the UE fails to return to the present active set, for PS Interactive RABs mapped on HSDPA in the downlink. Used to monitor the number of times that UEs that had been ordered to perform inter-frequency handover failed and got lost. The handover decision was based on measurements performed by the UE on the target frequency.

Data Source

RNC

Source Field

pmFailNonBlindIfhoFailRevPsIntHs

Source Section

UtranRelation

pmFailNonBlindIfhoFRevPsStrHs

Number of failed non-blind outgoing inter-frequency handovers, where the UE fails to return to the present active set, for PS Streaming RABs mapped on HSDPA in the downlink. Used to monitor the number of times that UEs that had been ordered to perform inter-frequency handover failed and got lost. The handover decision was based on measurements performed by the UE on the target frequency.

Data Source

RNC

Source Field

pmFailNonBlindIfhoFailRevPsStrHs

Source Section

UtranRelation

pmFailNonBlindIfhoRevPsIntEul

Number of failed non-blind outgoing inter-frequency handovers, where the UE returns to the present active set, for PS Interactive RABs mapped on EUL in the uplink. Used to monitor the number of times that UEs that had been ordered to perform inter-frequency handover reverted to the source frequency, due to the fact that they did not manage to synchronize on the target one. The handover decision was based on measurements performed by the UE on the target frequency.

Data Source

RNC

Source Field

pmFailNonBlindIfhoRevPsIntEul

Source Section

UtranRelation

pmFailNonBlindIfhoRevPsIntHs

Number of failed non-blind outgoing inter-frequency handovers, where the UE returns to the present active set, for PS Interactive RABs mapped on HSDPA in the downlink. Used to monitor the number of times that UEs that had been ordered to perform inter-frequency handover reverted to the source frequency, due to the fact that they did not manage to synchronize on the target one. The handover decision was based on measurements performed by the UE on the target frequency.

© Copyright IBM Corp. 2008, 2009. All Rights Reserved.

Data Source

RNC

Source Field

pmFailNonBlindIfhoRevPsIntHs

Source Section

UtranRelation

pmFailNonBlindIfhoRevPsStrHs

Number of failed non-blind outgoing inter-frequency handovers, where the UE returns to the present active set, for PS Streaming RABs mapped on HSDPA in the downlink. Used to monitor the number of times that UEs that had been ordered to perform inter-frequency handover reverted to the source frequency, due to the fact that they did not manage to synchronize on the target one. The handover decision was based on measurements performed by the UE on the target frequency.

Data Source

RNC

Source Field

pmFailNonBlindIfhoRevPsStrHs

Source Section

UtranRelation

pmFailNonBlindInterFreqHoFailRevertCsConversational

Number of failed non-blind outgoing inter-frequency handovers, where the UE fails to return to the present active set, for RAB = CS Conversational except speech

Data Source

NodeB_RNC_RXI

Source Field

pmFailNonBlindInterFreqHoFailRevertCsConversational

Source Section

UtranRelation

pmFailNonBlindInterFreqHoFailRevertCsSpeech12

Number of failed non-blind outgoing inter-frequency handovers, where the UE fails to return to the present active set, for RAB = CS speech

Data Source

NodeB_RNC_RXI

Source Field

pmFailNonBlindInterFreqHoFailRevertCsSpeech12

Source Section

UtranRelation

pmFailNonBlindInterFreqHoFailRevertPsInteractiveGreater64

Number of failed non-blind outgoing inter-frequency handovers, where the UE fails to return to the present active set, for RAB = Interactive greater than 64 kbps

Data Source

NodeB_RNC_RXI

Source Field

pmFailNonBlindInterFreqHoFailRevertPsInteractiveGreater64

Source Section

UtranRelation

pmFailNonBlindInterFreqHoFailRevertPsInteractiveLess64

Number of failed non-blind outgoing inter-frequency handovers, where the UE fails to return to the present active set, for RAB = Interactive less than or equal to 64 kbps

Data Source

NodeB_RNC_RXI

Source Field

pmFailNonBlindInterFreqHoFailRevertPsInteractiveLess64

Source Section

UtranRelation

© Copyright IBM Corp. 2008, 2009. All Rights Reserved.

pmFailNonBlindInterFreqHoFailRevertStreamingOther

Number of failed non-blind outgoing inter-frequency handovers, where the UE fails to return to the present active set, for RAB = Streaming and Others

Data Source

NodeB_RNC_RXI

Source Field

pmFailNonBlindInterFreqHoFailRevertStreamingOther

Source Section

UtranRelation

pmFailNonBlindInterFreqHoRevertCsConversational

Number of failed non-blind outgoing inter-frequency handovers, where the UE returns to the present active set, for RAB = CS Conversational except speech

Data Source

NodeB_RNC_RXI

Source Field

pmFailNonBlindInterFreqHoRevertCsConversational

Source Section

UtranRelation

pmFailNonBlindInterFreqHoRevertCsSpeech12

Number of failed non-blind outgoing inter-frequency handovers, where the UE returns to the present active set, for RAB = Conversational speech

Data Source

NodeB_RNC_RXI

Source Field

pmFailNonBlindInterFreqHoRevertCsSpeech12

Source Section

UtranRelation

pmFailNonBlindInterFreqHoRevertPsInteractiveGreater64

Number of failed non-blind outgoing inter-frequency handovers, where the UE returns to the present active set, for RAB = Interactive greater than 64 kbps

Data Source

NodeB_RNC_RXI

Source Field

pmFailNonBlindInterFreqHoRevertPsInteractiveGreater64

Source Section

UtranRelation

pmFailNonBlindInterFreqHoRevertPsInteractiveLess64

Number of failed non-blind outgoing inter-frequency handovers, where the UE returns to the present active set, for RAB = Interactive less than or equal to 64 kbps

Data Source

NodeB_RNC_RXI

Source Field

pmFailNonBlindInterFreqHoRevertPsInteractiveLess64

Source Section

UtranRelation

pmFailNonBlindInterFreqHoRevertStreamingOther

Number of failed non-blind outgoing inter-frequency handovers, where the UE returns to the present active set, for RAB = Streaming and Others

Data Source

NodeB_RNC_RXI

Source Field

pmFailNonBlindInterFreqHoRevertStreamingOther

Source Section

UtranRelation

© Copyright IBM Corp. 2008, 2009. All Rights Reserved.

pmNoAttOutCnhhoCsNonSpeech

Number of attempts to perform an outgoing CN Hard Handover for a CS RAB. When there are more than one cell in AS, the counter is stepped in the best cell (other than speech).

Data Source

RNC

Source Field

pmNoAttOutCnhhoCsNonSpeech

Source Section

UtranRelation

pmNoAttOutCnhhoPsConnRelease

Number of connection releases attempts due to that a CN HHO is needed. When there are more than one cell in AS, the counter is stepped in the best cell.

Data Source

RNC

Source Field

pmNoAttOutCnhhoPsConnRelease

Source Section

UtranRelation

pmNoAttOutCnhhoSpeech

Number of attempts to perform an outgoing CN Hard Handover for speech RAB. When there are more than one cell in AS, the counter is stepped in the best cell.

Data Source

RNC

Source Field

pmNoAttOutCnhhoSpeech

Source Section

UtranRelation

pmNoAttOutLoadBasedCnhho

Number of attempted outgoing CN Hard Handovers triggered by load.

Data Source

RNC

Source Field

pmNoAttOutLoadBasedCnhho

Source Section

UtranRelation

pmNoSuccOutCnhhoCsNonSpeech

Number of successful outgoing CN Hard Handover for a CS RAB. When there are more than one cell in AS, the counter is stepped in the best cell (other than speech).

Data Source

RNC

Source Field

pmNoSuccOutCnhhoCsNonSpeech

Source Section

UtranRelation

pmNoSuccOutCnhhoSpeech

Number of successful outgoing CN Hard Handover for speech RAB. When there are more than one cell in AS, the counter is stepped in the best cell.

Data Source

RNC

Source Field

pmNoSuccOutCnhhoSpeech

Source Section

UtranRelation

© Copyright IBM Corp. 2008, 2009. All Rights Reserved.

pmNoSuccOutLoadBasedCnhho

Number of successful outgoing CN Hard Handovers triggered by load.

Data Source

RNC

Source Field

pmNoSuccOutLoadBasedCnhho

Source Section

UtranRelation

pmRlAddAttemptsBestCellCsConvers

Number Radio Link additions attempted for conversational 64 kbps CS RAB where this UTRAN relation defines a neigbour relation from the best cell in the current active set to the cell that is attempted to be added

Data Source

NodeB_RNC_RXI

Source Field

pmRlAddAttemptsBestCellCsConvers

Source Section

UtranRelation

pmRlAddAttemptsBestCellPacketHigh

Number Radio Link additions attempted for interactive PS RAB with data rate higher than 64 kbps where this UTRAN relation defines a neigbour relation between the best cell in the current active set and the cell that is attempted to be added

Data Source

NodeB_RNC_RXI

Source Field

pmRlAddAttemptsBestCellPacketHigh

Source Section

UtranRelation

pmRlAddAttemptsBestCellPacketLow

Number Radio Link additions attempted for interactive PS RAB with data rate of 64 kbps or less where this UTRAN relation defines a neigbour relation from the best cell in the current active set to the cell that is attempted to be added

Data Source

NodeB_RNC_RXI

Source Field

pmRlAddAttemptsBestCellPacketLow

Source Section

UtranRelation

pmRlAddAttemptsBestCellSpeech

Number Radio Link additions attempted for speech 12.2 kbps CS RAB where this UTRAN relation defines a neigbour relation from the best cell in the current active set to the cell that is attempted to be added

Data Source

NodeB_RNC_RXI

Source Field

pmRlAddAttemptsBestCellSpeech

Source Section

UtranRelation

pmRlAddAttemptsBestCellStandAlone

Number Radio Link additions attempted for RRC only connections where this UTRAN relation defines a neigbour relation from the best cell in the current active set to the cell that is attempted to be added

Data Source

NodeB_RNC_RXI

Source Field

pmRlAddAttemptsBestCellStandAlone

© Copyright IBM Corp. 2008, 2009. All Rights Reserved.

Source Section

UtranRelation

pmRlAddAttemptsBestCellStream

Number Radio Link additions attempted for streaming 57.6 kbps CS RAB where this UTRAN relation defines a neigbour relation from the best cell in the current active set to the cell that is attempted to be added

Data Source

NodeB_RNC_RXI

Source Field

pmRlAddAttemptsBestCellStream

Source Section

UtranRelation

pmRlAddSuccessBestCellCsConvers

Number Radio Link additions for conversational 64 kbps CS RAB that succeeded where this UTRAN relation defines a neigbour relation from the best cell in the previous active set to the cell that has just been succesfully added

Data Source

NodeB_RNC_RXI

Source Field

pmRlAddSuccessBestCellCsConvers

Source Section

UtranRelation

pmRlAddSuccessBestCellPacketHigh

Number Radio Link additions for interactive PS RAB with data rate higher than 64 kbps that succeeded where this UTRAN relation defines a neigbour relation from the best cell in the previous active set to the cell that has just been succesfully added

Data Source

NodeB_RNC_RXI

Source Field

pmRlAddSuccessBestCellPacketHigh

Source Section

UtranRelation

pmRlAddSuccessBestCellPacketLow

Number Radio Link additions for interactive PS RAB with data rate of 64 kbps or less that succeeded where this UTRAN relation defines a neigbour relation from the best cell in the previous active set to the cell that has just been successfully added

Data Source

NodeB_RNC_RXI

Source Field

pmRlAddSuccessBestCellPacketLow

Source Section

UtranRelation

pmRlAddSuccessBestCellSpeech

Number Radio Link additions for speech 12.2 kbps CS RAB that succeeded where this UTRAN relation defines a neigbour relation between the best cell in the previous active set and the cell that has just been succesfully added

Data Source

NodeB_RNC_RXI

Source Field

pmRlAddSuccessBestCellSpeech

Source Section

UtranRelation

pmRlAddSuccessBestCellStandAlone

Number Radio Link additions for RRC only connections that succeeded where this UTRAN relation defines a neigbour relation from the best cell in the previous active set to the cell that has just been successfully added

© Copyright IBM Corp. 2008, 2009. All Rights Reserved.

Data Source

NodeB_RNC_RXI

Source Field

pmRlAddSuccessBestCellStandAlone

Source Section

UtranRelation

pmRlAddSuccessBestCellStream

Number Radio Link additions for streaming 57.6 kbps CS RAB that succeeded where this UTRAN relation defines a neigbour relation from the best cell in the previous active set to the cell that has just been successfully added

Data Source

NodeB_RNC_RXI

Source Field

pmRlAddSuccessBestCellStream

Source Section

UtranRelation

pmSuccLoadBasedIfho

Number of successful outgoing inter-frequency handovers triggered by load, not including CNHHO.

Data Source

RNC

Source Field

pmSuccLoadBasedIfho

Source Section

UtranRelation

pmSuccNonBlindIfhoPsIntEul

Number of successful non-blind outgoing inter-frequency handovers for PS Interactive RABs mapped on EUL in the uplink. Used to monitor the number of times that UEs have succeeded in

performing inter-frequency handover. The decision to initiate handover is based on measurements performed by the UE on the target frequency.

Data Source

RNC

Source Field

pmSuccNonBlindIfhoPsIntEul

Source Section

UtranRelation

pmSuccNonBlindIfhoPsIntHs

Number of successful non-blind outgoing inter-frequency handovers for PS Interactive RABs mapped on HSDPA in the downlink. Used to monitor the number of times that UEs have succeeded in performing inter-frequency handover. The decision to initiate handover is based on measurements performed by the UE on the target frequency.

Data Source

RNC

Source Field

pmSuccNonBlindIfhoPsIntHs

Source Section

UtranRelation

pmSuccNonBlindIfhoPsStrHs

Number of successful non-blind outgoing inter-frequency handovers for PS Streaming RABs mapped on HSDPA in the downlink. Used to monitor the number of times that UEs have succeeded in performing inter-frequency handover. The decision to initiate handover is based on measurements performed by the UE on the target frequency.

Data Source

RNC

Source Field

pmSuccNonBlindIfhoPsStrHs

© Copyright IBM Corp. 2008, 2009. All Rights Reserved.

Source Section

UtranRelation

pmSuccNonBlindInterFreqHoCsConversational

Number of successful non-blind outgoing inter-frequency handovers for RAB = CS Conversational except speech

Data Source

NodeB_RNC_RXI

Source Field

pmSuccNonBlindInterFreqHoCsConversational

Source Section

UtranRelation

pmSuccNonBlindInterFreqHoCsSpeech12

Number of successful non-blind outgoing inter-frequency handovers for RAB = Conversational speech

Data Source

NodeB_RNC_RXI

Source Field

pmSuccNonBlindInterFreqHoCsSpeech12

Source Section

UtranRelation

pmSuccNonBlindInterFreqHoPsInteractiveGreater64

Number of successful non-blind outgoing inter-frequency handovers for RAB = Interactive greater than 64 kbps

Data Source

NodeB_RNC_RXI

Source Field

pmSuccNonBlindInterFreqHoPsInteractiveGreater64

Source Section

UtranRelation

pmSuccNonBlindInterFreqHoPsInteractiveLess64

Number of successful non-blind outgoing inter-frequency handovers for RAB = Interactive less than or equal to 64 kbps

Data Source

NodeB_RNC_RXI

Source Field

pmSuccNonBlindInterFreqHoPsInteractiveLess64

Source Section

UtranRelation

pmSuccNonBlindInterFreqHoStreamingOther

Number of successful non-blind outgoing inter-frequency handovers for RAB = Streaming

Data Source

NodeB_RNC_RXI

Source Field

pmSuccNonBlindInterFreqHoStreamingOther

Source Section

UtranRelation

primaryCpichPower

The power of the primary CPICH channel in the cell (Ref. 3GPP TS 25.433).

Data Source

Bulk CM

Source Field

un:primaryCpichPower

© Copyright IBM Corp. 2008, 2009. All Rights Reserved.

Source Section

ExternalUtranCell

primaryScramblingCode

The primary DL scrambling code used by the cell (Ref. 3GPP TS 25.433). { long, Range = 0..511, Default=Mandatory }

Data Source

Bulk CM

Source Field

un:primaryScramblingCode

Source Section

ExternalUtranCell

qOffset1sn

Maps to rnc.LCell.outInterFreqFDDAdjCells.qOffset1

Data Source

Bulk CM

Source Field

lu:qOffset1

Source Section

UtranRelation

qOffset2sn

Maps to rnc.LCell.outInterFreqFDDAdjCells.qOffset2

Data Source

Bulk CM

Source Field

lu:qOffset2

Source Section

UtranRelation

qQualMin

Used in UE functions for cell selection/reselection in idle mode and connected mode. Minimum required (acceptable) quality level in the cell (dB). Used to set cell border between two cells. { long, Range = -24..0, Default=100, 100, }

Data Source

Bulk CM

Source Section

ExternalUtranCell

qRxLevMin

Used in UE functions for cell selection/reselection in idle mode and connected mode. Minimum required (acceptable) RX level in the cell. (dBm). Value launched by System information (SIB11) for each intrafrequency measurement object corresponding to adjace { long, Range = -115..-25, Default=100, 100, }

Data Source

Bulk CM

Source Section

ExternalUtranCell

rac

Routing Area Code, RAC (Ref. 3GPP TS 23.003)

Data Source

Bulk CM

Source Field

un:rac

Source Section

ExternalUtranCell

© Copyright IBM Corp. 2008, 2009. All Rights Reserved.

reservedBy

Reference to the UtranRelation MO that corresponds to this ExternalUtranCell (having a reference to this ExternalUtranCell). { sequence<UtranRelation,*>, Default = empty, Default=, ReadOnly, }

Data Source

Bulk CM

Source Section

ExternalUtranCell

rncId

Unique RNC ID of the External RNC (Ref. 3GPP TS 23.003).

Data Source

Bulk CM

Source Field

un:rncId

Source Section

ExternalUtranCell

uarfcnDl

The DL UTRA absolute Radio Frequency Channel number, UARFCN (Ref. 3GPP TS 25.433). { long, Range = 412, 437, 462, 487, 512, 537, 562, 587, 612, 637, 662, 687, 1007, 1012,, Default=Mandatory }

Data Source

Bulk CM

Source Field

un:uarfcnDl

Source Section

ExternalUtranCell

uarfcnUl

The UL UTRA absolute Radio Frequency Channel number, UARFCN (Ref. 3GPP TS 25.433). { long, Range = 12, 37, 62, 87, 112, 137, 162, 187, 212, 237, 262, 287, 782, 787, 807, 812,, Default=Mandatory }

Data Source

Bulk CM

Source Field

un:uarfcnUl

Source Section

ExternalUtranCell

userLabel

Provides the possibility to put a user-friendly label on the MO instance. The value is not used by the RNC. { string, LengthRange = 0..128, Default= "" }

Data Source

Bulk CM

Source Field

un:userLabel

Source Section

ExternalUtranCell

UtranRelationName

Pointer to UTRAN cell Relation or external UTRAN cell. Fully Distinguished Name of the corresponding object.

Data Source

Bulk CM

Source Field

un:adjacentCell

Source Section

UtranRelation

© Copyright IBM Corp. 2008, 2009. All Rights Reserved.

Vc12Ttp_NodeB Primitive Calculations

The following is a list of primitive calculations for the Vc12Ttp_NodeB entity.

GRAPHmultiLineSeparator

Special Control Field for Multi-Line Graphs

Calculation

```
""
```

NUMDAYS

of days in Report

Calculation

```
DAYSINREPORT()
```

NUMHOURS

of hours in Summation Data

Calculation

Vc12Ttp_NodeB Peg Counts

The following is a list of peg counts for the Vc12Ttp_NodeB entity.

NodeB_RELEASE

Release

Data Source

NodeB_RXI

Source Field

NodeB_RELEASE

Source Section

Vc12Ttp_NodeB

PERLENSEC

Period length in seconds

Source Field

PERLENSEC

Source Section

Vc12Ttp_NodeB_WMGeneral

PERLENSEC_K

Period length in seconds aggregation summation in time domain and aggregation maximum between Network Elements.

Source Field

PERLENSEC

Source Section

Vc12Ttp_NodeB_WMGeneral

pmVcBbe

Transmission Background Block Errors (BBE). Number of errored blocks not being part of a SES.

Data Source

NodeB_RXI

Source Field

pmVcBbe

Source Section

Vc12Ttp

pmVcEs

The total number of Errored Seconds.

Data Source

NodeB_RXI

Source Field

pmVcEs

© Copyright IBM Corp. 2008, 2009. All Rights Reserved.

Source Section

Vc12Ttp

pmVcSes

The total number of Severly Errored Seconds.

Data Source

NodeB_RXI

Source Field

pmVcSes

Source Section

Vc12Ttp

pmVcUas

Transmission Unavailable Seconds (UAS). The accumulated unavailable time in seconds during the interval. Unavailable time starts when 10 consecutive Severely Errored Seconds (SES) are detected (them being part of the unavailable time) and ends when 10 consecutive non SES are detected.

Data Source

NodeB_RXI

Source Field

pmVcUas

Source Section

Vc12Ttp

Vc12Ttp_RNC Primitive Calculations

The following is a list of primitive calculations for the Vc12Ttp_RNC entity.

GRAPHmultiLineSeparator

Special Control Field for Multi-Line Graphs

Calculation

""

NUMDAYS

of days in Report

Calculation

```
DAYSINREPORT()
```

NUMHOURS

of hours in Summation Data

Calculation

Vc12Ttp_RNC Peg Counts

The following is a list of peg counts for the Vc12Ttp_RNC entity.

PERLENSEC

Period length in seconds

Source Field

PERLENSEC

Source Section

Vc12Ttp_RNC_WMGeneral

PERLENSEC_K

Period length in seconds aggregation summation in time domain and aggregation maximum between Network Elements.

Source Field

PERLENSEC

Source Section

Vc12Ttp_RNC_WMGeneral

pmVcBbe

Transmission Background Block Errors (BBE). Number of errored blocks not being part of a SES.

© Copyright IBM Corp. 2008, 2009. All Rights Reserved.

Data Source

RNC_RXI

Source Field

pmVcBbe

Source Section

Vc12Ttp

pmVcEs

The total number of Errored Seconds.

Data Source

RNC_RXI

Source Field

pmVcEs

Source Section

Vc12Ttp

pmVcSes

The total number of Severly Errored Seconds.

Data Source

RNC_RXI

Source Field

pmVcSes

Source Section

Vc12Ttp

pmVcUas

Transmission Unavailable Seconds (UAS). The accumulated unavailable time in seconds during the interval. Unavailable time starts when 10 consecutive Severely Errored Seconds (SES) are detected (them being part of the unavailable time) and ends when 10 consecutive non SES are detected.

Data Source

RNC_RXI

Source Field

pmVcUas

Source Section

Vc12Ttp

RNC_RELEASE

Release

Data Source

RNC_RXI

Source Field

RNC_RELEASE

Source Section

Vc12Ttp_RNC

Vc4Ttp_NodeB Primitive Calculations

The following is a list of primitive calculations for the Vc4Ttp_NodeB entity.

GRAPHmultiLineSeparator

Special Control Field for Multi-Line Graphs

Calculation

```
""
```

NUMDAYS

of days in Report

Calculation

```
DAYSINREPORT()
```

NUMHOURS

of hours in Summation Data

© Copyright IBM Corp. 2008, 2009. All Rights Reserved.

Calculation

Vc4Ttp_NodeB Peg Counts

The following is a list of peg counts for the Vc4Ttp_NodeB entity.

NodeB_RELEASE

Release

Data Source

NodeB_RXI

Source Field

NodeB_RELEASE

Source Section

Vc4Ttp_NodeB

PERLENSEC

Period length in seconds

Source Field

PERLENSEC

Source Section

Vc4Ttp_NodeB_WMGeneral

PERLENSEC_K

Period length in seconds aggregation summation in time domain and aggregation maximum between Network Elements.

Source Field

PERLENSEC

Source Section

Vc4Ttp_NodeB_WMGeneral

pmVcBbe

Transmission Background Block Errors (BBE). Number of errored blocks not being part of a SES.

Data Source

NodeB_RXI

Source Field

pmVcBbe

Source Section

Vc4Ttp

pmVcEs

The total number of Errored Seconds.

Data Source

NodeB_RXI

Source Field

pmVcEs

Source Section

Vc4Ttp

pmVcSes

The total number of Severly Errored Seconds.

Data Source

NodeB_RXI

Source Field

pmVcSes

Source Section

Vc4Ttp

© Copyright IBM Corp. 2008, 2009. All Rights Reserved.

pmVcUas

Transmission Unavailable Seconds (UAS). The accumulated unavailable time in seconds during the interval. Unavailable time starts when 10 consecutive Severely Errored Seconds (SES) are detected (them being part of the unavailable time) and ends when 10 consecutive non SES are detected.

Data Source

NodeB_RXI

Source Field

pmVcUas

Source Section

Vc4Ttp

Vc4Ttp_RNC Primitive Calculations

The following is a list of primitive calculations for the Vc4Ttp_RNC entity.

GRAPHmultiLineSeparator

Special Control Field for Multi-Line Graphs

Calculation

```
""
```

NUMDAYS

of days in Report

Calculation

```
DAYSINREPORT()
```

NUMHOURS

of hours in Summation Data

Calculation

Vc4Ttp_RNC Peg Counts

The following is a list of peg counts for the Vc4Ttp_RNC entity.

PERLENSEC

Period length in seconds

Source Field

PERLENSEC

Source Section

Vc4Ttp_RNC_WMGeneral

PERLENSEC_K

Period length in seconds aggregation summation in time domain and aggregation maximum between Network Elements.

Source Field

PERLENSEC

Source Section

Vc4Ttp_RNC_WMGeneral

pmVcBbe

Transmission Background Block Errors (BBE). Number of errored blocks not being part of a SES.

Data Source

RNC_RXI

Source Field

pmVcBbe

Source Section

Vc4Ttp

pmVcEs

The total number of Errored Seconds.

Data Source

RNC_RXI

© Copyright IBM Corp. 2008, 2009. All Rights Reserved.

Source Field

pmVcEs

Source Section

Vc4Ttp

pmVcSes

The total number of Severly Errored Seconds.

Data Source

RNC_RXI

Source Field

pmVcSes

Source Section

Vc4Ttp

pmVcUas

Transmission Unavailable Seconds (UAS). The accumulated unavailable time in seconds during the interval. Unavailable time starts when 10 consecutive Severely Errored Seconds (SES) are detected (them being part of the unavailable time) and ends when 10 consecutive non SES are detected.

Data Source

RNC_RXI

Source Field

pmVcUas

Source Section

Vc4Ttp

RNC_RELEASE

Release

Data Source

RNC_RXI

Source Field

RNC_RELEASE

Source Section

Vc4Ttp_RNC

VclTp_NodeB Primitive Calculations

The following is a list of primitive calculations for the VclTp_NodeB entity.

Avr_CellRate_Recieved_VclTp_NodeB

Average Received CellRate in the measurement period.

Calculation

```
pmReceivedAtmCells / PERLENSEC
```

Avr_CellRate_Transmitted_VclTp_NodeB

Average Transmitted CellRate in the measurement period.

Calculation

```
pmTransmittedAtmCells / PERLENSEC
```

GRAPHmultiLineSeparator

Special Control Field for Multi-Line Graphs

Calculation

```
""
```

NUMDAYS

of days in Report

Calculation

```
DAYSINREPORT()
```

NUMHOURS

of hours in Summation Data

Calculation

© Copyright IBM Corp. 2008, 2009. All Rights Reserved.

VclTp_NodeB Peg Counts

The following is a list of peg counts for the VclTp_NodeB entity.

NodeB_RELEASE

Release

Data Source

NodeB_RNC_RXI

Source Section

VclTp_NodeB

PERLENSEC

Period Length

Data Source

NodeB_RNC_RXI

Source Field

perlensec

Source Section

VclTp_NodeB_WMGeneral

PERLENSEC_K

Period length in seconds aggregation summation in time domain and aggregation maximum between Network Elements.

Data Source

NodeB_RNC_RXI

Source Field

perlensec

Source Section

VclTp_NodeB_WMGeneral

pmBwUtilizationRx_00

The counter shows the utilization of the virtual connection in the receiving direction represented by a histogram, consisting of a list of 21 numbers. The first number is Peak Cell Rate (PCR) and the next 20 numbers are different load ranges (range counters) for the VclTp MO. The load is sampled every 10s and depending on the sampled value, the corresponding range counter is increased.

Data Source

NodeB_RXI

Source Field

pmBwUtilizationRx

Source Section

VclTp

pmBwUtilizationRx_01

The counter shows the utilization of the virtual connection in the receiving direction represented by a histogram, consisting of a list of 21 numbers. The first number is Peak Cell Rate (PCR) and the next 20 numbers are different load ranges (range counters) for the VclTp MO. The load is sampled every 10s and depending on the sampled value, the corresponding range counter is increased.

Data Source

NodeB_RXI

Source Field

pmBwUtilizationRx

Source Section

VclTp

pmBwUtilizationRx_02

The counter shows the utilization of the virtual connection in the receiving direction represented by a histogram, consisting of a list of 21 numbers. The first number is Peak Cell Rate (PCR) and the next 20 numbers are different load ranges (range counters) for the VclTp MO. The load is sampled every 10s and depending on the sampled value, the corresponding range counter is increased.

© Copyright IBM Corp. 2008, 2009. All Rights Reserved.

Data Source

NodeB_RXI

Source Field

pmBwUtilizationRx

Source Section

VclTp

pmBwUtilizationRx_03

The counter shows the utilization of the virtual connection in the receiving direction represented by a histogram, consisting of a list of 21 numbers. The first number is Peak Cell Rate (PCR) and the next 20 numbers are different load ranges (range counters) for the VclTp MO. The load is sampled every 10s and depending on the sampled value, the corresponding range counter is increased.

Data Source

NodeB_RXI

Source Field

pmBwUtilizationRx

Source Section

VclTp

pmBwUtilizationRx_04

The counter shows the utilization of the virtual connection in the receiving direction represented by a histogram, consisting of a list of 21 numbers. The first number is Peak Cell Rate (PCR) and the next 20 numbers are different load ranges (range counters) for the VclTp MO. The load is sampled every 10s and depending on the sampled value, the corresponding range counter is increased.

Data Source

NodeB_RXI

Source Field

pmBwUtilizationRx

Source Section

VclTp

pmBwUtilizationRx_05

The counter shows the utilization of the virtual connection in the receiving direction represented by a histogram, consisting of a list of 21 numbers. The first number is Peak Cell Rate (PCR) and the next 20 numbers are different load ranges (range counters) for the VclTp MO. The load is sampled every 10s and depending on the sampled value, the corresponding range counter is increased.

Data Source

NodeB_RXI

Source Field

pmBwUtilizationRx

Source Section

VclTp

pmBwUtilizationRx_06

The counter shows the utilization of the virtual connection in the receiving direction represented by a histogram, consisting of a list of 21 numbers. The first number is Peak Cell Rate (PCR) and the next 20 numbers are different load ranges (range counters) for the VclTp MO. The load is sampled every 10s and depending on the sampled value, the corresponding range counter is increased.

Data Source

NodeB_RXI

Source Field

pmBwUtilizationRx

Source Section

VclTp

pmBwUtilizationRx_07

The counter shows the utilization of the virtual connection in the receiving direction represented by a histogram, consisting of a list of 21 numbers. The first number is Peak Cell Rate (PCR) and the next 20 numbers are different load ranges (range counters) for the VclTp MO. The load is sampled every 10s and depending on the sampled value, the corresponding range counter is increased.

© Copyright IBM Corp. 2008, 2009. All Rights Reserved.

Data Source

NodeB_RXI

Source Field

pmBwUtilizationRx

Source Section

VclTp

pmBwUtilizationRx_08

The counter shows the utilization of the virtual connection in the receiving direction represented by a histogram, consisting of a list of 21 numbers. The first number is Peak Cell Rate (PCR) and the next 20 numbers are different load ranges (range counters) for the VclTp MO. The load is sampled every 10s and depending on the sampled value, the corresponding range counter is increased.

Data Source

NodeB_RXI

Source Field

pmBwUtilizationRx

Source Section

VclTp

pmBwUtilizationRx_09

The counter shows the utilization of the virtual connection in the receiving direction represented by a histogram, consisting of a list of 21 numbers. The first number is Peak Cell Rate (PCR) and the next 20 numbers are different load ranges (range counters) for the VclTp MO. The load is sampled every 10s and depending on the sampled value, the corresponding range counter is increased.

Data Source

NodeB_RXI

Source Field

pmBwUtilizationRx

Source Section

VclTp

pmBwUtilizationRx_10

The counter shows the utilization of the virtual connection in the receiving direction represented by a histogram, consisting of a list of 21 numbers. The first number is Peak Cell Rate (PCR) and the next 20 numbers are different load ranges (range counters) for the VclTp MO. The load is sampled every 10s and depending on the sampled value, the corresponding range counter is increased.

Data Source

NodeB_RXI

Source Field

pmBwUtilizationRx

Source Section

VclTp

pmBwUtilizationRx_11

The counter shows the utilization of the virtual connection in the receiving direction represented by a histogram, consisting of a list of 21 numbers. The first number is Peak Cell Rate (PCR) and the next 20 numbers are different load ranges (range counters) for the VclTp MO. The load is sampled every 10s and depending on the sampled value, the corresponding range counter is increased.

Data Source

NodeB_RXI

Source Field

pmBwUtilizationRx

Source Section

VclTp

pmBwUtilizationRx_12

The counter shows the utilization of the virtual connection in the receiving direction represented by a histogram, consisting of a list of 21 numbers. The first number is Peak Cell Rate (PCR) and the next 20 numbers are different load ranges (range counters) for the VclTp MO. The load is sampled every 10s and depending on the sampled value, the corresponding range counter is increased.

© Copyright IBM Corp. 2008, 2009. All Rights Reserved.

Data Source

NodeB_RXI

Source Field

pmBwUtilizationRx

Source Section

VclTp

pmBwUtilizationRx_13

The counter shows the utilization of the virtual connection in the receiving direction represented by a histogram, consisting of a list of 21 numbers. The first number is Peak Cell Rate (PCR) and the next 20 numbers are different load ranges (range counters) for the VclTp MO. The load is sampled every 10s and depending on the sampled value, the corresponding range counter is increased.

Data Source

NodeB_RXI

Source Field

pmBwUtilizationRx

Source Section

VclTp

pmBwUtilizationRx_14

The counter shows the utilization of the virtual connection in the receiving direction represented by a histogram, consisting of a list of 21 numbers. The first number is Peak Cell Rate (PCR) and the next 20 numbers are different load ranges (range counters) for the VclTp MO. The load is sampled every 10s and depending on the sampled value, the corresponding range counter is increased.

Data Source

NodeB_RXI

Source Field

pmBwUtilizationRx

Source Section

VclTp

pmBwUtilizationRx_15

The counter shows the utilization of the virtual connection in the receiving direction represented by a histogram, consisting of a list of 21 numbers. The first number is Peak Cell Rate (PCR) and the next 20 numbers are different load ranges (range counters) for the VclTp MO. The load is sampled every 10s and depending on the sampled value, the corresponding range counter is increased.

Data Source

NodeB_RXI

Source Field

pmBwUtilizationRx

Source Section

VclTp

pmBwUtilizationRx_16

The counter shows the utilization of the virtual connection in the receiving direction represented by a histogram, consisting of a list of 21 numbers. The first number is Peak Cell Rate (PCR) and the next 20 numbers are different load ranges (range counters) for the VclTp MO. The load is sampled every 10s and depending on the sampled value, the corresponding range counter is increased.

Data Source

NodeB_RXI

Source Field

pmBwUtilizationRx

Source Section

VclTp

pmBwUtilizationRx_17

The counter shows the utilization of the virtual connection in the receiving direction represented by a histogram, consisting of a list of 21 numbers. The first number is Peak Cell Rate (PCR) and the next 20 numbers are different load ranges (range counters) for the VclTp MO. The load is sampled every 10s and depending on the sampled value, the corresponding range counter is increased.

© Copyright IBM Corp. 2008, 2009. All Rights Reserved.

Data Source

NodeB_RXI

Source Field

pmBwUtilizationRx

Source Section

VclTp

pmBwUtilizationRx_18

The counter shows the utilization of the virtual connection in the receiving direction represented by a histogram, consisting of a list of 21 numbers. The first number is Peak Cell Rate (PCR) and the next 20 numbers are different load ranges (range counters) for the VclTp MO. The load is sampled every 10s and depending on the sampled value, the corresponding range counter is increased.

Data Source

NodeB_RXI

Source Field

pmBwUtilizationRx

Source Section

VclTp

pmBwUtilizationRx_19

The counter shows the utilization of the virtual connection in the receiving direction represented by a histogram, consisting of a list of 21 numbers. The first number is Peak Cell Rate (PCR) and the next 20 numbers are different load ranges (range counters) for the VclTp MO. The load is sampled every 10s and depending on the sampled value, the corresponding range counter is increased.

Data Source

NodeB_RXI

Source Field

pmBwUtilizationRx

Source Section

VclTp

pmBwUtilizationRx_20

The counter shows the utilization of the virtual connection in the receiving direction represented by a histogram, consisting of a list of 21 numbers. The first number is Peak Cell Rate (PCR) and the next 20 numbers are different load ranges (range counters) for the VclTp MO. The load is sampled every 10s and depending on the sampled value, the corresponding range counter is increased.

Data Source

NodeB_RXI

Source Field

pmBwUtilizationRx

Source Section

VclTp

pmBwUtilizationTx_00

The counter shows the utilization of the virtual connection in the transmitting direction represented by a histogram, consisting of a list of 21 numbers, indexed from zero. The first number is Peak Cell Rate (PCR) and the next 20 numbers are different load ranges (range counters) for the VclTp MO. The load is sampled every 10s and depending on the sampled value, the corresponding range counter is increased.

Data Source

NodeB_RXI

Source Field

pmBwUtilizationTx

Source Section

VclTp

pmBwUtilizationTx_01

The counter shows the utilization of the virtual connection in the transmitting direction represented by a histogram, consisting of a list of 21 numbers, indexed from zero. The first number is Peak Cell Rate (PCR) and the next 20 numbers are different load ranges (range counters) for the VclTp MO. The load is sampled every 10s and depending on the sampled value, the corresponding range counter is increased.

© Copyright IBM Corp. 2008, 2009. All Rights Reserved.

Data Source

NodeB_RXI

Source Field

pmBwUtilizationTx

Source Section

VclTp

pmBwUtilizationTx_02

The counter shows the utilization of the virtual connection in the transmitting direction represented by a histogram, consisting of a list of 21 numbers, indexed from zero. The first number is Peak Cell Rate (PCR) and the next 20 numbers are different load ranges (range counters) for the VclTp MO. The load is sampled every 10s and depending on the sampled value, the corresponding range counter is increased.

Data Source

NodeB_RXI

Source Field

pmBwUtilizationTx

Source Section

VclTp

pmBwUtilizationTx_03

The counter shows the utilization of the virtual connection in the transmitting direction represented by a histogram, consisting of a list of 21 numbers, indexed from zero. The first number is Peak Cell Rate (PCR) and the next 20 numbers are different load ranges (range counters) for the VclTp MO. The load is sampled every 10s and depending on the sampled value, the corresponding range counter is increased.

Data Source

NodeB_RXI

Source Field

pmBwUtilizationTx

Source Section

VclTp

pmBwUtilizationTx_04

The counter shows the utilization of the virtual connection in the transmitting direction represented by a histogram, consisting of a list of 21 numbers, indexed from zero. The first number is Peak Cell Rate (PCR) and the next 20 numbers are different load ranges (range counters) for the VclTp MO. The load is sampled every 10s and depending on the sampled value, the corresponding range counter is increased.

Data Source

NodeB_RXI

Source Field

pmBwUtilizationTx

Source Section

VclTp

pmBwUtilizationTx_05

The counter shows the utilization of the virtual connection in the transmitting direction represented by a histogram, consisting of a list of 21 numbers, indexed from zero. The first number is Peak Cell Rate (PCR) and the next 20 numbers are different load ranges (range counters) for the VclTp MO. The load is sampled every 10s and depending on the sampled value, the corresponding range counter is increased.

Data Source

NodeB_RXI

Source Field

pmBwUtilizationTx

Source Section

VclTp

pmBwUtilizationTx_06

The counter shows the utilization of the virtual connection in the transmitting direction represented by a histogram, consisting of a list of 21 numbers, indexed from zero. The first number is Peak Cell Rate (PCR) and the next 20 numbers are different load ranges (range counters) for the VclTp MO. The load is sampled every 10s and depending on the sampled value, the corresponding range counter is increased.

© Copyright IBM Corp. 2008, 2009. All Rights Reserved.

Data Source

NodeB_RXI

Source Field

pmBwUtilizationTx

Source Section

VclTp

pmBwUtilizationTx_07

The counter shows the utilization of the virtual connection in the transmitting direction represented by a histogram, consisting of a list of 21 numbers, indexed from zero. The first number is Peak Cell Rate (PCR) and the next 20 numbers are different load ranges (range counters) for the VclTp MO. The load is sampled every 10s and depending on the sampled value, the corresponding range counter is increased.

Data Source

NodeB_RXI

Source Field

pmBwUtilizationTx

Source Section

VclTp

pmBwUtilizationTx_08

The counter shows the utilization of the virtual connection in the transmitting direction represented by a histogram, consisting of a list of 21 numbers, indexed from zero. The first number is Peak Cell Rate (PCR) and the next 20 numbers are different load ranges (range counters) for the VclTp MO. The load is sampled every 10s and depending on the sampled value, the corresponding range counter is increased.

Data Source

NodeB_RXI

Source Field

pmBwUtilizationTx

Source Section

VclTp

pmBwUtilizationTx_09

The counter shows the utilization of the virtual connection in the transmitting direction represented by a histogram, consisting of a list of 21 numbers, indexed from zero. The first number is Peak Cell Rate (PCR) and the next 20 numbers are different load ranges (range counters) for the VclTp MO. The load is sampled every 10s and depending on the sampled value, the corresponding range counter is increased.

Data Source

NodeB_RXI

Source Field

pmBwUtilizationTx

Source Section

VclTp

pmBwUtilizationTx_10

The counter shows the utilization of the virtual connection in the transmitting direction represented by a histogram, consisting of a list of 21 numbers, indexed from zero. The first number is Peak Cell Rate (PCR) and the next 20 numbers are different load ranges (range counters) for the VclTp MO. The load is sampled every 10s and depending on the sampled value, the corresponding range counter is increased.

Data Source

NodeB_RXI

Source Field

pmBwUtilizationTx

Source Section

VclTp

pmBwUtilizationTx_11

The counter shows the utilization of the virtual connection in the transmitting direction represented by a histogram, consisting of a list of 21 numbers, indexed from zero. The first number is Peak Cell Rate (PCR) and the next 20 numbers are different load ranges (range counters) for the VclTp MO. The load is sampled every 10s and depending on the sampled value, the corresponding range counter is increased.

© Copyright IBM Corp. 2008, 2009. All Rights Reserved.

Data Source

NodeB_RXI

Source Field

pmBwUtilizationTx

Source Section

VclTp

pmBwUtilizationTx_12

The counter shows the utilization of the virtual connection in the transmitting direction represented by a histogram, consisting of a list of 21 numbers, indexed from zero. The first number is Peak Cell Rate (PCR) and the next 20 numbers are different load ranges (range counters) for the VclTp MO. The load is sampled every 10s and depending on the sampled value, the corresponding range counter is increased.

Data Source

NodeB_RXI

Source Field

pmBwUtilizationTx

Source Section

VclTp

pmBwUtilizationTx_13

The counter shows the utilization of the virtual connection in the transmitting direction represented by a histogram, consisting of a list of 21 numbers, indexed from zero. The first number is Peak Cell Rate (PCR) and the next 20 numbers are different load ranges (range counters) for the VclTp MO. The load is sampled every 10s and depending on the sampled value, the corresponding range counter is increased.

Data Source

NodeB_RXI

Source Field

pmBwUtilizationTx

Source Section

VclTp

pmBwUtilizationTx_14

The counter shows the utilization of the virtual connection in the transmitting direction represented by a histogram, consisting of a list of 21 numbers, indexed from zero. The first number is Peak Cell Rate (PCR) and the next 20 numbers are different load ranges (range counters) for the VclTp MO. The load is sampled every 10s and depending on the sampled value, the corresponding range counter is increased.

Data Source

NodeB_RXI

Source Field

pmBwUtilizationTx

Source Section

VclTp

pmBwUtilizationTx_15

The counter shows the utilization of the virtual connection in the transmitting direction represented by a histogram, consisting of a list of 21 numbers, indexed from zero. The first number is Peak Cell Rate (PCR) and the next 20 numbers are different load ranges (range counters) for the VclTp MO. The load is sampled every 10s and depending on the sampled value, the corresponding range counter is increased.

Data Source

NodeB_RXI

Source Field

pmBwUtilizationTx

Source Section

VclTp

pmBwUtilizationTx_16

The counter shows the utilization of the virtual connection in the transmitting direction represented by a histogram, consisting of a list of 21 numbers, indexed from zero. The first number is Peak Cell Rate (PCR) and the next 20 numbers are different load ranges (range counters) for the VclTp MO. The load is sampled every 10s and depending on the sampled value, the corresponding range counter is increased.

© Copyright IBM Corp. 2008, 2009. All Rights Reserved.

Data Source

NodeB_RXI

Source Field

pmBwUtilizationTx

Source Section

VclTp

pmBwUtilizationTx_17

The counter shows the utilization of the virtual connection in the transmitting direction represented by a histogram, consisting of a list of 21 numbers, indexed from zero. The first number is Peak Cell Rate (PCR) and the next 20 numbers are different load ranges (range counters) for the VclTp MO. The load is sampled every 10s and depending on the sampled value, the corresponding range counter is increased.

Data Source

NodeB_RXI

Source Field

pmBwUtilizationTx

Source Section

VclTp

pmBwUtilizationTx_18

The counter shows the utilization of the virtual connection in the transmitting direction represented by a histogram, consisting of a list of 21 numbers, indexed from zero. The first number is Peak Cell Rate (PCR) and the next 20 numbers are different load ranges (range counters) for the VclTp MO. The load is sampled every 10s and depending on the sampled value, the corresponding range counter is increased.

Data Source

NodeB_RXI

Source Field

pmBwUtilizationTx

Source Section

VclTp

pmBwUtilizationTx_19

The counter shows the utilization of the virtual connection in the transmitting direction represented by a histogram, consisting of a list of 21 numbers, indexed from zero. The first number is Peak Cell Rate (PCR) and the next 20 numbers are different load ranges (range counters) for the VclTp MO. The load is sampled every 10s and depending on the sampled value, the corresponding range counter is increased.

Data Source

NodeB_RXI

Source Field

pmBwUtilizationTx

Source Section

VclTp

pmBwUtilizationTx_20

The counter shows the utilization of the virtual connection in the transmitting direction represented by a histogram, consisting of a list of 21 numbers, indexed from zero. The first number is Peak Cell Rate (PCR) and the next 20 numbers are different load ranges (range counters) for the VclTp MO. The load is sampled every 10s and depending on the sampled value, the corresponding range counter is increased.

Data Source

NodeB_RXI

Source Field

pmBwUtilizationTx

Source Section

VclTp

pmReceivedAtmCells

Number of received ATM cells.

Data Source

NodeB_RNC_RXI

Source Field

pmReceivedAtmCells

© Copyright IBM Corp. 2008, 2009. All Rights Reserved.

Source Section

VclTp_NodeB

pmTransmittedAtmCells

Number of transmitted ATM cells.

Data Source

NodeB_RNC_RXI

Source Field

pmTransmittedAtmCells

Source Section

VclTp_NodeB

VclTp_RNC Primitive Calculations

The following is a list of primitive calculations for the VclTp_RNC entity.

Avr_CellRate_Recieved_VclTp_RNC

Average Received CellRate in the measurement period.

Calculation

```
pmReceivedAtmCells / PERLENSEC
```

Avr_CellRate_Transmitted_VclTp_RNC

Average Transmitted CellRate in the measurement period.

Calculation

```
pmTransmittedAtmCells / PERLENSEC
```

GRAPHmultiLineSeparator

Special Control Field for Multi-Line Graphs

Calculation

```
""
```

NUMDAYS

of days in Report

Calculation

```
DAYSINREPORT()
```

NUMHOURS

of hours in Summation Data

Calculation

VclTp_RNC Peg Counts

The following is a list of peg counts for the VclTp_RNC entity.

PERLENSEC

Period Length

Data Source

NodeB_RNC_RXI

Source Field

perlensec

Source Section

VclTp_RNC_WMGeneral

PERLENSEC_K

Period length in seconds aggregation summation in time domain and aggregation maximum between Network Elements.

Data Source

NodeB_RNC_RXI

Source Field

perlensec

Source Section

VclTp_RNC_WMGeneral

© Copyright IBM Corp. 2008, 2009. All Rights Reserved.

pmBwUtilizationRx_00

The counter shows the utilization of the virtual connection in the receiving direction represented by a histogram, consisting of a list of 21 numbers. The first number is Peak Cell Rate (PCR) and the next 20 numbers are different load ranges (range counters) for the VclTp MO. The load is sampled every 10s and depending on the sampled value, the corresponding range counter is increased.

Data Source

RNC_RXI

Source Field

pmBwUtilizationRx

Source Section

VclTp

pmBwUtilizationRx_01

The counter shows the utilization of the virtual connection in the receiving direction represented by a histogram, consisting of a list of 21 numbers. The first number is Peak Cell Rate (PCR) and the next 20 numbers are different load ranges (range counters) for the VclTp MO. The load is sampled every 10s and depending on the sampled value, the corresponding range counter is increased.

Data Source

RNC_RXI

Source Field

pmBwUtilizationRx

Source Section

VclTp

pmBwUtilizationRx_02

The counter shows the utilization of the virtual connection in the receiving direction represented by a histogram, consisting of a list of 21 numbers. The first number is Peak Cell Rate (PCR) and the next 20 numbers are different load ranges (range counters) for the VclTp MO. The load is sampled every 10s and depending on the sampled value, the corresponding range counter is increased.

Data Source

RNC_RXI

Source Field

pmBwUtilizationRx

Source Section

VclTp

pmBwUtilizationRx_03

The counter shows the utilization of the virtual connection in the receiving direction represented by a histogram, consisting of a list of 21 numbers. The first number is Peak Cell Rate (PCR) and the next 20 numbers are different load ranges (range counters) for the VclTp MO. The load is sampled every 10s and depending on the sampled value, the corresponding range counter is increased.

Data Source

RNC_RXI

Source Field

pmBwUtilizationRx

Source Section

VclTp

pmBwUtilizationRx_04

The counter shows the utilization of the virtual connection in the receiving direction represented by a histogram, consisting of a list of 21 numbers. The first number is Peak Cell Rate (PCR) and the next 20 numbers are different load ranges (range counters) for the VclTp MO. The load is sampled every 10s and depending on the sampled value, the corresponding range counter is increased.

Data Source

RNC_RXI

Source Field

pmBwUtilizationRx

Source Section

VclTp

© Copyright IBM Corp. 2008, 2009. All Rights Reserved.

pmBwUtilizationRx_05

The counter shows the utilization of the virtual connection in the receiving direction represented by a histogram, consisting of a list of 21 numbers. The first number is Peak Cell Rate (PCR) and the next 20 numbers are different load ranges (range counters) for the VclTp MO. The load is sampled every 10s and depending on the sampled value, the corresponding range counter is increased.

Data Source

RNC_RXI

Source Field

pmBwUtilizationRx

Source Section

VclTp

pmBwUtilizationRx_06

The counter shows the utilization of the virtual connection in the receiving direction represented by a histogram, consisting of a list of 21 numbers. The first number is Peak Cell Rate (PCR) and the next 20 numbers are different load ranges (range counters) for the VclTp MO. The load is sampled every 10s and depending on the sampled value, the corresponding range counter is increased.

Data Source

RNC_RXI

Source Field

pmBwUtilizationRx

Source Section

VclTp

pmBwUtilizationRx_07

The counter shows the utilization of the virtual connection in the receiving direction represented by a histogram, consisting of a list of 21 numbers. The first number is Peak Cell Rate (PCR) and the next 20 numbers are different load ranges (range counters) for the VclTp MO. The load is sampled every 10s and depending on the sampled value, the corresponding range counter is increased.

Data Source

RNC_RXI

Source Field

pmBwUtilizationRx

Source Section

VclTp

pmBwUtilizationRx_08

The counter shows the utilization of the virtual connection in the receiving direction represented by a histogram, consisting of a list of 21 numbers. The first number is Peak Cell Rate (PCR) and the next 20 numbers are different load ranges (range counters) for the VclTp MO. The load is sampled every 10s and depending on the sampled value, the corresponding range counter is increased.

Data Source

RNC_RXI

Source Field

pmBwUtilizationRx

Source Section

VclTp

pmBwUtilizationRx_09

The counter shows the utilization of the virtual connection in the receiving direction represented by a histogram, consisting of a list of 21 numbers. The first number is Peak Cell Rate (PCR) and the next 20 numbers are different load ranges (range counters) for the VclTp MO. The load is sampled every 10s and depending on the sampled value, the corresponding range counter is increased.

Data Source

RNC_RXI

Source Field

pmBwUtilizationRx

Source Section

VclTp

© Copyright IBM Corp. 2008, 2009. All Rights Reserved.

pmBwUtilizationRx_10

The counter shows the utilization of the virtual connection in the receiving direction represented by a histogram, consisting of a list of 21 numbers. The first number is Peak Cell Rate (PCR) and the next 20 numbers are different load ranges (range counters) for the VclTp MO. The load is sampled every 10s and depending on the sampled value, the corresponding range counter is increased.

Data Source

RNC_RXI

Source Field

pmBwUtilizationRx

Source Section

VclTp

pmBwUtilizationRx_11

The counter shows the utilization of the virtual connection in the receiving direction represented by a histogram, consisting of a list of 21 numbers. The first number is Peak Cell Rate (PCR) and the next 20 numbers are different load ranges (range counters) for the VclTp MO. The load is sampled every 10s and depending on the sampled value, the corresponding range counter is increased.

Data Source

RNC_RXI

Source Field

pmBwUtilizationRx

Source Section

VclTp

pmBwUtilizationRx_12

The counter shows the utilization of the virtual connection in the receiving direction represented by a histogram, consisting of a list of 21 numbers. The first number is Peak Cell Rate (PCR) and the next 20 numbers are different load ranges (range counters) for the VclTp MO. The load is sampled every 10s and depending on the sampled value, the corresponding range counter is increased.

Data Source

RNC_RXI

Source Field

pmBwUtilizationRx

Source Section

VclTp

pmBwUtilizationRx_13

The counter shows the utilization of the virtual connection in the receiving direction represented by a histogram, consisting of a list of 21 numbers. The first number is Peak Cell Rate (PCR) and the next 20 numbers are different load ranges (range counters) for the VclTp MO. The load is sampled every 10s and depending on the sampled value, the corresponding range counter is increased.

Data Source

RNC_RXI

Source Field

pmBwUtilizationRx

Source Section

VclTp

pmBwUtilizationRx_14

The counter shows the utilization of the virtual connection in the receiving direction represented by a histogram, consisting of a list of 21 numbers. The first number is Peak Cell Rate (PCR) and the next 20 numbers are different load ranges (range counters) for the VclTp MO. The load is sampled every 10s and depending on the sampled value, the corresponding range counter is increased.

Data Source

RNC_RXI

Source Field

pmBwUtilizationRx

Source Section

VclTp

© Copyright IBM Corp. 2008, 2009. All Rights Reserved.

pmBwUtilizationRx_15

The counter shows the utilization of the virtual connection in the receiving direction represented by a histogram, consisting of a list of 21 numbers. The first number is Peak Cell Rate (PCR) and the next 20 numbers are different load ranges (range counters) for the VclTp MO. The load is sampled every 10s and depending on the sampled value, the corresponding range counter is increased.

Data Source

RNC_RXI

Source Field

pmBwUtilizationRx

Source Section

VclTp

pmBwUtilizationRx_16

The counter shows the utilization of the virtual connection in the receiving direction represented by a histogram, consisting of a list of 21 numbers. The first number is Peak Cell Rate (PCR) and the next 20 numbers are different load ranges (range counters) for the VclTp MO. The load is sampled every 10s and depending on the sampled value, the corresponding range counter is increased.

Data Source

RNC_RXI

Source Field

pmBwUtilizationRx

Source Section

VclTp

pmBwUtilizationRx_17

The counter shows the utilization of the virtual connection in the receiving direction represented by a histogram, consisting of a list of 21 numbers. The first number is Peak Cell Rate (PCR) and the next 20 numbers are different load ranges (range counters) for the VclTp MO. The load is sampled every 10s and depending on the sampled value, the corresponding range counter is increased.

Data Source

RNC_RXI

Source Field

pmBwUtilizationRx

Source Section

VclTp

pmBwUtilizationRx_18

The counter shows the utilization of the virtual connection in the receiving direction represented by a histogram, consisting of a list of 21 numbers. The first number is Peak Cell Rate (PCR) and the next 20 numbers are different load ranges (range counters) for the VclTp MO. The load is sampled every 10s and depending on the sampled value, the corresponding range counter is increased.

Data Source

RNC_RXI

Source Field

pmBwUtilizationRx

Source Section

VclTp

pmBwUtilizationRx_19

The counter shows the utilization of the virtual connection in the receiving direction represented by a histogram, consisting of a list of 21 numbers. The first number is Peak Cell Rate (PCR) and the next 20 numbers are different load ranges (range counters) for the VclTp MO. The load is sampled every 10s and depending on the sampled value, the corresponding range counter is increased.

Data Source

RNC_RXI

Source Field

pmBwUtilizationRx

Source Section

VclTp

© Copyright IBM Corp. 2008, 2009. All Rights Reserved.

pmBwUtilizationRx_20

The counter shows the utilization of the virtual connection in the receiving direction represented by a histogram, consisting of a list of 21 numbers. The first number is Peak Cell Rate (PCR) and the next 20 numbers are different load ranges (range counters) for the VclTp MO. The load is sampled every 10s and depending on the sampled value, the corresponding range counter is increased.

Data Source

RNC_RXI

Source Field

pmBwUtilizationRx

Source Section

VclTp

pmBwUtilizationTx_00

The counter shows the utilization of the virtual connection in the transmitting direction represented by a histogram, consisting of a list of 21 numbers, indexed from zero. The first number is Peak Cell Rate (PCR) and the next 20 numbers are different load ranges (range counters) for the VclTp MO. The load is sampled every 10s and depending on the sampled value, the corresponding range counter is increased.

Data Source

RNC_RXI

Source Field

pmBwUtilizationTx

Source Section

VclTp

pmBwUtilizationTx_01

The counter shows the utilization of the virtual connection in the transmitting direction represented by a histogram, consisting of a list of 21 numbers, indexed from zero. The first number is Peak Cell Rate (PCR) and the next 20 numbers are different load ranges (range counters) for the VclTp MO. The load is sampled every 10s and depending on the sampled value, the corresponding range counter is increased.

Data Source

RNC_RXI

Source Field

pmBwUtilizationTx

Source Section

VclTp

pmBwUtilizationTx_02

The counter shows the utilization of the virtual connection in the transmitting direction represented by a histogram, consisting of a list of 21 numbers, indexed from zero. The first number is Peak Cell Rate (PCR) and the next 20 numbers are different load ranges (range counters) for the VclTp MO. The load is sampled every 10s and depending on the sampled value, the corresponding range counter is increased.

Data Source

RNC_RXI

Source Field

pmBwUtilizationTx

Source Section

VclTp

pmBwUtilizationTx_03

The counter shows the utilization of the virtual connection in the transmitting direction represented by a histogram, consisting of a list of 21 numbers, indexed from zero. The first number is Peak Cell Rate (PCR) and the next 20 numbers are different load ranges (range counters) for the VclTp MO. The load is sampled every 10s and depending on the sampled value, the corresponding range counter is increased.

Data Source

RNC_RXI

Source Field

pmBwUtilizationTx

Source Section

VclTp

© Copyright IBM Corp. 2008, 2009. All Rights Reserved.

pmBwUtilizationTx_04

The counter shows the utilization of the virtual connection in the transmitting direction represented by a histogram, consisting of a list of 21 numbers, indexed from zero. The first number is Peak Cell Rate (PCR) and the next 20 numbers are different load ranges (range counters) for the VclTp MO. The load is sampled every 10s and depending on the sampled value, the corresponding range counter is increased.

Data Source

RNC_RXI

Source Field

pmBwUtilizationTx

Source Section

VclTp

pmBwUtilizationTx_05

The counter shows the utilization of the virtual connection in the transmitting direction represented by a histogram, consisting of a list of 21 numbers, indexed from zero. The first number is Peak Cell Rate (PCR) and the next 20 numbers are different load ranges (range counters) for the VclTp MO. The load is sampled every 10s and depending on the sampled value, the corresponding range counter is increased.

Data Source

RNC_RXI

Source Field

pmBwUtilizationTx

Source Section

VclTp

pmBwUtilizationTx_06

The counter shows the utilization of the virtual connection in the transmitting direction represented by a histogram, consisting of a list of 21 numbers, indexed from zero. The first number is Peak Cell Rate (PCR) and the next 20 numbers are different load ranges (range counters) for the VclTp MO. The load is sampled every 10s and depending on the sampled value, the corresponding range counter is increased.

Data Source

RNC_RXI

Source Field

pmBwUtilizationTx

Source Section

VclTp

pmBwUtilizationTx_07

The counter shows the utilization of the virtual connection in the transmitting direction represented by a histogram, consisting of a list of 21 numbers, indexed from zero. The first number is Peak Cell Rate (PCR) and the next 20 numbers are different load ranges (range counters) for the VclTp MO. The load is sampled every 10s and depending on the sampled value, the corresponding range counter is increased.

Data Source

RNC_RXI

Source Field

pmBwUtilizationTx

Source Section

VclTp

pmBwUtilizationTx_08

The counter shows the utilization of the virtual connection in the transmitting direction represented by a histogram, consisting of a list of 21 numbers, indexed from zero. The first number is Peak Cell Rate (PCR) and the next 20 numbers are different load ranges (range counters) for the VclTp MO. The load is sampled every 10s and depending on the sampled value, the corresponding range counter is increased.

Data Source

RNC_RXI

Source Field

pmBwUtilizationTx

Source Section

VclTp

© Copyright IBM Corp. 2008, 2009. All Rights Reserved.

pmBwUtilizationTx_09

The counter shows the utilization of the virtual connection in the transmitting direction represented by a histogram, consisting of a list of 21 numbers, indexed from zero. The first number is Peak Cell Rate (PCR) and the next 20 numbers are different load ranges (range counters) for the VclTp MO. The load is sampled every 10s and depending on the sampled value, the corresponding range counter is increased.

Data Source

RNC_RXI

Source Field

pmBwUtilizationTx

Source Section

VclTp

pmBwUtilizationTx_10

The counter shows the utilization of the virtual connection in the transmitting direction represented by a histogram, consisting of a list of 21 numbers, indexed from zero. The first number is Peak Cell Rate (PCR) and the next 20 numbers are different load ranges (range counters) for the VclTp MO. The load is sampled every 10s and depending on the sampled value, the corresponding range counter is increased.

Data Source

RNC_RXI

Source Field

pmBwUtilizationTx

Source Section

VclTp

pmBwUtilizationTx_11

The counter shows the utilization of the virtual connection in the transmitting direction represented by a histogram, consisting of a list of 21 numbers, indexed from zero. The first number is Peak Cell Rate (PCR) and the next 20 numbers are different load ranges (range counters) for the VclTp MO. The load is sampled every 10s and depending on the sampled value, the corresponding range counter is increased.

Data Source

RNC_RXI

Source Field

pmBwUtilizationTx

Source Section

VclTp

pmBwUtilizationTx_12

The counter shows the utilization of the virtual connection in the transmitting direction represented by a histogram, consisting of a list of 21 numbers, indexed from zero. The first number is Peak Cell Rate (PCR) and the next 20 numbers are different load ranges (range counters) for the VclTp MO. The load is sampled every 10s and depending on the sampled value, the corresponding range counter is increased.

Data Source

RNC_RXI

Source Field

pmBwUtilizationTx

Source Section

VclTp

pmBwUtilizationTx_13

The counter shows the utilization of the virtual connection in the transmitting direction represented by a histogram, consisting of a list of 21 numbers, indexed from zero. The first number is Peak Cell Rate (PCR) and the next 20 numbers are different load ranges (range counters) for the VclTp MO. The load is sampled every 10s and depending on the sampled value, the corresponding range counter is increased.

Data Source

RNC_RXI

Source Field

pmBwUtilizationTx

Source Section

VclTp

© Copyright IBM Corp. 2008, 2009. All Rights Reserved.

pmBwUtilizationTx_14

The counter shows the utilization of the virtual connection in the transmitting direction represented by a histogram, consisting of a list of 21 numbers, indexed from zero. The first number is Peak Cell Rate (PCR) and the next 20 numbers are different load ranges (range counters) for the VclTp MO. The load is sampled every 10s and depending on the sampled value, the corresponding range counter is increased.

Data Source

RNC_RXI

Source Field

pmBwUtilizationTx

Source Section

VclTp

pmBwUtilizationTx_15

The counter shows the utilization of the virtual connection in the transmitting direction represented by a histogram, consisting of a list of 21 numbers, indexed from zero. The first number is Peak Cell Rate (PCR) and the next 20 numbers are different load ranges (range counters) for the VclTp MO. The load is sampled every 10s and depending on the sampled value, the corresponding range counter is increased.

Data Source

RNC_RXI

Source Field

pmBwUtilizationTx

Source Section

VclTp

pmBwUtilizationTx_16

The counter shows the utilization of the virtual connection in the transmitting direction represented by a histogram, consisting of a list of 21 numbers, indexed from zero. The first number is Peak Cell Rate (PCR) and the next 20 numbers are different load ranges (range counters) for the VclTp MO. The load is sampled every 10s and depending on the sampled value, the corresponding range counter is increased.

Data Source

RNC_RXI

Source Field

pmBwUtilizationTx

Source Section

VclTp

pmBwUtilizationTx_17

The counter shows the utilization of the virtual connection in the transmitting direction represented by a histogram, consisting of a list of 21 numbers, indexed from zero. The first number is Peak Cell Rate (PCR) and the next 20 numbers are different load ranges (range counters) for the VclTp MO. The load is sampled every 10s and depending on the sampled value, the corresponding range counter is increased.

Data Source

RNC_RXI

Source Field

pmBwUtilizationTx

Source Section

VclTp

pmBwUtilizationTx_18

The counter shows the utilization of the virtual connection in the transmitting direction represented by a histogram, consisting of a list of 21 numbers, indexed from zero. The first number is Peak Cell Rate (PCR) and the next 20 numbers are different load ranges (range counters) for the VclTp MO. The load is sampled every 10s and depending on the sampled value, the corresponding range counter is increased.

Data Source

RNC_RXI

Source Field

pmBwUtilizationTx

Source Section

VclTp

© Copyright IBM Corp. 2008, 2009. All Rights Reserved.

pmBwUtilizationTx_19

The counter shows the utilization of the virtual connection in the transmitting direction represented by a histogram, consisting of a list of 21 numbers, indexed from zero. The first number is Peak Cell Rate (PCR) and the next 20 numbers are different load ranges (range counters) for the VclTp MO. The load is sampled every 10s and depending on the sampled value, the corresponding range counter is increased.

Data Source

RNC_RXI

Source Field

pmBwUtilizationTx

Source Section

VclTp

pmBwUtilizationTx_20

The counter shows the utilization of the virtual connection in the transmitting direction represented by a histogram, consisting of a list of 21 numbers, indexed from zero. The first number is Peak Cell Rate (PCR) and the next 20 numbers are different load ranges (range counters) for the VclTp MO. The load is sampled every 10s and depending on the sampled value, the corresponding range counter is increased.

Data Source

RNC_RXI

Source Field

pmBwUtilizationTx

Source Section

VclTp

pmReceivedAtmCells

Number of received ATM cells.

Data Source

NodeB_RNC_RXI

Source Field

pmReceivedAtmCells

Source Section

VclTp_RNC

pmTransmittedAtmCells

Number of transmitted ATM cells.

Data Source

NodeB_RNC_RXI

Source Field

pmTransmittedAtmCells

Source Section

VclTp_RNC

RNC_RELEASE

Release

Data Source

NodeB_RNC_RXI

Source Section

VclTp_RNC

VpcTp_NodeB Primitive Calculations

The following is a list of primitive calculations for the VpcTp_NodeB entity.

GRAPHmultiLineSeparator

Special Control Field for Multi-Line Graphs

Calculation

```
""
```

NUMDAYS

of days in Report

Calculation

```
DAYSINREPORT()
```

© Copyright IBM Corp. 2008, 2009. All Rights Reserved.

NUMHOURS

of hours in Summation Data

Calculation

VpcTp_NodeB Peg Counts

The following is a list of peg counts for the VpcTp_NodeB entity.

NodeB_RELEASE

Release

Data Source

NodeB_RNC_RXI

Source Section

VpcTp_NodeB

PERLENSEC

Period Length

Data Source

NodeB_RNC_RXI

Source Field

perlensec

Source Section

VpcTp_NodeB_WMGeneral

PERLENSEC_K

Period length in seconds aggregation summation in time domain and aggregation maximum between Network Elements.

Data Source

NodeB_RNC_RXI

Source Field

perlensec

Source Section

VpcTp_NodeB_WMGeneral

pmBwErrBlocks

Number of backward errored blocks.

Data Source

NodeB_RNC_RXI

Source Field

pmBwErrBlocks

Source Section

VpcTp_NodeB

pmBwLostCells

Number of backward lost cells.

Data Source

NodeB_RNC_RXI

Source Field

pmBwLostCells

Source Section

VpcTp_NodeB

pmBwMissinsCells

Number of backward misinserted cells.

Data Source

NodeB_RNC_RXI

Source Field

pmBwMissinsCells

© Copyright IBM Corp. 2008, 2009. All Rights Reserved.

Source Section

VpcTp_NodeB

pmFwErrBlocks

Number of forwarded errored blocks.

Data Source

NodeB_RNC_RXI

Source Field

pmFwErrBlocks

Source Section

VpcTp_NodeB

pmFwLostCells

Number of forwarded lost cells.

Data Source

NodeB_RNC_RXI

Source Field

pmFwLostCells

Source Section

VpcTp_NodeB

pmFwMissinsCells

Number of forwarded misinserted cells.

Data Source

NodeB_RNC_RXI

Source Field

pmFwMissinsCells

Source Section

VpcTp_NodeB

pmLostBrCells

Number of lost bit rate cells.

Data Source

NodeB_RNC_RXI

Source Field

pmLostBrCells

Source Section

VpcTp_NodeB

pmLostFpmCells

Number of lost Forward Performance Monitoring (FPM) cells.

Data Source

NodeB_RNC_RXI

Source Field

pmLostFpmCells

Source Section

VpcTp_NodeB

VpcTp_RNC Primitive Calculations

The following is a list of primitive calculations for the VpcTp_RNC entity.

GRAPHmultiLineSeparator

Special Control Field for Multi-Line Graphs

Calculation

```
""
```

NUMDAYS

of days in Report

Calculation

```
DAYSINREPORT()
```

© Copyright IBM Corp. 2008, 2009. All Rights Reserved.

NUMHOURS

of hours in Summation Data

Calculation

VpcTp_RNC Peg Counts

The following is a list of peg counts for the VpcTp_RNC entity.

PERLENSEC

Period Length

Data Source

NodeB_RNC_RXI

Source Field

perlensec

Source Section

VpcTp_RNC_WMGeneral

PERLENSEC_K

Period length in seconds aggregation summation in time domain and aggregation maximum between Network Elements.

Data Source

NodeB_RNC_RXI

Source Field

perlensec

Source Section

VpcTp_RNC_WMGeneral

pmBwErrBlocks

Number of backward errored blocks.

Data Source

NodeB_RNC_RXI

Source Field

pmBwErrBlocks

Source Section

VpcTp_RNC

pmBwLostCells

Number of backward lost cells.

Data Source

NodeB_RNC_RXI

Source Field

pmBwLostCells

Source Section

VpcTp_RNC

pmBwMissinsCells

Number of backward misinserted cells.

Data Source

NodeB_RNC_RXI

Source Field

pmBwMissinsCells

Source Section

VpcTp_RNC

pmFwErrBlocks

Number of forwarded errored blocks.

Data Source

NodeB_RNC_RXI

© Copyright IBM Corp. 2008, 2009. All Rights Reserved.

Source Field

pmFwErrBlocks

Source Section

VpcTp_RNC

pmFwLostCells

Number of forwarded lost cells.

Data Source

NodeB_RNC_RXI

Source Field

pmFwLostCells

Source Section

VpcTp_RNC

pmFwMissinsCells

Number of forwarded misinserted cells.

Data Source

NodeB_RNC_RXI

Source Field

pmFwMissinsCells

Source Section

VpcTp_RNC

pmLostBrCells

Number of lost bit rate cells.

Data Source

NodeB_RNC_RXI

Source Field

pmLostBrCells

Source Section

VpcTp_RNC

pmLostFpmCells

Number of lost Forward Performance Monitoring (FPM) cells.

Data Source

NodeB_RNC_RXI

Source Field

pmLostFpmCells

Source Section

VpcTp_RNC

RNC_RELEASE

Release

Data Source

NodeB_RNC_RXI

Source Section

VpcTp_RNC

VplTp_NodeB Primitive Calculations

The following is a list of primitive calculations for the VplTp_NodeB entity.

Avr_CellRate_Recieved_VplTp_NodeB

Average Received CellRate in the measurement period.

Calculation

```
pmReceivedAtmCells / PERLENSEC
```

Avr_CellRate_Transmitted_VplTp_NodeB

Average Transmitted CellRate in the measurement period.

Calculation

```
pmTransmittedAtmCells / PERLENSEC
```

© Copyright IBM Corp. 2008, 2009. All Rights Reserved.

GRAPHmultiLineSeparator

Special Control Field for Multi-Line Graphs

Calculation

```
""
```

NUMDAYS

of days in Report

Calculation

```
DAYSINREPORT()
```

NUMHOURS

of hours in Summation Data

Calculation

VplTp_NodeB Peg Counts

The following is a list of peg counts for the VplTp_NodeB entity.

NodeB_RELEASE

Release

Data Source

NodeB_RNC_RXI

Source Section

VplTp_NodeB

PERLENSEC

Period Length

Data Source

NodeB_RNC_RXI

Source Field

perlensec

Source Section

VplTp_NodeB_WMGeneral

PERLENSEC_K

Period length in seconds aggregation summation in time domain and aggregation maximum between Network Elements.

Data Source

NodeB_RNC_RXI

Source Field

perlensec

Source Section

VplTp_NodeB_WMGeneral

pmReceivedAtmCells

Number of received ATM cells.

Data Source

NodeB_RNC_RXI

Source Field

pmReceivedAtmCells

Source Section

VplTp_NodeB

pmTransmittedAtmCells

Number of transmitted ATM cells.

Data Source

NodeB_RNC_RXI

Source Field

pmTransmittedAtmCells

© Copyright IBM Corp. 2008, 2009. All Rights Reserved.

Source Section

VplTp_NodeB

VplTp_RNC Primitive Calculations

The following is a list of primitive calculations for the VplTp_RNC entity.

Avr_CellRate_Recieved_VplTp_RNC

Average Received CellRate in the measurement period.

Calculation

```
pmReceivedAtmCells / PERLENSEC
```

Avr_CellRate_Transmitted_VplTp_RNC

Average Transmitted CellRate in the measurement period.

Calculation

```
pmTransmittedAtmCells / PERLENSEC
```

GRAPHmultiLineSeparator

Special Control Field for Multi-Line Graphs

Calculation

```
""
```

NUMDAYS

of days in Report

Calculation

```
DAYSINREPORT()
```

NUMHOURS

of hours in Summation Data

Calculation

VplTp_RNC Peg Counts

The following is a list of peg counts for the VplTp_RNC entity.

PERLENSEC

Period Length

Data Source

NodeB_RNC_RXI

Source Field

perlensec

Source Section

VplTp_RNC_WMGeneral

PERLENSEC_K

Period length in seconds aggregation summation in time domain and aggregation maximum between Network Elements.

Data Source

NodeB_RNC_RXI

Source Field

perlensec

Source Section

VplTp_RNC_WMGeneral

pmReceivedAtmCells

Number of received ATM cells.

Data Source

NodeB_RNC_RXI

Source Field

pmReceivedAtmCells

Source Section

VplTp_RNC

© Copyright IBM Corp. 2008, 2009. All Rights Reserved.

pmTransmittedAtmCells

Number of transmitted ATM cells.

Data Source

NodeB_RNC_RXI

Source Field

pmTransmittedAtmCells

Source Section

VplTp_RNC

RNC_RELEASE

Release

Data Source

NodeB_RNC_RXI

Source Section

VplTp_RNC

Vt15Ttp_NodeB Primitive Calculations

The following is a list of primitive calculations for the Vt15Ttp_NodeB entity.

GRAPHmultiLineSeparator

Special Control Field for Multi-Line Graphs

Calculation

```
""
```

NUMDAYS

of days in Report

Calculation

```
DAYSINREPORT()
```

NUMHOURS

of hours in Summation Data

Calculation

Vt15Ttp_NodeB Peg Counts

The following is a list of peg counts for the Vt15Ttp_NodeB entity.

NodeB_RELEASE

Release

Data Source

NodeB_RXI

Source Field

NodeB_RELEASE

Source Section

Vt15Ttp_NodeB

PERLENSEC

Period length in seconds

Source Field

PERLENSEC

Source Section

Vt15Ttp_NodeB_WMGeneral

PERLENSEC_K

Period length in seconds aggregation summation in time domain and aggregation maximum between Network Elements.

Source Field

PERLENSEC

Source Section

Vt15Ttp_NodeB_WMGeneral

© Copyright IBM Corp. 2008, 2009. All Rights Reserved.

pmEs

The total number of Errored Seconds.

Data Source

NodeB_RXI

Source Field

pmEs

Source Section

Vt15Ttp

pmSes

The total number of Severely Errored Seconds.

Data Source

NodeB_RXI

Source Field

pmSes

Source Section

Vt15Ttp

pmUas

Transmission Unavailable Seconds (UAS). The accumulated unavailable time in seconds during the interval. Unavailable time starts when 10 consecutive Severely Errored Seconds (SES) are detected (them being part of the unavailable time) and ends when 10 consecutive non SES are detected.

Data Source

NodeB_RXI

Source Field

pmUas

Source Section

Vt15Ttp

Vt15Ttp_RNC Primitive Calculations

The following is a list of primitive calculations for the Vt15Ttp_RNC entity.

GRAPHmultiLineSeparator

Special Control Field for Multi-Line Graphs

Calculation

```
""
```

NUMDAYS

of days in Report

Calculation

```
DAYSINREPORT()
```

NUMHOURS

of hours in Summation Data

Calculation

Vt15Ttp_RNC Peg Counts

The following is a list of peg counts for the Vt15Ttp_RNC entity.

PERLENSEC

Period length in seconds

Source Field

PERLENSEC

Source Section

Vt15Ttp_RNC_WMGeneral

PERLENSEC_K

Period length in seconds aggregation summation in time domain and aggregation maximum between Network Elements.

Data Source

NodeB_RNC_RXI

© Copyright IBM Corp. 2008, 2009. All Rights Reserved.

Source Field

PERLENSEC

Source Section

Vt15Ttp_RNC_WMGeneral

pmEs

The total number of Errored Seconds.

Data Source

RNC_RXI

Source Field

pmEs

Source Section

Vt15Ttp

pmSes

The total number of Severely Errored Seconds.

Data Source

RNC_RXI

Source Field

pmSes

Source Section

Vt15Ttp

pmUas

Transmission Unavailable Seconds (UAS). The accumulated unavailable time in seconds during the interval. Unavailable time starts when 10 consecutive Severely Errored Seconds (SES) are detected (them being part of the unavailable time) and ends when 10 consecutive non SES are detected.

Data Source

RNC_RXI

Source Field

pmUas

Source Section

Vt15Ttp

RNC_RELEASE

Release

Data Source

RNC_RXI

Source Field

RNC_RELEASE

Source Section

Vt15Ttp_RNC

© Copyright IBM Corp. 2008, 2009. All Rights Reserved.

Index

A

Aal0TpVccTp_NodeB
- peg counts 2467
- primitive calculations 2467

Aal0TpVccTp_RNC
- peg counts 2471
- primitive calculations 2471

Aal1TpVccTp_NodeB
- peg counts 2475
- primitive calculations 2474

Aal2Ap_NodeB
- peg counts 2479
- primitive calculations 2478

Aal2Ap_RNC
- peg counts 2493
- primitive calculations 2492

Aal2PathVccTp_NodeB
- peg counts 2506
- primitive calculations 2506

Aal2PathVccTp_RNC
- peg counts 2511
- primitive calculations 2511

Aal2Sp_NodeB
- peg counts 2516
- primitive calculations 2515

Aal2Sp_RNC
- peg counts 2518
- primitive calculations 2517

Aal5TpVccTp_NodeB
- peg counts 2519
- primitive calculations 2519

Aal5TpVccTp_RNC
- peg counts 2523
- primitive calculations 2523

AddressFamily
- peg counts 382
- primitive calculations 381

Aich
- peg counts 2527
- primitive calculations 2526

AmrService
- peg counts 2529
- primitive calculations 2529

AntennaBranch
- peg counts 2532
- primitive calculations 2531

APN
- peg counts 386
- primitive calculations 383

AppContext_MSC
- peg counts 1117
- primitive calculations 1117

AtmPort_NodeB
- peg counts 2534
- primitive calculations 2533

AtmPort_RNC
- peg counts 2537
- primitive calculations 2536

AUC
- peg counts 363
- primitive calculations 363

audience 355

available data fields
- GSN 498
- MSC 1856

B

BGPPeerIP
- peg counts 409
- primitive calculations 408

BillingGtw
- peg counts 412
- primitive calculations 411

BSC
- peg counts 1119
- primitive calculations 1118

BSC_NI
- primitive calculations 1242

BSC_SS7Dest
- primitive calculations 1242

BSC_SS7HSLPrmGrp
- peg counts 1243
- primitive calculations 1242

BSC_SS7Link
- peg counts 1261
- primitive calculations 1259

BSC_SS7LinkSet
- peg counts 1330
- primitive calculations 1328

Updated: 2009-07-22

BSC_SS7RouteSet
peg counts 1346
primitive calculations 1345
BSG
peg counts 928
primitive calculations 927
BSSGP
peg counts 415
primitive calculations 414
BTSSite
peg counts 1348
primitive calculations 1347

C

Card
peg counts 421
primitive calculations 417
Carrier
peg counts 2560
primitive calculations 2538
CcDevice
peg counts 2635
primitive calculations 2635
CcDevice_NodeB
peg counts 2637
primitive calculations 2636
CcDevice_RNC
peg counts 2639
primitive calculations 2639
Cell
peg counts 1373
primitive calculations 1348
Cellset
peg counts 1760
primitive calculations 1760
CnOperator
primitive calculations 2641
Connection
peg counts 470
primitive calculations 469
ContinuityCheckService
peg counts 2642
primitive calculations 2641
CsdDigitalService
peg counts 2645
primitive calculations 2643
CsdGsmFhService
peg counts 2655
primitive calculations 2654
CsdModemService
peg counts 2658
primitive calculations 2657

D

DataService_MSC
peg counts 1763
primitive calculations 1762
DcDevice
peg counts 2666
primitive calculations 2665
DcDevice_NodeB
peg counts 2668
primitive calculations 2667
DcDevice_RNC
peg counts 2669
primitive calculations 2669
DestClass
peg counts 473
primitive calculations 472
Destination
peg counts 1764
primitive calculations 1763
DestinationCode
peg counts 1771
primitive calculations 1770
DHCP
peg counts 475
primitive calculations 474
DigitalPath_MSC
peg counts 1774
primitive calculations 1773
DigPathType_BSC
peg counts 1777
primitive calculations 1776
DigPathType_MSC
peg counts 1781
primitive calculations 1780
DirTrunk
peg counts 1784
primitive calculations 1781
Distrib_Group_Switch
peg counts 1795
primitive calculations 1795

© Copyright IBM Corp. 2008, 2009. All Rights Reserved.

DLCI
peg counts 478
primitive calculations 476
documentation
assumptions about prior knowledge .355
font usage 356
typographical conventions 356
user 357
viewing HTML Help 357
viewing PDF 358
DownlinkBaseBandPool
peg counts 2672
primitive calculations 2671
DTISC
peg counts 1799
primitive calculations 1798
DtmfRcvrService
peg counts 2724
primitive calculations 2723
DtmfSenderService
peg counts 2726
primitive calculations 2725

E

E1PhysPathTerm_NodeB
peg counts 2729
primitive calculations 2728
E1PhysPathTerm_RNC
peg counts 2732
primitive calculations 2731
E1Ttp_NodeB
peg counts 2735
primitive calculations 2734
E1Ttp_RNC
peg counts 2737
primitive calculations 2737
ECPool
peg counts 1809
primitive calculations 1808
ECRouteParameterSet
peg counts 2740
primitive calculations 2739
ECServiceRNC
peg counts 2761
primitive calculations 2761
EDchResources
peg counts 2764
primitive calculations 2763
EM
peg counts 1813
primitive calculations 1812
EOSCode
peg counts 1815
primitive calculations 1814
Equipment_NodeB
primitive calculations 2918
Equipment_RNC
primitive calculations 2918
EthernetLink_NodeB
peg counts 2920
primitive calculations 2919
EthernetLink_RNC
peg counts 2923
primitive calculations 2923
Etm1_NodeB
primitive calculations 2926
Etm1_RNC
primitive calculations 2927
Etm4_NodeB
primitive calculations 2927
Etm4_RNC
primitive calculations 2928

F

FastEthernet_NodeB
peg counts 2929
primitive calculations 2928
FastEthernet_RNC
peg counts 2936
primitive calculations 2935
FNR
peg counts 371
primitive calculations 371
font usage
documentation 356
ForwardClass
peg counts 487
primitive calculations 486
FrameSynch
peg counts 2943
primitive calculations 2942
FTPService
peg counts 2407
primitive calculations 2407

Updated: 2009-07-22

G

GeneralProcUnit_NodeB
peg counts 2950
primitive calculations 2949
GeneralProcUnit_RNC
peg counts 2958
primitive calculations 2957
GigaBitEthernet_NodeB
peg counts 2966
primitive calculations 2965
GigaBitEthernet_RNC
peg counts 2979
primitive calculations 2978
Global_Titl_Trans_Typ
peg counts 1816
primitive calculations 1816
Group
peg counts 2411
primitive calculations 2410
GsmRelation
peg counts 2993
primitive calculations 2992
gsmSCF
peg counts 929
primitive calculations 928
GSN
available data fields 498
peg counts 520
primitive calculations 498
GSN_MM_Index
peg counts 774
primitive calculations 774
GSN_OvrProtect
peg counts 786
primitive calculations 785
GSN_SM_Index
peg counts 787
primitive calculations 787
GSNType
primitive calculations 789
GttService
peg counts 3009
primitive calculations 3008

H

Higher_Order_Path
peg counts 1818
primitive calculations 1817
HLR
peg counts 930
primitive calculations 929
HLR_NI
peg counts 977
primitive calculations 976
HLR_SAE
peg counts 978
primitive calculations 977
HLR_SAE_Block
peg counts 981
primitive calculations 981
HLR_SPG
peg counts 982
primitive calculations 982
HLR_SPNode
peg counts 983
primitive calculations 982
HLR_SS7Dest
peg counts 989
primitive calculations 988
HLR_SS7HSLPrmGrp
peg counts 991
primitive calculations 990
HLR_SS7Link
peg counts 1003
primitive calculations 1002
HLR_SS7LinkSet
peg counts 1068
primitive calculations 1067
HLR_SS7RouteSet
peg counts 1083
primitive calculations 1082
HLR_VLR
peg counts 1085
primitive calculations 1084
HLRSubs
peg counts 1823
primitive calculations 1822
HsDschResources
peg counts 3021
primitive calculations 3011

© Copyright IBM Corp. 2008, 2009. All Rights Reserved.

HTML Help format 357

I

ImaGroup_NodeB
peg counts 3407
primitive calculations 3406
ImaGroup_RNC
peg counts 3408
primitive calculations 3408
ImaLink_NodeB
peg counts 3410
primitive calculations 3409
ImaLink_RNC
peg counts 3416
primitive calculations 3415
ImBasicMessage
peg counts 3421
primitive calculations 3421
ImDeviceService
peg counts 3423
primitive calculations 3423
ImMessageComposition
peg counts 3425
primitive calculations 3424
ImService
peg counts 3427
primitive calculations 3426
ImVariableMessage
peg counts 3429
primitive calculations 3429
INAP
peg counts 1092
primitive calculations 1092
InmarsatDeviceService
peg counts 3431
primitive calculations 3431
Interface
peg counts 796
primitive calculations 790
IP_NodeB
peg counts 3434
primitive calculations 3433
IP_RNC
peg counts 3438
primitive calculations 3437
IpAccessHostGpb_NodeB
peg counts 3442
primitive calculations 3441
IpAccessHostGpb_RNC
peg counts 3453
primitive calculations 3452
IpAccessHostMsb_NodeB
peg counts 3463
primitive calculations 3462
IpAccessHostMsb_RNC
peg counts 3468
primitive calculations 3468
IpAccessHostSpb_NodeB
peg counts 3474
primitive calculations 3473
IpAccessHostSpb_RNC
peg counts 3486
primitive calculations 3486
IpAtmLink_NodeB
peg counts 3499
primitive calculations 3498
IpAtmLink_RNC
peg counts 3503
primitive calculations 3502
IpbService
peg counts 3507
primitive calculations 3506
IpEthPacketDataRouter
peg counts 3509
primitive calculations 3509
IpHostLink_NodeB
peg counts 3513
primitive calculations 3512
IpInterface_NodeB
peg counts 3516
primitive calculations 3516
IpInterface_RNC
peg counts 3522
primitive calculations 3522
IpSystem_NodeB
primitive calculations 3527
IpSystem_RNC
primitive calculations 3528
ISDNESG
peg counts 1824
primitive calculations 1823
IubDataStreams
peg counts 3529
primitive calculations 3529

Updated: 2009-07-22

IubEdch
peg counts 3718
primitive calculations 3718
IubLink
peg counts 3725
primitive calculations 3725
IuLink
peg counts 3741
primitive calculations 3740
IurLink
peg counts 3744
primitive calculations 3743

L

LA
peg counts 1830
primitive calculations 1829
LA_RNC
peg counts 3763
primitive calculations 3763
LAPD
peg counts 1838
primitive calculations 1837
LATA
peg counts 1841
primitive calculations 1840
Licensing
primitive calculations 3766
LossRoute
peg counts 1842
primitive calculations 1842
Lower_Order_Path
peg counts 1848
primitive calculations 1848

M

M3uAssociation_NodeB
peg counts 3767
primitive calculations 3767
M3uAssociation_RNC
peg counts 3780
primitive calculations 3779
Map
peg counts 1094
primitive calculations 1093
MAP_AUC
peg counts 364
primitive calculations 364
MapOp
peg counts 1853
primitive calculations 1852
MccService
peg counts 3792
primitive calculations 3792
MediumAccUnit_NodeB
peg counts 3795
primitive calculations 3794
MediumAccUnit_RNC
peg counts 3796
primitive calculations 3796
MfhService
peg counts 3798
primitive calculations 3798
MpcService
peg counts 3800
primitive calculations 3799
MSC
available data fields 1856
peg counts 1869
primitive calculations 1857
MSC_SS7Dest
peg counts 2027
primitive calculations 2026
MSC_SS7HSLPrmGrp
peg counts 2029
primitive calculations 2028
MSC_SS7Link
peg counts 2049
primitive calculations 2045
MSC_SS7LinkSet
peg counts 2119
primitive calculations 2114
MSC_SS7RouteSet
peg counts 2134
primitive calculations 2133
MSCOutTrunk
peg counts 2136
primitive calculations 2135
MSCTrunkDest
peg counts 2139
primitive calculations 2137
MSCTrunkType
peg counts 2143
primitive calculations 2142

© Copyright IBM Corp. 2008, 2009. All Rights Reserved.

Mtp2Tp_NodeB
peg counts 3802
primitive calculations 3801
Mtp2Tp_RNC
peg counts 3807
primitive calculations 3806
Mtp3bAp_NodeB
peg counts 3811
primitive calculations 3810
Mtp3bAp_RNC
peg counts 3813
primitive calculations 3812
Mtp3bSl_NodeB
peg counts 3815
primitive calculations 3814
Mtp3bSl_RNC
peg counts 3818
primitive calculations 3818
Mtp3bSls_NodeB
primitive calculations 3822
Mtp3bSls_RNC
primitive calculations 3822
Mtp3bSp_NodeB
peg counts 3823
primitive calculations 3823
Mtp3bSp_RNC
peg counts 3835
primitive calculations 3834
Mtp3bSrs_NodeB
peg counts 3846
primitive calculations 3845
Mtp3bSrs_RNC
peg counts 3847
primitive calculations 3847
Multiplex_Section
peg counts 2146
primitive calculations 2146

N

NB_MSC
peg counts 2151
primitive calculations 2150
NbapCommon
peg counts 3849
primitive calculations 3848
NbapDedicated
peg counts 3853
primitive calculations 3852
NBCell
peg counts 2185
primitive calculations 2182
NE
peg counts 2412
primitive calculations 2411
NE_Sub
peg counts 2425
primitive calculations 2424
Net_BGPPeerIP
peg counts 833
primitive calculations 833
Net_OSPFArea
peg counts 836
primitive calculations 836
Net_OSPFInterface
peg counts 839
primitive calculations 838
Net_OSPFNeighIP
peg counts 840
primitive calculations 839
Network
peg counts 841
primitive calculations 840
NI
primitive calculations 2195
NniSaalTp_NodeB
peg counts 3856
primitive calculations 3855
NniSaalTp_RNC
peg counts 3861
primitive calculations 3860
NodeB
peg counts 3866
primitive calculations 3865
NodeSynchTp
peg counts 3878
primitive calculations 3878
NrService
peg counts 3882
primitive calculations 3881
NSVC
peg counts 843
primitive calculations 842

Updated: 2009-07-22

O

Os155PhyPathTrm_NodeB
peg counts 3884
primitive calculations 3884
Os155PhyPathTrm_RNC
peg counts 3887
primitive calculations 3887
Ospf_NodeB
peg counts 3890
primitive calculations 3889
Ospf_RNC
peg counts 3892
primitive calculations 3891
OSPFArea
peg counts 845
primitive calculations 844
OspfArea_NodeB
peg counts 3894
primitive calculations 3893
OspfArea_RNC
peg counts 3896
primitive calculations 3895
OSPFInterface
peg counts 847
primitive calculations 847
OspfInterface_NodeB
peg counts 3897
primitive calculations 3897
OspfInterface_RNC
peg counts 3899
primitive calculations 3899
OSPFNeighIP
peg counts 849
primitive calculations 848
OSSRC
peg counts 2438
primitive calculations 2437

P

PacketDataRouter
peg counts 3901
primitive calculations 3901
PacketDataRouter_RNC
peg counts 3906
primitive calculations 3906
PDF format 358
PdrDevice
peg counts 3910
primitive calculations 3909
PdrDevice_NodeB
peg counts 3912
primitive calculations 3911
PdrDevice_RNC
peg counts 3914
primitive calculations 3913
peg counts
Aal0TpVccTp_NodeB 2467
Aal0TpVccTp_RNC 2471
Aal1TpVccTp_NodeB 2475
Aal2Ap_NodeB 2479
Aal2Ap_RNC 2493
Aal2PathVccTp_NodeB 2506
Aal2PathVccTp_RNC 2511
Aal2Sp_NodeB 2516
Aal2Sp_RNC 2518
Aal5TpVccTp_NodeB 2519
Aal5TpVccTp_RNC 2523
AddressFamily 382
Aich 2527
AmrService 2529
AntennaBranch 2532
APN 386
AppContext_MSC 1117
AtmPort_NodeB 2534
AtmPort_RNC 2537
AUC 363
BGPPeerIP 409
BillingGtw 412
BSC 1119
BSC_SS7HSLPrmGrp 1243
BSC_SS7Link 1261
BSC_SS7LinkSet 1330
BSC_SS7RouteSet 1346
BSG 928
BSSGP 415
BTSSite 1348
Card 421
Carrier 2560
CcDevice 2635
CcDevice_NodeB 2637
CcDevice_RNC 2639
Cell 1373

© Copyright IBM Corp. 2008, 2009. All Rights Reserved.

Cellset 1760
Connection 470
ContinuityCheckService 2642
CsdDigitalService 2645
CsdGsmFhService 2655
CsdModemService 2658
DataService_MSC 1763
DcDevice 2666
DcDevice_NodeB 2668
DcDevice_RNC 2669
DestClass 473
Destination 1764
DestinationCode 1771
DHCP 475
DigitalPath_MSC 1774
DigPathType_BSC 1777
DigPathType_MSC 1781
DirTrunk 1784
Distrib_Group_Switch 1795
DLCI 478
DownlinkBaseBandPool 2672
DTISC 1799
DtmfRcvrService 2724
DtmfSenderService 2726
E1PhysPathTerm_NodeB 2729
E1PhysPathTerm_RNC 2732
E1Ttp_NodeB 2735
E1Ttp_RNC 2737
ECPool 1809
ECRouteParameterSet 2740
ECServiceRNC 2761
EDchResources 2764
EM 1813
EOSCode 1815
EthernetLink_NodeB 2920
EthernetLink_RNC 2923
FastEthernet_NodeB 2929
FastEthernet_RNC 2936
FNR 371
ForwardClass 487
FrameSynch 2943
FTPService 2407
GeneralProcUnit_NodeB 2950
GeneralProcUnit_RNC 2958
GigaBitEthernet_NodeB 2966
GigaBitEthernet_RNC 2979
Global_Titl_Trans_Typ 1816
Group 2411
GsmRelation 2993
gsmSCF 929
GSN 520
GSN_MM_Index 774
GSN_OvrProtect 786
GSN_SM_Index 787
GttService 3009
Higher_Order_Path 1818
HLR 930
HLR_NI 977
HLR_SAE 978
HLR_SAE_Block 981
HLR_SPG 982
HLR_SPNode 983
HLR_SS7Dest 989
HLR_SS7HSLPrmGrp 991
HLR_SS7Link 1003
HLR_SS7LinkSet 1068
HLR_SS7RouteSet 1083
HLR_VLR 1085
HLRSubs 1823
HsDschResources 3021
ImaGroup_NodeB 3407
ImaGroup_RNC 3408
ImaLink_NodeB 3410
ImaLink_RNC 3416
ImBasicMessage 3421
ImDeviceService 3423
ImMessageComposition 3425
ImService 3427
ImVariableMessage 3429
INAP 1092
InmarsatDeviceService 3431
Interface 796
IP_NodeB 3434
IP_RNC 3438
IpAccessHostGpb_NodeB 3442
IpAccessHostGpb_RNC 3453
IpAccessHostMsb_NodeB 3463
IpAccessHostMsb_RNC 3468
IpAccessHostSpb_NodeB 3474
IpAccessHostSpb_RNC 3486
IpAtmLink_NodeB 3499
IpAtmLink_RNC 3503
IpbService 3507
IpEthPacketDataRouter 3509

Updated: 2009-07-22

IpHostLink_NodeB 3513
IpInterface_NodeB 3516
IpInterface_RNC 3522
ISDNESG 1824
IubDataStreams 3529
IubEdch 3718
IubLink 3725
IuLink 3741
IurLink 3744
LA 1830
LA_RNC 3763
LAPD 1838
LATA 1841
LossRoute 1842
Lower_Order_Path 1848
M3uAssociation_NodeB 3767
M3uAssociation_RNC 3780
Map 1094
MAP_AUC 364
MapOp 1853
MccService 3792
MediumAccUnit_NodeB 3795
MediumAccUnit_RNC 3796
MfhService 3798
MpcService 3800
MSC 1869
MSC_SS7Dest 2027
MSC_SS7HSLPrmGrp 2029
MSC_SS7Link 2049
MSC_SS7LinkSet 2119
MSC_SS7RouteSet 2134
MSCOutTrunk 2136
MSCTrunkDest 2139
MSCTrunkType 2143
Mtp2Tp_NodeB 3802
Mtp2Tp_RNC 3807
Mtp3bAp_NodeB 3811
Mtp3bAp_RNC 3813
Mtp3bSl_NodeB 3815
Mtp3bSl_RNC 3818
Mtp3bSp_NodeB 3823
Mtp3bSp_RNC 3835
Mtp3bSrs_NodeB 3846
Mtp3bSrs_RNC 3847
Multiplex_Section 2146
NB_MSC 2151
NbapCommon 3849
NbapDedicated 3853
NBCell 2185
NE 2412
NE_Sub 2425
Net_BGPPeerIP 833
Net_OSPFArea 836
Net_OSPFInterface 839
Net_OSPFNeighIP 840
Network 841
NniSaalTp_NodeB 3856
NniSaalTp_RNC 3861
NodeB 3866
NodeSynchTp 3878
NrService 3882
NSVC 843
Os155PhyPathTrm_NodeB 3884
Os155PhyPathTrm_RNC 3887
Ospf_NodeB 3890
Ospf_RNC 3892
OSPFArea 845
OspfArea_NodeB 3894
OspfArea_RNC 3896
OSPFInterface 847
OspfInterface_NodeB 3897
OspfInterface_RNC 3899
OSPFNeighIP 849
OSSRC 2438
PacketDataRouter 3901
PacketDataRouter_RNC 3906
PdrDevice 3910
PdrDevice_NodeB 3912
PdrDevice_RNC 3914
PIU 850
PLMN 1096
PlugInUnit_NodeB 3916
PlugInUnit_RNC 3918
PostServClass 3920
Prach 3924
ProblemCode 2196
Protocol 2439
Protocol_Sub 2445
QOS 2199
RA_GSN 853
RA_RNC 3951
RABType 3956
RACH 3961
Radio 2201

© Copyright IBM Corp. 2008, 2009. All Rights Reserved.

RadioLinks 3982
Ranap 4423
RNC 4439
RncCapacity 4572
RNCModule 4581
RNCSTAT 2202
RXOTS 2209
SAE 2211
SccpAcctCriteria_NodeB 4583
SccpAcctCriteria_RNC 4585
SccpAp_NodeB 4586
SccpAp_RNC 4587
Sccpch 4588
SccpPolicing_NodeB 4598
SccpPolicing_RNC 4599
SccpScrc_NodeB 4600
SccpScrc_RNC 4604
SccpSp_NodeB 4608
SccpSp_RNC 4616
Sctp_NodeB 4624
Sctp_RNC 4632
SecAssoc 856
SecAssoc_Card 858
ServFeature_MSC 2215
SERVICEFEATURE_HLR 1098
SGSN_GGSN 860
SGSN_Map 1099
SGSN_MSC 2216
Site 2452
SpbDeviceGroup_NodeB 4642
SpbDeviceGroup_RNC 4644
SpbDeviceSet_NodeB 4645
SpbDeviceSet_RNC 4647
SPNode 2218
SrcClass 867
SS7 869
SS7Association 877
SSN 879
Sts1SpeTtp_NodeB 4649
Sts1SpeTtp_RNC 4651
Sts3CspeTtp_NodeB 4653
Sts3CspeTtp_RNC 4656
Subcell 2223
SubNetwork 2455
SubServices 1102
Subsystem_Number 2294
Super_Channel 2297
SUPPSERVICE 2312
SUPPSERVICE_HLR 1106
Switch_Netw_Terminal 2317
System 367, 377, 1114
T1Ttp_NodeB 4660
T1Ttp_RNC 4663
T3PhysPathTerm_NodeB 4665
T3PhysPathTerm_RNC 4668
TA_Name 882
TCAP_Obj 2321
TCAP_SubSystem 2325
Time_Slot 2327
TimeSlot 884
ToneSenderService 4671
TrafficType 2332
Transceiver_Group 2345
Transcoder_Subpool 2364
TransportNetw_NodeB 4672
TransportNetw_RNC 4675
TRC 2366
TRD 2370
Trunk 887
TrunkRoute 2383
TsService 4677
UniSaalTp_NodeB 4679
UniSaalTp_RNC 4684
UplinkBaseBandPool 4689
UpMfhService 4756
Ura 4757
UtranCell 4791
UtranRelation 5264
Vc12Ttp_NodeB 5291
Vc12Ttp_RNC 5294
Vc4Ttp_NodeB 5297
Vc4Ttp_RNC 5299
VclTp_NodeB 5303
VclTp_RNC 5322
VirtualChannel 909
VirtualPath 917
VLR 2396
VpcTp_NodeB 5341
VpcTp_RNC 5345
VplTp_NodeB 5349
VplTp_RNC 5351
Vt15Ttp_NodeB 5354
Vt15Ttp_RNC 5356

Updated: 2009-07-22

PIU
peg counts 850
primitive calculations 850
PLMN
peg counts 1096
primitive calculations 1095
PlugInUnit_NodeB
peg counts 3916
primitive calculations 3915
PlugInUnit_RNC
peg counts 3918
primitive calculations 3917
PostServClass
peg counts 3920
primitive calculations 3919
Prach
peg counts 3924
primitive calculations 3924
prerequisites
assumptions in documentation 355
primitive calculations
Aal0TpVccTp_NodeB 2467
Aal0TpVccTp_RNC 2471
Aal1TpVccTp_NodeB 2474
Aal2Ap_NodeB 2478
Aal2Ap_RNC 2492
Aal2PathVccTp_NodeB 2506
Aal2PathVccTp_RNC 2511
Aal2Sp_NodeB 2515
Aal2Sp_RNC 2517
Aal5TpVccTp_NodeB 2519
Aal5TpVccTp_RNC 2523
AddressFamily 381
Aich 2526
AmrService 2529
AntennaBranch 2531
APN 383
AppContext_MSC 1117
AtmPort_NodeB 2533
AtmPort_RNC 2536
AUC 363
BGPPeerIP 408
BillingGtw 411
BSC 1118
BSC_NI 1242
BSC_SS7Dest 1242
BSC_SS7HSLPrmGrp 1242
BSC_SS7Link 1259
BSC_SS7LinkSet 1328
BSC_SS7RouteSet 1345
BSG 927
BSSGP 414
BTSSite 1347
Card 417
Carrier 2538
CcDevice 2635
CcDevice_NodeB 2636
CcDevice_RNC 2639
Cell 1348
Cellset 1760
CnOperator 2641
Connection 469
ContinuityCheckService 2641
CsdDigitalService 2643
CsdGsmFhService 2654
CsdModemService 2657
DataService_MSC 1762
DcDevice 2665
DcDevice_NodeB 2667
DcDevice_RNC 2669
DestClass 472
Destination 1763
DestinationCode 1770
DHCP 474
DigitalPath_MSC 1773
DigPathType_BSC 1776
DigPathType_MSC 1780
DirTrunk 1781
Distrib_Group_Switch 1795
DLCI 476
DownlinkBaseBandPool 2671
DTISC 1798
DtmfRcvrService 2723
DtmfSenderService 2725
E1PhysPathTerm_NodeB 2728
E1PhysPathTerm_RNC 2731
E1Ttp_NodeB 2734
E1Ttp_RNC 2737
ECPool 1808
ECRouteParameterSet 2739
ECServiceRNC 2761
EDchResources 2763
EM 1812
EOSCode 1814

© Copyright IBM Corp. 2008, 2009. All Rights Reserved.

Equipment_NodeB 2918
Equipment_RNC 2918
EthernetLink_NodeB 2919
EthernetLink_RNC 2923
Etm1_NodeB 2926
Etm1_RNC 2927
Etm4_NodeB 2927
Etm4_RNC 2928
FastEthernet_NodeB 2928
FastEthernet_RNC 2935
FNR 371
ForwardClass 486
FrameSynch 2942
FTPService 2407
GeneralProcUnit_NodeB 2949
GeneralProcUnit_RNC 2957
GigaBitEthernet_NodeB 2965
GigaBitEthernet_RNC 2978
Global_Titl_Trans_Typ 1816
Group 2410
GsmRelation 2992
gsmSCF 928
GSN 498
GSN_MM_Index 774
GSN_OvrProtect 785
GSN_SM_Index 787
GSNType 789
GttService 3008
Higher_Order_Path 1817
HLR 929
HLR_NI 976
HLR_SAE 977
HLR_SAE_Block 981
HLR_SPG 982
HLR_SPNode 982
HLR_SS7Dest 988
HLR_SS7HSLPrmGrp 990
HLR_SS7Link 1002
HLR_SS7LinkSet 1067
HLR_SS7RouteSet 1082
HLR_VLR 1084
HLRSubs 1822
HsDschResources 3011
ImaGroup_NodeB 3406
ImaGroup_RNC 3408
ImaLink_NodeB 3409
ImaLink_RNC 3415
ImBasicMessage 3421
ImDeviceService 3423
ImMessageComposition 3424
ImService 3426
ImVariableMessage 3429
INAP 1092
InmarsatDeviceService 3431
Interface 790
IP_NodeB 3433
IP_RNC 3437
IpAccessHostGpb_NodeB 3441
IpAccessHostGpb_RNC 3452
IpAccessHostMsb_NodeB 3462
IpAccessHostMsb_RNC 3468
IpAccessHostSpb_NodeB 3473
IpAccessHostSpb_RNC 3486
IpAtmLink_NodeB 3498
IpAtmLink_RNC 3502
IpbService 3506
IpEthPacketDataRouter 3509
IpHostLink_NodeB 3512
IpInterface_NodeB 3516
IpInterface_RNC 3522
IpSystem_NodeB 3527
IpSystem_RNC 3528
ISDNESG 1823
IubDataStreams 3529
IubEdch 3718
IubLink 3725
IuLink 3740
IurLink 3743
LA 1829
LA_RNC 3763
LAPD 1837
LATA 1840
Licensing 3766
LossRoute 1842
Lower_Order_Path 1848
M3uAssociation_NodeB 3767
M3uAssociation_RNC 3779
Map 1093
MAP_AUC 364
MapOp 1852
MccService 3792
MediumAccUnit_NodeB 3794
MediumAccUnit_RNC 3796
MfhService 3798

Updated: 2009-07-22

MpcService 3799
MSC 1857
MSC_SS7Dest 2026
MSC_SS7HSLPrmGrp 2028
MSC_SS7Link 2045
MSC_SS7LinkSet 2114
MSC_SS7RouteSet 2133
MSCOutTrunk 2135
MSCTrunkDest 2137
MSCTrunkType 2142
Mtp2Tp_NodeB 3801
Mtp2Tp_RNC 3806
Mtp3bAp_NodeB 3810
Mtp3bAp_RNC 3812
Mtp3bSl_NodeB 3814
Mtp3bSl_RNC 3818
Mtp3bSls_NodeB 3822
Mtp3bSls_RNC 3822
Mtp3bSp_NodeB 3823
Mtp3bSp_RNC 3834
Mtp3bSrs_NodeB 3845
Mtp3bSrs_RNC 3847
Multiplex_Section 2146
NB_MSC 2150
NbapCommon 3848
NbapDedicated 3852
NBCell 2182
NE 2411
NE_Sub 2424
Net_BGPPeerIP 833
Net_OSPFArea 836
Net_OSPFInterface 838
Net_OSPFNeighIP 839
Network 840
NI 2195
NniSaalTp_NodeB 3855
NniSaalTp_RNC 3860
NodeB 3865
NodeSynchTp 3878
NrService 3881
NSVC 842
Os155PhyPathTrm_NodeB 3884
Os155PhyPathTrm_RNC 3887
Ospf_NodeB 3889
Ospf_RNC 3891
OSPFArea 844
OspfArea_NodeB 3893
OspfArea_RNC 3895
OSPFInterface 847
OspfInterface_NodeB 3897
OspfInterface_RNC 3899
OSPFNeighIP 848
OSSRC 2437
PacketDataRouter 3901
PacketDataRouter_RNC 3906
PdrDevice 3909
PdrDevice_NodeB 3911
PdrDevice_RNC 3913
PIU 850
PLMN 1095
PlugInUnit_NodeB 3915
PlugInUnit_RNC 3917
PostServClass 3919
Prach 3924
ProblemCode 2196
Protocol 2438
Protocol_Sub 2445
QOS 2198
RA_GSN 852
RA_RNC 3951
RABType 3954
RACH 3961
Radio 2200
RadioLinks 3967
Ranap 4423
RNC 4425
RncCapacity 4572
RNCModule 4580
RNCSTAT 2201
RXOTS 2208
SAE 2211
SAE_Block 2214
SccpAcctCriteria_NodeB 4583
SccpAcctCriteria_RNC 4584
SccpAp_NodeB 4585
SccpAp_RNC 4587
Sccpch 4588
SccpPolicing_NodeB 4597
SccpPolicing_RNC 4598
SccpScrc_NodeB 4599
SccpScrc_RNC 4604
SccpSp_NodeB 4608
SccpSp_RNC 4616
Sctp_NodeB 4623

© Copyright IBM Corp. 2008, 2009. All Rights Reserved.

Sctp_RNC 4631
SecAssoc 855
SecAssoc_Card 857
Sector 4639
ServFeature_MSC 2215
Service 4640
SERVICEFEATURE_HLR 1097
SGSN_GGSN 859
SGSN_Map 1099
SGSN_MSC 2215
Site 2452
Slot_NodeB 4640
Slot_RNC 4641
SpbDeviceGroup_NodeB 4642
SpbDeviceGroup_RNC 4643
SpbDeviceSet_NodeB 4645
SpbDeviceSet_RNC 4646
SpDevicePool 4648
SPG 2216
SPNode 2217
SrcClass 866
SS7 868
SS7Association 876
SSN 879
Sts1SpeTtp_NodeB 4648
Sts1SpeTtp_RNC 4651
Sts3CspeTtp_NodeB 4653
Sts3CspeTtp_RNC 4655
Subcell 2223
SubNetwork 2455
Subrack_NodeB 4658
Subrack_RNC 4658
SubServices 1101
Subsystem_Number 2294
Super_Channel 2296
SUPPSERVICE 2311
SUPPSERVICE_HLR 1105
Switch_Netw_Terminal 2316
Synchr_Digi_paths 2318
System . . . 365, 375, 880, 1112, 2318,
2457, ...4659
T1Ttp_NodeB 4660
T1Ttp_RNC 4662
T3PhysPathTerm_NodeB 4664
T3PhysPathTerm_RNC 4667
TA_Name 882
TCAP_Obj 2320
TCAP_SubSystem 2324
Time_Slot 2326
TimeSlot 884
ToneSenderService 4670
TrafficType 2328
TraffOrigin 2344
Transceiver_Group 2344
Transcoder_Subpool 2364
TransportNetw_NodeB 4671
TransportNetw_RNC 4674
TRC 2365
TRD 2369
Trunk 886
TrunkRoute 2374
TsService 4677
UniSaalTp_NodeB 4678
UniSaalTp_RNC 4683
UplinkBaseBandPool 4688
UpMfhService 4755
Ura 4756
UtranCell 4759
UtranRelation 5262
Vc12Ttp_NodeB 5291
Vc12Ttp_RNC 5293
Vc4Ttp_NodeB 5296
Vc4Ttp_RNC 5299
VclTp_NodeB 5302
VclTp_RNC 5321
VirtualChannel 908
VirtualPath 917
VLR 2395
VpcTp_NodeB 5340
VpcTp_RNC 5344
VplTp_NodeB 5348
VplTp_RNC 5351
Vt15Ttp_NodeB 5353
Vt15Ttp_RNC 5356
ProblemCode
peg counts 2196
primitive calculations 2196
product support 358
product training 358
Protocol
peg counts 2439
primitive calculations 2438
Protocol_Sub
peg counts 2445

Updated: 2009-07-22

primitive calculations 2445
publications
user 357

Q

QOS
peg counts 2199
primitive calculations 2198

R

RA_GSN
peg counts 853
primitive calculations 852
RA_RNC
peg counts 3951
primitive calculations 3951
RABType
peg counts 3956
primitive calculations 3954
RACH
peg counts 3961
primitive calculations 3961
Radio
peg counts 2201
primitive calculations 2200
RadioLinks
peg counts 3982
primitive calculations 3967
Ranap
peg counts 4423
primitive calculations 4423
RNC
peg counts 4439
primitive calculations 4425
RncCapacity
peg counts 4572
primitive calculations 4572
RNCModule
peg counts 4581
primitive calculations 4580
RNCRNC 4425
RNCSTAT
peg counts 2202
primitive calculations 2201
RXOTS
peg counts 2209
primitive calculations 2208

S

SAE
peg counts 2211
primitive calculations 2211
SAE_Block
primitive calculations 2214
SccpAcctCriteria_NodeB
peg counts 4583
primitive calculations 4583
SccpAcctCriteria_RNC
peg counts 4585
primitive calculations 4584
SccpAp_NodeB
peg counts 4586
primitive calculations 4585
SccpAp_RNC
peg counts 4587
primitive calculations 4587
Sccpch
peg counts 4588
primitive calculations 4588
SccpPolicing_NodeB
peg counts 4598
primitive calculations 4597
SccpPolicing_RNC
peg counts 4599
primitive calculations 4598
SccpScrc_NodeB
peg counts 4600
primitive calculations 4599
SccpScrc_RNC
peg counts 4604
primitive calculations 4604
SccpSp_NodeB
peg counts 4608
primitive calculations 4608
SccpSp_RNC
peg counts 4616
primitive calculations 4616
Sctp_NodeB
peg counts 4624
primitive calculations 4623
Sctp_RNC
peg counts 4632
primitive calculations 4631
SecAssoc
peg counts 856

© Copyright IBM Corp. 2008, 2009. All Rights Reserved.

primitive calculations 855
SecAssoc_Card
peg counts 858
primitive calculations 857
Sector
primitive calculations 4639
ServFeature_MSC
peg counts 2215
primitive calculations 2215
Service
primitive calculations 4640
SERVICEFEATURE_HLR
peg counts 1098
primitive calculations 1097
SGSN_GGSN
peg counts 860
primitive calculations 859
SGSN_Map
peg counts 1099
primitive calculations 1099
SGSN_MSC
peg counts 2216
primitive calculations 2215
Site
peg counts 2452
primitive calculations 2452
skills required documentation
assumptions about prior knowledge .355
Slot_NodeB
primitive calculations 4640
Slot_RNC
primitive calculations 4641
software 355
SpbDeviceGroup_NodeB
peg counts 4642
primitive calculations 4642
SpbDeviceGroup_RNC
peg counts 4644
primitive calculations 4643
SpbDeviceSet_NodeB
peg counts 4645
primitive calculations 4645
SpbDeviceSet_RNC
peg counts 4647
primitive calculations 4646
SpDevicePool
primitive calculations 4648
SPG
primitive calculations 2216
SPNode
peg counts 2218
primitive calculations 2217
SrcClass
peg counts 867
primitive calculations 866
SS7
peg counts 869
primitive calculations 868
SS7Association
peg counts 877
primitive calculations 876
SSN
peg counts 879
primitive calculations 879
Sts1SpeTtp_NodeB
peg counts 4649
primitive calculations 4648
Sts1SpeTtp_RNC
peg counts 4651
primitive calculations 4651
Sts3CspeTtp_NodeB
peg counts 4653
primitive calculations 4653
Sts3CspeTtp_RNC
peg counts 4656
primitive calculations 4655
Subcell
peg counts 2223
primitive calculations 2223
SubNetwork
peg counts 2455
primitive calculations 2455
Subrack_NodeB
primitive calculations 4658
Subrack_RNC
primitive calculations 4658
SubServices
peg counts 1102
primitive calculations 1101
Subsystem_Number
peg counts 2294
primitive calculations 2294
Super_Channel
peg counts 2297

Updated: 2009-07-22

primitive calculations 2296
support 358
SUPPSERVICE
peg counts 2312
primitive calculations 2311
SUPPSERVICE_HLR
peg counts 1106
primitive calculations 1105
Switch_Netw_Terminal
peg counts 2317
primitive calculations 2316
Synchr_Digi_paths
primitive calculations 2318
System
peg counts 367, 377, 1114
primitive calculations . . 365, 375, 880, 1112, ...2318, 2457, 4659

T

T1Ttp_NodeB
peg counts 4660
primitive calculations 4660
T1Ttp_RNC
peg counts 4663
primitive calculations 4662
T3PhysPathTerm_NodeB
peg counts 4665
primitive calculations 4664
T3PhysPathTerm_RNC
peg counts 4668
primitive calculations 4667
TA_Name
peg counts 882
primitive calculations 882
TCAP_Obj
peg counts 2321
primitive calculations 2320
TCAP_SubSystem
peg counts 2325
primitive calculations 2324
Time_Slot
peg counts 2327
primitive calculations 2326
TimeSlot
peg counts 884
primitive calculations 884
ToneSenderService
peg counts 4671
primitive calculations 4670
TrafficType
peg counts 2332
primitive calculations 2328
TraffOrigin
primitive calculations 2344
training 358
Transceiver_Group
peg counts 2345
primitive calculations 2344
Transcoder_Subpool
peg counts 2364
primitive calculations 2364
TransportNetw_NodeB
peg counts 4672
primitive calculations 4671
TransportNetw_RNC
peg counts 4675
primitive calculations 4674
TRC
peg counts 2366
primitive calculations 2365
TRD
peg counts 2370
primitive calculations 2369
Trunk
peg counts 887
primitive calculations 886
TrunkRoute
peg counts 2383
primitive calculations 2374
TsService
peg counts 4677
primitive calculations 4677
typographical conventions 356

U

UniSaalTp_NodeB
peg counts 4679
primitive calculations 4678
UniSaalTp_RNC
peg counts 4684
primitive calculations 4683
UplinkBaseBandPool
peg counts 4689

© Copyright IBM Corp. 2008, 2009. All Rights Reserved.

primitive calculations 4688
UpMfhService
peg counts 4756
primitive calculations 4755
Ura
peg counts 4757
primitive calculations 4756
user publications 357
UtranCell
peg counts 4791
primitive calculations 4759
UtranRelation
peg counts 5264
primitive calculations 5262

V

Vc12Ttp_NodeB
peg counts 5291
primitive calculations 5291
Vc12Ttp_RNC
peg counts 5294
primitive calculations 5293
Vc4Ttp_NodeB
peg counts 5297
primitive calculations 5296
Vc4Ttp_RNC
peg counts 5299
primitive calculations 5299
VclTp_NodeB
peg counts 5303
primitive calculations 5302
VclTp_RNC
peg counts 5322
primitive calculations 5321
VirtualChannel
peg counts 909
primitive calculations 908
VirtualPath
peg counts 917
primitive calculations 917
VLR
peg counts 2396
primitive calculations 2395
VpcTp_NodeB
peg counts 5341
primitive calculations 5340
VpcTp_RNC
peg counts 5345
primitive calculations 5344
VplTp_NodeB
peg counts 5349
primitive calculations 5348
VplTp_RNC
peg counts 5351
primitive calculations 5351
Vt15Ttp_NodeB
peg counts 5354
primitive calculations 5353
Vt15Ttp_RNC
peg counts 5356
primitive calculations 5356

© Copyright IBM Corp. 2008, 2009. All Rights Reserved.