Solutions

Performance Data Reference Prospect® 8.0 for Lucent UMTS

Vallent™

Service Management | Performance Management | Professional Services

Notices

This information was developed for products and services offered in the U.S.A.

IBM may not offer the products, services, or features discussed in this document in other countries. Consult your local IBM representative for information on the products and services currently available in your area. Any reference to an IBM product, program, or service is not intended to state or imply that only that IBM product, program, or service may be used. Any functionally equivalent product, program, or service that does not infringe any IBM intellectual property right may be used instead. However, it is the user's responsibility to evaluate and verify the operation of any non-IBM product, program, or service.

IBM may have patents or pending patent applications covering subject matter described in this document. The furnishing of this document does not give you any license to these patents. You can send license inquiries, in writing, to:

IBM Director of Licensing
IBM Corporation
North Castle Drive
Armonk, NY 10504-1785, U.S.A.

For license inquiries regarding double-byte (DBCS) information, contact the IBM Intellectual Property Department in your country or send inquiries, in writing, to:

IBM World Trade Asia Corporation
Licensing
2-31 Roppongi 3-chome, Minato-ku
Tokyo 106, Japan

The following paragraph does not apply to the United Kingdom or any other country where such provisions are inconsistent with local law:
INTERNATIONAL BUSINESS MACHINES CORPORATION PROVIDES THIS PUBLICATION "AS IS" WITHOUT WARRANTY OF ANY KIND, EITHER EXPRESS OR IMPLIED, INCLUDING, BUT NOT LIMITED TO, THE IMPLIED WARRANTIES OF NON-INFRINGEMENT, MERCHANTABILITY OR FITNESS FOR A PARTICULAR PURPOSE. Some states do not allow disclaimer of express or implied warranties in certain transactions, therefore, this statement might not apply to you.

This information could include technical inaccuracies or typographical errors. Changes are periodically made to the information herein; these changes will be incorporated in new editions of the publication. IBM may make improvements and/or changes in the product(s) and/or the program(s) described in this publication at any time without notice.

Any references in this information to non-IBM Web sites are provided for convenience only and do not in any manner serve as an endorsement of those Web sites. The materials at those Web sites are not part of the materials for this IBM product and use of those Web sites is at your own risk.

© Copyright IBM Corp. 1999, 2009. All rights reserved.

IBM may use or distribute any of the information you supply in any way it believes appropriate without incurring any obligation to you.

Licensees of this program who wish to have information about it for the purpose of enabling: (i) the exchange of information between independently created programs and other programs (including this one) and (ii) the mutual use of the information which has been exchanged, should contact:

IBM Corporation
2Z4A/101
11400 Burnet Road
Austin, TX 78758 U.S.A.

Such information may be available, subject to appropriate terms and conditions, including in some cases, payment of a fee.

The licensed program described in this document and all licensed material available for it are provided by IBM under terms of the IBM Customer Agreement, IBM International Program License Agreement or any equivalent agreement between us.

Any performance data contained herein was determined in a controlled environment. Therefore, the results obtained in other operating environments may vary significantly. Some measurements may have been made on development-level systems and there is no guarantee that these measurements will be the same on generally available systems. Furthermore, some measurement may have been estimated through extrapolation. Actual results may vary. Users of this document should verify the applicable data for their specific environment.

Information concerning non-IBM products was obtained from the suppliers of those products, their published announcements or other publicly available sources. IBM has not tested those products and cannot confirm the accuracy of performance, compatibility or any other claims related to non-IBM products. Questions on the capabilities of non-IBM products should be addressed to the suppliers of those products.

This information contains examples of data and reports used in daily business operations. To illustrate them as completely as possible, the examples include the names of individuals, companies, brands, and products. All of these names are fictitious and any similarity to the names and addresses used by an actual business enterprise is entirely coincidental.

Trademarks

IBM, the IBM logo, and ibm.com are trademarks or registered trademarks of International Business Machines Corp., registered in many jurisdictions worldwide. Other product and service names might be trademarks of IBM or other companies. A current list of IBM

trademarks is available on the Web at "Copyright and trademark information" at www.ibm.com/legal/copytrade.shtml.

Intel, Itanium, the Intel Inside logos, and Pentium are trademarks of Intel Corporation in the United States, other countries, or both.

Java and all Java-based trademarks and logos are trademarks or registered trademarks of Sun Microsystems, Inc. in the U.S., and other countries.

Linux is a trademark of Linus Torvalds in the United States, other countries, or both.

Microsoft and Windows are registered trademarks of Microsoft Corporation in the U.S. and other countries.

UNIX is a registered trademark of The Open Group in the United States and other countries.

Other company, product, or service names may be trademarks or service marks of others.

© Copyright IBM Corp. 1999, 2009. All rights reserved.

Table of Contents

Updated: 2009-06-23

© Copyright IBM Corp. 1999, 2009. All rights reserved.

Updated: 2009-06-23

© Copyright IBM Corp. 1999, 2009. All rights reserved.

Updated: 2009-06-23

© Copyright IBM Corp. 1999, 2009. All rights reserved.

© Copyright IBM Corp. 1999, 2009. All rights reserved.

Updated: 2009-06-23

© Copyright IBM Corp. 1999, 2009. All rights reserved.

© Copyright IBM Corp. 1999, 2009. All rights reserved.

© Copyright IBM Corp. 1999, 2009. All rights reserved.

© Copyright IBM Corp. 1999, 2009. All rights reserved.

Updated: 2009-06-23

© Copyright IBM Corp. 1999, 2009. All rights reserved.

© Copyright IBM Corp. 1999, 2009. All rights reserved.

© Copyright IBM Corp. 1999, 2009. All rights reserved.

Updated: 2009-06-23

© Copyright IBM Corp. 1999, 2009. All rights reserved.

Updated: 2009-06-23

© Copyright IBM Corp. 1999, 2009. All rights reserved.

Updated: 2009-06-23

© Copyright IBM Corp. 1999, 2009. All rights reserved.

Updated: 2009-06-23

© Copyright IBM Corp. 1999, 2009. All rights reserved.

Updated: 2009-06-23

© Copyright IBM Corp. 1999, 2009. All rights reserved.

Updated: 2009-06-23

© Copyright IBM Corp. 1999, 2009. All rights reserved.

© Copyright IBM Corp. 1999, 2009. All rights reserved.

© Copyright IBM Corp. 1999, 2009. All rights reserved.

© Copyright IBM Corp. 1999, 2009. All rights reserved.

© Copyright IBM Corp. 1999, 2009. All rights reserved.

Updated: 2009-06-23

© Copyright IBM Corp. 1999, 2009. All rights reserved.

© Copyright IBM Corp. 1999, 2009. All rights reserved.

Updated: 2009-06-23

© Copyright IBM Corp. 1999, 2009. All rights reserved.

Updated: 2009-06-23

© Copyright IBM Corp. 1999, 2009. All rights reserved.

Updated: 2009-06-23

© Copyright IBM Corp. 1999, 2009. All rights reserved.

Updated: 2009-06-23

© Copyright IBM Corp. 1999, 2009. All rights reserved.

Updated: 2009-06-23

© Copyright IBM Corp. 1999, 2009. All rights reserved.

© Copyright IBM Corp. 1999, 2009. All rights reserved.

Updated: 2009-06-23

© Copyright IBM Corp. 1999, 2009. All rights reserved.

Updated: 2009-06-23

© Copyright IBM Corp. 1999, 2009. All rights reserved.

Updated: 2009-06-23

© Copyright IBM Corp. 1999, 2009. All rights reserved.

Updated: 2009-06-23

© Copyright IBM Corp. 1999, 2009. All rights reserved.

© Copyright IBM Corp. 1999, 2009. All rights reserved.

© Copyright IBM Corp. 1999, 2009. All rights reserved.

© Copyright IBM Corp. 1999, 2009. All rights reserved.

© Copyright IBM Corp. 1999, 2009. All rights reserved.

© Copyright IBM Corp. 1999, 2009. All rights reserved.

Updated: 2009-06-23

© Copyright IBM Corp. 1999, 2009. All rights reserved.

© Copyright IBM Corp. 1999, 2009. All rights reserved.

© Copyright IBM Corp. 1999, 2009. All rights reserved.

© Copyright IBM Corp. 1999, 2009. All rights reserved.

Updated: 2009-06-23

© Copyright IBM Corp. 1999, 2009. All rights reserved.

© Copyright IBM Corp. 1999, 2009. All rights reserved.

Updated: 2009-06-23

© Copyright IBM Corp. 1999, 2009. All rights reserved.

Updated: 2009-06-23

© Copyright IBM Corp. 1999, 2009. All rights reserved.

Updated: 2009-06-23

© Copyright IBM Corp. 1999, 2009. All rights reserved.

© Copyright IBM Corp. 1999, 2009. All rights reserved.

Updated: 2009-06-23

© Copyright IBM Corp. 1999, 2009. All rights reserved.

© Copyright IBM Corp. 1999, 2009. All rights reserved.

Updated: 2009-06-23

© Copyright IBM Corp. 1999, 2009. All rights reserved.

Updated: 2009-06-23

© Copyright IBM Corp. 1999, 2009. All rights reserved.

© Copyright IBM Corp. 1999, 2009. All rights reserved.

Updated: 2009-06-23

© Copyright IBM Corp. 1999, 2009. All rights reserved.

Updated: 2009-06-23

© Copyright IBM Corp. 1999, 2009. All rights reserved.

Updated: 2009-06-23

© Copyright IBM Corp. 1999, 2009. All rights reserved.

Updated: 2009-06-23

© Copyright IBM Corp. 1999, 2009. All rights reserved.

Updated: 2009-06-23

© Copyright IBM Corp. 1999, 2009. All rights reserved.

Updated: 2009-06-23

© Copyright IBM Corp. 1999, 2009. All rights reserved.

Updated: 2009-06-23

© Copyright IBM Corp. 1999, 2009. All rights reserved.

Updated: 2009-06-23

© Copyright IBM Corp. 1999, 2009. All rights reserved.

Updated: 2009-06-23

© Copyright IBM Corp. 1999, 2009. All rights reserved.

Updated: 2009-06-23

© Copyright IBM Corp. 1999, 2009. All rights reserved.

Updated: 2009-06-23

© Copyright IBM Corp. 1999, 2009. All rights reserved.

Updated: 2009-06-23

© Copyright IBM Corp. 1999, 2009. All rights reserved.

Updated: 2009-06-23

© Copyright IBM Corp. 1999, 2009. All rights reserved.

Updated: 2009-06-23

© Copyright IBM Corp. 1999, 2009. All rights reserved.

Updated: 2009-06-23

© Copyright IBM Corp. 1999, 2009. All rights reserved.

© Copyright IBM Corp. 1999, 2009. All rights reserved.

© Copyright IBM Corp. 1999, 2009. All rights reserved.

Updated: 2009-06-23

© Copyright IBM Corp. 1999, 2009. All rights reserved.

Updated: 2009-06-23

© Copyright IBM Corp. 1999, 2009. All rights reserved.

Updated: 2009-06-23

© Copyright IBM Corp. 1999, 2009. All rights reserved.

Updated: 2009-06-23

© Copyright IBM Corp. 1999, 2009. All rights reserved.

Updated: 2009-06-23

© Copyright IBM Corp. 1999, 2009. All rights reserved.

Updated: 2009-06-23

© Copyright IBM Corp. 1999, 2009. All rights reserved.

Updated: 2009-06-23

© Copyright IBM Corp. 1999, 2009. All rights reserved.

© Copyright IBM Corp. 1999, 2009. All rights reserved.

© Copyright IBM Corp. 1999, 2009. All rights reserved.

Updated: 2009-06-23

© Copyright IBM Corp. 1999, 2009. All rights reserved.

Updated: 2009-06-23

© Copyright IBM Corp. 1999, 2009. All rights reserved.

Updated: 2009-06-23

© Copyright IBM Corp. 1999, 2009. All rights reserved.

Updated: 2009-06-23

© Copyright IBM Corp. 1999, 2009. All rights reserved.

Updated: 2009-06-23

© Copyright IBM Corp. 1999, 2009. All rights reserved.

© Copyright IBM Corp. 1999, 2009. All rights reserved.

© Copyright IBM Corp. 1999, 2009. All rights reserved.

Updated: 2009-06-23

© Copyright IBM Corp. 1999, 2009. All rights reserved.

Updated: 2009-06-23

© Copyright IBM Corp. 1999, 2009. All rights reserved.

Updated: 2009-06-23

© Copyright IBM Corp. 1999, 2009. All rights reserved.

Updated: 2009-06-23

© Copyright IBM Corp. 1999, 2009. All rights reserved.

Updated: 2009-06-23

© Copyright IBM Corp. 1999, 2009. All rights reserved.

© Copyright IBM Corp. 1999, 2009. All rights reserved.

Updated: 2009-06-23

© Copyright IBM Corp. 1999, 2009. All rights reserved.

© Copyright IBM Corp. 1999, 2009. All rights reserved.

© Copyright IBM Corp. 1999, 2009. All rights reserved.

Updated: 2009-06-23

© Copyright IBM Corp. 1999, 2009. All rights reserved.

© Copyright IBM Corp. 1999, 2009. All rights reserved.

Updated: 2009-06-23

© Copyright IBM Corp. 1999, 2009. All rights reserved.

Updated: 2009-06-23

© Copyright IBM Corp. 1999, 2009. All rights reserved.

Updated: 2009-06-23

© Copyright IBM Corp. 1999, 2009. All rights reserved.

Updated: 2009-06-23

© Copyright IBM Corp. 1999, 2009. All rights reserved.

Updated: 2009-06-23

© Copyright IBM Corp. 1999, 2009. All rights reserved.

1 About This Documentation

The *Performance Data Reference* provides a reference of performance data and fields to use in Prospect® software to create reports. This guide is customized to support Prospect 8.0 (Release 8.0.6) for Lucent UMTS (Release Point 9.3).

This guide was last updated on 23 June 2009.

Please see the current release notes on this product for a list of revision dates for all Prospect publications.

Audience

This guide is intended for technicians and engineers who use the Prospect software to manage and analyze the performance of a telecommunication network.

Required Skills and Knowledge

This guide is intended for users who have knowledge and skills in the following:

- Basics of Windows
- Features and functions of Microsoft Excel
- High school level mathematics
- Basic statistics
- The network from which Prospect software receives data

Document Conventions

This document uses the typographical conventions shown in the following table:

Table 1: General Document Conventions

Format	*Examples*	*Description*
ALL UPPERCASE	• GPS • NULL • MYWEBSERVER	Acronyms, device names, logical operators, registry keys, and some data structures.
Underscore	See Document Conventions	For links within a document or to the Internet. Note that TOC and index links are not underscored. Color of text is determined by browser settings.
Bold	• **Note**: The busy hour determiner is...	Heading text for Notes, Tips, and Warnings.
SMALL CAPS	• The STORED SQL dialog box... • ...click VIEW... • In the main GUI window, select the FILE menu, point to NEW, and then select TRAFFIC TEMPLATE.	Any text that appears on the GUI.
Italic	• A *busy hour* is... • A web server *must* be installed... • See the *User Guide*	New terms, emphasis, and book titles.
`Monospace`	• `./wminstall` • `$ cd /cdrom/cdrom0` • `/xml/dict` • `http://java.sun.com/products/` • `addmsc.sh` • `core.spec` • Type `OK` to continue.	Code text, command line text, paths, scripts, and file names. Text written in the body of a paragraph that the user is expected to enter.

`Monospace Bold`	**`[root] # pkginfo | grep -i perl`**
	`system Perl5 On-Line Manual Pages`
	`system Perl 5.6.1 (POD Documentation)`
	`system Perl 5.6.1`
		For contrast in a code example to show lines the user is expected to enter.

`<Monospace italics>`	`# cd` *`<oracle_setup>`*	Used in code examples: command-line variables that you replace with a real name or value. These are always marked with arrow brackets.
`[square bracket]`	`log-archiver.sh [-i][-w][-t]`	Used in code examples: indicates options.

© Copyright IBM Corp. 1999, 2009. All rights reserved.

User Publications

Prospect software provides the following user publications in HTML or Adobe Portable Document Format (PDF) formats.

Table 2: Prospect User Documentation

Document	*Description*
Administration Guide	Helps an administrator configure and support Prospect core server software to analyze network performance and perform other network or database management tasks.
Administrator's Quick Reference Card	Presents the principal tasks of a Prospect core server administrator in an easy-to-use format.
Expressions Technical Reference	Provides detailed information about expressions used in special calculations for reports.
Installation Guide	Instructions for installing and configuring the Prospect software.
Open Interface API Guide	Describes how the Open Interface tool enhances your access to information about database peg counts and scenarios.
Performance Data Reference	Provides detailed information including entity hierarchies, peg counts, primitive calculations, and forecast expressions specific to your organization.
Release Notes	Provides technology-specific and late-breaking information about a given Prospect release and important details about installation and operation.
Server Preparation Guide	Provides instructions for installing and setting up Solaris and Oracle software before you install Prospect software.
Server Sizing Tool Guide	Helps an administrator use the sizing tool to calculate the system space needed for the Prospect software and database.
User Guide	Provides conceptual information and procedures for using Prospect software for performance and trending analysis.

Viewing the Desktop Client Help Publications

To view the desktop client Help publications, select a guide from the HELP menu of the Prospect graphical user interface or press F1 for context-sensitive Help. To update the Help files, click the HELP menu on the Prospect Explorer, and select UPDATE ALL HELP FILES.

When Help files are updated, they are downloaded automatically from the Prospect server to the Prospect client. A message box notifies you when this download occurs.

Updated: 2009-06-23

Viewing the Publications in PDF

All of the user publications are available in Adobe Portable Document Format (PDF). To open a PDF, you need the Adobe Acrobat Reader. You can download Adobe Acrobat Reader free of charge from the Adobe Web site. For more details about the Acrobat Reader, see the Adobe Web site http://www.adobe.com/ .

Training and Technical Support

Both training and technical support are available for Prospect software. For technical support, contact us at prospect@us.ibm.com. For training, contact us at training@vallent.com.

For more information on product training courses, contact your delivery management team at:

- Americas: tivamedu@us.ibm.com
- Asia Pacific: tivtrainingap@au1.ibm.com
- EMEA: tived@uk.ibm.com

© Copyright IBM Corp. 1999, 2009. All rights reserved.

2 Introduction

This reference contains detailed technical information about Prospect®. The information included in this document includes the following:

- Entity descriptions and reporting hierarchy
- System-defined fields
- Reference of possible Prospect Expressions in primitive calculations

This reference lists most fields that you can include in reports. The fields listed in this reference are system-defined fields and do not reflect the complete list of available fields. Additional fields, such as User-Defined Calculations (UDCs) or External fields, may also be available.

The following table describes the field types in this reference.

Table 1: Field Types

Field Type	***Description***
Data availability	Data availability fields are automatically created for each data file type that is loaded.
Peg count	A performance metric gathered from the wireless network.
Primitive calculation	A performance metric whose value is determined by a set calculation. Some primitive calculations use Prospect expressions. For more information on Prospect expressions, see the *Expressions Technical Reference*.
Roll-up field	Roll-up fields provide aggregated information about a field defined at a child entity level.

© Copyright IBM Corp. 1999, 2009. All rights reserved.

3 CallServer Traffic Entities

The following figures show the Prospect reporting hierarchy for CallServer traffic entities.

Figure 1: Reporting Hierarchy

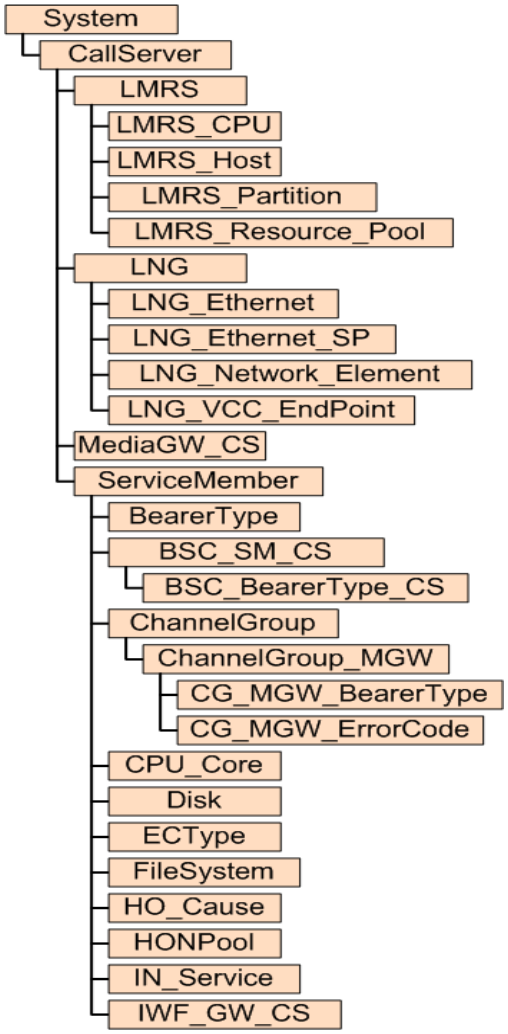

Updated: 2009-06-23

Figure 2: Reporting Hierarchy

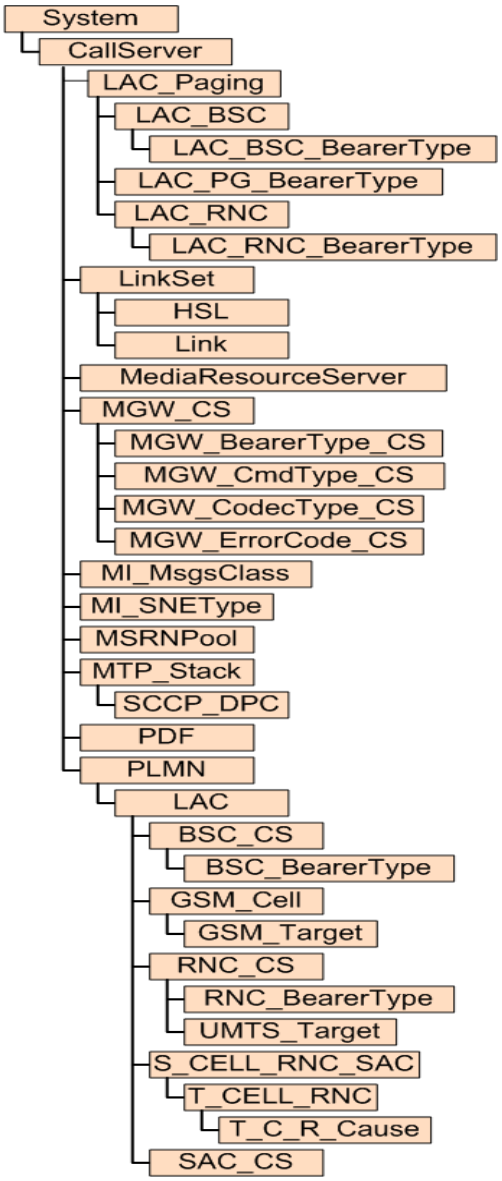

© Copyright IBM Corp. 1999, 2009. All rights reserved.

Figure 3: Reporting Hierarchy

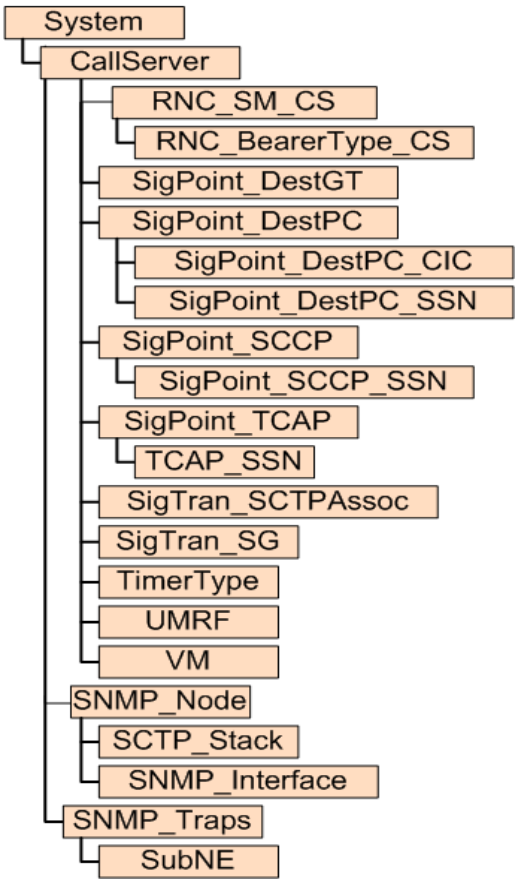

© Copyright IBM Corp. 1999, 2009. All rights reserved.

4 CallServer Traffic Fields

The following is a list of available CallServer Traffic performance data fields.

BearerType Primitive Calculations

The following is a list of primitive calculations for the BearerType entity.

GRAPHmultiLineSeparator

Special Control Field for Multi-Line Graphs

Calculation

```
""
```

NUMDAYS

of days in Report

Calculation

```
DAYSINREPORT()
```

NUMHOURS

of hours in Summation Data

Calculation

BearerType Peg Counts

The following is a list of peg counts for the BearerType entity.

attFirstNoRspPage_GSM

Attempted 1st Page Requests for Non Responding UE (GSM Technology Type). Transmission of 1st paging request to RNC from VLR per Bearer Call Type. VLR record indicates that UE did not respond to a prior paging procedure per Bearer Call Type.

Data Source

Call Server

Source Field

VS.attFirstNoRspPage

Source Section

Paging per Bearer Type(GSM)

attFirstNoRspPage_UMTS

Attempted 1st Page Requests for Non Responding UE (UMTS Technology Type). Transmission of 1st paging request to RNC from VLR per Bearer Call Type. VLR record indicates that UE did not respond to a prior paging procedure per Bearer Call Type.

Data Source

Call Server

Source Field

VS.attFirstNoRspPage

Source Section

Paging per Bearer Type(UMTS)

attFirstNoRspPage_Unknown

Attempted 1st Page Requests for Non Responding UE (Unknown Technology Type). Transmission of 1st paging request to RNC from VLR per Bearer Call Type. VLR record indicates that UE did not respond to a prior paging procedure per Bearer Call Type.

Data Source

Call Server

Source Field

VS.attFirstNoRspPage

Source Section

Paging per Bearer Type(Unknown)

attFirstNoRspPageFlood

Attempted 1st Flood Page Requests for Non Responding UE. Transmission of 1st paging request to RNC from VLR per Bearer Call Type. VLR record indicates that UE didn't respond to a prior paging procedure per Bearer Call Type. (Flood Page)

Data Source

Call Server

Source Field

VS.attFirstNoRspPageFlood

Source Section

Paging

attFirstPageReqs_GSM

Pegged on transmission of the first "PAGING" request to the RNC from VLR (regular paging). For SMS related paging, when the MNRF is set to YES, this count shall NOT be pegged; and when the MNRF is set to NO, this count is pegged.(GSM)

Data Source

Call Server

Source Field

VS.attFirstPageReqs

Source Section

Paging

attFirstPageReqs_UMTS

Pegged on transmission of the first "PAGING" request to the RNC from VLR (regular paging). For SMS related paging, when the MNRF is set to YES, this count shall NOT be pegged; and when the MNRF is set to NO, this count is pegged.(UMTS)

Data Source

Call Server

Source Field

VS.attFirstPageReqs

Source Section

Paging

attFirstPageReqs_Unknown

Pegged on transmission of the first "PAGING" request to the RNC from VLR (regular paging). For SMS related paging, when the MNRF is set to YES, this count shall NOT be pegged; and when the MNRF is set to NO, this count is pegged.(UNKNOWN)

Data Source

Call Server

Source Field

VS.attFirstPageReqs

Source Section

Paging

attFirstPageReqsFlood

Pegged on transmission of 1st flood "PAGING" request to RNC from VLR. For SMS related paging, when the MNRF is set to YES, this count is NOT pegged; and when the MNRF is set to NO, this count is pegged.

Data Source

Call Server

Source Field

VS.attFirstPageReqsFlood

Source Section

Paging

attPageReqs

The number of page requests (these are counted as attempts). It is pegged upon transmission of a MAP_PAGE service request.

Data Source

Call Server

Source Field

attPageReqs

Source Section

Paging

attSecondNoRspPage_GSM

Attempted 2nd Page Requests for Non Responding UE (GSM Technology Type). Transmission of 2nd paging request to RNC from VLR per Bearer Call Type. VLR record indicates that UE did not respond to a prior paging procedure per Bearer Call Type.

Data Source

Call Server

Source Field

VS.attSecondNoRspPage

Source Section

Paging per Bearer Type(GSM)

attSecondNoRspPage_UMTS

Attempted 2nd Page Requests for Non Responding UE (UMTS Technology Type). Transmission of 2nd paging request to RNC from VLR per Bearer Call Type. VLR record indicates that UE did not respond to a prior paging procedure per Bearer Call Type.

Data Source

Call Server

Source Field

VS.attSecondNoRspPage

Source Section

Paging per Bearer Type(UMTS)

attSecondNoRspPage_Unknown

Attempted 2nd Page Requests for Non Responding UE (Unknown Technology Type). Transmission of 2nd paging request to RNC from VLR per Bearer Call Type. VLR record indicates that UE did not respond to a prior paging procedure per Bearer Call Type.

Data Source

Call Server

Source Field

VS.attSecondNoRspPage

Source Section

Paging per Bearer Type(Unknown)

attSecondNoRspPageFlood

Attempt 2nd Flood Page Requests for Non Responding UE. Transmission of 2nd paging request to RNC from VLR per Bearer Call Type. VLR record indicates that UE didn't respond to a prior paging procedure per Bearer Call Type. (Flood Page)

Data Source

Call Server

Source Field

VS.attSecondNoRspPageFlood

Source Section

Paging

attSecondPageFlood

Attempted 2nd Flood Page Requests. Transmission 2nd paging request to RNC from VLR (Flood Paging)

Data Source

Call Server

Source Field

VS.attSecondPageFlood

Source Section

Paging

attSecondPageReq_GSM

Attempted 2nd Page Requests (GSM Technology Type). Transmission of 2nd paging request to RNC from VLR. (Regular Paging)

Data Source

Call Server

Source Field

VS.attSecondPageReq

Source Section

Paging per Bearer Type(GSM)

attSecondPageReq_UMTS

Attempted 2nd Page Requests (UMTS Technology Type). Transmission of 2nd paging request to RNC from VLR. (Regular Paging)

Data Source

Call Server

Source Field

VS.attSecondPageReq

Source Section

Paging per Bearer Type(UMTS)

attSecondPageReq_Unknown

Attempted 2nd Page Requests (Unknown Technology Type). Transmission of 2nd paging request to RNC from VLR. (Regular Paging)

Data Source

Call Server

Source Field

VS.attSecondPageReq

Source Section

Paging per Bearer Type(Unknown)

attThirdPageReq_GSM

Pegged on the transmission of the 3rd paging request to the RNC/BSC from the VLR for regular paging. For SMS related paging, when the MNRF is set to YES, this count is not pegged; and when the MNRF is set to NO, this count is pegged(GSM).

Data Source

Call Server

Source Field

VS.attThirdPageReq

Source Section

Paging

attThirdPageReq_UMTS

Pegged on the transmission of the 3rd paging request to the RNC/BSC from the VLR for regular paging. For SMS related paging, when the MNRF is set to YES, this count is not pegged; and when the MNRF is set to NO, this count is pegged(UMTS).

Data Source

Call Server

Source Field

VS.attThirdPageReq

Source Section

Paging

attThirdPageReq_Unknown

Pegged on the transmission of the 3rd paging request to the RNC/BSC from the VLR for regular paging. For SMS related paging, when the MNRF is set to YES, this count is not pegged; and when the MNRF is set to NO, this count is pegged (UNKNOWN).

Data Source

Call Server

Source Field

VS.attThirdPageReq

Source Section

Paging

attThirdPageReqsFlood

Pegged on the transmission of the 3rd flood paging request to the RNC/BSC from the VLR for regular flood paging. For SMS related paging, when the MNRF is set to YES, this count is not pegged; and when the MNRF is set to NO, this count is pegged.

Data Source

Call Server

Source Field

VS.attThirdPageReqsFlood

Source Section

Paging

Data_Interval

Data interval for the Call Server data collection in seconds. It is taken from "duration" value of the relevant <granPeriod> tag in the Call Server XML data file.

Data Source

Call Server

Source Field

<granPeriod> tag "duration"

noPageResponses

Number of No Response to Paging per bearer call type

Data Source

Call Server

Source Field

VS.noPageResponses

Source Section

Paging per Bearer Type

numSubsNoPageResp_GSM

Number of Subscribers That Did Not Respond to a Second Page (GSM Technology Type). This measurement counts the number of subscribers which did not respond to the second attempt at

paging or flood paging per Bearer Call Type and NRSF is not currently set in the subscribers VLR record. It is not pegged if NRSF is set in the subscriber's VLR

Data Source

Call Server

Source Field

VS.numSubsNoPageResp

Source Section

Paging per Bearer Type(GSM)

numSubsNoPageResp_UMTS

Number of Subscribers That Did Not Respond to a Second Page (UMTS Technology Type). This measurement counts the number of subscribers which did not respond to the second attempt at paging or flood paging per Bearer Call Type and NRSF is not currently set in the subscribers VLR record. It is not pegged if NRSF is set in the subscriber's VLR

Data Source

Call Server

Source Field

VS.numSubsNoPageResp

Source Section

Paging per Bearer Type(UMTS)

numSubsNoPageResp_Unknown

Number of Subscribers That Did Not Respond to a Second Page (Unknown Technology Type). This measurement counts the number of subscribers which did not respond to the second attempt at paging or flood paging per Bearer Call Type and NRSF is not currently set in the subscribers VLR record. It is not pegged if NRSF is set in the subscriber's V

Data Source

Call Server

Source Field

VS.numSubsNoPageResp

Source Section

Paging per Bearer Type(Unknown)

succFirstNoRspPage_GSM

Successful 1st Page Requests for Non Responding UE (GSM Technology Type). Receipt of a "PAG_RSP" from RNC for the first page request per VLR. ("PAG_RSP" from previously non responding UE.)

Data Source

Call Server

Source Field

VS.succFirstNoRspPage

Source Section

Paging per Bearer Type(GSM)

succFirstNoRspPage_UMTS

Successful 1st Page Requests for Non Responding UE (UMTS Technology Type). Receipt of a "PAG_RSP" from RNC for the first page request per VLR. ("PAG_RSP" from previously non responding UE.)

Data Source

Call Server

Source Field

VS.succFirstNoRspPage

Source Section

Paging per Bearer Type(UMTS)

succFirstNoRspPage_Unknown

Successful 1st Page Requests for Non Responding UE (Unknown Technology Type). Receipt of a "PAG_RSP" from RNC for the first page request per VLR. ("PAG_RSP" from previously non responding UE.)

Data Source

Call Server

Source Field

VS.succFirstNoRspPage

Source Section

Paging per Bearer Type(Unknown)

succFirstNoRspPageFlood

Successful 1st Flood Page Requests for Non Responding UE. Receipt of a "PAG_RSP" from RNC for the first flood page request per VLR. ("PAG_RSP" from previously non responding UE.)

Data Source

Call Server

Source Field

VS.succFirstNoRspPageFlood

Source Section

Paging

succFirstPageReqs_GSM

Pegged on receipt of "PAGE_RSP" response from RNC for the first page request per VLR count (regular paging).(GSM)

Data Source

Call Server

Source Field

VS.succFirstPageReqs

Source Section

Paging

succFirstPageReqs_UMTS

Pegged on receipt of "PAGE_RSP" response from RNC for the first page request per VLR count (regular paging).(UMTS)

Data Source

Call Server

Source Field

VS.succFirstPageReqs

Source Section

Paging

succFirstPageReqs_Unknown

Pegged on receipt of "PAGE_RSP" response from RNC for the first page request per VLR count (regular paging).(UNKNOWN)

Data Source

Call Server

Source Field

VS.succFirstPageReqs

Source Section

Paging

succFirstPageReqsFlood

Pegged on receipt of PAGE_RSP" response from RNC for the second page request per VLR count (flood paging). It is not pegged for SMS in the case when MNRF (mobile not reachable) flag is set to YES.

Data Source

Call Server

Source Field

VS.succFirstPageReqsFlood

Source Section

Paging

succPageReqs

The number of successful page requests. It is pegged upon receipt of a MAP_PAGE service confirmation without a "user error" parameter value.

Data Source

Call Server

Source Field

succPageReqs

Source Section

Paging

succSecondNoRspPage_GSM

Successful 2nd Page Requests for Non Responding UE (GSM Technology Type). Receipt of a "PAG_RSP" from RNC for the 2nd page request per VLR. ("PAG_RSP" from previously non responding UE.)

Data Source

Call Server

Source Field

VS.succSecondNoRspPage

Source Section

Paging per Bearer Type(GSM)

succSecondNoRspPage_UMTS

Successful 2nd Page Requests for Non Responding UE (UMTS Technology Type). Receipt of a "PAG_RSP" from RNC for the 2nd page request per VLR. (?PAG_RSP? from previously non responding UE.)

Data Source

Call Server

Source Field

VS.succSecondNoRspPage

Source Section

Paging per Bearer Type(UMTS)

succSecondNoRspPage_Unknown

Successful 2nd Page Requests for Non Responding UE (Unknown Technology Type). Receipt of a "PAG_RSP" from RNC for the 2nd page request per VLR. ("PAG_RSP" from previously non responding UE.)

Data Source

Call Server

Source Field

VS.succSecondNoRspPage

Source Section

Paging per Bearer Type(Unknown)

succSecondNoRspPageFlood

Successful 2nd Flood Page Requests for Non Responding UE. Receipt of a "PAG_RSP" from RNC for the second flood page request per VLR. ("PAG_RSP" from previously non responding UE.)

Data Source

Call Server

Source Field

VS.succSecondNoRspPageFlood

Source Section

Paging

succSecondPageReqsFlood

Pegged on receipt of "PAGE_RSP" response from RNC for the second page request per VLR count (flood paging). It is not pegged for SMS in the case when MNRF (mobile not reachable) flag is set to YES.

Data Source

Call Server

Source Field

VS.succSecondPageReqsFlood

Source Section

Paging

succSecondPageReqsReg_GSM

Pegged on receipt of "PAGE_RSP" response from RNC at the 2nd page request per VLR count. It is not pegged for SMS in the case when MNRF (mobile not reachable) flag is set to YES.(GSM)

Data Source

Call Server

Source Field

VS.succSecondPageReqsReg

Source Section

Paging

succSecondPageReqsReg_UMTS

Pegged on receipt of "PAGE_RSP" response from RNC at the 2nd page request per VLR count. It is not pegged for SMS in the case when MNRF (mobile not reachable) flag is set to YES.(UMTS)

Data Source

Call Server

Source Field

VS.succSecondPageReqsReg

Source Section

Paging

succSecondPageReqsReg_Unknown

Pegged on receipt of "PAGE_RSP" response from RNC at the 2nd page request per VLR count. It is not pegged for SMS in the case when MNRF (mobile not reachable) flag is set to YES.(UNKNOWN)

Data Source

Call Server

Source Field

VS.succSecondPageReqsReg

Source Section

Paging

succThirdPageReqsFlood

Pegged the receipt of "PAGE_RSP" response from RNC/BSC for the third flood page request for regular flood paging. It is not pegged for SMS in the case when MNRF (mobile not reachable) flag is set to YES.

Data Source

Call Server

Source Field

VS.succThirdPageReqsFlood

Source Section

Paging

succThirdPageReqsReg_GSM

Pegged on the receipt of a "PAGE_RSP" response from RNC/BSC at the 3rd page request per for regular paging. It is not pegged for SMS in the case when MNRF (mobile not reachable) flag is set to YES(GSM).

Data Source

Call Server

Source Field

VS.succThirdPageReqsReg

Source Section

Paging

succThirdPageReqsReg_UMTS

Pegged on the receipt of a "PAGE_RSP" response from RNC/BSC at the 3rd page request per for regular paging. It is not pegged for SMS in the case when MNRF (mobile not reachable) flag is set to YES(UMTS).

Data Source

Call Server

Source Field

VS.succThirdPageReqsReg

Source Section

Paging

succThirdPageReqsReg_Unknown

Pegged on the receipt of a "PAGE_RSP" response from RNC/BSC at the 3rd page request per for regular paging. It is not pegged for SMS in the case when MNRF (mobile not reachable) flag is set to YES(UNKNOWN).

Data Source

Call Server

Source Field

VS.succThirdPageReqsReg

Source Section

Paging

BSC_BearerType Primitive Calculations

The following is a list of primitive calculations for the BSC_BearerType entity.

GRAPHmultiLineSeparator

Special Control Field for Multi-Line Graphs

Calculation

```
""
```

NUMDAYS

of days in Report

Calculation

```
DAYSINREPORT()
```

NUMHOURS

of hours in Summation Data

Calculation

BSC_BearerType Peg Counts

The following is a list of peg counts for the BSC_BearerType entity.

attPageReqBSC

Pegged for the first attempt page request only for each BSC that's being paged.

Data Source

Call Server

Source Field

VS.attPageReqBSC

Source Section

Paging

succPageReqBSC

Pegged for a successful page requests against the LAC BSC where the page response was received.

Data Source

Call Server

Source Field

VS.succPageReqBSC

Source Section

Paging

BSC_BearerType_CS Primitive Calculations

The following is a list of primitive calculations for the BSC_BearerType_CS entity.

GRAPHmultiLineSeparator

Special Control Field for Multi-Line Graphs

Calculation

```
""
```

NUMDAYS

of days in Report

Calculation

```
DAYSINREPORT()
```

NUMHOURS

of hours in Summation Data

BSC_BearerType_CS Peg Counts

The following is a list of peg counts for the BSC_BearerType_CS entity.

throttledFloodPages4RANoverload

Pegged when the MSC decides not to flood page a mobile terminating call / SMS/ LCS/ CAMEL/SS attempt due to per-RNC/BSC GUI control set to 'Inhibit paging' or 'Reduce Paging by a provisioned %'. When a BSC/RNC reports congestion via OVERLOAD message or when the Service Provider provisions it on the MSC, the MSC will throttle flood paging requests for certain types of pages depending on the level of congestion e.g. for inhibited paging retries or for any page based on a provisioned percentage. Note: Bearer Call Type of SMS, SPCH, and No BSG shall be supported for this count. SPCH in this case shall include speech, fax and circuit switched data. NO BSG shall include mobile terminating CAMEL, unstructured supplementary service data, and location requests. Non-emergency only mobile terminating location requests cause these throttling PM counts to be pegged -- emergency ones don't, as they are not throttled.(BSC)

Data Source

Call Server

Source Field

VS.throttledFloodPages4RANoverload

Source Section

Throttling

BSC_CS Primitive Calculations

The following is a list of primitive calculations for the BSC_CS entity.

GRAPHmultiLineSeparator

Special Control Field for Multi-Line Graphs

Calculation

```
""
```

NUMDAYS

of days in Report

Calculation

```
DAYSINREPORT()
```

NUMHOURS

of hours in Summation Data

BSC_SM_CS Primitive Calculations

The following is a list of primitive calculations for the BSC_SM_CS entity.

GRAPHmultiLineSeparator

Special Control Field for Multi-Line Graphs

Calculation

```
""
```

NUMDAYS

of days in Report

Calculation

```
DAYSINREPORT()
```

NUMHOURS

of hours in Summation Data

BSC_SM_CS Peg Counts

The following is a list of peg counts for the BSC_SM_CS entity.

ansMobileOriginatingCalls

Pegged on receipt of "CC CONNECT ACKNOWLEDGE" Message from the originating MS, for the requested mobile originating call(BSC)

Data Source

Call Server

Source Field

ansMobileOriginatingCalls

Source Section

Call Setup

ansMobileTerminatingCalls

Pegged on the transmission of the CONNECTION ACKNOWLEDGE message to the called MS for the requested mobile terminating call.(BSC)

Data Source

Call Server

Source Field

ansMobileTerminatingCalls

Source Section

Call Setup

attCipheringModeControlProcs

Pegged for each ciphering mode control procedure attempted. It is pegged on the transmission of the CIPHER MODE COMMAND from the 3G-MSC to the RNC.This count was previously implemented as "attSecurityModeControlProcs" and is pegged for UMTS only. (BSC)

Data Source

Call Server

Source Field

attCipheringModeControlProcs

Source Section

Authorization

attInterVLRLocationUpdates

Attempted Inter-VLR Location Updates. Pegged for each inter-VLR location update attempt. It is pegged on receipt of a MAP_UPDATE_LOCATION_AREA service indication, with the

previous location area identifier referring to the Location Area identity of a different VLR, or no VLR.(BSC)

Data Source

Call Server

Source Field

attInterVLRLocationUpdates

Source Section

Location Update

attIntraVLRLocationUpdates

Attempted Intra-VLR Location Updates. Pegged at the VLR application for each intra-VLR location update attempt. It is pegged on receipt of a MAP_UPDATE_LOCATION_AREA service indication, with the previous location area identifier referring to the Location Area identity of the same VLR.(BSC)

Data Source

Call Server

Source Field

attIntraVLRLocationUpdates

Source Section

Location Update

attIntraVLRPerioLocationUpdates

Attempted intra-VLR Location Updates (timebased periodical location update). Pegged on the receipt of "LOCATION UPDATING REQUEST" Message from the MS with previous Location Area identification parameter referring to the Location Area identity of the same VLR. (BSC)

Data Source

Call Server

Source Field

VS.attIntraVLRPerioLocationUpdates

Source Section

Location Update

attMobileOriginatingCalls

Pegged when a new mobile originated call attempt is received on the SS7 Device Server, i.e. the DS has received a SETUP request message from the originating UE.(BSC)

Data Source

Call Server

Source Field

attMobileOriginatingCalls

Source Section

Call Setup

attMobileTerminatingCalls

Pegged on the transmission of SETUP message to the called MS for the requested mobile terminating call.(BSC)

Data Source

Call Server

Source Field

attMobileTerminatingCalls

Source Section

Call Setup

attOpForMobileOriginatingPointToPointSMs

Attempted operations for mobile originating point to point SMs. Pegged on receipt of "RP-DATA" Message. (BSC)

Data Source

Call Server

Source Field

attOpForMobileOriginatingPointToPointSMs

Source Section

SMS

attOpForMobileTerminatingPointToPointSMs

Attempted operations for mobile terminating point to point SMs. Pegged on transmission of "RP-DATA" Message.(BSC)

Data Source

Call Server

Source Field

attOpForMobileTerminatingPointToPointSMs

Source Section

SMS

attTMSIReallocations

Attempted TMSI re-allocations. Pegged on transmission of "TMSI REALLOCATION COMMAND" Message, or a "LOCATION UPDATING ACCEPT" Message where the UE is identified with TMSI.(BSC)

Data Source

Call Server

Source Field

attTMSIReallocations

Source Section

Location Update

externalHDOs

External Handovers. Pegged on receipt of a "RELOCATION REQUIRED" message for MSC controlled Handovers.(BSC)

Data Source

Call Server

Source Field

externalHDOs

Source Section

Handover

imsiAttachProcs

IMSI attach procedures. Pegged on the receipt of "LOCATION UPDATING REQUEST" Message from the MS, indicating an IMSI attach.(BSC)

Data Source

Call Server

Source Field

imsiAttachProcs

Source Section

Location Update

imsiDetachProcs

IMSI detach procedures. Pegged on the receipt of "IMSI DETACH INDICATION" message from the MS(BSC)

Data Source

Call Server

Source Field

imsiDetachProcs

Source Section

Location Update

mobileEmrgcyOrigFailRLSetup

Pegged when a mobile originated call attempt fails due to a Radio Access Bearer (RAB) setup failure (UMTS) or traffic channel setup failure (GSM). For UMTS this count is pegged when the RAB ASSIGNMENT RESPONSE message sent from the RNC indicates if a RAB setup attempt has failed (RAB Failed to Setup or Modify Item IE). For GSM this count is pegged when the ASSIGNMENT FAILURE message sent from the BSC indicates that the traffic channel setup attempt has failed. This does not include a traffic channel setup failure for a Directed Retry Handover. This count is pegged no more than once for each mobile originated emergency call attempt.(BSC)

Data Source

Call Server

Source Field

VS.mobileEmrgcyOrigFailRLSetup

Source Section

Call Setup

mobileOrigAttRejected

Mobile Origination Attempt Rejected. Pegged for a mobile origination attempt that is rejected by the MSC for reasons other than system resource overload related. This includes the following reasons: * The subscriber failed the Identification Procedure on the IMEI resulting in a CM Service Reject being sent to the UE. - This could be a stolen or cloned mobile * The subscriber failed Authentication Procedure because the authentication parameter was out of range * The subscriber failed the Ciphering / Security Procedure(BSC)

Data Source

Call Server

Source Field

VS.mobileOrigAttRejected

Source Section

Call Setup

mobileOrigDroppedRAN

Mobile Origination Dropped - Radio Access Network . Pegged when a mobile originated call is dropped due to a problem in the radio access network. For UMTS this count is pegged on receipt of the RELEASE REQUEST message on the Iu interface which indicates that a dropped call has been detected in the radio access network. For GSM this count is pegged on receipt of the CLEAR REQUEST message on the A-interface which indicates that a dropped call has been detected in the radio access network. If an Inter-MSC Handover completes and then an IU RELEASE REQUEST/CLEAR REQUEST is received by MSC-B MSC-B will forward this message back to MSC-A. In this case MSC-A will release the call and peg the count accordingly. MSC-B also receives the RELEASE or CLEAR REQUEST message but it does not peg the count. This count is pegged no more than once for each mobile originated call attempt that was successfully setup.(BSC)

Data Source

Call Server

Source Field

VS.mobileOrigDroppedRAN

Source Section

Call Setup

mobileOrigFailRLSetup

Mobile Origination Failed Radio Link Setup. Pegged when a mobile originated call attempt fails due to a Radio Access Bearer (RAB) setup failure (UMTS) or traffic channel setup failure (GSM). For UMTS this count is pegged when the RAB ASSIGNMENT RESPONSE message sent from the RNC indicates if a RAB setup attempt has failed (RAB Failed to Setup or Modify Item IE). For GSM this count is pegged when the ASSIGNMENT FAILURE message sent from the BSC indicates that the traffic channel setup attempt has failed. This does not include a traffic channel setup failure for a Directed Retry Handover. This count is pegged no more than once for each mobile originated call attempt. This count is not pegged for mobile emergency originations blocked; there is a separate count for that.(BSC)

Data Source

Call Server

Source Field

VS.mobileOrigFailRLSetup

Source Section

Call Setup

mobileTermAttRejected

Mobile Termination Attempt Rejected. Pegged for a mobile termination attempt that is rejected by the MSC for reasons other than system resource overload related. This includes the following reasons: * The subscriber failed the Identification Procedure on the IMEI resulting in a service reject being sent to the UE. - This could be a stolen or cloned mobile * The subscriber failed Authentication Procedure because the authentication parameter was out of range.(BSC)

Data Source

Call Server

Source Field

VS.mobileTermAttRejected

Source Section

Call Setup

mobileTermDroppedRAN

Mobile Termination Dropped - Radio Access Network. Pegged when a mobile originated call is dropped due to a problem in the radio access network. For UMTS this count is pegged on receipt of the RELEASE REQUEST message on the Iu interface which indicates that a dropped call has been detected in the radio access network. For GSM this count is pegged on receipt of the CLEAR REQUEST message on the A-interface which indicates that a dropped call has been detected in the radio access network. If an Inter-MSC Handover completes and then an IU RELEASE REQUEST/CLEAR REQUEST is received by MSC-B MSC-B will forward this message back to MSC-A. In this case MSC-A will release the call and peg the count accordingly. MSC-B also receives the RELEASE or CLEAR REQUEST message but it does not peg the count. This count is pegged no more than once for each mobile terminated call attempt that was successfully setup.(BSC)

Data Source

Call Server

Source Field

VS.mobileTermDroppedRAN

Source Section

Call Setup

mobileTermFailRLSetup

Mobile Termination Failed Radio Link Setup. Pegged when a mobile terminated call attempt fails due to a Radio Access Bearer (RAB) setup failure (UMTS) or traffic channel setup failure (GSM). For UMTS this count is pegged when the RAB ASSIGNMENT RESPONSE message sent from the RNC indicates if a RAB setup attempt has failed (RAB Failed to Setup or Modify Item IE). For GSM this count is pegged when the ASSIGNMENT FAILURE message sent from the BSC indicates that the traffic channel setup attempt has failed. This does not include a traffic channel setup failure for a Directed Retry Handover. This count is pegged no more than once for each mobile terminated call attempt(BSC)

Data Source

Call Server

Source Field

VS.mobileTermFailRLSetup

Source Section

Call Setup

noAnsMobileTerminatingCalls

Number of successful mobile termination calls not answered by UE. Pegged on timeout waiting for Connect Req message from UE.(BSC)

Data Source

Call Server

Source Field

VS.noAnsMobileTerminatingCalls

Source Section

Call Setup

SS7LocUpdateAtt

The number of SS7 Location Update Attempt transactions that were received at the SS7 Device Server from the radio network.(BSC)

Data Source

Call Server

Source Field

VS.SS7LocUpdateAtt

Source Section

Location Update

SS7LocUpdateAttSucc

The number of SS7 Location Update Attempt transactions that were received at the SS7 Device Server from the radio network and successfully processed.(BSC)

Data Source

Call Server

Source Field

VS.SS7LocUpdateAttSucc

Source Section

Location Update

succCipheringModeControlProcs

Successful ciphering mode control procedures. Pegged for each successful ciphering mode control procedure attempt. It is pegged on the receipt of the CIPHER MODE COMPLETE message at the 3G-MSC. This count was previously implemented as "succSecurityModeControlProcs", and is pegged for UMTS only.(BSC)

Data Source

Call Server

Source Field

succCipheringModeControlProcs

Source Section

Authorization

succInterVLRLocationUpdates

Successful inter-VLR Location Updates. Pegged for each successful inter-VLR location update attempt. It is pegged on the receipt of a MAP_PROVIDE_ROAMING_NUMBER service confirmation without a 'user error' parameter value for an attempted inter-VLR location update.(BSC)

Data Source

Call Server

Source Field

succInterVLRLocationUpdates

Source Section

Location Update

succIntraVLRLocationUpdates

Successful intra-VLR Location Updates. Pegged for each successful intra-VLR location update attempt. It is pegged on the transmission of a MAP_UPDATE_LOCATION_AREA service response without a 'user error' parameter value for an attempted intra-VLR location update.(BSC)

Data Source

Call Server

Source Field

succIntraVLRLocationUpdates

Source Section

Location Update

succIntraVLRPerioLocationUpdates

Successful intra-VLR Location Updates (timebased periodical location update). Pegged on the transmission of "LOCATION UPDATING ACC" Message to the MS" parameter value, for attempted intra-VLR Location Update.(BSC)

Data Source

Call Server

Source Field

VS.succIntraVLRPerioLocationUpdates

Source Section

Location Update

succMobileOriginatingCalls

Successful mobile originating calls. Pegged on the receipt of the RAB ASSIGNMENT COMPLETE (UMTS) or ASSIGNMENT COMPLETE (GSM) message from the originating UE for the requested mobile originating call.(BSC)

Data Source

Call Server

Source Field

succMobileOriginatingCalls

Source Section

Call Setup

succMobileTerminatingCalls

Successful mobile terminating calls. Pegged on the receipt of a RAB ASSIGNMENT COMPLETE (UMTS) or ASSIGNMENT COMPLETE (GSM) message from the terminating UE for the requested mobile terminating call.(BSC)

Data Source

Call Server

Source Field

succMobileTerminatingCalls

Source Section

Call Setup

succMOForwardSM

The number of Mobile Originated SMS Attempts that have been received at the SS7 Device Server (in the SMS Connection Model on the Iu Interface) that have been successfully processed. (BSC)

Data Source

Call Server

Source Field

VS.succMOForwardSM

Source Section

SMS

succMTForwardSM

The number of Mobile Terminated SMS Attempts that have been received at the SS7 Device Server (in the SMS Relay Layer Task from the SMS Service Center) that have been successfully processed. (BSC)

Data Source

Call Server

Source Field

VS.succMTForwardSM

Source Section

SMS

succOpForMobileOriginatingPointToPointSMs

Successful operations for mobile originating point to point SMs. Pegged on transmission of "RP-ACK" Message.(BSC)

Data Source

Call Server

Source Field

succOpForMobileOriginatingPointToPointSMs

Source Section

SMS

succOpForMobileTerminatingPointToPointSMs

Successful operations for mobile terminating point to point SMs. Pegged on receipt of "RP-ACK" Message.(BSC)

Data Source

Call Server

Source Field

succOpForMobileTerminatingPointToPointSMs

Source Section

SMS

succTMSIReallocations

Successful TMSI re-allocations. Pegged on receipt of "TMSI REALLOCATION COMPLETE" Message.(BSC)

Data Source

Call Server

Source Field

succTMSIReallocations

Source Section

Location Update

transSubIdentifiedWithIMSI

Transactions on the MM-layer where subscriber was identified with IMSI. Pegged for any MM-layer transaction initiated by IMSI, which causes the UE to be identified with his IMSI. I.e. CM_re-establishment, CM_service request, IMSI detach indication, location update request.(BSC)

Data Source

Call Server

Source Field

transSubIdentifiedWithIMSI

Source Section

Location Update

transSubIdentifiedWithTMSI

Transactions on the MM-layer where subscriber was identified with TMSI. Pegged for any MM-layer transaction initiated with a TMSI. I.e. CM_re-establishment, CM_service request, IMSI detach indication, location update request.(BSC)

Data Source

Call Server

Source Field

transSubIdentifiedWithTMSI

Source Section

Location Update

CallServer Primitive Calculations

The following is a list of primitive calculations for the CallServer entity.

GRAPHmultiLineSeparator

Special Control Field for Multi-Line Graphs

Calculation

""

Updated: 2009-06-23

NUMDAYS

of days in Report

Calculation

```
DAYSINREPORT()
```

NUMHOURS

of hours in Summation Data

Calculation

CG_MGW_BearerType Primitive Calculations

The following is a list of primitive calculations for the CG_MGW_BearerType entity.

GRAPHmultiLineSeparator

Special Control Field for Multi-Line Graphs

Calculation

```
""
```

NUMDAYS

of days in Report

Calculation

```
DAYSINREPORT()
```

NUMHOURS

of hours in Summation Data

Calculation

CG_MGW_BearerType Peg Counts

The following is a list of peg counts for the CG_MGW_BearerType entity.

CallDropLOBC

Dropped Call Failure - Loss of Bearer Channel

Data Source

Call Server

Source Field

VS.CallDropLOBC

Source Section

Call Setup

Data_Interval

Data interval for the Call Server data collection in seconds. It is taken from "duration" value of the relevant <granPeriod> tag in the Call Server XML data file.

Data Source

Call Server

Source Field

<granPeriod> tag "duration"

CG_MGW_ErrorCode Primitive Calculations

The following is a list of primitive calculations for the CG_MGW_ErrorCode entity.

GRAPHmultiLineSeparator

Special Control Field for Multi-Line Graphs

Calculation

```
""
```

NUMDAYS

of days in Report

Calculation

```
DAYSINREPORT()
```

NUMHOURS

of hours in Summation Data

Calculation

CG_MGW_ErrorCode Peg Counts

The following is a list of peg counts for the CG_MGW_ErrorCode entity.

inCallBlkdMGW

Pegged when an incoming call attempt is blocked because of the unavailability of internal media gateway resources needed to serve the call.

Data Source

Call Server

Source Field

VS.inCallBlkdMGW

Source Section

Call Setup

outCallBlkdMGW

Pegged when an outgoing call attempt is blocked because of the unavailability of internal media gateway resources needed to serve the call.

Data Source

Call Server

Source Field

VS.outCallBlkdMGW

Source Section

Call Setup

ChannelGroup Primitive Calculations

The following is a list of primitive calculations for the ChannelGroup entity.

CallAttempts

Call Attempts

Calculation

```
vsum (InCallAtt, OutCallAtt, 0)
```

Updated: 2009-06-23

CallDropCO

Dropped Call Failure - Cut-offs

Calculation

```
vsum(CallDropCO_0302,sum(ChannelGroup_MGW,CallDropCO))
```

CallDropLOBC

Dropped Call Failure - Loss of Bearer Channel

Calculation

```
vsum(CallDropLOBC_0302,sum(ChannelGroup_MGW,CallDropLOBC))
```

CallSetupSuccessRate

Successful Call Setup Rate %

Calculation

```
vsum (InCallAns, OutCallSetupSucc, 0) * 100.0 / vsum (InCallAtt, OutCal-
lAtt, 0)
```

GRAPHmultiLineSeparator

Special Control Field for Multi-Line Graphs

Calculation

```
""
```

InCallCotAtt

Incoming Call Attempts - Continuity Check Attempts

Calculation

```
vsum(InCallCotAtt_0302,sum(ChannelGroup_MGW,InCallCotAtt))
```

InCallCotFail

Incoming Call Attempts - Failed Continuity Check

Calculation

```
vsum(InCallCotFail_0302,sum(ChannelGroup_MGW,InCallCotFail))
```

InCallCotSucc

Incoming Call Attempts - Successful Continuity Check

Calculation

```
vsum(InCallCotSucc_0302,sum(ChannelGroup_MGW,InCallCotSucc))
```

InCallFailBearerSetup

Failed Incoming Call Attempts - Bearer Setup Failure

Calculation

```
vsum(InCallFailBearerSetup_0302,sum(ChannelGroup_MGW,InCallFailBear-
erSetup))
```

InCallFailUnsupBT

Failed Incoming Call Attempts - Unsupported Bearer Type

Calculation

```
vsum(InCallFailUnsupBT_0302,sum(ChannelGroup_MGW,InCallFailUnsupBT))
```

InCallNoCotFail

No vendor documentation could be found for this metric.

Calculation

```
vsum(InCallNoCotFail_0302,sum(ChannelGroup_MGW,InCallNoCotFail))
```

MeanHoldingTime

Mean Holding Time in seconds.

Calculation

```
VoiceChannelUsage * 1.0 / SuccessfulCallAttempts
```

MeanTrafficCarried

Mean Traffic Carried. Average number of channels used for voice.

Calculation

```
VoiceChannelUsage * 1.0 / Data_Interval
```

NUMDAYS

of days in Report

Calculation

```
DAYSINREPORT()
```

NUMHOURS

of hours in Summation Data

Calculation

OutCallCotAtt

Outgoing Call Attempts - Continuity Check Attempts

Calculation

```
vsum(OutCallCotAtt_0302,sum(ChannelGroup_MGW,OutCallCotAtt))
```

OutCallCotFail

Outgoing Call Attempts - Failed Continuity Check

Calculation

```
vsum(OutCallCotFail_0302,sum(ChannelGroup_MGW,OutCallCotFail))
```

OutCallCotSucc

Outgoing Call Attempts - Successful Continuity Check

Calculation

```
vsum(OutCallCotSucc_0302,sum(ChannelGroup_MGW,OutCallCotSucc))
```

OutCallFailBearerSetup

Failed Outgoing Call Attempts - Bearer Setup Failure

Calculation

```
vsum(OutCallFailBearerSetup_0302,sum(ChannelGroup_MGW,OutCallFailBear-
erSetup))
```

OutCallFailNoACM

Failed Outgoing Attempts - No Address Complete Message

Calculation

```
vsum(OutCallFailNoACM_0302,sum(ChannelGroup_MGW,OutCallFailNoACM))
```

OutCallFailNoANM

Failed Outgoing Attempts - No Answer

Calculation

```
vsum(OutCallFailNoANM_0302,sum(ChannelGroup_MGW,OutCallFailNoANM))
```

OutCallFailUnsupBT

Failed Outgoing Call Attempts - Unsupported Bearer Type

Calculation

```
vsum(OutCallFailUnsupBT_0302,sum(ChannelGroup_MGW,OutCallFailUnsupBT))
```

Updated: 2009-06-23

PSTN_IncomingCallSuccessRate

PSTN Incoming Call Success Rate %

Calculation

```
InCallSetupSucc * 100.0 / vsum (InCallAtt, -1.0 * InCallFailDA)
```

PSTN_OutgoingCallSuccessRate

PSTN Outgoing Call Success Rate %

Calculation

```
OutCallSetupSucc * 100.0 / OutCallAtt
```

SuccessfulCallAttempts

Successful Call Attempts

Calculation

```
vsum (InCallAns, OutCallSetupSucc, 0)
```

VoiceChannelUsage

Voice Channel Usage. This is the total number of seconds that the channels were used.

Calculation

```
vsum (channelTotalUsed, -1.0 * channelMaintUsed, 0) * 100
```

ChannelGroup Peg Counts

The following is a list of peg counts for the ChannelGroup entity.

attNumCCCReqPerCCCTG

Pegged for each Call Content Channel request, either the Tx or the Rx and regardless of the result, Pegged on a per CALEA channel group basis.

Data Source

Call Server

Source Field

VS.attNumCCCReqPerCCCTG

Source Section

CALEA

Updated: 2009-06-23

attPBCodecModAPM

This count shall be pegged when the switch sends an APM to an adjoining switch to attempt a packet bearer codec modification.

Data Source

Call Server

Source Field

VS.attPBCodecModAPM

Source Section

Call Setup

attPBMidcallReneg

This count shall be pegged when the switch attempts a packet bearer mid call renegotiation with an adjoining switch.

Data Source

Call Server

Source Field

VS.attPBMidcallReneg

Source Section

Call Setup

aveCallDuration

Reports the average hold time for answered calls, based on the call duration from the CDRs. It represents the average call duration as measured from answer to release.

Data Source

Call Server

Source Field

VS.aveCallDuration

Source Section

Traffic Profiling

CallCancel

Calls Cancelled by Signalling Problems: The number of calls cancelled because of signalling failure. Signalling failure was the cause of the failure of the final call attempt; no other attempts to place the call followed.

Data Source

Call Server

Source Field

VS.CallCancel

Source Section

Per CS Service Member, Per Channel Group

channelMaintUsed

Maintenance Channel Usage: 100-second scan of the Instantaneous Maintenance Use Count

Data Source

Call Server

Source Field

VS.channelMaintUsed

Source Section

Per CS Service Member, per Channel Group

channelTotalUsed

Total Channel Usage: 100-second scan of the Instantaneous Total Use Count

Data Source

Call Server

Source Field

VS.channelTotalUsed

Source Section

Per CS Service Member, per Channel Group

Data_Interval

Data interval for the Call Server data collection in seconds. It is taken from "duration" value of the relevant <granPeriod> tag in the Call Server XML data file.

Data Source

Call Server

Source Field

<granPeriod> tag "duration"

InCallAns

Incoming Answered Calls

Data Source

Call Server

Source Field

VS.InCallAns

Source Section

Per CS Service Member, per Channel Group

InCallAtt

Incoming Call Attempts

Data Source

Call Server

Source Field

VS.InCallAtt

Source Section

Per CS Service Member, per Channel Group

InCallFailCong

Failed Incoming Call Attempts - Congestion

Data Source

Call Server

Source Field

VS.InCallFailCong

Source Section

Per CS Service Member, per Channel Group

InCallFailDA

Failed Incoming Attempts - Digit Analysis

Data Source

Call Server

Source Field

VS.InCallFailDA

Source Section

Per CS Service Member, per Channel Group

InCallFailRt

Failed Incoming Call Attempts - Routing

Data Source

Call Server

Source Field

VS.InCallFailRt

Source Section

Per CS Service Member, per Channel Group

InCallGlareDetected

Incoming Call Attempts - Glare Detected

Data Source

Call Server

Source Field

VS.InCallGlareDetected

Source Section

Per SS7 Service Member, per Channel Group, CGName

InCallSetupSucc

Successful Incoming Call Setups

Data Source

Call Server

Source Field

VS.InCallSetupSucc

Source Section

Per CS Service Member, per Channel Group

instantAnsCallUseCount

Instantaneous Answered Call Use Count: The instantaneous number of channels in use by answered call traffic.

Data Source

Call Server

Source Field

VS.instantAnsCallUseCount

Source Section

Per CS Service Member, per Channel Group

instantMaintUseCount

Instantaneous Maintenance Use Count: The instantaneous number of channels in use for any reason (generally maintenance) other than customer traffic.

Data Source

Call Server

Source Field

VS.instantMaintUseCount

Source Section

Per CS Service Member, per Channel Group

instantTotalUseCount

Instantaneous Total Use Count The instantaneous number of channels in use by both traffic and maintenance.

Data Source

Call Server

Source Field

VS.instantTotalUseCount

Source Section

Per CS Service Member, per Channel Group

OutCallAns

Outgoing Calls Answered

Data Source

Call Server

Source Field

VS.OutCallAns

Source Section

Per CS Service Member, per Channel Group

OutCallAtt

Outgoing Call Attempts

Data Source

Call Server

Source Field

VS.OutCallAtt

Source Section

Per CS Service Member, per Channel Group

OutCallChannelGroupOverflow

Failed Outgoing Call Attempts - Channel Group Overflow

Data Source

Call Server

Source Field

VS.OutCallChannelGroupOverflow

Source Section

Per CS Service Member, Per Channel Group

outCallFailOutChanGrpBlkd

This count is pegged for any outgoing call attempt that fails due to outgoing channel group blockage. It is intended to be pegged for the outgoing side of mobile-to-land or land-to-land calls that fail because of outgoing channel group blockage.

Data Source

Call Server

Source Field

VS.outCallFailOutChanGrpBlkd

Source Section

Call Setup

OutCallGlareDetected

Outgoing Call Attempts - Glare Detected

Data Source

Call Server

Source Field

VS.OutCallGlareDetected

Source Section

Per SS7 Service Member, per Channel Group, CGName

OutCallSetupSucc

Successful Outgoing Call Setups

Data Source

Call Server

Source Field

VS.OutCallSetupSucc

Source Section

Per CS Service Member, per Channel Group

succNumCCCReqPerCCCTG

Pegged upon successfully obtaining a Call Content Channel, either the Tx or the Rx. Pegged on a per CALEA channel group basis.

Data Source

Call Server

Source Field

VS.succNumCCCReqPerCCCTG

Source Section

CALEA

succPBCodecModAPM

This count shall be pegged for each successful packet bearer codec modification between this switch and the adjoining switch.

Data Source

Call Server

Source Field

VS.succPBCodecModAPM

Source Section

Call Setup

succPBMidcallReneg

This count shall be pegged for a successful packet bearer mid-call renegotiation between this switch and an adjoining switch.

Data Source

Call Server

Source Field

VS.succPBMidcallReneg

Source Section

Call Setup

switchBasedINQueryAtt

Pegged for Switch Based IN Triggers. Switch based triggers are static provisioned triggers on the MSC that any user can hit.

Data Source

Call Server

Source Field

VS.switchBasedINQueryAtt

Source Section

Traffic Profiling

ChannelGroup_MGW Primitive Calculations

The following is a list of primitive calculations for the ChannelGroup_MGW entity.

CallAttempts

Call Attempts

Calculation

```
vsum (InCallAtt, OutCallAtt, 0)
```

CallDropLOBC

Counter moved to "CG_MGW_BearerType" entity fr 4.1.7.0.0. Dropped Call Failure - Loss of Bearer Channel

Calculation

```
vsum(CallDropLOBC_RP6,sum(CG_MGW_BearerType,CallDropLOBC))
```

CallSetupSuccessRate

Successful Call Setup Rate %

Calculation

```
vsum (InCallAns, OutCallSetupSucc, 0) * 100.0 / vsum (InCallAtt, OutCal-
lAtt, 0)
```

GRAPHmultiLineSeparator

Special Control Field for Multi-Line Graphs

Calculation

```
""
```

MeanHoldingTime

Mean Holding Time in seconds.

Calculation

```
VoiceChannelUsage * 1.0 / SuccessfulCallAttempts
```

MeanTrafficCarried

Mean Traffic Carried. Average number of channels used for voice.

Calculation

```
VoiceChannelUsage * 1.0 / Data_Interval
```

NUMDAYS

of days in Report

Calculation

```
DAYSINREPORT()
```

NUMHOURS

of hours in Summation Data

Calculation

PSTN_IncomingCallSuccessRate

PSTN Incoming Call Success Rate %

Calculation

```
InCallSetupSucc * 100.0 / vsum (InCallAtt, -1.0 * InCallFailDA)
```

PSTN_OutgoingCallSuccessRate

PSTN Outgoing Call Success Rate %

Calculation

```
OutCallSetupSucc * 100.0 / OutCallAtt
```

SuccessfulCallAttempts

Successful Call Attempts

Calculation

```
vsum (InCallAns, OutCallSetupSucc, 0)
```

VoiceChannelUsage

Voice Channel Usage. This is the total number of seconds that the channels were used.

Calculation

```
vsum (channelTotalUsed, -1.0 * channelMaintUsed, 0) * 100
```

ChannelGroup_MGW Peg Counts

The following is a list of peg counts for the ChannelGroup_MGW entity.

AnnSetupAtt

Call Setup Attempts - Announcement

Data Source

Call Server

Updated: 2009-06-23

Source Field

VS.AnnSetupAtt

Source Section

Per CS Service Member, Per Media Gateway, Per Channel Group

AnnSetupSucc

Successful Call Setup Attempts - Announcements

Data Source

Call Server

Source Field

VS.AnnSetupSucc

Source Section

Per CS Service Member, Per Media Gateway, Per Channel Group

avgChanGrpOccRate

This count represents the average channel group occupancy level for each bearer channel group controlled by the LSS including network (PLMN) and mobile channel groups. The occupancy rate of each channel group is sampled every 10 seconds and the average detected occupancy calculated and recorded for each by taking and average of the samples.

Data Source

Call Server

Source Field

VS.avgChanGrpOccRate

Source Section

Channel Group Occupancy

avgChannelMaintUsed

Average Number of Maintenance Channels (Includes OOS channels)

Data Source

Call Server

Source Field

VS.avgChannelMaintUsed

Source Section

Per SS7 Service Member, Per Media Gateway, Per Channel Group

avgTotalInSvcChannels

Average Number of Channels In-Service

Data Source

Call Server

Source Field

VS.avgTotalInSvcChannels

Source Section

Per SS7 Service Member, Per Media Gateway, Per Channel Group

CallDropCO

Dropped Call Failure - Cut-offs

Data Source

Call Server

Source Field

VS.CallDropCO

Source Section

Per CS Service Member, Per Media Gateway, Per Channel Group

channelAnsUsed

Total Channels Answered Call Usage (SS7)

Data Source

Call Server

Source Field

VS.channelAnsUsed

Source Section

Per SS7 Service Member, Per Media Gateway, Per Channel Group

channelAnsUsed_IMS

Total Channels Answered Call Usage (IMS)

Data Source

Call Server

Source Field

VS.channelAnsUsed

Source Section

Per SIP (IMS) Service Member, per Media Gateway, per Channel Group

channelGroupAttempts

This count is pegged for each attempt to allocate a bearer path on a channel group. It is pegged for attempts to allocate a channel on incoming and outgoing PSTN RANAP and BSSAP channel groups. If the Media Gateway is unknown at the time this count is pegged the count is pegged against media gateway.

Data Source

Call Server

Source Field

VS.channelGroupAttempts

Source Section

Channel Group Occupancy

channelGroupOverflows

This count is pegged for each attempt to allocate a bearer path on a channel group that fails because no available channel could be found in the channel group. It is pegged for channel overflows on incoming and outgoing PSTN RANAP and BSSAP channel groups. If the Media Gateway is unknown at the time this count is pegged the count is pegged against media gateway zero.

Data Source

Call Server

Source Field

VS.channelGroupOverflows

Source Section

Channel Group Occupancy

channelMaintUsed

Maintenance Channel Usage: 100-second scan of the Instantaneous Maintenance Use Count

Data Source

Call Server

Source Field

VS.channelMaintUsed

Source Section

Per SS7 Service Member, per Media Gateway, per Channel Group

channelTotalUsed

Total Channel Usage: 100-second scan of the Instantaneous Total Use Count

Data Source

Call Server

Source Field

VS.channelTotalUsed

Source Section

Per SS7 Service Member, per Media Gateway, per Channel Group

Data_Interval

Data interval for the Call Server data collection in seconds. It is taken from "duration" value of the relevant <granPeriod> tag in the Call Server XML data file.

Data Source

Call Server

Source Field

<granPeriod> tag "duration"

InCallAns

Incoming Answered Calls

Data Source

Call Server

Source Field

VS.InCallAns

Source Section

Per SS7 Service Member, Per Media Gateway, Per Channel Group

InCallAtt

Incoming Call Attempts

Data Source

Call Server

Source Field

VS.InCallAtt

Source Section

Per SS7 Service Member, Per Media Gateway, Per Channel Group

InCallCotAtt

Incoming Call Attempts - Continuity Check Attempts

Data Source

Call Server

Source Field

VS.InCallCotAtt

Source Section

Per CS Service Member, Per Media Gateway, Per Channel Group

InCallCotFail

Incoming Call Attempts - Failed Continuity Check

Data Source

Call Server

Source Field

VS.InCallCotFail

Source Section

Per CS Service Member, Per Media Gateway, Per Channel Group

InCallCotSucc

Incoming Call Attempts - Successful Continuity Check

Data Source

Call Server

Source Field

VS.InCallCotSucc

Source Section

Per CS Service Member, Per Media Gateway, Per Channel Group

InCallFailBearerSetup

Failed Incoming Call Attempts - Bearer Setup Failure

Data Source

Call Server

Source Field

VS.InCallFailBearerSetup

Source Section

Per CS Service Member, Per Media Gateway, Per Channel Group

InCallFailCong

Failed Incoming Call Attempts - Congestion

Data Source

Call Server

Source Field

VS.InCallFailCong

Source Section

Per CS Service Member, Per Media Gateway, Per Channel Group

InCallFailDA

Failed Incoming Attempts - Digit Analysis

Data Source

Call Server

Source Field

VS.InCallFailDA

Source Section

Per CS Service Member, Per Media Gateway, Per Channel Group

InCallFailRt

Failed Incoming Call Attempts - Routing

Data Source

Call Server

Source Field

VS.InCallFailRt

Source Section

Per CS Service Member, Per Media Gateway, Per Channel Group

InCallFailUnsupBT

Failed Incoming Call Attempts - Unsupported Bearer Type

Data Source

Call Server

Source Field

VS.InCallFailUnsupBT

Source Section

Per CS Service Member, Per Media Gateway, Per Channel Group

inCallINReleased

Pegged each time the Call Server gets any type of RELEASE from the INHOST in response to a Call Setup TDP.

Data Source

Call Server

Source Field

VS.inCallINReleased

Source Section

Call Setup

InCallNoCotFail

No vendor documentation could be found for this metric.

Data Source

Call Server

Source Field

VS.InCallNoCotFail

Source Section

Per CS Service Member, Per Media Gateway, Per Channel Group

InCallSetupSucc

Successful Incoming Call Setups

Data Source

Call Server

Source Field

VS.InCallSetupSucc

Source Section

Per SS7 Service Member, Per Media Gateway, Per Channel Group

InCcrAtt

This count shall be pegged whenever a Continuity Check Request (CCR) of the incoming circuit is requested. It is pegged for continuity check attempts that are initiated after an IAM

Data Source

Call Server

Source Field

VS.InCcrAtt

Source Section

Per SS7 Service Member, per Media Gateway, per Channel Group

InCcrFail

This count shall be pegged whenever an incoming circuit has failed a Continuity Check Request (CCR).

Data Source

Call Server

Source Field

VS.InCcrFail

Source Section

Per SS7 Service Member, per Media Gateway, per Channel Group

InCcrSucc

This count shall be pegged whenever a Continuity Check Request (CCR) has resulted in a determination of good continuity. This is determined by receipt of a REL message following a CCR.

Data Source

Call Server

Source Field

VS.InCcrSucc

Source Section

Per SS7 Service Member, per Media Gateway, per Channel Group

IncompleteInCcrAtt

This count shall be pegged whenever an incoming circuit has not completed, due to either Tccr,r times-out without receiving a CCR following a COT (failure) message (ANSI only) or T34 times-out without receiving a COT or REL after sending an LPA message (ANSI only) or T36 times-out without receiving a COT or REL after sending a CCR message (ITU only) or Subsequently, for ANSI, and in all cases for ITU, T27 times out without receiving a CCR following a subsequent COT (failure) message.

Data Source

Call Server

Source Field

VS.IncompleteInCcrAtt

Source Section

Per SS7 Service Member, per Media Gateway, per Channel Group

instantAnsCallUseCount

Instantaneous Answered Call Use Count: The instantaneous number of channels in use by answered call traffic.

Data Source

Call Server

Source Field

VS.instantAnsCallUseCount

Source Section

Per SS7 Service Member, Per Media Gateway, Per Channel Group

instantInSvcChannelsCount

Instantaneous Number of Channels In-Service Count

Data Source

Call Server

Source Field

VS.instantInSvcChannelsCount

Source Section

Per SS7 Service Member, Per Media Gateway, Per Channel Group

instantMaintUseCount

Instantaneous Maintenance Use Count: The instantaneous number of channels in use for any reason (generally maintenance) other than customer traffic.

Data Source

Call Server

Source Field

VS.instantMaintUseCount

Source Section

Per SS7 Service Member, Per Media Gateway, Per Channel Group

instantTotalUseCount

Instantaneous Total Use Count The instantaneous number of channels in use by both traffic and maintenance.

Data Source

Call Server

Source Field

VS.instantTotalUseCount

Source Section

Per SS7 Service Member, per Media Gateway, per Channel Group

LRNDAFail

This count is pegged whenever an invalid match occurs when attempting digit analysis on an LRN.

Data Source

Call Server

Source Field

VS.LRNDAFail

Source Section

Per SS7 Service Member, per Media Gateway, per Channel Group

OutCallAns

Outgoing Calls Answered

Data Source

Call Server

Source Field

VS.OutCallAns

Source Section

Per SS7 Service Member, Per Media Gateway, Per Channel Group

OutCallAtt

Outgoing Call Attempts

Data Source

Call Server

Source Field

VS.OutCallAtt

Source Section

Per SS7 Service Member, Per Media Gateway, Per Channel Group

OutCallCotAtt

Outgoing Call Attempts - Continuity Check Attempts

Data Source

Call Server

Source Field

VS.OutCallCotAtt

Source Section

Per CS Service Member, Per Media Gateway, Per Channel Group

OutCallCotDenied

This count shall be pegged upon receipt of an ISUP RELEASE message with a cause value of 41 or 42, indicating that the check of the outgoing circuit is denied due to COT being unsupported or facilities unavailable at the destination exchange. The count is pegged against the channel group containing the span channel on which the outgoing call attempt was made.

Data Source

Call Server

Source Field

VS.OutCallCotDenied

Source Section

Per SS7 Service Member, per Media Gateway, per Channel Group

OutCallCotFail

Outgoing Call Attempts - Failed Continuity Check

Data Source

Call Server

Source Field

VS.OutCallCotFail

Source Section

Per CS Service Member, Per Media Gateway, Per Channel Group

OutCallCotSucc

Outgoing Call Attempts - Successful Continuity Check

Data Source

Call Server

Source Field

VS.OutCallCotSucc

Source Section

Per CS Service Member, Per Media Gateway, Per Channel Group

OutCallFailBearerSetup

Failed Outgoing Call Attempts - Bearer Setup Failure

Data Source

Call Server

Source Field

VS.OutCallFailBearerSetup

Source Section

Per CS Service Member, Per Media Gateway, Per Channel Group

OutCallFailNoANM

Failed Outgoing Attempts - No Answer

Data Source

Call Server

Source Field

VS.OutCallFailNoANM

Source Section

Per CS Service Member, Per Media Gateway, Per Channel Group

outCallFailRelRcvd

Pegged when one of the following messages is received before an ACM is received.Pegged only when the outgoing call attempt fails, and not for intermediate failures for which the attempt may succeed due to a rehunt.

Data Source

Call Server

Source Field

VS.outCallFailRelRcvd

Source Section

Call Setup

OutCallFailUnsupBT

Failed Outgoing Call Attempts - Unsupported Bearer Type

Data Source

Call Server

Source Field

VS.OutCallFailUnSupBT

Source Section

Per CS Service Member, Per Media Gateway, Per Channel Group

OutCallSetupSucc

Successful Outgoing Call Setups

Data Source

Call Server

Source Field

VS.OutCallSetupSucc

Source Section

Per SS7 Service Member, Per Media Gateway, Per Channel Group

OutCcrAtt

This count shall be pegged whenever a Continuity Check Request (CCR) of the outgoing circuit is requested. It is pegged for outgoing continuity check attempts that are initiated after an IAM requested continuity check fails as well as for manually initiated outgoing continuity check attempts.

Data Source

Call Server

Source Field

VS.OutCcrAtt

Source Section

Per SS7 Service Member, per Media Gateway, per Channel Group

OutCcrFail

This count shall be pegged whenever an outgoing circuit has failed a Continuity Check Request (CCR) as determined by T24 timing out.

Data Source

Call Server

Source Field

VS.OutCcrFail

Source Section

Per SS7 Service Member, per Media Gateway, per Channel Group

OutCcrNoLpa

This count shall be pegged whenever an outgoing circuit has failed a Continuity Check Request (CCR) because no Loopback Acknowledgement (LPA) message was received and Tccr timed out. This counts applies to ANSI ISUP only.

Data Source

Call Server

Source Field

VS.OutCcrNoLpa

Source Section

Per SS7 Service Member, per Media Gateway, per Channel Group

OutCcrSucc

This count shall be pegged whenever a Continuity Check Request (CCR) has resulted in a determination of good continuity. This is determined by the MGW reporting receipt of the continuity check tone on the specified CIC.

Data Source

Call Server

Source Field

VS.OutCcrSucc

Source Section

Per SS7 Service Member, per Media Gateway, per Channel Group

peakChanGrpOccRate

This count represents the peak channel group occupancy level for each bearer channel group controlled by the LSS including network (PLMN) and mobile channel groups. The occupancy rate of each channel group is sampled every 10 seconds and the highest detected occupancy level for the reporting interval recorded for each.

Data Source

Call Server

Source Field

VS.peakChanGrpOccRate

Source Section

Channel Group Occupancy

ToneSetupAtt

Call Setup Attempts - Tones

Data Source

Call Server

Source Field

VS.ToneSetupAtt

Source Section

Tones and Announcement

ToneSetupSucc

Successful Call Setup Attempts - Tones

Data Source

Call Server

Source Field

VS.ToneSetupSucc

Source Section

Per CS Service Member, Per Media Gateway, Per Channel Group

totalChanEquipNotIS

This count represents the total number of CICs with the state of "Equipped - Not in Service" for ISUP, BICC, RANAP and BSSAP channel groups. It is sampled on a 100 second scan basis and the reported as the average value seen over the reporting period. This is for CICs that have not yet been put into service and does not include the OOS and blocking (maintenance & hardware) states.

Data Source

Call Server

Source Field

VS.totalChanEquipNotIS

Source Section

Traffic: CG Occupancy

CPU_Core Primitive Calculations

The following is a list of primitive calculations for the CPU_Core entity.

GRAPHmultiLineSeparator

Special Control Field for Multi-Line Graphs

Calculation

```
""
```

NUMDAYS

of days in Report

Calculation

```
DAYSINREPORT()
```

NUMHOURS

of hours in Summation Data

CPU_Core Peg Counts

The following is a list of peg counts for the CPU_Core entity.

avePerCoreCpuUsage

Represents the average CPU utilization for each CPU core.

Data Source

Call Server

Source Field

VS.avePerCoreCpuUsage

Source Section

Capacity Engineering

peakPerCoreCpuUsage

Represents the peak CPU utilization (i.e. 100 - idle task) for each CPU core.

Data Source

Call Server

Source Field

VS.peakPerCoreCpuUsage

Source Section

Capacity Engineering

Disk Primitive Calculations

The following is a list of primitive calculations for the Disk entity.

GRAPHmultiLineSeparator

Special Control Field for Multi-Line Graphs

Calculation

```
""
```

NUMDAYS

of days in Report

Calculation

```
DAYSINREPORT()
```

NUMHOURS

of hours in Summation Data

Calculation

Disk Peg Counts

The following is a list of peg counts for the Disk entity.

Data_Interval

Data interval for the Call Server data collection in seconds. It is taken from "duration" value of the relevant <granPeriod> tag in the Call Server XML data file.

Data Source

Call Server

Source Field

<granPeriod> tag "duration"

diskIOReadRate

The disk I/O rate as the average blocks read per second.

Data Source

Call Server

Source Field

VS.diskIOReadRate

Source Section

Disk I/O Rate

diskIOWriteRate

The disk I/O rate as the average blocks written per second.

Data Source

Call Server

Source Field

VS.diskIOWriteRate

Source Section

Disk I/O Rate

ECType Primitive Calculations

The following is a list of primitive calculations for the ECType entity.

GRAPHmultiLineSeparator

Special Control Field for Multi-Line Graphs

Calculation

```
""
```

NUMDAYS

of days in Report

Calculation

```
DAYSINREPORT()
```

Updated: 2009-06-23

NUMHOURS

of hours in Summation Data

ECType Peg Counts

The following is a list of peg counts for the ECType entity.

FailLRROrigEmergency

Pegged each time a Location Request Response message (Location Report (UMTS) and Perform Location Response (GSM)) is received at the 3G-MSC with a cause value, triggered by a test or normal emergency call origination.

Data Source

Call Server

Source Field

VS.FailLRROrigEmergency

Source Section

E911

FailSLROrigEmergency

Pegged each time a MAP Subscriber Location Report Return Error message is received at 3G-MSC, triggered by a test or normal emergency call origination.

Data Source

Call Server

Source Field

VS.FailSLROrigEmergency

Source Section

E911

FailSLRRelEmergency

Pegged each time a MAP Subscriber Location Report Return Error message is received at 3G-MSC, triggered by the release of a test or normal emergency call.

Data Source

Call Server

Source Field

VS.FailSLRRelEmergency

Source Section

E911

LocReqOrigEmergency

Pegged each time a Location Request message (Location Reporting Control (UMTS) or Perform Location Request (GSM)) is sent from the 3G-MSC, triggered by a test or normal emergency call origination.

Data Source

Call Server

Source Field

VS.LocReqOrigEmergency

Source Section

E911

ReqSLROrigEmergency

Pegged each time a MAP Subscriber Location Report message is sent from the 3G-MSC, triggered by a test or normal emergency call origination.

Data Source

Call Server

Source Field

VS.ReqSLROrigEmergency

Source Section

E911

ReqSLRRelEmergency

Pegged each time a MAP Subscriber Location Report message is sent from the 3GMSC, triggered by the release of a test or normal emergency call.

Data Source

Call Server

Source Field

VS.ReqSLRRelEmergency

Source Section

E911

SuccLRROrigEmergency

Pegged for each SUCCESS Location Request Response message (Location Report (UMTS) and Perform Location Response (GSM)) received at the 3G-MSC, triggered by a test or normal emergency call origination.

Data Source

Call Server

Source Field

VS.SuccLRROrigEmergency

Source Section

E911

SuccSLROrigEmergency

Pegged each time a SUCCESS MAP Subscriber Location Report Return Result message is received at the 3G-MSC, triggered by a test or normal emergency call origination.

Data Source

Call Server

Source Field

VS.SuccSLROrigEmergency

Source Section

E911

SuccSLRRelEmergency

Pegged each time a SUCCESS MAP Subscriber Location Report Return Result message is received at the 3G-MSC, triggered by the release of a test or normal emergency call.

Data Source

Call Server

Source Field

VS.SuccSLRRelEmergency

Source Section

E911

TimeoutFailLRROrigEmergency

Pegged each time the 3G-MSC times-out waiting for the Location Request Response message (Location Report (UMTS) and Perform Location Response (GSM)) to arrive, triggered by a test or normal emergency call origination.

Data Source

Call Server

Source Field

VS.TimeoutFailLRROrigEmergency

Source Section

E911

TimeoutSLROrigEmergency

Pegged each time 3G-MSC is timed out on waiting for the MAP Subscriber Location Report Return Result message to arrive, triggered by a test or normal emergency call origination.

Data Source

Call Server

Source Field

VS.TimeoutSLROrigEmergency

Source Section

E911

TimeoutSLRRelEmergency

Pegged each time 3G-MSC is timed out on waiting for the MAP Subscriber Location Report Return Result message to arrive, triggered by the release of a test or normal emergency call.

Data Source

Call Server

Source Field

VS.TimeoutSLRRelEmergency

Source Section

E911

FileSystem Primitive Calculations

The following is a list of primitive calculations for the FileSystem entity.

GRAPHmultiLineSeparator

Special Control Field for Multi-Line Graphs

Calculation

```
""
```

NUMDAYS

of days in Report

Calculation

```
DAYSINREPORT()
```

NUMHOURS

of hours in Summation Data

Calculation

FileSystem Peg Counts

The following is a list of peg counts for the FileSystem entity.

Data_Interval

Data interval for the Call Server data collection in seconds. It is taken from "duration" value of the relevant <granPeriod> tag in the Call Server XML data file.

Data Source

Call Server

Source Field

<granPeriod> tag "duration"

fileSysUsage

File System Utilization %. The file system utilization shall be checked on 5 minute interval, the samples averaged across the reporting interval and the result reported in this count.

Data Source

Call Server

Source Field

VS.fileSysUsage

Source Section

Disk File System Utilization

GSM_Cell Primitive Calculations

The following is a list of primitive calculations for the GSM_Cell entity.

GRAPHmultiLineSeparator

Special Control Field for Multi-Line Graphs

Calculation

```
""
```

IncomingExternalIntraMSC_HandoverSuccessRate

Incoming External Intra-MSC Handover Success Rate %

Calculation

```
succIncomingExternalIntraMSCHDOs * 100.0 / attIncomingExternalIntraMSCHDOs
```

NUMDAYS

of days in Report

Calculation

```
DAYSINREPORT()
```

NUMHOURS

of hours in Summation Data

Calculation

OutgoingExternalIntraMSC_HandoverSuccessRate

Outgoing External Intra-MSC Handover Success Rate %

Calculation

```
succOutgoingExternalIntraMSCHDOs * 100.0 / attOutgoingExternalIntraMSCHDOs
```

GSM_Cell Peg Counts

The following is a list of peg counts for the GSM_Cell entity.

attIncomingExternalIntraMSCHDOs

Counter moved to "T_CELL_RNC" entity fr 4.1.7.0.0. Attempted incoming External intra-MSC Handovers

Data Source

Call Server

Source Field

attIncomingExternalIntraMSCHDOs

Source Section

MSC HandOver (HDO) (GSM)

attIncomingInterMSCHDOs

Counter moved to "T_CELL_RNC" entity fr 4.1.7.0.0. Attempted incoming inter-MSC Handovers

Data Source

Call Server

Source Field

attIncomingInterMSCHDOs

Source Section

MSC HandOver (HDO) (GSM)

attOutgoingExternalIntraMSCHDOs

Counter moved to "T_CELL_RNC" entity fr 4.1.7.0.0. Attempted outgoing External intra-MSC Handovers

Data Source

Call Server

Source Field

attOutgoingExternalIntraMSCHDOs

Source Section

MSC HandOver (HDO) (GSM)

attSubsequentInterMSCHDOsMSCa

Counter moved to "T_CELL_RNC" entity fr 4.1.7.0.0. Attempted subsequent inter-MSC Handovers (back to MSCa)

Data Source

Call Server

Source Field

attSubsequentInterMSCHDOsMSCa

Source Section

MSC HandOver (HDO) (GSM)

attSubsequentInterMSCHDOsMSCc

Counter moved to "T_CELL_RNC" entity fr 4.1.7.0.0. Attempted subsequent inter-MSC Handovers (to MSCc)

Data Source

Call Server

Source Field

attSubsequentInterMSCHDOsMSCc

Source Section

MSC HandOver (HDO) (GSM)

Data_Interval

Data interval for the Call Server data collection in seconds. It is taken from "duration" value of the relevant <granPeriod> tag in the Call Server XML data file.

Data Source

Call Server

Source Field

<granPeriod> tag "duration"

mobileOrigDropBeforeAlert_Cell

This count shall be pegged when a mobile originated call attempt (including emergency calls) is dropped or fails for a locally generated reason related to a system error after the bearer channel is allocated but before alerting begins. This includes bearer path setup failure, signalling path failure, or any abnormal release NOT resulting from a message received from the RNC or BSC. This count shall be pegged no more than once for each mobile originated call attempt and shall not be pegged for misdialed numbers, originating mobile hangups or any other originating subscriber related actions.

Data Source

Call Server

Source Field

VS.mobileOrigDropBeforeAlert

Source Section

Call Setup (Cell)

mobileOrigDropBeforeAns_Cell

This count shall be pegged when a mobile originated call attempt (including emergency calls) is dropped or fails for a locally generated reason related to a system error after alerting begins but before answer. This includes bearer path failure, signalling path failure, or any abnormal release NOT resulting from a message received from the RNC or BSC. This count shall be pegged no more than once for each mobile originated call attempt and shall not be pegged for misdialed numbers, originating mobile hangups or any other subscriber related actions.

Data Source

Call Server

Source Field

VS.mobileOrigDropBeforeAns

Source Section

Call Setup (Cell)

mobileOrigDroppedAfterAns_Cell

This count is pegged when a mobile originated call (including mobile emergency calls) is dropped after answer. It is pegged if an internal 3GMSC system error bearer path failure or signalling path failure (including SCCP failure) results in a stable call being dropped. This count is NOT pegged due the receipt of a RELEASE / CLEAR REQUEST message from the RNC / BSS; a separate counts exists for that event. This count is pegged no more than once for each mobile originated call.

Data Source

Call Server

Source Field

VS.mobileOrigDroppedAfterAns

Source Section

Call Setup (Cell)

mobileTermDropBeforeAlert_Cell

This count shall be pegged when a mobile terminated call attempt is dropped or fails for a locally generated reason related to a system error after the bearer channel is allocated but before alerting begins. This includes bearer path setup failure, signalling path failure or any abnormal release message NOT resulting from a message received from the RNC or BSC. This count shall be pegged no more than once for each mobile terminated call attempt and shall not be pegged for misdialed numbers or any other subscriber related actions.

Data Source

Call Server

Source Field

VS.mobileTermDropBeforeAlert

Source Section

Call Setup (Cell)

mobileTermDropBeforeAns_Cell

This count shall be pegged when a mobile terminated call attempt is dropped or fails for a locally generated reason related to a system error after alerting begins but before answer. This includes bearer path failure, signalling path failure or any abnormal release message NOT resulting from a message received from the RNC or BSC. This count shall be pegged no more than once for each mobile originated call attempt and shall not be pegged for misdialed numbers or any other subscriber related actions.

Data Source

Call Server

Source Field

VS.mobileTermDropBeforeAns

Source Section

Call Setup (Cell)

mobileTermDroppedAfterAns_Cell

This count is pegged when a mobile terminated call (including mobile emergency calls) is dropped after answer. It is pegged if an internal 3GMSC system error bearer path failure or signalling path failure (including SCCP failure) results in a stable call being dropped. This count is NOT be pegged due the receipt of a RELEASE / CLEAR REQUEST message from the RNC / BSS; a separate count exists for that event. This count is pegged no more than once for each mobile terminated call.

Data Source

Call Server

Source Field

VS.mobileTermDroppedAfterAns

Source Section

Call Setup (Cell)

succIncomingExternalIntraMSCHDOs

Counter moved to "T_CELL_RNC" entity fr 4.1.7.0.0. Successful incoming External intra-MSC Handovers

Data Source

Call Server

Source Field

succIncomingExternalIntraMSCHDOs

Source Section

MSC HandOver (HDO) (GSM)

succIncomingInterMSCHDOS

Counter moved to "T_CELL_RNC" entity fr 4.1.7.0.0. Successful incoming inter-MSC Handovers

Data Source

Call Server

Source Field

succIncomingInterMSCHDOS

Source Section

MSC HandOver (HDO) (GSM)

succOutgoingExternalIntraMSCHDOs

Counter moved to "T_CELL_RNC" entity fr 4.1.7.0.0. Successful outgoing External intra-MSC Handovers

Data Source

Call Server

Source Field

succOutgoingExternalIntraMSCHDOs

Source Section

MSC HandOver (HDO) (GSM)

succSubsequentInterMSCHDOsMSCa

Counter moved to "T_CELL_RNC" entity fr 4.1.7.0.0. Successful subsequent inter-MSC Handovers (back to MSCa)

Data Source

Call Server

Source Field

succSubsequentInterMSCHDOsMSCa

Source Section

MSC HandOver (HDO) (GSM)

succSubsequentInterMSCHDOsMSCc

Counter moved to "T_CELL_RNC" entity fr 4.1.7.0.0. Successful subsequent inter-MSC Handovers (to MSCc)

Data Source

Call Server

Source Field

succSubsequentInterMSCHDOsMSCc

Source Section

MSC HandOver (HDO) (GSM)

GSM_Target Primitive Calculations

The following is a list of primitive calculations for the GSM_Target entity.

GRAPHmultiLineSeparator

Special Control Field for Multi-Line Graphs

Calculation

```
""
```

NUMDAYS

of days in Report

Calculation

```
DAYSINREPORT()
```

NUMHOURS

of hours in Summation Data

Calculation

GSM_Target Peg Counts

The following is a list of peg counts for the GSM_Target entity.

attOutgoingInterMSCHDOs

Counter moved to "T_CELL_RNC" entity fr 4.1.7.0.0. Attempted outgoing inter-MSC Handovers

Data Source

Call Server

Source Field

attOutgoingInterMSCHDOs

Source Section

MSC HandOver (HDO) (GSM) per Target (GSM)

Data_Interval

Data interval for the Call Server data collection in seconds. It is taken from "duration" value of the relevant <granPeriod> tag in the Call Server XML data file.

Data Source

Call Server

Source Field

<granPeriod> tag "duration"

succOutgoingInterMSCHDOs

Counter moved to "T_CELL_RNC" entity fr 4.1.7.0.0. Successful outgoing inter-MSC Handovers

Data Source

Call Server

Source Field

succOutgoingInterMSCHDOs

Source Section

MSC HandOver (HDO) (GSM) per Target (GSM)

HO_Cause Primitive Calculations

The following is a list of primitive calculations for the HO_Cause entity.

GRAPHmultiLineSeparator

Special Control Field for Multi-Line Graphs

Calculation

```
""
```

NUMDAYS

of days in Report

Calculation

```
DAYSINREPORT()
```

NUMHOURS

of hours in Summation Data

Calculation

HO_Cause Peg Counts

The following is a list of peg counts for the HO_Cause entity.

Data_Interval

Data interval for the Call Server data collection in seconds. It is taken from "duration" value of the relevant <granPeriod> tag in the Call Server XML data file.

Data Source

Call Server

Source Field

<granPeriod> tag "duration"

externalHOPerCause_GSM

GSM External Handovers per Cause

Data Source

Call Server

Source Field

externalHOPerCause

Source Section

HandOver (HO) per Cause Value (GSM)

externalHOPerCause_UMTS

UMTS External Handovers per Cause

Data Source

Call Server

Source Field

externalHOPerCause

Source Section

HandOver (HO) per Cause Value (UMTS)

HONPool Primitive Calculations

The following is a list of primitive calculations for the HONPool entity.

GRAPHmultiLineSeparator

Special Control Field for Multi-Line Graphs

Calculation

```
""
```

NUMDAYS

of days in Report

Calculation

```
DAYSINREPORT()
```

Updated: 2009-06-23

NUMHOURS

of hours in Summation Data

HONPool Peg Counts

The following is a list of peg counts for the HONPool entity.

peakHONUsagePerPool

Represents the peak number of HO Numbers in use for each HON pool in the reporting period. The number HONs in use is sampled every 10 seconds. The value of this count is the highest of these in-use values seen during the reporting period.

Data Source

Call Server

Source Field

VS.peakHONUsagePerPool

Source Section

MSRN / HON Pooling

regHONoverflow

Pegged for overflows from each regional HON pool (1-255) to the default system HON pool (0) .

Data Source

Call Server

Source Field

VS.regHONoverflow

Source Section

MSRN / HON Pooling

totalHONPerPool

This count represent the total number of HO Numbers in each HON pool.

Data Source

Call Server

Source Field

VS.totalHONPerPool

Source Section

Handover

HSL Primitive Calculations

The following is a list of primitive calculations for the HSL entity.

GRAPHmultiLineSeparator

Special Control Field for Multi-Line Graphs

Calculation

```
""
```

NUMDAYS

of days in Report

Calculation

```
DAYSINREPORT()
```

NUMHOURS

of hours in Summation Data

Calculation

HSL Peg Counts

The following is a list of peg counts for the HSL entity.

Data_Interval

Data interval for the Call Server data collection in seconds. It is taken from "duration" value of the relevant <granPeriod> tag in the Call Server XML data file.

Data Source

Call Server

Source Field

<granPeriod> tag "duration"

MTP3MsgOctectsReceived

The number of octets associated with MTP3 messages received from the far-end excluding additional octets added by the SAAL and ATM layers. GR-2878 CORE Reference: R4-114-4

Data Source

Call Server

Source Field

VS.MTP3MsgOctectsReceived

Source Section

SS7

MTP3MsgOctectsTransmitted

The number of octets comprising MTP3 messages submitted to the SAAL for transmission to the far end excluding additional octets added by the SAAL and ATM layers. Note that SSCOP retransmissions are not included in this count. GR-2878 CORE Reference: R4-114-3

Data Source

Call Server

Source Field

VS.MTP3MsgOctectsTransmitted

Source Section

SS7

MTP3MsgOctetsReTransmitted

SS7 MTP3 Message Octets Retransmitted. The number of octets comprising MTP Level 3 (MTP3) messages submitted to the SAAL for retransmission to the far end was necessary.

Data Source

Call Server

Source Field

VS.MTP3MsgOctetsReTransmitted

Source Section

SS7

MTP3MsgsReceived

The number of MTP3 messages received from the far end. GR-2878 CORE Reference: R4-114-2

Data Source

Call Server

Source Field

VS.MTP3MsgsReceived

Source Section

SS7

MTP3MsgsReTransmitted

SS7 MTP3 Messages Retransmitted. The number of MTP Level 3 (MTP3) messages submitted to the SAAL for retransmission to the far end was necessary.

Data Source

Call Server

Source Field

VS.MTP3MsgsReTransmitted

Source Section

SS7

MTP3MsgsTransmitted

The number of MTP Level 3 (MTP3) messages submitted to the SAAL for transmission to the far end including those for which retransmissions of SSCOP SD PDUs may have been necessary. Note that SSCOP retransmissions are not included in this count. GR-2878 CORE Reference: R4-114-1

Data Source

Call Server

Source Field

VS.MTP3MsgsTransmitted

Source Section

SS7

SAALInSrvc

The number of seconds the link is regarded in service (at level 2) by SAAL LM based on its perception of the link's SCCF alignment status. GR-2878 CORE Reference: R4-117-1

Data Source

Call Server

Source Field

VS.SAALInSrvc

Source Section

SS7

SLAlignmentFailure

The number of times Layer Management (LM) received a MAAL-REPORT indication signal conveying "Alignment Not Successful".GR-2878 CORE Reference: R4-117-2

Data Source

Call Server

Source Field

VS.SLAlignmentFailure

Source Section

SS7

SSCOP_SD_PDU_OctRcvd

The number of octets associated with SSCOP SD PDUs received. GR-2878 CORE Reference: R4-117-8

Data Source

Call Server

Source Field

VS.SSCOP_SD_PDU_OctRcvd

Source Section

SS7

SSCOP_SD_PDU_OctReTx

The number of octets associated with SSCOP SD PDUs retransmitted. GR-2878 CORE Reference: R4-117-6

Data Source

Call Server

Source Field

VS.SSCOP_SD_PDU_OctReTx

Source Section

SS7

SSCOP_SD_PDU_OctTx

The number of octets associated with SSCOP SD PDUs transmitted (including retransmissions). GR-2878 CORE Reference: R4-117-5

Data Source

Call Server

Source Field

VS.SSCOP_SD_PDU_OctTx

Source Section

SS7

SSCOP_SD_PDU_Rcvd

The number of SSCOP SD PDUs that were received. GR-2878 CORE Reference: R4-117-7

Data Source

Call Server

Source Field

VS.SSCOP_SD_PDU_Rcvd

Source Section

SS7

SSCOP_SD_PDU_ReTx

The number of SSCOP SD PDUs that were retransmitted based on an accumulated count of such retransmissions as conveyed to LM in MAA-ERROR indication signals of type "V" (SD loss) sent from SSCOP. GR-2878 CORE Reference: R4-117-4

Data Source

Call Server

Source Field

VS.SSCOP_SD_PDU_ReTx

Source Section

SS7

SSCOP_SD_PDU_Tx

The number of SSCOP Sequenced Data (SD) PDUs that were transmitted (including retransmissions). GR-2878 CORE Reference: R4-117-3

Data Source

Call Server

Source Field

VS.SSCOP_SD_PDU_Tx

Source Section

SS7

TotSSCOP_PDU_OctRcvd

Total SSCOP PDU Octets Received:The number of octets associated with SSCOP PDUs of all types that were received. (including SD PDU retransmissions). GR-2878 CORE Reference: R4-117-12

Data Source

Call Server

Source Field

VS.TotSSCOP_PDU_OctRcvd

Source Section

SS7

TotSSCOP_PDU_OctTx

Total SSCOP PDU Octets Transmitted: The number of octets associated with SSCOP PDUs of all types that were transmitted (which may include SDPDU retransmissions). GR-2878 CORE Reference: R4-117-11

Data Source

Call Server

Source Field

VS.TotSSCOP_PDU_OctTx

Source Section

SS7

TotSSCOP_PDU_Rcvd

Total SSCOP PDUs Received: The number of SSCOP PDUs of all types that were received. (including SD PDU retransmissions). GR-2878 CORE Reference: R4-117-10

Data Source

Call Server

Source Field

VS.TotSSCOP_PDU_Rcvd

Source Section

SS7

TotSSCOP_PDU_Tx

Total SSCOP PDUs Transmitted:The number of SSCOP PDUs of all types that were transmitted (including SD PDU retransmissions). GR-2878 CORE Reference: R4-117-9

Data Source

Call Server

Source Field

VS.TotSSCOP_PDU_Tx

Source Section

SS7

IN_Service Primitive Calculations

The following is a list of primitive calculations for the IN_Service entity.

GRAPHmultiLineSeparator

Special Control Field for Multi-Line Graphs

Calculation

```
""
```

NUMDAYS

of days in Report

Calculation

```
DAYSINREPORT()
```

NUMHOURS

of hours in Summation Data

Calculation

IN_Service Peg Counts

The following is a list of peg counts for the IN_Service entity.

Data_Interval

Data interval for the Call Server data collection in seconds. It is taken from "duration" value of the relevant <granPeriod> tag in the Call Server XML data file.

Data Source

Call Server

Source Field

<granPeriod> tag "duration"

INestTempConnReq

Pegged whenever the Establish Temporary Connection operation request is received from the IN service.

Data Source

Call Server

Source Field

VS.INestTempConnReq

Source Section

IN Query, CAMEL

INestTempConnReqRefused

An ETC request is refused for certain situations such as the call is on HOLD, MPTY or CSD and is not a failure, it is just that the ETC request cannot proceed.

Data Source

Call Server

Source Field

VS.INestTempConnReqRefused

Source Section

IN Query, CAMEL

INestTempConnSucc

Pegged each time the request to establish a temporary IN connection is successfully completed.

Data Source

Call Server

Source Field

VS.INestTempConnSucc

Source Section

IN Query, CAMEL

INMGWToneSetupAtt

This count is pegged for each tone setup request including the CAMEL warning tone to a Media Gateway (MGW) related to an IN call attempt. It is possible to peg this count more than once per IN call.

Data Source

Call Server

Source Field

VS.INMGWToneSetupAtt

Source Section

Capacity Engineering

INMRSAnnSetupAtt

This count is pegged for each announcement or 'prompt and collect' setup request to a Media Resource Server (MRS) related to an IN call attempt. It is possible to peg this count more than once per IN call.

Data Source

Call Server

Source Field

VS.INMRSAnnSetupAtt

Source Section

Capacity Engineering

INMRSToneSetupAtt

This count is pegged for each tone setup request to a Media Resource Server (MRS) related to an IN call attempt. It is possible to peg this count more than once per IN call.

Data Source

Call Server

Source Field

VS.INMRSToneSetupAtt

Source Section

Capacity Engineering

INSCPQueryPerServiceIdAtt

This count is pegged for each Intelligent Network Server - SCP query attempt transactions that were received at the Intelligent Network Server from a Call Server. The Service ID is one of the mandatory parameters sent in a CAMEL query and indicates which feature the SCP query was for e.g. Pre-Pay custom Ringback tone etc.

Data Source

Call Server

Source Field

VS.INSCPQueryPerServiceIdAtt

Source Section

Capacity Engineering

IWF_GW_CS Primitive Calculations

The following is a list of primitive calculations for the IWF_GW_CS entity.

GRAPHmultiLineSeparator

Special Control Field for Multi-Line Graphs

Calculation

```
""
```

NUMDAYS

of days in Report

Calculation

```
DAYSINREPORT()
```

Updated: 2009-06-23

NUMHOURS

of hours in Summation Data

Calculation

IWF_GW_CS Peg Counts

The following is a list of peg counts for the IWF_GW_CS entity.

CSDCallSyncFailure

This count is pegged when a CSD call is abnormally released due to a synchronization failure i.e the MSC clears the call after the IWF sends H.248 error code 910.

Data Source

Call Server

Source Field

VS.CSDCallSyncFailure

Source Section

Circuit Switched Data

Data_Interval

Data interval for the Call Server data collection in seconds. It is taken from "duration" value of the relevant <granPeriod> tag in the Call Server XML data file.

Data Source

Call Server

Source Field

<granPeriod> tag "duration"

LAC Primitive Calculations

The following is a list of primitive calculations for the LAC entity.

GRAPHmultiLineSeparator

Special Control Field for Multi-Line Graphs

Calculation

```
""
```

NUMDAYS

of days in Report

Calculation

```
DAYSINREPORT()
```

NUMHOURS

of hours in Summation Data

Calculation

LAC Peg Counts

The following is a list of peg counts for the LAC entity.

attPageReqsPerLocationArea

The number of page requests (these are counted as attempts) per Location Area . Pegged upon transmission of a MAP_PAGE service request.

Data Source

Call Server

Source Field

attPageReqsPerLocationArea

Source Section

Paging

succPageReqsPerLocationArea

Successful Page Requests per Location Area.

Data Source

Call Server

Source Field

succPageReqsPerLocationArea

Source Section

Paging

LAC_BSC Primitive Calculations

The following is a list of primitive calculations for the LAC_BSC entity.

GRAPHmultiLineSeparator

Special Control Field for Multi-Line Graphs

Calculation

```
""
```

NUMDAYS

of days in Report

Calculation

```
DAYSINREPORT()
```

NUMHOURS

of hours in Summation Data

LAC_BSC_BearerType Primitive Calculations

The following is a list of primitive calculations for the LAC_BSC_BearerType entity.

GRAPHmultiLineSeparator

Special Control Field for Multi-Line Graphs

Calculation

```
""
```

NUMDAYS

of days in Report

Calculation

```
DAYSINREPORT()
```

NUMHOURS

of hours in Summation Data

LAC_BSC_BearerType Peg Counts

The following is a list of peg counts for the LAC_BSC_BearerType entity.

throttledFirstPages4RANoverload

Pegged when the MSC decides not to page a mobile terminating call / SMS/ LCS/ CAMEL/SS attempt due to per-RNC/BSC GUI control set to 'Reduce Paging by a provisioned %'. When a BSC/RNC reports congestion via OVERLOAD message or when the Service Provider provisions it on the MSC, the MSC will throttle paging requests for certain types of pages depending on the level of congestion e.g. for any first page based on a provisioned percentage. Note: Bearer Call Type of SMS, SPCH, and No BSG shall be supported for this count. SPCH in this case shall include speech, fax and circuit switched data. NO BSG shall include mobile terminating CAMEL, unstructured supplementary service data, and location requests. Non-emergency only mobile terminating location requests cause these throttling PM counts to be pegged -- emergency ones don't, as they are not throttled. (BSC)

Data Source

Call Server

Source Field

VS.throttledFirstPages4RANoverload

Source Section

Throttling

throttledSubsPages4RANoverload

Pegged when the MSC decides not to page a mobile terminating call / SMS/ LCS/ CAMEL/SS attempt due to per-RNC/BSC GUI control set to 'Inhibit paging retries' or 'Reduce Paging by a provisioned %'. When a BSC/RNC reports congestion via OVERLOAD message or when the Service Provider provisions it on the MSC, the MSC will throttle paging requests for certain types of pages depending on the level of congestion e.g. for inhibited paging retries or for a subsequent page based on a provisioned percentage. Note: Bearer Call Type of SMS, SPCH, and No BSG shall be supported for this count. SPCH in this case shall include speech, fax and circuit switched data. NO BSG shall include mobile terminating CAMEL, unstructured supplementary service data, and location requests. Non-emergency only mobile terminating location requests cause these throttling PM counts to be pegged -- emergency ones don't, as they are not throttled. (BSC)

Data Source

Call Server

Source Field

VS.throttledSubsPages4RANoverload

Source Section

Throttling

LAC_Paging Primitive Calculations

The following is a list of primitive calculations for the LAC_Paging entity.

attPageReqsPerLocationArea

Attempted page requests per Location Area at VLR

Calculation

```
NullValue(sum(bridgeList(StringToInt(LocalKey), ServiceMember.PLMN.LAC,
StringToInt(LocalKey)), attPageReqsPerLocationArea),
attPageReqsPerLocationArea_M5)
```

GRAPHmultiLineSeparator

Special Control Field for Multi-Line Graphs

Calculation

```
""
```

LocationAreaPagingSuccessRate

Location Area Paging Success Rate %

Calculation

```
succPageReqsPerLocationArea * 100.0 / attPageReqsPerLocationArea
```

NUMDAYS

of days in Report

Calculation

```
DAYSINREPORT()
```

NUMHOURS

of hours in Summation Data

Calculation

succPageReqsPerLocationArea

Successful page requests per Location Area at VLR

Calculation

```
NullValue(sum(bridgeList(StringToInt(LocalKey), ServiceMember.PLMN.LAC,
StringToInt(LocalKey)), succPageReqsPerLocationArea),
succPageReqsPerLocationArea_M5)
```

LAC_Paging Peg Counts

The following is a list of peg counts for the LAC_Paging entity.

Data_Interval

Data interval for the Call Server data collection in seconds. It is taken from "duration" value of the relevant <granPeriod> tag in the Call Server XML data file.

Data Source

Call Server

Source Field

<granPeriod> tag "duration"

LURejectsCCLocAreaNotAllowed

The number of Location Area Rejects provided to the MS because the MS was in a restricted LA. This count is pegged on a per Location Area basis.

Data Source

Call Server

Source Field

VS.LURejectsCCLocAreaNotAllowed

Source Section

Regional Zone Subscription

LURejectsRZSCCLocAreaNotAllowed

The number of Location Area Rejects provided to the MS because the MS was in a restricted LA for Regional Zone Subscription. This count is pegged on a per Location Area basis. This count is applicable when the Regional Zone Subscription feature is active.

Data Source

Call Server

Source Field

VS.LURejectsRZSCCLocAreaNotAllowed

Source Section

Regional Zone Subscription

LAC_PG_BearerType Primitive Calculations

The following is a list of primitive calculations for the LAC_PG_BearerType entity.

GRAPHmultiLineSeparator

Special Control Field for Multi-Line Graphs

Calculation

```
""
```

NUMDAYS

of days in Report

Calculation

```
DAYSINREPORT()
```

NUMHOURS

of hours in Summation Data

LAC_PG_BearerType Peg Counts

The following is a list of peg counts for the LAC_PG_BearerType entity.

att2LACPageReqConfmdLA

The page requests attempted on the 'Confirmed LAI' out of those page requests initiated on 2 LACs. The number of page requests (these are counted as attempts) attempted on 2 Location Areas (and not flood paged). It is pegged upon the first transmission of two MAP_PAGE service requests. (TS 52.402 - B.5.1.5). It is not pegged again on a subsequent page attempt (e.g. in case of multiple page attempts after the first has no page response). The measurement includes the Confirmed LAC.

Data Source

Call Server

Source Field

VS.att2LACPageReqConfmdLA

Source Section

Paging

att2LACPageReqLastLA

The number of page requests attempted on the 'Last Known LAI' out of those page requests initiated on 2 LACs. The number of page requests (these are counted as attempts) attempted on 2 Location Areas (and not flood paged). It is pegged upon the first transmission of two MAP_PAGE service requests. (TS 52.402 - B.5.1.5). It is not pegged again on a subsequent page attempt (e.g. in case of multiple page attempts after the first has no page response). The measurement includes the Last Known LAC.

Data Source

Call Server

Source Field

VS.att2LACPageReqLastLA

Source Section

Paging

succ2LACPageReqsConfmdLA

The number of successful page requests on the 'Confirmed LAI' out of those page requests initiated on 2 LACs. It is pegged upon receipt of a MAP_PAGE service confirmation without a "user error" parameter value. It is pegged on a successful page response either after a 1st page attempt or a subsequent page attempt. (TS 52.402 - B.5.1.6). The measurement includes the Confirmed LAC.

Data Source

Call Server

Source Field

VS.succ2LACPageReqsConfmdLA

Source Section

Paging

succ2LACPageReqsLastLA

The number of successful page requests on the 'Last Known LAI' out of those page requests initiated on 2 LACs. It is pegged upon receipt of a MAP_PAGE service confirmation without a "user error" parameter value. It is pegged on a successful page response either after a 1st page attempt or a subsequent page attempt. (TS 52.402 - B.5.1.6). The measurement includes the Last Known LAC.

Data Source

Call Server

Source Field

VS.succ2LACPageReqsLastLA

Source Section

Paging

SuccOther2LACPageReqConfmdLA

The number of pseudo-unsuccessful page responses on the 'Confirmed LAI' out of those page requests initiated on 2 LACs due to successful page response on the other LAI, the 'Last Known LAI'. The measurement includes the Confirmed LAC.

Data Source

Call Server

Source Field

VS.SuccOther2LACPageReqConfmdLA

Source Section

Paging

SuccOther2LACPageReqLastLA

The number of pseudo-unsuccessful page responses on the 'Last Known LAI' out of those page requests initiated on 2 LACs due to successful page response on the other LAI, the 'Confirmed LAI'. The measurement includes the Last Known LAC.

Data Source

Call Server

Source Field

VS.SuccOther2LACPageReqLastLA

Source Section

Paging

LAC_RNC Primitive Calculations

The following is a list of primitive calculations for the LAC_RNC entity.

GRAPHmultiLineSeparator

Special Control Field for Multi-Line Graphs

Calculation

```
""
```

NUMDAYS

of days in Report

Calculation

```
DAYSINREPORT()
```

NUMHOURS

of hours in Summation Data

LAC_RNC_BearerType Primitive Calculations

The following is a list of primitive calculations for the LAC_RNC_BearerType entity.

GRAPHmultiLineSeparator

Special Control Field for Multi-Line Graphs

Calculation

```
""
```

NUMDAYS

of days in Report

Calculation

```
DAYSINREPORT()
```

NUMHOURS

of hours in Summation Data

LAC_RNC_BearerType Peg Counts

The following is a list of peg counts for the LAC_RNC_BearerType entity.

throttledFirstPages4RANoverload

Pegged when the MSC decides not to page a mobile terminating call / SMS/ LCS/ CAMEL/SS attempt due to per-RNC/BSC GUI control set to 'Reduce Paging by a provisioned %'. When a BSC/RNC reports congestion via OVERLOAD message or when the Service Provider provisions it on the MSC, the MSC will throttle paging requests for certain types of pages depending on the level of congestion e.g. for any first page based on a provisioned percentage. Note: Bearer Call Type of SMS, SPCH, and No BSG shall be supported for this count. SPCH in this case shall include speech, fax and circuit switched data. NO BSG shall include mobile terminating CAMEL, unstructured supplementary service data, and location requests. Non-emergency only mobile terminating location requests cause these throttling PM counts to be pegged -- emergency ones don't, as they are not throttled. (RNC)

Data Source

Call Server

Source Field

VS.throttledFirstPages4RANoverload

Source Section

Throttling

throttledSubsPages4RANoverload

Pegged when the MSC decides not to page a mobile terminating call / SMS/ LCS/ CAMEL/SS attempt due to per-RNC/BSC GUI control set to 'Inhibit paging retries' or 'Reduce Paging by a provisioned %'. When a BSC/RNC reports congestion via OVERLOAD message or when the Service Provider provisions it on the MSC, the MSC will throttle paging requests for certain types of pages depending on the level of congestion e.g. for inhibited paging retries or for a subsequent page based on a provisioned percentage. Note: Bearer Call Type of SMS, SPCH, and No BSG shall be supported for this count. SPCH in this case shall include speech, fax and circuit switched data. NO BSG shall include mobile terminating CAMEL, unstructured supplementary service data, and location requests. Non-emergency only mobile terminating location requests cause these throttling PM counts to be pegged -- emergency ones don't, as they are not throttled. (RNC)

Data Source

Call Server

Source Field

VS.throttledSubsPages4RANoverload

Source Section

Throttling

Link Primitive Calculations

The following is a list of primitive calculations for the Link entity.

GRAPHmultiLineSeparator

Special Control Field for Multi-Line Graphs

Calculation

```
""
```

NUMDAYS

of days in Report

Calculation

```
DAYSINREPORT()
```

NUMHOURS

of hours in Summation Data

Calculation

SS7_LinkAvgDataRateRx

SS7 Link Average Data Rate on the receive path in kbps.

Calculation

```
SS7_LinkOctetsReceived / (128.0 * Data_Interval)
```

SS7_LinkAvgDataRateTx

SS7 Link Average Data Rate on the transmit path in kbps.

Calculation

```
SS7_LinkOctetsTransmitted / (128.0 * Data_Interval)
```

SS7_LinkOctetsReceived

SS7 Link Octets Received

Calculation

```
SS7MSUReceived * 6.0 + SIFandSIOoctetsReceived
```

SS7_LinkOctetsTransmitted

SS7 Link Octets Transmitted

Calculation

```
SS7MSUTransmitted * 6.0 + SIFandSIOoctetsTransmitted
```

Link Peg Counts

The following is a list of peg counts for the Link entity.

Data_Interval

Data interval for the Call Server data collection in seconds. It is taken from "duration" value of the relevant <granPeriod> tag in the Call Server XML data file.

Data Source

Call Server

Source Field

<granPeriod> tag "duration"

DurationLinkInService

The duration (in seconds) that the link is in the In-service state. Q.752 Reference: 1.1

Data Source

Call Server

Source Field

VS.DurationLinkInService

Source Section

SS7

LocalAutoChangeback

The number of Local Automatic Changebacks. Q.752 Reference: 1.11

Data Source

Call Server

Source Field

VS.LocalAutoChangeback

Source Section

SS7

LocalAutoChangeover

The number of Local Automatic Changeovers. Q.752 Reference: 1.10

Data Source

Call Server

Source Field

VS.LocalAutoChangeover

Source Section

SS7

PMCDiscardedMessages

Counts the number of discarded messages by the T1/E1 PM

Data Source

Call Server

Source Field

VS.PMCDiscardedMessages

Source Section

SS7 PMC

PMCMSUsReceived

Counts the number of received messages by the T1/E1 PMC

Data Source

Call Server

Source Field

VS.PMCMSUsReceived

Source Section

SS7 PMC

PMCMSUsTransmitted

Counts the number of transmitted messages by the T1/E1 PMC

Data Source

Call Server

Source Field

VS.PMCMSUsTransmitted

Source Section

SS7 PMC

Pri0MsgsDiscardedDueSLCongestion

The number of messages that are discarded due to Signalling Link (SL) congestion. Q.752 Reference: 3.11

Data Source

Call Server

Source Field

VS.Pri0MsgsDiscardedDueSLCongestion

Source Section

SS7

Pri1MsgsDiscardedDueSLCongestion

The number of messages that are discarded due to Signalling Link (SL) congestion. Q.752 Reference: 3.11

Data Source

Call Server

Source Field

VS.Pri1MsgsDiscardedDueSLCongestion

Source Section

SS7

Pri2MsgsDiscardedDueSLCongestion

The number of messages that are discarded due to Signalling Link (SL) congestion. Q.752 Reference: 3.11

Data Source

Call Server

Source Field

VS.Pri2MsgsDiscardedDueSLCongestion

Source Section

SS7

Pri3MsgsDiscardedDueSLCongestion

The number of messages that are discarded due to Signalling Link (SL) congestion. Q.752 Reference: 3.11

Data Source

Call Server

Source Field

VS.Pri3MsgsDiscardedDueSLCongestion

Source Section

SS7

SIFandSIOoctetsReceived

Number of SIF (Service Information Field) and SIO (Service Information Octet) octets received

Data Source

Call Server

Source Field

VS.SIFandSIOoctetsReceived

Source Section

Link Capacity

SIFandSIOoctetsTransmitted

Number of SIF (Service Information Field) and SIO (Service Information Octet) octets transmitted

Data Source

Call Server

Source Field

VS.SIFandSIOoctetsTransmitted

Source Section

Link Capacity

SignalingLinkFailure

The number of signalling link failures for all reasons. Q.752 Reference: 1.2

Data Source

Call Server

Source Field

VS.SignalingLinkFailure

Source Section

SS7

SS7Duration_LinkUnavailable

The cumulative time (in mini-seconds) that the link was unavailable during the associated time interval.

Data Source

Call Server

Source Field

VS.SS7Duration-LinkUnavailable

Source Section

Link Congestion

SS7IncomingMSUDiscarded

Incoming MSUs that could not be parsed or was discarded due to invalid content of message.

Data Source

Call Server

Source Field

VS.SS7IncomingMSUDiscarded

Source Section

SS7 Signaling

SS7Level1SigLinkCongestion

The number of times a signaling link enters a state of congestion level 1 (the congestion onset threshold is reached) and must begin MTP level-1 flow control.

Data Source

Call Server

Source Field

VS.SS7Level1SigLinkCongestion

Source Section

Link Congestion

SS7Level2SigLinkCongestion

The number of times a signaling link enters a state of congestion level 2 (the congestion onset threshold is reached) and must begin MTP level-2 flow control.

Data Source

Call Server

Source Field

VS.SS7Level2SigLinkCongestion

Source Section

Link Congestion

SS7Level3SigLinkCongestion

The number of times a signaling link enters a state of congestion level 3 (the congestion onset threshold is reached) and must begin MTP level-3 flow control.

Data Source

Call Server

Source Field

VS.SS7Level3SigLinkCongestion

Source Section

Link Congestion

SS7MSUReceived

The number of MSUs received by the Device Server on incoming links from the network.

Data Source

Call Server

Source Field

VS.SS7MSUReceived

Source Section

Link Capacity

SS7MSUReTransmitted

The number of MSUs retransmitted by the Device Server over outgoing links to the network.

Data Source

Call Server

Source Field

VS.SS7MSUReTransmitted

Source Section

Capacity

SS7MSUTransmitted

The number of MSUs transmitted (including those retransmitted) by the Device Server over outgoing links to the network.

Data Source

Call Server

Source Field

VS.SS7MSUTransmitted

Source Section

Link Capacity

SS7OctetsRetransmitted

SS7 Retransmitted Octets. The number of octets retransmitted by the Device Server over outgoing links to the network. This count is based on the ITU Q.752 Table Item 3.2.

Data Source

Call Server

Source Field

VS.SS7OctetsRetransmitted

Source Section

SS7

SS7Time_Level1Congestion

The cumulative time (in mini-seconds) spent in the level 1 congestion state.

Data Source

Call Server

Source Field

VS.SS7Time-Level1Congestion

Source Section

Link Congestion

SS7Time_Level2Congestion

The cumulative time (in mini-seconds) spent in the level 2 congestion state.

Data Source

Call Server

Source Field

VS.SS7Time-Level2Congestion

Source Section

Link Congestion

SS7Time_Level3Congestion

The cumulative time (in seconds) spent in the level 3 congestion state.

Data Source

Call Server

Source Field

VS.SS7Time-Level3Congestion

Source Section

Link Congestion

StartRemoteProcessorOutage

The number of occurrences of the start of a remote processor outage. Q.752 Reference: 2.10

Data Source

Call Server

Source Field

VS.StartRemoteProcessorOutage

Source Section

SS7

StopRemoteProcessorOutage

The number of occurrences of the stop of a remote processor outage. Q.752 Reference: 2.11

Data Source

Call Server

Source Field

VS.StopRemoteProcessorOutage

Source Section

SS7

LinkSet Primitive Calculations

The following is a list of primitive calculations for the LinkSet entity.

GRAPHmultiLineSeparator

Special Control Field for Multi-Line Graphs

Calculation

```
""
```

NUMDAYS

of days in Report

Calculation

```
DAYSINREPORT()
```

NUMHOURS

of hours in Summation Data

Calculation

LinkSet Peg Counts

The following is a list of peg counts for the LinkSet entity.

aveSCTPCongWindow1

Reports the average value of the SCTP Congestion Window 1 for each peer address seen during the reporting interval. Calculated based on a 10 second scan of the Congestion Window 1 size.

Data Source

Call Server

Source Field

VS.aveSCTPCongWindow1

Source Section

SCTP

aveSCTPCongWindow2

Reports the average value of the SCTP Congestion Window 2 for each peer address seen during the reporting interval. Calculated based on a 10 second scan of the Congestion Window 2 size.

Data Source

Call Server

Source Field

VS.aveSCTPCongWindow2

Source Section

SCTP

aveSCTPLocalRecWindow

Reports the average value of the local SCTP receive window seen during the reporting interval. Calculated based on a 10 second scan of the received window size.

Data Source

Call Server

Source Field

VS.aveSCTPLocalRecWindow

Source Section

SCTP

aveSCTPPeerRecWindow

Reports the average value of the peer's receive window seen during the reporting interval. Calculated based on a 10 second scan of the peer's receive window size.

Data Source

Call Server

Source Field

VS.aveSCTPPeerRecWindow

Source Section

SCTP

aveSCTPPendingData

Report the average number of data chunks that the application has not read yet seen during the reporting interval. Calculated based on a 10 second scan of the number unread data chunks.

Data Source

Call Server

Source Field

VS.aveSCTPPendingData

Source Section

SCTP

aveSCTPUnackData

Reports the average number of unacknowledged data chunks pending for peer address seen during the reporting interval. Calculated based on a 10 second scan of the number unacknowledged data chunks pending.

Data Source

Call Server

Source Field

VS.aveSCTPUnackData

Source Section

SCTP

Data_Interval

Data interval for the Call Server data collection in seconds. It is taken from "duration" value of the relevant <granPeriod> tag in the Call Server XML data file.

Data Source

Call Server

Source Field

<granPeriod> tag "duration"

minSCTPCongWindow1

Reports the minimum value of the SCTP Congestion Window 1 for each peer address seen during the reporting interval. Calculated based on a 10 second scan of the Congestion Window 1 size.

Data Source

Call Server

Source Field

VS.minSCTPCongWindow1

Source Section

SCTP

minSCTPCongWindow2

Reports the minimum value of the SCTP Congestion Window 2 for each peer address seen during the reporting interval. Calculated based on a 10 second scan of the Congestion Window 2 size.

Data Source

Call Server

Source Field

VS.minSCTPCongWindow2

Source Section

SCTP

minSCTPLocalRecWindow

Reports the minimum value of the local SCTP receive window seen during the reporting interval. Calculated based on a 10 second scan of the received window size.

Data Source

Call Server

Source Field

VS.minSCTPLocalRecWindow

Source Section

SCTP

minSCTPPeerRecWindow

Reports the minimum value of the peer's receive window seen during the reporting interval. Calculated based on a 10 second scan of the peer's receive window size.

Data Source

Call Server

Source Field

VS.minSCTPPeerRecWindow

Source Section

SCTP

minSCTPPendingData

Reports the minimum number of data chunks that the application has not read yet seen during the reporting interval. Calculated based on a 10 second scan of the number unread data chunks.

Data Source

Call Server

Source Field

VS.minSCTPPendingData

Source Section

SCTP

minSCTPUnackData

Reports the minimum number of unacknowledged data chunks pending for peer address seen during the reporting interval. This count is calculated based on a 10 second scan of the number unacknowledged data chunks pending.

Data Source

Call Server

Source Field

VS.minSCTPUnackData

Source Section

SCTP

peakSCTPCongWindow1

Reports the peak value of the SCTP Congestion Window 1 for each peer address seen during the reporting interval. Calculated based on a 10 second scan of the Congestion Window 1 size. Reports the average value of the SCTP Congestion Window 1 for each peer address seen during the reporting interval. Ccalculated based on a 10 second scan of the Congestion Window 1 size.

Data Source

Call Server

Source Field

VS.peakSCTPCongWindow1

Source Section

SCTP

peakSCTPCongWindow2

Reports the peak value of the SCTP Congestion Window 2 for each peer address seen during the reporting interval. Calculated based on a 10 second scan of the Congestion Window 2 size.

Data Source

Call Server

Source Field

VS.peakSCTPCongWindow2

Source Section

SCTP

peakSCTPLocalRecWindow

Reports the peak value of the local SCTP receive window seen during the reporting interval. Calculated based on a 10 second scan of the received window size.

Data Source

Call Server

Source Field

VS.peakSCTPLocalRecWindow

Source Section

SCTP

peakSCTPPeerRecWindow

Reports the peak value of the peer's receive window seen during the reporting interval. Calculated based on a 10 second scan of the peer's receive window size.

Data Source

Call Server

Source Field

VS.peakSCTPPeerRecWindow

Source Section

SCTP

peakSCTPPendingData

Report the peak number of data chunks that the application has not read yet seen during the reporting interval. Calculated based on a 10 second scan of the number unread data chunks.

Data Source

Call Server

Source Field

VS.peakSCTPPendingData

Source Section

SCTP

peakSCTPUnackData

Reports the peak number of unacknowledged data chunks pending for peer address seen during the reporting interval. Calculated based on a 10 second scan of the number unacknowledged data chunks pending.

Data Source

Call Server

Source Field

VS.peakSCTPUnackData

Source Section

SCTP

SS7TFAMSUReceived

Transfer-allowed MSUs received from a signaling point.

Data Source

Call Server

Source Field

VS.SS7TFAMSUReceived

Source Section

Linkset Capacity

SS7TFAMSUTransmitted

Transfer-allowed MSUs transmitted to another SP.

Data Source

Call Server

Source Field

VS.SS7TFAMSUTransmitted

Source Section

Linkset Capacity

StartLinkSetFailure

The number of occurrences of the start of a link set failure. Q.752 Reference: 4.3

Data Source

Call Server

Source Field

VS.StartLinkSetFailure

Source Section

SS7

StopLinkSetFailure

The number of occurrences of the stop of a link set failure. Q.752 Reference: 4.4

Data Source

Call Server

Source Field

VS.StopLinkSetFailure

Source Section

SS7

LMRS Primitive Calculations

The following is a list of primitive calculations for the LMRS entity.

GRAPHmultiLineSeparator

Special Control Field for Multi-Line Graphs

Calculation

""

NUMDAYS

of days in Report

Calculation

```
DAYSINREPORT()
```

NUMHOURS

of hours in Summation Data

LMRS_CPU Primitive Calculations

The following is a list of primitive calculations for the LMRS_CPU entity.

GRAPHmultiLineSeparator

Special Control Field for Multi-Line Graphs

Calculation

```
""
```

NUMDAYS

of days in Report

Calculation

```
DAYSINREPORT()
```

NUMHOURS

of hours in Summation Data

Calculation

LMRS_CPU Peg Counts

The following is a list of peg counts for the LMRS_CPU entity.

ACTUALTIME

Actual Time

Data Source

LMRS

Source Field

ACTUALTIME

Source Section

CPU

BLOCKED_MODE

Percentage of time waiting for blocked I/O

Data Source

LMRS

Source Field

BLOCKED_MODE

Source Section

CPU

DURATION

Duration of the LMRS measurement

Data Source

LMRS

Source Field

DURATION

Source Section

CPU

IDLE_MODE

Percentage of time that the application server is idle

Data Source

LMRS

Source Field

IDLE_MODE

Source Section

CPU

SCHEDTIME

Schedule Time

Data Source

LMRS

Source Field

SCHEDTIME

Source Section

CPU

SYS_MODE

Percentage of time running in system mode

Data Source

LMRS

Source Field

SYS_MODE

Source Section

CPU

USR_MODE

Percentage of time running in user mode

Data Source

LMRS

Source Field

USR_MODE

Source Section

CPU

VM_AVG_FAULTS

The average number of virtual memory page faults per second

Data Source

LMRS

Source Field

VM_AVG_FAULTS

Source Section

CPU

VM_AVG_PAGEOUT

The average number of page outs per second

Data Source

LMRS

Source Field

VM_AVG_PAGEOUT

Source Section

CPU

VM_AVG_SCAN

The rate at which Solaris is scanning pages per second

Data Source

LMRS

Source Field

VM_AVG_SCAN

Source Section

CPU

VM_PEAK_FAULTS

The highest number of virtual memory page faults that occur during any 1 minute period

Data Source

LMRS

Source Field

VM_PEAK_FAULTS

Source Section

CPU

LMRS_Host Primitive Calculations

The following is a list of primitive calculations for the LMRS_Host entity.

GRAPHmultiLineSeparator

Special Control Field for Multi-Line Graphs

Calculation

```
""
```

NUMDAYS

of days in Report

Calculation

```
DAYSINREPORT()
```

NUMHOURS

of hours in Summation Data

Calculation

LMRS_Host Peg Counts

The following is a list of peg counts for the LMRS_Host entity.

ACTUALTIME

Actual Time

Data Source

LMRS

Source Field

ACTUALTIME

Source Section

Traffic

DURATION

Duration of the LMRS measurement

Data Source

LMRS

Source Field

DURATION

Source Section

Traffic

IN_BYTES

The number of incoming message bytes from the remote hosts

Data Source

LMRS

Source Field

IN_BYTES

Source Section

Traffic

IN_MSGS

The number of incoming messages from the remote hosts.

Data Source

LMRS

Source Field

IN_MSGS

Source Section

Traffic

OUT_BYTES

The number of outgoing message bytes to the remote hosts

Data Source

LMRS

Source Field

OUT_BYTES

Source Section

Traffic

OUT_MSGS

The number of outgoing messages to the remote hosts

Data Source

LMRS

Source Field

OUT_MSGS

Source Section

Traffic

SCHEDTIME

Schedule Time

Data Source

LMRS

Source Field

SCHEDTIME

Source Section

Traffic

LMRS_Partition Primitive Calculations

The following is a list of primitive calculations for the LMRS_Partition entity.

GRAPHmultiLineSeparator

Special Control Field for Multi-Line Graphs

Calculation

```
""
```

NUMDAYS

of days in Report

Calculation

```
DAYSINREPORT()
```

NUMHOURS

of hours in Summation Data

Calculation

LMRS_Partition Peg Counts

The following is a list of peg counts for the LMRS_Partition entity.

ACTUALTIME

Actual Time

Data Source

LMRS

Source Field

ACTUALTIME

Source Section

Disk

AVAIL

Kilobytes available

Data Source

LMRS

Source Field

AVAIL

Source Section

Disk

CAPACITY

Capacity utilization percentage

Data Source

LMRS

Source Field

CAPACITY

Source Section

Disk

DURATION

Duration of the LMRS measurement

Data Source

LMRS

Source Field

DURATION

Source Section

Disk

KBYTES

Kilobytes available

Data Source

LMRS

Source Field

KBYTES

Source Section

Disk

SCHEDTIME

Schedule Time

Data Source

LMRS

Source Field

SCHEDTIME

Source Section

Disk

USED

Kilobytes used

Data Source

LMRS

Source Field

USED

Source Section

Disk

LMRS_Resource_Pool Primitive Calculations

The following is a list of primitive calculations for the LMRS_Resource_Pool entity.

GRAPHmultiLineSeparator

Special Control Field for Multi-Line Graphs

Calculation

""

NUMDAYS

of days in Report

Calculation

```
DAYSINREPORT()
```

NUMHOURS

of hours in Summation Data

Calculation

LMRS_Resource_Pool Peg Counts

The following is a list of peg counts for the LMRS_Resource_Pool entity.

ACTUALTIME

Actual Time

Data Source

LMRS

Source Field

ACTUALTIME

Source Section

Media

ALNORSC

The number of failures due to unavailability of a resource of the type identified in the POOL field

Data Source

LMRS

Source Field

ALNORSC

Source Section

Media

ALREQ

The number of requests for a resource of the type identified in the POOL field

Data Source

LMRS

Source Field

ALREQ

Source Section

Media

ALSUCC

The number of successful requests for a resource of the type identified in the POOL field

Data Source

LMRS

Source Field

ALSUCC

Source Section

Media

DURATION

Duration of the LMRS measurement

Data Source

LMRS

Source Field

DURATION

Source Section

Media

HIWATER

The highest number of simultaneous port group resources allocated in the interval.

Data Source

LMRS

Source Field

HIWATER

Source Section

Media

MTUSAGE

The hundred call seconds (CCS) of maintenance for a pool of resources of the type identified in the POOL field. Maintenance usage implies a usage count for a resource that is not available for allocation

Data Source

LMRS

Source Field

MTUSAGE

Source Section

Media

PORTS

The number of requests for a resource of the type identified in the POOL field

Data Source

LMRS

Source Field

PORTS

Source Section

Media

SCHEDTIME

Schedule Time

Data Source

LMRS

Source Field

SCHEDTIME

Source Section

Media

USAGE

The hundred call seconds (CCS) of use for a pool of resources of the type identified in the POOL field.

Data Source

LMRS

Source Field

USAGE

Source Section

Media

LNG Primitive Calculations

The following is a list of primitive calculations for the LNG entity.

GRAPHmultiLineSeparator

Special Control Field for Multi-Line Graphs

Calculation

```
""
```

NUMDAYS

of days in Report

Calculation

```
DAYSINREPORT()
```

NUMHOURS

of hours in Summation Data

Updated: 2009-06-23

Calculation

LNG Peg Counts

The following is a list of peg counts for the LNG entity.

MGTOTALJITTERVOIPCTXTS

Total jitter VoIP contexts system-wide

Data Source

LNG

Source Field

VS.MGTOTALJITTERVOIPCTXTS

Source Section

VOIP Circuit Monitoring

MGTOTALVOIPCTXTS

Total VoIP contexts system wide

Data Source

LNG

Source Field

VS.MGTOTALVOIPCTXTS

Source Section

VOIP Circuit Monitoring

noEcAvailCurrent

Number of requests for TDM echo cancellation that have failed due to resource unavailability since the last issuance of this command. Call failures are occurring when this value is greater than 0.

Data Source

LNG

Source Field

VS.noEcAvailCurrent

Source Section

MGW

numEcAttempts

Number of requests for TDM terminations that contain an echo cancellation request since the last issuance of this command based on how used.

Data Source

LNG

Source Field

VS.numEcAttempts

Source Section

MGW

NumG711ClearChanAvail

Estimated number of resources available for G.711 Clear Channel data calls.

Data Source

LNG

Source Field

VS.NumG711ClearChanAvail

Source Section

MGW

NumTDMTermAvail

Number of TDM terminations available.

Data Source

LNG

Source Field

VS.NumTDMTermAvail

Source Section

MGW

NumTDMTermUsed

Number of TDM terminations used.

Data Source

LNG

Source Field

VS.NumTDMTermUsed

Source Section

MGW

NumVOIPTermUsed

Number of VoIP terminations used. Compare to VS.NumG711ClearChanAvail.

Data Source

LNG

Source Field

VS.NumVOIPTermUsed

Source Section

MGW

OCTRX

Sum of octets received in IP packets by the set of VSMs in the system. As each call is released its packet count is added to this counter.

Data Source

LNG

Source Field

VS.OCTRX

Source Section

VOIP Circuit Monitoring

OCTTX

Sum of octets transmitted in IP packets by the set of VSMs in the system. As each call is released its packet count is added to this counter.

Data Source

LNG

Source Field

VS.OCTTX

Source Section

VOIP Circuit Monitoring

PKTLOST

Sum of IP packets not receieved by set of VSMs in the system. Lost packets are identified on the VSMs by using the RTP sequence number. As each call is released its lost packet count is added to this counter.

Data Source

LNG

Source Field

VS.PKTLOST

Source Section

VOIP Circuit Monitoring

PKTRX

Sum of IP packets received by set of VSMs in the system. As each call is released its lost packet count is added to this counter.

Data Source

LNG

Source Field

VS.PKTRX

Source Section

VOIP Circuit Monitoring

PKTTX

Sum of IP packets transmitted by set of VSMs in the system. As each call is released its lost packet count is added to this counter.

Data Source

LNG

Source Field

VS.PKTTX

Source Section

VOIP Circuit Monitoring

VOIPTDMEcAvail

Number of resources available for TDM echo cancellation on a VoIP IOM.2688 and lower decremented based on how used.

Data Source

LNG

Source Field

VS.VOIPTDMEcAvail

Source Section

MGW

LNG_Ethernet Primitive Calculations

The following is a list of primitive calculations for the LNG_Ethernet entity.

GRAPHmultiLineSeparator

Special Control Field for Multi-Line Graphs

Calculation

```
""
```

NUMDAYS

of days in Report

Calculation

```
DAYSINREPORT()
```

NUMHOURS

of hours in Summation Data

Calculation

LNG_Ethernet Peg Counts

The following is a list of peg counts for the LNG_Ethernet entity.

OctetRx

An increasing counter and can rollover its 32-bit counter multiple times in the 15 minute interval. Changed to a kilo-Octet count in 6.3.0.4 so that GigE occupancy can be measured when the counters are captured at 15 minute intervals.

Data Source

LNG

Source Field

VS.OctetRx

Source Section

Ethernet Monitoring

OctetTx

An increasing counter and can rollover its 32-bit counter multiple times in the 15 minute interval. Changed to a kilo-Octet count in 6.3.0.4 so that GigE occupancy can be measured when the counters are captured at 15 minute intervals.

Data Source

LNG

Source Field

VS.OctetTx

Source Section

Ethernet Monitoring

LNG_Ethernet_SP Primitive Calculations

The following is a list of primitive calculations for the LNG_Ethernet_SP entity.

GRAPHmultiLineSeparator

Special Control Field for Multi-Line Graphs

Calculation

```
""
```

NUMDAYS

of days in Report

Calculation

```
DAYSINREPORT()
```

NUMHOURS

of hours in Summation Data

Calculation

LNG_Ethernet_SP Peg Counts

The following is a list of peg counts for the LNG_Ethernet_SP entity.

SPERRRX

Bad actets received at the Ethernet System Processor

Data Source

LNG

Source Field

VS.SPERRRX

Source Section

Ethernet Monitoring

SPOCTRX

Good octets received at the Ethernet System Processor

Data Source

LNG

Source Field

VS.SPOCTRX

Source Section

Ethernet Monitoring

SPOCTTX

Total octets sent from the Ethernet System Processor

Data Source

LNG

Source Field

VS.SPOCTTX

Source Section

Ethernet Monitoring

SPPAUSERX

Pause frames received at the Ethernet System Processor

Data Source

LNG

Source Field

VS.SPPAUSERX

Source Section

Ethernet Monitoring

SPPAUSETX

Pause frames sent from the Ethernet System Processor

Data Source

LNG

Source Field

VS.SPPAUSETX

Source Section

Ethernet Monitoring

LNG_Network_Element Primitive Calculations

The following is a list of primitive calculations for the LNG_Network_Element entity.

GRAPHmultiLineSeparator

Special Control Field for Multi-Line Graphs

Calculation

```
""
```

NUMDAYS

of days in Report

Calculation

```
DAYSINREPORT()
```

NUMHOURS

of hours in Summation Data

Calculation

LNG_Network_Element Peg Counts

The following is a list of peg counts for the LNG_Network_Element entity.

AVGCPUUSAGE

The average percent of CPU occupancy in the last time period.

Data Source

LNG

Source Field

AVGCPUUSAGE

Source Section

NE Health

AVGDSPCTRLUSAGE

Average percent of the DSP control plane used in the last time period.

Data Source

LNG

Source Field

AVGDSPCTRLUSAGE

Source Section

VSM Monitoring

DISKUSED1

Current amount of storage marked as used by the OS. There are three 2-Gig partitions on the SP disk.

Data Source

LNG

Source Field

DISKUSED1

Source Section

NE Health

DISKUSED2

Current amount of non-volatile storage marked as used by the OS. This partition is used for billing data storage by the Lucent Gateway Platform.

Data Source

LNG

Source Field

DISKUSED2

Source Section

NE Health

DISKUSED3

Current amount of non-volatile storage marked as used by the OS. There are three 2-Gig partitions on the SP disk.

Data Source

LNG

Source Field

DISKUSED3

Source Section

NE Health

MEMFREE

Current amount of memory marked as free by the OS.

Data Source

LNG

Source Field

MEMFREE

Source Section

NE Health

MEMUSED

Current amount of memory marked as free by the OS, the amount of memory used by the OS and the LNG applications running on a module.

Data Source

LNG

Source Field

MEMUSED

Source Section

NE Health

PEAKCPUUSAGE

The highest CPU occupancy that the CPU was running for a second in the last time period.

Data Source

LNG

Source Field

PEAKCPUUSAGE

Source Section

NE Health

PEAKDSPCTRLUSAGE

Peak percent of the DSP control plane used in the last time period.

Data Source

LNG

Source Field

PEAKDSPCTRLUSAGE

Source Section

VSM Monitoring

LNG_VCC_EndPoint Primitive Calculations

The following is a list of primitive calculations for the LNG_VCC_EndPoint entity.

GRAPHmultiLineSeparator

Special Control Field for Multi-Lie Graphs

Calculation

```
""
```

NUMDAYS

of days in Report

Calculation

```
DAYSINREPORT()
```

NUMHOURS

of hours in Summation Data

Calculation

LNG_VCC_EndPoint Peg Counts

The following is a list of peg counts for the LNG_VCC_EndPoint entity.

CKTUSED

A snapshot of the number of circuits used. Represents calls that are in progress.

Data Source

LNG

Source Field

VS.CKTUSED

Source Section

VCC endpoint AAL2 Traffic

MediaGW_CS Primitive Calculations

The following is a list of primitive calculations for the MediaGW_CS entity.

GRAPHmultiLineSeparator

Special Control Field for Multi-Line Graphs

Calculation

```
""
```

NUMDAYS

of days in Report

Calculation

```
DAYSINREPORT()
```

NUMHOURS

of hours in Summation Data

Calculation

MediaGW_CS Peg Counts

The following is a list of peg counts for the MediaGW_CS entity.

Data_Interval

Data interval for the Call Server data collection in seconds. It is taken from "duration" value of the relevant <granPeriod> tag in the Call Server XML data file.

Data Source

Call Server

Source Field

<granPeriod> tag "duration"

MgwUsage

Media Gateway Usage. Sum of all VS.channelAnsUsed values for all ChannelGroups per Mgw

Data Source

Call Server

Source Field

VS.MgwUsage

Source Section

MGW

numMgwVSMs

Number of In Service and Active VSMs per Media Gateway. The number of in service and active VSM IOMs with in a media gateway. This value shall be kept current by a 5 minute scan in order to be compliant with the minimum collection interval.

Data Source

Call Server

Source Field

VS.numMgwVSMs

Source Section

MGW

MediaResourceServer Primitive Calculations

The following is a list of primitive calculations for the MediaResourceServer entity.

GRAPHmultiLineSeparator

Special Control Field for Multi-Line Graphs

Calculation

```
""
```

NUMDAYS

of days in Report

Calculation

```
DAYSINREPORT()
```

NUMHOURS

of hours in Summation Data

Calculation

MediaResourceServer Peg Counts

The following is a list of peg counts for the MediaResourceServer entity.

AnnSetupAtt

Call Setup Attempts - Announcement

Data Source

Call Server

Source Field

VS.AnnSetupAtt

Source Section

Tones and Announcement (MSID)

AnnSetupSucc

Successful Call Setup Attempts - Announcements

Data Source

Call Server

Source Field

VS.AnnSetupSucc

Source Section

Tones and Announcement (MSID)

Data_Interval

Data interval for the Call Server data collection in seconds. It is taken from "duration" value of the relevant <granPeriod> tag in the Call Server XML data file.

Data Source

Call Server

Source Field

<granPeriod> tag "duration"

ToneSetupAtt

Call Setup Attempts - Tones

Data Source

Call Server

Source Field

VS.ToneSetupAtt

Source Section

Tones and Announcement (MSID)

ToneSetupSucc

Successful Call Setup Attempts - Tones

Data Source

Call Server

Source Field

VS.ToneSetupSucc

Source Section

Tones and Announcement (MSID)

MGW_BearerType_CS Primitive Calculations

The following is a list of primitive calculations for the MGW_BearerType_CS entity.

GRAPHmultiLineSeparator

Special Control Field for Multi-Line Graphs

Calculation

```
""
```

NUMDAYS

of days in Report

Calculation

```
DAYSINREPORT()
```

NUMHOURS

of hours in Summation Data

Calculation

MGW_BearerType_CS Peg Counts

The following is a list of peg counts for the MGW_BearerType_CS entity.

attIPPBSetups

This count shall be pegged each time the system attempts an IP packet bearer setup. If the system is acting as a Gateway MSC, IP packet bearer is used on both the ingress and egress legs of the call, this count shall be pegged twice. If the remote address is changed, such as in the case of a late Call Forwarding, this count could be pegged twice. This count shall not be pegged for Circuit Switched Data (CSD) calls.

Data Source

Call Server

Source Field

VS.attIPPBSetups

Source Section

MGW Operations

Data_Interval

Data interval for the Call Server data collection in seconds. It is taken from "duration" value of the relevant <granPeriod> tag in the Call Server XML data file.

Data Source

Call Server

Source Field

<granPeriod> tag "duration"

mgcAttAddTerm

MGC H.248 Add Termination Attempts

Data Source

Call Server

Source Field

VS.mgcAttAddTerm

Source Section

Per H248 (Media Gateway Control) Service Member, per Media Gateway, per Bearer Type

mgcAttModTerm

MGC H.248 Modify Termination Attempts

Data Source

Call Server

Source Field

VS.mgcAttModTerm

Source Section

Per H248 (Media Gateway Control) Service Member, per Media Gateway, per Bearer Type

mgcAttSubtTerm

MGC H.248 Subtract Termination Attempts

Data Source

Call Server

Source Field

VS.mgcAttSubtTerm

Source Section

Per H248 (Media Gateway Control) Service Member, per Media Gateway, per Bearer Type

mgcCompAddTerm

MGC H.248 Completed Add Terminations Received

Data Source

Call Server

Source Field

VS.mgcCompAddTerm

Source Section

Per H248 (Media Gateway Control) Service Member, per Media Gateway, per Bearer Type

mgcCompModTerm

MGC H.248 Completed Modify Terminations Received

Data Source

Call Server

Source Field

VS.mgcCompModTerm

Source Section

Per H248 (Media Gateway Control) Service Member, per Media Gateway, per Bearer Type

mgcCompSubtTerm

MGC H.248 Completed Subtract Terminations Received

Data Source

Call Server

Source Field

VS.mgcCompSubtTerm

Source Section

Per H248 (Media Gateway Control) Service Member, per Media Gateway, per Bearer Type

mgcFailAddTerm

MGC H.248 Failed Add Terminations Received

Data Source

Call Server

Source Field

VS.mgcFailAddTerm

Source Section

Per H248 (Media Gateway Control) Service Member, per Media Gateway, per Bearer Type

mgcFailModTerm

MGC H.248 Failed Modify Terminations Received

Data Source

Call Server

Source Field

VS.mgcFailModTerm

Source Section

Per H248 (Media Gateway Control) Service Member, per Media Gateway, per Bearer Type

mgcFailSubtTerm

MGC H.248 Failed Subtract Terminations Received

Data Source

Call Server

Source Field

VS.mgcFailSubtTerm

Source Section

Per H248 (Media Gateway Control) Service Member, per Media Gateway, per Bearer Type

succIPPBSetups

This count shall be pegged for each successful IP packet bearer setup. This count shall be pegged twice in the case of a successful IP packet bearer setup on both the ingress and egress legs of a call. It could also be pegged twice in the case of a remote address change, such as in a late call forwarding case. This count shall not be pegged for Circuit Switched Data (CSD) calls.

Data Source

Call Server

Source Field

VS.succIPPBSetups

Source Section

MGW Operations

MGW_CmdType_CS Primitive Calculations

The following is a list of primitive calculations for the MGW_CmdType_CS entity.

GRAPHmultiLineSeparator

Special Control Field for Multi-Line Graphs

Calculation

```
""
```

NUMDAYS

of days in Report

Calculation

```
DAYSINREPORT()
```

NUMHOURS

of hours in Summation Data

MGW_CmdType_CS Peg Counts

The following is a list of peg counts for the MGW_CmdType_CS entity.

mgcDiscardedCmdReplies

If the MGC does not receive a transactionReply before all re-transmissions and timeouts are exhausted, the the MGC will delete such a a transaction. If a transactionReply is received after this point, the MGC does not know anything about the associated transaction and will discard the transactionReply and this count is pegged. This count is pegged on a per H248 DS, per MGW, per Command Type basis.

Data Source

Call Server

Source Field

VS.mgcDiscardedCmdReplies

Source Section

MGW Operations

MGW_CodecType_CS Primitive Calculations

The following is a list of primitive calculations for the MGW_CodecType_CS entity.

GRAPHmultiLineSeparator

Special Control Field for Multi-Line Graphs

Calculation

```
""
```

NUMDAYS

of days in Report

Calculation

```
DAYSINREPORT()
```

NUMHOURS

of hours in Summation Data

Calculation

MGW_CodecType_CS Peg Counts

The following is a list of peg counts for the MGW_CodecType_CS entity.

attIPPBSetups

This count shall be pegged each time the system attempts an IP packet bearer setup. If the system is acting as a Gateway MSC, IP packet bearer is used on both the ingress and egress legs of the call, this count shall be pegged twice. If the remote address is changed, such as in the case of a late Call Forwarding, this count could be pegged twice. This count shall not be pegged for Circuit Switched Data (CSD) calls.

Data Source

Call Server

Source Field

VS.attIPPBSetups

Source Section

MGW Operations

Data_Interval

Data interval for the Call Server data collection in seconds. It is taken from "duration" value of the relevant <granPeriod> tag in the Call Server XML data file.

Data Source

Call Server

Source Field

<granPeriod> tag "duration"

succIPPBSetups

This count shall be pegged for each successful IP packet bearer setup. This count shall be pegged twice in the case of a successful IP packet bearer setup on both the ingress and egress legs of a call. It could also be pegged twice in the case of a remote address change, such as in a late call forwarding case. This count shall not be pegged for Circuit Switched Data (CSD) calls.

Data Source

Call Server

Source Field

VS.succIPPBSetups

Source Section

MGW Operations

MGW_CS Primitive Calculations

The following is a list of primitive calculations for the MGW_CS entity.

GRAPHmultiLineSeparator

Special Control Field for Multi-Line Graphs

Calculation

```
""
```

NUMDAYS

of days in Report

Calculation

```
DAYSINREPORT()
```

Updated: 2009-06-23

NUMHOURS

of hours in Summation Data

Calculation

MGW_CS Peg Counts

The following is a list of peg counts for the MGW_CS entity.

attIPPBCSDSetups

This count shall be pegged each time the system attempts a packet bearer inter- circuit switched data path setup. This count shall be pegged twice for the half-call bearer setup i.e. once each context (AWAG and IWF). This count shall be pegged only once when the IWF is used to add two IP terminations.

Data Source

Call Server

Source Field

VS.attIPPBCSDSetups

Source Section

MGW Operations

attIPPBMGWInserts

The count shall be pegged each time the system attempts to insert a media gateway context into the IP bearer path. It shall be pegged count when an H.248 transaction creates a context by adding either one or two IP terminations without any TDM or ATM termination.

Data Source

Call Server

Source Field

VS.attIPPBMGWInserts

Source Section

MGW Operations

attPBMGWCodecMods

This count shall be pegged for each packet bearer Media Gateway codec modification attempt. It shall apply only to codec changes in the H.248 remoteDescriptor.

Data Source

Call Server

Source Field

VS.attPBMGWCodecMods

Source Section

MGW Operations

Data_Interval

Data interval for the Call Server data collection in seconds. It is taken from "duration" value of the relevant <granPeriod> tag in the Call Server XML data file.

Data Source

Call Server

Source Field

<granPeriod> tag "duration"

IPPktBearerMGWRemoves

The count shall be pegged for each successful removal of a media gateway from the IP packet bearer path.

Data Source

Call Server

Source Field

VS.IPPktBearerMGWRemoves

Source Section

MGW Operations

mgcActionReplyError

MGC H.248 Action Reply With Errors Received

Data Source

Call Server

Source Field

VS.mgcActionReplyError

Source Section

Per H248 (Media Gateway Control) Service Member per Media Gateway

mgcAuditValReplyErr

MGC H.248 AuditValue Reply With Errors Received

Data Source

Call Server

Source Field

VS.mgcAuditValReplyErr

Source Section

Per H248 (Media Gateway Control) Service Member per Media Gateway

mgcAuditValueReq

MGC H.248 AuditValue Command Requests Sent

Data Source

Call Server

Source Field

VS.mgcAuditValueReq

Source Section

Per H248 (Media Gateway Control) Service Member per Media Gateway

mgcDiscServChg

MGC H.248 Disconnected Service Changes Received

Data Source

Call Server

Source Field

VS.mgcDiscServChg

Source Section

Per H248 (Media Gateway Control) Service Member per Media Gateway

mgcFailoverServChgRoot

MGC H.248 Failover Service Changes for Root Received

Data Source

Call Server

Source Field

VS.mgcFailoverServChgRoot

Source Section

Per H248 (Media Gateway Control) Service Member per Media Gateway

mgcFailoverServChgTerm

MGC H.248 Failover Service Changes For Terminations Received

Data Source

Call Server

Source Field

VS.mgcFailoverServChgTerm

Source Section

Per H248 (Media Gateway Control) Service Member per Media Gateway

mgcForcedServChg

MGC H.248 Forced Service Changes Received

Data Source

Call Server

Source Field

VS.mgcForcedServChg

Source Section

Per H248 (Media Gateway Control) Service Member per Media Gateway

mgcGraceServChg

MGC H.248 Graceful Service Change Received

Data Source

Call Server

Source Field

VS.mgcGraceServChg

Source Section

Per H248 (Media Gateway Control) Service Member per Media Gateway

mgcMaxHBTransReqRetxmitExcd

After the MGC sends a Heartbeat transactionRequest, if any transactionReply is not received within a transaction timeout period, the MGC will re-send another Heartbeat transaction. These heartbeat resends will happen until a configureable maximum number of re-sends is exhausted. At this point, the MGC drops the connection to the Media Gateway and this count is pegged because the maximum number of Heartbeat re-transmissions was exceeded.

Data Source

Call Server

Source Field

VS.mgcMaxHBTransReqRetxmitExcd

Source Section

MGW Operations

mgcMaxTransReqRetxmitExcd

If a transactionReply is not received within a transaction timeout period, the MGC will re-transmit the transaction. These re-transmissions will happen until a configureable maximum number of re-transmissions is exhausted. At this point, the MGC deletes the transaction and this count is pegged because the maximum number of re-transmissions was exceeded.

Data Source

Call Server

Source Field

VS.mgcMaxTransReqRetxmitExcd

Source Section

MGW Operations

mgcMGWThrottledMsgs

When a Media Gateway reports congestion, the MGC will throttle requests for some percentage of new calls depending on the level of congestion experienced by the media gateway. This count is pegged for XMC ALLOCATE_CONENCTION requests for new calls which were processed without generating any associated H.248 traffic. This count is not pegged for emergency calls, which are not throttled.

Data Source

Call Server

Source Field

VS.mgcMGWThrottledMsgs

Source Section

MGW Operations

mgcNotifyErrDesc

MGC H.248 Notify with Errors Received

Data Source

Call Server

Source Field

VS.mgcNotifyErrDesc

Source Section

Per H248 (Media Gateway Control) Service Member per Media Gateway

mgcNotifyNoErr

MGC H.248 Notify Received Count

Data Source

Call Server

Source Field

VS.mgcNotifyNoErr

Source Section

Per H248 (Media Gateway Control) Service Member per Media Gateway

mgcNotifyOvld

MGC H.248 Notify With Overload Received Count

Data Source

Call Server

Source Field

VS.mgcNotifyOvld

Source Section

Per H248 (Media Gateway Control) Service Member per Media Gateway

mgcRegisterAlarmCount

This count is pegged whenever a MGW reconnects, the gateway unregister alarm is cleared.

Data Source

Call Server

Source Field

VS.mgcRegisterAlarmCount

Source Section

MGW Operations

mgcRestartServChgRoot

MGC H.248 Restart Service Changes for Root Received

Data Source

Call Server

Source Field

VS.mgcRestartServChgRoot

Source Section

Per H248 (Media Gateway Control) Service Member per Media Gateway

mgcRestartServChgTerm

MGC H.248 Restart Service Changes for Terminations Received

Data Source

Call Server

Source Field

VS.mgcRestartServChgTerm

Source Section

Per H248 (Media Gateway Control) Service Member per Media Gateway

mgcServChgHORcvd

MGC H.248 Service Change Handoffs Received

Data Source

Call Server

Source Field

VS.mgcServChgHORcvd

Source Section

Per H248 (Media Gateway Control) Service Member per Media Gateway

mgcServChgHOSent

MGC H.248 Service Change Handoffs Sent

Data Source

Call Server

Source Field

VS.mgcServChgHOSent

Source Section

Per H248 (Media Gateway Control) Service Member per Media Gateway

mgcTransLost

MGC H.248 Transactions Lost due to Link Down or Congested

Data Source

Call Server

Source Field

VS.mgcTransLost

Source Section

Per H248 (Media Gateway Control) Service Member per Media Gateway

mgcTransPend

MGC H.248 Transactions Pending Received

Data Source

Call Server

Source Field

VS.mgcTransPend

Source Section

Per H248 (Media Gateway Control) Service Member per Media Gateway

mgcTransReplyErr

MGC H.248 Transaction Reply With Errors Received

Data Source

Call Server

Source Field

VS.mgcTransReplyErr

Source Section

Per H248 (Media Gateway Control) Service Member per Media Gateway

mgcTransReq

MGC H.248 Transaction Requests Sent

Data Source

Call Server

Source Field

VS.mgcTransReq

Source Section

Per H248 (Media Gateway Control) Service Member per Media Gateway

mgcTransReqReTrans

MGC H.248 Transaction Request Retransmissions Sent

Data Source

Call Server

Source Field

VS.mgcTransReqReTrans

Source Section

Per H248 (Media Gateway Control) Service Member per Media Gateway

mgcUnregisterAlarmCount

This count is pegged when a Media Gateway disconnects, the gateway unregistered alarm fires.

Data Source

Call Server

Source Field

VS.mgcUnregisterAlarmCount

Source Section

MGW Operations

succIPPBCSDSetups

This count shall be pegged for each successful IP packet bearer CSD bearer channel setup. This count shall be pegged twice for each half-call bearer setup success i.e. once for each context (AWAG and IWF).

Data Source

Call Server

Source Field

VS.succIPPBCSDSetups

Source Section

MGW Operations

succIPPBMGWInserts

The count shall be pegged for each successful context insertion of a media gateway into the IP packet bearer path.

Data Source

Call Server

Source Field

VS.succIPPBMGWInserts

Source Section

MGW Operations

succPBMGWCodecMods

This count shall be pegged for each successful packet bearer Media Gateway codec modification. It shall apply only to codec changes in the H.248 remoteDescriptor.

Data Source

Call Server

Source Field

VS.succPBMGWCodecMods

Source Section

MGW Operations

MGW_ErrorCode_CS Primitive Calculations

The following is a list of primitive calculations for the MGW_ErrorCode_CS entity.

GRAPHmultiLineSeparator

Special Control Field for Multi-Line Graphs

Calculation

```
""
```

NUMDAYS

of days in Report

Calculation

```
DAYSINREPORT()
```

NUMHOURS

of hours in Summation Data

MGW_ErrorCode_CS Peg Counts

The following is a list of peg counts for the MGW_ErrorCode_CS entity.

mgcErrorCodeRcvd

Pegged when the Media Gateway sends an error code in action, transaction or command replies indicating why the request was unsuccessfully processed. This count is pegged on a per H248 DS, per MGW, per Error Code basis.

Data Source

Call Server

Source Field

VS.mgcErrorCodeRcvd

Source Section

MGW Operations

MI_MsgsClass Primitive Calculations

The following is a list of primitive calculations for the MI_MsgsClass entity.

GRAPHmultiLineSeparator

Special Control Field for Multi-Line Graphs

Calculation

```
""
```

NUMDAYS

of days in Report

Calculation

```
DAYSINREPORT()
```

NUMHOURS

of hours in Summation Data

Calculation

MI_MsgsClass Peg Counts

The following is a list of peg counts for the MI_MsgsClass entity.

logServerBytesReceived

Pegged for each byte of data received from the LogServer from the CNFG server.

Data Source

Call Server

Source Field

VS.logServerBytesReceived

Source Section

MI Profiling

logServerMsgsForwarded

Pegged for each logServer message forwarded to an MI GUI client session.

Data Source

Call Server

Source Field

VS.logServerMsgsForwarded

Source Section

MI Profiling

logServerMsgsReceived

Pegged for each logServer message received from the CNFG server.

Data Source

Call Server

Source Field

VS.logServerMsgsReceived

Source Section

MI Profiling

MI_SNEType Primitive Calculations

The following is a list of primitive calculations for the MI_SNEType entity.

GRAPHmultiLineSeparator

Special Control Field for Multi-Line Graphs

Calculation

```
""
```

NUMDAYS

of days in Report

Calculation

```
DAYSINREPORT()
```

NUMHOURS

of hours in Summation Data

Calculation

MI_SNEType Peg Counts

The following is a list of peg counts for the MI_SNEType entity.

sbBackupSuccess

Pegged for each successful southbound NE backup, pegged on a SNE type basis, both for successful automatically scheduled and on-demand backups.

Data Source

Call Server

Source Field

VS.sbBackupSuccess

Source Section

MI Profiling

MSRNPool Primitive Calculations

The following is a list of primitive calculations for the MSRNPool entity.

GRAPHmultiLineSeparator

Special Control Field for Multi-Line Graphs

Calculation

```
""
```

NUMDAYS

of days in Report

Calculation

```
DAYSINREPORT()
```

NUMHOURS

of hours in Summation Data

MSRNPool Peg Counts

The following is a list of peg counts for the MSRNPool entity.

peakMSRNUsagePerPool

Represents the peak number of MSRNs in use for each MSRN pool in the reporting period. The number MSRNs in use is sampled every 10 seconds. The value of this count is the highest of these in-use values seen during the reporting period.

Data Source

Call Server

Source Field

VS.peakMSRNUsagePerPool

Source Section

MSRN / HON Pooling

regMSRNoverflow

Pegged for overflows from each regional MSRN pool (1-255) to the default system MSRN pool (0).

Data Source

Call Server

Source Field

VS.regMSRNoverflow

Source Section

MSRN / HON Pooling

totalMSRNPerPool

Represents the total number of MSRNs in each MSRN pool.

Data Source

Call Server

Source Field

VS.totalMSRNPerPool

Source Section

MSRN / HON Pooling

MTP_Stack Primitive Calculations

The following is a list of primitive calculations for the MTP_Stack entity.

GRAPHmultiLineSeparator

Special Control Field for Multi-Line Graphs

Calculation

```
""
```

NUMDAYS

of days in Report

Calculation

```
DAYSINREPORT()
```

NUMHOURS

of hours in Summation Data

MTP_Stack Peg Counts

The following is a list of peg counts for the MTP_Stack entity.

MTP_Pause

Pegged each time a MTP raises a PAUSE condition when there are no routes left to communicate with.

Data Source

Call Server

Source Field

VS.MTP_Pause

Source Section

SS7 MTP

MTP_Resume

Pegged each time when destination become accessible then MTP will send MTP_RESUME to destination, so the User Part can start sending the message to MTP.

Data Source

Call Server

Source Field

VS.MTP_Resume

Source Section

SS7 MTP

PDF Primitive Calculations

The following is a list of primitive calculations for the PDF entity.

GRAPHmultiLineSeparator

Special Control Field for Multi-Line Graphs

Calculation

```
""
```

NUMDAYS

of days in Report

Calculation

```
DAYSINREPORT()
```

NUMHOURS

of hours in Summation Data

PDF Peg Counts

The following is a list of peg counts for the PDF entity.

PDFAuthFail

When a Decision message is sent to the Policy Enforcement Point (PEP) that has failed authorization is sent to a PEP, the Policy Decision Function (PDF) shall peg the "PDF Authorization Failed" service Measurement Count.

Data Source

Call Server

Source Field

VS.PDFAuthFail

Source Section

SIP

PDFFailRptRec

When the Policy Decision Function (PDF) receives a Report Message from a Policy Enforcement Point (PEP) indicating a Failed implementation Attempt, the PDF shall peg the "PDF Failed Report Message Received" service Measurement Count.

Data Source

Call Server

Source Field

VS.PDFFailRptRec

Source Section

SIP

PDFFailUnsolDecSent

When the Policy Decision Function (PDF) attempts to send a Decision to a Policy Enforcement Point (PEP), but the message cannot be sent, the PDF shall peg the "PDF Failed Decision Sent" service Measurement Count.

Data Source

Call Server

Source Field

VS.PDFFailUnsolDecSent

Source Section

SIP

PDFReqRec

When a Common Open Policy Service (COPS) Request Message is received by the Policy Decision Function (PDF), the PDF shall peg the "PDF Request Message Received" service Measurement Count.

Data Source

Call Server

Source Field

VS.PDFReqRec

Source Section

SIP

PLMN Primitive Calculations

The following is a list of primitive calculations for the PLMN entity.

GRAPHmultiLineSeparator

Special Control Field for Multi-Line Graphs

Calculation

```
""
```

NUMDAYS

of days in Report

Calculation

```
DAYSINREPORT()
```

NUMHOURS

of hours in Summation Data

Calculation

RNC_BearerType Primitive Calculations

The following is a list of primitive calculations for the RNC_BearerType entity.

GRAPHmultiLineSeparator

Special Control Field for Multi-Line Graphs

Calculation

```
""
```

NUMDAYS

of days in Report

Calculation

```
DAYSINREPORT()
```

NUMHOURS

of hours in Summation Data

RNC_BearerType Peg Counts

The following is a list of peg counts for the RNC_BearerType entity.

attPageReqRNC

Attempted page requests per LAC / RNC.

Data Source

Call Server

Source Field

VS.attPageReqRNC

Source Section

Paging per Bearer Type

Data_Interval

Data interval for the Call Server data collection in seconds. It is taken from "duration" value of the relevant <granPeriod> tag in the Call Server XML data file.

Data Source

Call Server

Source Field

<granPeriod> tag "duration"

succPageReqRNC

Successful page requests per LAC / RNC.

Data Source

Call Server

Source Field

VS.succPageReqRNC

Source Section

Paging per Bearer Type

RNC_BearerType_CS Primitive Calculations

The following is a list of primitive calculations for the RNC_BearerType_CS entity.

GRAPHmultiLineSeparator

Special Control Field for Multi-Line Graphs

Calculation

```
""
```

NUMDAYS

of days in Report

Calculation

```
DAYSINREPORT()
```

NUMHOURS

of hours in Summation Data

RNC_BearerType_CS Peg Counts

The following is a list of peg counts for the RNC_BearerType_CS entity.

throttledFloodPages4RANoverload

Pegged when the MSC decides not to flood page a mobile terminating call / SMS/ LCS/ CAMEL/SS attempt due to per-RNC/BSC GUI control set to 'Inhibit paging' or 'Reduce Paging by a provisioned %'. When a BSC/RNC reports congestion via OVERLOAD message or when the Service Provider provisions it on the MSC, the MSC will throttle flood paging requests for certain types of pages depending on the level of congestion e.g. for inhibited paging retries or for any page based on a provisioned percentage. Note: Bearer Call Type of SMS, SPCH, and No BSG shall be supported for this count. SPCH in this case shall include speech, fax and circuit switched data. NO BSG shall include mobile terminating CAMEL, unstructured supplementary service data, and location requests. Non-emergency only mobile terminating location requests cause these throttling PM counts to be pegged -- emergency ones don't, as they are not throttled.(RNC)

Data Source

Call Server

Source Field

VS.throttledFloodPages4RANoverload

Source Section

Throttling

RNC_CS Primitive Calculations

The following is a list of primitive calculations for the RNC_CS entity.

GRAPHmultiLineSeparator

Special Control Field for Multi-Line Graphs

Calculation

```
""
```

IncomingExternalIntraMSC_HandoverSuccessRate

Incoming External Intra-MSC Handover Success Rate %

Calculation

```
succIncomingExternalIntraMSCHDOs * 100.0 / attIncomingExternalIntraMSCHDOs
```

NUMDAYS

of days in Report

Calculation

```
DAYSINREPORT()
```

NUMHOURS

of hours in Summation Data

Calculation

OutgoingExternalIntraMSC_HandoverSuccessRate

Outgoing External Intra-MSC Handover Success Rate %

Calculation

```
succOutgoingExternalIntraMSCHDOs * 100.0 / attOutgoingExternalIntraMSCHDOs
```

RNC_CS Peg Counts

The following is a list of peg counts for the RNC_CS entity.

attIncomingExternalIntraMSCHDOs

Counter moved to "T_CELL_RNC" entity fr 4.1.7.0.0. Attempted incoming External intra-MSC Handovers

Data Source

Call Server

Source Field

attIncomingExternalIntraMSCHDOs

Source Section

MSC HandOver (HDO) (UMTS)

attIncomingInterMSCHDOs

Counter moved to "T_CELL_RNC" entity fr 4.1.7.0.0. Attempted incoming inter-MSC Handovers

Data Source

Call Server

Source Field

attIncomingInterMSCHDOs

Source Section

MSC HandOver (HDO) (UMTS)

attOutgoingExternalIntraMSCHDOs

Counter moved to "T_CELL_RNC" entity fr 4.1.7.0.0. Attempted outgoing External intra-MSC Handovers

Data Source

Call Server

Source Field

attOutgoingExternalIntraMSCHDOs

Source Section

MSC HandOver (HDO) (UMTS)

attSubsequentInterMSCHDOsMSCa

Counter moved to "T_CELL_RNC" entity fr 4.1.7.0.0. Attempted subsequent inter-MSC Handovers (back to MSCa)

Data Source

Call Server

Source Field

attSubsequentInterMSCHDOsMSCa

Source Section

MSC HandOver (HDO) (UMTS)

attSubsequentInterMSCHDOsMSCc

Counter moved to "T_CELL_RNC" entity fr 4.1.7.0.0. Attempted subsequent inter-MSC Handovers (to MSCc)

Data Source

Call Server

Source Field

attSubsequentInterMSCHDOsMSCc

Source Section

MSC HandOver (HDO) (UMTS)

Data_Interval

Data interval for the Call Server data collection in seconds. It is taken from "duration" value of the relevant <granPeriod> tag in the Call Server XML data file.

Data Source

Call Server

Source Field

<granPeriod> tag "duration"

mobileOrigDropBeforeAlert_RNC

This count shall be pegged when a mobile originated call attempt (including emergency calls) is dropped or fails for a locally generated reason related to a system error after the bearer channel is allocated but before alerting begins. This includes bearer path setup failure, signalling path failure, or any abnormal release NOT resulting from a message received from the RNC or BSC. This count shall be pegged no more than once for each mobile originated call attempt and shall not be pegged for misdialed numbers, originating mobile hangups or any other originating subscriber related actions.

Data Source

Call Server

Source Field

VS.mobileOrigDropBeforeAlert

Source Section

Call Setup (RNC)

mobileOrigDropBeforeAns_RNC

This count shall be pegged when a mobile originated call attempt (including emergency calls) is dropped or fails for a locally generated reason related to a system error after alerting begins but before answer. This includes bearer path failure, signalling path failure, or any abnormal release NOT resulting from a message received from the RNC or BSC. This count shall be pegged no more than once for each mobile originated call attempt and shall not be pegged for misdialed numbers, originating mobile hangups or any other subscriber related actions.

Data Source

Call Server

Source Field

VS.mobileOrigDropBeforeAns

Source Section

Call Setup (RNC)

mobileOrigDroppedAfterAns_RNC

This count is pegged when a mobile originated call (including mobile emergency calls) is dropped after answer. It is pegged if an internal 3GMSC system error bearer path failure or signalling path failure (including SCCP failure) results in a stable call being dropped. This count is NOT pegged due the receipt of a RELEASE / CLEAR REQUEST message from the RNC / BSS; a separate counts exists for that event. This count is pegged no more than once for each mobile originated call.

Data Source

Call Server

Source Field

VS.mobileOrigDroppedAfterAns

Source Section

Call Setup (RNC)

mobileTermDropBeforeAlert_RNC

This count shall be pegged when a mobile terminated call attempt is dropped or fails for a locally generated reason related to a system error after the bearer channel is allocated but before alerting begins. This includes bearer path setup failure, signalling path failure or any abnormal release message NOT resulting from a message received from the RNC or BSC. This count shall be pegged no more than once for each mobile terminated call attempt and shall not be pegged for misdialed numbers or any other subscriber related actions.

Data Source

Call Server

Source Field

VS.mobileTermDropBeforeAlert

Source Section

Call Setup (RNC)

mobileTermDropBeforeAns_RNC

This count shall be pegged when a mobile terminated call attempt is dropped or fails for a locally generated reason related to a system error after alerting begins but before answer. This includes bearer path failure, signalling path failure or any abnormal release message NOT resulting from a message received from the RNC or BSC. This count shall be pegged no more than once for each mobile originated call attempt and shall not be pegged for misdialed numbers or any other subscriber related actions.

Data Source

Call Server

Source Field

VS.mobileTermDropBeforeAns

Source Section

Call Setup (RNC)

mobileTermDroppedAfterAns_RNC

This count is pegged when a mobile terminated call (including mobile emergency calls) is dropped after answer. It is pegged if an internal 3GMSC system error bearer path failure or signalling path failure (including SCCP failure) results in a stable call being dropped. This count is NOT be pegged due the receipt of a RELEASE / CLEAR REQUEST message from the RNC / BSS; a separate count exists for that event. This count is pegged no more than once for each mobile terminated call.

Data Source

Call Server

Source Field

VS.mobileTermDroppedAfterAns

Source Section

Call Setup (RNC)

succIncomingExternalIntraMSCHDOs

Counter moved to "T_CELL_RNC" entity fr 4.1.7.0.0. Successful incoming External intra-MSC Handovers

Data Source

Call Server

Source Field

succIncomingExternalIntraMSCHDOs

Source Section

MSC HandOver (HDO) (UMTS)

succIncomingInterMSCHDOS

Counter moved to "T_CELL_RNC" entity fr 4.1.7.0.0. Successful incoming inter-MSC Handovers

Data Source

Call Server

Source Field

succIncomingInterMSCHDOS

Source Section

MSC HandOver (HDO) (UMTS)

succOutgoingExternalIntraMSCHDOs

Counter moved to "T_CELL_RNC" entity fr 4.1.7.0.0. Successful outgoing External intra-MSC Handovers

Data Source

Call Server

Source Field

succOutgoingExternalIntraMSCHDOs

Source Section

MSC HandOver (HDO) (UMTS)

succSubsequentInterMSCHDOsMSCa

Counter moved to "T_CELL_RNC" entity fr 4.1.7.0.0. Successful subsequent inter-MSC Handovers (back to MSCa)

Data Source

Call Server

Source Field

succSubsequentInterMSCHDOsMSCa

Source Section

MSC HandOver (HDO) (UMTS)

succSubsequentInterMSCHDOsMSCc

Counter moved to "T_CELL_RNC" entity fr 4.1.7.0.0. Successful subsequent inter-MSC Handovers (to MSCc)

Data Source

Call Server

Source Field

succSubsequentInterMSCHDOsMSCc

Source Section

MSC HandOver (HDO) (UMTS)

RNC_SM_CS Primitive Calculations

The following is a list of primitive calculations for the RNC_SM_CS entity.

GRAPHmultiLineSeparator

Special Control Field for Multi-Line Graphs

Calculation

```
""
```

NUMDAYS

of days in Report

Calculation

```
DAYSINREPORT()
```

NUMHOURS

of hours in Summation Data

Calculation

RNC_SM_CS Peg Counts

The following is a list of peg counts for the RNC_SM_CS entity.

ansMobileOriginatingCalls

Pegged on receipt of "CC CONNECT ACKNOWLEDGE" Message from the originating MS, for the requested mobile originating call(RNC)

Data Source

Call Server

Source Field

ansMobileOriginatingCalls

Source Section

Call Setup

ansMobileTerminatingCalls

Pegged on the transmission of the CONNECTION ACKNOWLEDGE message to the called MS for the requested mobile terminating call.(RNC)

Data Source

Call Server

Source Field

ansMobileTerminatingCalls

Source Section

Call Setup

attCallsConfig14AMR

Pegged for all HPLMN UE origination and termination attempts assigned IuUP Version 2 AMR subrates when the MSC sends the RAB Assignment Request to the RNC.

Data Source

Call Server

Source Field

VS.attCallsConfig14AMR

Source Section

AMR Subrates

attCipheringModeControlProcs

Pegged for each ciphering mode control procedure attempted. It is pegged on the transmission of the CIPHER MODE COMMAND from the 3G-MSC to the RNC.This count was previously implemented as "attSecurityModeControlProcs" and is pegged for UMTS only. (RNC)

Data Source

Call Server

Source Field

attCipheringModeControlProcs

Source Section

Authorization

attHomerCallsAMR

Attempted Homer Calls using AMR Subrates. This count shall be pegged for all HPLMN (homer) UE origination and termination attempts assigned AMR subrates when the MSC sends the RAB Assignment Request to the RNC, with the following conditions: The AMR subrates feature is enabled for the MSC and Assignment of AMR subrates is allowed by the serving RNC. In the case of an AMR subrate call attempted that results into a Directed Retry Handover or is canceled due to a ongoing Relocation/Handover attempt, this count shall be decremented by 1 (if it is greater than zero). This count shall not be pegged for a RAB Assignment Request after having performed a Relocation/Handover. Notes: Subscribers from an Equivalent PLMN are considered homers and can use AMR subrates.

Data Source

Call Server

Source Field

VS.attHomerCallsAMR

Source Section

AMR Subrates

attInterVLRLocationUpdates

Attempted Inter-VLR Location Updates. Pegged for each inter-VLR location update attempt. It is pegged on receipt of a MAP_UPDATE_LOCATION_AREA service indication, with the previous location area identifier referring to the Location Area identity of a different VLR, or no VLR.(RNC)

Data Source

Call Server

Source Field

attInterVLRLocationUpdates

Source Section

Location Update

attIntraVLRLocationUpdates

Attempted Intra-VLR Location Updates. Pegged at the VLR application for each intra-VLR location update attempt. It is pegged on receipt of a MAP_UPDATE_LOCATION_AREA service indication, with the previous location area identifier referring to the Location Area identity of the same VLR.(RNC)

Data Source

Call Server

Source Field

attIntraVLRLocationUpdates

Source Section

Location Update

attIntraVLRPerioLocationUpdates

Attempted intra-VLR Location Updates (timebased periodical location update). Pegged on the receipt of "LOCATION UPDATING REQUEST" Message from the MS with previous Location Area identification parameter referring to the Location Area identity of the same VLR. (RNC)

Data Source

Call Server

Source Field

VS.attIntraVLRPerioLocationUpdates

Source Section

Location Update

attMobileOriginatingCalls

Pegged when a new mobile originated call attempt is received on the SS7 Device Server, i.e. the DS has received a SETUP request message from the originating UE.(RNC)

Data Source

Call Server

Source Field

attMobileOriginatingCalls

Source Section

Call Setup

attMobileTerminatingCalls

Pegged on the transmission of SETUP message to the called MS for the requested mobile terminating call.(RNC)

Data Source

Call Server

Source Field

attMobileTerminatingCalls

Source Section

Call Setup

attOpForMobileOriginatingPointToPointSMs

Attempted operations for mobile originating point to point SMs. Pegged on receipt of "RP-DATA" Message. (RNC)

Data Source

Call Server

Source Field

attOpForMobileOriginatingPointToPointSMs

Source Section

SMS

attOpForMobileTerminatingPointToPointSMs

Attempted operations for mobile terminating point to point SMs. Pegged on transmission of "RP-DATA" Message.(RNC)

Data Source

Call Server

Source Field

attOpForMobileTerminatingPointToPointSMs

Source Section

SMS

attRoamerCalls

Attempted Roamer Calls. This count shall be pegged for all origination and termination attempts from/to a Roamer UE; when the MSC sends the RAB Assignment Request to the RNC. There will be no AMR subrates assigned to Roamer UE's.

Data Source

Call Server

Source Field

VS.attRoamerCalls

Source Section

AMR Subrates

attTMSIReallocations

Attempted TMSI re-allocations. Pegged on transmission of "TMSI REALLOCATION COMMAND" Message, or a "LOCATION UPDATING ACCEPT" Message where the UE is identified with TMSI.(RNC)

Data Source

Call Server

Source Field

attTMSIReallocations

Source Section

Location Update

Data_Interval

Data interval for the Call Server data collection in seconds. It is taken from "duration" value of the relevant <granPeriod> tag in the Call Server XML data file.

Data Source

Call Server

Source Field

<granPeriod> tag "duration"

estCallsConfig14AMR

Pegged for all HPLMN UE origination and termination attempts assigned IuUP Version 2 AMR subrates when the MSC gets the RAB Assignment Response from the RNC.

Data Source

Call Server

Source Field

VS.estCallsConfig14AMR

Source Section

AMR Subrates

estHomerCallsAMR

Established Homer Calls using AMR Subrates. This count shall be pegged whenever an originating/terminating HPLMN call is successfully established and HPLMN UE is assigned AMR subrates with the following conditions: The AMR subrates feature is enabled for the MSC and Assignment of AMR subrates is allowed by the serving RNC. To be considered successfully established, the RAB Assignment Response message has been received. The call does not have to reach the answer state for this count to be pegged. This count shall not be pegged for a RAB Assignment Response received for a relocations. Note: Subscribers from an Equivalent PLMN are considered homers and can use AMR subrates.

Data Source

Call Server

Source Field

VS.estHomerCallsAMR

Source Section

AMR Subrates

estRoamerCalls

Established Roamer Calls. This count is pegged when an originating/terminating call from/to a Roamer UE is successfully established. This count shall be pegged whenever a successful mobile call attempt has been detected; i.e. the RAB Assignment Response message has been received. The call does not have to reach the answer state for this count to be pegged. Note: There will be no AMR subrates assigned to Roamer UE's.

Data Source

Call Server

Source Field

VS.estRoamerCalls

Source Section

AMR Subrates

externalHDOs

External Handovers. Pegged on receipt of a "RELOCATION REQUIRED" message for MSC controlled Handovers.(RNC)

Data Source

Call Server

Source Field

externalHDOs

Source Section

Handover

imsiAttachProcs

IMSI attach procedures. Pegged on the receipt of "LOCATION UPDATING REQUEST" Message from the MS, indicating an IMSI attach.(RNC)

Data Source

Call Server

Source Field

imsiAttachProcs

Source Section

Location Update

imsiDetachProcs

IMSI detach procedures. Pegged on the receipt of "IMSI DETACH INDICATION" message from the MS(RNC)

Data Source

Call Server

Source Field

imsiDetachProcs

Source Section

Location Update

mobileEmrgcyOrigFailRLSetup

Pegged when a mobile originated call attempt fails due to a Radio Access Bearer (RAB) setup failure (UMTS) or traffic channel setup failure (GSM). For UMTS this count is pegged when the RAB ASSIGNMENT RESPONSE message sent from the RNC indicates if a RAB setup attempt has failed (RAB Failed to Setup or Modify Item IE). For GSM this count is pegged when the ASSIGNMENT FAILURE message sent from the BSC indicates that the traffic channel setup attempt has failed. This does not include a traffic channel setup failure for a Directed Retry Handover. This count is pegged no more than once for each mobile originated emergency call attempt.(RNC)

Data Source

Call Server

Source Field

VS.mobileEmrgcyOrigFailRLSetup

Source Section

Call Setup

mobileOrigAttRejected

Mobile Origination Attempt Rejected. Pegged for a mobile origination attempt that is rejected by the MSC for reasons other than system resource overload related. This includes the following reasons: * The subscriber failed the Identification Procedure on the IMEI resulting in a CM Service Reject being sent to the UE. - This could be a stolen or cloned mobile * The subscriber failed Authentication Procedure because the authentication parameter was out of range * The subscriber failed the Ciphering / Security Procedure(RNC)

Data Source

Call Server

Source Field

VS.mobileOrigAttRejected

Source Section

Call Setup

mobileOrigDroppedRAN

Mobile Origination Dropped - Radio Access Network . Pegged when a mobile originated call is dropped due to a problem in the radio access network. For UMTS this count is pegged on receipt of the RELEASE REQUEST message on the Iu interface which indicates that a dropped call has been detected in the radio access network. For GSM this count is pegged on receipt of the CLEAR REQUEST message on the A-interface which indicates that a dropped call has been detected in the radio access network. If an Inter-MSC Handover completes and then an IU RELEASE REQUEST/CLEAR REQUEST is received by MSC-B MSC-B will forward this message back to MSC-A. In this case MSC-A will release the call and peg the count accordingly. MSC-B also receives the RELEASE or CLEAR REQUEST message but it does not peg the count. This count is pegged no more than once for each mobile originated call attempt that was successfully setup.(RNC)

Data Source

Call Server

Source Field

VS.mobileOrigDroppedRAN

Source Section

Call Setup

mobileOrigFailRLSetup

Mobile Origination Failed Radio Link Setup. Pegged when a mobile originated call attempt fails due to a Radio Access Bearer (RAB) setup failure (UMTS) or traffic channel setup failure (GSM). For UMTS this count is pegged when the RAB ASSIGNMENT RESPONSE message sent from the RNC indicates if a RAB setup attempt has failed (RAB Failed to Setup or Modify Item IE). For GSM this count is pegged when the ASSIGNMENT FAILURE message sent from the BSC indicates that the traffic channel setup attempt has failed. This does not include a traffic channel setup failure for a Directed Retry Handover. This count is pegged no more than once for each mobile originated call attempt. This count is not pegged for mobile emergency originations blocked; there is a separate count for that.(RNC)

Data Source

Call Server

Source Field

VS.mobileOrigFailRLSetup

Source Section

Call Setup

mobileTermAttRejected

Mobile Termination Attempt Rejected. Pegged for a mobile termination attempt that is rejected by the MSC for reasons other than system resource overload related. This includes the following reasons: * The subscriber failed the Identification Procedure on the IMEI resulting in a service reject being sent to the UE. - This could be a stolen or cloned mobile * The subscriber failed Authentication Procedure because the authentication parameter was out of range.(RNC)

Data Source

Call Server

Source Field

VS.mobileTermAttRejected

Source Section

Call Setup

mobileTermDroppedRAN

Mobile Termination Dropped - Radio Access Network. Pegged when a mobile originated call is dropped due to a problem in the radio access network. For UMTS this count is pegged on receipt of the RELEASE REQUEST message on the Iu interface which indicates that a dropped call has been detected in the radio access network. For GSM this count is pegged on receipt of

the CLEAR REQUEST message on the A-interface which indicates that a dropped call has been detected in the radio access network. If an Inter-MSC Handover completes and then an IU RELEASE REQUEST/CLEAR REQUEST is received by MSC-B MSC-B will forward this message back to MSC-A. In this case MSC-A will release the call and peg the count accordingly. MSC-B also receives the RELEASE or CLEAR REQUEST message but it does not peg the count. This count is pegged no more than once for each mobile terminated call attempt that was successfully setup.(RNC)

Data Source

Call Server

Source Field

VS.mobileTermDroppedRAN

Source Section

Call Setup

mobileTermFailRLSetup

Mobile Termination Failed Radio Link Setup. Pegged when a mobile terminated call attempt fails due to a Radio Access Bearer (RAB) setup failure (UMTS) or traffic channel setup failure (GSM). For UMTS this count is pegged when the RAB ASSIGNMENT RESPONSE message sent from the RNC indicates if a RAB setup attempt has failed (RAB Failed to Setup or Modify Item IE). For GSM this count is pegged when the ASSIGNMENT FAILURE message sent from the BSC indicates that the traffic channel setup attempt has failed. This does not include a traffic channel setup failure for a Directed Retry Handover. This count is pegged no more than once for each mobile terminated call attempt(RNC)

Data Source

Call Server

Source Field

VS.mobileTermFailRLSetup

Source Section

Call Setup

MOFailRABRespTO

Pegged when a mobile origination attempt fails due a RAB assignment response timeout. If early handover occurs prior to a RAB assignment response timeout, this count is pegged against the original BSC RNC and not the new BSC RNC.

Data Source

Call Server

Source Field

VS.MOFailRABRespTO

Source Section

Call Setup

MTFailRABRespTO

Pegged when a mobile termination attempt fails due a RAB assignment response timeout.

Data Source

Call Server

Source Field

VS.MTFailRABRespTO

Source Section

Call Setup

noAnsMobileTerminatingCalls

Number of successful mobile termination calls not answered by UE. Pegged on timeout waiting for Connect Req message from UE.(RNC)

Data Source

Call Server

Source Field

VS.noAnsMobileTerminatingCalls

Source Section

Call Setup

SS7LocUpdateAtt

The number of SS7 Location Update Attempt transactions that were received at the SS7 Device Server from the radio network.(RNC)

Data Source

Call Server

Source Field

VS.SS7LocUpdateAtt

Source Section

Location Update

SS7LocUpdateAttSucc

The number of SS7 Location Update Attempt transactions that were received at the SS7 Device Server from the radio network and successfully processed.(RNC)

Data Source

Call Server

Source Field

VS.SS7LocUpdateAttSucc

Source Section

Location Update

succCipheringModeControlProcs

Successful ciphering mode control procedures. Pegged for each successful ciphering mode control procedure attempt. It is pegged on the receipt of the CIPHER MODE COMPLETE message at the 3G-MSC. This count was previously implemented as "succSecurityModeControlProcs", and is pegged for UMTS only.(RNC)

Data Source

Call Server

Source Field

succCipheringModeControlProcs

Source Section

Authorization

succInterVLRLocationUpdates

Successful inter-VLR Location Updates. Pegged for each successful inter-VLR location update attempt. It is pegged on the receipt of a MAP_PROVIDE_ROAMING_NUMBER service confirmation without a 'user error' parameter value for an attempted inter-VLR location update.(RNC)

Data Source

Call Server

Source Field

succInterVLRLocationUpdates

Source Section

Location Update

succIntraVLRLocationUpdates

Successful intra-VLR Location Updates. Pegged for each successful intra-VLR location update attempt. It is pegged on the transmission of a MAP_UPDATE_LOCATION_AREA service response without a 'user error' parameter value for an attempted intra-VLR location update.(RNC)

Data Source

Call Server

Source Field

succIntraVLRLocationUpdates

Source Section

Location Update

succIntraVLRPerioLocationUpdates

Successful intra-VLR Location Updates (timebased periodical location update). Pegged on the transmission of "LOCATION UPDATING ACC" Message to the MS" parameter value, for attempted intra-VLR Location Update.(RNC)

Data Source

Call Server

Source Field

VS.succIntraVLRPerioLocationUpdates

Source Section

Location Update

succMobileOriginatingCalls

Successful mobile originating calls. Pegged on the receipt of the RAB ASSIGNMENT COMPLETE (UMTS) or ASSIGNMENT COMPLETE (GSM) message from the originating UE for the requested mobile originating call.(RNC)

Data Source

Call Server

Source Field

succMobileOriginatingCalls

Source Section

Call Setup

succMobileTerminatingCalls

Successful mobile terminating calls. Pegged on the receipt of a RAB ASSIGNMENT COMPLETE (UMTS) or ASSIGNMENT COMPLETE (GSM) message from the terminating UE for the requested mobile terminating call.(RNC)

Data Source

Call Server

Source Field

succMobileTerminatingCalls

Source Section

Call Setup

succMOForwardSM

The number of Mobile Originated SMS Attempts that have been received at the SS7 Device Server (in the SMS Connection Model on the Iu Interface) that have been successfully processed. (RNC)

Data Source

Call Server

Source Field

VS.succMOForwardSM

Source Section

SMS

succMTForwardSM

The number of Mobile Terminated SMS Attempts that have been received at the SS7 Device Server (in the SMS Relay Layer Task from the SMS Service Center) that have been successfully processed. (RNC)

Data Source

Call Server

Source Field

VS.succMTForwardSM

Source Section

SMS

succOpForMobileOriginatingPointToPointSMs

Successful operations for mobile originating point to point SMs. Pegged on transmission of "RP-ACK" Message.(RNC)

Data Source

Call Server

Source Field

succOpForMobileOriginatingPointToPointSMs

Source Section

SMS

succOpForMobileTerminatingPointToPointSMs

Successful operations for mobile terminating point to point SMs. Pegged on receipt of "RP-ACK" Message.(RNC)

Data Source

Call Server

Source Field

succOpForMobileTerminatingPointToPointSMs

Source Section

SMS

succTMSIReallocations

Successful TMSI re-allocations. Pegged on receipt of "TMSI REALLOCATION COMPLETE" Message.(RNC)

Data Source

Call Server

Source Field

succTMSIReallocations

Source Section

Location Update

transSubIdentifiedWithIMSI

Transactions on the MM-layer where subscriber was identified with IMSI. Pegged for any MM-layer transaction initiated by IMSI, which causes the UE to be identified with his IMSI. I.e. CM_re-establishment, CM_service request, IMSI detach indication, location update request.(RNC)

Data Source

Call Server

Source Field

transSubIdentifiedWithIMSI

Source Section

Location Update

transSubIdentifiedWithTMSI

Transactions on the MM-layer where subscriber was identified with TMSI. Pegged for any MM-layer transaction initiated with a TMSI. I.e. CM_re-establishment, CM_service request, IMSI detach indication, location update request.(RNC)

Data Source

Call Server

Source Field

transSubIdentifiedWithTMSI

Source Section

Location Update

S_CELL_RNC_SAC Primitive Calculations

The following is a list of primitive calculations for the S_CELL_RNC_SAC entity.

GRAPHmultiLineSeparator

Special Control Field for Multi-Line Graphs

Calculation

```
""
```

NUMDAYS

of days in Report

Calculation

```
DAYSINREPORT()
```

NUMHOURS

of hours in Summation Data

Calculation

SAC_CS Primitive Calculations

The following is a list of primitive calculations for the SAC_CS entity.

GRAPHmultiLineSeparator

Special Control Field for Multi-Line Graphs

Calculation

```
""
```

NUMDAYS

of days in Report

Calculation

```
DAYSINREPORT()
```

NUMHOURS

of hours in Summation Data

Calculation

SAC_CS Peg Counts

The following is a list of peg counts for the SAC_CS entity.

Data_Interval

Data interval for the Call Server data collection in seconds. It is taken from "duration" value of the relevant <granPeriod> tag in the Call Server XML data file.

Data Source

Call Server

Source Field

<granPeriod> tag "duration"

mobileOrigDropBeforeAlert_SAC

This count shall be pegged when a mobile originated call attempt (including emergency calls) is dropped or fails for a locally generated reason related to a system error after the bearer channel is allocated but before alerting begins. This includes bearer path setup failure, signalling path failure, or any abnormal release NOT resulting from a message received from the RNC or BSC. This count shall be pegged no more than once for each mobile originated call attempt and shall not be pegged for misdialed numbers, originating mobile hangups or any other originating subscriber related actions.

Data Source

Call Server

Source Field

VS.mobileOrigDropBeforeAlert

Source Section

Call Setup (SAC)

mobileOrigDropBeforeAns_SAC

This count shall be pegged when a mobile originated call attempt (including emergency calls) is dropped or fails for a locally generated reason related to a system error after alerting begins but before answer. This includes bearer path failure, signalling path failure, or any abnormal release NOT resulting from a message received from the RNC or BSC. This count shall be pegged no more than once for each mobile originated call attempt and shall not be pegged for misdialed numbers, originating mobile hangups or any other subscriber related actions.

Data Source

Call Server

Source Field

VS.mobileOrigDropBeforeAns

Source Section

Call Setup (SAC)

mobileOrigDroppedAfterAns_SAC

This count is pegged when a mobile originated call (including mobile emergency calls) is dropped after answer. It is pegged if an internal 3GMSC system error bearer path failure or signalling path failure (including SCCP failure) results in a stable call being dropped. This count is NOT pegged due the receipt of a RELEASE / CLEAR REQUEST message from the RNC / BSS; a separate counts exists for that event. This count is pegged no more than once for each mobile originated call.

Data Source

Call Server

Source Field

VS.mobileOrigDroppedAfterAns

Source Section

Call Setup (SAC)

mobileTermDropBeforeAlert_SAC

This count shall be pegged when a mobile terminated call attempt is dropped or fails for a locally generated reason related to a system error after the bearer channel is allocated but before

alerting begins. This includes bearer path setup failure, signalling path failure or any abnormal release message NOT resulting from a message received from the RNC or BSC. This count shall be pegged no more than once for each mobile terminated call attempt and shall not be pegged for misdialed numbers or any other subscriber related actions.

Data Source

Call Server

Source Field

VS.mobileTermDropBeforeAlert

Source Section

Call Setup (SAC)

mobileTermDropBeforeAns_SAC

This count shall be pegged when a mobile terminated call attempt is dropped or fails for a locally generated reason related to a system error after alerting begins but before answer. This includes bearer path failure, signalling path failure or any abnormal release message NOT resulting from a message received from the RNC or BSC. This count shall be pegged no more than once for each mobile originated call attempt and shall not be pegged for misdialed numbers or any other subscriber related actions.

Data Source

Call Server

Source Field

VS.mobileTermDropBeforeAns

Source Section

Call Setup (SAC)

mobileTermDroppedAfterAns_SAC

This count is pegged when a mobile terminated call (including mobile emergency calls) is dropped after answer. It is pegged if an internal 3GMSC system error bearer path failure or signalling path failure (including SCCP failure) results in a stable call being dropped. This count is NOT be pegged due the receipt of a RELEASE / CLEAR REQUEST message from the RNC / BSS; a separate count exists for that event. This count is pegged no more than once for each mobile terminated call.

Data Source

Call Server

Source Field

VS.mobileTermDroppedAfterAns

Source Section

Call Setup (SAC)

SCCP_DPC Primitive Calculations

The following is a list of primitive calculations for the SCCP_DPC entity.

GRAPHmultiLineSeparator

Special Control Field for Multi-Line Graphs

Calculation

```
""
```

NUMDAYS

of days in Report

Calculation

```
DAYSINREPORT()
```

NUMHOURS

of hours in Summation Data

SCCP_DPC Peg Counts

The following is a list of peg counts for the SCCP_DPC entity.

SS7SCCPConnReqs

The number of SCCP Connection Request transactions that were received at the SS7 Device Server from the radio network.

Data Source

Call Server

Source Field

VS.SS7SCCPConnReqs

Source Section

SS7 SCCP

SS7SCCPConnReqsSucc

The number of SCCP Connection Request transactions that were received at the SS7 Device Server from the radio network and successfully processed.

Data Source

Call Server

Source Field

VS.SS7SCCPConnReqsSucc

Source Section

SS7 SCCP

SCTP_Stack Primitive Calculations

The following is a list of primitive calculations for the SCTP_Stack entity.

GRAPHmultiLineSeparator

Special Control Field for Multi-Line Graphs

Calculation

```
""
```

NUMDAYS

of days in Report

Calculation

```
DAYSINREPORT()
```

NUMHOURS

of hours in Summation Data

SCTP_Stack Peg Counts

The following is a list of peg counts for the SCTP_Stack entity.

sctpAborteds

The number of times that associations have made a direct transition to the CLOSED state from any state using the primitive 'ABORT'. Ungraceful termination of the association.

Data Source

Call Server

Source Field

VS.sctpAborteds

Source Section

SCTP

sctpActiveEstabs

The number of times that associations have made a direct transition to the ESTABLISHED state from the COOKIE-ECHOED state. The upper layer initiated the association attempt

Data Source

Call Server

Source Field

VS.sctpActiveEstabs

Source Section

SCTP

sctpAutocloseExpireds

Pegged when the SCTP AUTOCLOSE timer expires.

Data Source

Call Server

Source Field

VS.sctpAutocloseExpireds

Source Section

SCTP

sctpChecksumErrors

The number of SCTP packets received with an invalid checksum.

Data Source

Call Server

Source Field

VS.sctpChecksumErrors

Source Section

SCTP

sctpCurrEstab

The number of associations for which the current state is either ESTABLISHED, SHUTDOWN-RECEIVED or SHUTDOWN-PENDING. An exception is the tcpCurrEstab count, which is an up-down counter and is not computed by taking the delta of the previous and current value.

Data Source

Call Server

Source Field

VS.sctpCurrEstab

Source Section

SCTP

sctpDelaySackExpireds

Pegged when the SCTP delay sack timer expires.

Data Source

Call Server

Source Field

VS.sctpDelaySackExpireds

Source Section

SCTP

sctpFastRetransmits

Pegged for SCTP fast retransmits.

Data Source

Call Server

Source Field

VS.sctpFastRetransmits

Source Section

SCTP

sctpFragUsrMsgs

The number of user messages that have to be fragmented because of the MTU. This counter is collected from the SIP Server SCTP Linux kernel events shown below. At the end of each reporting period that is synchronised with top of the hour (i.e. hh:00), the MI reads this counter through the SNMP interface, compute the delta from the previously read value, and place the new value in the overall PM XML file which is generated by the MI Agent. The LSS PM infrastructure does not need to provide macros for the pegging of this count.

Data Source

Call Server

Source Field

VS.sctpFragUsrMsgs

Source Section

SCTP

sctpInCtrlChunks

The number of SCTP control chunks received (no duplicate chunks included). This counter is collected from the SIP Server SCTP Linux kernel events shown below. At the end of each reporting period that is synchronised with top of the hour (i.e. hh:00), the MI reads this counter through the SNMP interface, compute the delta from the previously read value, and place the new value in the overall PM XML file which is generated by the MI Agent. The LSS PM infrastructure does not need to provide macros for the pegging of this count.

Data Source

Call Server

Source Field

VS.sctpInCtrlChunks

Source Section

SCTP

sctpInDataChunkDiscards

Pegged for each SCTP incoming data chunk discarded.

Data Source

Call Server

Source Field

VS.sctpInDataChunkDiscards

Source Section

SCTP

sctpInOrderChunks

The number of SCTP ordered data chunks received (no duplicate chunks included). This counter shall be collected from the SIP Server SCTP Linux kernel events shown below. At the end of each reporting period that is synchronised with top of the hour (i.e. hh:00), the MI reads this counter through the SNMP interface, compute the delta from the previously read value, and place the new value in the overall PM XML file which is generated by the MI Agent. The LSS PM infrastructure does not need to provide macros for the pegging of this count.

Data Source

Call Server

Source Field

VS.sctpInOrderChunks

Source Section

SCTP

sctpInPktBacklog

Pegged for each SCTP incoming packet backlog.

Data Source

Call Server

Source Field

VS.sctpInPktBacklog

Source Section

SCTP

sctpInPktDiscards

Pegged for each SCTP incoming packet discarded.

Data Source

Call Server

Source Field

VS.sctpInPktDiscards

Source Section

SCTP

sctpInPktSoftirq

Pegged for SCTP incoming packets soft irg.

Data Source

Call Server

Source Field

VS.sctpInPktSoftirq

Source Section

SCTP

sctpInSCTPPacks

The number of SCTP packets received. Duplicates are included. This counter shall be collected from the SIP Server SCTP Linux kernel events shown below. At the end of each reporting period that is synchronised with top of the hour (i.e. hh:00), the MI reads this counter through the SNMP interface, compute the delta from the previously read value, and place the new value

in the overall PM XML file which is generated by the MI Agent. The LSS PM infrastructure does not need to provide macros for the pegging of this count.

Data Source

Call Server

Source Field

VS.sctpInSCTPPacks

Source Section

SCTP

sctpInUnorderChunks

The number of SCTP unordered chunks(data chunks in which the U bit is set to 1) received (no duplicate chunks included). This counter shall be collected from the SIP Server SCTP Linux kernel events shown below. At the end of each reporting period that is synchronised with top of the hour (i.e. hh:00), the MI reads this counter through the SNMP interface, compute the delta from the previously read value, and place the new value in the overall PM XML file which is generated by the MI Agent. The LSS PM infrastructure does not need to provide macros for the pegging of this count.

Data Source

Call Server

Source Field

VS.sctpInUnorderChunks

Source Section

SCTP

sctpOutCtrlChunks

The number of SCTP control chunks sent (retransmissions are not included). Control chunks are those chunks different from DATA. This counter shall be collected from the SIP Server SCTP Linux kernel events shown below. At the end of each reporting period that is synchronised with top of the hour (i.e. hh:00), the MI reads this counter through the SNMP interface, compute the delta from the previously read value, and place the new value in the overall PM XML file which is generated by the MI Agent. The LSS PM infrastructure does not need to provide macros for the pegging of this count.

Data Source

Call Server

Source Field

VS.sctpOutCtrlChunks

Source Section

SCTP

sctpOutOfBlues

The number of out of the blue packets received by the host. An out of the blue packet is an SCTP packet correctly formed, including the proper checksum, but for which the receiver was unable to identify an appropriate association. This counter is collected from the SIP Server SCTP Linux kernel events shown below. At the end of each reporting period that is synchronised with top of the hour (i.e. hh:00), the MI reads this counter through the SNMP interface, compute the delta from the previously read value, and place the new value in the overall PM XML file which is generated by the MI Agent. The LSS PM infrastructure does not need to provide macros for the pegging of this count.

Data Source

Call Server

Source Field

VS.sctpOutOfBlues

Source Section

SCTP

sctpOutOrderChunks

The number of SCTP ordered data chunks sent (retransmissions are not included). This counter shall be collected from the SIP Server SCTP Linux kernel events shown below. At the end of each reporting period that is synchronised with top of the hour (i.e. hh:00), the MI shall read this counter through the SNMP interface, compute the delta from the previously read value, and place the new value in the overall PM XML file which is generated by the MI Agent. The LSS PM infrastructure does not need to provide macros for the pegging of this count.

Data Source

Call Server

Source Field

VS.sctpOutOrderChunks

Source Section

SCTP

sctpOutSCTPPacks

The number of SCTP packets sent. Retransmitted DATA chunks are included. This counter shall be collected from the SIP Server SCTP Linux kernel events shown below. At the end of each reporting period that is synchronised with top of the hour (i.e. hh:00), the MI shall read this counter through the SNMP interface, compute the delta from the previously read value, and place the new value in the overall PM XML file which is generated by the MI Agent. The LSS PM infrastructure does not need to provide macros for the pegging of this count.

Data Source

Call Server

Source Field

VS.sctpOutSCTPPacks

Source Section

SCTP

sctpOutUnorderChunks

The number of SCTP unordered chunks(data chunks in which the U bit is set to 1) sent (retransmissions are not included). This counter shall be collected from the SIP Server SCTP Linux kernel events shown below. At the end of each reporting period that is synchronised with top of the hour (i.e. hh:00), the MI shall read this counter through the SNMP interface, compute the delta from the previously read value, and place the new value in the overall PM XML file which is generated by the MI Agent. The LSS PM infrastructure does not need to provide macros for the pegging of this count.

Data Source

Call Server

Source Field

VS.sctpOutUnorderChunks

Source Section

SCTP

sctpPassiveEstabs

The number of times that associations have made a direct transition to the ESTABLISHED state from the CLOSED state. The remote endpoint initiated the association attempt. This counter shall be collected from the SIP Server SCTP Linux kernel events shown below. At the end of each reporting period that is synchronised with top of the hour (i.e. hh:00), the MI shall read this counter through the SNMP interface, compute the delta from the previously read value, and place the new value in the overall PM XML file which is generated by the MI Agent. The LSS PM infrastructure does not need to provide macros for the pegging of this count.

Data Source

Call Server

Source Field

VS.sctpPassiveEstabs

Source Section

SCTP

sctpPmtudRetransmits

Pegged for SCTP retransmits with the new pmtu setting.

Data Source

Call Server

Source Field

VS.sctpPmtudRetransmits

Source Section

SCTP

sctpReasmUsrMsgs

The number of user messages reassembled, after conversion into DATA chunks. This counter shall be collected from the SIP Server SCTP Linux kernel events shown below. At the end of each reporting period that is synchronised with top of the hour (i.e. hh:00), the MI shall read this counter through the SNMP interface, compute the delta from the previously read value, and place the new value in the overall PM XML file which is generated by the MI Agent. The LSS PM infrastructure does not need to provide macros for the pegging of this count.

Data Source

Call Server

Source Field

VS.sctpReasmUsrMsgs

Source Section

SCTP

sctpShutdowns

The number of times that associations have made a direct transition to the CLOSED state from either the SHUTDOWN-SENT state or the SHUTDOWN-ACK-SENT state. Graceful termination of the association. This counter shall be collected from the SIP Server SCTP Linux kernel events shown below. At the end of each reporting period that is synchronised with top of the hour (i.e. hh:00), the MI shall read this counter through the SNMP interface, compute the delta from the previously read value, and place the new value in the overall PM XML file which is generated by the MI Agent. The LSS PM infrastructure does not need to provide macros for the pegging of this count.

Data Source

Call Server

Source Field

VS.sctpShutdowns

Source Section

SCTP

sctpT1CookieExpireds

Pegged when the SCTP T1-cookie timer expires.

Data Source

Call Server

Source Field

VS.sctpT1CookieExpireds

Source Section

SCTP

sctpT1InitExpireds

Pegged when the SCTP T1-init timer expires.

Data Source

Call Server

Source Field

VS.sctpT1InitExpireds

Source Section

SCTP

sctpT2ShutdownExpireds

Pegged on retransmissions of the SCTP SHUTDOWN chunk.

Data Source

Call Server

Source Field

VS.sctpT2ShutdownExpireds

Source Section

SCTP

sctpT3Retransmits

Pegged for SCTP T3 Retransmits.

Data Source

Call Server

Source Field

VS.sctpT3Retransmits

Source Section

SCTP

sctpT3RtxExpireds

Pegged when the SCTP T3-rtx timer expires.

Data Source

Call Server

Source Field

VS.sctpT3RtxExpireds

Source Section

SCTP

sctpT4RtoExpireds

Pegged when the SCTP T4 Retransmission Timeout (RTO) timer expires.

Data Source

Call Server

Source Field

VS.sctpT4RtoExpireds

Source Section

SCTP

sctpT5ShutdownGuardExpireds

Pegged when the SCTP T5-shutdown-guard timer expires.

Data Source

Call Server

Source Field

VS.sctpT5ShutdownGuardExpireds

Source Section

SCTP

ServiceMember Primitive Calculations

The following is a list of primitive calculations for the ServiceMember entity.

ansMobileOriginatingCalls

Answered mobile originating calls (sum of UMTS and GSM Technology Types)

Calculation

```
vsum (ansMobileOriginatingCalls_GSM, ansMobileOriginatingCalls_UMTS,
sum(RNC_SM_CS,ansMobileOriginatingCalls),sum(BSC_SM_CS,ansMobileOriginat-
ingCalls), 0)
```

ansMobileTerminatingCalls

Answered mobile terminating calls (sum of UMTS and GSM Technology Types)

Calculation

```
vsum (ansMobileTerminatingCalls_GSM, ansMobileTerminatingCalls_UMTS,
sum(RNC_SM_CS,ansMobileTerminatingCalls), sum(BSC_SM_CS,ansMobileTerminat-
ingCalls), 0)
```

AnsweredMobileOriginationRate

Answered Mobile Origination Rate %

Calculation

```
ansMobileOriginatingCalls * 100.0 / succMobileOriginatingCalls
```

AnsweredMobileTerminationRate

Answered Mobile Termination Rate %

Calculation

```
ansMobileTerminatingCalls * 100.0 / succMobileTerminatingCalls
```

attCipheringModeControlProcs

Attempted ciphering mode control procedures (sum of UMTS and GSM Technology Types)

Calculation

```
vsum (attCipheringModeControlProcs_GSM, attCipheringModeControlProcs_UMTS,
sum(RNC_SM_CS,attCipheringModeControlProcs), sum(BSC_SM_CS,attCipheringMo-
deControlProcs), 0)
```

attFirstPageReqs

Attempted First Pages

Calculation

```
vsum(attFirstPageReqs_M5,sum(Bearer-
Type,vsum(attFirstPageReqs_UMTS,attFirstPageReqs_GSM,attFirstPageReqs_Unkn
own,0)),0)
```

attFirstPageReqsFlood

Attempted First Flood Pages

Calculation

```
vsum(attFirstPageReqsFlood_M5,sum(BearerType,attFirstPageReqsFlood),0)
```

attInterVLRLocationUpdates

Attempted Inter-VLR Location Updates (sum of UMTS and GSM Technology Types)

Calculation

```
vsum (attInterVLRLocationUpdates_GSM, attInterVLRLocationUpdates_UMTS,
sum(RNC_SM_CS,attInterVLRLocationUpdates), sum(BSC_SM_CS,attInterVLRLoca-
tionUpdates), 0)
```

attIntraVLRLocationUpdates

Attempted Intra-VLR Location Updates (sum of UMTS and GSM Technology Types)

Calculation

```
vsum (attIntraVLRLocationUpdates_GSM, attIntraVLRLocationUpdates_UMTS,
sum(RNC_SM_CS,attIntraVLRLocationUpdates), sum(BSC_SM_CS,attIntraVLRLoca-
tionUpdates), 0)
```

attIntraVLRPerioLocationUpdates

Attempted intra-VLR Location Updates (timebased periodical location update) (sum of GSM and UMTS Technology Type)

Calculation

```
vsum(attIntraVLRPerioLocationUpdates_GSM,
attIntraVLRPerioLocationUpdates_UMTS, sum(RNC_SM_CS,attIntraVLRPerioLoca-
tionUpdates), sum(BSC_SM_CS,attIntraVLRPerioLocationUpdates), 0)
```

attMobileEmergencyCalls

Attempted Mobile Emergency calls (sum of UMTS and GSM Technology Types)

Calculation

```
vsum (attMobileEmergencyCalls_GSM, attMobileEmergencyCalls_UMTS, 0)
```

attMobileOriginatingCalls

Attempted mobile originating calls (sum of UMTS and GSM Technology Types)

Calculation

```
vsum (attMobileOriginatingCalls_GSM, attMobileOriginatingCalls_UMTS,
sum(RNC_SM_CS,attMobileOriginatingCalls), sum(BSC_SM_CS,attMobileOriginat-
ingCalls), 0)
```

attMobileTerminatingCalls

Attempted mobile terminating calls (sum of UMTS and GSM Technology Types)

Calculation

```
vsum (attMobileTerminatingCalls_GSM, attMobileTerminatingCalls_UMTS,
sum(RNC_SM_CS,attMobileTerminatingCalls), sum(BSC_SM_CS,attMobileTerminat-
ingCalls), 0)
```

attOpForMobileOriginatingPointToPointSMs

Attempted operations for mobile originating point to point SMs (sum of UMTS and GSM Technology Types)

Calculation

```
vsum (attOpForMobileOriginatingPointToPointSMs_GSM,
attOpForMobileOriginatingPointToPointSMs_UMTS, sum(RNC_SM_CS,attOpForMobi-
leOriginatingPointToPointSMs), sum(BSC_SM_CS,attOpForMobileOriginating-
PointToPointSMs), 0)
```

attOpForMobileTerminatingPointToPointSMs

Attempted operations for mobile terminating point to point SMs (sum of UMTS and GSM Technology Types)

Calculation

```
vsum (attOpForMobileTerminatingPointToPointSMs_GSM,
attOpForMobileTerminatingPointToPointSMs_UMTS, sum(RNC_SM_CS,attOpForMobi-
leTerminatingPointToPointSMs), sum(BSC_SM_CS,attOpForMobileTerminating-
PointToPointSMs), 0)
```

attPageReqs

Attempted page requests

Calculation

```
vsum(attPageReqs_M5,sum(BearerType,attPageReqs),0)
```

attTMSIReallocations

Attempted TMSI re-allocations (Sum of GSM Technology and UMTS Technology Type)

Calculation

```
vsum(attTMSIReallocations_GSM, attTMSIReallocations_UMTS,
sum(RNC_SM_CS,attTMSIReallocations), sum(BSC_SM_CS,attTMSIReallocations),
0)
```

AuthenticationProcedureRequesttoVLR_MSC_SuccessRate

Authentication Procedure Request to VLR/MSC Success Rate %

Calculation

```
succAuthProcsInVLR * 100.0 / attAuthProcsInVLR
```

Updated: 2009-06-23

AuthenticationSetsTransactiontoHLR_SuccessRate

Authentication Sets Transaction to HLR Success Rate %

Calculation

```
succReceivedAuthSetsFromHLR * 100.0 / attReqForAuthSetsSentToHLR
```

aveNEcoreProcCpuUsage

Average Network Element Core Processes CPU Utilization. This count shall collect the average Network Element CPU utilization for the core processes. For each 10-second scan over the course of a report interval, the CPU utilization for the core processes is computed and the result is reported as the Average Core Processes CPU Utilization per equipped host expressed as a percentage.(Renamed to aveBaseCpuUsage in M5.0)

Calculation

```
aveBaseCpuUsage
```

aveNECpuUsage

The average Network Element CPU utilization. For each 10-second scan over the course of a report interval, the Network Element CPU utilization is computed and the result is reported as the Average CPU Utilization Per Network Element expressed as a percentage.(Renamed to aveCpuUsage in M5.0)

Calculation

```
aveCpuUsage
```

CAMEL_DiagloguesSuccessRate

CAMEL Diaglogues Success Rate %

Calculation

```
vsum (camelQueries, -1.0 * camelSSFSystemFailure, -1.0 * camelSCPDetected-
Failure, -1.0 * camelFailureSSFTimeout, 0) * 100.0 / vsum (camelQueries, -
1.0 * camelSubAbandon)
```

CAMEL_SMS_SuccesRate

CAMEL SMS Succes Rate %

Calculation

```
vsum (camelSMSQueries, -1.0 * camelSMSSSFSysFailure, -1.0 * camelSMSSCPDe-
tectedFailure, -1.0 * camelSMSFailureSSFTimeout, 0) * 100.0 / camelSMSQue-
ries
```

CipheringModeControlProceduresSuccessRate

Ciphering Mode Control Procedures Success Rate %

Calculation

```
succCipheringModeControlProcs * 100.0 / attCipheringModeControlProcs
```

CSDCallSyncFailure

Counter moved to "IWF_GW_CS" entity fr 4.1.7.0.0. This count is pegged when a CSD call is abnormally released due to a synchronization failure i.e the MSC clears the call after the IWF sends H.248 error code 910.

Calculation

```
vsum(CSDCallSyncFailure_RP6,sum(IWF_GW_CS,CSDCallSyncFailure))
```

exceptionCard

New name: exceptionService. All card exceptions that have occurred on the particular card on the SSP Shelf .

Calculation

```
exceptionService
```

externalHDOs

External Handovers (sum of GSM Technology and UMTS Technology Type)

Calculation

```
vsum(externalHDOs_GSM, externalHDOs_UMTS, sum(RNC_SM_CS,externalHDOs),
sum(BSC_SM_CS,externalHDOs), 0)
```

FloodPageSuccessRate

Flood Page Success Rate %

Calculation

```
vsum (succFirstPageReqsFlood, succSecondPageReqsFlood, 0) * 100.0 /
attFirstPageReqsFlood
```

GRAPHmultiLineSeparator

Special Control Field for Multi-Line Graphs

Calculation

```
""
```

GSM_MO_14K4CSD_SuccessRate

GSM Mobile-Originated 14.4K CSD Success Rate %

Calculation

```
ansMobOrig14KCSDCall * 100.0 / attMobOrig14KCSDCall
```

Updated: 2009-06-23

GSM_MO_9K6CSD_SuccessRate

GSM Mobile-Originated 9.6K CSD Success Rate %

Calculation

```
ansMobOrig9KCSDCall * 100.0 / attMobOrig9KCSDCall
```

imsiAttachProcs

IMSI attach procedures (sum of GSM and UMTS Technology Type)

Calculation

```
vsum(imsiAttachProcs_GSM, imsiAttachProcs_UMTS, sum(RNC_SM_CS,imsiAttach-
Procs), sum(BSC_SM_CS,imsiAttachProcs), 0)
```

imsiDetachProcs

IMSI detach procedures (sum of GSM and UMTS Technology Type)

Calculation

```
vsum(imsiDetachProcs_GSM, imsiDetachProcs_UMTS, sum(RNC_SM_CS,imsiDetach-
Procs), sum(BSC_SM_CS,imsiDetachProcs), 0)
```

InsertSubscriberDataServiceSuccessRate

Insert Subscriber Data Service Success Rate %

Calculation

```
succInsertSubDataService * 100.0 / attInsertSubDataService
```

InterVLR_LocationUpdateSuccessRate

Inter-VLR Location Update Success Rate %

Calculation

```
succInterVLRLocationUpdates * 100.0 / attInterVLRLocationUpdates
```

IntraVLR_LocationUpdateSuccessRate

Intra-VLR Location Update Success Rate %

Calculation

```
succIntraVLRLocationUpdates * 100.0 / attIntraVLRLocationUpdates
```

MobileCallAttempts

Mobile Call Attempts

Calculation

```
vsum (attMobileOriginatingCalls, attMobileTerminatingCalls, attMobileEmer-
gencyCalls, 0)
```

MobileEmergencySuccessRate

Mobile Emergency Success Rate %

Calculation

```
succMobileEmergencyCalls * 100.0 / attMobileEmergencyCalls
```

mobileEmrgcyOrigFailRLSetup

This count is pegged when a mobile originated call attempt fails due to a Radio Access Bearer (RAB) setup failure (UMTS) or traffic channel setup failure (GSM). For UMTS this count is pegged when the RAB ASSIGNMENT RESPONSE message sent from the RNC indicates if a RAB setup attempt has failed (RAB Failed to Setup or Modify Item IE). For GSM this count is pegged when the ASSIGNMENT FAILURE message sent from the BSC indicates that the traffic channel setup attempt has failed. This does not include a traffic channel setup failure for a Directed Retry Handover. This count is pegged no more than once for each mobile originated emergency call attempt.(Sum of GSM and UMTS Technology Type)

Calculation

```
vsum(mobileEmrgcyOrigFailRLSetup_GSM, mobileEmrgcyOrigFailRLSetup_UMTS,
sum(RNC_SM_CS,mobileEmrgcyOrigFailRLSetup), sum(BSC_SM_CS,mobileEmrgcy-
OrigFailRLSetup), 0)
```

mobileOrigAttRejected

This count is pegged for a mobile origination attempt that is rejected by the MSC for reasons other than system resource overload related. This includes the following reasons: * The subscriber failed the Identification Procedure on the IMEI resulting in a CM Service Reject being sent to the UE. - This could be a stolen or cloned mobile * The subscriber failed Authentication Procedure because the authentication parameter was out of range * The subscriber failed the Ciphering / Security Procedure (sum of GSM and UMTS Technology Type)

Calculation

```
vsum(mobileOrigAttRejected_GSM, mobileOrigAttRejected_UMTS,
sum(RNC_SM_CS,mobileOrigAttRejected), sum(RNC_SM_CS, mobileOrigAt-
tRejected), 0)
```

mobileOrigDroppedRAN

This count is pegged when a mobile originated call is dropped due to a problem in the radio access network. For UMTS this count is pegged on receipt of the RELEASE REQUEST message on the Iu interface which indicates that a dropped call has been detected in the radio access network. For GSM this count is pegged on receipt of the CLEAR REQUEST message on the A-interface which indicates that a dropped call has been detected in the radio access

network. If an Inter-MSC Handover completes and then an IU RELEASE REQUEST/CLEAR REQUEST is received by MSC-B MSC-B will forward this message back to MSC-A. In this case MSC-A will release the call and peg the count accordingly. MSC-B also receives the RELEASE or CLEAR REQUEST message but it does not peg the count. This count is pegged no more than once for each mobile originated call attempt that was successfully setup. (sum 0f GSM and UMTS Technoloyg Type)

Calculation

```
vsum(mobileOrigDroppedRAN_GSM, mobileOrigDroppedRAN_UMTS,
sum(RNC_SM_CS,mobileOrigDroppedRAN), sum(BSC_SM_CS,mobileOrigDroppedRAN),
0)
```

mobileOrigFailRLSetup

This count is pegged when a mobile originated call attempt fails due to a Radio Access Bearer (RAB) setup failure (UMTS) or traffic channel setup failure (GSM). For UMTS this count is pegged when the RAB ASSIGNMENT RESPONSE message sent from the RNC indicates if a RAB setup attempt has failed (RAB Failed to Setup or Modify Item IE). For GSM this count is pegged when the ASSIGNMENT FAILURE message sent from the BSC indicates that the traffic channel setup attempt has failed. This does not include a traffic channel setup failure for a Directed Retry Handover. This count is pegged no more than once for each mobile originated call attempt. This count is not pegged for mobile emergency originations blocked; there is a separate count for that.(sum f GSM and UMTS Technoloyg Type)

Calculation

```
vsum(mobileOrigFailRLSetup_GSM, mobileOrigFailRLSetup_UMTS,
sum(RNC_SM_CS,mobileOrigFailRLSetup), sum(BSC_SM_CS,mobileOrigFail-
RLSetup), 0)
```

MobileOriginationSuccessRate

Mobile Origination Success Rate %

Calculation

```
succMobileOriginatingCalls * 100.0 / attMobileOriginatingCalls
```

mobileTermAttRejected

This count is pegged for a mobile termination attempt that is rejected by the MSC for reasons other than system resource overload related. This includes the following reasons: * The subscriber failed the Identification Procedure on the IMEI resulting in a service reject being sent to the UE. - This could be a stolen or cloned mobile * The subscriber failed Authentication Procedure because the authentication parameter was out of range.(sum of GSM and UMTS Technology Type)

Calculation

```
vsum(mobileTermAttRejected_GSM, mobileTermAttRejected_UMTS,
sum(RNC_SM_CS,mobileTermAttRejected), sum(BSC_SM_CS,mobileTermAt-
tRejected), 0)
```

mobileTermDroppedRAN

This count is pegged when a mobile originated call is dropped due to a problem in the radio access network. For UMTS this count is pegged on receipt of the RELEASE REQUEST message on the Iu interface which indicates that a dropped call has been detected in the radio access network. For GSM this count is pegged on receipt of the CLEAR REQUEST message on the A-interface which indicates that a dropped call has been detected in the radio access network. If an Inter-MSC Handover completes and then an IU RELEASE REQUEST/CLEAR REQUEST is received by MSC-B MSC-B will forward this message back to MSC-A. In this case MSC-A will release the call and peg the count accordingly. MSC-B also receives the RELEASE or CLEAR REQUEST message but it does not peg the count. This count is pegged no more than once for each mobile terminated call attempt that was successfully setup.(sum of GSM and UMTS Technology Type)

Calculation

```
vsum(mobileTermDroppedRAN_GSM, mobileTermDroppedRAN_UMTS,
sum(RNC_SM_CS,mobileTermDroppedRAN), sum(BSC_SM_CS,mobileTermDroppedRAN),
0)
```

mobileTermFailRLSetup

This count is pegged when a mobile terminated call attempt fails due to a Radio Access Bearer (RAB) setup failure (UMTS) or traffic channel setup failure (GSM). For UMTS this count is pegged when the RAB ASSIGNMENT RESPONSE message sent from the RNC indicates if a RAB setup attempt has failed (RAB Failed to Setup or Modify Item IE). For GSM this count is pegged when the ASSIGNMENT FAILURE message sent from the BSC indicates that the traffic channel setup attempt has failed. This does not include a traffic channel setup failure for a Directed Retry Handover. This count is pegged no more than once for each mobile terminated call attempt.(sum of GSM and UMTS Technology Type)

Calculation

```
vsum(mobileTermFailRLSetup_GSM, mobileTermFailRLSetup_UMTS,
sum(RNC_SM_CS,mobileTermFailRLSetup), sum(BSC_SM_CS,mobileTermFail-
RLSetup), 0)
```

MobileTerminationSuccessRate

Mobile Termination Success Rate %

Calculation

```
succMobileTerminatingCalls * 100.0 / attMobileTerminatingCalls
```

noAnsMobileTerminatingCalls

Number of successful mobile termination calls not answered by UE (sum of GSM and UMTS Technology Type)

Calculation

```
vsum(noAnsMobileTerminatingCalls_GSM, noAnsMobileTerminatingCalls_UMTS,
sum(RNC_SM_CS,noAnsMobileTerminatingCalls), sum(BSC_SM_CS,noAnsMobileTer-
minatingCalls), 0)
```

NUMDAYS

of days in Report

Calculation

```
DAYSINREPORT()
```

NUMHOURS

of hours in Summation Data

Calculation

OverallLocationUpdateSuccessRate

Overall Location Update Success Rate %

Calculation

```
vsum (succInterVLRLocationUpdates, succIntraVLRLocationUpdates, 0) * 100.0
/ vsum (attInterVLRLocationUpdates, attIntraVLRLocationUpdates)
```

OverallMobileSetupSuccessRate

Overall Mobile Setup Success Rate %

Calculation

```
vsum (succMobileOriginatingCalls, succMobileTerminatingCalls, succMobil-
eEmergencyCalls, 0) * 100.0 / vsum (attMobileOriginatingCalls, attMobile-
TerminatingCalls, attMobileEmergencyCalls)
```

PagingSuccessRate

Paging Success Rate %

Calculation

```
vsum (succFirstPageReqs, succSecondPageReqsReg, 0) * 100.0 / attFirst-
PageReqs
```

peakNEcoreProcCpuUsage

Peak Network Element Core Processes CPU Utilization. This count shall collect the peak Network Element CPU utilization for the core processes. For each 10-second scan over the course of a report interval, the peak CPU utilization for the core processes is captured per

equipped host and reported as the Peak Core Processes CPU Utilization expressed as a percentage.(Renamed to peakBaseCpuUsage in M5.0)

Calculation

```
peakBaseCpuUsage
```

peakNECpuUsage

Peak processor utilization of Network Element processors. For each 10-second scan over the course of a report interval, the Peak Network Element CPU utilization is captured and reported as the Peak CPU Utilization Per Network Element.(Renamed to paekCpuUsage in M5.0)

Calculation

```
peakCpuUsage
```

reInitCardManual

New name: reInitServiceManual. All manually initiated card initializations that have occurred on the particular card on the SSP Shelf .

Calculation

```
reInitServiceManual
```

reInitCardSelf

New name:reInitServiceSelf.This is the count of card initializations

Calculation

```
reInitServiceSelf
```

RequestforMSRN_SuccessRate

Request for MSRN Success Rate %

Calculation

```
succReqForMSRN * 100.0 / attReqForMSRN
```

SecurityModeSuccessRate

Security Mode Success Rate %

Calculation

```
vsum (succCipheringModeControlProcs_GSM,
succCipheringModeControlProcs_UMTS, 0) * 100.0 / vsum
(attCipheringModeControlProcs_GSM, attCipheringModeControlProcs_UMTS)
```

SS7IncomingMSUDiscarded

Incoming MSUs that could not be parsed or was discarded due to invalid content of message.

Calculation

```
vsum(SS7IncomingMSUDiscarded_0302, sum(Link-
Set.Link,SS7IncomingMSUDiscarded))
```

SS7LocUpdateAtt

SS7 Device Server Location Update Attempts

Calculation

```
vsum(SS7LocUpdateAtt_M5, sum(RNC_SM_CS,SS7LocUpdateAtt),
sum(BSC_SM_CS,SS7LocUpdateAtt), 0)
```

SS7LocUpdateAttSucc

SS7 Device Server Location Update Attempts Successfully Completed

Calculation

```
vsum(SS7LocUpdateAttSucc_M5, sum(RNC_SM_CS,SS7LocUpdateAttSucc),
sum(BSC_SM_CS,SS7LocUpdateAttSucc), 0)
```

SS7MSUReTransmitted

Counter moved to "Link" entity fr 4.1.7.0.0. The number of MSUs retransmitted by the Device Server over outgoing links to the network.

Calculation

```
vsum(SS7MSUReTransmitted_RP6,sum(LinkSet.Link,SS7MSUReTransmitted))
```

SS7SCCPConnReqs

SS7 Device Server SCCP Connection Requests

Calculation

```
vsum(SS7SCCPConnReqs_M5, sum(MTP_Stack.SCCP_DPC,SS7SCCPConnReqs), 0)
```

SS7SCCPConnReqsSucc

SS7 Device Server SCCP Connection Requests Successfully Completed

Calculation

```
vsum(SS7SCCPConnReqsSucc_M5, sum(MTP_Stack.SCCP_DPC, SS7SCCPConnReqsSucc),
0)
```

succCipheringModeControlProcs

Successful ciphering mode control procedures (sum of UMTS and GSM Technology Types)

Calculation

```
vsum (succCipheringModeControlProcs_GSM,
succCipheringModeControlProcs_UMTS, sum(RNC_SM_CS,succCipheringModeCon-
trolProcs), sum(BSC_SM_CS,succCipheringModeControlProcs), 0)
```

SuccessfulSMS_ReceivedRate

Successful SMS Received Rate %

Calculation

```
succOpForMobileTerminatingPointToPointSMs * 100.0 / attOpForMobileTerminat-
ingPointToPointSMs
```

SuccessfulSMS_SentRate

Successful SMS Sent Rate %

Calculation

```
succOpForMobileOriginatingPointToPointSMs * 100.0 / attOpForMobileOriginat-
ingPointToPointSMs
```

SuccessfulSubscriberProgrammedUSSD_Rate

Successful Subscriber Programmed USSD Rate %

Calculation

```
vsum (succSSRelatedOperationsInHLR, succLayer3TransportSSMessagesToRNC, 0)
* 100.0 / vsum (attSSRelatedOperationsInHLR,
attLayer3TransportSSMessagesFromRNC)
```

succFirstPageReqs

Successful first page requests

Calculation

```
vsum(succFirstPageReqs_M5,sum(Bearer-
Type,vsum(succFirstPageReqs_UMTS,succFirstPageReqs_GSM,succFirstPageReqs_U
nknown,0)),0)
```

succFirstPageReqsFlood

Successful First Flood pages

Calculation

```
vsum(succFirstPageReqsFlood_M5,sum(BearerType,succFirstPageReqsFlood),0)
```

succInterVLRLocationUpdates

Successful inter-VLR Location Updates (sum of UMTS and GSM Technology Types)

Calculation

```
vsum (succInterVLRLocationUpdates_GSM, succInterVLRLocationUpdates_UMTS,
sum(RNC_SM_CS,succInterVLRLocationUpdates), sum(BSC_SM_CS,succInterVLRLo-
cationUpdates), 0)
```

succIntraVLRLocationUpdates

Successful intra-VLR Location Updates (sum of UMTS and GSM Technology Types)

Calculation

```
vsum (succIntraVLRLocationUpdates_GSM, succIntraVLRLocationUpdates_UMTS,
sum(RNC_SM_CS,succIntraVLRLocationUpdates), sum(BSC_SM_CS,succIntraVLRLo-
cationUpdates), 0)
```

succIntraVLRPerioLocationUpdates

Successful intra-VLR Location Updates (timebased periodical location update) (sum of GSM and UMTS Technology Type)

Calculation

```
vsum(succIntraVLRPerioLocationUpdates_GSM,
succIntraVLRPerioLocationUpdates_UMTS, sum(RNC_SM_CS,succIntraVLRPerioLo-
cationUpdates), sum(BSC_SM_CS,succIntraVLRPerioLocationUpdates), 0)
```

succMobileEmergencyCalls

Successful Mobile Emergency calls (sum of UMTS and GSM Technology Types)

Calculation

```
vsum (succMobileEmergencyCalls_GSM, succMobileEmergencyCalls_UMTS, 0)
```

succMobileOriginatingCalls

Successful mobile originating calls (sum of UMTS and GSM Technology Types)

Calculation

```
vsum (succMobileOriginatingCalls_GSM, succMobileOriginatingCalls_UMTS,
sum(RNC_SM_CS,succMobileOriginatingCalls), sum(BSC_SM_CS,succMobileOrigi-
natingCalls), 0)
```

succMobileTerminatingCalls

Successful mobile terminating calls (sum of UMTS and GSM Technology Types)

Calculation

```
vsum (succMobileTerminatingCalls_GSM, succMobileTerminatingCalls_UMTS,
sum(RNC_SM_CS,succMobileTerminatingCalls), sum(BSC_SM_CS,succMobileTermi-
natingCalls), 0)
```

succMOForwardSM

The number of total Mobile Originated SMS Attempts that have been received at the SS7 Device Server (in the SMS Connection Model on the Iu Interface) that have been successfully processed.

Calculation

```
vsum(succMOForwardSM_RP7P15, succMOForwardSM_GSM, succMOForwardSM_UMTS,
sum(RNC_SM_CS,succMOForwardSM), sum(BSC_SM_CS,succMOForwardSM), 0)
```

succMTForwardSM

The number of total Mobile Terminated SMS Attempts that have been received at the SS7 Device Server (in the SMS Relay Layer Task from the SMS Service Center) that have been successfully processed.

Calculation

```
vsum(succMTForwardSM_RP7P15, succMTForwardSM_GSM, succMTForwardSM_UMTS,
sum(RNC_SM_CS,succMTForwardSM), sum(BSC_SM_CS,succMTForwardSM), 0)
```

succOpForMobileOriginatingPointToPointSMs

Successful operations for mobile originating point to point SMs (sum of UMTS and GSM Technology Types)

Calculation

```
vsum (succOpForMobileOriginatingPointToPointSMs_GSM,
succOpForMobileOriginatingPointToPointSMs_UMTS, sum(RNC_SM_CS,succOpForMo-
bileOriginatingPointToPointSMs), sum(BSC_SM_CS,succOpForMobileOriginating-
PointToPointSMs), 0)
```

succOpForMobileTerminatingPointToPointSMs

Successful operations for mobile terminating point to point SMs (sum of UMTS and GSM Technology Types)

Calculation

```
vsum (succOpForMobileTerminatingPointToPointSMs_GSM,
succOpForMobileTerminatingPointToPointSMs_UMTS, sum(RNC_SM_CS,succOpForMo-
bileTerminatingPointToPointSMs), sum(BSC_SM_CS, succOpForMobileTerminat-
ingPointToPointSMs), 0)
```

succPageReqs

Successful page requests

Calculation

```
vsum(succPageReqs_M5,sum(BearerType,succPageReqs),0)
```

Updated: 2009-06-23

succSecondPageReqsFlood

Successful 2nd page requests at VLR (flood paging)

Calculation

```
vsum(succSecondPageReqsFlood_M5,sum(BearerType,succSecondPageReqsFlood),0)
```

succSecondPageReqsReg

Successful 2nd page requests at VLR (regular paging)

Calculation

```
vsum(succSecondPageReqsReg_M5,sum(BearerType,vsum(succSecondPageReqsReg_UM
TS,succSecondPageReqsReg_GSM,succSecondPageReqsReg_Unknown,0)),0)
```

succTMSIReallocations

Successful TMSI re-allocations (sum of GSM Technology and UMTS Technology Type)

Calculation

```
vsum(succTMSIReallocations_GSM, succTMSIReallocations_UMTS,
sum(RNC_SM_CS,succTMSIReallocations), sum(BSC_SM_CS,succTMSIRealloca-
tions), 0)
```

SupplementaryServiceOperationsSuccessRate

Supplementary Service Operations Success Rate %

Calculation

```
succSSRelatedOperationsInHLR * 100.0 / attSSRelatedOperationsInHLR
```

ThrottledCallRate

Throttled Call Rate %

Calculation

```
vsum (throttleMobileOrigCalls, throttleLocalCongestIncCalls, 0) * 100.0 /
vsum (attMobileOriginatingCalls, attMobileTerminatingCalls, attMobileEmer-
gencyCalls, ChannelGroup.InCallAtt, ChannelGroup.OutCallAtt)
```

transSubIdentifiedWithIMSI

Transactions on the MM-layer where subscriber was identified with IMSI (sum of GSM Technology and UMTS Technology Type)

Calculation

```
vsum(transSubIdentifiedWithIMSI_GSM, transSubIdentifiedWithIMSI_UMTS,
sum(RNC_SM_CS,transSubIdentifiedWithIMSI), sum(BSC_SM_CS,transSubIdenti-
fiedWithIMSI), 0)
```

transSubIdentifiedWithTMSI

Transactions on the MM-layer where subscriber was identified with TMSI (sum of GSM Technology and UMTS Technology Type)

Calculation

```
vsum(transSubIdentifiedWithTMSI_GSM, transSubIdentifiedWithTMSI_UMTS,
sum(RNC_SM_CS,transSubIdentifiedWithTMSI), sum(BSC_SM_CS,transSubIdenti-
fiedWithTMSI), 0)
```

UMTS_MO_64K_CSD_SuccessRate

UMTS Mobile-Originated 64K CSD Success Rate %

Calculation

```
ansMobOrig64KCSDCall * 100.0 / attMobOrig64KCSDCall
```

UMTS_MT_64K_CSD_SuccessRate

UMTS Mobile-Terminated 64K CSD Success Rate %

Calculation

```
ansMobTerm64KCSDCall * 100.0 / accMobTerm64KCSDCall
```

unsuccExternalHDOsWithLossOfConnectionPerMSC_GSM

New name:unsuccExternHDOsWithLossOfConnectionPerMSC_GSM.Unsuccessful External Handovers with Loss of Connection (GSM Technology Type)

Calculation

```
unsuccExternHDOsWithLossOfConnectionPerMSC_GSM
```

unsuccExternalHDOsWithLossOfConnectionPerMSC_UMTS

New name:unsuccExternHDOsWithLossOfConnectionPerMSC_UMTS.Unsuccessful External Handovers with Loss of Connection (UMTS Technology Type)

Calculation

```
unsuccExternHDOsWithLossOfConnectionPerMSC_UMTS
```

unsuccExternalHDOsWithReconnectionPerMSC_GSM

New name:unsuccExternHDOsWithReconnectionPerMSC_GSM.Unsuccessful External Handovers with Reconnection to Old Channels (GSM Technology Type)

Calculation

```
unsuccExternHDOsWithReconnectionPerMSC_GSM
```

unsuccExternalHDOsWithReconnectionPerMSC_UMTS

New name:unsuccExternHDOsWithReconnectionPerMSC_UMTS.Unsuccessful External Handovers with Reconnection to Old Channels (UMTS Technology Type)

Calculation

```
unsuccExternHDOsWithReconnectionPerMSC_UMTS
```

ServiceMember Peg Counts

The following is a list of peg counts for the ServiceMember entity.

accMobTerm64KCSDCall

Number of 64K CSD mobile terminations accepted attempt, i.e. when the 3G-MSC receives the RANAP CALL CONFIRM message for UMTS 64 K Circuit Switched Data (CSD) call towards the destination.

Data Source

Call Server

Source Field

VS.accMobTerm64KCSDCall

Source Section

Circuit Switched Data

AcgAinAutoBlk

Number of times a query was blocked due to an SCP Overload Control.

Data Source

Call Server

Source Field

VS.AcgAinAutoBlk

Source Section

Advanced Intelligent Networking

AcgAinAutoOvfl

Number of times that the SCP requested that an SCP Overload (i.e., an automatic) control be added to the control list, but there was no room in the list.

Data Source

Call Server

Source Field

VS.AcgAinAutoOvfl

Source Section

Advanced Intelligent Networking

AcgAinCtrlAct

This counter accumulates the total number of times a request was received to add, change, or delete a control. This is a combined counter used for requests for both the SCP Overload and SMS Originated controls.

Data Source

Call Server

Source Field

VS.AcgAinCtrlAct

Source Section

Advanced Intelligent Networking

AcgAinManBlk

Number of times a query was blocked due to an SMS Originated Code Control.

Data Source

Call Server

Source Field

VS.AcgAinManBlk

Source Section

Advanced Intelligent Networking

AcgAinManOvfl

Number of times that the SCP requested that an SMS Originated (i.e., a manual) Code Control be added to the control list, but there was no room in the list.

Data Source

Call Server

Source Field

VS.AcgAinManOvfl

Source Section

Advanced Intelligent Networking

ain8yyNetBusy

Query controlled due to ACG .The AIN Services Function shall peg this count when the query fails due to a network management ACG control.

Data Source

Call Server

Source Field

VS.ain8yyNetBusy

Source Section

Advanced Intelligent Networking

ain8yyQueries

This measurement is pegged each time an AIN 8YY query is successfully sent to the SCP.

Data Source

Call Server

Source Field

VS.ain8yyQueries

Source Section

Advanced Intelligent Networking

ain8yyResponses

This is the count of valid responses received in reply to the AIN 8YY query. Valid responses include Analyze_Route, Continue, Disconnect, and Send_To_Resource messages.

Data Source

Call Server

Source Field

VS.ain8yyResponses

Source Section

Advanced Intelligent Networking

ain8yySigFail

This is incremented for each 8yy query that fails to due to a signaling failure.

Data Source

Call Server

Source Field

VS.ain8yySigFail

Source Section

Advanced Intelligent Networking

ain8yyTimeOut

This is the count of 8YY queries that encountered time out of the AIN T1 timer.

Data Source

Call Server

Source Field

VS.ain8yyTimeOut

Source Section

Advanced Intelligent Networking

ainLNPBadData

No vendor documentation could be found for this metric.

Data Source

Call Server

Source Field

VS.ainLNPBadData

Source Section

Local Number Portability

ainLNPPortedCalls

The number of LNP query responses that contain a valid LRN (i.e., CalledPartyID not equal to the dialed number).

Data Source

Call Server

Source Field

VS.ainLNPPortedCalls

Source Section

Number Portability

ainLNPQueries

The AIN Services Function shall peg this measurement when an LNP query is sent for a call.

Data Source

Call Server

Source Field

VS.ainLNPQueries

Source Section

Number Portability

ainLNPQueryFail

The number of calls encountering an LNP trigger that result in an LNP SCP query failure.

Data Source

Call Server

Source Field

VS.ainLNPQueryFail

Source Section

Number Portability

ainLNPVacantDonor

No vendor documentation could be found for this metric.

Data Source

Call Server

Source Field

VS.ainLNPVacantDonor

Source Section

Local Number Portability

ainLNPVacantHome

No vendor documentation could be found for this metric.

Data Source

Call Server

Source Field

VS.ainLNPVacantHome

Source Section

Local Number Portability

allocableMemResrvd

Percentage of Allocable Memory that is Reserved. This count shall represent the percentage size of allocable memory that is reserved for LCP diskless services. This value shall report the size of the reserved block in the memory manager expressed as a percent of the total allocable memory. The percentage of reserved allocable memory shall be sampled on 5 minute intervals, the samples averaged across the reporting interval and the result reported in this count. This data shall be collected at the same point in code where other memory utilization measurements are taken.

Data Source

Call Server

Source Field

VS.allocableMemResrvd

Source Section

Capacity Engineering

alrmCritical

This is the count of all critical alarms that have been generated for a particular card or particular host.

Data Source

Call Server

Source Field

VS.alrmCritical

Source Section

Switch Health

alrmMajor

This is the count of all major alarms that have been generated for a particular card or particular host.

Data Source

Call Server

Source Field

VS.alrmMajor

Source Section

Switch Health

alrmMinor

This is the count of all minor alarms that have been generated for a particular card or particular host.

Data Source

Call Server

Source Field

VS.alrmMinor

Source Section

Switch Health

alrmWarning

This is the count of all warning level alarms that have been generated for a particular card or particular host.

Data Source

Call Server

Source Field

VS.alrmWarning

Source Section

Switch Health

AnalyzdINVOKESent

WIN AnalyzedInformation Invoke Sent

Data Source

Call Server

Source Field

VS.AnalyzdINVOKESent

Source Section

Packet Gateway ANSI-41 Call Delivery

AnalyzdINVREJRcvd

The Feature Server receives a Reject message from the SCP in response to an AnalyzedInformation Invoke message.

Data Source

Call Server

Source Field

VS.AnalyzdINVREJRcvd

Source Section

Packet Gateway ANSI-41 Call Delivery

AnalyzdINVRETError

The Feature Server receives a Return Error message from the SCP in response to an AnalyzedInformation Invoke message.

Data Source

Call Server

Source Field

VS.AnalyzdINVRETError

Source Section

Packet Gateway ANSI-41 Call Delivery

AnalyzdMsgRouteFail

The Feature Server receives a Route Failure from the SS7 Device Server in response to an AnalyzedInformation Invoke message.

Data Source

Call Server

Source Field

VS.AnalyzdMsgRouteFail

Source Section

Packet Gateway ANSI-41 Call Delivery

AnalyzdMsgTO

The Feature Server times-out waiting for a response from the SCP after sending a AnalyzedInformation Invoke message to the SCP.

Data Source

Call Server

Source Field

VS.AnalyzdMsgTO

Source Section

Packet Gateway ANSI-41 Call Delivery

ansMobileEmergencyCalls_GSM

Answered Mobile Emergency calls (GSM Technology Type)

Data Source

Call Server

Source Field

ansMobileEmergencyCalls

Source Section

Per SS7 Service Member, Per Technology Type

ansMobileEmergencyCalls_UMTS

Answered Mobile Emergency calls (UMTS Technology Type)

Data Source

Call Server

Source Field

ansMobileEmergencyCalls

Source Section

Per SS7 Service Member, Per Technology Type

ansMobileOriginatingCalls_GSM

Answered mobile originating calls (GSM Technology Type)

Data Source

Call Server

Source Field

ansMobileOriginatingCalls

Source Section

Mobile Call Setup (GSM)

ansMobileOriginatingCalls_UMTS

Answered mobile originating calls (UMTS Technology Type)

Data Source

Call Server

Source Field

ansMobileOriginatingCalls

Source Section

Mobile Call Setup (UMTS)

ansMobileTerminatingCalls_GSM

Answered mobile terminating calls (GSM Technology Type)

Data Source

Call Server

Source Field

ansMobileTerminatingCalls

Source Section

Mobile Call Setup (GSM)

ansMobileTerminatingCalls_UMTS

Answered mobile terminating calls (UMTS Technology Type)

Data Source

Call Server

Source Field

ansMobileTerminatingCalls

Source Section

Mobile Call Setup (UMTS)

ansMobOrig14KCSDCall

GSM Answered Mobile Originated 14.4 K CSD Calls

Data Source

Call Server

Source Field

VS.ansMobOrig14KCSDCall

Source Section

Circuit Switched Data

ansMobOrig64KCSDCall

UMTS Answered Mobile Origination 64K CSD Calls

Data Source

Call Server

Source Field

VS.ansMobOrig64KCSDCall

Source Section

Circuit Switched Data

ansMobOrig9KCSDCall

GSM Answered Mobile Originated 9.6 K CSD Calls

Data Source

Call Server

Source Field

VS.ansMobOrig9KCSDCall

Source Section

Circuit Switched Data

ansMobOrigFAXCall

This count shall be pegged at the SS7 application when the MSC receives a CONNECT ACK message from the MS after the IWF answered the GSM FAX call. This count is pegged in addition to the existing attMobileOriginatingCalls count, which is pegged for all mobile originated call types.

Data Source

Call Server

Source Field

VS.ansMobOrigFAXCall

Source Section

Circuit Switched Data

ansMobTerm14KCSDCall

This count is pegged for an answered 14.4K CSD call termination attempt i.e. when the MSC sends CONNECT ACK message to the MS after the mobile answered the mobile terminating GSM 14.4K CSD call. This count is pegged in addition to the existing ansMobileTerminatingCalls count which is pegged for all answered mobile terminated calls.

Data Source

Call Server

Source Field

VS.ansMobTerm14KCSDCall

Source Section

Circuit Switched Data

ansMobTerm64KCSDCall

UMTS Answered Mobile Termination 64K CSD Calls

Data Source

Call Server

Source Field

VS.ansMobTerm64KCSDCall

Source Section

Circuit Switched Data

ansMobTerm9KCSDCall

This count is pegged for an answered 9.6K CSD call termination attempt i.e. when the MSC sends the CONNECT ACK message to the MS after the mobile answered the mobile terminating GSM 9.6K CSD call. This count is pegged in addition to the existing ansMobileTerminatingCalls count which is pegged for all answered mobile terminated calls.

Data Source

Call Server

Source Field

VS.ansMobTerm9KCSDCall

Source Section

Circuit Switched Data

ansMobTermFAXCall

This count shall be pegged for an answered FAX call termination attempt, i.e. when the MSC sends the CONNECT ACK message to the MS after the mobile answered the mobile terminating GSM FAX call. This count is pegged in addition to the existing ansMobileTerminatingCalls count, which is pegged for all answered mobile terminated calls.

Data Source

Call Server

Source Field

VS.ansMobTermFAXCall

Source Section

Circuit Switched Data

ansTestMobileEmergencyCalls

Pegged on receipt of the CONNECTION ACKNOWLEDGE Message from the originating MS for a test emergency call.

Data Source

Call Server

Source Field

VS.ansTestMobileEmergencyCalls

Source Section

E911

arrivalOfVisitorsFromOtherPLMNs_GSM

The number of arrivals of visitors from other PLMNs i.e. exclude own MS's returning to HPLMN. (GSM Technology Type)

Data Source

Call Server

Source Field

arrivalOfVisitorsFromOtherPLMNs

Source Section

Location Update (GSM)

arrivalOfVisitorsFromOtherPLMNs_UMTS

The number of arrivals of visitors from other PLMNs i.e. exclude own MS's returning to HPLMN. (UMTS Technology Type)

Data Source

Call Server

Source Field

arrivalOfVisitorsFromOtherPLMNs

Source Section

Location Update (UMTS)

asrtESC

This is the count of all escalating asserts.

Data Source

Call Server

Source Field

VS.asrtESC

Source Section

Switch Health

asrtNonESC

This is the count of all non-escalating asserts.

Data Source

Call Server

Source Field

VS.asrtNonESC

Source Section

Switch Health

asrtNonESCCritical

This is the count of Critial non-escalating asserts.

Data Source

Call Server

Source Field

VS.asrtNonESCCritical

Source Section

Per Service Member

asrtNonESCMajor

This is the count of Major non-escalating asserts.

Data Source

Call Server

Source Field

VS.asrtNonESCMajor

Source Section

Per Service Member

asrtNonESCMinor

This is the count of Minor non-escalating asserts.

Data Source

Call Server

Source Field

VS.asrtNonESCMinor

Source Section

Per Service Member

Att_GSM_UMTS_HHO

This count is pegged for GSM-to-UMTS hard handover attempts. It is pegged at the controlling MSC when it receives a HANDOVER REQUIRED message for a GSM-to-UMTS hard handover attempt. This count is pegged for both intra and inter-MSC handovers.

Data Source

Call Server

Source Field

VS.Att_GSM_UMTS_HHO

Source Section

Handover

Att_UMTS_GSM_HHO

This count is pegged for UMTS-to-GSM hard handover attempts. It is pegged at the controlling MSC when it receives a RELOCATION REQUIRED message for a UMTS-to-GSM hard handover attempt. This count is pegged for both intra and inter-MSC handovers.

Data Source

Call Server

Source Field

VS.Att_UMTS_GSM_HHO

Source Section

Handover

attAuthProcsInVLR

Attempted authentication procedures in VLR/MSC

Data Source

Call Server

Source Field

attAuthProcsInVLR

Source Section

Authentication

attCFBNDUBinVMSC

This count shall be pegged when Call Forwarding on Network Determined User Busy (NDUB) is provided and active and a call termination resulting in clearing message with cause 17 (User Busy).

Data Source

Call Server

Source Field

VS.attCFBNDUBinVMSC

Source Section

Per CS Service Member

attCFBUDUBinVMSC

This count shall be pegged when Call Forwarding on User Determined User Busy (UDUB) is provided and active and a call termination resulting in clearing message with cause 17 (User Busy).

Data Source

Call Server

Source Field

VS.attCFBUDUBinVMSC

Source Section

Per CS Service Member

attCFNRcinGMSC

This count shall be pegged when Call Forwarding on Mobile Subscriber Not Reachable (CFNRc) is provided and active and a call termination resulting in SRI ACK with FTN and reason equal to (CFNRc activated in HLR).

Data Source

Call Server

Source Field

VS.attCFNRcinGMSC

Source Section

Per CS Service Member

attCFNRcinVMSC

This count shall be pegged when Call Forwarding on Mobile Subscriber Not Reachable (CFNRc) is provided and active and a call termination attempt causes paging and no response to paging timer expires.

Data Source

Call Server

Source Field

VS.attCFNRcinVMSC

Source Section

Per CS Service Member

attCFNRyinVMSC

This count shall be pegged when Call Forwarding No Reply (CFNRy) is provided and active and a call termination attempt offered a subscriber and call forwarding no reply timer expires.

Data Source

Call Server

Source Field

VS.attCFNRyinVMSC

Source Section

Per CS Service Member

attCFUinGMSC

This count shall be pegged when Call Forwarding Unconditional (CFU) is provided and active and a call termination resulting in SRI ACK with FTN and reason equal to (CFU activated in HLR).

Data Source

Call Server

Source Field

VS.attCFUinGMSC

Source Section

Per CS Service Member

attCipheringModeControlProcs_GSM

Attempted ciphering mode control procedures (GSM Technology Type)

Data Source

Call Server

Source Field

attCipheringModeControlProcs

Source Section

Security Mode (GSM)

attCipheringModeControlProcs_UMTS

Attempted ciphering mode control procedures (UMTS Technology Type)

Data Source

Call Server

Source Field

attCipheringModeControlProcs

Source Section

Security Mode (UMTS)

attConfCircuitReq

Conference circuit request attempts

Data Source

Call Server

Source Field

VS.attConfCircuitReq

Source Section

3-way Multi-Party

attIdentificationReqToPVLRs

Attempted Identification requests to PVLRs

Data Source

Call Server

Source Field

attIdentificationReqToPVLRs

Source Section

Authentication

attInsertSubDataService

Attempted Insert Subscriber Data Service

Data Source

Call Server

Source Field

attInsertSubDataService

Source Section

Per VLR Service Member

attInterrogationOfHLRsForRouting

Attempted interrogations of HLRs for routing

Data Source

Call Server

Source Field

attInterrogationOfHLRsForRouting

Source Section

Interrogation of HLR for Routing

attInterVLRLocationUpdates_GSM

Attempted Inter-VLR Location Updates (GSM Technology Type)

Data Source

Call Server

Source Field

attInterVLRLocationUpdates

Source Section

Location Update (GSM)

attInterVLRLocationUpdates_UMTS

Attempted Inter-VLR Location Updates (UMTS Technology Type)

Data Source

Call Server

Source Field

attInterVLRLocationUpdates

Source Section

Location Update (UMTS)

attIntraVLRLocationUpdates_GSM

Attempted Intra-VLR Location Updates (GSM Technology Type)

Data Source

Call Server

Source Field

attIntraVLRLocationUpdates

Source Section

Location Update (GSM)

attIntraVLRLocationUpdates_UMTS

Attempted Intra-VLR Location Updates (UMTS Technology Type)

Data Source

Call Server

Source Field

attIntraVLRLocationUpdates

Source Section

Location Update (UMTS)

attIntraVLRPerioLocationUpdates_GSM

Attempted intra-VLR Location Updates (timebased periodical location update) (GSM Technology Type)

Data Source

Call Server

Source Field

VS.attIntraVLRPerioLocationUpdates

Source Section

Location Update (GSM)

attIntraVLRPerioLocationUpdates_UMTS

Attempted intra-VLR Location Updates (timebased periodical location update) (UMTS Technology Type)

Data Source

Call Server

Source Field

VS.attIntraVLRPerioLocationUpdates

Source Section

Location Update (UMTS)

attL2Lcalls

This count is pegged for each attempted land originated to land terminated call attempt. It is pegged after digit analysis shows the called party is not a mobile being served by this MSC; i.e. the call will leave this MSC on a trunk. This includes the case of the terminating leg of the call being a mobile which is roaming to another MSC.

Data Source

Call Server

Source Field

VS.attL2Lcalls

Source Section

Traffic Profiling

attL2Mcalls

This count is pegged for each attempted land originated to mobile terminated call attempt. It is pegged after digit analysis on the calling and called party numbers in the SETUP message and a possible HLR query shows this is a call attempt incoming from the PLMN to a mobile currently being served by this MSC. It includes calls to mobiles that went to voice mail or were forwarded. A call to a mobile that's roaming in another MSC does not peg this count. That case will be pegged as a Land-to-Land call attempt since the terminating leg of the call leaves this switch as an outgoing landline call.

Data Source

Call Server

Source Field

VS.attL2Mcalls

Source Section

Traffic Profiling

attLayer3TransportSSMessagesFromRNC

Number of initial layer 3 SS programming & pUSSR related transaction messages from RNC (e.g. REGISTERinvoke)

Data Source

Call Server

Source Field

VS.attLayer3TransportSSMessagesFromRNC

Source Section

Supplementary Services (SS)

attM2Lcalls

This count is pegged for each attempted mobile originated to land terminated call attempt. It is pegged after receipt of the SETUP message from the originating mobile after digit analysis indicates the call is from a mobile served by this MSC and the terminating leg will leave this MSC on a trunk. This includes the case of the called party being a mobile which is roaming to another MSC. A call originating from a mobile that's roaming in another MSC will not peg this count; that case would be pegged as a Land-to-Land call attempt since the A leg of the call enters this switch as an incoming landline call.

Data Source

Call Server

Source Field

VS.attM2Lcalls

Source Section

Traffic Profiling

attM2Mcalls

This count is pegged for each mobile originated to mobile terminated call attempt. It is pegged after receipt of the SETUP message from the originating mobile after digit analysis and a

possible HLR query shows both the calling and called parties are mobiles currently being served by this MSC. It includes calls to mobiles that went to voice mail or were forwarded. A mobile originated call to a mobile that's roaming to another MSC will not peg this count; that case would be pegged as a Mobile-to-Land call attempt since the terminating leg of the call leaves this MSC as an outgoing landline call.

Data Source

Call Server

Source Field

VS.attM2Mcalls

Source Section

Traffic Profiling

attMobileEmergencyCalls_GSM

Attempted Mobile Emergency calls (GSM Technology Type)

Data Source

Call Server

Source Field

attMobileEmergencyCalls

Source Section

Mobile Call Setup (GSM)

attMobileEmergencyCalls_UMTS

Attempted Mobile Emergency calls (UMTS Technology Type)

Data Source

Call Server

Source Field

attMobileEmergencyCalls

Source Section

Mobile Call Setup (UMTS)

attMobileOriginatingCalls_GSM

Attempted mobile originating calls (GSM Technology Type)

Data Source

Call Server

Source Field

attMobileOriginatingCalls

Source Section

Mobile Call Setup (GSM)

attMobileOriginatingCalls_UMTS

Attempted mobile originating calls (UMTS Technology Type)

Data Source

Call Server

Source Field

attMobileOriginatingCalls

Source Section

Mobile Call Setup (UMTS)

attMobileOrigL5

This count is pegged when a mobile incoming call attempt is received at L5 and L5 is successfully initialized for the call.

Data Source

Call Server

Source Field

VS.attMobileOrigL5

Source Section

Capacity Engineering

attMobileTerminatingCalls_GSM

Attempted mobile terminating calls (GSM Technology Type)

Data Source

Call Server

Source Field

attMobileTerminatingCalls

Source Section

Mobile Call Setup (GSM)

attMobileTerminatingCalls_UMTS

Attempted mobile terminating calls (UMTS Technology Type)

Data Source

Call Server

Source Field

attMobileTerminatingCalls

Source Section

Mobile Call Setup (UMTS)

attMobileTermL5

This count is pegged when a mobile outgoing call attempt was received at L5 and L5 is successfully initialized for the call. Note: An ISUP terminating L5 attempt is also possible on a provisioned WCS and in the event of certain failures it is not possible to distinguish an outgoing PSTN call from a mobile terminated call. In this case it is OK not to peg this count.

Data Source

Call Server

Source Field

VS.attMobileTermL5

Source Section

Capacity Engineering

attMobOrig14KCSDCall

GSM Attempted Mobile Originated 14.4 K CSD Calls

Data Source

Call Server

Source Field

VS.attMobOrig14KCSDCall

Source Section

Circuit Switched Data

attMobOrig64KCSDCall

UMTS Attempted Mobile Origination 64K CSD Calls

Data Source

Call Server

Source Field

VS.attMobOrig64KCSDCall

Source Section

Circuit Switched Data

attMobOrig9KCSDCall

GSM Attempted Mobile Originated 9.6 K CSD Calls

Data Source

Call Server

Source Field

VS.attMobOrig9KCSDCall

Source Section

Circuit Switched Data

attMobOrigFAXCall

This count shall be pegged at the SS7 application for a FAX call origination accepted attempt, i.e. when the MSC sends CALL PROCEEDING message to the MS in response to a mobile originated GSM FAX. This count is pegged in addition to the existing attMobileOriginatingCalls count, which is pegged for all mobile originated call types.

Data Source

Call Server

Source Field

VS.attMobOrigFAXCall

Source Section

Circuit Switched Data

attMobTerm14KCSDCall

This count is pegged for a successful 14.4K CSD call termination attempt i.e. when the MSC receives the CALL CONFIRMED message from the MS accepting a GSM 14.4K CSD bearer. This count is pegged in addition to the existing attMobileTerminatingCalls count which is pegged for all mobile terminated call types.

Data Source

Call Server

Source Field

VS.attMobTerm14KCSDCall

Source Section

Circuit Switched Data

attMobTerm9KCSDCall

This count is pegged for a successful 9.6K CSD call termination attempt i.e. when the MSC receives the CALL CONFIRMED message from the MS accepting a GSM 9.6K CSD bearer. This count is pegged in addition to the existing attMobileTerminatingCalls count which is pegged for all mobile terminated call types.

Data Source

Call Server

Source Field

VS.attMobTerm9KCSDCall

Source Section

Circuit Switched Data

attMobTermFAXCall

This count shall be pegged for a successful GSM call termination attempt, i.e. when the MSC receives the CALL CONFIRMED message from the MS accepting a FAX call.This count is pegged in addition to the existing attMobileTerminatingCalls count, which is pegged for all mobile terminated call types.

Data Source

Call Server

Source Field

VS.attMobTermFAXCall

Source Section

Circuit Switched Data

attMPTYCalls

Invocation attempts of multiple party calls

Data Source

Call Server

Source Field

VS.attMPTYCalls

Source Section

3-way Multi-Party

attMSMemoryAvailableNotifications

Attempted MS memory available notifications

Data Source

Call Server

Source Field

attMSMemoryAvailableNotifications

Source Section

SMS

attNumCCCReq

No vendor documentation could be found for this metric.

Data Source

Call Server

Source Field

VS.attNumCCCReq

Source Section

CALEA

attOpForMobileOriginatingPointToPointSMs_GSM

Attempted operations for mobile originating point to point SMs (GSM Technology Type)

Data Source

Call Server

Source Field

attOpForMobileOriginatingPointToPointSMs

Source Section

SMS Traffic (GSM)

attOpForMobileOriginatingPointToPointSMs_UMTS

Attempted operations for mobile originating point to point SMs (UMTS Technology Type)

Data Source

Call Server

Source Field

attOpForMobileOriginatingPointToPointSMs

Source Section

SMS Traffic (UMTS)

attOpForMobileTerminatingPointToPointSMs_GSM

Attempted operations for mobile terminating point to point SMs (GSM Technology Type)

Data Source

Call Server

Source Field

attOpForMobileTerminatingPointToPointSMs

Source Section

SMS Traffic (GSM)

attOpForMobileTerminatingPointToPointSMs_UMTS

Attempted operations for mobile terminating point to point SMs (UMTS Technology Type)

Data Source

Call Server

Source Field

attOpForMobileTerminatingPointToPointSMs

Source Section

SMS Traffic (UMTS)

attPrePaidCall

Pre-paid Call Attempts through Packet Gateway

Data Source

Call Server

Source Field

VS.attPrePaidCall

Source Section

Pre-Paid

attReadyForSM

This count shall record the number of MAP Ready for SM attempts sent to the HLR to reset the MNRF when messages are waiting. This count shall be pegged when the MSC sends a MAP "ReadyForSM" message to the HLR to reset the Mobile-Station-Not-Reachable-Flag (MNRF) in the HLR. The MNRF is a Boolean parameter indicating if the address list of Messages-Waiting-Data (MWD) contains one or more entries because an attempt to deliver a short message to an MS has failed with a cause of Absent Subscriber. The MWD list is maintained in the HLR and the MNRF is stored in the VLR and the HLR.

Data Source

Call Server

Source Field

VS.attReadyForSM

Source Section

Per VLR Service Member

attReqForAuthSetsSentToHLR

Attempted requests for Authentication sets sent to HLR by VLRs

Data Source

Call Server

Source Field

attReqForAuthSetsSentToHLR

Source Section

Authentication

attReqForMSRN

Attempted request for MSRN

Data Source

Call Server

Source Field

attReqForMSRN

Source Section

Interrogation of HLR for Routing

attSSRelatedOperationsInHLR

Attempted Supplementary Service (SS) related operations in HLR

Data Source

Call Server

Source Field

attSSRelatedOperationsInHLR

Source Section

Supplementary Services (SS)

attTestMobileEmergencyCalls

Pegged for the mobile originated test emergency call when a new mobile originated call attempt is received on the SS7 Device Server, i.e. the DS has received a SETUP request message from the originating UE and analysis of the SETUP message indicates the call is a test emergency call.

Data Source

Call Server

Source Field

VS.attTestMobileEmergencyCalls

Source Section

E911

attTMSIReallocations_GSM

Attempted TMSI re-allocations (GSM Technology Type)

Data Source

Call Server

Source Field

attTMSIReallocations

Source Section

Location Update (GSM)

attTMSIReallocations_UMTS

Attempted TMSI re-allocations (UMTS Technology Type)

Data Source

Call Server

Source Field

attTMSIReallocations

Source Section

Location Update (UMTS)

audErrCount

This is the count of all audit errors, meaning the total number of errors detected by software audits.

Data Source

Call Server

Source Field

VS.audErrCount

Source Section

Switch Health

audManAct

This is the count of all audit errors that required some type of manual action in order to recover from the error.

Data Source

Call Server

Source Field

VS.audManAct

Source Section

Switch Health

audNewEvent

This is the count of all audit initiated events, meaning that an audit ran and got an event number because it found an error and did not already have an event number.

Data Source

Call Server

Source Field

VS.audNewEvent

Source Section

Switch Health

authCiphFailureT3260Expiry_GSM

This counter is pegged based on the UTRAN - 3GMSC communication timer T3260 expiring. This count shall be pegged when the network has waited for an AUTHENTICATION RESPONSE after receiving an AUTHENTICATION REQUEST. This occurs before aborting the procedure and releasing the Radio Resource connection. (TechnologyType=GSM)

Data Source

Call Server

Source Field

VS.authCiphFailureT3260Expiry (with TechnologyType=GSM)

Source Section

Per SS7 Service Member, per Technology Type

authCiphFailureT3260Expiry_UMTS

This counter is pegged based on the UTRAN - 3GMSC communication timer T3260 expiring. This count shall be pegged when the network has waited for an AUTHENTICATION RESPONSE after receiving an AUTHENTICATION REQUEST. This occurs before aborting the procedure and releasing the Radio Resource connection. (TechnologyType=UMTS)

Data Source

Call Server

Source Field

VS.authCiphFailureT3260Expiry (with TechnologyType=UMTS)

Source Section

Per SS7 Service Member, per Technology Type

authenticationSyncFailure

Authentication failure due to sync failure.

Data Source

Call Server

Source Field

VS.authenticationSyncFailure

Source Section

Per VLR Service Member

authReqFailSync_GSM

Pegged for authentication requests which failed due to a sync failure received from the UE for GSM.

Data Source

Call Server

Source Field

VS.authReqFailSync (with TechnologyType=GSM)

Source Section

Authentication per Technology Type

authReqFailSync_UMTS

Pegged for authentication requests which failed due to a sync failure received from the UE for UMTS.

Data Source

Call Server

Source Field

VS.authReqFailSync (with TechnologyType=UMTS)

Source Section

Authentication per Technology Type

aveBaseCpuUsage

Reports the average CPU utilization for a set of core processes (i.e. processes which may contribute to CPU overloads due to the type of activity or scheduling method). For diskless cards the scan rate will be 400ms (milliseconds) and For diskful cards the scan rate will be 10s (seconds) scan. For each scan over the course of a report interval, the CPU utilization for the 'core' processes is computed and the result is reported as the Average Core Processes CPU Utilization, expressed as a percentage

Data Source

Call Server

Source Field

VS.aveNEcoreProcCpuUsage, VS.aveBaseCpuUsage

Source Section

Capacity Engineering

aveCpuUsage

Reports the average CPU utilization (i.e. 100 - idle task). For diskless cards the scan rate will be 400ms (milliseconds) and For diskfull cards the scan rate will be 10s (seconds) scan. For each scan over the course of a report interval, the CPU utilization is computed and the result is reported as the Average CPU Utilization expressed as a percentage.

Data Source

Call Server

Source Field

VS.aveNECpuUsage, VS.aveCpuUsage

Source Section

Capacity Engineering

aveHONumUsage

This count represents the average number of HO numbers in use over the reporting period. The number of HO numbers in use is sampled every 10 seconds. The average value (reported by this count) is obtained by dividing the total in use by the number of samples taken during the reporting period.

Data Source

Call Server

Source Field

VS.aveHONumUsage

Source Section

Handover

aveMSRNUsage

This count represents the average number of MSRNs in use over the reporting period. The number MSRNs in use is sampled every 10 seconds and the number in use for each sample is summed up over the reporting period. The average value (reported by this count) is obtained by dividing the total in use by the number of samples taken during the reporting period.

Data Source

Call Server

Source Field

VS.aveMSRNUsage

Source Section

Roamer Support

aveNumVLRSubs

This count represents the average number of subscribers registered in the VLR over the reporting period. The number of registered VLR subscribers is sampled every 10 seconds and the running total summed up over the reporting period. The average value (reported by this count) is obtained by dividing the total by the number of samples taken during the reporting period.

Data Source

Call Server

Source Field

VS.aveNumVlrSubs

Source Section

VLR

BSSMAPLEConnInfoTrans

BSSMAP-LE Connectionless Information Messages Transferred

Data Source

Call Server

Source Field

VS.BSSMAPLEConnInfoTrans

Source Section

GSM Location Services for Serving Mobile Location Center (SMLC)

BSSMAPLEConnOrntInfoTrans

BSSMAP-LE Connection Oriented Information Messages Transferred

Data Source

Call Server

Source Field

VS.BSSMAPLEConnOrntInfoTrans

Source Section

GSM Location Services for Serving Mobile Location Center (SMLC)

BSSMAPLELMUConnAcptMsgRec

BSSMAP-LE LMU Connection Accept Messages Recieved

Data Source

Call Server

Source Field

VS.BSSMAPLELMUConnAcptMsgRec

Source Section

GSM Location Services for Serving Mobile Location Center (SMLC)

BSSMAPLELMUConnAcptMsgSent

BSSMAP-LE LMU Connection Accept Messages Sent

Data Source

Call Server

Source Field

VS.BSSMAPLELMUConnAcptMsgSent

Source Section

GSM Location Services for Serving Mobile Location Center (SMLC)

BSSMAPLELMUConnReqMsgRec

BSSMAP-LE LMU Connection Request Messages Received

Data Source

Call Server

Source Field

VS.BSSMAPLELMUConnReqMsgRec

Source Section

GSM Location Services for Serving Mobile Location Center (SMLC)

BSSMAPLELMUConnReqMsgSent

BSSMAP-LE LMU Connection Request Messages Sent

Data Source

Call Server

Source Field

VS.BSSMAPLELMUConnReqMsgSent

Source Section

GSM Location Services for Serving Mobile Location Center (SMLC)

CALEANumLICDRDel

Pegged each time a hung LICDR tuples is deleted by the hourly IRISP cleaner thread in the CNFG host.

Data Source

Call Server

Source Field

VS.CALEANumLICDRDel

Source Section

DB

callReleasedUDUB

Pegged on receipt of Release message with release cause value of 17 (UDUB) from UE. This count is required to support the call completion rate calculation.

Data Source

Call Server

Source Field

VS.callReleasedUDUB

Source Section

Call Setup

camelFailureSSFTimeout

CAMEL Failure - SSF Timeout

Data Source

Call Server

Source Field

VS.camelFailureSSFTimeout

Source Section

CAMEL 3 Services

camelMMEventNotify

CAMEL MAP MM Event Notification

Data Source

Call Server

Source Field

VS.camelMMEventNotify

Source Section

CAMEL 3 Services

camelQueries

CAMEL Queries

Data Source

Call Server

Source Field

VS.camelQueries

Source Section

CAMEL 3 Services

camelSCPDetectedFailure

CAMEL SCP Detected Failure

Data Source

Call Server

Source Field

VS.camelSCPDetectedFailure

Source Section

CAMEL 3 Services

camelSMSFailureSSFTimeout

CAMEL SMS Failure - SSF Timeout

Data Source

Call Server

Source Field

VS.camelSMSFailureSSFTimeout

Source Section

CAMEL 3 Services

camelSMSQueries

CAMEL SMS Queries

Data Source

Call Server

Source Field

VS.camelSMSQueries

Source Section

CAMEL 3 Services

camelSMSSCPDetectedFailure

CAMEL SMS SCP Detected Failure

Data Source

Call Server

Source Field

VS.camelSMSSCPDetectedFailure

Source Section

CAMEL 3 Services

camelSMSSSFSysFailure

CAMEL SMS SSF System Failure

Data Source

Call Server

Source Field

VS.camelSMSSSFSysFailure

Source Section

CAMEL 3 Services

camelSSFSystemFailure

CAMEL SSF System Failure

Data Source

Call Server

Source Field

VS.camelSSFSystemFailure

Source Section

CAMEL 3 Services

camelSubAbandon

CAMEL Failure - Subscriber Abandon

Data Source

Call Server

Source Field

VS.camelSubAbandon

Source Section

CAMEL 3 Services

cancelDeferredMTLRComplete

The number of Cancellation Requests for deferred MT-LRs which are completed by the MSC.

Data Source

Call Server

Source Field

VS.cancelDeferredMTLRComplete

Source Section

Location Services

CCDirINVOKERcvd

This count shall be pegged whenever a CallControlDirective (CCDir) message is received the FS

Data Source

Call Server

Source Field

VS.CCDirINVOKERcvd

Source Section

Packet Gateway ANSI-41 Call Delivery

CCDirRETError

The Feature Server sends a Return Error message to the SCP in response to a CCDir Invoke message.

Data Source

Call Server

Source Field

VS.CCDirRETError

Source Section

Packet Gateway ANSI-41 Call Delivery

CDRRecCnt

The number of CDR Records that were created.

Data Source

Call Server

Source Field

VS.CDRRecCnt

Source Section

Per CDR Service Member

chgAlarms

Pegged for each existing alarm that has changed in severity, including the change to clear, and excluding the change from clear to any other severity.

Data Source

Call Server

Source Field

VS.chgAlarms

Source Section

MI Profiling

CRBTCallSetupAtt

This count is pegged whenever a Customized Ring-Back Tone (CRBT) call setup ISUP IAM is sent from the MSC to the CRBT Server.

Data Source

Call Server

Source Field

VS.CRBTCallSetupAtt

Source Section

Customized Ring Back Tone

CRBTCallSetupFailCong

This count is pegged whenever a Customized Ring-Back Tone (CRBT) call setup attempt fails due to congestion at the CRBT Server. The following are network congestion cases for which this count is pegged: 1. The MSC receives REL with cause value of 34 no circuit is available for indirectly connected CRBT configuration. 2. The MSC receives REL with cause value of 42 switch equipment congestion for indirectly connected CRBT configuration. 3. All circuits are busy for a directly connected CRBT configuration.

Data Source

Call Server

Source Field

VS.CRBTCallSetupFailCong

Source Section

Customized Ring Back Tone

CRBTCallSetupFailNoAns

This count is pegged whenever a Customized Ring-Back Tone (CRBT) call setup attempt fails due to no answer by the CRBT Server. Specifically it is pegged when a call setup to CRBT server attempt fails because the Tcrbt timer timeout occurs after sending out an IAM and before it gets get a response. Note: If the LSS receives an ACM followed by an ANM then only one count is pegged and it will be done when it receives the ACM.

Data Source

Call Server

Source Field

VS.CRBTCallSetupFailNoAns

Source Section

Customized Ring Back Tone

CRBTCallSetupSucc

This count is pegged for a successful Customized Ring-Back Tone (CRBT) call setup attempt to the CRBT Server i.e. MSC receives an ACM without a cause value or an ANM message without an ACM previously received from CRBT server. At this point the calling party is connected to the CRBT.

Data Source

Call Server

Source Field

VS.CRBTCallSetupSucc

Source Section

Customized Ring Back Tone

CSCallSetupAtt

Call Server - Call Set-up Attempts

Data Source

Call Server

Source Field

VS.CSCallSetupAtt

Source Section

Call Processing Application

CSCallSetupAttSucc

Call Server - Call Set-up Attempts Successfully Completed

Data Source

Call Server

Source Field

VS.CSCallSetupAttSucc

Source Section

Call Processing Application

CSDCallBlkdIWFAllBusy

This count is pegged when a CSD call attempt is blocked (and failed) because all available IWFs are busy i.e. the IWF is connected but it has exceeded the maximum calls that the MSC is allowed to send to it.

Data Source

Call Server

Source Field

VS.CSDCallBlkdIWFAllBusy

Source Section

Circuit Switched Data

CSDCallBlkdIWFAllOos

This count is pegged when a CSD call is blocked (and failed) due to the unavailability of the IWF i.e. no IWF is connected to the MSC so the MSC releases the CSD call and pegs this count.

Data Source

Call Server

Source Field

VS.CSDCallBlkdIWFAllOos

Source Section

Circuit Switched Data

CSDCallBlkdNoIWF

Circuit Switched Data Call Blocked - No IWF Provisioned. This count shall be pegged when a CSD call is blocked due to the unavailability of the IWF, i.e. no IWF is connected to the MSC so the MSC releases the CSD call and pegs this count.

Data Source

Call Server

Source Field

VS.CSDCallBlkdNoIWF

Source Section

Call Setup

CSHandoverAtt

Call Server - Hand-over Attempts

Data Source

Call Server

Source Field

VS.CSHandoverAtt

Source Section

Call Processing Application

CSHandoverAttSucc

Call Server - Hand-over Attempts Successfully Completed

Data Source

Call Server

Source Field

VS.CSHandoverAttSucc

Source Section

Call Processing Application

CSInvalidCarrierInHLR

No vendor documentation could be found for this metric.

Data Source

Call Server

Source Field

VS.CSInvalidCarrierInHLR

Source Section

Call Processing Application

CSTransitNetworkNotAllowed

Pre-selected Carrier Routing: Transit Network not Allowed

Data Source

Call Server

Source Field

VS.CSTransitNetworkNotAllowed

Source Section

Call Processing Application

CUGOrigRej

All originating call attempts from all CUG subscribers that are rejected/cleared due to CUG screening. This measurement includes only rejected originating CUG attempts. This measurement is also pegged when the CUG feature is generally withdrawn on the MSC and a CUG origination is rejected because the originating CUG subscriber is not provisioned with OA (outgoing access).

Data Source

Call Server

Source Field

VS.CUGOrigRej

Source Section

Per CS Service Member

CUGOrigSuccAttCUG

All originating attempts from all CUG subscribers that are determined to be a CUG call. This measurement includes calls which have passed the mobile originating CUG screening checks at the VLR, and are sent towards the destination as a CUG call (with or without OA (outgoing access)).

Data Source

Call Server

Source Field

VS.CUGOrigSuccAttCUG

Source Section

Per CS Service Member

CUGOrigSuccAttOrd

All originating attempts from all CUG subscribers that are determined to be an ORDINARY call. This measurement includes CUG calls from CUG subscribers provisioned with OA (outgoing access) that are converted to Ordinary calls during mobile originating CUG screening checks at the VLR. This measurement is also pegged when the CUG feature is generally withdrawn on the MSC and a CUG origination is made from a CUG subscriber who is provisioned with OA (outgoing access).

Data Source

Call Server

Source Field

VS.CUGOrigSuccAttOrd

Source Section

Per CS Service Member

CUGTermSuccAttCUG

All terminating attempts to all CUG subscribers that are determined to be a CUG call i.e., when the MSC sends a SETUP attempt with a CUG index to called subscriber. This measurement includes only successful, terminating CUG call attempts.

Data Source

Call Server

Source Field

VS.CUGTermSuccAttCUG

Source Section

Per CS Service Member

CUGTermSuccAttCUGToOrd

All terminating attempts to all CUG subscribers that are converted from a CUG call to an ordinary call. This measurement includes terminating CUG call attempts (with OA (outgoing access)) that are successfully offered as terminating ordinary calls (to terminating CUG subscribers with IA (incoming access) provisioned). This measurement is also pegged when the CUG feature is generally withdrawn on the MSC under the same conditions.

Data Source

Call Server

Source Field

VS.CUGTermSuccAttCUGToOrd

Source Section

Per CS Service Member

CUGTermSuccAttOrd

All non-CUG terminating ordinary call attempts to all CUG subscribers. This measurement includes only successful terminating ordinary calls to terminating CUG subscribers with IA (incoming access) provisioned it does not include CUG calls converted to ordinary calls or rejected calls. This measurement is also pegged when the CUG feature is generally withdrawn on the MSC under the same conditions.

Data Source

Call Server

Source Field

VS.CUGTermSuccAttOrd

Source Section

Per CS Service Member

Data_Interval

Data interval for the Call Server data collection in seconds. It is taken from "duration" value of the relevant <granPeriod> tag in the Call Server XML data file.

Data Source

Call Server

Source Field

<granPeriod> tag "duration"

deferredMTLRAccepted

The number of deferred MT-LRs which are accepted by the MSC.

Data Source

Call Server

Source Field

VS.deferredMTLRAccepted

Source Section

Location Services

deferredMTLRAttempts

The number of deferred Mobile Terminating Location Requests (MT-LRs) received at the MSC.

Data Source

Call Server

Source Field

VS.deferredMTLRAttempts

Source Section

Location Services

deferredMTLRDeniedExcdAllowLimit

The number of deferred MT-LRs that were denied due to exceeding the allowable limit (i.e. 16) on number of deferred MT-LR pending on a target mobile. If the actual count observed is too high the current allowable limit "16" on number of deferred MT-LR pending on a target mobile may need to be increased.

Data Source

Call Server

Source Field

VS.deferredMTLRDeniedExcdAllowLimit

Source Section

Location Services

deferredMTLRDeniedNotAct

The number of deferred MT-LRs that were denied because this feature is not activated.

Data Source

Call Server

Source Field

VS.deferredMTLRDeniedNotAct

Source Section

Location Services

deferredMTLRDeniedUnauthLCSClient

The number of deferred MT-LRs that were denied due to unauthorized LCS Client.

Data Source

Call Server

Source Field

VS.deferredMTLRDeniedUnauthLCSClient

Source Section

Location Services

deferredMTLRFailAbsentSub

The number of pending deferred MT-LRs that failed after paging failure.

Data Source

Call Server

Source Field

VS.deferredMTLRFailAbsentSub

Source Section

Location Services

deferredMTLRFailed

The number of deferred MT-LRs that failed due to the expiration of the deferred MT-LR timer.

Data Source

Call Server

Source Field

VS.deferredMTLRFailed

Source Section

Location Services

deferredMTLRFailErrUndefined

The number of pending deferred MT-LRs that failed due to Network Congestion or due to an Undefined error.

Data Source

Call Server

Source Field

VS.deferredMTLRFailErrUndefined

Source Section

Location Services

deferredMTLRFailPriViolation

The number of pending deferred MT-LRs that failed due to Privacy Violation.

Data Source

Call Server

Source Field

VS.deferredMTLRFailPriViolation

Source Section

Location Services

deferredMTLRFailRestart

The number of pending deferred MT-LRs that failed due to mobile moving out of the MSC coverage area.

Data Source

Call Server

Source Field

VS.deferredMTLRFailRestart

Source Section

Location Services

deferredMTLRFailSLENotSpt

The number of pending deferred MT-LRs that failed due to Shape of Location Estimation returned from RAN Not Supported by GMLC.

Data Source

Call Server

Source Field

VS.deferredMTLRFailSLENotSpt

Source Section

Location Services

deferredMTLRSucc

The number of deferred MT-LRs for which the mobile location is successfully reported to GMLC.

Data Source

Call Server

Source Field

VS.deferredMTLRSucc

Source Section

Location Services

dirDialCarrRtgAtt

This count is pegged for mobile originated long-distance call for which the routing has to be done based on the dialed carrier and circuit code.

Data Source

Call Server

Source Field

VS.dirDialCarrRtgAtt

Source Section

Pre-selected Carrier Routing

dirDialCarrRtgAttFailed

This count is pegged for a mobile originated long-distance call using dialed carrier and circuit code for which the routing was attempted based on the dialed carrier and circuit code but there's no associated routing data for that carrier causing the call to be released.

Data Source

Call Server

Source Field

VS.dirDialCarrRtgAttFailed

Source Section

Pre-selected Carrier Routing

diskIOReadRate

The disk I/O rate as the average blocks read per second.

Data Source

Call Server

Source Field

VS.diskIOReadRate

Source Section

Disk I/O Rate

diskIOWriteRate

The disk I/O rate as the average blocks written per second.

Data Source

Call Server

Source Field

VS.diskIOWriteRate

Source Section

Disk I/O Rate

DTAPLETrans

DTAP-LE Messages Transferred

Data Source

Call Server

Source Field

VS.DTAPLETrans

Source Section

GSM Location Services for Serving Mobile Location Center (SMLC)

EmLCSFailNoGMLC

Emergency Network Induced Location Requests Failed - No Emergency GMLC Provisioned

Data Source

Call Server

Source Field

VS.EmLCSFailNoGMLC

Source Section

Emergency Location Services

EmLCSLocReqSucc

Emergency Mobile Originated Location Report Succeeded

Data Source

Call Server

Source Field

VS.EmLCSLocReqSucc

Source Section

Emergency Location Services

EmOrigLCSLocReqAtts

Emergency Mobile Originated Location Request Attempts

Data Source

Call Server

Source Field

VS.EmOrigLCSLocReqAtts

Source Section

Emergency Location Services

emptyResponsesForAuthFromHLRToVLR

The number of times a "MAP_SEND_AUTHENTICATION_INFO" service confirmation, no Authentication sets present, message is received. The VLR will have to reuse old authentication sets. It is pegged upon receipt of a MAP_SEND_AUTHENTICATION-INFO service confirmation, no Authentication sets present (GSM 09.02).

Data Source

Call Server

Source Field

VS.emptyResponsesForAuthFromHLRToVLR

Source Section

Per VLR Service Member

eventsAddedtoMIdb

Pegged for each event added to the MI database.

Data Source

Call Server

Source Field

VS.eventsAddedtoMIdb

Source Section

MI Profiling

exceptionService

All card exceptions that have occurred on the particular card on the SSP Shelf .

Data Source

Call Server

Source Field

VS.exceptionService

Source Section

Switch Health

externalHDOs_GSM

External Handovers (GSM Technology Type)

Data Source

Call Server

Source Field

externalHDOs

Source Section

Hand Over (GSM)

externalHDOs_UMTS

External Handovers (UMTS Technology Type)

Data Source

Call Server

Source Field

externalHDOs

Source Section

Hand Over (UMTS)

GINVOKED

This count is pegged for each GETS call request dialed without the *272 WPS prefix (GINVOKED). i.e. for each origination to a GETS DN (e.g. 710 NCS-GETS) without the WPS feature activation code prefix.

Data Source

Call Server

Source Field

VS.GINVOKED

Source Section

Wireless Priority Service

globalDiscExec

Pegged each time global discovery is executed automatically or manual requested via the MI GUI.

Data Source

Call Server

Source Field

VS.globalDiscExec

Source Section

MI Profiling

GMSCSigGtwyOverloadCtrl

GMSC Signalling Gateway Overload Control

Data Source

Call Server

Source Field

VS.GMSCSigGtwyOverloadCtrl

Source Section

Throttling

GMSCTermCUGAttRej

All terminating CUG attempts that fail to pass the HLR's screening. GMSC pegs this count when it had sent a MAP SRI basic message with a CUG interlock code and received a MAP SRI error (CUG-reject error or some other error). This measurement is pegged when a GSM CUG call fails due to a CUG Terminating screening check or a CUG CF screening check or any other rejection by the HLR.

Data Source

Call Server

Source Field

VS.GMSCTermCUGAttRej

Source Section

Per CS Service Member

GMSCTermCUGAttSucc

All terminating CUG attempts that successfully pass the HLR's screening. GMSC pegs this count after sending a MAP SRI basic message with a CUG interlock code and receives a positive SRI response. This measurement includes successful terminating CUG call attempts and CUG calls that potentially will be turned into ordinary call by the terminating switch and CUG calls that are forwarded.

Data Source

Call Server

Source Field

VS.GMSCTermCUGAttSucc

Source Section

Per CS Service Member

handoverRejCMM

This count shall be pegged for an Handover Request is reject because CMM is in progress.

Data Source

Call Server

Source Field

VS.handoverRejCMM

Source Section

Handover GSM

HLRRejectedLocationUpdates

This count is pegged for location update attempts that are rejected by the HLR. Typical reasons for the HLR rejected the location update are "Roaming Not Allowed" and ISD restriction.

Data Source

Call Server

Source Field

VS.HLRRejectedLocationUpdates

Source Section

Location Update

HOAS_IPtoCKTHandoffAttempt

When the HO AS receives an initial INVITE with the X-HO-InProgress header to establish a dialog, then HO AS shall peg the "HOAS_IPtoCKTHandoffAttempt" measurement count.

Data Source

Call Server

Source Field

VS.HOAS_IPtoCKTHandoffAttempt

Source Section

SIP

HOAS_IPtoCKTHandoffsuccessful

When the HO AS receives the initial INVITE with the X-HO-InProgress header and sends a 200OK in response to <Requirement SRD-5508-500> initial INVITE to establish a dialog present, the HOAS shall peg the "HOAS_IPtoCKTHandoffsuccessful" measurement count.

Data Source

Call Server

Source Field

VS.HOAS_IPtoCKTHandoffsuccessful

Source Section

SIP

IDReqToPVLRsUnidentifiedSub

Identification Request to PVLRs - Unidentified Subscriber

Data Source

Call Server

Source Field

VS.IDReqToPVLRsUnidentifiedSub

Source Section

Location Update

imsiAttachProcs_GSM

IMSI attach procedures (GSM Technology Type)

Data Source

Call Server

Source Field

imsiAttachProcs

Source Section

Location Update (GSM)

imsiAttachProcs_UMTS

IMSI attach procedures (UMTS Technology Type)

Data Source

Call Server

Source Field

imsiAttachProcs

Source Section

Location Update (UMTS)

imsiDetachProcs_GSM

IMSI detach procedures (GSM Technology Type)

Data Source

Call Server

Source Field

imsiDetachProcs

Source Section

Location Update (GSM)

imsiDetachProcs_UMTS

IMSI detach procedures (UMTS Technology Type)

Data Source

Call Server

Source Field

imsiDetachProcs

Source Section

Location Update (UMTS)

inCallAttL4

This count is pegged when a PSTN incoming call attempt was received at L4 and L4 is successfully initialzed for the call.

Data Source

Call Server

Source Field

VS.inCallAttL4

Source Section

Capacity Engineering

inCallAttL5

This count is pegged when a PSTN incoming call attempt is received at L5 and L5 is successfully initialized for the call.

Data Source

Call Server

Source Field

VS.inCallAttL5

© Copyright IBM Corp. 1999, 2009. All rights reserved.

Source Section

Capacity Engineering

INNPUnallocatedNumber

No vendor documentation could be found for this metric.

Data Source

Call Server

Source Field

VS.INNPUnallocatedNumber

Source Section

Local Number Portability

INQueries

Intelligent Network (IN) Queries

Data Source

Call Server

Source Field

VS.INQueries

Source Section

Intelligent Network (IN) Application

INQueryFailureNetworkFailure

Intelligent Network (IN) Queries failed due to Network Failure

Data Source

Call Server

Source Field

VS.INQueryFailureNetworkFailure

Source Section

Intelligent Network (IN) Application

INQueryFailureReturnedQueries

Intelligent Network (IN) Queries failed due to returned Queries

Data Source

Call Server

Source Field

VS.INQueryFailureReturnedQueries

Source Section

Intelligent Network (IN) Application

INQueryFailureSSP

Intelligent Network (IN) Queries failed due to SSP

Data Source

Call Server

Source Field

VS.INQueryFailureSSP

Source Section

Intelligent Network (IN) Application

INQueryFailureSSPTimeout

Intelligent Network (IN) Queries failed due to SSP Timeout

Data Source

Call Server

Source Field

VS.INQueryFailureSSPTimeout

Source Section

Intelligent Network (IN) Application

INQueryFailureSubscriberAbandon

Intelligent Network (IN) Queries failed due to Subscriber Abandon

© Copyright IBM Corp. 1999, 2009. All rights reserved.

Data Source

Call Server

Source Field

VS.INQueryFailureSubscriberAbandon

Source Section

Intelligent Network (IN) Application

INSCPQueryAtt

IN Server SCP Query Attempts

Data Source

Call Server

Source Field

VS.INSCPQueryAtt

Source Section

Intelligent Network (IN) Application

INSCPQueryAttSucc

IN Server SCP Query Attempts Successfully Completed

Data Source

Call Server

Source Field

VS.INSCPQueryAttSucc

Source Section

Intelligent Network (IN) Application

IPDCAllocConnReq

IPDC Allocation Connection Requests

Data Source

Call Server

Source Field

VS.IPDCAllocConnReq

Source Section

IPDC

IPDCAllocConnReqSucc

IPDC Successful Allocation Connection Requests

Data Source

Call Server

Source Field

VS.IPDCAllocConnReqSucc

Source Section

IPDC

IS41LocReqAtt

IS-41 Location Request Attempts

Data Source

Call Server

Source Field

VS.IS41LocReqAtt

Source Section

Miscellaneous Location Update

IS41LocReqAttSucc

IS-41 Location Request Attempts Successfully Completed

Data Source

Call Server

Source Field

VS.IS41LocReqAttSucc

© Copyright IBM Corp. 1999, 2009. All rights reserved.

Source Section

Miscellaneous Location Update

IS41LocReqSuccRcvd

Pegged each time the MSC receives an IS 41 successful return result message, in response to a LOCREQ INVOKE message being sent out.

Data Source

Call Server

Source Field

VS.IS41LocReqSuccRcvd

Source Section

Location Update

locationCancellationRqsts_GSM

Pegged when a location cancellation request is received. Location cancellation is used to delete a subscriber record from the serving node VLR. The procedure is invoked: * because the subscriber has registered with a new serving node, or * because the HPLMN operator has decided to delete the subscriber record from the serving node, e.g. because the subscription has been withdrawn, or because roaming restrictions have been imposed. Location cancellation can be used to force location updating including updating of subscriber data in the serving node at the next subscriber access. (3GPP TS 29.002 version 5.10.0 Release 5, Section 19.1.2 "Location Cancellation" (GSM)

Data Source

Call Server

Source Field

VS.locationCancellationRqsts

Source Section

Location Update

locationCancellationRqsts_UMTS

Pegged when a location cancellation request is received. Location cancellation is used to delete a subscriber record from the serving node VLR. The procedure is invoked: * because the subscriber has registered with a new serving node, or * because the HPLMN operator has decided to delete the subscriber record from the serving node, e.g. because the subscription has

been withdrawn, or because roaming restrictions have been imposed. Location cancellation can be used to force location updating including updating of subscriber data in the serving node at the next subscriber access. (3GPP TS 29.002 version 5.10.0 Release 5, Section 19.1.2 "Location Cancellation" (UMTS)

Data Source

Call Server

Source Field

VS.locationCancellationRqsts

Source Section

Location Update

locationCancellationRqsts_Unknown

Pegged when a location cancellation request is received. Location cancellation is used to delete a subscriber record from the serving node VLR. The procedure is invoked: * because the subscriber has registered with a new serving node, or * because the HPLMN operator has decided to delete the subscriber record from the serving node, e.g. because the subscription has been withdrawn, or because roaming restrictions have been imposed. Location cancellation can be used to force location updating including updating of subscriber data in the serving node at the next subscriber access. (3GPP TS 29.002 version 5.10.0 Release 5, Section 19.1.2 "Location Cancellation" (UNKNOWN)

Data Source

Call Server

Source Field

VS.locationCancellationRqsts

Source Section

Location Update

locReqBlkdOLC

Location Request Attempts Blocked by Overload Control

Data Source

Call Server

© Copyright IBM Corp. 1999, 2009. All rights reserved.

Source Field

VS.locReqBlkdOLC

Source Section

Overload Control

LOCREQINVOKESent

FPG Location Request INVOKE Message Sent

Data Source

Call Server

Source Field

VS.LOCREQINVOKESent

Source Section

Packet Gateway ANSI-41 Call Delivery

LOCREQINVREJRcvd

FPG LOCREQ INVOKE REJECT Message Received

Data Source

Call Server

Source Field

VS.LOCREQINVREJRcvd

Source Section

Packet Gateway ANSI-41 Call Delivery

LOCREQINVRETError

This count is pegged each time the Flexent Packet Gateway receives an IS-41 RETURN ERRORS message, in response to a LOCREQ INVOKE message sent out. Purpose: Aid in understanding the frequency that the various Location Request Returned Response messages are sent to the FPG from the mobile's HLR.

Data Source

Call Server

Source Field

VS.LOCREQINVRETError

Source Section

Location Update

LOCREQMsgRouteFail

FPG Location Request Message Route Failure

Data Source

Call Server

Source Field

VS.LOCREQMsgRouteFail

Source Section

Packet Gateway ANSI-41 Call Delivery

LOCREQMsgTO

FPG Location Request Message Timeout

Data Source

Call Server

Source Field

VS.LOCREQMsgTO

Source Section

Packet Gateway ANSI-41 Call Delivery

M3UAMsuReceive

The total number of received MSU's.

Data Source

Call Server

Source Field

VS.M3UAMsuReceive

© Copyright IBM Corp. 1999, 2009. All rights reserved.

Source Section

Per SS7 Service Member

M3UAMsuReceiveSucc

The number of received MSU's actually delivered to the upper layer.

Data Source

Call Server

Source Field

VS.M3UAMsuReceiveSucc

Source Section

Per SS7 Service Member

M3UAMsuTransmit

The number of MSU transmission requests from the upper layer.

Data Source

Call Server

Source Field

VS.M3UAMsuTransmit

Source Section

Per SS7 Service Member

M3UAMsuTransmitSucc

The number of successfully transmitted MSU's.

Data Source

Call Server

Source Field

VS.M3UAMsuTransmitSucc

Source Section

Per SS7 Service Member

manualVLRDeletes_GSM

Pegged when a VLR record is deleted from manual MSC actions. This is independent of the ImplicitPurge and SuperCharger features. (GSM)

Data Source

Call Server

Source Field

VS.manualVLRDeletes

Source Section

VLR Record Maintenance

manualVLRDeletes_UMTS

Pegged when a VLR record is deleted from manual MSC actions. This is independent of the ImplicitPurge and SuperCharger features.(UMTS)

Data Source

Call Server

Source Field

VS.manualVLRDeletes

Source Section

VLR Record Maintenance

manualVLRDeletes_Unknown

Pegged when a VLR record is deleted from manual MSC actions. This is independent of the ImplicitPurge and SuperCharger features. (UNKNOWN)

Data Source

Call Server

Source Field

VS.manualVLRDeletes

Source Section

VLR Record Maintenance

© Copyright IBM Corp. 1999, 2009. All rights reserved.

manualVLRPurge

Pegged each time a VLR entry is manually purged by a technician action.

Data Source

Call Server

Source Field

VS.manualVLRPurge

Source Section

VLR Record Maintenance

maxNEmemUsage

Maximum memory utilization for all platform network elements. For each 10-second scan/ sample over the course of a report interval, the Maximum Network Element Memory utilization is captured and reported as the Maximum Memory Utilization Per Network Element.

Data Source

Call Server

Source Field

VS.maxNEmemUsage

Source Section

Memory Utilization

memAllocFail

This is the count of the number of memory allocation attempts that failed.

Data Source

Call Server

Source Field

VS.memAllocFail

Source Section

Switch Health

memUsage

Memory Utilization %. The Memory Utilization level shall be checked on 5 minute intervals, the samples averaged across the reporting interval and the result reported in this count.

Data Source

Call Server

Source Field

VS.memUsage

Source Section

Memory Utilization

mgcAllocConnReq

MGC H.248 Allocation Connection Requests

Data Source

Call Server

Source Field

VS.mgcAllocConnReq

Source Section

Per H248 (Media Gateway Control) Service Member

mgcAllocConnSuccResp

MGC H.248 Allocation Connection Successful Responses

Data Source

Call Server

Source Field

VS.mgcAllocConnSuccResp

Source Section

Per H248 (Media Gateway Control) Service Member

© Copyright IBM Corp. 1999, 2009. All rights reserved.

mgcThrottledMsgs

When an H248 DS experiences congestion (either due to memory or cpu resources), the MGC will throttle requests for some percentage of new calls depending on the level of congestion experienced. This count is pegged for XMC ALLOCATE_CONENCTION requests for new calls which were processed without generating any associated H.248 traffic. This count is not pegged for emergency calls, which are not throttled.

Data Source

Call Server

Source Field

VS.mgcThrottledMsgs

Source Section

MGW Operations

mgwTL1PMcollReqs

Pegged for each southbound TL1 request sent to a MGW for performance measurement data collection.

Data Source

Call Server

Source Field

VS.mgwTL1PMcollReqs

Source Section

MI Profiling

MMAS_ANSI41_LOCREQInvokeSent

To be pegged when Mobility Management Application Server (MMAS) sent an ANSI41 MAP LOCREQ message successfully

Data Source

Call Server

Source Field

VS.MMAS_ANSI41_LOCREQInvokeSent

Source Section

VLR/MMAS

MMAS_ANSI41_LOCREQMsgRouteFail

To be pegged when route failure occurs for sending ANSI41 MAP LOCREQ message

Data Source

Call Server

Source Field

VS.MMAS_ANSI41_LOCREQMsgRouteFail

Source Section

VLR/MMAS

MMAS_ANSI41_LOCREQMsgTo

To be pegged when time out for receiving response for ANSI41 MAP LOCREQ

Data Source

Call Server

Source Field

VS.MMAS_ANSI41_LOCREQMsgTo

Source Section

VLR/MMAS

MMAS_ANSI41_LOCREQRejRcvd

To be pegged when Reject is received for ANSI41 MAP LOCREQ message

Data Source

Call Server

Source Field

VS.MMAS_ANSI41_LOCREQRejRcvd

Source Section

VLR/MMAS

© Copyright IBM Corp. 1999, 2009. All rights reserved.

MMAS_ANSI41_LOCREQRetError

To be pegged when Return Error is received for ANSI41 MAP LOCREQ message

Data Source

Call Server

Source Field

VS.MMAS_ANSI41_LOCREQRetError

Source Section

VLR/MMAS

MMAS_ANSI41_MO_SMDPPMsgTo

To be pegged when ANSI41 MAP SMDPP message is sent and subsequently no response is received for this transaction before the SMT(network) has expired.

Data Source

Call Server

Source Field

VS.MMAS_ANSI41_MO_SMDPPMsgTo

Source Section

VLR/MMAS

MMAS_ANSI41_MO_SMDPPRejRcvd

To be pegged when ANSI41 MAP SMDPP message is sent and subsequently a reject is received for this transaction.

Data Source

Call Server

Source Field

VS.MMAS_ANSI41_MO_SMDPPRejRcvd

Source Section

VLR/MMAS

MMAS_ANSI41_MO_SMDPPRetError

To be pegged when ANSI41 MAP SMDPP message is sent and subsequently a Return Error is received for this transaction.

Data Source

Call Server

Source Field

VS.MMAS_ANSI41_MO_SMDPPRetError

Source Section

VLR/MMAS

MMAS_ANSI41_MO_SMDPPRetRescc

To be pegged when ANSI41 MAP SMDPP message is sent and subsequently a Return Result is received for this transaction containing a SMS_CauseCode parameter.

Data Source

Call Server

Source Field

VS.MMAS_ANSI41_MO_SMDPPRetRescc

Source Section

VLR/MMAS

MMAS_ANSI41_MSINACTInvokeSent

To be pegged when Mobility Management Application Server (MMAS) sent an ANSI41 MAP MSInactive message successfully

Data Source

Call Server

Source Field

VS.MMAS_ANSI41_MSINACTInvokeSent

Source Section

VLR/MMAS

© Copyright IBM Corp. 1999, 2009. All rights reserved.

MMAS_ANSI41_MSINACTMsgRouteFail

To be pegged when route failure occurs for sending ANSI41 MAP MSInactive message

Data Source

Call Server

Source Field

VS.MMAS_ANSI41_MSINACTMsgRouteFail

Source Section

VLR/MMAS

MMAS_ANSI41_MSINACTMsgTo

To be pegged when time out for receiving response for ANSI41 MAP MSInactive

Data Source

Call Server

Source Field

VS.MMAS_ANSI41_MSINACTMsgTo

Source Section

VLR/MMAS

MMAS_ANSI41_MSINACTRejRcvd

To be pegged when Reject is received for ANSI41 MAP MSInactive message

Data Source

Call Server

Source Field

VS.MMAS_ANSI41_MSINACTRejRcvd

Source Section

VLR/MMAS

MMAS_ANSI41_MSINACTRetError

To be pegged when Return Error is received for ANSI41 MAP MSInactive message

Data Source

Call Server

Source Field

VS.MMAS_ANSI41_MSINACTRetError

Source Section

VLR/MMAS

MMAS_ANSI41_MT_SMDPPRetErr

To be pegged when ANSI41 MAP SMDPP message is received and subsequently a Return Error is generated for this transaction.

Data Source

Call Server

Source Field

VS.MMAS_ANSI41_MT_SMDPPRetErr

Source Section

VLR/MMAS

MMAS_ANSI41_MT_SMDPPRetRescc

To be pegged when ANSI41 MAP SMDPP message is received and subsequently a Return Result is generated for this transaction containing a SMS_CauseCode parameter.

Data Source

Call Server

Source Field

VS.MMAS_ANSI41_MT_SMDPPRetRescc

Source Section

VLR/MMAS

MMAS_ANSI41_QUALDIRInvokeRcvd

To be pegged when ANSI41 MAP QUALDIR message is received

© Copyright IBM Corp. 1999, 2009. All rights reserved.

Data Source

Call Server

Source Field

VS.MMAS_ANSI41_QUALDIRInvokeRcvd

Source Section

VLR/MMAS

MMAS_ANSI41_QUALDIRReject

To be pegged when Reject is sent for ANSI41 MAP QUALDIR message

Data Source

Call Server

Source Field

VS.MMAS_ANSI41_QUALDIRReject

Source Section

VLR/MMAS

MMAS_ANSI41_QUALDIRRetError

To be pegged when Return Error is sent for ANSI41 MAP QUALDIR message

Data Source

Call Server

Source Field

VS.MMAS_ANSI41_QUALDIRRetError

Source Section

VLR/MMAS

MMAS_ANSI41_REGCANInvokeRcvd

To be pegged when ANSI41 MAP REGCAN message is received

Data Source

Call Server

Source Field

VS.MMAS_ANSI41_REGCANInvokeRcvd

Source Section

VLR/MMAS

MMAS_ANSI41_REGCANReject

To be pegged when Reject is sent for ANSI41 MAP REGCAN message

Data Source

Call Server

Source Field

VS.MMAS_ANSI41_REGCANReject

Source Section

VLR/MMAS

MMAS_ANSI41_REGCANRetError

To be pegged when Return Error is sent for ANSI41 MAP REGCAN message

Data Source

Call Server

Source Field

VS.MMAS_ANSI41_REGCANRetError

Source Section

VLR/MMAS

MMAS_ANSI41_REGNOTInvokeSent

To be pegged when Mobility Management Application Server (MMAS) sent an ANSI41 MAP REGNOT message successfully

Data Source

Call Server

© Copyright IBM Corp. 1999, 2009. All rights reserved.

Source Field

VS.MMAS_ANSI41_REGNOTInvokeSent

Source Section

VLR/MMAS

MMAS_ANSI41_REGNOTMsgRouteFail

To be pegged when route failure occurs for sending ANSI41 MAP REGNOT message

Data Source

Call Server

Source Field

VS.MMAS_ANSI41_REGNOTMsgRouteFail

Source Section

VLR/MMAS

MMAS_ANSI41_REGNOTMsgTo

To be pegged when time out for receiving response for ANSI41 MAP REGNOT

Data Source

Call Server

Source Field

VS.MMAS_ANSI41_REGNOTMsgTo

Source Section

VLR/MMAS

MMAS_ANSI41_REGNOTRejRcvd

To be pegged when Reject is received for ANSI41 MAP REGNOT message

Data Source

Call Server

Source Field

VS.MMAS_ANSI41_REGNOTRejRcvd

Source Section

VLR/MMAS

MMAS_ANSI41_REGNOTRetError

To be pegged when Return Error is received for ANSI41 MAP REGNOT message

Data Source

Call Server

Source Field

VS.MMAS_ANSI41_REGNOTRetError

Source Section

VLR/MMAS

MMAS_ANSI41_SMDPPInvokeRcvd

To be pegged when ANSI41 MAP SMDPP message is received.

Data Source

Call Server

Source Field

VS.MMAS_ANSI41_SMDPPInvokeRcvd

Source Section

VLR/MMAS

MMAS_ANSI41_SMDPPInvokeSent

To be pegged when ANSI41Mobile Application Part (MAP) SMDPP message is sent

Data Source

Call Server

Source Field

VS.MMAS_ANSI41_SMDPPInvokeSent

Source Section

VLR/MMAS

© Copyright IBM Corp. 1999, 2009. All rights reserved.

MMAS_ANSI41_SMDPPMsgRouteFail

To be pegged when ANSI41 MAP SMDPP message is attempted and subsequently an internal indication of Error is received for this transaction.

Data Source

Call Server

Source Field

VS.MMAS_ANSI41_SMDPPMsgRouteFail

Source Section

VLR/MMAS

MMAS_ANSI41_SMSNOTInvokeSent

To be pegged when ANSI41 MAP SMSNOT message is sent

Data Source

Call Server

Source Field

VS.MMAS_ANSI41_SMSNOTInvokeSent

Source Section

VLR/MMAS

MMAS_ANSI41_SMSNOTMsgRouteFail

To be pegged when ANSI41 MAP SMSNOT message is attempted and subsequently an internal indication of Error is received for this transaction.

Data Source

Call Server

Source Field

VS.MMAS_ANSI41_SMSNOTMsgRouteFail

Source Section

VLR/MMAS

MMAS_ANSI41_SMSNOTMsgTo

To be pegged when ANSI41 MAP SMSNOT message is sent and subsequently no response is received for this transaction before the SMT(network) has expired.

Data Source

Call Server

Source Field

VS.MMAS_ANSI41_SMSNOTMsgTo

Source Section

VLR/MMAS

MMAS_ANSI41_SMSNOTRejRcvd

To be pegged when ANSI41 MAP SMSNOT message is sent and subsequently a reject is received for this transaction.

Data Source

Call Server

Source Field

VS.MMAS_ANSI41_SMSNOTRejRcvd

Source Section

VLR/MMAS

MMAS_ANSI41_SMSNOTRetError

To be pegged when ANSI41 MAP SMSNOT message is sent and subsequently a Return Error is received for this transaction.

Data Source

Call Server

Source Field

VS.MMAS_ANSI41_SMSNOTRetError

Source Section

VLR/MMAS

© Copyright IBM Corp. 1999, 2009. All rights reserved.

MMAS_NoAccessTypePresent

To be pegged when Mobility Management Application Server (MMAS) gets a REGISTER method without P-Access-Network-Info header.

Data Source

Call Server

Source Field

VS.MMAS_NoAccessTypePresent

Source Section

VLR/MMAS

MMAS_UnexpectedAccessType

To be pegged when Mobility Management Application Server (MMAS) gets a REGISTER method with P-Access-Network-Info as anything other than ("3GPP-CDMA2000" or "IEEE-802.11a" or "IEEE-802.11b" or "3GPP2_1X", or "3GPP2_HRPD").

Data Source

Call Server

Source Field

VS.MMAS_UnexpectedAccessType

Source Section

VLR/MMAS

MMASDMSRegistrationAttempt

Upon reception of REGISTER method for a DMS user at the MM AS and prior to invoking the HLR query procedure, the MM AS shall peg the "MMASDMSRegistrationAttempt" measurement count.

Data Source

Call Server

Source Field

VS.MMASDMSRegistrationAttempt

Source Section

SIP

MMASDMSRegistrationSuccess

Upon reception of REGISTER method for a DMS user at the MM AS and upon reception of a successful response to the corresponding HLR query request, the MM AS shall peg the "MMASDMSRegistrationSuccess" measurement count.

Data Source

Call Server

Source Field

VS.MMASDMSRegistrationSuccess

Source Section

SIP

mobileEmrgcyBkdBearer_GSM

This count is pegged when a mobile originated emergency call is blocked due to a lack of a bearer channel on the Iu-CS or A-Interface. It is pegged no more than once for each mobile originated call attempt.

Data Source

Call Server

Source Field

VS.mobileEmrgcyBkdBearer

Source Section

Call Setup

mobileEmrgcyBkdBearer_UMTS

This count is pegged when a mobile originated emergency call is blocked due to a lack of a bearer channel on the Iu-CS or A-Interface. It is pegged no more than once for each mobile originated call attempt.

Data Source

Call Server

© Copyright IBM Corp. 1999, 2009. All rights reserved.

Source Field

VS.mobileEmrgcyBkdBearer

Source Section

Call Setup

mobileEmrgcyOrigFailRLSetup_GSM

This count is pegged when a mobile originated call attempt fails due to a Radio Access Bearer (RAB) setup failure (UMTS) or traffic channel setup failure (GSM). For UMTS this count is pegged when the RAB ASSIGNMENT RESPONSE message sent from the RNC indicates if a RAB setup attempt has failed (RAB Failed to Setup or Modify Item IE). For GSM this count is pegged when the ASSIGNMENT FAILURE message sent from the BSC indicates that the traffic channel setup attempt has failed. This does not include a traffic channel setup failure for a Directed Retry Handover. This count is pegged no more than once for each mobile originated emergency call attempt.

Data Source

Call Server

Source Field

VS.mobileEmrgcyOrigFailRLSetup

Source Section

Call Setup

mobileEmrgcyOrigFailRLSetup_UMTS

This count is pegged when a mobile originated call attempt fails due to a Radio Access Bearer (RAB) setup failure (UMTS) or traffic channel setup failure (GSM). For UMTS this count is pegged when the RAB ASSIGNMENT RESPONSE message sent from the RNC indicates if a RAB setup attempt has failed (RAB Failed to Setup or Modify Item IE). For GSM this count is pegged when the ASSIGNMENT FAILURE message sent from the BSC indicates that the traffic channel setup attempt has failed. This does not include a traffic channel setup failure for a Directed Retry Handover. This count is pegged no more than once for each mobile originated emergency call attempt.

Data Source

Call Server

Source Field

VS.mobileEmrgcyOrigFailRLSetup

Source Section

Call Setup

mobileOrigAttRejected_GSM

This count is pegged for a mobile origination attempt that is rejected by the MSC for reasons other than system resource overload related. This includes the following reasons: * The subscriber failed the Identification Procedure on the IMEI resulting in a CM Service Reject being sent to the UE. - This could be a stolen or cloned mobile * The subscriber failed Authentication Procedure because the authentication parameter was out of range * The subscriber failed the Ciphering / Security Procedure

Data Source

Call Server

Source Field

VS.mobileOrigAttRejected

Source Section

Call Setup

mobileOrigAttRejected_UMTS

This count is pegged for a mobile origination attempt that is rejected by the MSC for reasons other than system resource overload related. This includes the following reasons: * The subscriber failed the Identification Procedure on the IMEI resulting in a CM Service Reject being sent to the UE. - This could be a stolen or cloned mobile * The subscriber failed Authentication Procedure because the authentication parameter was out of range * The subscriber failed the Ciphering / Security Procedure

Data Source

Call Server

Source Field

VS.mobileOrigAttRejected

Source Section

Call Setup

mobileOrigBlkdBearer_GSM

This count is pegged when a mobile originated call is blocked due to a lack of a bearer channel on the Iu-CS or A-Interface. It is pegged no more than once for each mobile originated call

© Copyright IBM Corp. 1999, 2009. All rights reserved.

attempt. This count is not pegged for mobile emergency originations blocked; there is a separate count for that

Data Source

Call Server

Source Field

VS.mobileOrigBlkdBearer

Source Section

Call Setup

mobileOrigBlkdBearer_UMTS

This count is pegged when a mobile originated call is blocked due to a lack of a bearer channel on the Iu-CS or A-Interface. It is pegged no more than once for each mobile originated call attempt. This count is not pegged for mobile emergency originations blocked

Data Source

Call Server

Source Field

VS.mobileOrigBlkdBearer

Source Section

Call Setup

mobileOrigDropBeforeAlert_GSM

Counter moved to "GSM_Cell" entity fr 4.1.7.0.0. This count is pegged when a mobile originated call attempt (including emegergency calls) is dropped or fails for any reason related to a system error after the bearer channel is allocated but before alerting begins. This includes bearer path setup failure signalling path failure or any abnormal release message received from the RNC or BSC after bearer channel is allocated but before alerting is started. This count is pegged no more than once for each mobile originated call attempt and is not be pegged for misdialed numbers, originating mobile hangups or any other originating subscriber related actions.

Data Source

Call Server

Source Field

VS.mobileOrigDropBeforeAlert

Source Section

Call Setup

mobileOrigDropBeforeAlert_UMTS

Counter moved to "RNC_CS" entity fr 4.1.7.0.0. This count is pegged when a mobile originated call attempt (including emegergency calls) is dropped or fails for any reason related to a system error after the bearer channel is allocated but before alerting begins. This includes bearer path setup failure signalling path failure or any abnormal release message received from the RNC or BSC after bearer channel is allocated but before alerting is started. This count is pegged no more than once for each mobile originated call attempt and is not be pegged for misdialed numbers, originating mobile hangups or any other originating subscriber related actions.

Data Source

Call Server

Source Field

VS.mobileOrigDropBeforeAlert

Source Section

Call Setup

mobileOrigDropBeforeAns_GSM

Counter moved to "GSM_Cell" entity fr 4.1.7.0.0. This count is pegged when a mobile originated call attempt (including emergency calls) is dropped or fails for any reason related to a system error after alerting begins but before answer. This includes bearer path failure signalling path failure or any abnormal release message received from the RNC or BSC after alerting is started but before answer. This count is pegged no more than once for each mobile originated call attempt and is not pegged for misdialed numbers, originating mobile hangups or any other subscriber related actions.

Data Source

Call Server

Source Field

VS.mobileOrigDropBeforeAns

© Copyright IBM Corp. 1999, 2009. All rights reserved.

Source Section

Call Setup

mobileOrigDropBeforeAns_UMTS

Counter moved to "RNC_CS" entity fr 4.1.7.0.0. This count is pegged when a mobile originated call attempt (including emergency calls) is dropped or fails for any reason related to a system error after alerting begins but before answer. This includes bearer path failure signalling path failure or any abnormal release message received from the RNC or BSC after alerting is started but before answer. This count is pegged no more than once for each mobile originated call attempt and is not pegged for misdialed numbers, originating mobile hangups or any other subscriber related actions.

Data Source

Call Server

Source Field

VS.mobileOrigDropBeforeAns

Source Section

Call Setup

mobileOrigDroppedAfterAns_GSM

Counter moved to "GSM_Cell" entity fr 4.1.7.0.0. This count is pegged when a mobile originated call (including mobile emergency calls) is dropped after answer. It is pegged if an internal 3GMSC system error bearer path failure or signalling path failure (including SCCP failure) results in a stable call being dropped. This count is NOT pegged due the receipt of a RELEASE / CLEAR REQUEST message from the RNC / BSS; a separate counts exists for that event. This count is pegged no more than once for each mobile originated call.

Data Source

Call Server

Source Field

VS.mobileOrigDroppedAfterAns

Source Section

Call Setup

mobileOrigDroppedAfterAns_UMTS

Counter moved to "RNC_CS" entity fr 4.1.7.0.0. This count is pegged when a mobile originated call (including mobile emergency calls) is dropped after answer. It is pegged if an internal 3GMSC system error bearer path failure or signalling path failure (including SCCP failure) results in a stable call being dropped. This count is NOT pegged due the receipt of a RELEASE / CLEAR REQUEST message from the RNC / BSS; a separate counts exists for that event. This count is pegged no more than once for each mobile originated call.

Data Source

Call Server

Source Field

VS.mobileOrigDroppedAfterAns

Source Section

Call Setup

mobileOrigDroppedRAN_GSM

This count is pegged when a mobile originated call is dropped due to a problem in the radio access network. For UMTS this count is pegged on receipt of the RELEASE REQUEST message on the Iu interface which indicates that a dropped call has been detected in the radio access network. For GSM this count is pegged on receipt of the CLEAR REQUEST message on the A-interface which indicates that a dropped call has been detected in the radio access network. If an Inter-MSC Handover completes and then an IU RELEASE REQUEST/CLEAR REQUEST is received by MSC-B MSC-B will forward this message back to MSC-A. In this case MSC-A will release the call and peg the count accordingly. MSC-B also receives the RELEASE or CLEAR REQUEST message but it does not peg the count. This count is pegged no more than once for each mobile originated call attempt that was successfully setup.

Data Source

Call Server

Source Field

VS.mobileOrigDroppedRAN

Source Section

Call Setup

mobileOrigDroppedRAN_UMTS

This count is pegged when a mobile originated call is dropped due to a problem in the radio access network. For UMTS this count is pegged on receipt of the RELEASE REQUEST

© Copyright IBM Corp. 1999, 2009. All rights reserved.

message on the Iu interface which indicates that a dropped call has been detected in the radio access network. For GSM this count is pegged on receipt of the CLEAR REQUEST message on the A-interface which indicates that a dropped call has been detected in the radio access network. If an Inter-MSC Handover completes and then an IU RELEASE REQUEST/CLEAR REQUEST is received by MSC-B MSC-B will forward this message back to MSC-A. In this case MSC-A will release the call and peg the count accordingly. MSC-B also receives the RELEASE or CLEAR REQUEST message but it does not peg the count. This count is pegged no more than once for each mobile originated call attempt that was successfully setup.

Data Source

Call Server

Source Field

VS.mobileOrigDroppedRAN

Source Section

Call Setup

mobileOrigFailRLSetup_GSM

This count is pegged when a mobile originated call attempt fails due to a Radio Access Bearer (RAB) setup failure (UMTS) or traffic channel setup failure (GSM). For UMTS this count is pegged when the RAB ASSIGNMENT RESPONSE message sent from the RNC indicates if a RAB setup attempt has failed (RAB Failed to Setup or Modify Item IE). For GSM this count is pegged when the ASSIGNMENT FAILURE message sent from the BSC indicates that the traffic channel setup attempt has failed. This does not include a traffic channel setup failure for a Directed Retry Handover. This count is pegged no more than once for each mobile originated call attempt. This count is not pegged for mobile emergency originations blocked; there is a separate count for that.

Data Source

Call Server

Source Field

VS.mobileOrigFailRLSetup

Source Section

Call Setup

mobileOrigFailRLSetup_UMTS

This count is pegged when a mobile originated call attempt fails due to a Radio Access Bearer (RAB) setup failure (UMTS) or traffic channel setup failure (GSM). For UMTS this count is pegged when the RAB ASSIGNMENT RESPONSE message sent from the RNC indicates if a

RAB setup attempt has failed (RAB Failed to Setup or Modify Item IE). For GSM this count is pegged when the ASSIGNMENT FAILURE message sent from the BSC indicates that the traffic channel setup attempt has failed. This does not include a traffic channel setup failure for a Directed Retry Handover. This count is pegged no more than once for each mobile originated call attempt. This count is not pegged for mobile emergency originations blocked; there is a separate count for that.

Data Source

Call Server

Source Field

VS.mobileOrigFailRLSetup

Source Section

Call Setup

mobileTermAttRejected_GSM

This count is pegged for a mobile termination attempt that is rejected by the MSC for reasons other than system resource overload related. This includes the following reasons: * The subscriber failed the Identification Procedure on the IMEI resulting in a service reject being sent to the UE. - This could be a stolen or cloned mobile * The subscriber failed Authentication Procedure because the authentication parameter was out of range.

Data Source

Call Server

Source Field

VS.mobileTermAttRejected

Source Section

Call Setup

mobileTermAttRejected_UMTS

This count is pegged for a mobile termination attempt that is rejected by the MSC for reasons other than system resource overload related. This includes the following reasons: * The subscriber failed the Identification Procedure on the IMEI resulting in a service reject being sent to the UE. - This could be a stolen or cloned mobile * The subscriber failed Authentication Procedure because the authentication parameter was out of range.

Data Source

Call Server

© Copyright IBM Corp. 1999, 2009. All rights reserved.

Source Field

VS.mobileTermAttRejected

Source Section

Call Setup

mobileTermBlkdBearer_GSM

This count is pegged when a mobile terminated call attempt is blocked due to a lack of a bearer channel on the Iu-CS or A-Interface. It is pegged no more than once for each mobile terminated call attempt.

Data Source

Call Server

Source Field

VS.mobileTermBlkdBearer

Source Section

Call Setup

mobileTermBlkdBearer_UMTS

This count is pegged when a mobile terminated call attempt is blocked due to a lack of a bearer channel on the Iu-CS or A-Interface. It is pegged no more than once for each mobile terminated call attempt.

Data Source

Call Server

Source Field

VS.mobileTermBlkdBearer

Source Section

Call Setup

mobileTermDropBeforeAlert_GSM

Counter moved to "GSM_Cell" entity fr 4.1.7.0.0. This count is pegged when a mobile terminated call attempt is dropped or fails for any reason related to a system error after the bearer channel is allocated but before alerting begins. This includes bearer path setup failure, signalling path failure or any abnormal release message received from the RNC or BSC after bearer channel is allocated but before alerting is started. This count is pegged no more than

once for each mobile terminated call attempt and is not pegged for misdialed numbers or any other subscriber related actions.

Data Source

Call Server

Source Field

VS.mobileTermDropBeforeAlert

Source Section

Call Setup

mobileTermDropBeforeAlert_UMTS

Counter moved to "RNC_CS" entity fr 4.1.7.0.0. This count is pegged when a mobile terminated call attempt is dropped or fails for any reason related to a system error after the bearer channel is allocated but before alerting begins. This includes bearer path setup failure, signalling path failure or any abnormal release message received from the RNC or BSC after bearer channel is allocated but before alerting is started. This count is pegged no more than once for each mobile terminated call attempt and is not pegged for misdialed numbers or any other subscriber related actions.

Data Source

Call Server

Source Field

VS.mobileTermDropBeforeAlert

Source Section

Call Setup

mobileTermDropBeforeAns_GSM

Counter moved to "GSM_Cell" entity fr 4.1.7.0.0. This count is pegged when a mobile terminated call attempt is dropped or fails for any reason related to a system error after alerting begins but before answer. This includes bearer path failure, signalling path failure or any abnormal release message received from the RNC or BSC after alerting is started but before answer. This count is pegged no more than once for each mobile originated call attempt and is be pegged for misdialed numbers or any other subscriber related actions.

Data Source

Call Server

© Copyright IBM Corp. 1999, 2009. All rights reserved.

Source Field

VS.mobileTermDropBeforeAns

Source Section

Call Setup

mobileTermDropBeforeAns_UMTS

Counter moved to "RNC_CS" entity fr 4.1.7.0.0. This count is pegged when a mobile terminated call attempt is dropped or fails for any reason related to a system error after alerting begins but before answer. This includes bearer path failure, signalling path failure or any abnormal release message received from the RNC or BSC after alerting is started but before answer. This count is pegged no more than once for each mobile originated call attempt and is be pegged for misdialed numbers or any other subscriber related actions.

Data Source

Call Server

Source Field

VS.mobileTermDropBeforeAns

Source Section

Call Setup

mobileTermDroppedAfterAns_GSM

Counter moved to "GSM_Cell" entity fr 4.1.7.0.0. This count is pegged when a mobile terminated call (including mobile emergency calls) is dropped after answer. It is pegged if an internal 3GMSC system error bearer path failure or signalling path failure (including SCCP failure) results in a stable call being dropped. This count is NOT be pegged due the receipt of a RELEASE / CLEAR REQUEST message from the RNC / BSS; a separate count exists for that event. This count is pegged no more than once for each mobile terminated call.

Data Source

Call Server

Source Field

VS.mobileTermDroppedAfterAns

Source Section

Call Setup

mobileTermDroppedAfterAns_UMTS

Counter moved to "RNC_CS" entity fr 4.1.7.0.0. This count is pegged when a mobile terminated call (including mobile emergency calls) is dropped after answer. It is pegged if an internal 3GMSC system error bearer path failure or signalling path failure (including SCCP failure) results in a stable call being dropped. This count is NOT be pegged due the receipt of a RELEASE / CLEAR REQUEST message from the RNC / BSS; a separate count exists for that event. This count is pegged no more than once for each mobile terminated call.

Data Source

Call Server

Source Field

VS.mobileTermDroppedAfterAns

Source Section

Call Setup

mobileTermDroppedRAN_GSM

This count is pegged when a mobile originated call is dropped due to a problem in the radio access network. For UMTS this count is pegged on receipt of the RELEASE REQUEST message on the Iu interface which indicates that a dropped call has been detected in the radio access network. For GSM this count is pegged on receipt of the CLEAR REQUEST message on the A-interface which indicates that a dropped call has been detected in the radio access network. If an Inter-MSC Handover completes and then an IU RELEASE REQUEST/CLEAR REQUEST is received by MSC-B MSC-B will forward this message back to MSC-A. In this case MSC-A will release the call and peg the count accordingly. MSC-B also receives the RELEASE or CLEAR REQUEST message but it does not peg the count. This count is pegged no more than once for each mobile terminated call attempt that was successfully setup.

Data Source

Call Server

Source Field

VS.mobileTermDroppedRAN

Source Section

Call Setup

mobileTermDroppedRAN_UMTS

This count is pegged when a mobile originated call is dropped due to a problem in the radio access network. For UMTS this count is pegged on receipt of the RELEASE REQUEST

© Copyright IBM Corp. 1999, 2009. All rights reserved.

message on the Iu interface which indicates that a dropped call has been detected in the radio access network. For GSM this count is pegged on receipt of the CLEAR REQUEST message on the A-interface which indicates that a dropped call has been detected in the radio access network. If an Inter-MSC Handover completes and then an IU RELEASE REQUEST/CLEAR REQUEST is received by MSC-B MSC-B will forward this message back to MSC-A. In this case MSC-A will release the call and peg the count accordingly. MSC-B also receives the RELEASE or CLEAR REQUEST message but it does not peg the count. This count is pegged no more than once for each mobile terminated call attempt that was successfully setup.

Data Source

Call Server

Source Field

VS.mobileTermDroppedRAN

Source Section

Call Setup

mobileTermFailRLSetup_GSM

This count is pegged when a mobile terminated call attempt fails due to a Radio Access Bearer (RAB) setup failure (UMTS) or traffic channel setup failure (GSM). For UMTS this count is pegged when the RAB ASSIGNMENT RESPONSE message sent from the RNC indicates if a RAB setup attempt has failed (RAB Failed to Setup or Modify Item IE). For GSM this count is pegged when the ASSIGNMENT FAILURE message sent from the BSC indicates that the traffic channel setup attempt has failed. This does not include a traffic channel setup failure for a Directed Retry Handover. This count is pegged no more than once for each mobile terminated call attempt.

Data Source

Call Server

Source Field

VS.mobileTermFailRLSetup

Source Section

Call Setup

mobileTermFailRLSetup_UMTS

This count is pegged when a mobile terminated call attempt fails due to a Radio Access Bearer (RAB) setup failure (UMTS) or traffic channel setup failure (GSM). For UMTS this count is pegged when the RAB ASSIGNMENT RESPONSE message sent from the RNC indicates if a RAB setup attempt has failed (RAB Failed to Setup or Modify Item IE). For GSM this count is

pegged when the ASSIGNMENT FAILURE message sent from the BSC indicates that the traffic channel setup attempt has failed. This does not include a traffic channel setup failure for a Directed Retry Handover. This count is pegged no more than once for each mobile terminated call attempt.

Data Source

Call Server

Source Field

VS.mobileTermFailRLSetup

Source Section

Call Setup

mobTermAttsBlkdOLC

Mobile Terminations Attempts Blocked by Overload Control

Data Source

Call Server

Source Field

VS.mobTermAttsBlkdOLC

Source Section

Overload Control

mobTermSMSRelBlkdOLC

No vendor documentation could be found for this metric.

Data Source

Call Server

Source Field

VS.mobTermSMSRelBlkdOLC

Source Section

Overload Control

© Copyright IBM Corp. 1999, 2009. All rights reserved.

MOFailAptyAbandonRABSetup

Pegged when a mobile origination attempt fails because the A Party abandons the call attempt during the RAB setup procedure.

Data Source

Call Server

Source Field

VS.MOFailAptyAbandonRABSetup

Source Section

Call Setup

MOFailTMSIReallocTO

Pegged when a mobile origination attempt fails due a TMSI Reallocation Timeout.

Data Source

Call Server

Source Field

VS.MOFailTMSIReallocTO

Source Section

Call Setup

MOLRReqForAstcData

Mobile Originated-Location Requests (MO-LR) for assistance data.

Data Source

Call Server

Source Field

VS.MOLRReqForAstcData

Source Section

GSM Location Services for Serving Mobile Location Center (SMLC)

MOLRReqForDecprKeys

Mobile Originated-Location Requests (MO-LR) for De-ciperhering keys.

Data Source

Call Server

Source Field

VS.MOLRReqForDecprKeys

Source Section

GSM Location Services for Serving Mobile Location Center (SMLC)

MORejUnsubsServ_GSM

This count shall be pegged for mobile origination attempts, both voice and circuit switched data, that fail because the subscriber did not have a subscription to the requested service.

Data Source

Call Server

Source Field

VS.MORejUnsubsServ

Source Section

Per SS7 Service Member, per Technology Type

MORejUnsubsServ_UMTS

This count shall be pegged for mobile origination attempts, both voice and circuit switched data, that fail because the subscriber did not have a subscription to the requested service.

Data Source

Call Server

Source Field

VS.MORejUnsubsServ

Source Section

Per SS7 Service Member, per Technology Type

© Copyright IBM Corp. 1999, 2009. All rights reserved.

MORejUnsuppServ_GSM

This count shall be pegged for mobile origination attempts, both voice and circuit switched data, that fail due to a request for a basic service that is not supported by the MSC.

Data Source

Call Server

Source Field

VS.MORejUnsuppServ

Source Section

Per SS7 Service Member, per Technology Type

MORejUnsuppServ_UMTS

This count shall be pegged for mobile origination attempts, both voice and circuit switched data, that fail due to a request for a basic service that is not supported by the MSC.

Data Source

Call Server

Source Field

VS.MORejUnsuppServ

Source Section

Per SS7 Service Member, per Technology Type

msrcBlkdOLC

No vendor documentation could be found for this metric.

Data Source

Call Server

Source Field

VS.msrcBlkdOLC

Source Section

Overload Control

MTFailTMSIReallocTO

Pegged when a mobile termination attempt fails due a TMSI Reallocation Timeout.

Data Source

Call Server

Source Field

VS.MTFailTMSIReallocTO

Source Section

Call Setup

MTRejUnsubsServ_GSM

This count shall be pegged for mobile termination attempts upon receiving a CALL CONFIRM message with an unsubscribed Basic Service.

Data Source

Call Server

Source Field

VS.MTRejUnsubsServ

Source Section

Per SS7 Service Member, per Technology Type

MTRejUnsubsServ_UMTS

This count shall be pegged for mobile termination attempts upon receiving a CALL CONFIRM message with an unsubscribed Basic Service.

Data Source

Call Server

Source Field

VS.MTRejUnsubsServ

Source Section

Per SS7 Service Member, per Technology Type

© Copyright IBM Corp. 1999, 2009. All rights reserved.

MTRejUnsuppServ_GSM

his count shall be pegged for mobile termination attempts upon receiving a CALL CONFIRM message with an unsupported Basic Service. Note: This is not pegged in MAPSYS when MAP ProvideRoamingNumber contains unsupported BCs, or when the ISUP IAM contains Unsupported BC in the USI.

Data Source

Call Server

Source Field

VS.MTRejUnsuppServ

Source Section

Per SS7 Service Member, per Technology Type

MTRejUnsuppServ_UMTS

his count shall be pegged for mobile termination attempts upon receiving a CALL CONFIRM message with an unsupported Basic Service. Note: This is not pegged in MAPSYS when MAP ProvideRoamingNumber contains unsupported BCs, or when the ISUP IAM contains Unsupported BC in the USI.

Data Source

Call Server

Source Field

VS.MTRejUnsuppServ

Source Section

Per SS7 Service Member, per Technology Type

mtSMSRejMNRFnoPage

The number of times the MSC rejects a MT-SMS message due to the Mobile Not Reachable Flag. It is pegged when the MT-SMS message is intentionally rejected due to the MSC-determined condition: MNRF (which is set when a previous MT-SMS was attempted but was unsuccesful due to no successful paging response received). In this case, the MSC sends a MT-SMS negative acknowledgement indicating no page response; however no paging occurred. This PM count is not pegged when a MT-SMS is rejected because the user is 'implicitly detached'.

Data Source

Call Server

Source Field

VS.mtSMSRejMNRFnoPage

Source Section

Per VLR Service Member

NAttDirRetryGSM

Number of NS/EP call terminations for which Directed Retry Handover to the GSM network has been attempted. This peg count is incremented once for each Directed Retry Handover attempt of NS/EP call terminations to the GSM network.

Data Source

Call Server

Source Field

NAttDirRetryGSM

Source Section

Wireless Priority Service

nbiGetBulkRequests

Pegged for each SNMP Get Bulk request received from a northbound interface.

Data Source

Call Server

Source Field

VS.nbiGetBulkRequests

Source Section

MI Profiling

nbiGetNextRequests

Pegged for each SNMP Get Next request received from a northbound interface.

© Copyright IBM Corp. 1999, 2009. All rights reserved.

Data Source

Call Server

Source Field

VS.nbiGetNextRequests

Source Section

MI Profiling

nbiGetRequests

Pegged for each SNMP Get request received from a northbound interface.

Data Source

Call Server

Source Field

VS.nbiGetRequests

Source Section

MI Profiling

nbrOfBlackAnsInMSC

Number of black answers in MSC

Data Source

Call Server

Source Field

nbrOfBlackAnsInMSC

Source Section

IMEI Checks

nbrOfClassMarkUpdates_GSM

Number of class mark updates (GSM Technology Type)

Data Source

Call Server

Source Field

nbrOfClassMarkUpdates

Source Section

Mobile Call Setup (GSM)

nbrOfClassMarkUpdates_UMTS

Number of class mark updates (UMTS Technology Type)

Data Source

Call Server

Source Field

nbrOfClassMarkUpdates

Source Section

Mobile Call Setup (UMTS)

nbrOfGreyAnsInMSC

Number of grey answers in MSC

Data Source

Call Server

Source Field

nbrOfGreyAnsInMSC

Source Section

IMEI Checks

nbrOfTransCheckIMEIRequests

Number of transmitted check IMEI request

Data Source

Call Server

Source Field

nbrOfTransCheckIMEIRequests

© Copyright IBM Corp. 1999, 2009. All rights reserved.

Source Section

IMEI Checks

nbrOfUnknownIMEIAnsInMSC

Number of unknown IMEI answers

Data Source

Call Server

Source Field

nbrOfUnknownIMEIAnsInMSC

Source Section

IMEI Checks

nbrOfWhiteAnsInMSC

Number of white answers in MSC

Data Source

Call Server

Source Field

nbrOfWhiteAnsInMSC

Source Section

IMEI Checks

newAlarms

Pegged for each new alarm and also for alarms that have cleared and are still in the MI db, and have fired again.

Data Source

Call Server

Source Field

VS.newAlarms

Source Section

MI Profiling

NINC

The number of NS/EP calls received on incoming trunks.

Data Source

Call Server

Source Field

VS.NINC

Source Section

Wireless Priority Service

NINCASSG

This count is pegged for each National Security & Emergency Preparedness (NS/EP) voice or CSD call termination attempt that is assigned a radio traffic channel (with or without queuing). This count is pegged only if the Wireless Priority Service parameter is set to yes.

Data Source

Call Server

Source Field

VS.NINCASSG

Source Section

Wireless Priority Service

NINCTERM

This count is pegged for each NS/EP (NINCTERM) call received on incoming trunks whose destination is a MS served by that MSC/VLR.

Data Source

Call Server

Source Field

VS.NINCTERM

© Copyright IBM Corp. 1999, 2009. All rights reserved.

Source Section

Wireless Priority Service

niUSSDBlkdOLC

No vendor documentation could be found for this metric.

Data Source

Call Server

Source Field

VS.niUSSDBlkdOLC

Source Section

Overload Control

NNOCKT

The total number of NS/EP calls that cannot be routed on any trunk to a point outside the MSC/VLR because no idle trunks are available. This peg count is incremented once per call when the MSC/VLR determines that no additional routes are available to attempt to route the call and final treatment is provided.

Data Source

Call Server

Source Field

VS.NNOCKT

Source Section

Wireless Priority Service

NNOPRTY

This count is pegged for each IAM for incoming NS/EP call is received without the Precedence parameter.

Data Source

Call Server

Source Field

VS.NNOPRTY

Source Section

Wireless Priority Service

noAnsMobileTerminatingCalls_GSM

Number of successful mobile termination calls not answered by UE (GSM Technology Type)

Data Source

Call Server

Source Field

VS.noAnsMobileTerminatingCalls

Source Section

Mobile Call Setup (GSM)

noAnsMobileTerminatingCalls_UMTS

Number of successful mobile termination calls not answered by UE (UMTS Technology Type)

Data Source

Call Server

Source Field

VS.noAnsMobileTerminatingCalls

Source Section

Mobile Call Setup (UMTS)

noPageResponse

Timeout on waiting for page response message at the second paging attempt. Feature interaction issue (CFNRc timer or basic call page response timer) to be used. This count is required to support the mobile termination call attempt analysis.

Data Source

Call Server

Source Field

VS.noPageResponse

© Copyright IBM Corp. 1999, 2009. All rights reserved.

Source Section

Paging

NOUTGO

The number of calls for which trunks are successfully set up to a succeeding switch. This peg count is incremented by one for each NS/EP origination attempt that is successfully routed on an outgoing trunk to another switch. Successful routing includes successful trunk siezure and call setup signaling toward the succeeding switch.

Data Source

Call Server

Source Field

VS.NOUTGO

Source Section

Wireless Priority Service

NOUTIXC

The total number of NS/EP calls for which trunks are successfully set up towards an IXC. This peg count is incremented by one for each NS/EP call origination attempt that is successfully routed on a direct or alternate route to an IXC switch. Successful routing includes successful trunk siezure and call setup signaling toward the succeeding switch.

Data Source

Call Server

Source Field

VS.NOUTIXC

Source Section

Wireless Priority Service

NOUTIXCNC

The number of NS/EP calls that cannot be routed on a direct or alternate route towards an IXC because no idle trunks are available. This peg count is incremented once per call when the MSC/VLR determines that no additional routes are available to attempt to route the call and final treatment is provided.

Data Source

Call Server

Source Field

VS.NOUTIXCNC

Source Section

Wireless Priority Service

NPCallForPortedSub

Number Portability - Calls for Ported Subscribers

Data Source

Call Server

Source Field

VS.NPCallForPortedSub

Source Section

Number Portability

NPCallSubPortedInNet

Number Portability - Calls for Subscribers Ported In-Network

Data Source

Call Server

Source Field

VS.NPCallSubPortedInNet

Source Section

Number Portability

NPDataInconsist

Number Portability call attempts fail due to Data Inconsistencies

Data Source

Call Server

© Copyright IBM Corp. 1999, 2009. All rights reserved.

Source Field

VS.NPDataInconsist

Source Section

Number Portability

NPISUPRelInconsist

Number Portability - ISUP Release Data Inconsistencies

Data Source

Call Server

Source Field

VS.NPISUPRelInconsist

Source Section

Number Portability

NPQueryFailure

Number Portability Query Failures

Data Source

Call Server

Source Field

VS.NPQueryFailure

Source Section

Number Portability

NPQueryInitiated

Number Portability Queries Initiated

Data Source

Call Server

Source Field

VS.NPQueryInitiated

Source Section

Number Portability

nprsCACPolicyTblDlt

No vendor documentation could be found for this metric.

Data Source

Call Server

Source Field

VS.nprsCACPolicyTblDlt

Source Section

VLR

nprsCACPolicyTblExpRmv

No vendor documentation could be found for this metric.

Data Source

Call Server

Source Field

VS.nprsCACPolicyTblExpRmv

Source Section

VLR

nprsCACPolicyTblIns

No vendor documentation could be found for this metric.

Data Source

Call Server

Source Field

VS.nprsCACPolicyTblIns

Source Section

VLR

© Copyright IBM Corp. 1999, 2009. All rights reserved.

nprsCACPolicyTblInsTtlUsr

No vendor documentation could be found for this metric.

Data Source

Call Server

Source Field

VS.nprsCACPolicyTblInsTtlUsr

Source Section

VLR

nprsCACPolicyTblMdf

No vendor documentation could be found for this metric.

Data Source

Call Server

Source Field

VS.nprsCACPolicyTblMdf

Source Section

VLR

NSuccDirRetryGSM

Total number of NS/EP call terminations for which Directed Retry Handover to the GSM network was successful. This count is incremented once for each successful Directed Retry Handover of NS/EP call termination to the GSM network.

Data Source

Call Server

Source Field

NSuccDirRetryGSM

Source Section

Wireless Priority Service

NT_RLP_Attempt

Pegged for each initial RLP attempt for Circuit Switched Data calls. Not pegged for attempts to reestablish the RLP, just the establishment.

Data Source

Call Server

Source Field

VS.NT_RLP_Attempt

Source Section

Circuit Switched Data

NT_RLP_Success

Pegged for each successful RLP attempt for Circuit Switched Data calls. Not pegged for successful RLP reestablishments.

Data Source

Call Server

Source Field

VS.NT_RLP_Success

Source Section

Circuit Switched Data

NTATTMPT

The number of calls that the switch recognizes as NS/EP calls that require trunks to points outside the MSC.

Data Source

Call Server

Source Field

VS.NTATTMPT

Source Section

Wireless Priority Service

© Copyright IBM Corp. 1999, 2009. All rights reserved.

NTERM

This count is pegged for each NS/EP (NTERM) call whose destination is an MS served by that MSC/VLR.

Data Source

Call Server

Source Field

VS.NTERM

Source Section

Wireless Priority Service

NTQABAND

The total number of times that NS/EP calls are removed from a trunk queue because the MS has disconnected the call or radio contact with the MS has been lost. This peg count is incremented by one each time a queued NS/EP calls origination attempt is removed from the queue because the call attempt is abandoned or released (e.g. the calling party has disconnected the call or the system determines that radio contact with the calling MS/UE has been lost).

Data Source

Call Server

Source Field

VS.NTQABAND

Source Section

Wireless Priority Service

NTQOVFL

The number of times that NS/EP calls fail to queue for a trunk in a trunk group because the maximum trunk queue length for that trunk group has been reached. This peg count is incremented by one each time an NS/EP call origination attempt is not queued for an outgoing trunk to a succeding switch because maximum trunk queue length for that trunk group has been reached. Since trunk queuing can be attempted more than once for an NS/EP origination attempt this count can be incremented more than once for a specific NS/EP outgoing call.

Data Source

Call Server

Source Field

VS.NTQOVFL

Source Section

Wireless Priority Service

NTQQUED

The total number of NS/EP calls that are queued for a trunk to points outside the MSC/VLR. This peg count is incremented by one each time an NS/EP call origination attempt is queued for an outgoing trunk to a succeding switch. Since an NS/EP outgoing call can be queued multiple times for a trunk this count can be incremented more than once for a specific NS/EP outgoing call.

Data Source

Call Server

Source Field

VS.NTQQUED

Source Section

Wireless Priority Service

NTQTOUT

The number of times that NS/EP calls are removed from a trunk queue because the call exceeded the maximum trunk queue time for that trunk group. This peg count is incremented by one each time a queued NS/EP call origination attempt is removed from the queue because the call exceeded the maximum trunk queue time for that trunk group. Since trunk queuing can be attempted more than once for an NS/EP origination attempt this count can be incremented more than once for a specific NS/EP outgoing call.

Data Source

Call Server

Source Field

VS.NTQTOUT

Source Section

Wireless Priority Service

© Copyright IBM Corp. 1999, 2009. All rights reserved.

numOfScanSample

Number of 100-second usage scans included in the configurable interval usage scan measurements.

Data Source

Call Server

Source Field

VS.numOfScanSample

Source Section

Call Processing Application

OAnswerINVOKESent

A WIN OAnswer Invoke message is sent by the Feature Server to the SCP to indicate the originating call has been answered.

Data Source

Call Server

Source Field

VS.OAnswerINVOKESent

Source Section

Packet Gateway ANSI-41 Call Delivery

ODisconnectINVOKESent

An ODisconnect Invoke message is sent by the Feature Server to the SCP to indicate the call has been disconnected.

Data Source

Call Server

Source Field

VS.ODisconnectINVOKESent

Source Section

Packet Gateway ANSI-41 Call Delivery

ODisconnectINVREJRcvd

The Feature Server receives a Reject message from the SCP in response to an ODisconnect Invoke message.

Data Source

Call Server

Source Field

VS.ODisconnectINVREJRcvd

Source Section

Packet Gateway ANSI-41 Call Delivery

ODisconnectINVRETError

The Feature Server receives a Return Error message from the SCP in response to an ODisconnect Invoke message.

Data Source

Call Server

Source Field

VS.ODisconnectINVRETError

Source Section

Packet Gateway ANSI-41 Call Delivery

ODisconnectMsgRouteFail

The Feature Server receives a Route Failure from the 7Device Server in response to an ODisconnect Invoke message.

Data Source

Call Server

Source Field

VS.ODisconnectMsgRouteFail

Source Section

Packet Gateway ANSI-41 Call Delivery

© Copyright IBM Corp. 1999, 2009. All rights reserved.

ODisconnectMsgTO

The Feature Server times-out waiting for a response from the SCP after sending an ODisconnect message.

Data Source

Call Server

Source Field

VS.ODisconnectMsgTO

Source Section

Packet Gateway ANSI-41 Call Delivery

origLCS3rdPartyXferRequest

Mobile Originated Location Request Attempt - Transfer to 3rd Party Request

Data Source

Call Server

Source Field

VS.origLCS3rdPartyXferRequest

Source Section

Mobile Originated Location Services

origLCSLocReqAtts

Mobile Originated Location Request Attempts

Data Source

Call Server

Source Field

VS.origLCSLocReqAtts

Source Section

Mobile Originated Location Services

origLCSLocReqSucc

Mobile Originated Location Requests Succeeded

Data Source

Call Server

Source Field

VS.origLCSLocReqSucc

Source Section

Mobile Originated Location Services

origLCSSucc3rdPartyXfer

Mobile Originated Location Request - Successful Transfer to 3rd Party

Data Source

Call Server

Source Field

VS.origLCSSucc3rdPartyXfer

Source Section

Mobile Originated Location Services

outCallAttL4

This count is pegged when a PSTN outgoing call attempt was received at L4 and L4 is successfully intialized for the call.

Data Source

Call Server

Source Field

VS.outCallAttL4

Source Section

Capacity Engineering

© Copyright IBM Corp. 1999, 2009. All rights reserved.

outCallAttL5

This count is pegged when a PSTN outgoing call attempt was received at L5 and L5 is successfully initialzed for the call. Note: A mobile terminating L5 attempt is also possible on a provisioned NCS and in the event of certain failures it is not possible to distinguish an outgoing PSTN call from a mobile terminated call. In this case it is OK not to peg this count.

Data Source

Call Server

Source Field

VS.outCallAttL5

Source Section

Capacity Engineering

peakBaseCpuUsage

Represents the peak CPU utilization for a set of core processes (i.e. processes which may contribute to CPU overloads due to the type of activity or scheduling method). For diskless cards the scan rate will be 400ms (milliseconds). For diskful cards the scan rate will be 10s (seconds) scan. For each scan over the course of a report interval, the peak CPU utilization for the 'core' processes is captured per equipped host and reported as the Peak Core Processes CPU Utilization expressed as a percentage.

Data Source

Call Server

Source Field

VS.peakNEcoreProcCpuUsage, VS.peakBaseCpuUsage

Source Section

Capacity Engineering

peakCpuUsage

Represents the peak CPU utilization (i.e. 100 - idle task). For diskless cards the scan rate will be 400ms (milliseconds). For diskfull cards the scan rate will be 10s (seconds) scan. For each scan over the course of a report interval, the peak CPU utilization level is captured and reported as the Peak CPU Utilization.

Data Source

Call Server

Source Field

VS.peakNECpuUsage, VS.peakCpuUsage

Source Section

Capacity Engineering

peakHONumUsage

This count represents the peak number of HO numbers in use over the reporting period. The number of HO numbers in use is sampled every 10 seconds. The value of this count is the highest of these in-use values seen during the reporting period.

Data Source

Call Server

Source Field

VS.peakHONumUsage

Source Section

Handover

peakMSRNUsage

This count represents the peak number of HO numbers in use over the reporting period. The number of HO numbers in use is sampled every 10 seconds. The value of this count is the highest of these in-use values seen during the reporting period.

Data Source

Call Server

Source Field

VS.peakMSRNUsage

Source Section

Handover

peakNumVLRSubs

This count represents the peak number of subscribers registered in the VLR seen during the reporting period. The number of registered VLR subscribers is sampled every 10 seconds and the value of this count is the highest of these sampled values seen during the reporting period.

© Copyright IBM Corp. 1999, 2009. All rights reserved.

Data Source

Call Server

Source Field

VS.peakNumVlrSubs

Source Section

VLR

PPLATCallALWatPPP

Pre-paid Loop-Around Call Attempts Allowed at PPP

Data Source

Call Server

Source Field

VS.PPLATCallALWatPPP

Source Section

Pre-Paid Bypass and Loop Around Trunk

PPLATCallAttstoPPP

Pre-Paid Loop-Around Trunk (LAT) Call Attempts Sent to PPP.

Data Source

Call Server

Source Field

VS.PPLATCallAttstoPPP

Source Section

Pre-Paid Bypass and Loop Around Trunk

preSelCarrRtgAtt

This count is pegged for a mobile originated long-distance call for which the routing has to be done based on the pre-selected dialed carrier and circuit code.

Data Source

Call Server

Source Field

VS.preSelCarrRtgAtt

Source Section

Pre-selected Carrier Routing

RCHerrorRcvdInVMSC

Optimal Routing for Late Call Forwarding Requests unsuccessful at the VMSC

Data Source

Call Server

Source Field

VS.RCHerrorRcvdInVMSC

Source Section

Resumed Call Handling Service

RCHReqRcvdInGMSC

Resumed Call Handling Request Received in GMSC

Data Source

Call Server

Source Field

VS.RCHReqRcvdInGMSC

Source Section

Resumed Call Handling Service

RCHReqSentByVMSC

Optimal Routing for Late Call Forwarding Requests Attempted by the VMSC

Data Source

Call Server

© Copyright IBM Corp. 1999, 2009. All rights reserved.

Source Field

VS.RCHReqSentByVMSC

Source Section

Resumed Call Handling Service

reInitServiceManual

All manually initiated card initializations that have occurred on the particular card on the SSP Shelf .

Data Source

Call Server

Source Field

VS.reInitServiceManual

Source Section

Switch Health

reInitServiceSelf

This is the count of card initializations

Data Source

Call Server

Source Field

VS.reInitServiceSelf

Source Section

Switch Health

ReqForAuthSetsSentToHLRReplenish

Requests for Authentication Sets Sent to HLR - Replenish

Data Source

Call Server

Source Field

VS.ReqForAuthSetsSentToHLRReplenish

Source Section

Location Update

ReqForAuthSetsSentToHLRReSync

Requests for Authentication Sets Sent to HLR - Resynchronization

Data Source

Call Server

Source Field

VS.ReqForAuthSetsSentToHLRReSync

Source Section

Location Update

ReqForAuthSetsSentToHLRTripletsDisc

Requests for Authentication Sets Sent to HLR - UMTS Triplets Discarded

Data Source

Call Server

Source Field

VS.ReqForAuthSetsSentToHLRTripletsDisc

Source Section

Location Update

resetHLRtoVLR

Pegged whenever a VLR receives a RESET from an HLR. An HLR Reset will be processed by each VLR host, and each VLR host in turn pegs this count.

Data Source

Call Server

© Copyright IBM Corp. 1999, 2009. All rights reserved.

Source Field

VS.resetHLRtoVLR

Source Section

VLR Record Maintenance

restartTask

All task initializations on a card on the SSP Shelf. This does not include the initial start up of the multiple tasks that can be running on the card.

Data Source

Call Server

Source Field

VS.restartTask

Source Section

Switch Health

restoreDataVLRtoHLR

Pegged each time a RestoreData message is sent from the VLR to the HLR to restore a subscriber's entry in the VLR.

Data Source

Call Server

Source Field

VS.restoreDataVLRtoHLR

Source Section

VLR Record Maintenance

SCTPConnAtt

This count shall be pegged when an SCTP association attempt is being made.

Data Source

Call Server

Source Field

VS.SCTPConnAtt

Source Section

Per SS7 Service Member

SCTPDataReceive

The number of SCTP data chunks received from the IP network.

Data Source

Call Server

Source Field

VS.SCTPDataReceive

Source Section

Per SS7 Service Member

SCTPDataReceiveSucc

The number of received SCTP data chunks delivered to upper layer.

Data Source

Call Server

Source Field

VS.SCTPDataReceiveSucc

Source Section

Per SS7 Service Member

SCTPDataTransmit

The number of SCTP data chunk transfer requests from the upper layer.

Data Source

Call Server

Source Field

VS.SCTPDataTransmit

© Copyright IBM Corp. 1999, 2009. All rights reserved.

Source Section

Per SS7 Service Member

SCTPDataTransmitSucc

The number of transmitted SCTP data chunks that were acknowledged.

Data Source

Call Server

Source Field

VS.SCTPDataTransmitSucc

Source Section

Per SS7 Service Member

SCTPTransAborts

This count shall be pegged when an SCTP Abort chunk is transmitted.

Data Source

Call Server

Source Field

VS.SCTPTransAborts

Source Section

Per SS7 Service Member

SecHLRQuery

FPG Secondary HLR Query

Data Source

Call Server

Source Field

VS.SecHLRQuery

Source Section

Packet Gateway ANSI-41 Call Delivery

SecHLRQueryFailure

FPG Secondary HLR Query Failure

Data Source

Call Server

Source Field

VS.SecHLRQueryFailure

Source Section

Packet Gateway ANSI-41 Call Delivery

SecondAuthCiphFailT3260Exp_GSM

Pegged based on the UTRAN 3GMSC communication timer T3260 expiring for GSM

Data Source

Call Server

Source Field

VS.SecondAuthCiphFailT3260Exp (with TechnologyType=GSM)

Source Section

Authentication per Technology Type

SecondAuthCiphFailT3260Exp_UMTS

Pegged based on the UTRAN 3GMSC communication timer T3260 expiring for UMTS.

Data Source

Call Server

Source Field

VS.SecondAuthCiphFailT3260Exp (with TechnologyType=UMTS)

Source Section

Authentication per Technology Type

SendRoutInfoAtt

UMTS Send Routing Info Attempts

© Copyright IBM Corp. 1999, 2009. All rights reserved.

Data Source

Call Server

Source Field

VS.SendRoutInfoAtt

Source Section

Miscellaneous Location Update

SendRoutInfoAttSucc

UMTS Completed Send Routing Info Attempts

Data Source

Call Server

Source Field

VS.SendRoutInfoAttSucc

Source Section

Miscellaneous Location Update

SIP100TryingRcvd

Pegged for each SIP 100 Trying received.

Data Source

Call Server

Source Field

VS.SIP100TryingRcvd

Source Section

SIP Msgs

SIP100TryingSent

Pegged for each SIP 100 Trying sent.

Data Source

Call Server

Source Field

VS.SIP100TryingSent

Source Section

SIP Msgs

SIP1XXRcvd

Pegged for each SIP 1XX received, excluding 100 Trying.

Data Source

Call Server

Source Field

VS.SIP1XXRcvd

Source Section

SIP Msgs

SIP1XXRecv

Number of messages received for status code response classes 1xx.

Data Source

Call Server

Source Field

VS.SIP1XXRecv

Source Section

SIP

SIP1XXSent

Pegged for each SIP 1XX sent, excluding 100 Trying.

Data Source

Call Server

Source Field

VS.SIP1XXSent

© Copyright IBM Corp. 1999, 2009. All rights reserved.

Source Section

SIP Msgs

SIP2XXRcvd

Pegged for each SIP 2XX response received. This includes internal responses generated on behalf of the far end.

Data Source

Call Server

Source Field

VS.SIP2XXRcvd

Source Section

SIP Msgs

SIP2XXRecv

Number of messages received for status code response classes 2xx.

Data Source

Call Server

Source Field

VS.SIP2XXRecv

Source Section

SIP

SIP2XXSent

Pegged for each SIP 2XX response sent.

Data Source

Call Server

Source Field

VS.SIP2XXSent

Source Section

SIP Msgs

SIP3XXRcvd

Pegged for each SIP 3XX response received. This includes internal responses generated on behalf of the far end.

Data Source

Call Server

Source Field

VS.SIP3XXRcvd

Source Section

SIP Msgs

SIP3XXRcvdOnDN

Number of messages received for status code response classes 3xx where the call will be redirected based on dial number (DN).

Data Source

Call Server

Source Field

VS.SIP3XXRcvdOnDN

Source Section

SIP

SIP3XXRcvdOnIP

Number of messages received for status code response classes 3xx where the call will be redirected based on IP address.

Data Source

Call Server

Source Field

VS.SIP3XXRcvdOnIP

© Copyright IBM Corp. 1999, 2009. All rights reserved.

Source Section

SIP

SIP3XXSent

Pegged for each SIP 3XX response sent.

Data Source

Call Server

Source Field

VS.SIP3XXSent

Source Section

SIP Msgs

SIP4XXRcvd

Pegged for each SIP 4XX response received. Since forking may occur, this count is responses sent, not responses delivered to application. This includes internal responses generated on behalf of the far end.

Data Source

Call Server

Source Field

VS.SIP4XXRcvd

Source Section

SIP Msgs

SIP4XXSent

Pegged for each SIP 4XX response sent. Since forking may occur, this count is responses sent, not responses delivered to application.

Data Source

Call Server

Source Field

VS.SIP4XXSent

Source Section

SIP Msgs

SIP5XXRcvd

Pegged for each SIP 5XX response received. Since forking may occur, this count is responses sent, not responses delivered to application. This includes internal responses generated on behalf of the far end.

Data Source

Call Server

Source Field

VS.SIP5XXRcvd

Source Section

SIP Msgs

SIP5XXSent

Pegged for each SIP 5XX response sent. Since forking may occur, this count is responses sent, not responses delivered to application.

Data Source

Call Server

Source Field

VS.SIP5XXSent

Source Section

SIP Msgs

SIP6XXRcvd

Pegged for each SIP 6XX response received. Since forking may occur, this count is responses sent, not responses delivered to application. This includes internal responses generated on behalf of the far end.

Data Source

Call Server

© Copyright IBM Corp. 1999, 2009. All rights reserved.

Source Field

VS.SIP6XXRcvd

Source Section

SIP Msgs

SIP6XXSent

Pegged for each SIP 6XX response sent. Since forking may occur, this count is responses sent, not responses delivered to application.

Data Source

Call Server

Source Field

VS.SIP6XXSent

Source Section

SIP Msgs

SIPAckRcvd

Pegged for each SIP ACK received. It includes retransmissions.

Data Source

Call Server

Source Field

VS.SIPAckRcvd

Source Section

SIP Msgs

SIPAckSent

Pegged for each SIP ACK sent. It includes retransmissions.

Data Source

Call Server

Source Field

VS.SIPAckSent

Source Section

SIP Msgs

SIPByeMsgRecv

Number of BYE messages received.

Data Source

Call Server

Source Field

VS.SIPByeMsgRecv

Source Section

SIP

SIPByeMsgSent

Number of BYE messages sent.

Data Source

Call Server

Source Field

VS.SIPByeMsgSent

Source Section

SIP

SIPByeOkMsgRecv

Number of 200 OK (BYE) messages received.

Data Source

Call Server

Source Field

VS.SIPByeOkMsgRecv

© Copyright IBM Corp. 1999, 2009. All rights reserved.

Source Section

SIP

SIPByeOkMsgSent

Number of 200 OK (BYE) messages sent.

Data Source

Call Server

Source Field

VS.SIPByeOkMsgSent

Source Section

SIP

SIPByeRcvd

Pegged for each SIP BYE received. It includes retransmissions.

Data Source

Call Server

Source Field

VS.SIPByeRcvd

Source Section

SIP Msgs

SIPByeSent

Pegged for each SIP BYE sent. It includes retransmissions.

Data Source

Call Server

Source Field

VS.SIPByeSent

Source Section

SIP Msgs

SIPCallFailAppTO

Pegged for SIP send message application timeouts which result in a call failure.

Data Source

Call Server

Source Field

VS.SIPCallFailAppTO

Source Section

SIP Msgs

SIPCancelMsgRecv

Number of CANCEL messages received.

Data Source

Call Server

Source Field

VS.SIPCancelMsgRecv

Source Section

SIP

SIPCancelMsgSent

Number of CANCEL messages sent.

Data Source

Call Server

Source Field

VS.SIPCancelMsgSent

Source Section

SIP

SIPCancelRcvd

Pegged for each SIP CANCEL received. It includes retransmissions.

© Copyright IBM Corp. 1999, 2009. All rights reserved.

Data Source

Call Server

Source Field

VS.SIPCancelRcvd

Source Section

SIP Msgs

SIPCancelSent

Pegged for each SIP CANCEL sent. It includes retransmissions.

Data Source

Call Server

Source Field

VS.SIPCancelSent

Source Section

SIP Msgs

SIPClientErrorRecv

Number of messages received for status code response classes 4xx. (Client Error).

Data Source

Call Server

Source Field

VS.SIPClientErrorRecv

Source Section

SIP

SIPClientErrorSent

Number of responses sent for status code response classes 4xx. (Client Error).

Data Source

Call Server

Source Field

VS.SIPClientErrorSent

Source Section

SIP

SIPDSInCallAtt

SIP Device Server Incoming Call Attempts

Data Source

Call Server

Source Field

VS.SIPDSInCallAtt

Source Section

SIP

SIPDSInCallSetupSucc

SIP Device Server Incoming Call Setup Success

Data Source

Call Server

Source Field

VS.SIPDSInCallSetupSucc

Source Section

SIP

SIPDSOutCallAtt

SIP Device Server Outgoing Call Attempts

Data Source

Call Server

Source Field

VS.SIPDSOutCallAtt

© Copyright IBM Corp. 1999, 2009. All rights reserved.

Source Section

SIP

SIPDSOutCallSetupSucc

SIP Device Server Outgoing Call Setup Success

Data Source

Call Server

Source Field

VS.SIPDSOutCallSetupSucc

Source Section

SIP

SIPGlobalFailureRecv

Number of messages received for status code response classes 6xx. (Global Failure).

Data Source

Call Server

Source Field

VS.SIPGlobalFailureRecv

Source Section

SIP

SIPGlobalFailureSent

Number of responses sent for status code response classes 6xx. (Global Failure).

Data Source

Call Server

Source Field

VS.SIPGlobalFailureSent

Source Section

SIP

SIPIncMsgDiscarded

Incoming SIP messages Discarded Invalid. The number of incoming messages that were discarded due to invalid content which could not be parsed.

Data Source

Call Server

Source Field

VS.SIPIncMsgDiscarded

Source Section

SIP

SIPInDialogReqDenSvcOvrld

The count "SIP In-Dialog request denied due to Service Overload" shall be pegged when a SIP request within an existing session is rejected due to a Service Overload condition.

Data Source

Call Server

Source Field

VS.SIPInDialogReqDenSvcOvrld

Source Section

SIP

SIPInfoMsgRecv

Number of INFO messages received.

Data Source

Call Server

Source Field

VS.SIPInfoMsgRecv

Source Section

SIP

© Copyright IBM Corp. 1999, 2009. All rights reserved.

SIPInfoMsgSent

Number of INFO messages sent.

Data Source

Call Server

Source Field

VS.SIPInfoMsgSent

Source Section

SIP

SIPInfoRcvd

Pegged for each SIP INFO received. It includes retransmissions.

Data Source

Call Server

Source Field

VS.SIPInfoRcvd

Source Section

SIP Msgs

SIPInfoSent

Pegged for each SIP INFO sent. It includes retransmissions.

Data Source

Call Server

Source Field

VS.SIPInfoSent

Source Section

SIP Msgs

SIPInstRegSub

Instantaneous Registered Subscriber Count This count provides the instantaneous number of subscribers/endpoints that are currently registered with the device server.

Data Source

Call Server

Source Field

VS.SIPInstRegSub

Source Section

SIP

SIPInviteMsgRecv

Number of INVITE messages received.

Data Source

Call Server

Source Field

VS.SIPInviteMsgRecv

Source Section

SIP

SIPInviteMsgSent

Number of INVITE messages sent.

Data Source

Call Server

Source Field

VS.SIPInviteMsgSent

Source Section

SIP

© Copyright IBM Corp. 1999, 2009. All rights reserved.

SIPInviteRcvd

Pegged for each SIP INVITE received. It includes retransmissions and forking as well as reINVITE messages.

Data Source

Call Server

Source Field

VS.SIPInviteRcvd

Source Section

SIP Msgs

SIPInviteSent

Pegged for each SIP INVITE sent. It includes retransmissions and forking as well as reINVITE messages.

Data Source

Call Server

Source Field

VS.SIPInviteSent

Source Section

SIP Msgs

SIPInviteSentUDP

Pegged for each SIP INVITE request sent over UDP, including the reINVITE request. It shall include request retransmissions and forking.

Data Source

Call Server

Source Field

VS.SIPInviteSentUDP

Source Section

SIP Msgs

SIPInvOkMsgRecv

Number of 200 OK (INVITE) messages received.

Data Source

Call Server

Source Field

VS.SIPInvOkMsgRecv

Source Section

SIP

SIPInvOkMsgSent

Number of 200 OK (INVITE) messages sent.

Data Source

Call Server

Source Field

VS.SIPInvOkMsgSent

Source Section

SIP

SIPNewSessReqDenSvcOvrld

The count "SIP New Session request denied due to Service Overload" shall be pegged when a new SIP Session setup request (i.e. INVITE, SUBSCRIBE, or REFER message w/ no tag in the "To" field) is rejected due to a Service Overload condition.

Data Source

Call Server

Source Field

VS.SIPNewSessReqDenSvcOvrld

Source Section

SIP

© Copyright IBM Corp. 1999, 2009. All rights reserved.

SIPOptionsRcvd

Pegged for each SIP OPTIONS received. It includes retransmissions.

Data Source

Call Server

Source Field

VS.SIPOptionsRcvd

Source Section

SIP Msgs

SIPOptionsSent

Pegged for each SIP OPTIONS sent. It includes retransmissions.

Data Source

Call Server

Source Field

VS.SIPOptionsSent

Source Section

SIP Msgs

SIPOutAttemptFailed

Outgoing Attempts Failed by SIP Problems. The number of outgoing attempts that failed because of no response or timeout from final call attempt.

Data Source

Call Server

Source Field

VS.SIPOutAttemptFailed

Source Section

SIP

SIPPrackMsgRecv

Pegged for each of SIP PRACK message received.

Data Source

Call Server

Source Field

VS.SIPPrackMsgRecv

Source Section

SIP Msgs

SIPPrackMsgSent

Pegged for each SIP PRACK Message sent.

Data Source

Call Server

Source Field

VS.SIPPrackMsgSent

Source Section

SIP Msgs

SIPPrackRcvd

Pegged for each SIP PRACK received. It includes retransmissions.

Data Source

Call Server

Source Field

VS.SIPPrackRcvd

Source Section

SIP Msgs

SIPPrackSent

Pegged for each SIP PRACK sent. It includes retransmissions.

© Copyright IBM Corp. 1999, 2009. All rights reserved.

Data Source

Call Server

Source Field

VS.SIPPrackSent

Source Section

SIP Msgs

SIPProtTimeOut

Number of SIP protocol timeouts. IDR: Inter LSSs REGISTER timeout will not be counted as protocol timeout.

Data Source

Call Server

Source Field

VS.SIPProtTimeOut

Source Section

SIP

SIPRcvdMsgsDiscard

Pegged for each SIP message received from network discarded by SIP stack unexpectedly.

Data Source

Call Server

Source Field

VS.SIPRcvdMsgsDiscard

Source Section

SIP Msgs

SIPRcvdSCTP

Pegged for each SIP message received using SCTP, including all requests and responses on transport.

Data Source

Call Server

Source Field

VS.SIPRcvdSCTP

Source Section

SIP Msgs

SIPRcvdTCP

Pegged for each SIP message received using TCP, including all requests and responses on transport.

Data Source

Call Server

Source Field

VS.SIPRcvdTCP

Source Section

SIP Msgs

SIPRcvdUDP

Pegged for each SIP message received using UDP, including all requests and responses on transport.

Data Source

Call Server

Source Field

VS.SIPRcvdUDP

Source Section

SIP Msgs

SIPRedirectionRecv

Number of messages received for status code response classes 3xx. (Redirection).

© Copyright IBM Corp. 1999, 2009. All rights reserved.

Data Source

Call Server

Source Field

VS.SIPRedirectionRecv

Source Section

SIP

SIPRegisterReqRecv

Number of REGISTER requests received from subscribers.

Data Source

Call Server

Source Field

VS.SIPRegisterReqRecv

Source Section

SIP

SIPRegisterSucc

Number of successful REGISTER responses

Data Source

Call Server

Source Field

VS.SIPRegisterSucc

Source Section

SIP

SIPRingMsgRecv

Number of 180 RINGING messages received.

Data Source

Call Server

Source Field

VS.SIPRingMsgRecv

Source Section

SIP

SIPRingMsgSent

Number of 180 RINGING requests sent.

Data Source

Call Server

Source Field

VS.SIPRingMsgSent

Source Section

SIP

SIPSendAppRerouteAtt

Pegged for each SIP send reroute attempt when SIP I receives a failure response, it will find the alternative far destination and send the INVITE to that address.

Data Source

Call Server

Source Field

VS.SIPSendAppRerouteAtt

Source Section

SIP Msgs

SIPSendAppRerouteSucc

Pegged for all SIP send application reroute success cases.

Data Source

Call Server

© Copyright IBM Corp. 1999, 2009. All rights reserved.

Source Field

VS.SIPSendAppRerouteSucc

Source Section

SIP Msgs

SIPSendMsgsDiscard

Pegged for each SIP send message received from TU discarded by SIP stack unexpectedly.

Data Source

Call Server

Source Field

VS.SIPSendMsgsDiscard

Source Section

SIP Msgs

SIPSentSCTP

Pegged for each SIP message sent using SCTP, including all requests and responses on transport.

Data Source

Call Server

Source Field

VS.SIPSentSCTP

Source Section

SIP Msgs

SIPSentTCP

Pegged for each SIP message sent using TCP, including all requests and responses on transport.

Data Source

Call Server

Source Field

VS.SIPSentTCP

Source Section

SIP Msgs

SIPSentUDP

Pegged for each SIP message sent using UDP, including all requests and responses on transport.

Data Source

Call Server

Source Field

VS.SIPSentUDP

Source Section

SIP Msgs

SIPServerErrorRecv

Number of messages received for status code response classes 5xx (Server Error).

Data Source

Call Server

Source Field

VS.SIPServerErrorRecv

Source Section

SIP

SIPServerErrorSent

Number of responses sent for status code response classes 5xx (Server Error).

Data Source

Call Server

Source Field

VS.SIPServerErrorSent

© Copyright IBM Corp. 1999, 2009. All rights reserved.

Source Section

SIP

SIPSessInviteReq

SIP Device Server Session Requests

Data Source

Call Server

Source Field

VS.SIPSessInviteReq

Source Section

SIP

SIPSessInviteReqSucc

SIP Device Server Session Requests Successfully Completed

Data Source

Call Server

Source Field

VS.SIPSessInviteReqSucc

Source Section

SIP

SIPSessProgRecv

Number of 183 SESSION PROGRESS messages received.

Data Source

Call Server

Source Field

VS.SIPSessProgRecv

Source Section

SIP

SIPSessProgSent

Number of 183 SESSION PROGRESS messages sent.

Data Source

Call Server

Source Field

VS.SIPSessProgSent

Source Section

SIP

SIPUpdateMsgRecv

Pegged for each SIP UPDATE Message Received.

Data Source

Call Server

Source Field

VS.SIPUpdateMsgRecv

Source Section

SIP Msgs

SIPUpdateMsgSent

Pegged for each SIP UPDATE Message Sent.

Data Source

Call Server

Source Field

VS.SIPUpdateMsgSent

Source Section

SIP Msgs

SIPUpdateRcvd

Pegged for each SIP UPDATE received. It includes retransmissions.

© Copyright IBM Corp. 1999, 2009. All rights reserved.

Data Source

Call Server

Source Field

VS.SIPUpdateRcvd

Source Section

SIP Msgs

SIPUpdateSent

Pegged for each SIP UPDATE sent. It includes retransmissions.

Data Source

Call Server

Source Field

VS.SIPUpdateSent

Source Section

SIP Msgs

snmpCountsCollected

Represents the number of SNMP PM counts collected.

Data Source

Call Server

Source Field

VS.snmpCountsCollected

Source Section

MI Profiling

SS7DSInCallAtt

SS7 Device Server Incoming Call Attempts

Data Source

Call Server

Source Field

VS.SS7DSInCallAtt

Source Section

SS7 Call Processing

SS7DSInCallSetupSucc

SS7 Device Server Incoming Call Setup Successful

Data Source

Call Server

Source Field

VS.SS7DSInCallSetupSucc

Source Section

SS7 Call Processing

SS7DSOutCallAtt

SS7 Device Server Outgoing Call Attempts

Data Source

Call Server

Source Field

VS.SS7DSOutCallAtt

Source Section

SS7 Call Processing

SS7DSOutCallSetupSucc

SS7 Device Server Outgoing Call Setup Success

Data Source

Call Server

Source Field

VS.SS7DSOutCallSetupSucc

© Copyright IBM Corp. 1999, 2009. All rights reserved.

Source Section

SS7 Call Processing

SS7MSUOctetReceived

The number of MSU octets received by the Device Server on incoming links from the network. Replacement counter:SIFandSIOoctetsReceived

Data Source

Call Server

Source Field

VS.SS7MSUOctetReceived

Source Section

Capacity

SS7MSUOctetReTransmitted

The number of MSU octets retransmitted by the Device Server over outgoing links to the network. Replacement counter:SIFandSIOoctetsTransmitted

Data Source

Call Server

Source Field

VS.SS7MSUOctetReTransmitted

Source Section

Capacity

SS7MSUOctetTransmitted

The number of MSU octets transmitted (including those retransmitted) by the Device Server over outgoing links to the network.

Data Source

Call Server

Source Field

VS.SS7MSUOctetTransmitted

Source Section

Capacity

SS7MSUReceived

The number of MSUs received by the Device Server on incoming links from the network.

Data Source

Call Server

Source Field

VS.SS7MSUReceived

Source Section

Capacity

SS7MSUTransmitted

The number of MSUs transmitted (including those retransmitted) by the Device Server over outgoing links to the network.

Data Source

Call Server

Source Field

VS.SS7MSUTransmitted

Source Section

Capacity

SS7OutgoingAttemptFailed

Outgoing Attempts Failed by CCS Failures

Data Source

Call Server

Source Field

VS.SS7OutgoingAttemptFailed

© Copyright IBM Corp. 1999, 2009. All rights reserved.

Source Section

SS7 Signaling

SUBDBRegQueryAtt

No vendor documentation could be found for this metric.

Data Source

Call Server

Source Field

VS.SUBDBRegQueryAtt

Source Section

Per SUBDB Service Member

SUBDBRegQueryAttSucc

No vendor documentation could be found for this metric.

Data Source

Call Server

Source Field

VS.SUBDBRegQueryAttSucc

Source Section

Per SUBDB Service Member

SUBDBSubQueryAtt

No vendor documentation could be found for this metric.

Data Source

Call Server

Source Field

VS.SUBDBSubQueryAtt

Source Section

Per SUBDB Service Member

SUBDBSubQueryAttSucc

No vendor documentation could be found for this metric.

Data Source

Call Server

Source Field

VS.SUBDBSubQueryAttSucc

Source Section

Per SUBDB Service Member

subInfoBlkdOLC

No vendor documentation could be found for this metric.

Data Source

Call Server

Source Field

VS.subInfoBlkdOLC

Source Section

Overload Control

Succ_GSM_UMTS_HHO

This count is pegged for each successful GSM-to-UMTS hard handover. It is pegged at the controlling MSC for both intra and inter-MSC handovers upon receipt of the RELOCATION COMPLETE message for intra-MSC handovers or upon receipt of the MAP SendEndSignalRequest for inter-MSC handovers.

Data Source

Call Server

Source Field

VS.Succ_GSM_UMTS_HHO

Source Section

Handover

© Copyright IBM Corp. 1999, 2009. All rights reserved.

Succ_UMTS_GSM_HHO

This count is pegged for each successful UMTS-to-GSM hard handover attempt. It is pegged at the controlling MSC for both intra and inter-MSC handovers upon receipt of the HANDOVER COMPLETE message for intra-MSC handovers or upon receipt of the MAP SendEndSignalRequest for inter-MSC handovers.

Data Source

Call Server

Source Field

VS.Succ_UMTS_GSM_HHO

Source Section

Handover

succAuthProcsInVLR

Successful authentication procedures in the VLR/MSC

Data Source

Call Server

Source Field

succAuthProcsInVLR

Source Section

Authentication

succCallWaitingAnswered

Successful call waiting calls answered

Data Source

Call Server

Source Field

VS.succCallWaitingAnswered

Source Section

Call Waiting and Call Hold

succCallWaitingInvocation

Successful automatic invocation of call waiting on a connection where the traffic channel is not available for the incoming call and the UE is engaged in an active or a held call

Data Source

Call Server

Source Field

VS.succCallWaitingInvocation

Source Section

Call Waiting and Call Hold

succCFBNDUBinVMSC

Successful automatic invocations of call forwarding on network determined subscriber busy (NDUB)

Data Source

Call Server

Source Field

VS.succCFBNDUBinVMSC

Source Section

Call forwarding

succCFBUDUBinVMSC

Successful automatic invocations of call forwarding on User determined subscriber busy (UDUB)

Data Source

Call Server

Source Field

VS.succCFBUDUBinVMSC

Source Section

Call forwarding

© Copyright IBM Corp. 1999, 2009. All rights reserved.

succCFNRcinGMSC

This count shall be pegged when the transmission of the new Setup message in the forward direction towards the forwarded-to user after receiving a network setup message to a served HOME PLMN UE provisioned with call be forwarded on Mobile Subscriber Not Reachable (CFNRc).

Data Source

Call Server

Source Field

VS.succCFNRcinGMSC

Source Section

Per CS Service Member

succCFNRcinVMSC

Successful automatic invocations of call forwarding on mobile subscriber not reachable

Data Source

Call Server

Source Field

VS.succCFNRcinVMSC

Source Section

Call forwarding

succCFNRyinVMSC

Successful automatic invocations of call forwarding on No Reply from the mobile subscriber

Data Source

Call Server

Source Field

VS.succCFNRyinVMSC

Source Section

Call forwarding

succCFUinGMSC

Successful automatic invocations of call forwarding unconditional

Data Source

Call Server

Source Field

VS.succCFUinGMSC

Source Section

Call forwarding

succCipheringModeControlProcs_GSM

Successful ciphering mode control procedures (GSM Technology Type)

Data Source

Call Server

Source Field

succCipheringModeControlProcs

Source Section

Security Mode (GSM)

succCipheringModeControlProcs_UMTS

Successful ciphering mode control procedures (UMTS Technology Type)

Data Source

Call Server

Source Field

succCipheringModeControlProcs

Source Section

Security Mode (UMTS)

succConfCircuitResp

Conference circuit successfully allocated

© Copyright IBM Corp. 1999, 2009. All rights reserved.

Data Source

Call Server

Source Field

VS.succConfCircuitResp

Source Section

3-way Multi-Party

succDirectedRetryHDOs_GSM

GSM Successful Directed Retry Handovers

Data Source

Call Server

Source Field

VS.succDirectedRetryHDOs

Source Section

Hand Over (GSM)

succDirectedRetryHDOs_UMTS

UMTS Successful Directed Retry Handovers

Data Source

Call Server

Source Field

VS.succDirectedRetryHDOs

Source Section

Hand Over (UMTS)

succIdentificationReqToPVLRs

Successful Identification requests to PVLRs

Data Source

Call Server

Source Field

succIdentificationReqToPVLRs

Source Section

Authentication

succIdReqToPVLRsNoVectors

Successful Send IDs Containing No Authentication Vectors

Data Source

Call Server

Source Field

VS.succIdReqToPVLRsNoVectors

Source Section

Location Update

succInsertSubDataService

Successful insert subscriber data service

Data Source

Call Server

Source Field

succInsertSubDataService

Source Section

Per VLR Service Member

succInterrogationOfHLRsCFObtained

Successful interrogations of HLR (CF obtained)

Data Source

Call Server

Source Field

succInterrogationOfHLRsCFObtained

© Copyright IBM Corp. 1999, 2009. All rights reserved.

Source Section

Interrogation of HLR for Routing

succInterrogationOfHLRsMSRNObtained

Successful interrogations of HLR (MSRN obtained)

Data Source

Call Server

Source Field

succInterrogationOfHLRsMSRNObtained

Source Section

Interrogation of HLR for Routing

succInterVLRLocationUpdates_GSM

Successful inter-VLR Location Updates (GSM Technology Type)

Data Source

Call Server

Source Field

succInterVLRLocationUpdates

Source Section

Location Update (GSM)

succInterVLRLocationUpdates_UMTS

Successful inter-VLR Location Updates (UMTS Technology Type)

Data Source

Call Server

Source Field

succInterVLRLocationUpdates

Source Section

Location Update (UMTS)

succIntraVLRLocationUpdates_GSM

Successful intra-VLR Location Updates (GSM Technology Type)

Data Source

Call Server

Source Field

succIntraVLRLocationUpdates

Source Section

Location Update (GSM)

succIntraVLRLocationUpdates_UMTS

Successful intra-VLR Location Updates (UMTS Technology Type)

Data Source

Call Server

Source Field

succIntraVLRLocationUpdates

Source Section

Location Update (UMTS)

succIntraVLRPerioLocationUpdates_GSM

Successful intra-VLR Location Updates (timebased periodical location update) (GSM Technology Type)

Data Source

Call Server

Source Field

VS.succIntraVLRPerioLocationUpdates

Source Section

Location Update (GSM)

© Copyright IBM Corp. 1999, 2009. All rights reserved.

succIntraVLRPerioLocationUpdates_UMTS

Successful intra-VLR Location Updates (timebased periodical location update) (UMTS Technology Type)

Data Source

Call Server

Source Field

VS.succIntraVLRPerioLocationUpdates

Source Section

Location Update (UMTS)

succL2Lcalls

This count is pegged for each successful land originated to land terminated call attempt. It is pegged on receipt of the CUT-THRU message from the terminating leg of the call indicating the call was sucessfully setup. The call does not have to reach the point of answer for this count to be pegged.

Data Source

Call Server

Source Field

VS.succL2Lcalls

Source Section

Traffic Profiling

succL2Mcalls

This count is pegged for each successful land originated to mobile terminated call attempt. It is pegged It is pegged when the CONNECT ACK message is sent to the terminating mobile. A call to a mobile that's roaming in another MSC will not peg this count. That case will be pegged as a Land-to-Land call attempt since the terminating leg of the call leaves this switch as an outgoing landline call.

Data Source

Call Server

Source Field

VS.succL2Mcalls

Source Section

Traffic Profiling

succLayer3TransportSSMessagesToRNC

No vendor documentation could be found for this metric.

Data Source

Call Server

Source Field

VS.succLayer3TransportSSMessagesToRNC

Source Section

Supplementary Services (SS)

succLCFinGMSC

Successful Late Call Forwarding in GMSC

Data Source

Call Server

Source Field

VS.succLCFinGMSC

Source Section

Late Call Forwarding

succM2Lcalls

This count is pegged for each successful mobile originated to land terminated call attempt. It is pegged on receipt of the CUT-THRU message from the PLMN leg of the call indicating the call was successfully setup. The call does not have to reach the point of answer for this count to be pegged. A call from a mobile that's roaming in another MSC does not peg this count. That case would be pegged as a Land-to-Land call attempt since the A leg of the call enters this switch as an incoming landline call.

Data Source

Call Server

© Copyright IBM Corp. 1999, 2009. All rights reserved.

Source Field

VS.succM2Lcalls

Source Section

Traffic Profiling

succM2Mcalls

This count is pegged for each successful mobile originated to mobile terminated call attempt. It is pegged when the CONNECT ACK message is sent to the terminating mobile. A mobile originated call to a mobile that's roaming to another MSC does not peg this count. That case would be pegged as a Mobile-to-Land call attempt since the terminating leg of the call leaves this MSC as an outgoing landline call.

Data Source

Call Server

Source Field

VS.succM2Mcalls

Source Section

Traffic Profiling

succMobileEmergencyCalls_GSM

Successful Mobile Emergency calls (GSM Technology Type)

Data Source

Call Server

Source Field

succMobileEmergencyCalls

Source Section

Mobile Call Setup (GSM)

succMobileEmergencyCalls_UMTS

Successful Mobile Emergency calls (UMTS Technology Type)

Data Source

Call Server

Source Field

succMobileEmergencyCalls

Source Section

Mobile Call Setup (UMTS)

succMobileOriginatingCalls_GSM

Successful mobile originating calls (GSM Technology Type)

Data Source

Call Server

Source Field

succMobileOriginatingCalls

Source Section

Mobile Call Setup (GSM)

succMobileOriginatingCalls_UMTS

Successful mobile originating calls (UMTS Technology Type)

Data Source

Call Server

Source Field

succMobileOriginatingCalls

Source Section

Mobile Call Setup (UMTS)

succMobileTerminatingCalls_GSM

Successful mobile terminating calls (GSM Technology Type)

Data Source

Call Server

Source Field

succMobileTerminatingCalls

© Copyright IBM Corp. 1999, 2009. All rights reserved.

Source Section

Mobile Call Setup (GSM)

succMobileTerminatingCalls_UMTS

Successful mobile terminating calls (UMTS Technology Type)

Data Source

Call Server

Source Field

succMobileTerminatingCalls

Source Section

Mobile Call Setup (UMTS)

succMOForwardSM_GSM

The number of Mobile Originated SMS Attempts that have been received at the SS7 Device Server (in the SMS Connection Model on the Iu Interface) that have been successfully processed. (GSM TechnologyType)

Data Source

Call Server

Source Field

VS.succMOForwardSM (where TechnologyType=GSM)

Source Section

Per SS7 Service Member, per Technology Type

succMOForwardSM_UMTS

The number of Mobile Originated SMS Attempts that have been received at the SS7 Device Server (in the SMS Connection Model on the Iu Interface) that have been successfully processed. (UMTS TechnologyType)

Data Source

Call Server

Source Field

VS.succMOForwardSM (where TechnologyType=UMTS)

Source Section

Per SS7 Service Member, per Technology Type

succMPTYCalls

Succesful Invocation attempts of multiple party calls

Data Source

Call Server

Source Field

VS.succMPTYCalls

Source Section

3-way Multi-Party

succMSMemoryAvailableNotifications

Successful MS memory available notifications

Data Source

Call Server

Source Field

succMSMemoryAvailableNotifications

Source Section

SMS

succMTForwardSM_GSM

The number of Mobile Terminated SMS Attempts that have been received at the SS7 Device Server (in the SMS Relay Layer Task from the SMS Service Center) that have been successfully processed. (GSM TechnologyType)

Data Source

Call Server

Source Field

VS.succMTForwardSM (Where TechnologyType=UMTS)

© Copyright IBM Corp. 1999, 2009. All rights reserved.

Source Section

Per SS7 Service Member, per Technology Type

succMTForwardSM_UMTS

The number of Mobile Terminated SMS Attempts that have been received at the SS7 Device Server (in the SMS Relay Layer Task from the SMS Service Center) that have been successfully processed. (UMTS TechnologyType)

Data Source

Call Server

Source Field

VS.succMTForwardSM

Source Section

Per SS7 Service Member, per Technology Type

succNumCCCReq

No vendor documentation could be found for this metric.

Data Source

Call Server

Source Field

VS.succNumCCCReq

Source Section

CALEA

succOpForMobileOriginatingPointToPointSMs_GSM

Successful operations for mobile originating point to point SMs (GSM Technology Type)

Data Source

Call Server

Source Field

succOpForMobileOriginatingPointToPointSMs

Source Section

SMS Traffic (GSM)

succOpForMobileOriginatingPointToPointSMs_UMTS

Successful operations for mobile originating point to point SMs (UMTS Technology Type)

Data Source

Call Server

Source Field

succOpForMobileOriginatingPointToPointSMs

Source Section

SMS Traffic (UMTS)

succOpForMobileTerminatingPointToPointSMs_GSM

Successful operations for mobile terminating point to point SMs (GSM Technology Type)

Data Source

Call Server

Source Field

succOpForMobileTerminatingPointToPointSMs

Source Section

SMS Traffic (GSM)

succOpForMobileTerminatingPointToPointSMs_UMTS

Successful operations for mobile terminating point to point SMs (UMTS Technology Type)

Data Source

Call Server

Source Field

succOpForMobileTerminatingPointToPointSMs

Source Section

SMS Traffic (UMTS)

© Copyright IBM Corp. 1999, 2009. All rights reserved.

succORLCFinVMSC

Successful Optimal Routing for Late Call Forwarding in VMSC.

Data Source

Call Server

Source Field

VS.succORLCFinVMSC

Source Section

VLR

succReadyForSM

This count shall record the number of successful replies to MAP Ready for SM attempts sent to the HLR to reset the MNRF when messages are waiting. This count shall be pegged when the MSC receives a successful reply to the MAP "ReadyForSM" message from the HLR to reset the Mobile-Station-Not-Reachable-Flag (MNRF) in the HLR. The MNRF is a Boolean parameter indicating if the address list of Messages-Waiting-Data (MWD) contains one or more entries because an attempt to deliver a short message to an MS has failed with a cause of Absent Subscriber. The MWD list is maintained in the HLR and the MNRF is stored in the VLR and the HLR.

Data Source

Call Server

Source Field

VS.succReadyForSM

Source Section

Per VLR Service Member

succReceivedAuthSetsFromHLR

Successful received Authentication sets from HLR to VLRs

Data Source

Call Server

Source Field

succReceivedAuthSetsFromHLR

Source Section

Authentication

succReqForMSRN

Successful request for MSRN

Data Source

Call Server

Source Field

succReqForMSRN

Source Section

Interrogation of HLR for Routing

succSSRelatedOperationsInHLR

Successful Supplementary Service (SS) related operations at the HLR

Data Source

Call Server

Source Field

succSSRelatedOperationsInHLR

Source Section

Supplementary Services (SS)

succSubsequentMobileOriginatingCalls

No vendor documentation could be found for this metric.

Data Source

Call Server

Source Field

VS.succSubsequentMobileOriginatingCalls

Source Section

Supplementary Services (SS)

© Copyright IBM Corp. 1999, 2009. All rights reserved.

succTestMobileEmergencyCalls

Pegged each time a test emergency call originated at 3G-MSC is successfully setup. Pegged on receipt of the RAB ASSIGNMENT COMPLETE (UMTS) or ASSIGNMENT COMPLETE (GSM) message from the originating MS for the requested test emergency call.

Data Source

Call Server

Source Field

VS.succTestMobileEmergencyCalls

Source Section

E911

succTMSIReallocations_GSM

Successful TMSI re-allocations (GSM Technology Type)

Data Source

Call Server

Source Field

succTMSIReallocations

Source Section

Location Update (GSM)

succTMSIReallocations_UMTS

Successful TMSI re-allocations (UMTS Technology Type)

Data Source

Call Server

Source Field

succTMSIReallocations

Source Section

Location Update (UMTS)

sysHONoverflow

Pegged whenever a HON number cannot be allocated from the default system pool (0).

Data Source

Call Server

Source Field

VS.sysHONoverflow

Source Section

MSRN / HON Pooling

sysMSRNoverflow

Pegged whenever a MSRN number cannot be allocated from the default system pool (0).

Data Source

Call Server

Source Field

VS.sysMSRNoverflow

Source Section

MSRN / HON Pooling

T303TONoRespToSETUPMsg_GSM

Call Failed: No Response to SETUP Message before T303 expires (GSM Technology Type). This counter is pegged based on the UTRAN - 3GMSC communication timer T303 expiring. This count shall be pegged if the network does not receive any response to the SETUP message prior to the expiration of timer T303, then the network initiates clearing procedures towards the calling user with cause No.18 "no user responding" and initiates clearing procedures towards the called mobile station.

Data Source

Call Server

Source Field

VS.T303TONoRespToSETUPMsg

© Copyright IBM Corp. 1999, 2009. All rights reserved.

Source Section

SS7 Call Setup (GSM)

T303TONoRespToSETUPMsg_UMTS

Call Failed: No Response to SETUP Message before T303 expires (UMTS Technology Type). This counter is pegged based on the UTRAN - 3GMSC communication timer T303 expiring. This count shall be pegged if the network does not receive any response to the SETUP message prior to the expiration of timer T303, then the network initiates clearing procedures towards the calling user with cause No.18 "no user responding" and initiates clearing procedures towards the called mobile station.

Data Source

Call Server

Source Field

VS.T303TONoRespToSETUPMsg

Source Section

SS7 Call Setup (UMTS)

T310TONoAlertCnDcAftCCMsg_GSM

Call Failed: T310 Expires After CALL CONFIRM Before ALERTING, CONNECT or DISCONNECT (GSM Technology Type). This counter is pegged based on the UTRAN - 3GMSC communication timer T310 expiring. This count shall be pegged if the network has received a CALL CONFIRMED message, but does not receive an ALERTING, CONNECT or DISCONNECT message prior to the expiration of timer T310, then the network initiates clearing procedures towards the calling user with cause No. 18 "no user responding" and initiates clearing procedures towards the called MS

Data Source

Call Server

Source Field

VS.T310TONoAlertConDisconAfterCCMsg

Source Section

SS7 Call Setup (GSM)

T310TONoAlertCnDcAftCCMsg_UMTS

Call Failed: T310 Expires After CALL CONFIRM Before ALERTING, CONNECT or DISCONNECT (UMTS Technology Type). This counter is pegged based on the UTRAN - 3GMSC communication timer T310 expiring. This count shall be pegged if the network has received a CALL CONFIRMED message, but does not receive an ALERTING, CONNECT or DISCONNECT message prior to the expiration of timer T310, then the network initiates clearing procedures towards the calling user with cause No. 18 "no user responding" and initiates clearing procedures towards the called MS

Data Source

Call Server

Source Field

VS.T310TONoAlertConDisconAfterCCMsg

Source Section

SS7 Call Setup (UMTS)

TAnswerINVOKESent

This count shall be pegged when a TAnswer Invoke message is sent by the Feature Server to the SCP to indicate the call has been answered.

Data Source

Call Server

Source Field

VS.TAnswerINVOKESent

Source Section

Packet Gateway ANSI-41 Call Delivery

TDisconnectINVOKESent

A TDisconnect Invoke message is sent by the Feature Server to the SCP to indicate the call has been disconnected.

Data Source

Call Server

Source Field

VS.TDisconnectINVOKESent

© Copyright IBM Corp. 1999, 2009. All rights reserved.

Source Section

Packet Gateway ANSI-41 Call Delivery

TDisconnectINVREJRcvd

The Feature Server receives a Reject message from the SCP in response to an TDisconnect Invoke message.

Data Source

Call Server

Source Field

VS.TDisconnectINVREJRcvd

Source Section

Packet Gateway ANSI-41 Call Delivery

TDisconnectINVRETError

The Feature Server receives a Return Error message from the SCP in response to a TDisconnect Invoke message.

Data Source

Call Server

Source Field

VS.TDisconnectINVRETError

Source Section

Packet Gateway ANSI-41 Call Delivery

TDisconnectMsgRouteFail

The Feature Server receives a Route Failure from the SS7 Device Server in response to an TDisconnect Invoke message.

Data Source

Call Server

Source Field

VS.TDisconnectMsgRouteFail

Source Section

Packet Gateway ANSI-41 Call Delivery

TDisconnectMsgTO

The Feature Server times-out waiting for a response from the SCP after sending a TDisconnect message.

Data Source

Call Server

Source Field

VS.TDisconnectMsgTO

Source Section

Packet Gateway ANSI-41 Call Delivery

termLCSFailAbsentSub

Mobile Terminated Location Requests Failed - Absent Subscriber

Data Source

Call Server

Source Field

VS.termLCSFailAbsentSub

Source Section

Mobile Terminated Location Services

termLCSFailPosMethod

Mobile Terminated Location Requests Failed - Position Method Failure

Data Source

Call Server

Source Field

VS.termLCSFailPosMethod

© Copyright IBM Corp. 1999, 2009. All rights reserved.

Source Section

Mobile Terminated Location Services

termLCSFailUnauthClient

Mobile Terminated Location Requests Failed - Unauthorized LCS Client

Data Source

Call Server

Source Field

VS.termLCSFailUnauthClient

Source Section

Mobile Terminated Location Services

termLCSLocReqAtts

Mobile Terminated Location Request Attempts

Data Source

Call Server

Source Field

VS.termLCSLocReqAtts

Source Section

Mobile Terminated Location Services

termLCSLocReqSucc

Mobile Terminated Location Requests Succeeded

Data Source

Call Server

Source Field

VS.termLCSLocReqSucc

Source Section

Mobile Terminated Location Services

throttleAuthentication

Authentication Attempts Throttled by Overload Control

Data Source

Call Server

Source Field

VS.throttleAuthentication

Source Section

Overload Control

throttledLocRegForSS7Cong

Pegged when a Location Registration is ignored because SS7 signaling links are overloaded as a result of mass Location Registration is attempted.

Data Source

Call Server

Source Field

VS.throttledLocRegForSS7Cong

Source Section

Throttling

throttledRestoreDataForSS7Cong

Pegged when a Provide Roaming Number request is rejected because SS7 signaling links are overloaded as a result of mass restore data is attempted.

Data Source

Call Server

Source Field

VS.throttledRestoreDataForSS7Cong

Source Section

Throttling

© Copyright IBM Corp. 1999, 2009. All rights reserved.

throttleIMEICheck

IMEI Checks Throttled by Overload Control

Data Source

Call Server

Source Field

VS.throttleIMEICheck

Source Section

Overload Control

throttleLocalCongestIncCalls

Incoming Call Attempts Throttled by Overload Control

Data Source

Call Server

Source Field

VS.throttleLocalCongestIncCalls

Source Section

Overload Control

throttleLocalCongestOutgCalls

Outgoing call attempts throttled as a result of local overload control.

Data Source

Call Server

Source Field

VS.throttleLocalCongestOutgCalls

Source Section

Throttling

throttleLocationUpdate

Location Update Attempts Throttled by Overload Control

Data Source

Call Server

Source Field

VS.throttleLocationUpdate

Source Section

Overload Control

throttleMobileOrigCalls

Mobile Originations Throttled by Overload Control

Data Source

Call Server

Source Field

VS.throttleMobileOrigCalls

Source Section

Overload Control

throttleMobileTermCalls

Mobile terminated call attempts throttled as a result of local overload control.

Data Source

Call Server

Source Field

VS.throttleMobileTermCalls

Source Section

Throttling

throttlePaging

Throttled Paging Attempts

Data Source

Call Server

© Copyright IBM Corp. 1999, 2009. All rights reserved.

Source Field

VS.throttlePaging

Source Section

Throttling

throttleRemoteDpcOutgCalls

Outgoing PSTN Calls Throttled, Remote Switch Congestion

Data Source

Call Server

Source Field

VS.throttleRemoteDpcOutgCalls

Source Section

Overload Control

throttleRemoteNetworkOutgCalls

No vendor documentation could be found for this metric.

Data Source

Call Server

Source Field

VS.throttleRemoteNetworkOutgCalls

Source Section

Overload Control

throttleShortMessages

Short Messages Throttled by Overload Control

Data Source

Call Server

Source Field

VS.throttleShortMessages

Source Section

Overload Control

throttleSSActivateDeactivate

Supplementary Services Activates and Deactivates Throttled by Overload Control

Data Source

Call Server

Source Field

VS.throttleSSActivateDeactivate

Source Section

Overload Control

timeoutConfReq

Timeout on Conference Circuit response from LMR

Data Source

Call Server

Source Field

VS.timeoutConfReq

Source Section

3-way Multi-Party

totalBAOCalls

Number of Barring of all outgoing calls (BAOC) Calls.

Data Source

Call Server

Source Field

VS.totalBAOCalls

Source Section

Call Barring

© Copyright IBM Corp. 1999, 2009. All rights reserved.

totalBOICalls

Number of Barring of outgoing international calls (BOIC) Calls.

Data Source

Call Server

Source Field

VS.totalBOICalls

Source Section

Call Barring

totalBOICexHCalls

Number of Barring of outgoing international calls (BOIC) except those directed to the Home PLMN country (BOIC-exHC)

Data Source

Call Server

Source Field

VS.totalBOICexHCalls

Source Section

Call Barring

totalCLIPCalls

Total number of Calling Line ID presented (CLIP)

Data Source

Call Server

Source Field

VS.totalCLIPCalls

Source Section

Call Waiting and Call Hold

totalCLIRCalls

Total Calling Line ID Restriction (CLIR) by originating party

Data Source

Call Server

Source Field

VS.totalCLIRCalls

Source Section

Call Waiting and Call Hold

totalIODBBOIZexHCBOIZCalls

Number of total Barring of outgoing inter-zonal calls except those directed to home PLMN country and barring of outgoing inter-zonal calls - (operator determined)

Data Source

Call Server

Source Field

VS.totalIODBBOIZexHCBOIZCalls

Source Section

Call Barring

totalODBBAOCalls

Operator Determined outgoing Barring - Barring all Outgoing Calls (ODB-BAOC)

Data Source

Call Server

Source Field

VS.totalODBBAOCalls

Source Section

Call Barring

© Copyright IBM Corp. 1999, 2009. All rights reserved.

totalODBBOICalls

Number of total Barring of outgoing international calls (BOIC) - operator determined

Data Source

Call Server

Source Field

VS.totalODBBOICalls

Source Section

Call Barring

totalODBBOICexHCalls

Number of total Barring of outgoing international calls except those directed to Home PLMN country (BOIC-exHC) - operator determined

Data Source

Call Server

Source Field

VS.totalODBBOICexHCalls

Source Section

Call Barring

totalODBBOIZCalls

Number of total Barring of outgoing inter-zonal calls - (operator determined)

Data Source

Call Server

Source Field

VS.totalODBBOIZCalls

Source Section

Call Barring

totalODBBOIZexHCalls

Number of total Barring of outgoing inter-zonal calls except those directed to Home PLMN country (BOIZ-exHC) - operator determined

Data Source

Call Server

Source Field

VS.totalODBBOIZexHCalls

Source Section

Call Barring

totalODBOST1Calls

Number of total Barring of outgoing operator specified type 1 calls - (operator determined)

Data Source

Call Server

Source Field

VS.totalODBOST1Calls

Source Section

Call Barring

totalODBOST2Calls

Number of total Barring of outgoing operator specified type 2 calls - (operator determined)

Data Source

Call Server

Source Field

VS.totalODBOST2Calls

Source Section

Call Barring

© Copyright IBM Corp. 1999, 2009. All rights reserved.

totalODBOST3Calls

Number of total Barring of outgoing operator specified type 3 calls - (operator determined)

Data Source

Call Server

Source Field

VS.totalODBOST3Calls

Source Section

Call Barring

totalODBOST4Calls

Number of total Barring of outgoing operator specified type 4 calls - (operator determined)

Data Source

Call Server

Source Field

VS.totalODBOST4Calls

Source Section

Call Barring

totalODBPREMECalls

Number of total Barring of outgoing entertainment based premium rate calls - (operator determined)

Data Source

Call Server

Source Field

VS.totalODBPREMECalls

Source Section

Call Barring

totalODBPREMICalls

Number of total Barring of outgoing information based premium rate calls - (operator determined)

Data Source

Call Server

Source Field

VS.totalODBPREMICalls

Source Section

Call Barring

totalODBSS

No vendor documentation could be found for this metric.

Data Source

Call Server

Source Field

VS.totalODBSS

Source Section

Supplementary Services (SS)

totalRejectCFMaxHopExceeded

Number of times of a call towards a CF active UE is not forwarded due to the maximum number of call fowardings

Data Source

Call Server

Source Field

VS.totalRejectCFMaxHopExceeded

Source Section

Call forwarding

© Copyright IBM Corp. 1999, 2009. All rights reserved.

totalRejectedCWConcurrentExceeded

Number of the times that a call is not CWed due to the maximum number of simultaneous CWs for the service group being reached (due to NDUB)

Data Source

Call Server

Source Field

VS.totalRejectedCWConcurrentExceeded

Source Section

Call Waiting and Call Hold

totalRejMPTYCallsMaxExceeded

Number of times of a multiple party call request by a MPTY call active UE is rejected due to the maximum number of multiple parties being reached

Data Source

Call Server

Source Field

VS.totalRejMPTYCallsMaxExceeded

Source Section

3-way Multi-Party

transSubIdentifiedWithIMSI_GSM

Transactions on the MM-layer where subscriber was identified with IMSI (GSM Technology Type)

Data Source

Call Server

Source Field

transSubIdentifiedWithIMSI

Source Section

Location Update (GSM)

transSubIdentifiedWithIMSI_UMTS

Transactions on the MM-layer where subscriber was identified with IMSI (UMTS Technology Type)

Data Source

Call Server

Source Field

transSubIdentifiedWithIMSI

Source Section

Location Update (UMTS)

transSubIdentifiedWithTMSI_GSM

Transactions on the MM-layer where subscriber was identified with TMSI (GSM Technology Type)

Data Source

Call Server

Source Field

transSubIdentifiedWithTMSI

Source Section

Location Update (GSM)

transSubIdentifiedWithTMSI_UMTS

Transactions on the MM-layer where subscriber was identified with TMSI (UMTS Technology Type)

Data Source

Call Server

Source Field

transSubIdentifiedWithTMSI

Source Section

Location Update (UMTS)

© Copyright IBM Corp. 1999, 2009. All rights reserved.

UMTSLocUpdAtt

UMTS Location Update Attempts

Data Source

Call Server

Source Field

VS.UMTSLocUpdAtt

Source Section

Miscellaneous Location Update

UMTSLocUpdAttSucc

UMTS Completed Location Update Attempts

Data Source

Call Server

Source Field

VS.UMTSLocUpdAttSucc

Source Section

Miscellaneous Location Update

unsuccExternHDOsWithLossOfConnectionPerMSC_GSM

Unsuccessful External Handovers with Loss of Connection (GSM Technology Type)

Data Source

Call Server

Source Field

unsuccExternHDOsWithLossOfConnectionPerMSC

Source Section

Hand Over (GSM)

unsuccExternHDOsWithLossOfConnectionPerMSC_UMTS

Unsuccessful External Handovers with Loss of Connection (UMTS Technology Type)

Data Source

Call Server

Source Field

unsuccExternHDOsWithLossOfConnectionPerMSC

Source Section

Hand Over (UMTS)

unsuccExternHDOsWithReconnectionPerMSC_GSM

Unsuccessful External Handovers with Reconnection to Old Channels (GSM Technology Type)

Data Source

Call Server

Source Field

unsuccExternHDOsWithReconnectionPerMSC

Source Section

Hand Over (GSM)

unsuccExternHDOsWithReconnectionPerMSC_UMTS

Unsuccessful External Handovers with Reconnection to Old Channels (UMTS Technology Type)

Data Source

Call Server

Source Field

unsuccExternHDOsWithReconnectionPerMSC

Source Section

Hand Over (UMTS)

VLRCapExceededPurged

This count is incremented every time a record not marked "Implicit Detached" or "Super-Charger Suspended" is purged to make room for new records because the VLR Capacity is exceeded.

© Copyright IBM Corp. 1999, 2009. All rights reserved.

Data Source

Call Server

Source Field

VS.VLRCapExceededPurged

Source Section

VLR

VLRCreated

This count is incremented every time a VLR is created.

Data Source

Call Server

Source Field

VS.VLRCreated

Source Section

VLR

VLRImpDtchdSubRecPrgd

This count is incremented every time a VLR entry that is marked "Implicitly Detached" is purged. This count is applicable when the Implicit Detach & MS-Purge feature is active.

Data Source

Call Server

Source Field

VS.VLRImpDtchdSubRecPrgd

Source Section

VLR

VLRImplicitlyDetached

This count is incremented every time a VLR entry is Implicitly Detached. This count is applicable when the "Detach & MS-PURGE" feature is active.

Data Source

Call Server

Source Field

VS.VLRImplicitlyDetached

Source Section

VLR

VLRRejLUAccRestr

Pegged for Location Update attempts that are rejected due to an Access Restriction.

Data Source

Call Server

Source Field

VS.VLRRejLUAccRestr

Source Section

VLR Record Maintenance

VLRRejLULACCluster

Pegged for Location Update attempts that are rejected due to a LAC Cluster Restriction.

Data Source

Call Server

Source Field

VS.VLRRejLULACCluster

Source Section

VLR Record Maintenance

VLRRejLURegZone

Pegged for Location Update attempts that are rejected for Regional Zone restriction.

Data Source

Call Server

© Copyright IBM Corp. 1999, 2009. All rights reserved.

Source Field

VS.VLRRejLURegZone

Source Section

VLR Record Maintenance

VLRSprChgrSuspndSubRecPrgd

This count is incremented every time a VLR entry that is marked "Super-Charger Suspended" is purged. This count is applicable when the Super-Charger Suspended feature is active.

Data Source

Call Server

Source Field

VS.VLRSprChgrSuspndSubRecPrgd

Source Section

VLR

VLRSuperChargerSuspended

This count is incremented every time a record is Super-Charger Suspended. This count is applicable when the Super-Charger Suspended feature is active.

Data Source

Call Server

Source Field

VS.VLRSuperChargerSuspended

Source Section

VLR

VLRUnsuspendedReused

This count is incremented every time a previously Super-Charger Suspended subscription record is reused by the VLR. It corresponds to the scenario where the LU is successful without an ISD for a previously Super-Charger Suspended subscription record. This count is applicable when the Super-Charger Suspended feature is active.

Data Source

Call Server

Source Field

VS.VLRUnsuspendedReused

Source Section

VLR

VLRUnsuspendedUpdated

This count is incremented every time a previously Super-Charger Suspended subscription record is updated by an ISD from the HLR because the Age_indicator at the HLR is different from the one provided by the VLR. It corresponds to the scenario where the LU is successful with an ISD for a previously Super-Charger Suspended subscription record. This count is applicable when the Super-Charger Suspended feature is active.

Data Source

Call Server

Source Field

VS.VLRUnsuspendedUpdated

Source Section

VLR

WASSIGND

This count is pegged for each WPS voice or CSD call origination attempt that is assigned a radio traffic channel (with or without queuing). This count is pegged only if the Wireless Priority Service parameter is set to yes.

Data Source

Call Server

Source Field

VS.WASSIGND

Source Section

Wireless Priority Service

© Copyright IBM Corp. 1999, 2009. All rights reserved.

WAttDirRetryGSM

This count is pegged for each WPS call invocation for which Directed Retry Handover to the GSM network has been attempted.

Data Source

Call Server

Source Field

WAttDirRetryGSM

Source Section

Wireless Priority Service

WINPPBypassTALInvoc

No vendor documentation could be found for this metric.

Data Source

Call Server

Source Field

VS.WINPPBypassTALInvoc

Source Section

Packet Gateway ANSI-41 Call Delivery

WINVOKET

This count is pegged for each WPS voice call invoked (WINVOKET) i.e. for each voice call originated with the WPS feature activation code prefix.

Data Source

Call Server

Source Field

VS.WINVOKET

Source Section

Wireless Priority Service

WSuccDirRetryGSM

This count is pegged each WPS call invocation for which Directed Retry Handover to the GSM network was successful.

Data Source

Call Server

Source Field

WSuccDirRetryGSM

Source Section

Wireless Priority Service

WTATTMPT

The number of calls that the switch recognizes as WPS calls that require trunks to points outside the MSC/VLR. This peg count is incremented by one for each WPS call origination attempt that requires an outgoing trunk for routing to another switch.

Data Source

Call Server

Source Field

VS.WTATTMPT

Source Section

Wireless Priority Service

XFERtoNumINVMsgSent

FPG Transfer To Number Request INVOKE Messages Sent

Data Source

Call Server

Source Field

VS.XFERtoNumINVMsgSent

Source Section

Packet Gateway ANSI-41 Call Delivery

© Copyright IBM Corp. 1999, 2009. All rights reserved.

XFERtoNumINVRetError

FPG Transfer To Number INVOKE RETURN ERRORS Message Received

Data Source

Call Server

Source Field

VS.XFERtoNumINVRetError

Source Section

Packet Gateway ANSI-41 Call Delivery

XFERtoNumMsgRouteFail

FPG Transfer To Number Request Message Route Failure

Data Source

Call Server

Source Field

VS.XFERtoNumMsgRouteFail

Source Section

Packet Gateway ANSI-41 Call Delivery

XFERtoNumREJMsgRcvd

FPG Transfer To Number INVOKE REJECT Message Received

Data Source

Call Server

Source Field

VS.XFERtoNumREJMsgRcvd

Source Section

Packet Gateway ANSI-41 Call Delivery

XFERtoNumReqMsgTO

FPG Transfer To Number Request Message Timeout

Data Source

Call Server

Source Field

VS.XFERtoNumReqMsgTO

Source Section

Packet Gateway ANSI-41 Call Delivery

SigPoint_DestGT Primitive Calculations

The following is a list of primitive calculations for the SigPoint_DestGT entity.

GRAPHmultiLineSeparator

Special Control Field for Multi-Line Graphs

Calculation

```
""
```

NUMDAYS

of days in Report

Calculation

```
DAYSINREPORT()
```

NUMHOURS

of hours in Summation Data

Calculation

SigPoint_DestGT Peg Counts

The following is a list of peg counts for the SigPoint_DestGT entity.

Data_Interval

Data interval for the Call Server data collection in seconds. It is taken from "duration" value of the relevant <granPeriod> tag in the Call Server XML data file.

© Copyright IBM Corp. 1999, 2009. All rights reserved.

Data Source

Call Server

Source Field

<granPeriod> tag "duration"

RoutingFailureNoTranslationAddress

The number of Routing Failures due to no translation for this specific address. This measurement is only required at SCCP nodes with global title translation capabilities. Q.752 Reference: 7.2

Data Source

Call Server

Source Field

VS.RoutingFailureNoTranslationAddress

Source Section

SS7 SCCP

RoutingFailureNoTranslationNature

The number of Routing failures due to no translation for address of such nature. This measurement is only required at SCCP nodes with global title translation capabilities. Q.752 Reference: 7.1

Data Source

Call Server

Source Field

VS.RoutingFailureNoTranslationNature

Source Section

SS7 SCCP

SigPoint_DestPC Primitive Calculations

The following is a list of primitive calculations for the SigPoint_DestPC entity.

GRAPHmultiLineSeparator

Special Control Field for Multi-Line Graphs

Calculation

```
""
```

NUMDAYS

of days in Report

Calculation

```
DAYSINREPORT()
```

NUMHOURS

of hours in Summation Data

Calculation

SigPoint_DestPC Peg Counts

The following is a list of peg counts for the SigPoint_DestPC entity.

Data_Interval

Data interval for the Call Server data collection in seconds. It is taken from "duration" value of the relevant <granPeriod> tag in the Call Server XML data file.

Data Source

Call Server

Source Field

<granPeriod> tag "duration"

DurationLinksetInaccesible

The duration (in seconds) of adjacent SPs not accessible. Q.752 Reference: 5.2

Data Source

Call Server

Source Field

VS.DurationLinksetInaccesible

© Copyright IBM Corp. 1999, 2009. All rights reserved.

Source Section

SS7

DurationRemoteISDNUPCongest

The total duration (in seconds) of remote ISDN-UP congestion. Q.752 Reference: 10.13

Data Source

Call Server

Source Field

VS.DurationRemoteISDNUPCongest

Source Section

SS7 SCCP

DurationRemoteISDNUPUnavail

The total duration (in seconds) of remote ISDN-UP unavailable. Q.752 Reference: 10.10

Data Source

Call Server

Source Field

VS.DurationRemoteISDNUPUnavail

Source Section

SS7 SCCP

ISDNUPmsgsReceived

The number of ISDN-UP messages received. Q.752 Reference: 11.2 Note: These measurements are accumulated over all message types.

Data Source

Call Server

Source Field

VS.ISDNUPmsgsReceived

Source Section

SS7 SCCP

ISDNUPmsgsSent

The number of ISDN-UP messages sent. Q.752 Reference: 11.1. Note: These measurements are accumulated over all message types.

Data Source

Call Server

Source Field

VS.ISDNUPmsgsSent

Source Section

SS7 SCCP

MSUDiscardedDueRoutingErr

The number of MSUs discarded due to a routing data error. Q.752 Reference: 5.5

Data Source

Call Server

Source Field

VS.MSUDiscardedDueRoutingErr

Source Section

SS7

RLCnotRcvdT5TO

The number of occurrences of the Release Complete (RLC) not received within T5 (Second RLC timer). Q.752 Reference: 12.5

Data Source

Call Server

Source Field

VS.RLCnotRcvdT5TO

© Copyright IBM Corp. 1999, 2009. All rights reserved.

Source Section

SS7 SCCP

RLSInitAbnormalCond

The number of occurrences that the release was initiated due to abnormal conditions.Q.752 Reference: 12.6

Data Source

Call Server

Source Field

VS.RLSInitAbnormalCond

Source Section

SS7 SCCP

RoutingFailureNetworkCongestion

The number of Routing Failures due to Network Congestion. Q.752 Reference: 7.4

Data Source

Call Server

Source Field

VS.RoutingFailureNetworkCongestion

Source Section

SS7 SCCP

RoutingFailureNetworkFailure

The number of Routing Failures due to Network Failure (Point Code not available). Q.752 Reference: 7.3

Data Source

Call Server

Source Field

VS.RoutingFailureNetworkFailure

Source Section

SS7 SCCP

RoutingFailureNoTranslationAddress

The number of SCCP Routing Failures due to no translation for this specific address. This measurement is only required at SCCP nodes with global title translation capabilities.

Data Source

Call Server

Source Field

VS.RoutingFailureNoTranslationAddress

Source Section

Per SS7 Service Member, per SSN

RoutingFailureNoTranslationNature

The number of SCCP Routing failures due to no translation for address of such nature. This measurement is only required at SCCP nodes with global title translation capabilities.

Data Source

Call Server

Source Field

VS.RoutingFailureNoTranslationNature

Source Section

Per SS7 Service Member, per SSN

RoutingFailureSubCong

The number of Routing Failures due to Subsystem Congestion. Q.752 Reference: 7.6

Data Source

Call Server

Source Field

VS.RoutingFailureSubCong

© Copyright IBM Corp. 1999, 2009. All rights reserved.

Source Section

SS7 SCCP

SignalingLinkSetFailure

The number of Adjacent SPs inaccessible. Q.752 Reference: 5.1

Data Source

Call Server

Source Field

VS.SignalingLinkSetFailure

Source Section

SS7

StartRemoteISDNCong

The number occurrences of the start of remote ISDN-UP congestion. Q.752 Reference: 10.11

Data Source

Call Server

Source Field

VS.StartRemoteISDNCong

Source Section

SS7 SCCP

StartRemoteISDNUPUnavail

The number occurrences of the start of remote ISDN-UP unavailable. Q.752 Reference: 10.8

Data Source

Call Server

Source Field

VS.StartRemoteISDNUPUnavail

Source Section

SS7 SCCP

StopRemoteISDNCong

The number occurrences of the stop of remote ISDN-UP congestion. Q.752 Reference: 10.12

Data Source

Call Server

Source Field

VS.StopRemoteISDNCong

Source Section

SS7 SCCP

StopRemoteISDNUPUnavail

The number occurrences of the stop of remote ISDN-UP unavailable. Q.752 Reference: 10.9

Data Source

Call Server

Source Field

VS.StopRemoteISDNUPUnavail

Source Section

SS7 SCCP

UnavailabilityRouteSet

The number of occurrences of route set unavailability to a given destination or set of destinations. Q.752 Reference: 4.9

Data Source

Call Server

Source Field

VS.UnavailabilityRouteSet

Source Section

SS7

© Copyright IBM Corp. 1999, 2009. All rights reserved.

SigPoint_DestPC_CIC Primitive Calculations

The following is a list of primitive calculations for the SigPoint_DestPC_CIC entity.

GRAPHmultiLineSeparator

Special Control Field for Multi-Line Graphs

Calculation

```
""
```

NUMDAYS

of days in Report

Calculation

```
DAYSINREPORT()
```

NUMHOURS

of hours in Summation Data

Calculation

SigPoint_DestPC_CIC Peg Counts

The following is a list of peg counts for the SigPoint_DestPC_CIC entity.

Data_Interval

Data interval for the Call Server data collection in seconds. It is taken from "duration" value of the relevant <granPeriod> tag in the Call Server XML data file.

Data Source

Call Server

Source Field

<granPeriod> tag "duration"

RLCnotRcvdT5TO

The number of occurrences of the Release Complete (RLC) not received within T5 (Second RLC timer). Q.752 Reference: 12.5 (this counter is pegged at one level up from M5.0)

Data Source

Call Server

Source Field

VS.RLCnotRcvdT5TO

Source Section

SS7 SCCP

RLSInitAbnormalCond

The number of occurrences that the release was initiated due to abnormal conditions.Q.752 Reference: 12.6 (this counter is pegged at one level up from M5.0)

Data Source

Call Server

Source Field

VS.RLSInitAbnormalCond

Source Section

SS7 SCCP

SigPoint_DestPC_SSN Primitive Calculations

The following is a list of primitive calculations for the SigPoint_DestPC_SSN entity.

GRAPHmultiLineSeparator

Special Control Field for Multi-Line Graphs

Calculation

```
""
```

NUMDAYS

of days in Report

Calculation

```
DAYSINREPORT()
```

NUMHOURS

of hours in Summation Data

© Copyright IBM Corp. 1999, 2009. All rights reserved.

Calculation

SigPoint_DestPC_SSN Peg Counts

The following is a list of peg counts for the SigPoint_DestPC_SSN entity.

Data_Interval

Data interval for the Call Server data collection in seconds. It is taken from "duration" value of the relevant <granPeriod> tag in the Call Server XML data file.

Data Source

Call Server

Source Field

<granPeriod> tag "duration"

RoutingFailureUneqUser

The number of Routing Failures due to an unequipped user (Subsystem). Q.752 Reference: 7.7

Data Source

Call Server

Source Field

VS.RoutingFailureUneqUser

Source Section

SS7 SCCP

RoutingSubsystemFailure

The number of Routing Failures due to Subsystem Failure. Q.752 Reference: 7.5

Data Source

Call Server

Source Field

VS.RoutingSubsystemFailure

Source Section

SS7 SCCP

SigPoint_SCCP Primitive Calculations

The following is a list of primitive calculations for the SigPoint_SCCP entity.

GRAPHmultiLineSeparator

Special Control Field for Multi-Line Graphs

Calculation

```
""
```

NUMDAYS

of days in Report

Calculation

```
DAYSINREPORT()
```

NUMHOURS

of hours in Summation Data

Calculation

SigPoint_SCCP Peg Counts

The following is a list of peg counts for the SigPoint_SCCP entity.

Data_Interval

Data interval for the Call Server data collection in seconds. It is taken from "duration" value of the relevant <granPeriod> tag in the Call Server XML data file.

Data Source

Call Server

Source Field

<granPeriod> tag "duration"

© Copyright IBM Corp. 1999, 2009. All rights reserved.

TotalMessagesGlobalTranslation

The total number of messages requiring global title translation. This measures the utilization of the translation function within SCCP Routing Control and is a count of all messages [including locally generated (X)UDTS messages] for which global title translation is attempted. The measurement is only applicable at nodes with translation capabilities. Q.752 Reference: 9.5

Data Source

Call Server

Source Field

VS.TotalMessagesGlobalTranslation

Source Section

SS7 SCCP

TotalMessagesHandled

The total number of messages handled (from local or remote subsystems). All messages processed by SCCP Routing Control whether or not the message is processed or delivered successfully. It is assumed that a message transiting an SCCP relay point is counted only once. Q.752 Reference: 9.3

Data Source

Call Server

Source Field

VS.TotalMessagesHandled

Source Section

SS7 SCCP

TotalMessagesLocalSubsystems

The total number of messages intended for local subsystems. All messages processed by SCCP Routing Control whether or not the message is processed or delivered successfully and received for local subsystems. This includes for example RLC messages received in a relay node for a connection section CR or (X)UDT messages received for an unequipped subsystem etc. Q.752 Reference: 9.4

Data Source

Call Server

Source Field

VS.TotalMessagesLocalSubsystems

Source Section

SS7 SCCP

SigPoint_SCCP_SSN Primitive Calculations

The following is a list of primitive calculations for the SigPoint_SCCP_SSN entity.

GRAPHmultiLineSeparator

Special Control Field for Multi-Line Graphs

Calculation

```
""
```

NUMDAYS

of days in Report

Calculation

```
DAYSINREPORT()
```

NUMHOURS

of hours in Summation Data

Calculation

SigPoint_SCCP_SSN Peg Counts

The following is a list of peg counts for the SigPoint_SCCP_SSN entity.

Data_Interval

Data interval for the Call Server data collection in seconds. It is taken from "duration" value of the relevant <granPeriod> tag in the Call Server XML data file.

Data Source

Call Server

© Copyright IBM Corp. 1999, 2009. All rights reserved.

Source Field

<granPeriod> tag "duration"

TotalDT1MessagesSink

The number of DT1 messages received from MTP per sink SSN. Q.752 Reference: 9.9

Data Source

Call Server

Source Field

VS.TotalDT1MessagesSink

Source Section

SS7 SCCP

TotalDT1MessagesSource

The number of DT1 messages sent to MTP per source SSN. Q.752 Reference: 9.10

Data Source

Call Server

Source Field

VS.TotalDT1MessagesSource

Source Section

SS7 SCCP

TotalDT2MessagesSink

The number of DT2 messages received from MTP per sink SSN. Q.752 Reference: 9.11

Data Source

Call Server

Source Field

VS.TotalDT2MessagesSink

Source Section

SS7 SCCP

TotalDT2MessagesSource

The number of DT2 messages sent to MTP per source SSN. Q.752 Reference: 9.12

Data Source

Call Server

Source Field

VS.TotalDT2MessagesSource

Source Section

SS7 SCCP

TotalMessagesOrigClassSourceSSN

The total number of (X)UDT messages originated per class and source SSN. Q.752 Reference: 9.6

Data Source

Call Server

Source Field

VS.TotalMessagesOrigClassSourceSSN

Source Section

SS7 SCCP

TotalMessagesTermClassSinkSSN

The total number of (X)UDT messages terminated per class and sink SSN. Q.752 Reference: 9.7

Data Source

Call Server

Source Field

VS.TotalMessagesTermClassSinkSSN

Source Section

SS7 SCCP

© Copyright IBM Corp. 1999, 2009. All rights reserved.

SigPoint_TCAP Primitive Calculations

The following is a list of primitive calculations for the SigPoint_TCAP entity.

GRAPHmultiLineSeparator

Special Control Field for Multi-Line Graphs

Calculation

```
""
```

NUMDAYS

of days in Report

Calculation

```
DAYSINREPORT()
```

NUMHOURS

of hours in Summation Data

Calculation

SigPoint_TCAP Peg Counts

The following is a list of peg counts for the SigPoint_TCAP entity.

Data_Interval

Data interval for the Call Server data collection in seconds. It is taken from "duration" value of the relevant <granPeriod> tag in the Call Server XML data file.

Data Source

Call Server

Source Field

<granPeriod> tag "duration"

TCmsgsReceived

The number of Transaction Capabilities (TC) messages received by the node. (Q.752 Reference: 13.2). There are several cases for the TCAP counts: 1) TCAP for CAMEL, 2) TCAP for IS41 and WIN, 3) TCAP for MAP. The counts will be collected per IN, per TCAP stack for the case 1 and per VLR, per TCAP stack for cases 2 and 3.

Data Source

Call Server

Source Field

VS.TCmsgsReceived

Source Section

SS7 SCCP

TCmsgsSent

The number of Transaction Capabilities (TC) messages sent by the node. (Q.752 Reference: 13.1). There are several cases for the TCAP counts: 1) TCAP for CAMEL, 2) TCAP for IS41 and WIN, 3) TCAP for MAP. The counts will be collected per IN, per TCAP stack for the case 1 and per VLR, per TCAP stack for cases 2 and 3.

Data Source

Call Server

Source Field

VS.TCmsgsSent

Source Section

SS7 SCCP

TCprotErrP_abortBadFrmtTP

TC protocol errors detected in transaction portion with P abort cause Badly Formatted TP.

Data Source

Call Server

Source Field

VS.TCprotErrP_abortBadFrmtTP

Source Section

TCAP Messages

TCprotErrP_abortIncorTP

TC protocol errors detected in transaction portion with P abort caus Incorrect TP.

© Copyright IBM Corp. 1999, 2009. All rights reserved.

Data Source

Call Server

Source Field

VS.TCprotErrP_abortIncorTP

Source Section

TCAP Messages

TCprotErrP_abortRscLmt

TC protocol errors detected in transaction portion with P abort cause resource limitation.

Data Source

Call Server

Source Field

VS.TCprotErrP_abortRscLmt

Source Section

TCAP Messages

TCprotErrP_abortUnrecMsgType

TC protocol errors detected in transaction portion with P abort cause Unrecognized Message Type.

Data Source

Call Server

Source Field

VS.TCprotErrP_abortUnrecMsgType

Source Section

TCAP Messages

TCprotErrP_abortUnrecTID

TC protocol errors detected in transaction portion with P abort cause unrecognized Transaction ID.

Data Source

Call Server

Source Field

VS.TCprotErrP_abortUnrecTID

Source Section

TCAP Messages

SigTran_SCTPAssoc Primitive Calculations

The following is a list of primitive calculations for the SigTran_SCTPAssoc entity.

GRAPHmultiLineSeparator

Special Control Field for Multi-Line Graphs

Calculation

```
""
```

NUMDAYS

of days in Report

Calculation

```
DAYSINREPORT()
```

NUMHOURS

of hours in Summation Data

Calculation

SigTran_SCTPAssoc Peg Counts

The following is a list of peg counts for the SigTran_SCTPAssoc entity.

Data_Interval

Data interval for the Call Server data collection in seconds. It is taken from "duration" value of the relevant <granPeriod> tag in the Call Server XML data file.

© Copyright IBM Corp. 1999, 2009. All rights reserved.

Data Source

Call Server

Source Field

<granPeriod> tag "duration"

SCTPBadChunksRecv

This count shall be pegged when a bad SCTP chunk is received and gives an indication of the number of times Error chunk was sent.

Data Source

Call Server

Source Field

VS.SCTPBadChunksRecv

Source Section

SIGTRAN and SCTP

SCTPChunksRecv

This count shall be pegged when an SCTP chunk is received and gives indication of traffic received.

Data Source

Call Server

Source Field

VS.SCTPChunksRecv

Source Section

SIGTRAN and SCTP

SCTPChunksTrans

This count shall be pegged when an SCTP chunk is transmitted and gives indication of traffic sent.

Data Source

Call Server

Source Field

VS.SCTPChunksTrans

Source Section

SIGTRAN and SCTP

SCTPConnEstablished

This count shall be pegged when an SCTP(Stream Control Transport Protocol) connection is established.

Data Source

Call Server

Source Field

VS.SCTPConnEstablished

Source Section

SIGTRAN and SCTP

SCTPRecvAborts

This count shall be pegged when an SCTP Abort chunk is received.

Data Source

Call Server

Source Field

VS.SCTPRecvAborts

Source Section

SIGTRAN and SCTP

SigTran_SG Primitive Calculations

The following is a list of primitive calculations for the SigTran_SG entity.

GRAPHmultiLineSeparator

Special Control Field for Multi-Line Graphs

© Copyright IBM Corp. 1999, 2009. All rights reserved.

Calculation

```
""
```

NUMDAYS

of days in Report

Calculation

```
DAYSINREPORT()
```

NUMHOURS

of hours in Summation Data

Calculation

SigTran_SG Peg Counts

The following is a list of peg counts for the SigTran_SG entity.

Data_Interval

Data interval for the Call Server data collection in seconds. It is taken from "duration" value of the relevant <granPeriod> tag in the Call Server XML data file.

Data Source

Call Server

Source Field

<granPeriod> tag "duration"

M3UADavaMsgRecv

This count shall be pegged when the SS7 destination is now reachable and an DAVA (M3UA Destination Available Message) message is received at the LCP.

Data Source

Call Server

Source Field

VS.M3UADavaMsgRecv

Source Section

SIGTRAN and SCTP

M3UADunaMsgRecv

This count shall be pegged when the SS7 destination is not reachable and an DUNA (M3UA Destination Unavailable Message) message is received at the LCP.

Data Source

Call Server

Source Field

VS.M3UADunaMsgRecv

Source Section

SIGTRAN and SCTP

M3UADupuMsgRecv

This count shall be pegged when an DUPU(M3UA Destination User Part Unavailable Message) message is received. It gives indication of MTP3 User Peer Unavailable.

Data Source

Call Server

Source Field

VS.M3UADupuMsgRecv

Source Section

SIGTRAN and SCTP

M3UAErrorMsgRecv

This count shall be pegged when error message is received with incoming/outgoing M3UA messages.

Data Source

Call Server

Source Field

VS.M3UAErrorMsgRecv

© Copyright IBM Corp. 1999, 2009. All rights reserved.

Source Section

SIGTRAN and SCTP

M3UAErrorMsgTrans

This count shall be pegged when error message is transmitted with incoming/outgoing M3UA messages.

Data Source

Call Server

Source Field

VS.M3UAErrorMsgTrans

Source Section

SIGTRAN and SCTP

M3UASconMsgRecv

This count shall be pegged when an SCON (Signalling Congestion) message is received. It gives indication of SS7 Destination congestion.

Data Source

Call Server

Source Field

VS.M3UASconMsgRecv

Source Section

SIGTRAN and SCTP

SNMP_Interface Primitive Calculations

The following is a list of primitive calculations for the SNMP_Interface entity.

GRAPHmultiLineSeparator

Special Control Field for Multi-Line Graphs

Calculation

""

NUMDAYS

of days in Report

Calculation

```
DAYSINREPORT()
```

NUMHOURS

of hours in Summation Data

Calculation

SNMP_Interface Peg Counts

The following is a list of peg counts for the SNMP_Interface entity.

Data_Interval

Data interval for the Call Server data collection in seconds. It is taken from "duration" value of the relevant <granPeriod> tag in the Call Server XML data file.

Data Source

Call Server

Source Field

<granPeriod> tag "duration"

ifHCInOctets_20

The number of IP octets received at the ESC based on SNMP ifXTable. Port value: 20

Data Source

Call Server

Source Field

VS.ifHCInOctets.20

Source Section

Ethernet Switch Card

ifHCInOctets_21

The number of IP octets received at the ESC based on SNMP ifXTable. Port value: 21

© Copyright IBM Corp. 1999, 2009. All rights reserved.

Data Source

Call Server

Source Field

VS.ifHCInOctets.21

Source Section

Ethernet Switch Card

ifHCInOctets_22

The number of IP octets received at the ESC based on SNMP ifXTable. Port value: 22

Data Source

Call Server

Source Field

VS.ifHCInOctets.22

Source Section

Ethernet Switch Card

ifHCInOctets_23

The number of IP octets received at the ESC based on SNMP ifXTable. Port value: 23

Data Source

Call Server

Source Field

VS.ifHCInOctets.23

Source Section

Ethernet Switch Card

ifHCInOctets_24

The number of IP octets received at the ESC based on SNMP ifXTable. Port value: 24

Data Source

Call Server

Source Field

VS.ifHCInOctets.24

Source Section

Ethernet Switch Card

ifHCOutOctets_20

The number of IP octets transmitted at the ESC based on SNMP ifXTable.Port value: 20

Data Source

Call Server

Source Field

VS.ifHCOutOctets.20

Source Section

Ethernet Switch Card

ifHCOutOctets_21

The number of IP octets transmitted at the ESC based on SNMP ifXTable.Port value: 21

Data Source

Call Server

Source Field

VS.ifHCOutOctets.21

Source Section

Ethernet Switch Card

ifHCOutOctets_22

The number of IP octets transmitted at the ESC based on SNMP ifXTable.Port value: 22

Data Source

Call Server

Source Field

VS.ifHCOutOctets.22

© Copyright IBM Corp. 1999, 2009. All rights reserved.

Source Section

Ethernet Switch Card

ifHCOutOctets_23

The number of IP octets transmitted at the ESC based on SNMP ifXTable.Port value: 23

Data Source

Call Server

Source Field

VS.ifHCOutOctets.23

Source Section

Ethernet Switch Card

ifHCOutOctets_24

The number of IP octets transmitted at the ESC based on SNMP ifXTable.Port value: 24

Data Source

Call Server

Source Field

VS.ifHCOutOctets.24

Source Section

Ethernet Switch Card

ifInDiscards

The number of inbound packets which were chosen to be discarded even though no errors had been detected to prevent their being deliverable to a higher-layer protocol. One possible reason for discarding such a packet could be to free up buffer space.

Data Source

Call Server

Source Field

VS.ifInDiscards

Source Section

Ethernet InterFace

ifInDiscards_20

The number of IP packets that were dropped due to no resources available. Port value: 20

Data Source

Call Server

Source Field

VS.ifInDiscards.20

Source Section

Ethernet Switch Card

ifInDiscards_21

The number of IP packets that were dropped due to no resources available. Port value: 21

Data Source

Call Server

Source Field

VS.ifInDiscards.21

Source Section

Ethernet Switch Card

ifInDiscards_22

The number of IP packets that were dropped due to no resources available. Port value: 22

Data Source

Call Server

Source Field

VS.ifInDiscards.22

Source Section

Ethernet Switch Card

© Copyright IBM Corp. 1999, 2009. All rights reserved.

ifInDiscards_23

The number of IP packets that were dropped due to no resources available. Port value: 23

Data Source

Call Server

Source Field

VS.ifInDiscards.23

Source Section

Ethernet Switch Card

ifInDiscards_24

The number of IP packets that were dropped due to no resources available. Port value: 24

Data Source

Call Server

Source Field

VS.ifInDiscards.24

Source Section

Ethernet Switch Card

ifInErrors

The number of inbound packets that contained errors preventing them from being deliverable to a higher-layer protocol.

Data Source

Call Server

Source Field

VS.ifInErrors

Source Section

Ethernet InterFace

ifInErrors_20

The number of IP packets that were received with an error at the ESC. Port value: 20

Data Source

Call Server

Source Field

VS.ifInErrors.20

Source Section

Ethernet Switch Card

ifInErrors_21

The number of IP packets that were received with an error at the ESC. Port value: 21

Data Source

Call Server

Source Field

VS.ifInErrors.21

Source Section

Ethernet Switch Card

ifInErrors_22

The number of IP packets that were received with an error at the ESC. Port value: 22

Data Source

Call Server

Source Field

VS.ifInErrors.22

Source Section

Ethernet Switch Card

ifInErrors_23

The number of IP packets that were received with an error at the ESC. Port value: 23

© Copyright IBM Corp. 1999, 2009. All rights reserved.

Data Source

Call Server

Source Field

VS.ifInErrors.23

Source Section

Ethernet Switch Card

ifInErrors_24

The number of IP packets that were received with an error at the ESC. Port value: 24

Data Source

Call Server

Source Field

VS.ifInErrors.24

Source Section

Ethernet Switch Card

ifInOctets

The total number of octets received on the interface including framing characters.

Data Source

Call Server

Source Field

VS.ifInOctets

Source Section

Ethernet InterFace

ifOutDiscards

The number of outbound packets which were chosen to be discarded even though no errors had been detected to prevent their being transmitted. One possible reason for discarding such a packet could be to free up buffer space.

Data Source

Call Server

Source Field

VS.ifOutDiscards

Source Section

Ethernet InterFace

ifOutErrors

The number of outbound packets that could not be transmitted because of errors.

Data Source

Call Server

Source Field

VS.ifOutErrors

Source Section

Ethernet InterFace

ifOutOctets

The total number of octets transmitted out of the interface including framing characters.

Data Source

Call Server

Source Field

VS.ifOutOctets

Source Section

Ethernet InterFace

tcpActiveOpens

The number of times TCP connections have made a direct transition to the SYN-SENT state from the CLOSED state.

© Copyright IBM Corp. 1999, 2009. All rights reserved.

Data Source

Call Server

Source Field

VS.tcpActiveOpens

Source Section

TCP

tcpAttemptFails

The number of times TCP connections have made a direct transition to the CLOSED state from either the SYN-SENT state or the SYN-RCVD state plus the number of times TCP connections have made a direct transition to the LISTEN state from the SYN-RCVD state.

Data Source

Call Server

Source Field

VS.tcpAttemptFails

Source Section

TCP

tcpCurrEstab

The number of TCP connections for which the current state is either ESTABLISHED or CLOSE-WAIT.

Data Source

Call Server

Source Field

VS.tcpCurrEstab

Source Section

TCP

tcpEstabResets

The number of times TCP connections have made a direct transition to the CLOSED state from either the ESTABLISHED state or the CLOSE-WAIT state.

Data Source

Call Server

Source Field

VS.tcpEstabResets

Source Section

TCP

tcpInErrs

The total number of segments received in error. This count includes segments received on currently established connections.

Data Source

Call Server

Source Field

VS.tcpInErrs

Source Section

TCP

tcpInSegs

The total number of segments received including those received in error. This count includes segments received on currently established connections.

Data Source

Call Server

Source Field

VS.tcpInSegs

Source Section

TCP

tcpOutRsts

The total number of outgoing resets generated by a TCP.

© Copyright IBM Corp. 1999, 2009. All rights reserved.

Data Source

Call Server

Source Field

VS.tcpOutRsts

Source Section

TCP

tcpOutSegs

The total number of segments sent including those on current connections but excluding those containing only retransmitted octets.

Data Source

Call Server

Source Field

VS.tcpOutSegs

Source Section

TCP

tcpRetransSegs

The total number of segments retransmitted - that is the number of TCP segments transmitted containing one or more previously transmitted octets.

Data Source

Call Server

Source Field

VS.tcpRetransSegs

Source Section

TCP

udpInDatagrams

The total number of UDP datagrams delivered to UDP users.

Data Source

Call Server

Source Field

VS.udpInDatagrams

Source Section

UDP

udpInErrors

The number of received UDP datagrams that could not be delivered for reasons other than the lack of an application at the destination port.

Data Source

Call Server

Source Field

VS.udpInErrors

Source Section

UDP

udpNoPorts

The total number of received UDP datagrams for which there was no application at the destination port.

Data Source

Call Server

Source Field

VS.udpNoPorts

Source Section

UDP

udpOutDatagrams

The total number of UDP datagrams sent from this entity.

© Copyright IBM Corp. 1999, 2009. All rights reserved.

Data Source

Call Server

Source Field

VS.udpOutDatagrams

Source Section

UDP

SNMP_Node Primitive Calculations

The following is a list of primitive calculations for the SNMP_Node entity.

GRAPHmultiLineSeparator

Special Control Field for Multi-Line Graphs

Calculation

```
""
```

NUMDAYS

of days in Report

Calculation

```
DAYSINREPORT()
```

NUMHOURS

of hours in Summation Data

SNMP_Traps Primitive Calculations

The following is a list of primitive calculations for the SNMP_Traps entity.

GRAPHmultiLineSeparator

Special Control Field for Multi-Line Graphs

Calculation

```
""
```

NUMDAYS

of days in Report

Calculation

```
DAYSINREPORT()
```

NUMHOURS

of hours in Summation Data

Calculation

SNMP_Traps Peg Counts

The following is a list of peg counts for the SNMP_Traps entity.

Average_SNMP_Trap_Rate_All_SNEs

The average rate at which SNMP traps from all SNEs combined are coming into the MI-Agent.

Data Source

Call Server

Source Field

[VS.]Average_SNMP_Trap_Rate_All_SNEs

Source Section

MI Agent SNMP Trap

Data_Interval

Data interval for the Call Server data collection in seconds. It is taken from "duration" value of the relevant <granPeriod> tag in the Call Server XML data file.

Data Source

Call Server

Source Field

<granPeriod> tag "duration"

Peak_SNMP_Trap_Rate_All_SNEs

The highest rate at which SNMP traps from all SNEs combined are coming into the MI-Agent.

Data Source

Call Server

© Copyright IBM Corp. 1999, 2009. All rights reserved.

Source Field

[VS.]Peak_SNMP_Trap_Rate_All_SNEs

Source Section

MI Agent SNMP Trap

SNMP_Trap_Count_All_SNEs

The number of SNMP traps that have come into the MI-Agent from all the southbound interfaces for all sub-network elements of the MI-Agent.

Data Source

Call Server

Source Field

[VS.]SNMP_Trap_Count_All_SNEs

Source Section

MI Agent SNMP Trap

SNMP_Trap_Overload_Time

The number of seconds that the MI-Agent was exceeding the defined thresholds for the SNMP Trap Rate for an individual SNE or for all SNEs combined, and therefore was dropping incoming SNMP traps.

Data Source

Call Server

Source Field

[VS.]SNMP_Trap_Overload_Time

Source Section

MI Agent SNMP Trap

SNMP_Traps_Dropped_All_SNEs

The number of SNMP traps from all SNEs that the MI-Agent dropped due to the defined thresholds for the SNMP Trap Rates being exceeded.

Data Source

Call Server

Source Field

[VS.]SNMP_Traps_Dropped_All_SNEs

Source Section

MI Agent SNMP Trap

SubNE Primitive Calculations

The following is a list of primitive calculations for the SubNE entity.

GRAPHmultiLineSeparator

Special Control Field for Multi-Line Graphs

Calculation

```
""
```

NUMDAYS

of days in Report

Calculation

```
DAYSINREPORT()
```

NUMHOURS

of hours in Summation Data

Calculation

SubNE Peg Counts

The following is a list of peg counts for the SubNE entity.

Average_SNMP_Trap_Rate_Per_SNE

The average rate at which SNMP traps from an individual SNE are coming into the MI-Agent.

Data Source

Call Server

Source Field

[VS.]Average_SNMP_Trap_Rate_Per_SNE

© Copyright IBM Corp. 1999, 2009. All rights reserved.

Source Section

MI Agent SNMP Trap Per Sub Network Element

Data_Interval

Data interval for the Call Server data collection in seconds. It is taken from "duration" value of the relevant <granPeriod> tag in the Call Server XML data file.

Data Source

Call Server

Source Field

<granPeriod> tag "duration"

Peak_SNMP_Trap_Rate_Per_SNE

The highest rate at which SNMP traps from an individual SNE are coming into the MI-Agent.

Data Source

Call Server

Source Field

[VS.]Peak_SNMP_Trap_Rate_Per_SNE

Source Section

MI Agent SNMP Trap Per Sub Network Element

SNMP_Trap_Count_Per_SNE

SNMP traps that have come into the MI-Agent from the southbound interface for each sub-network element

Data Source

Call Server

Source Field

[VS.]SNMP_Trap_Count_Per_SNE

Source Section

MI Agent SNMP Trap Per Sub Network Element

SNMP_Traps_Dropped_Per_SNE

SNMP traps from an individual SNE that the MI-Agent dropped due to the defined thresholds for the SNMP Trap Rate for an individual SNE being exceeded.

Data Source

Call Server

Source Field

[VS.]SNMP_Traps_Dropped_Per_SNE

Source Section

MI Agent SNMP Trap Per Sub Network Element

System Primitive Calculations

The following is a list of primitive calculations for the System entity.

GRAPHmultiLineSeparator

Special Control Field for Multi-Line Graphs

Calculation

```
""
```

NUMDAYS

of days in Report

Calculation

```
DAYSINREPORT()
```

NUMHOURS

of hours in Summation Data

Calculation

T_C_R_Cause Primitive Calculations

The following is a list of primitive calculations for the T_C_R_Cause entity.

© Copyright IBM Corp. 1999, 2009. All rights reserved.

GRAPHmultiLineSeparator

Special Control Field for Multi-Line Graphs

Calculation

```
""
```

NUMDAYS

of days in Report

Calculation

```
DAYSINREPORT()
```

NUMHOURS

of hours in Summation Data

Calculation

T_C_R_Cause Peg Counts

The following is a list of peg counts for the T_C_R_Cause entity.

Data_Interval

Data interval for the Call Server data collection in seconds. It is taken from "duration" value of the relevant <granPeriod> tag in the Call Server XML data file.

Data Source

Call Server

Source Field

<granPeriod> tag "duration"

RCPT_HOF_MSCHDOs

Receipt of Handover/Relocation Failures from Target RAN at Target MSC (controlling or non-controlling) for inter-/intra-MSC Handovers/Relocations. This count shall be pegged at the controlling or non-controlling MSC when Handover/Relocation Failures from Target RAN are received at the Target MSC (controlling or non-controlling) for inter-/intra-MSC Handovers/Relocations with one of: GSM cause or UMTS cause. UMTS cause is an integer 0-255. GSM cause is an octet converted to integer 0-255.

Data Source

Call Server

Source Field

VS.RCPT_HOF_MSCHDOs

Source Section

Handover

RcvMAPPrepHORspFOutgIntMSCHDOs

Receipt of MAP PrepareHO Response Failures for outgoing inter-MSC Handovers. This count shall be pegged at the controlling MSC when an inter switch signalling MAP PrepareHO failure response message is received for inter MSC Handovers with one of: GSM cause or UMTS cause or MAP error cause. UMTS cause is an integer 0-255. GSM cause is an octet converted to integer 0-255. MAP error cause is present only if the UMTS/GSM cause is not received. It is a choice of 5 cause values: 34=system failure, 35=data missing, 36=unexpectedDataValue, 25=-noHandoverNumberAvailable, 42=targetCellOutsideGroupCallArea

Data Source

Call Server

Source Field

VS.RCPT_MAPPrepHORspFOutgInterMSCHDOs

Source Section

Handover

T_LAC

Target LAC

Data Source

Call Server

Source Field

T_LACID

Source Section

measObjLdn

© Copyright IBM Corp. 1999, 2009. All rights reserved.

T_PLMN

Target PLMN

Data Source

Call Server

Source Field

T_PLMN

Source Section

measObjLdn

TargetCELLorRNC

Target CELL or RNC

Data Source

Call Server

Source Field

T_RNCID or T_CellID

Source Section

measObjLdn

T_CELL_RNC Primitive Calculations

The following is a list of primitive calculations for the T_CELL_RNC entity.

GRAPHmultiLineSeparator

Special Control Field for Multi-Line Graphs

Calculation

```
""
```

NUMDAYS

of days in Report

Calculation

```
DAYSINREPORT()
```

NUMHOURS

of hours in Summation Data

Calculation

T_CELL_RNC Peg Counts

The following is a list of peg counts for the T_CELL_RNC entity.

attIncomingExternalIntraMSCHDOs

Attempted incoming External intra-MSC Handovers

Data Source

Call Server

Source Field

attIncomingExternalIntraMSCHDOs

Source Section

MSC HandOver (HDO)

attIncomingInterMSCHDOs

Attempted incoming inter-MSC Handovers

Data Source

Call Server

Source Field

attIncomingInterMSCHDOs

Source Section

MSC HandOver (HDO)

attOutgoingExternalIntraMSCHDOs

Attempted outgoing External intra-MSC Handovers

Data Source

Call Server

© Copyright IBM Corp. 1999, 2009. All rights reserved.

Source Field

attOutgoingExternalIntraMSCHDOs

Source Section

MSC HandOver (HDO)

attOutgoingInterMSCHDOs

Attempted outgoing inter-MSC Handovers

Data Source

Call Server

Source Field

attOutgoingInterMSCHDOs

Source Section

MSC HandOver (HDO)

attSubsequentInterMSCHDOsMSCa

Attempted subsequent inter-MSC Handovers (back to MSCa)

Data Source

Call Server

Source Field

attSubsequentInterMSCHDOsMSCa

Source Section

MSC HandOver (HDO)

attSubsequentInterMSCHDOsMSCc

Attempted subsequent inter-MSC Handovers (to MSCc)

Data Source

Call Server

Source Field

attSubsequentInterMSCHDOsMSCc

Source Section

MSC HandOver (HDO)

Data_Interval

Data interval for the Call Server data collection in seconds. It is taken from "duration" value of the relevant <granPeriod> tag in the Call Server XML data file.

Data Source

Call Server

Source Field

<granPeriod> tag "duration"

HO_IAMFailOutgoingInterMSCHDOs

Handover IAM Failure for outgoing inter-MSC Handovers. This count shall be pegged at the controlling MSC when an inter switch signalling IAM failure occurs (e.g. due to outgoing trunk blocked, busy, or out of service or Handover Number/route not provisioned) for inter MSC Handovers. The Target PLMN and Target LAC identify the MSC which sent the Handover number to the MSC with the source RAN.

Data Source

Call Server

Source Field

VS.HO_IAMFailOutgoingInterMSCHDOs

Source Section

Handover

HO_MGWUnavailDuringHDOsSource

MGW Resources Unavailable during Handover&Relocation associated to Source RAN. This count shall be pegged at the Controlling / Non-controlling MSC when MGW resources are unavailable associated to the source RAN, causing the Handover/Relocation procedure to fail.

Data Source

Call Server

Source Field

VS.HO_MGWUnavailDuringHDOsSource

© Copyright IBM Corp. 1999, 2009. All rights reserved.

Source Section

Handover

HO_MGWUnavailDuringHDOsTarget

MGW Resources Unavailable during Handover&Relocation associated to Target RAN. This count shall be pegged at the Controlling / Non-controlling MSC when MGW resources are unavailable associated to the target RAN, causing the Handover/Relocation procedure to fail. Notes: MSC sends either: - BSSMAP cause 'Equipment failure' or - RANAP cause 'no resource available (114)'

Data Source

Call Server

Source Field

VS.HO_MGWUnavailDuringHDOsTarget

Source Section

Handover

HO_RouteFailOutgIntraMSCHDOs

Handover Route Failure for intra-MSC Handovers at the Controlling/Non-Controlling MSC. This count shall be pegged at the controlling/non-controlling MSC when an intra-MSC handover failure occurs due to an intra- switch signalling failure (e.g. due to outgoing trunk blocked, busy, or out of service or Handover Number / Route not provisioned).

Data Source

Call Server

Source Field

VS.HO_RouteFailOutgoingIntraMSCHDOs

Source Section

Handover

HOblkdContMSC

Handover Blocked at Controlling MSC. This count shall be pegged at the controlling MSC when a handover is rejected by the MSC due to PLMN/RAT/LAC restrictions and it sends one of the following : a MAP PrepareSubsequentHO response contains [HANDOVER FAILURE with cause "Invalid Cell" or a RELOCATION FAILURE with cause "Relocation Target Not Allowed (50)"] , a HANDOVER REQUIRED REJECT with cause "Invalid Cell" or

CONFUSION or with a RELOCATION PREPARATION FAILURE with cause "Relocation Target Not Allowed (50)" or "Relocation Failure in Target CN/RNC or Target System (29)".

Data Source

Call Server

Source Field

VS.HOblkdContMSC

Source Section

Handover

HOblkdNonContMSC

Handover Blocked at Non-Controlling MSC. This count shall be pegged at the controlling MSC when a handover is rejected by the MSC due to PLMN/RAT/LAC restrictions and it sends one of the following : a MAP PrepareSubsequentHO response contains [HANDOVER FAILURE with cause "Invalid Cell" or a RELOCATION FAILURE with cause "Relocation Target Not Allowed (50)"], a HANDOVER REQUIRED REJECT with cause "Invalid Cell" or CONFUSION or with a RELOCATION PREPARATION FAILURE with cause "Relocation Target Not Allowed (50)" or "Relocation Failure in Target CN/RNC or Target System (29)".

Data Source

Call Server

Source Field

VS.HOblkdNonContMSC

Source Section

Handover

HOF_unprovLACOutgIntMSCHDOs

Handover Failure due to unprovisioned LAC for outgoing inter-MSC Handovers. This count shall be pegged at the controlling MSC when an inter switch signalling MAP PrepareHO message cannot be sent for inter MSC Handovers to the target PLMN and LAC. This count shall also be pegged at the MSC upon receiving a MAP PrepareSubsequent handover with unprovisioned target which is assumed to be on MSCc (i.e., target not found to be on this MSCa).

Data Source

Call Server

© Copyright IBM Corp. 1999, 2009. All rights reserved.

Source Field

VS.HOF_unprovLACOutgoingInterMSCHDOs

Source Section

Handover

HOF_UnprovTargetIdHDOs

Handover/Relocation Failure due to unprovisioned Target ID (either target LAC / Cell / RNC ID) for handovers/relocations with targets on this switch (incoming inter-MSC). This count shall be pegged at the target MSC when the target ID (either target LAC / Cell ID / RNC ID) is unprovisioned at this MSC with target RAN. This count shall pegged at the Non-Controlling MSC upon receiving an inter-switch signalling MAP PrepareHO message. NOTE-1: The serving location will not be available; therefore, the S_PLMN, S_LAC, S_RNC will be populated with all F's for a UMTS to UMTS relocation. NOTE-2: There are also cases where it can not be determined if the source is GSM or UMTS. For these cases the S_PLMN, S_LAC and S_CELL parameters shall be populated with all F's.

Data Source

Call Server

Source Field

VS.HOF_UnprovTargetIdHDOs

Source Section

Handover

RetunAttforIncmgInterMSCHDOs

Retuning Attempt Request for incoming inter-MSC Handovers at Non-controlling MSC. This count shall be pegged at the non-controlling MSC when: for circuit-only handover - a) an inter switch signalling MAP PrepareHO Response (HO/Relocation-Request-ACK with HO-CMD) is sent and b) then ACM message is sent (in response to a Handover IAM for inter MSC Handovers to the target MSC) to initiate retuning. (This count indicates a successful inter-MSC handover up thru ACM sent.), for signaling-only handovers: a) an inter switch signalling MAP PrepareHO Response (HO/Relocation-Request-ACK with HO-CMD) is sent

Data Source

Call Server

Source Field

VS.RetunReqAttforIncomingInterMSCHDOs

Source Section

Handover

RetunAttforOutgInterMSCHDOs

Retuning Attempt Request for outgoing inter-MSC Handovers at Controlling MSC. This count shall be pegged at the controlling MSC when: a) an inter switch signalling MAP PrepareHO Response (HO/Relocation-Request-ACK with HO-CMD) is received and b) for circuit handover only (n/a to signaling-only type handover): then ACM message is received (in response to a Handover IAM for inter MSC Handovers to the target MSC) and c) upon the MSC sending a A-Handover-Command / Iu-Relocation-Command to the source RAN (RNC / BSS) to initiate retuning. (This count indicates a successful inter-MSC handover up thru Handover / Relocation Command sent.)

Data Source

Call Server

Source Field

VS.RetunReqAttforOutgoingInterMSCHDOs

Source Section

Handover

RetunAttForSubsIntMSCHDOsMSCa

Retuning Attempt Request for Subsequent back To MSC-A inter-MSC Handovers at Controlling MSC (after an initial handover to the non-controlling MSC-B). This count shall be pegged at the Controlling MSC when a) A-Handover-Request-ACK / Iu-Relocation-Request-ACK message is received (in response to a A-Handover-Request / Iu-Relocation-Request to the target RAN) and b) an inter switch signalling MAP PrepareSubsequentHO Response (HO/ Relocation-Request-ACK with HO CMD) is sent to initiate retuning. (This count indicates a successful subsequent inter-MSC handover back to MSC-A up thru MAP Prepare Subsequent Handover Response sent.)

Data Source

Call Server

Source Field

VS.RetunReqAttForSubsInterMSCHDOsMSCa

Source Section

Handover

© Copyright IBM Corp. 1999, 2009. All rights reserved.

RetunAttForSubsIntMSCHDOsMSCc

Retuning Attempt Request for Subsequent To MSC-C Inter-MSC Handovers at Controlling MSC (after an initial handover to the non-controlling MSC-B). This count shall be pegged at the Controlling MSC when a) an inter switch signalling MAP PrepareHO Response (HO/ Relocation-Request-ACK with HO-CMD) is received and b) then ACM message is received (in response to a Handover IAM for inter MSC Handovers to the target MSC) and c) an inter switch signalling MAP PrepareSubsequentHO Response (HO/Relocation-Request-ACK with HO-CMD) is sent to initiate retuning. (This count indicates a successful subsequent inter-MSC handover to MSC-C up thru MAP Prepare Subsequent Handover Response sent.)

Data Source

Call Server

Source Field

VS.RetunReqAttForSubsInterMSCHDOsMSCc

Source Section

Handover

RetunReqAttforIntraMSCHDOs

Retuning Attempt for intra-MSC Handovers. This count shall be pegged at the controlling/non-controlling MSC when a) an intra switch signalling A-Handover-Request-ACK / Iu-Relocation-Request-ACK message is received (in response to a A-Handover-Request / Iu-Relocation-Request to the target RAN) and b) upon the MSC sending a A-Handover-Command / Iu-Relocation-Command to the source RNC / BSS to initiate retuning. (This count indicates a successful intra-MSC handover up thru Handover / Relocation Command sent.)

Data Source

Call Server

Source Field

VS.RetunReqAttforIntraMSCHDOs

Source Section

Handover

succIncomingExternalIntraMSCHDOs

Successful incoming External intra-MSC Handovers

Data Source

Call Server

Source Field

succIncomingExternalIntraMSCHDOs

Source Section

MSC HandOver (HDO)

succIncomingInterMSCHDOS

Successful incoming inter-MSC Handovers

Data Source

Call Server

Source Field

succIncomingInterMSCHDOS

Source Section

MSC HandOver (HDO)

succOutgoingExternalIntraMSCHDOs

Successful outgoing External intra-MSC Handovers

Data Source

Call Server

Source Field

succOutgoingExternalIntraMSCHDOs

Source Section

MSC HandOver (HDO)

succOutgoingInterMSCHDOs

Successful outgoing inter-MSC Handovers

Data Source

Call Server

© Copyright IBM Corp. 1999, 2009. All rights reserved.

Source Field

succOutgoingInterMSCHDOs

Source Section

MSC HandOver (HDO)

succSubsequentInterMSCHDOsMSCa

Successful subsequent inter-MSC Handovers (back to MSCa)

Data Source

Call Server

Source Field

succSubsequentInterMSCHDOsMSCa

Source Section

MSC HandOver (HDO)

succSubsequentInterMSCHDOsMSCc

Successful subsequent inter-MSC Handovers (to MSCc)

Data Source

Call Server

Source Field

succSubsequentInterMSCHDOsMSCc

Source Section

MSC HandOver (HDO)

T_LAC

Target LAC

Data Source

Call Server

Source Field

T_LACID

Source Section

measObjLdn

T_PLMN

Target PLMN

Data Source

Call Server

Source Field

T_PLMN

Source Section

measObjLdn

TargetCELLorRNC

Target CELL or RNC

Data Source

Call Server

Source Field

T_RNCID or T_CellID

Source Section

measObjLdn

TCAP_SSN Primitive Calculations

The following is a list of primitive calculations for the TCAP_SSN entity.

GRAPHmultiLineSeparator

Special Control Field for Multi-Line Graphs

Calculation

""

NUMDAYS

of days in Report

© Copyright IBM Corp. 1999, 2009. All rights reserved.

Calculation

```
DAYSINREPORT()
```

NUMHOURS

of hours in Summation Data

TCAP_SSN Peg Counts

The following is a list of peg counts for the TCAP_SSN entity.

TCprotErrP_abortBadFrmtTP

Transaction Capabilities (TC) protocol errors detected in transaction portion (abort received) - with P-abort cause: Badly Formatted TP. Not pegged for abort sent.

Data Source

Call Server

Source Field

VS.TCprotErrP_abortBadFrmtTP

Source Section

TCAP Meassages

TCprotErrP_abortIncorTP

Transaction Capabilities (TC) protocol errors detected in transaction portion (abort received) - with P-abort cause: Incorrect TP. Not pegged for abort sent.

Data Source

Call Server

Source Field

VS.TCprotErrP_abortIncorTP

Source Section

TCAP Meassages

TCprotErrP_abortRscLmt

Transaction Capabilities (TC) protocol errors detected in transaction portion (abort received) - with P-abort cause: resource limitation.

Data Source

Call Server

Source Field

VS.TCprotErrP_abortRscLmt

Source Section

TCAP Meassages

TCprotErrP_abortUnrecMsgType

Transaction Capabilities (TC) protocol errors detected in transaction portion (abort received) - with P-abort cause: Unrecognized Message Type. Not pegged for abort sent.

Data Source

Call Server

Source Field

VS.TCprotErrP_abortUnrecMsgType

Source Section

TCAP Meassages

TCprotErrP_abortUnrecTID

Transaction Capabilities (TC) protocol errors detected in transaction portion (abort received) - with P-abort cause: unrecognized Transaction ID (TID). Not pegged for abort sent.

Data Source

Call Server

Source Field

VS.TCprotErrP_abortUnrecTID

Source Section

TCAP Meassages

TimerType Primitive Calculations

The following is a list of primitive calculations for the TimerType entity.

© Copyright IBM Corp. 1999, 2009. All rights reserved.

GRAPHmultiLineSeparator

Special Control Field for Multi-Line Graphs

Calculation

```
""
```

NUMDAYS

of days in Report

Calculation

```
DAYSINREPORT()
```

NUMHOURS

of hours in Summation Data

TimerType Peg Counts

The following is a list of peg counts for the TimerType entity.

SIPTimerExp

Pegged for each SIP timer expiration that results in retransmission or the call failing.

Data Source

Call Server

Source Field

VS.SIPTimerExp

Source Section

SIP Msgs per Timer

UMRF Primitive Calculations

The following is a list of primitive calculations for the UMRF entity.

GRAPHmultiLineSeparator

Special Control Field for Multi-Line Graphs

Calculation

```
""
```

NUMDAYS

of days in Report

Calculation

```
DAYSINREPORT()
```

NUMHOURS

of hours in Summation Data

Calculation

UMRF Peg Counts

The following is a list of peg counts for the UMRF entity.

Data_Interval

Data interval for the Call Server data collection in seconds. It is taken from "duration" value of the relevant <granPeriod> tag in the Call Server XML data file.

Data Source

Call Server

Source Field

<granPeriod> tag "duration"

SIPINFOSentByUMRF

Total number of SIP INFO requests sent by the UAC-MRF.. This count shall be pegged at the UAC-MRF component on the IMS Server whenever a SIP INFO request is sent to the MRS in order to provide announcements or perform prompt & collect

Data Source

Call Server

Source Field

VS.SIPINFOSentByUMRF

Source Section

UMRF

© Copyright IBM Corp. 1999, 2009. All rights reserved.

SIPINFOsuccUMRF

Total number of SIP INFO requests considered to be successful by the UAC-MRF. This count shall be pegged at the UAC-MRF component on the IMS Server whenever an INFO message containing a 200 OK response is received for an INFO request sent to the MRS in order to provide announcements or perform prompt & collect

Data Source

Call Server

Source Field

VS.SIPINFOsuccUMRF

Source Section

UMRF

SIPINVITESentByUMRF

Total number of SIP INVITE requests sent by the UAC-MRF. This count shall be pegged at the UAC-MRF component on the IMS Server whenever a SIP INVITE message is sent to the MRS in order to setup conference circuits, provide announcements or perform prompt & collect. This count shall not be pegged when the INVITE is being re-transmitted.

Data Source

Call Server

Source Field

VS.SIPINVITESentByUMRF

Source Section

UMRF

SIPINVITEsuccUMRF

Total number of SIP INVITE requests that are successfully acknowledged at the UAC-MRF. This count shall be pegged at the UAC-MRF component on the IMS Server whenever a SIP 200 OK response is received for an INVITE message sent to the MRS in order to setup conference circuits, provide announcements or perform prompt & collect.

Data Source

Call Server

Source Field

VS.SIPINVITEsuccUMRF

Source Section

UMRF

UMTS_Target Primitive Calculations

The following is a list of primitive calculations for the UMTS_Target entity.

GRAPHmultiLineSeparator

Special Control Field for Multi-Line Graphs

Calculation

```
""
```

NUMDAYS

of days in Report

Calculation

```
DAYSINREPORT()
```

NUMHOURS

of hours in Summation Data

Calculation

UMTS_Target Peg Counts

The following is a list of peg counts for the UMTS_Target entity.

attOutgoingInterMSCHDOs

Counter moved to "T_CELL_RNC" entity fr 4.1.7.0.0. Attempted outgoing inter-MSC Handovers

Data Source

Call Server

© Copyright IBM Corp. 1999, 2009. All rights reserved.

Source Field

attOutgoingInterMSCHDOs

Source Section

MSC HandOver (HDO) (UMTS) per Target (UMTS)

Data_Interval

Data interval for the Call Server data collection in seconds. It is taken from "duration" value of the relevant <granPeriod> tag in the Call Server XML data file.

Data Source

Call Server

Source Field

<granPeriod> tag "duration"

succOutgoingInterMSCHDOs

Counter moved to "T_CELL_RNC" entity fr 4.1.7.0.0. Successful outgoing inter-MSC Handovers

Data Source

Call Server

Source Field

succOutgoingInterMSCHDOs

Source Section

MSC HandOver (HDO) (UMTS) per Target (UMTS)

VM Primitive Calculations

The following is a list of primitive calculations for the VM entity.

GRAPHmultiLineSeparator

Special Control Field for Multi-Line Graphs

Calculation

""

NUMDAYS

of days in Report

Calculation

```
DAYSINREPORT()
```

NUMHOURS

of hours in Summation Data

VM Peg Counts

The following is a list of peg counts for the VM entity.

Act2StbyVMStateChange

This count is pegged when a diskfull blade does a switchover from the active Virtual Machine (VM) state to the standby VM state.

Data Source

Call Server

Source Field

VS.Act2StbyVMStateChange

Source Section

Virtual Machine

Act2UnavailVMStateChange

This count is pegged when a diskfull blade does a switchover from the active Virtual Machine (VM) state to the unavailable VM state.

Data Source

Call Server

Source Field

VS.Act2UnavailVMStateChange

Source Section

Virtual Machine

© Copyright IBM Corp. 1999, 2009. All rights reserved.

Other2UnavailVMStateChange

This count is pegged when a diskfull blade does a switchover from any non-active or non-standby Virtual Machine (VM) state to the unavailable VM state.

Data Source

Call Server

Source Field

VS.Other2UnavailVMStateChange

Source Section

Virtual Machine

Stby2ActVMStateChange

This count is pegged when a diskfull blade does a switchover from the standby Virtual Machine (VM) state to the active VM state.

Data Source

Call Server

Source Field

VS.Stby2ActVMStateChange

Source Section

Virtual Machine

Stby2UnavailVMStateChange

Pegged when a diskfull blade does a switchover from the standby Virtual Machine (VM) state to the unavailable VM state.

Data Source

Call Server

Source Field

VS.Stby2UnavailVMStateChange

Source Section

Virtual Machine

© Copyright IBM Corp. 1999, 2009. All rights reserved.

5 RNC Traffic Entities

The following figure shows the Prospect reporting hierarchy for RNC traffic entities.

Figure 4: Reporting Hierarchy

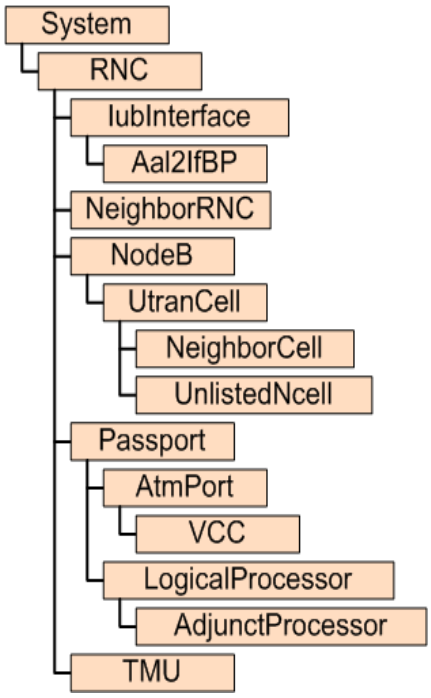

Updated: 2009-06-23

© Copyright IBM Corp. 1999, 2009. All rights reserved.

6 RNC Traffic Fields

The following is a list of available RNC Traffic performance data fields.

Aal2IfBP Primitive Calculations

The following is a list of primitive calculations for the Aal2IfBP entity.

GRAPHmultiLineSeparator

Special Control Field for Multi-Line Graphs

Calculation

```
""
```

NUMDAYS

of days in Report

Calculation

```
DAYSINREPORT()
```

NUMHOURS

of hours in Summation Data

Calculation

Aal2IfBP Peg Counts

The following is a list of peg counts for the Aal2IfBP entity.

DistIubLoadAal2IfBandWidth0to20

Number of seconds per range of IuB load per bandwidth pool based on real time traffic with granularity of 10 second. (BandWidth0to20)

Data Source

RNC C-Node

Source Field

VS.DistIubLoadAal2If.BandWidth0to20

Source Section

Aal2IfBP

DistIubLoadAal2IfBandWidth20to40

Number of seconds per range of IuB load per bandwidth pool based on real time traffic with granularity of 10 second. (BandWidth20to40)

Data Source

RNC C-Node

Source Field

VS.DistIubLoadAal2If.BandWidth20to40

Source Section

Aal2IfBP

DistIubLoadAal2IfBandWidth40to60

Number of seconds per range of IuB load per bandwidth pool based on real time traffic with granularity of 10 second. (BandWidth40to60)

Data Source

RNC C-Node

Source Field

VS.DistIubLoadAal2If.BandWidth40to60

Source Section

Aal2IfBP

DistIubLoadAal2IfBandWidth60to80

Number of seconds per range of IuB load per bandwidth pool based on real time traffic with granularity of 10 second. (BandWidth60to80)

Data Source

RNC C-Node

Source Field

VS.DistIubLoadAal2If.BandWidth60to80

Source Section

Aal2IfBP

DistIubLoadAal2IfBandWidth80to100

Number of seconds per range of IuB load per bandwidth pool based on real time traffic with granularity of 10 second. (BandWidth80to100)

Data Source

RNC C-Node

Source Field

VS.DistIubLoadAal2If.BandWidth80to100

Source Section

Aal2IfBP

DlWatermarkEbrAal2IfQoS0Avg

Watermark of allocated downlink EBR during the CAC (reported by TRM) expressed in percentage of the total bandwidth pool capacity. (Avg)

Data Source

RNC C-Node

Source Field

VS.DlWatermarkEbrAal2If.QoS0.Avg

Source Section

Aal2IfBP

DlWatermarkEbrAal2IfQoS0Cum

Watermark of allocated downlink EBR during the CAC (reported by TRM) expressed in percentage of the total bandwidth pool capacity. (Cum)

Data Source

RNC C-Node

Source Field

VS.DlWatermarkEbrAal2If.QoS0.Cum

Source Section

Aal2IfBP

DlWatermarkEbrAal2IfQoS0Max

Watermark of allocated downlink EBR during the CAC (reported by TRM) expressed in percentage of the total bandwidth pool capacity. (Max)

Data Source

RNC C-Node

Source Field

VS.DlWatermarkEbrAal2If.QoS0.Max

Source Section

Aal2IfBP

DlWatermarkEbrAal2IfQoS0Min

Watermark of allocated downlink EBR during the CAC (reported by TRM) expressed in percentage of the total bandwidth pool capacity. (Min)

Data Source

RNC C-Node

Source Field

VS.DlWatermarkEbrAal2If.QoS0.Min

Source Section

Aal2IfBP

DlWatermarkEbrAal2IfQoS0NbEvt

Watermark of allocated downlink EBR during the CAC (reported by TRM) expressed in percentage of the total bandwidth pool capacity. (NbEvt)

Data Source

RNC C-Node

Source Field

VS.DlWatermarkEbrAal2If.QoS0.NbEvt

Source Section

Aal2IfBP

DlWatermarkEbrAal2IfQoS1Avg

Watermark of allocated downlink EBR during the CAC (reported by TRM) expressed in percentage of the total bandwidth pool capacity. (Avg)

Data Source

RNC C-Node

Source Field

VS.DlWatermarkEbrAal2If.QoS1.Avg

Source Section

Aal2IfBP

DlWatermarkEbrAal2IfQoS1Cum

Watermark of allocated downlink EBR during the CAC (reported by TRM) expressed in percentage of the total bandwidth pool capacity. (Cum)

Data Source

RNC C-Node

Source Field

VS.DlWatermarkEbrAal2If.QoS1.Cum

Source Section

Aal2IfBP

DlWatermarkEbrAal2IfQoS1Max

Watermark of allocated downlink EBR during the CAC (reported by TRM) expressed in percentage of the total bandwidth pool capacity. (Max)

Data Source

RNC C-Node

Source Field

VS.DlWatermarkEbrAal2If.QoS1.Max

Source Section

Aal2IfBP

DlWatermarkEbrAal2IfQoS1Min

Watermark of allocated downlink EBR during the CAC (reported by TRM) expressed in percentage of the total bandwidth pool capacity. (Min)

Data Source

RNC C-Node

Source Field

VS.DlWatermarkEbrAal2If.QoS1.Min

Source Section

Aal2IfBP

DlWatermarkEbrAal2IfQoS1NbEvt

Watermark of allocated downlink EBR during the CAC (reported by TRM) expressed in percentage of the total bandwidth pool capacity. (NbEvt)

Data Source

RNC C-Node

Source Field

VS.DlWatermarkEbrAal2If.QoS1.NbEvt

Source Section

Aal2IfBP

DlWatermarkEbrAal2IfQoS2Avg

Watermark of allocated downlink EBR during the CAC (reported by TRM) expressed in percentage of the total bandwidth pool capacity. (Avg)

Data Source

RNC C-Node

Source Field

VS.DlWatermarkEbrAal2If.QoS2.Avg

Source Section

Aal2IfBP

DlWatermarkEbrAal2IfQoS2Cum

Watermark of allocated downlink EBR during the CAC (reported by TRM) expressed in percentage of the total bandwidth pool capacity. (Cum)

Data Source

RNC C-Node

Source Field

VS.DlWatermarkEbrAal2If.QoS2.Cum

Source Section

Aal2IfBP

DlWatermarkEbrAal2IfQoS2Max

Watermark of allocated downlink EBR during the CAC (reported by TRM) expressed in percentage of the total bandwidth pool capacity. (Max)

Data Source

RNC C-Node

Source Field

VS.DlWatermarkEbrAal2If.QoS2.Max

Source Section

Aal2IfBP

DlWatermarkEbrAal2IfQoS2Min

Watermark of allocated downlink EBR during the CAC (reported by TRM) expressed in percentage of the total bandwidth pool capacity. (Min)

Data Source

RNC C-Node

Source Field

VS.DlWatermarkEbrAal2If.QoS2.Min

Source Section

Aal2IfBP

DlWatermarkEbrAal2IfQoS2NbEvt

Watermark of allocated downlink EBR during the CAC (reported by TRM) expressed in percentage of the total bandwidth pool capacity. (NbEvt)

Data Source

RNC C-Node

Source Field

VS.DlWatermarkEbrAal2If.QoS2.NbEvt

Source Section

Aal2IfBP

DlWatermarkEbrAal2IfQoS3Avg

Watermark of allocated downlink EBR during the CAC (reported by TRM) expressed in percentage of the total bandwidth pool capacity. (Avg)

Data Source

RNC C-Node

Source Field

VS.DlWatermarkEbrAal2If.QoS3.Avg

Source Section

Aal2IfBP

DlWatermarkEbrAal2IfQoS3Cum

Watermark of allocated downlink EBR during the CAC (reported by TRM) expressed in percentage of the total bandwidth pool capacity. (Cum)

Data Source

RNC C-Node

Source Field

VS.DlWatermarkEbrAal2If.QoS3.Cum

Source Section

Aal2IfBP

DlWatermarkEbrAal2IfQoS3Max

Watermark of allocated downlink EBR during the CAC (reported by TRM) expressed in percentage of the total bandwidth pool capacity. (Max)

Data Source

RNC C-Node

Source Field

VS.DlWatermarkEbrAal2If.QoS3.Max

Source Section

Aal2IfBP

DlWatermarkEbrAal2IfQoS3Min

Watermark of allocated downlink EBR during the CAC (reported by TRM) expressed in percentage of the total bandwidth pool capacity. (Min)

Data Source

RNC C-Node

Source Field

VS.DlWatermarkEbrAal2If.QoS3.Min

Source Section

Aal2IfBP

DlWatermarkEbrAal2IfQoS3NbEvt

Watermark of allocated downlink EBR during the CAC (reported by TRM) expressed in percentage of the total bandwidth pool capacity. (NbEvt)

Data Source

RNC C-Node

Source Field

VS.DlWatermarkEbrAal2If.QoS3.NbEvt

Source Section

Aal2IfBP

EdchFrmWithDelayBuildupAal2If

Number of frames received on a Aal2If Bandwidth Pool with a delay higher than the configured threshold. (EdchFrmWithDelayBuildupAal2If)

Data Source

RNC C-Node

Source Field

VS.EdchFrmWithDelayBuildupAal2If

Source Section

Aal2IfBP

EdchFrmWithFrmLossAal2If

Number of frames loss on a Aal2If Bandwidth Pool (EdchFrmWithFrmLossAal2If)

Data Source

RNC C-Node

Source Field

VS.EdchFrmWithFrmLossAal2If

Source Section

Aal2IfBP

EdchTtlFrmRcvdAal2If

Number of frames received on a Aal2If Bandwidth Pool (EdchTtlFrmRcvdAal2If)

Data Source

RNC C-Node

Source Field

VS.EdchTtlFrmRcvdAal2If

Source Section

Aal2IfBP

IubDlTrfcBlkTmCntAal2IfQoS0

Number of milliseconds the Iub is blocked by Xoff mechanism on the Aal2If bandwidth pool. (QoS0)

Data Source

RNC C-Node

Source Field

VS.IubDlTrfcBlkTmCntAal2If.QoS0

Source Section

Aal2IfBP

IubDlTrfcBlkTmCntAal2IfQoS1

Number of milliseconds the Iub is blocked by Xoff mechanism on the Aal2If bandwidth pool. (QoS1)

Data Source

RNC C-Node

Source Field

VS.IubDlTrfcBlkTmCntAal2If.QoS1

Source Section

Aal2IfBP

IubDlTrfcBlkTmCntAal2IfQoS2

Number of milliseconds the Iub is blocked by Xoff mechanism on the Aal2If bandwidth pool. (QoS2)

Data Source

RNC C-Node

Source Field

VS.IubDlTrfcBlkTmCntAal2If.QoS2

Source Section

Aal2IfBP

IubDlTrfcBlkTmCntAal2IfQoS3

Number of milliseconds the Iub is blocked by Xoff mechanism on the Aal2If bandwidth pool. (QoS3)

Data Source

RNC C-Node

Source Field

VS.IubDlTrfcBlkTmCntAal2If.QoS3

Source Section

Aal2IfBP

IubDlTrfcRestrTmCntAal2IfQoS0

Number of milliseconds the Iub is restricted to GBR/minBR by Xoff mechanism on the Aal2If bandwidth pool. (QoS0)

Data Source

RNC C-Node

Source Field

VS.IubDlTrfcRestrTmCntAal2If.QoS0

Source Section

Aal2IfBP

IubDlTrfcRestrTmCntAal2IfQoS1

Number of milliseconds the Iub is restricted to GBR/minBR by Xoff mechanism on the Aal2If bandwidth pool. (QoS1)

Data Source

RNC C-Node

Source Field

VS.IubDlTrfcRestrTmCntAal2If.QoS1

Source Section

Aal2IfBP

IubDlTrfcRestrTmCntAal2IfQoS2

Number of milliseconds the Iub is restricted to GBR/minBR by Xoff mechanism on the Aal2If bandwidth pool. (QoS2)

Data Source

RNC C-Node

Source Field

VS.IubDlTrfcRestrTmCntAal2If.QoS2

Source Section

Aal2IfBP

IubDlTrfcRestrTmCntAal2IfQoS3

Number of milliseconds the Iub is restricted to GBR/minBR by Xoff mechanism on the Aal2If bandwidth pool. (QoS3)

Data Source

RNC C-Node

Source Field

VS.IubDlTrfcRestrTmCntAal2If.QoS3

Source Section

Aal2IfBP

IubUlXoFrmCntAal2IfQoS0

Number of UL Xoff control frames broadcasted to application layer, applies to both R99 and HSDPA (QoS0)

Data Source

RNC C-Node

Source Field

VS.IubUlXoFrmCntAal2If.QoS0

Source Section

Aal2IfBP

IubUlXoFrmCntAal2IfQoS1

Number of UL Xoff control frames broadcasted to application layer, applies to both R99 and HSDPA (QoS1)

Data Source

RNC C-Node

Source Field

VS.IubUlXoFrmCntAal2If.QoS1

Source Section

Aal2IfBP

IubUlXoFrmCntAal2IfQoS2

Number of UL Xoff control frames broadcasted to application layer, applies to both R99 and HSDPA (QoS2)

Data Source

RNC C-Node

Source Field

VS.IubUlXoFrmCntAal2If.QoS2

Source Section

Aal2IfBP

IubUlXoFrmCntAal2IfQoS3

Number of UL Xoff control frames broadcasted to application layer, applies to both R99 and HSDPA (QoS3)

Data Source

RNC C-Node

Source Field

VS.IubUlXoFrmCntAal2If.QoS3

Source Section

Aal2IfBP

UlWatermarkEbrAal2IfQoS0Avg

Watermark of allocated uplink EBR during the CAC (reported by TRM) expressed in percentage of the total bandwidth pool capacity. (Aal2IfQoS0Avg)

Data Source

RNC C-Node

Source Field

VS.UlWatermarkEbrAal2If.QoS0.Avg

Source Section

Aal2IfBP

UlWatermarkEbrAal2IfQoS0Cum

Watermark of allocated uplink EBR during the CAC (reported by TRM) expressed in percentage of the total bandwidth pool capacity. (Aal2IfQoS0Cum)

Data Source

RNC C-Node

Source Field

VS.UlWatermarkEbrAal2If.QoS0.Cum

Source Section

Aal2IfBP

UlWatermarkEbrAal2IfQoS0Max

Watermark of allocated uplink EBR during the CAC (reported by TRM) expressed in percentage of the total bandwidth pool capacity. (Aal2IfQoS0Max)

Data Source

RNC C-Node

Source Field

VS.UlWatermarkEbrAal2If.QoS0.Max

Source Section

Aal2IfBP

UlWatermarkEbrAal2IfQoS0Min

Watermark of allocated uplink EBR during the CAC (reported by TRM) expressed in percentage of the total bandwidth pool capacity. (Aal2IfQoS0Min)

Data Source

RNC C-Node

Source Field

VS.UlWatermarkEbrAal2If.QoS0.Min

Source Section

Aal2IfBP

UlWatermarkEbrAal2IfQoS0NbEvt

Watermark of allocated uplink EBR during the CAC (reported by TRM) expressed in percentage of the total bandwidth pool capacity. (Aal2IfQoS0NbEvt)

Data Source

RNC C-Node

Source Field

VS.UlWatermarkEbrAal2If.QoS0.NbEvt

Source Section

Aal2IfBP

UlWatermarkEbrAal2IfQoS1Avg

Watermark of allocated uplink EBR during the CAC (reported by TRM) expressed in percentage of the total bandwidth pool capacity. (Aal2IfQoS1Avg)

Data Source

RNC C-Node

Source Field

VS.UlWatermarkEbrAal2If.QoS1.Avg

Source Section

Aal2IfBP

UlWatermarkEbrAal2IfQoS1Cum

Watermark of allocated uplink EBR during the CAC (reported by TRM) expressed in percentage of the total bandwidth pool capacity. (Aal2IfQoS1Cum)

Data Source

RNC C-Node

Source Field

VS.UlWatermarkEbrAal2If.QoS1.Cum

Source Section

Aal2IfBP

UlWatermarkEbrAal2IfQoS1Max

Watermark of allocated uplink EBR during the CAC (reported by TRM) expressed in percentage of the total bandwidth pool capacity. (Aal2IfQoS1Max)

Data Source

RNC C-Node

Source Field

VS.UlWatermarkEbrAal2If.QoS1.Max

Source Section

Aal2IfBP

UlWatermarkEbrAal2IfQoS1Min

Watermark of allocated uplink EBR during the CAC (reported by TRM) expressed in percentage of the total bandwidth pool capacity. (Aal2IfQoS1Min)

Data Source

RNC C-Node

Source Field

VS.UlWatermarkEbrAal2If.QoS1.Min

Source Section

Aal2IfBP

UlWatermarkEbrAal2IfQoS1NbEvt

Watermark of allocated uplink EBR during the CAC (reported by TRM) expressed in percentage of the total bandwidth pool capacity. (Aal2IfQoS1NbEvt)

Data Source

RNC C-Node

Source Field

VS.UlWatermarkEbrAal2If.QoS1.NbEvt

Source Section

Aal2IfBP

UlWatermarkEbrAal2IfQoS2Avg

Watermark of allocated uplink EBR during the CAC (reported by TRM) expressed in percentage of the total bandwidth pool capacity. (Aal2IfQoS2Avg)

Data Source

RNC C-Node

Source Field

VS.UlWatermarkEbrAal2If.QoS2.Avg

Source Section

Aal2IfBP

UlWatermarkEbrAal2IfQoS2Cum

Watermark of allocated uplink EBR during the CAC (reported by TRM) expressed in percentage of the total bandwidth pool capacity. (Aal2IfQoS2Cum)

Data Source

RNC C-Node

Source Field

VS.UlWatermarkEbrAal2If.QoS2.Cum

Source Section

Aal2IfBP

UlWatermarkEbrAal2IfQoS2Max

Watermark of allocated uplink EBR during the CAC (reported by TRM) expressed in percentage of the total bandwidth pool capacity. (Aal2IfQoS2Max)

Data Source

RNC C-Node

Source Field

VS.UlWatermarkEbrAal2If.QoS2.Max

Source Section

Aal2IfBP

UlWatermarkEbrAal2IfQoS2Min

Watermark of allocated uplink EBR during the CAC (reported by TRM) expressed in percentage of the total bandwidth pool capacity. (Aal2IfQoS2Min)

Data Source

RNC C-Node

Source Field

VS.UlWatermarkEbrAal2If.QoS2.Min

Source Section

Aal2IfBP

UlWatermarkEbrAal2IfQoS2NbEvt

Watermark of allocated uplink EBR during the CAC (reported by TRM) expressed in percentage of the total bandwidth pool capacity. (Aal2IfQoS2NbEvt)

Data Source

RNC C-Node

Source Field

VS.UlWatermarkEbrAal2If.QoS2.NbEvt

Source Section

Aal2IfBP

UlWatermarkEbrAal2IfQoS3Avg

Watermark of allocated uplink EBR during the CAC (reported by TRM) expressed in percentage of the total bandwidth pool capacity. (Aal2IfQoS3Avg)

Data Source

RNC C-Node

Source Field

VS.UlWatermarkEbrAal2If.QoS3.Avg

Source Section

Aal2IfBP

UlWatermarkEbrAal2IfQoS3Cum

Watermark of allocated uplink EBR during the CAC (reported by TRM) expressed in percentage of the total bandwidth pool capacity. (Aal2IfQoS3Cum)

Data Source

RNC C-Node

Source Field

VS.UlWatermarkEbrAal2If.QoS3.Cum

Source Section

Aal2IfBP

UlWatermarkEbrAal2IfQoS3Max

Watermark of allocated uplink EBR during the CAC (reported by TRM) expressed in percentage of the total bandwidth pool capacity. (Aal2IfQoS3Max)

Data Source

RNC C-Node

Source Field

VS.UlWatermarkEbrAal2If.QoS3.Max

Source Section

Aal2IfBP

UlWatermarkEbrAal2IfQoS3Min

Watermark of allocated uplink EBR during the CAC (reported by TRM) expressed in percentage of the total bandwidth pool capacity. (Aal2IfQoS3Min)

Data Source

RNC C-Node

Source Field

VS.UlWatermarkEbrAal2If.QoS3.Min

Source Section

Aal2IfBP

UlWatermarkEbrAal2IfQoS3NbEvt

Watermark of allocated uplink EBR during the CAC (reported by TRM) expressed in percentage of the total bandwidth pool capacity. (Aal2IfQoS3NbEvt)

Data Source

RNC C-Node

Source Field

VS.UlWatermarkEbrAal2If.QoS3.NbEvt

Source Section

Aal2IfBP

AdjunctProcessor Primitive Calculations

The following is a list of primitive calculations for the AdjunctProcessor entity.

GRAPHmultiLineSeparator

Special Control Field for Multi-Line Graphs

Calculation

```
""
```

NUMDAYS

of days in Report

Calculation

```
DAYSINREPORT()
```

NUMHOURS

of hours in Summation Data

Calculation

AdjunctProcessor Peg Counts

The following is a list of peg counts for the AdjunctProcessor entity.

ApCpuUtilizationAvg

This attribute indicates the processor average CPU utilization over the collection interval. This is calculated using data sampled every 100 milliseconds.

Data Source

RNC Interface Node Observations

Source Field

VS.ApCpuUtilizationAvg

Source Section

AdjunctProcessor

ApCpuUtilizationHistogramEQ100

This attribute indicates a histogram of Adjunct Processor's CPU utilization. Every 100 milliseconds, the average CPU utilization for the previous 100 millisecond interval is used to select a bin from the vector and the bin is incremented. CPU utilization = 100%.

Data Source

RNC Interface Node Observations

Source Field

VS.ApCpuUtilizationHistogram.EQ100

Source Section

AdjunctProcessor

ApCpuUtilizationHistogramLT050

This attribute indicates a histogram of Adjunct Processor's CPU utilization. Every 100 milliseconds, the average CPU utilization for the previous 100 millisecond interval is used to select a bin from the vector and the bin is incremented. CPU utilization from 0% to less than 50%.

Data Source

RNC Interface Node Observations

Source Field

VS.ApCpuUtilizationHistogram.LT050

Source Section

AdjunctProcessor

ApCpuUtilizationHistogramLT060

This attribute indicates a histogram of Adjunct Processor's CPU utilization. Every 100 milliseconds, the average CPU utilization for the previous 100 millisecond interval is used to select a bin from the vector and the bin is incremented. CPU utilization from 50% to less than 60%.

Data Source

RNC Interface Node Observations

Source Field

VS.ApCpuUtilizationHistogram.LT060

Source Section

AdjunctProcessor

ApCpuUtilizationHistogramLT070

This attribute indicates a histogram of Adjunct Processor's CPU utilization. Every 100 milliseconds, the average CPU utilization for the previous 100 millisecond interval is used to select a bin from the vector and the bin is incremented. CPU utilization from 60% to less than 70%.

Data Source

RNC Interface Node Observations

Source Field

VS.ApCpuUtilizationHistogram.LT070

Source Section

AdjunctProcessor

ApCpuUtilizationHistogramLT080

This attribute indicates a histogram of Adjunct Processor's CPU utilization. Every 100 milliseconds, the average CPU utilization for the previous 100 millisecond interval is used to select a bin from the vector and the bin is incremented. CPU utilization from 70% to less than 80%.

Data Source

RNC Interface Node Observations

Source Field

VS.ApCpuUtilizationHistogram.LT080

Source Section

AdjunctProcessor

ApCpuUtilizationHistogramLT085

This attribute indicates a histogram of Adjunct Processor's CPU utilization. Every 100 milliseconds, the average CPU utilization for the previous 100 millisecond interval is used to select a bin from the vector and the bin is incremented. CPU utilization from 80% to less than 85%.

Data Source

RNC Interface Node Observations

Source Field

VS.ApCpuUtilizationHistogram.LT085

Source Section

AdjunctProcessor

ApCpuUtilizationHistogramLT090

This attribute indicates a histogram of Adjunct Processor's CPU utilization. Every 100 milliseconds, the average CPU utilization for the previous 100 millisecond interval is used to select a bin from the vector and the bin is incremented. CPU utilization from 85% to less than 90%.

Data Source

RNC Interface Node Observations

Source Field

VS.ApCpuUtilizationHistogram.LT090

Source Section

AdjunctProcessor

ApCpuUtilizationHistogramLT095

This attribute indicates a histogram of Adjunct Processor's CPU utilization. Every 100 milliseconds, the average CPU utilization for the previous 100 millisecond interval is used to select a bin from the vector and the bin is incremented. CPU utilization from 90% to less than 95%.

Data Source

RNC Interface Node Observations

Source Field

VS.ApCpuUtilizationHistogram.LT095

Source Section

AdjunctProcessor

ApCpuUtilizationHistogramLT100

This attribute indicates a histogram of Adjunct Processor's CPU utilization. Every 100 milliseconds, the average CPU utilization for the previous 100 millisecond interval is used to

select a bin from the vector and the bin is incremented. CPU utilization from 95% to less than 100%.

Data Source

RNC Interface Node Observations

Source Field

VS.ApCpuUtilizationHistogram.LT100

Source Section

AdjunctProcessor

ApLocalMsgBlockCapacity

This attribute indicates the Adjunct Processor's local message block memory capacity. These message blocks are used for local messaging on the card.

Data Source

RNC Interface Node Observations

Source Field

VS.ApLocalMsgBlockCapacity

Source Section

AdjunctProcessor

ApLocalMsgBlockUsageAvg

This attribute indicates the Adjunct Processor's average memory utilization of message blocks used for local messaging, calculated over the collection interval using the data sampled every second.

Data Source

RNC Interface Node Observations

Source Field

VS.ApLocalMsgBlockUsageAvg

Source Section

AdjunctProcessor

ApLocalMsgBlockUsageAvgMax

This attribute indicates the Adjunct Processor's maximum memory utilization of message blocks used for local messaging, calculated over the collection interval using data sampled every second.

Data Source

RNC Interface Node Observations

Source Field

VS.ApLocalMsgBlockUsageAvgMax

Source Section

AdjunctProcessor

ApLocalMsgBlockUsageAvgMin

This attribute indicates the Adjunct Processor's minimum memory utilization of message blocks used for local messaging, calculated over the collection interval using data sampled every second.

Data Source

RNC Interface Node Observations

Source Field

VS.ApLocalMsgBlockUsageAvgMin

Source Section

AdjunctProcessor

ApMemoryCapacity

This attribute indicates the total amount of memory present on the Adjunct Processor.

Data Source

RNC Interface Node Observations

Source Field

VS.ApMemoryCapacity

Source Section

AdjunctProcessor

ApMemoryUsageAvgMax

This attribute indicates the Adjunct Processor's maximum memory utilization in the collection interval. This is calculated using data sampled every second.

Data Source

RNC Interface Node Observations

Source Field

VS.ApMemoryUsageAvgMax

Source Section

AdjunctProcessor

ApMemoryUsageAvgMin

This attribute indicates the Adjunct Processor's minimum memory utilization in the collection interval. This is calculated using data sampled every second.

Data Source

RNC Interface Node Observations

Source Field

VS.ApMemoryUsageAvgMin

Source Section

AdjunctProcessor

ApMemoryUtilization

This attribute indicates the processor's average memory utilization in the collection interval. This is calculated using data sampled every second.

Data Source

RNC Interface Node Observations

Source Field

VS.ApMemoryUtilization

Source Section

AdjunctProcessor

ApSharedMsgBlockCapacity

This attribute indicates the Adjunct Processor's shared message block memory capacity.

Data Source

RNC Interface Node Observations

Source Field

VS.ApSharedMsgBlockCapacity

Source Section

AdjunctProcessor

ApSharedMsgBlockUsageAvg

This attribute indicates the Adjunct processor's average shared message block memory utilization over the collection interval. This is calculated using data sampled every second.

Data Source

RNC Interface Node Observations

Source Field

VS.ApSharedMsgBlockUsageAvg

Source Section

AdjunctProcessor

ApSharedMsgBlockUsageAvgMax

This attribute indicates the Adjunct Processor's maximum shared message block memory utilization over the collection interval. This is calculated using data sampled every second.

Data Source

RNC Interface Node Observations

Source Field

VS.ApSharedMsgBlockUsageAvgMax

Source Section

AdjunctProcessor

ApSharedMsgBlockUsageAvgMin

This attribute indicates the Adjunct Processor's minimum shared message block memory utilization over the collection interval. This is calculated using data sampled every second.

Data Source

RNC Interface Node Observations

Source Field

VS.ApSharedMsgBlockUsageAvgMin

Source Section

AdjunctProcessor

AtmPort Primitive Calculations

The following is a list of primitive calculations for the AtmPort entity.

GRAPHmultiLineSeparator

Special Control Field for Multi-Line Graphs

Calculation

```
""
```

NUMDAYS

of days in Report

Calculation

```
DAYSINREPORT()
```

NUMHOURS

of hours in Summation Data

Calculation

AtmPort Peg Counts

The following is a list of peg counts for the AtmPort entity.

ActualRate

AtmIf 's actual bandwidth in cells per second. Equals provRate when no errors occur.

Data Source

RNC Interface Node Observations

Source Field

VS.ActualRate

Source Section

AtmPort

ProvRate

AtmIf s provisioned link rate in cells per second

Data Source

RNC Interface Node Observations

Source Field

VS.ProvRate

Source Section

AtmPort

RxAvgCellRate

This attribute indicates the average received cell rate (CLP=0+1) during the collection interval.

Data Source

RNC Interface Node Observations

Source Field

VS.RxAvgCellRate

Source Section

AtmPort

RxAvgCellRateAbr

This attribute indicates the average received cell rate (CLP=0+1) during the collection interval by ATM service category.

Data Source

RNC Interface Node Observations

Source Field

VS.RxAvgCellRate.Abr

Source Section

AtmPort

RxAvgCellRateCbr

This attribute indicates the average received cell rate (CLP=0+1) during the collection interval by ATM service category.

Data Source

RNC Interface Node Observations

Source Field

VS.RxAvgCellRate.Cbr

Source Section

AtmPort

RxAvgCellRateClp

This attribute indicates the average received cell rate (CLP=1) during the collection interval.

Data Source

RNC Interface Node Observations

Source Field

VS.RxAvgCellRateClp

Source Section

AtmPort

RxAvgCellRateClpAbr

This attribute indicates the average received cell rate (CLP=1) during the collection interval by ATM service category.

Data Source

RNC Interface Node Observations

Source Field

VS.RxAvgCellRateClp.Abr

Source Section

AtmPort

RxAvgCellRateClpCbr

This attribute indicates the average received cell rate (CLP=1) during the collection interval by ATM service category.

Data Source

RNC Interface Node Observations

Source Field

VS.RxAvgCellRateClp.Cbr

Source Section

AtmPort

RxAvgCellRateClpNrtvbr

This attribute indicates the average received cell rate (CLP=1) during the collection interval by ATM service category.

Data Source

RNC Interface Node Observations

Source Field

VS.RxAvgCellRateClp.Nrtvbr

Source Section

AtmPort

RxAvgCellRateClpRtvbr

This attribute indicates the average received cell rate (CLP=1) during the collection interval by ATM service category.

Data Source

RNC Interface Node Observations

Source Field

VS.RxAvgCellRateClp.Rtvbr

Source Section

AtmPort

RxAvgCellRateClpUbr

This attribute indicates the average received cell rate (CLP=1) during the collection interval by ATM service category.

Data Source

RNC Interface Node Observations

Source Field

VS.RxAvgCellRateClp.Ubr

Source Section

AtmPort

RxAvgCellRateNrtvbr

This attribute indicates the average received cell rate (CLP=0+1) during the collection interval by ATM service category.

Data Source

RNC Interface Node Observations

Source Field

VS.RxAvgCellRate.Nrtvbr

Source Section

AtmPort

RxAvgCellRateRtvbr

This attribute indicates the average received cell rate (CLP=0+1) during the collection interval by ATM service category.

Data Source

RNC Interface Node Observations

Source Field

VS.RxAvgCellRate.Rtvbr

Source Section

AtmPort

RxAvgCellRateUbr

This attribute indicates the average received cell rate (CLP=0+1) during the collection interval by ATM service category.

Data Source

RNC Interface Node Observations

Source Field

VS.RxAvgCellRate.Ubr

Source Section

AtmPort

RxCellDiscards

This attribute counts the cells (CLP=0+1) which are discarded after being received during the collection interval.

Data Source

RNC Interface Node Observations

Source Field

VS.RxCellDiscards

Source Section

AtmPort

RxCellDiscardsAbr

This attribute counts the cells (CLP=0+1) which are discarded after being received during the collection interval by ATM service category.

Data Source

RNC Interface Node Observations

Source Field

VS.RxCellDiscards.Abr

Source Section

AtmPort

RxCellDiscardsCbr

This attribute counts the cells (CLP=0+1) which are discarded after being received during the collection interval by ATM service category.

Data Source

RNC Interface Node Observations

Source Field

VS.RxCellDiscards.Cbr

Source Section

AtmPort

RxCellDiscardsClp

This attribute counts the cells (CLP=1) which are discarded after being received during the collection interval.

Data Source

RNC Interface Node Observations

Source Field

VS.RxCellDiscardsClp

Source Section

AtmPort

RxCellDiscardsClpAbr

This attribute counts the cells (CLP=1) which are discarded after being received during the collection interval by ATM service category.

Data Source

RNC Interface Node Observations

Source Field

VS.RxCellDiscardsClp.Abr

Source Section

AtmPort

RxCellDiscardsClpCbr

This attribute counts the cells (CLP=1) which are discarded after being received during the collection interval by ATM service category.

Data Source

RNC Interface Node Observations

Source Field

VS.RxCellDiscardsClp.Cbr

Source Section

AtmPort

RxCellDiscardsClpNrtvbr

This attribute counts the cells (CLP=1) which are discarded after being received during the collection interval by ATM service category.

Data Source

RNC Interface Node Observations

Source Field

VS.RxCellDiscardsClp.Nrtvbr

Source Section

AtmPort

RxCellDiscardsClpRtvbr

This attribute counts the cells (CLP=1) which are discarded after being received during the collection interval by ATM service category.

Data Source

RNC Interface Node Observations

Source Field

VS.RxCellDiscardsClp.Rtvbr

Source Section

AtmPort

RxCellDiscardsClpUbr

This attribute counts the cells (CLP=1) which are discarded after being received during the collection interval by ATM service category.

Data Source

RNC Interface Node Observations

Source Field

VS.RxCellDiscardsClp.Ubr

Source Section

AtmPort

RxCellDiscardsNrtvbr

This attribute counts the cells (CLP=0+1) which are discarded after being received during the collection interval by ATM service category.

Data Source

RNC Interface Node Observations

Source Field

VS.RxCellDiscards.Nrtvbr

Source Section

AtmPort

RxCellDiscardsRtvbr

This attribute counts the cells (CLP=0+1) which are discarded after being received during the collection interval by ATM service category.

Data Source

RNC Interface Node Observations

Source Field

VS.RxCellDiscards.Rtvbr

Source Section

AtmPort

RxCellDiscardsUbr

This attribute counts the cells (CLP=0+1) which are discarded after being received during the collection interval by ATM service category.

Data Source

RNC Interface Node Observations

Source Field

VS.RxCellDiscards.Ubr

Source Section

AtmPort

RxFrameDiscards

This attribute counts the frames (CLP=0+1) which are discarded after being received during the collection interval.

Data Source

RNC Interface Node Observations

Source Field

VS.RxFrameDiscards

Source Section

AtmPort

RxFrameDiscardsAbr

This attribute counts the frames (CLP=0+1) which are discarded after being received during the collection interval by ATM service category.

Data Source

RNC Interface Node Observations

Source Field

VS.RxFrameDiscards.Abr

Source Section

AtmPort

RxFrameDiscardsCbr

This attribute counts the frames (CLP=0+1) which are discarded after being received during the collection interval by ATM service category.

Data Source

RNC Interface Node Observations

Source Field

VS.RxFrameDiscards.Cbr

Source Section

AtmPort

RxFrameDiscardsClp

This attribute counts the frames (CLP=1) which are discarded after being received during the collection interval.

Data Source

RNC Interface Node Observations

Source Field

VS.RxFrameDiscardsClp

Source Section

AtmPort

RxFrameDiscardsClpAbr

This attribute counts the frames (CLP=1) which are discarded after being received during the collection interval by ATM service category.

Data Source

RNC Interface Node Observations

Source Field

VS.RxFrameDiscardsClp.Abr

Source Section

AtmPort

RxFrameDiscardsClpCbr

This attribute counts the frames (CLP=1) which are discarded after being received during the collection interval by ATM service category.

Data Source

RNC Interface Node Observations

Source Field

VS.RxFrameDiscardsClp.Cbr

Source Section

AtmPort

RxFrameDiscardsClpNrtvbr

This attribute counts the frames (CLP=1) which are discarded after being received during the collection interval by ATM service category.

Data Source

RNC Interface Node Observations

Source Field

VS.RxFrameDiscardsClp.Nrtvbr

Source Section

AtmPort

RxFrameDiscardsClpRtvbr

This attribute counts the frames (CLP=1) which are discarded after being received during the collection interval by ATM service category.

Data Source

RNC Interface Node Observations

Source Field

VS.RxFrameDiscardsClp.Rtvbr

Source Section

AtmPort

RxFrameDiscardsClpUbr

This attribute counts the frames (CLP=1) which are discarded after being received during the collection interval by ATM service category.

Data Source

RNC Interface Node Observations

Source Field

VS.RxFrameDiscardsClp.Ubr

Source Section

AtmPort

RxFrameDiscardsNrtvbr

This attribute counts the frames (CLP=0+1) which are discarded after being received during the collection interval by ATM service category.

Data Source

RNC Interface Node Observations

Source Field

VS.RxFrameDiscards.Nrtvbr

Source Section

AtmPort

RxFrameDiscardsRtvbr

This attribute counts the frames (CLP=0+1) which are discarded after being received during the collection interval by ATM service category.

Data Source

RNC Interface Node Observations

Source Field

VS.RxFrameDiscards.Rtvbr

Source Section

AtmPort

RxFrameDiscardsUbr

This attribute counts the frames (CLP=0+1) which are discarded after being received during the collection interval by ATM service category.

Data Source

RNC Interface Node Observations

Source Field

VS.RxFrameDiscards.Ubr

Source Section

AtmPort

RxMaxCellRate

This attribute indicates the received cell rate (CLP=0+1) during the busiest minute of the collection interval.

Data Source

RNC Interface Node Observations

Source Field

VS.RxMaxCellRate

Source Section

AtmPort

RxMaxCellRateAbr

This attribute indicates the received cell rate (CLP=0+1) during the busiest minute of the collection interval by ATM service category.

Data Source

RNC Interface Node Observations

Source Field

VS.RxMaxCellRate.Abr

Source Section

AtmPort

RxMaxCellRateCbr

This attribute indicates the received cell rate (CLP=0+1) during the busiest minute of the collection interval by ATM service category.

Data Source

RNC Interface Node Observations

Source Field

VS.RxMaxCellRate.Cbr

Source Section

AtmPort

RxMaxCellRateClp

This attribute indicates the received cell rate (CLP=1) during the busiest minute of the collection interval.

Data Source

RNC Interface Node Observations

Source Field

VS.RxMaxCellRateClp

Source Section

AtmPort

RxMaxCellRateClpAbr

This attribute indicates the received cell rate (CLP=1) during the busiest minute of the collection interval by ATM service category.

Data Source

RNC Interface Node Observations

Source Field

VS.RxMaxCellRateClp.Abr

Source Section

AtmPort

RxMaxCellRateClpCbr

This attribute indicates the received cell rate (CLP=1) during the busiest minute of the collection interval by ATM service category.

Data Source

RNC Interface Node Observations

Source Field

VS.RxMaxCellRateClp.Cbr

Source Section

AtmPort

RxMaxCellRateClpNrtvbr

This attribute indicates the received cell rate (CLP=1) during the busiest minute of the collection interval by ATM service category.

Data Source

RNC Interface Node Observations

Source Field

VS.RxMaxCellRateClp.Nrtvbr

Source Section

AtmPort

RxMaxCellRateClpRtvbr

This attribute indicates the received cell rate (CLP=1) during the busiest minute of the collection interval by ATM service category.

Data Source

RNC Interface Node Observations

Source Field

VS.RxMaxCellRateClp.Rtvbr

Source Section

AtmPort

RxMaxCellRateClpUbr

This attribute indicates the received cell rate (CLP=1) during the busiest minute of the collection interval by ATM service category.

Data Source

RNC Interface Node Observations

Source Field

VS.RxMaxCellRateClp.Ubr

Source Section

AtmPort

RxMaxCellRateNrtvbr

This attribute indicates the received cell rate (CLP=0+1) during the busiest minute of the collection interval by ATM service category.

Data Source

RNC Interface Node Observations

Source Field

VS.RxMaxCellRate.Nrtvbr

Source Section

AtmPort

RxMaxCellRateRtvbr

This attribute indicates the received cell rate (CLP=0+1) during the busiest minute of the collection interval by ATM service category.

Data Source

RNC Interface Node Observations

Source Field

VS.RxMaxCellRate.Rtvbr

Source Section

AtmPort

RxMaxCellRateUbr

This attribute indicates the received cell rate (CLP=0+1) during the busiest minute of the collection interval by ATM service category.

Data Source

RNC Interface Node Observations

Source Field

VS.RxMaxCellRate.Ubr

Source Section

AtmPort

RxMinCellRate

This attribute indicates the received cell rate (CLP=0+1) during the least busy minute of the collection interval.

Data Source

RNC Interface Node Observations

Source Field

VS.RxMinCellRate

Source Section

AtmPort

RxMinCellRateAbr

This attribute indicates the received cell rate (CLP=0+1) during the least busy minute of the collection interval by ATM service category.

Data Source

RNC Interface Node Observations

Source Field

VS.RxMinCellRate.Abr

Source Section

AtmPort

RxMinCellRateCbr

This attribute indicates the received cell rate (CLP=0+1) during the least busy minute of the collection interval by ATM service category.

Data Source

RNC Interface Node Observations

Source Field

VS.RxMinCellRate.Cbr

Source Section

AtmPort

RxMinCellRateClp

This attribute indicates the received cell rate (CLP=1) during the least busy minute of the collection interval.

Data Source

RNC Interface Node Observations

Source Field

VS.RxMinCellRateClp

Source Section

AtmPort

RxMinCellRateClpAbr

This attribute indicates the received cell rate (CLP=1) during the least busy minute of the collection interval by ATM service category.

Data Source

RNC Interface Node Observations

Source Field

VS.RxMinCellRateClp.Abr

Source Section

AtmPort

RxMinCellRateClpCbr

This attribute indicates the received cell rate (CLP=1) during the least busy minute of the collection interval by ATM service category.

Data Source

RNC Interface Node Observations

Source Field

VS.RxMinCellRateClp.Cbr

Source Section

AtmPort

RxMinCellRateClpNrtvbr

This attribute indicates the received cell rate (CLP=1) during the least busy minute of the collection interval by ATM service category.

Data Source

RNC Interface Node Observations

Source Field

VS.RxMinCellRateClp.Nrtvbr

Source Section

AtmPort

RxMinCellRateClpRtvbr

This attribute indicates the received cell rate (CLP=1) during the least busy minute of the collection interval by ATM service category.

Data Source

RNC Interface Node Observations

Source Field

VS.RxMinCellRateClp.Rtvbr

Source Section

AtmPort

RxMinCellRateClpUbr

This attribute indicates the received cell rate (CLP=1) during the least busy minute of the collection interval by ATM service category.

Data Source

RNC Interface Node Observations

Source Field

VS.RxMinCellRateClp.Ubr

Source Section

AtmPort

RxMinCellRateNrtvbr

This attribute indicates the received cell rate (CLP=0+1) during the least busy minute of the collection interval by ATM service category.

Data Source

RNC Interface Node Observations

Source Field

VS.RxMinCellRate.Nrtvbr

Source Section

AtmPort

RxMinCellRateRtvbr

This attribute indicates the received cell rate (CLP=0+1) during the least busy minute of the collection interval by ATM service category.

Data Source

RNC Interface Node Observations

Source Field

VS.RxMinCellRate.Rtvbr

Source Section

AtmPort

RxMinCellRateUbr

This attribute indicates the received cell rate (CLP=0+1) during the least busy minute of the collection interval by ATM service category.

Data Source

RNC Interface Node Observations

Source Field

VS.RxMinCellRate.Ubr

Source Section

AtmPort

RxUtilization

This attribute indicates the average receive traffic rate over the most recent collection interval expressed as a percentage of the ATM link bandwidth. The value of this attribute may exceed 100%. If the utilization exceeds 65535% then 65535 is displayed. If the Lsp has a bandwidth of 0, then 0 is displayed for the utilization.

Data Source

RNC Interface Node Observations

Source Field

VS.RxUtilization

Source Section

AtmPort

TxAvgCellRate

This attribute indicates the average transmitted cell rate (CLP=0+1) during the collection interval.

Data Source

RNC Interface Node Observations

Source Field

VS.TxAvgCellRate

Source Section

AtmPort

TxAvgCellRateAbr

This attribute indicates the average transmitted cell rate (CLP=0+1) during the collection interval by ATM service category.

Data Source

RNC Interface Node Observations

Source Field

VS.TxAvgCellRate.Abr

Source Section

AtmPort

TxAvgCellRateCbr

This attribute indicates the average transmitted cell rate (CLP=0+1) during the collection interval by ATM service category.

Data Source

RNC Interface Node Observations

Source Field

VS.TxAvgCellRate.Cbr

Source Section

AtmPort

TxAvgCellRateClp

This attribute indicates the average transmitted cell rate (CLP=1) during the collection interval.

Data Source

RNC Interface Node Observations

Source Field

VS.TxAvgCellRateClp

Source Section

AtmPort

TxAvgCellRateClpAbr

This attribute indicates the average transmitted cell rate (CLP=1) during the collection interval by ATM service category.

Data Source

RNC Interface Node Observations

Source Field

VS.TxAvgCellRateClp.Abr

Source Section

AtmPort

TxAvgCellRateClpCbr

This attribute indicates the average transmitted cell rate (CLP=1) during the collection interval by ATM service category.

Data Source

RNC Interface Node Observations

Source Field

VS.TxAvgCellRateClp.Cbr

Source Section

AtmPort

TxAvgCellRateClpNrtvbr

This attribute indicates the average transmitted cell rate (CLP=1) during the collection interval by ATM service category.

Data Source

RNC Interface Node Observations

Source Field

VS.TxAvgCellRateClp.Nrtvbr

Source Section

AtmPort

TxAvgCellRateClpRtvbr

This attribute indicates the average transmitted cell rate (CLP=1) during the collection interval by ATM service category.

Data Source

RNC Interface Node Observations

Source Field

VS.TxAvgCellRateClp.Rtvbr

Source Section

AtmPort

TxAvgCellRateClpUbr

This attribute indicates the average transmitted cell rate (CLP=1) during the collection interval by ATM service category.

Data Source

RNC Interface Node Observations

Source Field

VS.TxAvgCellRateClp.Ubr

Source Section

AtmPort

TxAvgCellRateNrtvbr

This attribute indicates the average transmitted cell rate (CLP=0+1) during the collection interval by ATM service category.

Data Source

RNC Interface Node Observations

Source Field

VS.TxAvgCellRate.Nrtvbr

Source Section

AtmPort

TxAvgCellRateRtvbr

This attribute indicates the average transmitted cell rate (CLP=0+1) during the collection interval by ATM service category.

Data Source

RNC Interface Node Observations

Source Field

VS.TxAvgCellRate.Rtvbr

Source Section

AtmPort

TxAvgCellRateUbr

This attribute indicates the average transmitted cell rate (CLP=0+1) during the collection interval by ATM service category.

Data Source

RNC Interface Node Observations

Source Field

VS.TxAvgCellRate.Ubr

Source Section

AtmPort

TxCellDiscards

This attribute counts the cells (CLP=0+1) which are discarded before being transmitted during the collection interval.

Data Source

RNC Interface Node Observations

Source Field

VS.TxCellDiscards

Source Section

AtmPort

TxCellDiscardsAbr

This attribute counts the cells (CLP=0+1) which are discarded before being transmitted during the collection interval by ATM service category.

Data Source

RNC Interface Node Observations

Source Field

VS.TxCellDiscards.Abr

Source Section

AtmPort

TxCellDiscardsCbr

This attribute counts the cells (CLP=0+1) which are discarded before being transmitted during the collection interval by ATM service category.

Data Source

RNC Interface Node Observations

Source Field

VS.TxCellDiscards.Cbr

Source Section

AtmPort

TxCellDiscardsClp

This attribute counts the cells (CLP=1) which are discarded before being transmitted during the collection interval.

Data Source

RNC Interface Node Observations

Source Field

VS.TxCellDiscardsClp

Source Section

AtmPort

TxCellDiscardsClpAbr

This attribute counts the cells (CLP=1) which are discarded before being transmitted during the collection interval by ATM service category.

Data Source

RNC Interface Node Observations

Source Field

VS.TxCellDiscardsClp.Abr

Source Section

AtmPort

TxCellDiscardsClpCbr

This attribute counts the cells (CLP=1) which are discarded before being transmitted during the collection interval by ATM service category.

Data Source

RNC Interface Node Observations

Source Field

VS.TxCellDiscardsClp.Cbr

Source Section

AtmPort

TxCellDiscardsClpNrtvbr

This attribute counts the cells (CLP=1) which are discarded before being transmitted during the collection interval by ATM service category.

Data Source

RNC Interface Node Observations

Source Field

VS.TxCellDiscardsClp.Nrtvbr

Source Section

AtmPort

TxCellDiscardsClpRtvbr

This attribute counts the cells (CLP=1) which are discarded before being transmitted during the collection interval by ATM service category.

Data Source

RNC Interface Node Observations

Source Field

VS.TxCellDiscardsClp.Rtvbr

Source Section

AtmPort

TxCellDiscardsClpUbr

This attribute counts the cells (CLP=1) which are discarded before being transmitted during the collection interval by ATM service category.

Data Source

RNC Interface Node Observations

Source Field

VS.TxCellDiscardsClp.Ubr

Source Section

AtmPort

TxCellDiscardsNrtvbr

This attribute counts the cells (CLP=0+1) which are discarded before being transmitted during the collection interval by ATM service category.

Data Source

RNC Interface Node Observations

Source Field

VS.TxCellDiscards.Nrtvbr

Source Section

AtmPort

TxCellDiscardsRtvbr

This attribute counts the cells (CLP=0+1) which are discarded before being transmitted during the collection interval by ATM service category.

Data Source

RNC Interface Node Observations

Source Field

VS.TxCellDiscards.Rtvbr

Source Section

AtmPort

TxCellDiscardsUbr

This attribute counts the cells (CLP=0+1) which are discarded before being transmitted during the collection interval by ATM service category.

Data Source

RNC Interface Node Observations

Source Field

VS.TxCellDiscards.Ubr

Source Section

AtmPort

TxFrameDiscards

This attribute counts the frames (CLP=0+1) which are discarded before being transmitted during the collection interval.

Data Source

RNC Interface Node Observations

Source Field

VS.TxFrameDiscards

Source Section

AtmPort

TxFrameDiscardsAbr

This attribute counts the frames (CLP=0+1) which are discarded before being transmitted during the collection interval by ATM service category.

Data Source

RNC Interface Node Observations

Source Field

VS.TxFrameDiscards.Abr

Source Section

AtmPort

TxFrameDiscardsCbr

This attribute counts the frames (CLP=0+1) which are discarded before being transmitted during the collection interval by ATM service category.

Data Source

RNC Interface Node Observations

Source Field

VS.TxFrameDiscards.Cbr

Source Section

AtmPort

TxFrameDiscardsClp

This attribute counts the frames (CLP=1) which are discarded before being transmitted during the collection interval.

Data Source

RNC Interface Node Observations

Source Field

VS.TxFrameDiscardsClp

Source Section

AtmPort

TxFrameDiscardsClpAbr

This attribute counts the frames (CLP=1) which are discarded before being transmitted during the collection interval by ATM service category.

Data Source

RNC Interface Node Observations

Source Field

VS.TxFrameDiscardsClp.Abr

Source Section

AtmPort

TxFrameDiscardsClpCbr

This attribute counts the frames (CLP=1) which are discarded before being transmitted during the collection interval by ATM service category.

Data Source

RNC Interface Node Observations

Source Field

VS.TxFrameDiscardsClp.Cbr

Source Section

AtmPort

TxFrameDiscardsClpNrtvbr

This attribute counts the frames (CLP=1) which are discarded before being transmitted during the collection interval by ATM service category.

Data Source

RNC Interface Node Observations

Source Field

VS.TxFrameDiscardsClp.Nrtvbr

Source Section

AtmPort

TxFrameDiscardsClpRtvbr

This attribute counts the frames (CLP=1) which are discarded before being transmitted during the collection interval by ATM service category.

Data Source

RNC Interface Node Observations

Source Field

VS.TxFrameDiscardsClp.Rtvbr

Source Section

AtmPort

TxFrameDiscardsClpUbr

This attribute counts the frames (CLP=1) which are discarded before being transmitted during the collection interval by ATM service category.

Data Source

RNC Interface Node Observations

Source Field

VS.TxFrameDiscardsClp.Ubr

Source Section

AtmPort

TxFrameDiscardsNrtvbr

This attribute counts the frames (CLP=0+1) which are discarded before being transmitted during the collection interval by ATM service category.

Data Source

RNC Interface Node Observations

Source Field

VS.TxFrameDiscards.Nrtvbr

Source Section

AtmPort

TxFrameDiscardsRtvbr

This attribute counts the frames (CLP=0+1) which are discarded before being transmitted during the collection interval by ATM service category.

Data Source

RNC Interface Node Observations

Source Field

VS.TxFrameDiscards.Rtvbr

Source Section

AtmPort

TxFrameDiscardsUbr

This attribute counts the frames (CLP=0+1) which are discarded before being transmitted during the collection interval by ATM service category.

Data Source

RNC Interface Node Observations

Source Field

VS.TxFrameDiscards.Ubr

Source Section

AtmPort

TxMaxCellRate

This attribute indicates the transmitted cell rate (CLP=0+1) during the busiest minute of the collection interval.

Data Source

RNC Interface Node Observations

Source Field

VS.TxMaxCellRate

Source Section

AtmPort

TxMaxCellRateAbr

This attribute indicates the transmitted cell rate (CLP=0+1) during the busiest minute of the collection interval by ATM service category.

Data Source

RNC Interface Node Observations

Source Field

VS.TxMaxCellRate.Abr

Source Section

AtmPort

TxMaxCellRateCbr

This attribute indicates the transmitted cell rate (CLP=0+1) during the busiest minute of the collection interval by ATM service category.

Data Source

RNC Interface Node Observations

Source Field

VS.TxMaxCellRate.Cbr

Source Section

AtmPort

TxMaxCellRateClp

This attribute indicates the transmitted cell rate (CLP=1) during the busiest minute of the collection interval.

Data Source

RNC Interface Node Observations

Source Field

VS.TxMaxCellRateClp

Source Section

AtmPort

TxMaxCellRateClpAbr

This attribute indicates the transmitted cell rate (CLP=1) during the busiest minute of the collection interval by ATM service category.

Data Source

RNC Interface Node Observations

Source Field

VS.TxMaxCellRateClp.Abr

Source Section

AtmPort

TxMaxCellRateClpCbr

This attribute indicates the transmitted cell rate (CLP=1) during the busiest minute of the collection interval by ATM service category.

Data Source

RNC Interface Node Observations

Source Field

VS.TxMaxCellRateClp.Cbr

Source Section

AtmPort

TxMaxCellRateClpNrtvbr

This attribute indicates the transmitted cell rate (CLP=1) during the busiest minute of the collection interval by ATM service category.

Data Source

RNC Interface Node Observations

Source Field

VS.TxMaxCellRateClp.Nrtvbr

Source Section

AtmPort

TxMaxCellRateClpRtvbr

This attribute indicates the transmitted cell rate (CLP=1) during the busiest minute of the collection interval by ATM service category.

Data Source

RNC Interface Node Observations

Source Field

VS.TxMaxCellRateClp.Rtvbr

Source Section

AtmPort

TxMaxCellRateClpUbr

This attribute indicates the transmitted cell rate (CLP=1) during the busiest minute of the collection interval by ATM service category.

Data Source

RNC Interface Node Observations

Source Field

VS.TxMaxCellRateClp.Ubr

Source Section

AtmPort

TxMaxCellRateNrtvbr

This attribute indicates the transmitted cell rate (CLP=0+1) during the busiest minute of the collection interval by ATM service category.

Data Source

RNC Interface Node Observations

Source Field

VS.TxMaxCellRate.Nrtvbr

Source Section

AtmPort

TxMaxCellRateRtvbr

This attribute indicates the transmitted cell rate (CLP=0+1) during the busiest minute of the collection interval by ATM service category.

Data Source

RNC Interface Node Observations

Source Field

VS.TxMaxCellRate.Rtvbr

Source Section

AtmPort

TxMaxCellRateUbr

This attribute indicates the transmitted cell rate (CLP=0+1) during the busiest minute of the collection interval by ATM service category.

Data Source

RNC Interface Node Observations

Source Field

VS.TxMaxCellRate.Ubr

Source Section

AtmPort

TxMinCellRate

This attribute indicates the transmitted cell rate (CLP=0+1) during the least busy minute of the collection interval.

Data Source

RNC Interface Node Observations

Source Field

VS.TxMinCellRate

Source Section

AtmPort

TxMinCellRateAbr

This attribute indicates the transmitted cell rate (CLP=0+1) during the least busy minute of the collection interval by ATM service category.

Data Source

RNC Interface Node Observations

Source Field

VS.TxMinCellRate.Abr

Source Section

AtmPort

TxMinCellRateCbr

This attribute indicates the transmitted cell rate (CLP=0+1) during the least busy minute of the collection interval by ATM service category.

Data Source

RNC Interface Node Observations

Source Field

VS.TxMinCellRate.Cbr

Source Section

AtmPort

TxMinCellRateClp

This attribute indicates the transmitted cell rate (CLP=1) during the least busy minute of the collection interval.

Data Source

RNC Interface Node Observations

Source Field

VS.TxMinCellRateClp

Source Section

AtmPort

TxMinCellRateClpAbr

This attribute indicates the transmitted cell rate (CLP=1) during the least busy minute of the collection interval by ATM service category.

Data Source

RNC Interface Node Observations

Source Field

VS.TxMinCellRateClp.Abr

Source Section

AtmPort

TxMinCellRateClpCbr

This attribute indicates the transmitted cell rate (CLP=1) during the least busy minute of the collection interval by ATM service category.

Data Source

RNC Interface Node Observations

Source Field

VS.TxMinCellRateClp.Cbr

Source Section

AtmPort

TxMinCellRateClpNrtvbr

This attribute indicates the transmitted cell rate (CLP=1) during the least busy minute of the collection interval by ATM service category.

Data Source

RNC Interface Node Observations

Source Field

VS.TxMinCellRateClp.Nrtvbr

Source Section

AtmPort

TxMinCellRateClpRtvbr

This attribute indicates the transmitted cell rate (CLP=1) during the least busy minute of the collection interval by ATM service category.

Data Source

RNC Interface Node Observations

Source Field

VS.TxMinCellRateClp.Rtvbr

Source Section

AtmPort

TxMinCellRateClpUbr

This attribute indicates the transmitted cell rate (CLP=1) during the least busy minute of the collection interval by ATM service category.

Data Source

RNC Interface Node Observations

Source Field

VS.TxMinCellRateClp.Ubr

Source Section

AtmPort

TxMinCellRateNrtvbr

This attribute indicates the transmitted cell rate (CLP=0+1) during the least busy minute of the collection interval by ATM service category.

Data Source

RNC Interface Node Observations

Source Field

VS.TxMinCellRate.Nrtvbr

Source Section

AtmPort

TxMinCellRateRtvbr

This attribute indicates the transmitted cell rate (CLP=0+1) during the least busy minute of the collection interval by ATM service category.

Data Source

RNC Interface Node Observations

Source Field

VS.TxMinCellRate.Rtvbr

Source Section

AtmPort

TxMinCellRateUbr

This attribute indicates the transmitted cell rate (CLP=0+1) during the least busy minute of the collection interval by ATM service category.

Data Source

RNC Interface Node Observations

Source Field

VS.TxMinCellRate.Ubr

Source Section

AtmPort

TxUtilization

This attribute indicates the average transmit traffic rate over the most recent collection interval expressed as a percentage of the ATM link bandwidth. The value of this attribute may exceed 100%. If the utilization exceeds 65535% then 65535 is displayed. If the Lsp has a bandwidth of 0, then 0 is displayed for the utilization.

Data Source

RNC Interface Node Observations

Source Field

VS.TxUtilization

Source Section

AtmPort

IubInterface Primitive Calculations

The following is a list of primitive calculations for the IubInterface entity.

GRAPHmultiLineSeparator

Special Control Field for Multi-Line Graphs

Calculation

```
""
```

NUMDAYS

of days in Report

Calculation

```
DAYSINREPORT()
```

NUMHOURS

of hours in Summation Data

Calculation

LogicalProcessor Primitive Calculations

The following is a list of primitive calculations for the LogicalProcessor entity.

GRAPHmultiLineSeparator

Special Control Field for Multi-Line Graphs

Calculation

```
""
```

NUMDAYS

of days in Report

Calculation

```
DAYSINREPORT()
```

NUMHOURS

of hours in Summation Data

Calculation

LogicalProcessor Peg Counts

The following is a list of peg counts for the LogicalProcessor entity.

CpuUtilAvg

This attribute indicates an average processor utilization level over the specified time period, timeInterval. This average is calculated based on one minute CPU utilization averages.

Data Source

RNC Interface Node Observations

Source Field

VS.CpuUtilAvg

Source Section

LogicalProcessor

CpuUtilAvgMax

This attribute indicates the maximum processor utilization level over a specified time period, timeInterval. This is based on one minute CPU utilization averages.

Data Source

RNC Interface Node Observations

Source Field

VS.CpuUtilAvgMax

Source Section

LogicalProcessor

CpuUtilAvgMin

This attribute indicates the minimum processor utilization level over a specified time period, timeInterval. This is based on one minute CPU utilization averages.

Data Source

RNC Interface Node Observations

Source Field

VS.CpuUtilAvgMin

Source Section

LogicalProcessor

LocalMsgBlockCapacity

This attribute indicates the processor's local message block memory capacity. These message blocks are used for local messaging on the card.

Data Source

RNC Interface Node Observations

Source Field

VS.LocalMsgBlockCapacity

Source Section

LogicalProcessor

LocalMsgBlockUsageAvg

This attribute indicates the processor's average memory utilization of message blocks used for local messaging on the card, calculated over a specified collection interval. This is calculated using 15 second samples.

Data Source

RNC Interface Node Observations

Source Field

VS.LocalMsgBlockUsageAvg

Source Section

LogicalProcessor

LocalMsgBlockUsageMax

This attribute indicates the processor's maximum memory utilization of message blocks used for local messaging on the card, calculated over a specified collection interval.

Data Source

RNC Interface Node Observations

Source Field

VS.LocalMsgBlockUsageMax

Source Section

LogicalProcessor

LocalMsgBlockUsageMin

This attribute indicates the processor's minimum memory utilization of message blocks used for local messaging on the card, calculated over a specified collection interval.

Data Source

RNC Interface Node Observations

Source Field

VS.LocalMsgBlockUsageMin

Source Section

LogicalProcessor

MemoryCapacityFastRAM

This attribute indicates the processor cards memory capacity for each type of memory.

Data Source

RNC Interface Node Observations

Source Field

VS.MemoryCapacity.FastRAM

Source Section

LogicalProcessor

MemoryCapacityNormalRAM

This attribute indicates the processor cards memory capacity for each type of memory.

Data Source

RNC Interface Node Observations

Source Field

VS.MemoryCapacity.NormalRAM

Source Section

LogicalProcessor

MemoryCapacitySharedRAM

This attribute indicates the processor cards memory capacity for each type of memory.

Data Source

RNC Interface Node Observations

Source Field

VS.MemoryCapacity.SharedRAM

Source Section

LogicalProcessor

MemoryUsageAvgFastRAM

This attribute indicates the processor's average memory utilization for each type of memory in the specified collection interval. This is calculated using 15 second samples.

Data Source

RNC Interface Node Observations

Source Field

VS.MemoryUsageAvg.FastRAM

Source Section

LogicalProcessor

MemoryUsageAvgMaxFastRAM

This attribute indicates the processor's maximum memory utilization for each type of memory in the specified collection interval. This is calculated using 15 second samples.

Data Source

RNC Interface Node Observations

Source Field

VS.MemoryUsageAvgMax.FastRAM

Source Section

LogicalProcessor

MemoryUsageAvgMaxNormalRAM

This attribute indicates the processor's maximum memory utilization for each type of memory in the specified collection interval. This is calculated using 15 second samples.

Data Source

RNC Interface Node Observations

Source Field

VS.MemoryUsageAvgMax.NormalRAM

Source Section

LogicalProcessor

MemoryUsageAvgMaxSharedRAM

This attribute indicates the processor's maximum memory utilization for each type of memory in the specified collection interval. This is calculated using 15 second samples.

Data Source

RNC Interface Node Observations

Source Field

VS.MemoryUsageAvgMax.SharedRAM

Source Section

LogicalProcessor

MemoryUsageAvgMinFastRAM

This attribute indicates the processor's minimum memory utilization for each type of memory in the specified collection interval. This is calculated using 15 second samples.

Data Source

RNC Interface Node Observations

Source Field

VS.MemoryUsageAvgMin.FastRAM

Source Section

LogicalProcessor

MemoryUsageAvgMinNormalRAM

This attribute indicates the processor's minimum memory utilization for each type of memory in the specified collection interval. This is calculated using 15 second samples.

Data Source

RNC Interface Node Observations

Source Field

VS.MemoryUsageAvgMin.NormalRAM

Source Section

LogicalProcessor

MemoryUsageAvgMinSharedRAM

This attribute indicates the processor's minimum memory utilization for each type of memory in the specified collection interval. This is calculated using 15 second samples.

Data Source

RNC Interface Node Observations

Source Field

VS.MemoryUsageAvgMin.SharedRAM

Source Section

LogicalProcessor

MemoryUsageAvgNormalRAM

This attribute indicates the processor's average memory utilization for each type of memory in the specified collection interval. This is calculated using 15 second samples.

Data Source

RNC Interface Node Observations

Source Field

VS.MemoryUsageAvg.NormalRAM

Source Section

LogicalProcessor

MemoryUsageAvgSharedRAM

This attribute indicates the processor's average memory utilization for each type of memory in the specified collection interval. This is calculated using 15 second samples.

Data Source

RNC Interface Node Observations

Source Field

VS.MemoryUsageAvg.SharedRAM

Source Section

LogicalProcessor

SharedMsgBlockCapacity

This attribute indicates the processor's shared message block memory capacity.

Data Source

RNC Interface Node Observations

Source Field

VS.SharedMsgBlockCapacity

Source Section

LogicalProcessor

SharedMsgBlockUsageAvg

This attribute indicates the processor's average shared message block memory utilization over a specified collection interval. This is calculated using 15 second samples.

Data Source

RNC Interface Node Observations

Source Field

VS.SharedMsgBlockUsageAvg

Source Section

LogicalProcessor

SharedMsgBlockUsageAvgMax

This attribute indicates the processor's maximum shared message block memory utilization over a specified collection interval. This is calculated using 15 second samples.

Data Source

RNC Interface Node Observations

Source Field

VS.SharedMsgBlockUsageAvgMax

Source Section

LogicalProcessor

SharedMsgBlockUsageAvgMin

This attribute indicates the processor's minimum shared message block memory utilization over a specified collection interval. This is calculated using 15 second samples.

Data Source

RNC Interface Node Observations

Source Field

VS.SharedMsgBlockUsageAvgMin

Source Section

LogicalProcessor

NeighborCell Primitive Calculations

The following is a list of primitive calculations for the NeighborCell entity.

GRAPHmultiLineSeparator

Special Control Field for Multi-Line Graphs

Calculation

```
""
```

Number_of_Successful_UMTS_to_GSM_HO

This KPI reflects the number of successful handovers from a certain UMTS cell to a certain GSM neighbour cell.

Calculation

```
vsum (NumUMTS_GSM_HOPerNCell_Att, -1.0 * NumUMTS_GSM_HOPerNCell_Fail)
```

NUMDAYS

of days in Report

Calculation

```
DAYSINREPORT()
```

NUMHOURS

of hours in Summation Data

Calculation

UMTS_to_GSM_HO_Sucess_Rate

This KPI reflects the percentage of successful handovers from a certain UMTS cell to a certain GSM neighbour cell.

Calculation

```
vsum (NumUMTS_GSM_HOPerNCell_Att, -1.0 * NumUMTS_GSM_HOPerNCell_Fail) *
100.0 / NumUMTS_GSM_HOPerNCell_Att
```

UMTS_to_UMTS_HHO_Sucess_Rate

This KPI reflects the percentage of successful hard handovers from a certain UMTS cell to a UMTS neighbour cell.

Calculation

```
HHO_InterFreqPerNCell_Succ * 100.0 / HHO_InterFreqPerNCell_Att
```

NeighborCell Peg Counts

The following is a list of peg counts for the NeighborCell entity.

adjacentCell

Pointer to UTRAN cell or external UTRAN cell. Fully Distinguished Name of the corresponding object.

Data Source

OMC-U Bulk CM

Source Field

un:adjacentCell / gn:adjacentCell

Source Section

UtranRelation / GsmRelation

bcc

Base station colour code, BCC (part of BSIC. Ref 3GPP TS 44.018 [4]) for the external GSM cell, that is broadcast in System Information in the Cell.

Data Source

OMC-U Bulk CM

Source Field

gn:bcc

Source Section

ExternalGsmCell

bcchFrequency

This attribute contains the absolute radio frequency channel number of the BCCH channel of the external GSM cell, that is broadcast in System Information in the Cell.

Data Source

OMC-U Bulk CM

Source Field

gn:bcchFrequency

Source Section

ExternalGsmCell

cellIdentity

Cell Identity (Ref 3GPP TS 24.008 [3]).

Data Source

OMC-U Bulk CM

Source Field

gn:cellIdentity

Source Section

ExternalGsmCell

cellIndex

Cell index number (for handover)

Data Source

OMC-U Bulk CM

Source Field

lu:cellIndex

Source Section

UtranRelation

cellIndividualOffset

Maps to corresponding attribute in the rnc.Lcell.outGsmAdjCells.cellOffset

Data Source

OMC-U Bulk CM

Source Field

lu:cellIndividualOffset

Source Section

GsmRelation

cellIndividualOffsetForHo

Maps to corresponding subelements of rnc.Lcell.outGsmAdjCells.cioForHO

Data Source

OMC-U Bulk CM

Source Field

lu:cellIndividualOffsetForHo

Source Section

GsmRelation

cellOffset

Maps to subelement of rnc.LCcell.outFDDAdjCells or LCell::outInterFreqFddAdjCells

Data Source

OMC-U Bulk CM

Source Field

lu:cellOffset

Source Section

UtranRelation

choiceAccuracy

Maps to rnc.LCcell.outFDDddAdjCells.choiceAccuracy

Data Source

OMC-U Bulk CM

Source Field

lu:choiceAccuracy

Source Section

UtranRelation

cId

cId is the identifier of a cell in one RNC (Ref. 3GPP TS 25.401).

Data Source

OMC-U Bulk CM

Source Field

un:cId

Source Section

ExternalUtranCell

Data_interval_for_GSM_Ncells

Data interval for this collection of data in seconds. It is taken from the relevant <gp> tag in the RNC MATRIX XML data file. (0 indicates that daily data has been loaded within the last 24 hours.)

Data Source

RNC MATRIX

Source Field

<gp> tag

Data_interval_for_UMTS_Ncells

Data interval for this collection of data in seconds. It is taken from the relevant <gp> tag in the RNC MATRIX XML data file. (0 indicates that daily data has been loaded within the last 24 hours.)

Data Source

RNC MATRIX

Source Field

<gp> tag

HHO_InterFreqPerNCell_Att

Number of attempted inter-frequency hard handover per neighbour cell from the current best cell

Data Source

RNC MATRIX

Source Field

HHO.InterFreqPerNCell.Att

Source Section

Handover matrix counter for hard handover

HHO_InterFreqPerNCell_Succ

Number of successful inter-frequency hard handover per neighbour cell from the current best cell

Data Source

RNC MATRIX

Source Field

HHO.InterFreqPerNCell.Succ

Source Section

Handover matrix counter for hard handover

lac

Location Area Code, LAC (Ref. 3GPP TS 23.003)

Data Source

OMC-U Bulk CM

Source Field

un:lac / gn:lac

Source Section

ExternalUtranCell / ExternalGsmCell

mcc

Mobile Country Code, MCC. It is a part of the PLMN Id (Ref. 3GPP TS 23.003).

Data Source

OMC-U Bulk CM

Source Field

un:mcc / gn:mcc

Source Section

ExternalUtranCell / ExternalGsmCell

mnc

Mobile Network Code, MNC. It is a part of the PLMN Id (Ref. 3GPP TS 23.003).

Data Source

OMC-U Bulk CM

Source Field

un:mnc / gn:mnc

Source Section

ExternalUtranCell / ExternalGsmCell

mutualRelation

Logical value that indicates whether the relationship is mutual (reciprocal) or not.

Data Source

OMC-U Bulk CM

Source Field

lu:mutualRelation

Source Section

UtranRelation

MX_HHO_IntraFreq_Att

Number of attempted intra-frequency hard handover per neighbour cell from the current best cell

Data Source

RNC MATRIX

Source Field

VS.MX.HHO.IntraFreq.Att

Source Section

Handover matrix counter for hard handover

MX_HHO_IntraFreq_Succ

Number of successful intra-frequency hard handover per neighbour cell from the current best cell

Data Source

RNC MATRIX

Source Field

VS.MX.HHO.IntraFreq.Succ

Source Section

Handover matrix counter for hard handover

MX_IRATHO_OutPSUTRAN_Att

Number of attempted outgoing packet switched inter-RAT handovers, UTRAN controlled, per neighbour cell from the current best cell

Data Source

RNC MATRIX

Source Field

VS.MX.IRATHO.OutPSUTRAN.Att

Source Section

Handover Matrix Counters for Inter RAT Handover - UMTS to GSM

MX_IRATHO_OutPSUTRAN_FailTimeout

Number of failed/timeout outgoing packet switched inter-RAT handovers, UTRAN controlled, per neighbour cell from the current best cell

Data Source

RNC MATRIX

Source Field

VS.MX.IRATHO.OutPSUTRAN.FailTimeout

Source Section

Handover Matrix Counters for Inter RAT Handover - UMTS to GSM

ncc

Network Colour Code, NCC (part of BSIC. Ref 3GPP TS 44.018 [4]) for the external GSM cell, that is broadcast in System Information in the Cell.

Data Source

OMC-U Bulk CM

Source Field

gn:ncc

Source Section

ExternalGsmCell

nLSAPriority

Maps to subelement of rnc.LCcell.outFDDAdjCells or LCell::outInterFreqFddAdjCells

Data Source

OMC-U Bulk CM

Source Field

lu:nLSAPriority

Source Section

UtranRelation

NumUMTS_GSM_HOPerNCell_Att

Number of Outgoing Attempted GSM Handover per UMTS Cell to its GSM Neighbour Cells

Data Source

RNC MATRIX

Source Field

NumUMTS-GSM_HOPerNCell.Att

Source Section

Handover Matrix Counters for Inter RAT Handover - UMTS to GSM

NumUMTS_GSM_HOPerNCell_Fail

Number of Outgoing Failed GSM Handover per UMTS Cell to its GSM Neighbour Cells

Data Source

RNC MATRIX

Source Field

NumUMTS-GSM_HOPerNCell.Fail

Source Section

Handover Matrix Counters for Inter RAT Handover - UMTS to GSM

peerRncList

List of peer RNCs

Data Source

OMC-U Bulk CM

Source Field

lu:peerRncList

Source Section

GsmRelation

primaryCpichPower

The power of the primary CPICH channel in the cell (Ref. 3GPP TS 25.433).

Data Source

OMC-U Bulk CM

Source Field

un:primaryCpichPower

Source Section

ExternalUtranCell

primaryScramblingCode

The primary DL scrambling code used by the cell (Ref. 3GPP TS 25.433).

Data Source

OMC-U Bulk CM

Source Field

un:primaryScramblingCode

Source Section

ExternalUtranCell

priority

Priority for GSM handover

Data Source

OMC-U Bulk CM

Source Field

lu:priority

Source Section

GsmRelation

qOffset1

Maps to rnc.LCell.outInterFreqFDDAdjCells.qOffset1

Data Source

OMC-U Bulk CM

Source Field

lu:qOffset1

Source Section

UtranRelation

qOffset2

Maps to rnc.LCell.outInterFreqFDDAdjCells.qOffset2

Data Source

OMC-U Bulk CM

Source Field

lu:qOffset2

Source Section

UtranRelation

rac

Routing Area Code, RAC (Ref. 3GPP TS 23.003)

Data Source

OMC-U Bulk CM

Source Field

un:rac / gn:rac

Source Section

ExternalUtranCell / ExternalGsmCell

racc

Routing Area Colour Code, RACC. Ref 3GPP TS 44.018 [4].

Data Source

OMC-U Bulk CM

Source Field

gn:racc

Source Section

ExternalGsmCell

relationLabel

UtranRelation label provided by the operator.

Data Source

OMC-U Bulk CM

Source Field

lu:relationLabel

Source Section

UtranRelation / GsmRelation

relationType

Maps to relationType Attribute of one of the following classes, based on the relationType: [SNM]UtranCell.outgoingHO, [SNM]UtranCell.outgoingIfCrsMaho, snm.UtranCell.outgoingGsmIsCrsMaho, snm.UtranCell.outgoingGsmIsDahoNqb or snm.UtranCell.outgoingGsmIsDaho.

Data Source

OMC-U Bulk CM

Source Field

lu:relationType

Source Section

UtranRelation / GsmRelation

rncId

Unique RNC ID of the External RNC (Ref. 3GPP TS 23.003).

Data Source

OMC-U Bulk CM

Source Field

un:rncId

Source Section

ExternalUtranCell

timeDiffToCell

Maps to subelement of rnc.LCcell.outFDDAdjCells or LCell::outInterFreqFddAdjCells

Data Source

OMC-U Bulk CM

Source Field

lu:timeDiffToCell

Source Section

UtranRelation

uarfcnDl

The DL UTRA absolute Radio Frequency Channel number, UARFCN (Ref. 3GPP TS 25.433).

Data Source

OMC-U Bulk CM

Source Field

un:uarfcnDl

Source Section

ExternalUtranCell

uarfcnUl

The UL UTRA absolute Radio Frequency Channel number, UARFCN (Ref. 3GPP TS 25.433).

Data Source

OMC-U Bulk CM

Source Field

un:uarfcnUl

Source Section

ExternalUtranCell

userLabel

A user-friendly (and user assigned) name of the associated object.

Data Source

OMC-U Bulk CM

Source Field

un:userLabel / gn:userLabel

Source Section

ExternalUtranCell / ExternalGsmCell

NeighborRNC Primitive Calculations

The following is a list of primitive calculations for the NeighborRNC entity.

GRAPHmultiLineSeparator

Special Control Field for Multi-Line Graphs

Calculation

```
""
```

Inter_RNC_SHO_Fail_Rate_No_Reply

The Inter RNC SHO Failure Rate due to No Reply is the percentage of the failed performed inter RNC SHO with cause: No Reply.

Calculation

```
NumInterRNCSHOFail_NoReply * 100.0 / vsum (NumInterRNCSHOAtt_CSV,
NumInterRNCSHOAtt_CSVandPS, NumInterRNCSHOAtt_PS_LowData,
NumInterRNCSHOAtt_PS_HighData, NumInterRNCSHOAtt_Signalling)
```

Inter_RNC_SHO_Fail_Rate_UE_Rej

The Inter RNC SHO Failure Rate due to UE Reject is the percentage of the failed performed inter RNC SHO due to "Active Set Update Failure" message received from the UE.

Calculation

```
NumInterRNCSHOFail_UERej * 100.0 / vsum (NumInterRNCSHOAtt_CSV,
NumInterRNCSHOAtt_CSVandPS, NumInterRNCSHOAtt_PS_LowData,
NumInterRNCSHOAtt_PS_HighData, NumInterRNCSHOAtt_Signalling)
```

Inter_RNC_SHO_Success_Rate_CS_Data

The Inter RNC SHO Success Rate for CS Data is the percentage of the successful performed Inter RNC SHO (to or within the drift RNC) with service type CSD.

Calculation

```
vsum (NumInterRNCSHOAtt_CSD, -1.0 * NumInterRNCSHOFail_CSD, 0) * 100.0 /
NumInterRNCSHOAtt_CSD
```

Inter_RNC_SHO_Success_Rate_CSD_and_PS

The Inter RNC SHO Success Rate for CS Data combined with any PS data rate is the percentage of the successful performed Inter RNC SHO with service type CSD and PS.

Calculation

```
vsum (NumInterRNCSHOAtt_CSDandPS, -1.0 * NumInterRNCSHOFail_CSDandPS, 0) *
100.0 / NumInterRNCSHOAtt_CSDandPS
```

Inter_RNC_SHO_Success_Rate_CSV

The Performed Inter RNC SHO Success Rate for CSV is the percentage of the successful performed Inter RNC SHO with service type CSV.

Calculation

```
vsum (NumInterRNCSHOAtt_CSV, -1.0 * NumInterRNCSHOFail_CSV, 0) * 100.0 /
NumInterRNCSHOAtt_CSV
```

Inter_RNC_SHO_Success_Rate_CSV_and_PS

The Inter RNC SHO Success Rate for CS Voice combined with any PS data rate is the percentage of the successful performed Inter RNC SHO with service type CSV and PS.

Calculation

```
vsum (NumInterRNCSHOAtt_CSVandPS, -1.0 * NumInterRNCSHOFail_CSVandPS, 0) *
100.0 / NumInterRNCSHOAtt_CSVandPS
```

Inter_RNC_SHO_Success_Rate_High_Datarate

The Inter RNC SHO Success Rate for High Datarate is the percentage of the successful performed Inter RNC SHO with service type PS with Datarate > 64k.

Calculation

```
vsum (NumInterRNCSHOAtt_PS_HighData, -1.0 * NumInterRNCSHOFail_PS_HighData,
0) * 100.0 / NumInterRNCSHOAtt_PS_HighData
```

Inter_RNC_SHO_Success_Rate_Low_Datarate

The Inter RNC SHO Success Rate for Low Datarate is the percentage of the successful performed Inter RNC SHO with service type PS with Datarate <= 64k.

Calculation

```
vsum (NumInterRNCSHOAtt_PS_LowData, -1.0 * NumInterRNCSHOFail_PS_LowData,
0) * 100.0 / NumInterRNCSHOAtt_PS_LowData
```

Inter_RNC_SHO_Success_Rate_Signalling

The Inter RNC SHO Success Rate for Signalling is the percentage of the successful performed Inter RNC SHO for Signalling.

Calculation

```
vsum (NumInterRNCSHOAtt_Signalling, -1.0 * NumInterRNCSHOFail_Signalling,
0) * 100.0 / NumInterRNCSHOAtt_Signalling
```

InterFrequency_Hard_Handover_Failure_Rate_Quality_ConfigUnsupported

This KPI provides the failure rate for inter-frequency hard handovers due to quality failed due to unsupported configuration.

Calculation

```
HHO_FailInterFreq_Qual_ConfigUnsupported * 100.0 / HHO_AttInterFreq_Qual
```

InterFrequency_Hard_Handover_Failure_Rate_Quality_PhysChanFail

This KPI provides the failure rate for inter-frequency hard handovers due to quality failed due to a physical channel failure.

Calculation

```
HHO_FailInterFreq_Qual_PhysChanFail * 100.0 / HHO_AttInterFreq_Qual
```

InterFrequency_Hard_Handover_Failure_Rate_Quality_ProcTimeout

This KPI provides the failure rate for inter-frequency hard handovers due to quality failed due to a procedure timeout.

Calculation

```
HHO_FailInterFreq_Qual_ProcTimeout * 100.0 / HHO_AttInterFreq_Qual
```

InterFrequency_Hard_Handover_Failure_Rate_Quality_ProtErr

This KPI provides the failure rate for inter-frequency hard handovers due to quality failed due to a protocol error.

Calculation

```
HHO_FailInterFreq_Qual_ProtErr * 100.0 / HHO_AttInterFreq_Qual
```

Updated: 2009-06-23

InterFrequency_Hard_Handover_Success_Rate_Quality

This KPI provides the success rate for inter-frequency hard handovers due to quality of the used frequency.

Calculation

```
vsum (HHO_AttInterFreq_Qual, -1.0 * HHO_FailInterFreq_Qual_sum, 0) * 100.0
/ HHO_AttInterFreq_Qual
```

MeanNbrRABCellDCH_Bgrd_DCH

New name:RAB_MeanCellDCH_Bgrd_DCH.Mean number of PS RABs in Cell_DCH with QoS class Background mapped on DCH

Calculation

```
RAB_MeanCellDCH_Bgrd_DCH
```

MeanNbrRABCellDCH_Intact_DCH

New name:RAB_MeanCellDCH_Intact_DCH.Mean number of PS RABs in Cell_DCH with QoS class Interactive mapped on DCH

Calculation

```
RAB_MeanCellDCH_Intact_DCH
```

MeanNbrRABCellDCH_PS128DL

New name:RAB_MeanCellDCH_PS128DL.Mean number of RABs in Cell_DCH for Service Type PS 128 kbps DL

Calculation

```
RAB_MeanCellDCH_PS128DL
```

MeanNbrRABCellDCH_PS128UL

New name:RAB_MeanCellDCH_PS128UL.Mean number of RABs in Cell_DCH for Service Type PS 128 kbps UL

Calculation

```
RAB_MeanCellDCH_PS128UL
```

MeanNbrRABCellDCH_PS32DL

New name:RAB_MeanCellDCH_PS32DL.Mean number of RABs in Cell_DCH for Service Type PS 32 kbps DL

Calculation

```
RAB_MeanCellDCH_PS32DL
```

MeanNbrRABCellDCH_PS32UL

New name:RAB_MeanCellDCH_PS32UL.Mean number of RABs in Cell_DCH for Service Type PS 32 kbps UL

Calculation

```
RAB_MeanCellDCH_PS32UL
```

MeanNbrRABCellDCH_PS384DL

New name:RAB_MeanCellDCH_PS384DL.Mean number of RABs in Cell_DCH for Service Type PS 384 kbps DL

Calculation

```
RAB_MeanCellDCH_PS384DL
```

MeanNbrRABCellDCH_PS64DL

New name:RAB_MeanCellDCH_PS64DL.Mean number of RABs in Cell_DCH for Service Type PS 64 kbps DL

Calculation

```
RAB_MeanCellDCH_PS64DL
```

MeanNbrRABCellDCH_PS64UL

New name:RAB_MeanCellDCH_PS64UL.Mean number of RABs in Cell_DCH for Service Type PS 64 kbps UL

Calculation

```
RAB_MeanCellDCH_PS64UL
```

MeanNbrRABCellDCH_PS8DL

New name:RAB_MeanCellDCH_PS8DL.Mean number of RABs in Cell_DCH for Service Type PS 8 kbps DL

Calculation

```
RAB_MeanCellDCH_PS8DL
```

MeanNbrRABCellDCH_PS8UL

New name:RAB_MeanCellDCH_PS8UL.Mean number of RABs in Cell_DCH for Service Type PS 8 kbps UL

Calculation

```
RAB_MeanCellDCH_PS8UL
```

MeanNbrRABCellDCH_Strm_DCH

New name:RAB_MeanCellDCH_Strm_DCH.Mean number of PS RABs in Cell_DCH with QoS Class Streaming mapped on DCH

Calculation

```
RAB_MeanCellDCH_Strm_DCH
```

NUMDAYS

of days in Report

Calculation

```
DAYSINREPORT()
```

NUMHOURS

of hours in Summation Data

Calculation

NumInterRNCSHOAtt_CSD

New name:SHO_AttRLAddUESide_InterRNC_CSD.Number of Attempted Inter-RNC Soft/Softer Handovers for Service Type CS Data

Calculation

```
SHO_AttRLAddUESide_InterRNC_CSD
```

NumInterRNCSHOAtt_CSDandPS

New name:SHO_AttRLAddUESide_InterRNC_CSDandPS.Number of Inter-RNC Soft/Softer Handover Attempts for Service Type Circuit Switched Data combined with any PS data rate

Calculation

```
SHO_AttRLAddUESide_InterRNC_CSDandPS
```

NumInterRNCSHOAtt_CSV

New name:SHO_AttRLAddUESide_InterRNC_CSV.Number of Attempted Inter-RNC Soft/Softer Handovers for CS Voice

Calculation

```
SHO_AttRLAddUESide_InterRNC_CSV
```

NumInterRNCSHOAtt_CSVandPS

New name:SHO_AttRLAddUESide_InterRNC_CSVandPS.Number of Inter-RNC Soft/Softer Handover Attempts for Service Type Circuit Switched Voice combined with any PS data rate

Calculation

```
SHO_AttRLAddUESide_InterRNC_CSVandPS
```

NumInterRNCSHOAtt_PS_HighData

New name:SHO_AttRLAddUESide_InterRNC_PSHighData.Number of Attempted Inter-RNC Soft/Softer Handovers for PS with high data rate, >64kbps

Calculation

```
SHO_AttRLAddUESide_InterRNC_PSHighData
```

NumInterRNCSHOAtt_PS_LowData

New name:SHO_AttRLAddUESide_InterRNC_PSLowData.Number of Attempted Inter-RNC Soft/Softer Handovers for PS with low data rate, <=64kbps

Calculation

```
SHO_AttRLAddUESide_InterRNC_PSLowData
```

NumInterRNCSHOAtt_Signalling

New name:SHO_AttRLAddUESide_InterRNC_Signalling.Number of Attempted Inter-RNC Soft/Softer Handovers for signalling

Calculation

```
SHO_AttRLAddUESide_InterRNC_Signalling
```

NumInterRNCSHOFail_CSD

New name:SHO_FailRLAddUESide_InterRNC_CSD.Number of Failed Inter-RNC Soft/Softer Handover Attempts for Service Type CS Data

Calculation

```
SHO_FailRLAddUESide_InterRNC_CSD
```

NumInterRNCSHOFail_CSDandPS

New name:SHO_FailRLAddUESide_InterRNC_CSDandPS.Number of Failed Inter-RNC Soft/Softer Handover Attempts for Service Type CS Data combined with PS (any Data Rate)

Calculation

```
SHO_FailRLAddUESide_InterRNC_CSDandPS
```

NumInterRNCSHOFail_CSV

New name:SHO_FailRLAddUESide_InterRNC_CSV.Number of Failed Inter-RNC Soft/Softer Handover Attempts for CS Voice

Calculation

```
SHO_FailRLAddUESide_InterRNC_CSV
```

NumInterRNCSHOFail_CSVandPS

New name:SHO_FailRLAddUESide_InterRNC_CSVandPS.Number of Failed Inter-RNC Soft/Softer Handover Attempts for Service Type Circuit Switched Voice combined with any PS data rate

Calculation

```
SHO_FailRLAddUESide_InterRNC_CSVandPS
```

NumInterRNCSHOFail_PS_HighData

New name:SHO_FailRLAddUESide_InterRNC_PSHighData.Number of Failed Inter-RNC Soft/Softer Handover Attempts for PS with high data rate, >64kbps

Calculation

```
SHO_FailRLAddUESide_InterRNC_PSHighData
```

NumInterRNCSHOFail_PS_LowData

New name:SHO_FailRLAddUESide_InterRNC_PSLowData.Number of Failed Inter-RNC Soft/Softer Handover Attempts for PS with low data rate, <=64kbps

Calculation

```
SHO_FailRLAddUESide_InterRNC_PSLowData
```

NumInterRNCSHOFail_Signalling

New name:SHO_FailRLAddUESide_InterRNC_Signalling.Number of Failed Inter-RNC Soft/Softer Handover Attempts for signalling

Calculation

```
SHO_FailRLAddUESide_InterRNC_Signalling
```

NumRBReconfAtt_DCH_Inc

New name:DataRateAtt_Inc.Number of Data Rate Reconfiguration Attempts made by the RNC in Cell DCH to increase the data rate

Calculation

```
DataRateAtt_Inc
```

Updated: 2009-06-23

NumRBReconfAtt_DCH_PCH

New name:UEStateTransAtt_DCH_PCH.Number of attempted RB reconfigurations to move a UE from Cell DCH to URA PCH

Calculation

```
UEStateTransAtt_DCH_PCH
```

NumRBReconfAtt_HSDSCH_DCH_sum

New name:RB_ReconfAtt_HSDSCH_DCH_sum.Total Number of RB Reconfiguration Attempts: HS-DSCH to DCH

Calculation

```
RB_ReconfAtt_HSDSCH_DCH_sum
```

NumRBReconfAtt_PCH_DCH

New name:UEStateTransAtt_PCH_DCH.Number of attempted RB reconfigurations to move a UE from URA PCH to Cell DCH

Calculation

```
UEStateTransAtt_PCH_DCH
```

NumRBReconfFail_DCH_PCH

New name:UEStateTransFail_DCH_PCH.Number of failed Cell DCH to URA PCH transitions

Calculation

```
UEStateTransFail_DCH_PCH
```

NumRBReconfFail_HSDSCH_DCH_causeDBC

New name:RB_ReconfFail_HSDSCH_DCH_causeDBC.Number of Failed RB Reconfiguration Attempts: HS-DSCH to DCH due to DBC

Calculation

```
RB_ReconfFail_HSDSCH_DCH_causeDBC
```

NumRBReconfFail_HSDSCH_DCH_sum

New name:RB_ReconfFail_HSDSCH_DCH_sum.Total Number of Failed RB Reconfiguration: HS-DSCH to DCH

Calculation

```
RB_ReconfFail_HSDSCH_DCH_sum
```

NumRBReconfFail_PCH_DCH

New name:UEStateTransFail_PCH_DCH.Number of failed URA PCH to Cell DCH transitions

Calculation

```
UEStateTransFail_PCH_DCH
```

NumRLReconfigAtt

New name:RLM_AttRLReconfig.Number of RL Reconfiguration Attempts

Calculation

```
RLM_AttRLReconfig
```

NumRLReconfigFail_DrncOther

New name:RLM_FailRLReconfig_DrncOther.Number of Failed Radio Link Reconfiguration Requests others than Lack of DRNC Resource

Calculation

```
RLM_FailRLReconfig_DrncOther
```

NumRLReconfigFail_DrncRes

New name:RLM_FailRLReconfig_DrncRes.Number of Failed Radio Link Reconfiguration Requests due to No DRNC Resource

Calculation

```
RLM_FailRLReconfig_DrncRes
```

NumRLReconfigFail_sum

New name:RLM_FailRLReconfig_sum.Number of Failed Radio Link Reconfiguration Requests

Calculation

```
RLM_FailRLReconfig_sum
```

NumRLReconfigFail_Timeout

New name:RLM_FailRLReconfig_Timeout.Number of Failed Radio Link Reconfiguration Requests due to Timeout

Calculation

```
RLM_FailRLReconfig_Timeout
```

NumRRCConnDrop_CellReselDRNC

New name:MM_RRC_ConnDrop_CellReselDRNC.Number of Pre-emptively Dropped RRC Connection due to DRNC move in URA_PCH

Calculation

```
MM_RRC_ConnDrop_CellReselDRNC
```

NumRRCConnDrop_HSDSCH_DCH

New name:MM_RRC_ConnDrop_HSDSCH_DCH.Number of Dropped RRC Connections during HS-DSCH to DCH reconfiguration.

Calculation

```
MM_RRC_ConnDrop_HSDSCH_DCH
```

NumRRCConnDrop_Non_URA_PCH_timeout

New name:MM_RRC_ConnDrop_UE_Inactivity.Number of dropped RRC Connections due to non-URA_PCH timeout

Calculation

```
MM_RRC_ConnDrop_UE_Inactivity
```

RAB_FailEstabPS_DataRateGT384

New name:RAB_FailEstabPSNoQueuing_DataRateGT384.Number of RAB Establishment Failures for PS > 384 kbps

Calculation

```
RAB_FailEstabPSNoQueuing_DataRateGT384
```

RAB_FailEstabPS_DataRateGT64LE384

New name:RAB_FailEstabPSNoQue_DataRateGT64LE384.Number of RAB Establishment Failures for PS data rates 64<x<=384 kbps

Calculation

```
RAB_FailEstabPSNoQue_DataRateGT64LE384
```

RAB_FailEstabPS_DataRateLE64

New name:RAB_FailEstabPSNoQueuing_DataRateLE64.Number of RAB Establishment Failures for PS data rates <= 64 kbps

Calculation

```
RAB_FailEstabPSNoQueuing_DataRateLE64
```

Radio_Link_Addition_Success_Rate_on_Iur

This KPI provides the performance of the radio link addition procedure on the Iur per target DRNC.

Calculation

```
vsum (SHO_AttRLAddIurUTRANSide, -1.0 * SHO_FailRLSetupIurUTRANSide_sum, 0)
* 100.0 / SHO_AttRLAddIurUTRANSide
```

Radio_Link_Setup_Success_Rate_on_Iur

This KPI provides the percentage of the radio link setup attempts on the DRNC for all service types that have been successfully set up during the Radio Link establishment procedure over the Iur interface. The number of successful radio link reconfigurations or successful radio link additions is not measured here.

Calculation

```
vsum (SHO_AttRLSetupIurUTRANSide, -1.0 * SHO_FailRLSetupIurUTRANSide_sum,
0) * 100.0 / SHO_AttRLSetupIurUTRANSide
```

RL_Reconfiguration_Failure_Rate_DRNC_Resource

This KPI provides the percentage of the RL reconfiguration attempts on the DRNC that failed due to missing DRNC resource indicating lack of resource in the DRNC.

Calculation

```
NumRLReconfigFail_DrncRes * 100.0 / NumRLReconfigAtt
```

RL_Reconfiguration_Failure_Rate_Timeout

This KPI provides the percentage of the RL reconfiguration attempts that failed due to timeout (T1 or T4 expiry).

Calculation

```
NumRLReconfigFail_Timeout * 100.0 / NumRLReconfigAtt
```

SHO_AttRLAddIurUTRANSide

New name:RLM_AttRLAddIur.Attempted Radio Link Additions on Iur (UTRAN side)

Calculation

```
RLM_AttRLAddIur
```

SHO_AttRLSetupIurUTRANSide

New name:RLM_AttRLSetupIur.Attempted Radio Link Setups on Iur (UTRAN side)

Calculation

```
RLM_AttRLSetupIur
```

SHO_FailRLAddIurUTRANSide_sum

New name:RLM_FailRLAddIur_sum.Failed Radio Link Addition Attempts on Iur (UTRAN side) due to all causes

Calculation

```
RLM_FailRLAddIur_sum
```

SHO_FailRLAddIurUTRANSide_TransRes

New name:RLM_FailRLAddIur_TransRes.Failed Radio Link Addition Attempts on Iur (UTRAN side) due to Transmission Resources

Calculation

```
RLM_FailRLAddIur_TransRes
```

SHO_FailRLSetupIurUTRANSide_sum

New name:RLM_FailRLSetupIur_sum.Failed Radio Link Setup Attempts on Iur (UTRAN side) due to all causes

Calculation

```
RLM_FailRLSetupIur_sum
```

SHO_FailRLSetupIurUTRANSide_TransRes

New name:RLM_FailRLSetupIur_TransRes.Failed Radio Link Setup Attempts on Iur (UTRAN side) due to Transmission Resources

Calculation

```
RLM_FailRLSetupIur_TransRes
```

Total_Inter_RNC_SHO_Success_Rate

The Total Inter RNC SHO Success Rate is the percentage of the successful performed Inter RNC SHO.

Calculation

```
(vsum (NumInterRNCSHOAtt_CSV, NumInterRNCSHOAtt_CSD,
NumInterRNCSHOAtt_CSVandPS, NumInterRNCSHOAtt_CSDandPS,
NumInterRNCSHOAtt_PS_LowData, NumInterRNCSHOAtt_PS_HighData,
NumInterRNCSHOAtt_Signalling, 0) - vsum (NumInterRNCSHOFail_CSV,
NumInterRNCSHOFail_CSD, NumInterRNCSHOFail_CSVandPS,
NumInterRNCSHOFail_CSDandPS, NumInterRNCSHOFail_PS_LowData,
NumInterRNCSHOFail_PS_HighData, NumInterRNCSHOFail_Signalling, 0)) * 100.0
/ vsum (NumInterRNCSHOAtt_CSV, NumInterRNCSHOAtt_CSD,
NumInterRNCSHOAtt_CSVandPS, NumInterRNCSHOAtt_CSDandPS,
NumInterRNCSHOAtt_PS_LowData, NumInterRNCSHOAtt_PS_HighData,
NumInterRNCSHOAtt_Signalling)
```

Updated: 2009-06-23

Total_Number_of_Inter_RNC_SHO_Attempts

The total number of inter RNC SHO attempts is calculated by summing up all inter RNC SHO attempts per RL type.

Calculation

```
vsum (NumInterRNCSHOAtt_CSV, NumInterRNCSHOAtt_CSD,
NumInterRNCSHOAtt_CSVandPS, NumInterRNCSHOAtt_CSDandPS,
NumInterRNCSHOAtt_PS_LowData, NumInterRNCSHOAtt_PS_HighData,
NumInterRNCSHOAtt_Signalling, 0)
```

Total_Number_of_Inter_RNC_SHO_Failures

The total number of inter RNC SHO failures is calculated by summing up all inter RNC SHO failures per RL type.

Calculation

```
vsum (NumInterRNCSHOFail_CSV, NumInterRNCSHOFail_CSD,
NumInterRNCSHOFail_CSVandPS, NumInterRNCSHOFail_CSDandPS,
NumInterRNCSHOFail_PS_LowData, NumInterRNCSHOFail_PS_HighData,
NumInterRNCSHOFail_Signalling, 0)
```

Total_Radio_Link_Establishment_Success_Rate_on_Iur

The Total Radio Link Establishment Success Rate on Iur is the ratio between the completed Radio Link setup attempts due call setup request plus the successful radio link addition attempts against the setup attempts due to call setup attempt plus the addition attempts aggregated over all service types on the Iur.

Calculation

```
vsum (SHO_AttRLSetupIurUTRANSide, SHO_AttRLAddIurUTRANSide, -1.0 *
SHO_FailRLSetupIurUTRANSide_sum, -1.0 * SHO_FailRLAddIurUTRANSide_sum) *
100.0 / vsum (SHO_AttRLSetupIurUTRANSide, SHO_AttRLAddIurUTRANSide)
```

Total_Radio_Link_Reconfiguration_Success_Rate_NeighborRNC

The Total Radio Link Reconfiguration Success Rate (Neighbor RNC) is the percentage of the radio link reconfigurations attempts on a Drift RNC that have been successful during the call setup, data rate change or change to compressed mode for all traffic types.

Calculation

```
vsum (NumRLReconfigAtt, -1.0 * NumRLReconfigFail_sum, 0) * 100.0 / NumRLRe-
configAtt
```

UE_Data_Rate_Reconfiguration_Success_Rate

The 'UE Data Rate Reconfiguration Success Rate' is the percentage of UEs in Cell_DCH successfully being reconfigured to a higher or lower data rate.

Calculation

```
vsum (NumRBReconfAtt_DCH_Inc, NumRBReconfAtt_DCH_Dec, -1.0 *
NumRBReconfFail_DCH_Fail, 0) * 100.0 / vsum (NumRBReconfAtt_DCH_Inc,
NumRBReconfAtt_DCH_Dec)
```

UE_DCH_to_HSDSCH_Reconfiguration_Failure_Rate_due_to_Resource_Shortage

The 'UE HSDSCH to DCH Reconfiguration Failure Rate due to Resource Shortage' provides the percentage of failed UE HSDSCH to DCH reconfiguration attempts caused by resource shortage found by Dynamic Bearer Control Procedure (DBC).

Calculation

```
NumRBReconfFail_HSDSCH_DCH_causeDBC * 100.0 / NumRBReconfAtt_HSDSCH_DCH_sum
```

UE_HSDSCH_to_DCH_Reconfiguration_Success_Rate

The 'UE HSDSCH to DCH Reconfiguration Success Rate' provides the percentage of successfully performed UE HSDSCH to DCH reconfiguration attempts.

Calculation

```
vsum (NumRBReconfAtt_HSDSCH_DCH_sum, -1.0 * NumRBReconfFail_HSDSCH_DCH_sum,
0) * 100.0 / NumRBReconfAtt_HSDSCH_DCH_sum
```

UE_State_Transition_Cell_DCH_to_URA_PCH_Success_Rate

The 'UE State Transition Cell_DCH to URA_PCH Success Rate' is the percentage of UE successfully transitioning from Cell_DCH to URA_PCH.

Calculation

```
vsum (NumRBReconfAtt_DCH_PCH, -1.0 * NumRBReconfFail_DCH_PCH, 0) * 100.0 /
NumRBReconfAtt_DCH_PCH
```

UE_State_Transition_URA_PCH_to_Cell_DCH_Success_Rate

The 'UE State Transition URA_PCH to Cell_DCH Success Rate' is the percentage of UE successfully transitioning from URA_PCH to Cell_DCH.

Calculation

```
vsum (NumRBReconfAtt_PCH_DCH, -1.0 * NumRBReconfFail_PCH_DCH, 0) * 100.0 /
NumRBReconfAtt_PCH_DCH
```

NeighborRNC Peg Counts

The following is a list of peg counts for the NeighborRNC entity.

_3g2gOutHoFailureNrncCsFailureRadioProc

Number of failed outgoing Handovers from 3G to 2G when reference cell is on drift RNC. (CsFailureRadioProc)

Data Source

RNC C-Node

Source Field

VS.3g2gOutHoFailureNrnc.CsFailureRadioProc

Source Section

NeighbouringRnc

_3g2gOutHoFailureNrncPsFailureRadioproc

Number of failed outgoing Handovers from 3G to 2G when reference cell is on drift RNC. (PsFailureRadioproc)

Data Source

RNC C-Node

Source Field

VS.3g2gOutHoFailureNrnc.PsFailureRadioproc

Source Section

NeighbouringRnc

_3g2gOutHoFailureNrncRelocCancel

Number of failed outgoing Handovers from 3G to 2G when reference cell is on drift RNC. (RelocCancel)

Data Source

RNC C-Node

Source Field

VS.3g2gOutHoFailureNrnc.RelocCancel

Source Section

NeighbouringRnc

_3g2gOutHoFailureNrncRelocComplFail

Number of failed outgoing Handovers from 3G to 2G when reference cell is on drift RNC. (RelocComplFail)

Data Source

RNC C-Node

Source Field

VS.3g2gOutHoFailureNrnc.RelocComplFail

Source Section

NeighbouringRnc

_3g2gOutHoFailureNrncRelocPrepOrCancel

Number of failed outgoing Handovers from 3G to 2G when reference cell is on drift RNC. (RelocPrepOrCancel)

Data Source

RNC C-Node

Source Field

VS.3g2gOutHoFailureNrnc.RelocPrepOrCancel

Source Section

NeighbouringRnc

_3g2gOutHoFailureNrncUnexpected

Number of failed outgoing Handovers from 3G to 2G when reference cell is on drift RNC. (Unexpected)

Data Source

RNC C-Node

Source Field

VS.3g2gOutHoFailureNrnc.Unexpected

Source Section

NeighbouringRnc

_3gto2gHoDetectionFromFddcellNeighbRncNoRsrcAvailCacFailure

Number of HO detection taken from fddcell at RRM level in RNC with a reference cell for which the iRNC is drift. This is in the scope of HO 3G to 2G initiation, for CS and PS (NoRsrcAvailCacFailure)

Data Source

RNC C-Node

Source Field

VS.3gto2gHoDetectionFromFddcellNeighbRnc.NoRsrcAvailCacFailure

Source Section

NeighbouringRnc

_3gto2gHoDetectionFromFddcellNeighbRncRescueCs

Number of HO detection taken from fddcell at RRM level in RNC with a reference cell for which the iRNC is drift. This is in the scope of HO 3G to 2G initiation, for CS and PS (RescueCs)

Data Source

RNC C-Node

Source Field

VS.3gto2gHoDetectionFromFddcellNeighbRnc.RescueCs

Source Section

NeighbouringRnc

_3gto2gHoDetectionFromFddcellNeighbRncRescuePs

Number of HO detection taken from fddcell at RRM level in RNC with a reference cell for which the iRNC is drift. This is in the scope of HO 3G to 2G initiation, for CS and PS (RescuePs)

Data Source

RNC C-Node

Source Field

VS.3gto2gHoDetectionFromFddcellNeighbRnc.RescuePs

Source Section

NeighbouringRnc

_3gto2gOutHoSuccessNrnc3gTo2GOutGoHoNrncRsnNoRsrcCs

Number of successful outgoing Hard Handovers from 3G to 2G when reference cell is on drift RNC (3gTo2GOutGoHoNrncRsnNoRsrcCs)

Data Source

RNC C-Node

Source Field

VS.3gto2gOutHoSuccessNrnc.3gTo2GOutGoHoNrncRsnNoRsrcCs

Source Section

NeighbouringRnc

_3gto2gOutHoSuccessNrnc3gTo2GOutGoHoNrncRsnNoRsrcPs

Number of successful outgoing Hard Handovers from 3G to 2G when reference cell is on drift RNC (3gTo2GOutGoHoNrncRsnNoRsrcPs)

Data Source

RNC C-Node

Source Field

VS.3gto2gOutHoSuccessNrnc.3gTo2GOutGoHoNrncRsnNoRsrcPs

Source Section

NeighbouringRnc

_3gto2gOutHoSuccessNrnc3gTo2GOutGoHoNrncRsnRscCs

Number of successful outgoing Hard Handovers from 3G to 2G when reference cell is on drift RNC (3gTo2GOutGoHoNrncRsnRscCs)

Data Source

RNC C-Node

Source Field

VS.3gto2gOutHoSuccessNrnc.3gTo2GOutGoHoNrncRsnRscCs

Source Section

NeighbouringRnc

_3gto2gOutHoSuccessNrnc3gTo2GOutGoHoNrncRsnRscPs

Number of successful outgoing Hard Handovers from 3G to 2G when reference cell is on drift RNC (3gTo2GOutGoHoNrncRsnRscPs)

Data Source

RNC C-Node

Source Field

VS.3gto2gOutHoSuccessNrnc.3gTo2GOutGoHoNrncRsnRscPs

Source Section

NeighbouringRnc

AmrRateReconfig5p9AttNeighbRnc

Number of voice RB Reconfiguration attempts from AMR5.9 to AMR12.2 due to PS RAB addition. (NeighbRnc)

Data Source

RNC C-Node

Source Field

VS.AmrRateReconfig5p9.Att.NeighbRnc

Source Section

NeighbouringRnc

AmrRateReconfig5p9SuccNeighbRnc

Number of successful voice RB Reconfigurations from AMR5.9 to AMR12.2 due to PS RAB addition (NeighbRnc)

Data Source

RNC C-Node

Source Field

VS.AmrRateReconfig5p9.Succ.NeighbRnc

Source Section

NeighbouringRnc

AttServCellChangeHSDSCH

Attempted Serving HS-DSCH Cell Changes

Data Source

RNC

Source Field

VS.AttServCellChangeHSDSCH

Source Section

RncFunction

Data_interval

Data interval for the RNC data collection in seconds. It is taken from the relevant <gp> tag in the RNC XML data file.

Data Source

RNC

Source Field

<gp> tag

DataRateAtt_Dec_CongControl

Attempts to Decrease the Data Rate due to Congestion Control

Data Source

RNC

Source Field

VS.DataRateAtt.Dec.CongControl

Source Section

Data Rate Modification Performance Measurements

DataRateAtt_Dec_CSDestab

Attempts to Decrease the Data Rate due to CSD Establishment

Data Source

RNC

Source Field

VS.DataRateAtt.Dec.CSDestab

Source Section

Data Rate Modification Performance Measurements

DataRateAtt_Dec_QoSDBC

Attempts to Decrease the Data Rate due to QoS based DBC Downgrade

Data Source

RNC

Source Field

VS.DataRateAtt.Dec.QoSDBC

Source Section

Data Rate Modification Performance Measurements

DataRateAtt_Dec_Qual

Attempts to Decrease the Data Rate due to Quality

Data Source

RNC

Source Field

VS.DataRateAtt.Dec.Qual

Source Section

Data Rate Modification Performance Measurements

DataRateAtt_Dec_RABMod

Attempts to Decrease the RB Data Rate due to RAB Modification

Data Source

RNC

Source Field

VS.DataRateAtt.Dec.RABMod

Source Section

Data Rate Modification Performance Measurements

DataRateAtt_Dec_Traffic

Attempts to Decrease the Data Rate due to Decreased Traffic Amount

Data Source

RNC

Source Field

VS.DataRateAtt.Dec.Traffic

Source Section

Data Rate Modification Performance Measurements

DataRateAtt_Inc

Number of Data Rate Reconfiguration Attempts made by the RNC in Cell DCH to increase the data rate

Data Source

RNC

Source Field

VS.DataRateAtt.Inc

Source Section

Data Rate Modification Performance Measurements

DataRateAtt_Inc_CSV

Attempted Increase of CSV Data Rate (AMR Codec Change)

Data Source

RNC

Source Field

VS.DataRateAtt.Inc.CSV

Source Section

Speech Codecs

DataRateAttDecRABModNeighbRnc

The number of attempts to decrease the data rate on the RB initiated by an RNC RAB Modification Request per Neighboring RNC. (NeighbRnc)

Data Source

RNC C-Node

Source Field

VS.DataRateAtt.Dec.RABMod.NeighbRnc

Source Section

NeighbouringRnc

DataRateFail_Dec_RABMod

Failed Attempts to Modify the RB Data Rate due to RAB Modification

Data Source

RNC

Source Field

VS.DataRateFail.Dec.RABMod

Source Section

Data Rate Modification Performance Measurements

DataRateFail_FailMsg

Number of Failed Data Rate Modification Attempts - Transport Channel Reconfiguration Failure Message received

Data Source

RNC

Source Field

VS.DataRateFail.FailMsg

Source Section

Data Rate Modification Performance Measurements

DataRateFail_Timeout

Number of Failed Data Rate Modification Attempts - Timeout

Data Source

RNC

Source Field

VS.DataRateFail.Timeout

Source Section

Data Rate Modification Performance Measurements

DataRateFailDecRABModNeighbRnc

The number of failed attempts to modify the data rate on the RB, where the data rate modification is initiated by a RNC initiated RAB Modification. (NeighbRnc)

Data Source

RNC C-Node

Source Field

VS.DataRateFail.Dec.RABMod.NeighbRnc

Source Section

NeighbouringRnc

DataRateSucc_Inc_CSV

Successful Increase of CSV Data Rate (AMR Codec Change)

Data Source

RNC

Source Field

VS.DataRateSucc.Inc.CSV

Source Section

Speech Codecs

DownsizingStep1SuccessNeighbRncDchHsdpa

Number of successful downsizing to always on step1 for communication which reference cell is on a drift RNC. This counter is screened according to the source downlink ASConfId (DchHsdpa)

Data Source

RNC C-Node

Source Field

VS.DownsizingStep1SuccessNeighbRnc.DchHsdpa

Source Section

NeighbouringRnc

DownsizingStep1SuccessNeighbRncDchOther

Number of successful downsizing to always on step1 for communication which reference cell is on a drift RNC. This counter is screened according to the source downlink ASConfId (DchOther)

Data Source

RNC C-Node

Source Field

VS.DownsizingStep1SuccessNeighbRnc.DchOther

Source Section

NeighbouringRnc

DownsizingStep1SuccessNeighbRncDchPsIb128

Number of successful downsizing to always on step1 for communication which reference cell is on a drift RNC. This counter is screened according to the source downlink ASConfId (DchPsIb128)

Data Source

RNC C-Node

Source Field

VS.DownsizingStep1SuccessNeighbRnc.DchPsIb128

Source Section

NeighbouringRnc

DownsizingStep1SuccessNeighbRncDchPsIb256

Number of successful downsizing to always on step1 for communication which reference cell is on a drift RNC. This counter is screened according to the source downlink ASConfId (DchPsIb256)

Data Source

RNC C-Node

Source Field

VS.DownsizingStep1SuccessNeighbRnc.DchPsIb256

Source Section

NeighbouringRnc

DownsizingStep1SuccessNeighbRncDchPsIb384

Number of successful downsizing to always on step1 for communication which reference cell is on a drift RNC. This counter is screened according to the source downlink ASConfId (DchPsIb384)

Data Source

RNC C-Node

Source Field

VS.DownsizingStep1SuccessNeighbRnc.DchPsIb384

Source Section

NeighbouringRnc

DownsizingStep1SuccessNeighbRncDchPsIb64

Number of successful downsizing to always on step1 for communication which reference cell is on a drift RNC. This counter is screened according to the source downlink ASConfId (DchPsIb64)

Data Source

RNC C-Node

Source Field

VS.DownsizingStep1SuccessNeighbRnc.DchPsIb64

Source Section

NeighbouringRnc

DownsizingStep1SuccessNeighbRncDchPsIbLt64

Number of successful downsizing to always on step1 for communication which reference cell is on a drift RNC. This counter is screened according to the source downlink ASConfId (DchPsIbLt64)

Data Source

RNC C-Node

Source Field

VS.DownsizingStep1SuccessNeighbRnc.DchPsIbLt64

Source Section

NeighbouringRnc

DownsizingStep1UnsuccessNeighbRncDchHsdpa

Number of unsuccessful downsizing to always on step1 for communication which reference cell is on a drift RNC. This counter is screened according to the source downlink ASConfId (DchHsdpa)

Data Source

RNC C-Node

Source Field

VS.DownsizingStep1UnsuccessNeighbRnc.DchHsdpa

Source Section

NeighbouringRnc

DownsizingStep1UnsuccessNeighbRncDchOther

Number of unsuccessful downsizing to always on step1 for communication which reference cell is on a drift RNC. This counter is screened according to the source downlink ASConfId (DchOther)

Data Source

RNC C-Node

Source Field

VS.DownsizingStep1UnsuccessNeighbRnc.DchOther

Source Section

NeighbouringRnc

DownsizingStep1UnsuccessNeighbRncDchPsIb128

Number of unsuccessful downsizing to always on step1 for communication which reference cell is on a drift RNC. This counter is screened according to the source downlink ASConfId (DchPsIb128)

Data Source

RNC C-Node

Source Field

VS.DownsizingStep1UnsuccessNeighbRnc.DchPsIb128

Source Section

NeighbouringRnc

DownsizingStep1UnsuccessNeighbRncDchPsIb256

Number of unsuccessful downsizing to always on step1 for communication which reference cell is on a drift RNC. This counter is screened according to the source downlink ASConfId (DchPsIb256)

Data Source

RNC C-Node

Source Field

VS.DownsizingStep1UnsuccessNeighbRnc.DchPsIb256

Source Section

NeighbouringRnc

DownsizingStep1UnsuccessNeighbRncDchPsIb384

Number of unsuccessful downsizing to always on step1 for communication which reference cell is on a drift RNC. This counter is screened according to the source downlink ASConfId (DchPsIb384)

Data Source

RNC C-Node

Source Field

VS.DownsizingStep1UnsuccessNeighbRnc.DchPsIb384

Source Section

NeighbouringRnc

DownsizingStep1UnsuccessNeighbRncDchPsIb64

Number of unsuccessful downsizing to always on step1 for communication which reference cell is on a drift RNC. This counter is screened according to the source downlink ASConfId (DchPsIb64)

Data Source

RNC C-Node

Source Field

VS.DownsizingStep1UnsuccessNeighbRnc.DchPsIb64

Source Section

NeighbouringRnc

DownsizingStep1UnsuccessNeighbRncDchPsIbLt64

Number of unsuccessful downsizing to always on step1 for communication which reference cell is on a drift RNC. This counter is screened according to the source downlink ASConfId (DchPsIbLt64)

Data Source

RNC C-Node

Source Field

VS.DownsizingStep1UnsuccessNeighbRnc.DchPsIbLt64

Source Section

NeighbouringRnc

DownsizingStep2SuccessNeighbRncDwnStp2CellFach

Number of successful communication release, due to a transition to always on step2, for communication which reference cell is on a drift RNC. This counter is screened according to the source downlink ASConfId. This counter is "Always 0" (not used) when the xPCH feature is active. Cell FACH screening will always be zero since cell FACH is not supported over the IUR. (DwnStp2CellFach)

Data Source

RNC C-Node

Source Field

VS.DownsizingStep2SuccessNeighbRnc.DwnStp2CellFach

Source Section

NeighbouringRnc

DownsizingStep2SuccessNeighbRncDwnStp2DchPsIb0

Number of successful communication release, due to a transition to always on step2, for communication which reference cell is on a drift RNC. This counter is screened according to the source downlink ASConfId. This counter is "Always 0" (not used) when the xPCH feature is active. Cell FACH screening will always be zero since cell FACH is not supported over the IUR. (DwnStp2DchPsIb0)

Data Source

RNC C-Node

Source Field

VS.DownsizingStep2SuccessNeighbRnc.DwnStp2DchPsIb0

Source Section

NeighbouringRnc

DownsizingStep2SuccessNeighbRncDwnStp2DchPsIb8

Number of successful communication release, due to a transition to always on step2, for communication which reference cell is on a drift RNC. This counter is screened according to the source downlink ASConfId. This counter is "Always 0" (not used) when the xPCH feature is active. Cell FACH screening will always be zero since cell FACH is not supported over the IUR. (DwnStp2DchPsIb8)

Data Source

RNC C-Node

Source Field

VS.DownsizingStep2SuccessNeighbRnc.DwnStp2DchPsIb8

Source Section

NeighbouringRnc

DownsizingStep2SuccessNeighbRncDwnStp2Other

Number of successful communication release, due to a transition to always on step2, for communication which reference cell is on a drift RNC. This counter is screened according to the source downlink ASConfId. This counter is "Always 0" (not used) when the xPCH feature is active. Cell FACH screening will always be zero since cell FACH is not supported over the IUR. (DwnStp2Other)

Data Source

RNC C-Node

Source Field

VS.DownsizingStep2SuccessNeighbRnc.DwnStp2Other

Source Section

NeighbouringRnc

FailServCellChgHSDSCH_TransChnRecfgFail

Failed Serving HS-DSCH Cell Changes. The RNC receives a TRANSPORT CHANNEL RECONFIGURATION FAILURE message from the UE

Data Source

RNC

Source Field

VS.FailServCellChangeHSDSCH.TransChnReconfigFail

Source Section

RncFunction

FailServCellChgHSDSCH_TransChnRecfgTout

Failed Serving HS-DSCH Cell Changes. Timer expiry due to no TRANSPORT CHANNEL RECONFIGURATION COMPLETE message received from the UE

Data Source

RNC

Source Field

VS.FailServCellChangeHSDSCH.TransChnReconfigTout

Source Section

RncFunction

HHO_AttInterFreq_Qual

Succeeded by:HHO_AttPrepOutInterFreq_Qual. Attempted inter-frequency hard handovers due to quality

Data Source

RNC

Source Field

HHO.AttInterFreq.Qual

Source Section

Quality based inter-frequency hard handover

HHO_AttOutInterFreq_Qual

Attempted outgoing inter-frequency hard handovers due to quality is initiated by sending of the RRC messages to the UE: PHYSICAL CHANNEL RECONFIGURATION, TRANSPORT CHANNEL RECONFIGURATION, RADIO BEARER RECONFIGURATION

Data Source

RNC

Source Field

HHO.AttOutInterFreq.Qual

Source Section

Quality based inter-frequency hard handover

HHO_AttPrepOutInterFreq_Qual

Attempted preparations for outgoing inter-frequency hard handovers due to quality

Data Source

RNC

Source Field

VS.HHO.AttPrepOutInterFreq.Qual

Source Section

Quality based inter-frequency hard handover

HHO_AttPrepOutInterFreq_Qual_RSCP

Attempted preparations for outgoing inter-frequency hard handovers - quality due to RSCP - NeighborRNC

Data Source

RNC

Source Field

VS.HHO.AttPrepOutInterFreq.Qual.RSCP

Source Section

Quality based inter-frequency hard handover

HHO_FailInterFreq_Qual_ConfigUnsupported

Failed inter-frequency hard handovers due to quality due to Configuration is unsupported

Data Source

RNC

Source Field

HHO.FailInterFreq.Qual.ConfigUnsupported

Source Section

Quality based inter-frequency hard handover

HHO_FailInterFreq_Qual_PhysChanFail

Failed inter-frequency hard handovers due to quality due to Physical Channel Failure

Data Source

RNC

Source Field

HHO.FailInterFreq.Qual.PhysChanFail

Source Section

Quality based inter-frequency hard handover

HHO_FailInterFreq_Qual_ProcTimeout

Retired fr 3.0.6.0.0 - Failed inter-frequency hard handovers due to quality due to Procedural Timeout

Data Source

RNC

Source Field

HHO.FailInterFreq.Qual.ProcTimeout

Source Section

Quality based inter-frequency hard handover

HHO_FailInterFreq_Qual_ProtErr

Failed inter-frequency hard handovers due to quality due to Protocol Error

Data Source

RNC

Source Field

HHO.FailInterFreq.Qual.ProtErr

Source Section

Quality based inter-frequency hard handover

HHO_FailInterFreq_Qual_sum

Failed inter-frequency hard handovers due to quality due to all causes

Data Source

RNC

Source Field

HHO.FailInterFreq.Qual.sum

Source Section

Quality based inter-frequency hard handover

HHO_FailOutInterFreq_Qual_ConfigUnsupp

Failed outgoing inter-frequency hard handovers due to quality-Cause:Configuration Unsupported

Data Source

RNC

Source Field

HHO.FailOutInterFreq.Qual.ConfigUnsupported

Source Section

Quality based inter-frequency hard handover

HHO_FailOutInterFreq_Qual_PhysChanFail

Failed outgoing inter-frequency hard handovers due to quality-Cause:Physical Channel Fail

Data Source

RNC

Source Field

HHO.FailOutInterFreq.Qual.PhysChanFail

Source Section

Quality based inter-frequency hard handover

HHO_FailOutInterFreq_Qual_ProtErr

Failed outgoing inter-frequency hard handovers due to quality-Cause:Protocol Error

Data Source

RNC

Source Field

HHO.FailOutInterFreq.Qual.ProtErr

Source Section

Quality based inter-frequency hard handover

HHO_SuccOutInterFreq_Qual

Successful outgoing inter-frequency hard handovers due to quality which is indicated by receipt of one of the RRC messages sent from the UE to the source RNC as a response on a channel reconfiguration attempt: PHYSICAL CHANNEL RECONFIGURATION COMPLETE,TRANSPORT CHANNEL RECONFIGURATION COMPLETE, RADIO BEARER RECONFIGURATION COMPLETE

Data Source

RNC

Source Field

HHO.SuccOutInterFreq.Qual

Source Section

Quality based inter-frequency hard handover

HHOAttOutInterFreqEcNoNeighbRnc

Attempted outgoing inter-frequency hard handovers due to insufficient Ec/No quality of the used frequency. (NeighbRnc)

Data Source

RNC C-Node

Source Field

HHO.AttOutInterFreq.EcNo.NeighbRnc

Source Section

NeighbouringRnc

HHOAttOutInterFreqNeighbRnc

Total number of attempted outgoing inter-frequency hard handovers. (NeighbRnc)

Data Source

RNC C-Node

Source Field

HHO.AttOutInterFreq.NeighbRnc

Source Section

NeighbouringRnc

HHOAttOutInterFreqRSCPNeighbRnc

Attempted outgoing inter-frequency hard handovers due to insufficient RSCP quality of the used frequency. (NeighbRnc)

Data Source

RNC C-Node

Source Field

HHO.AttOutInterFreq.RSCP.NeighbRnc

Source Section

NeighbouringRnc

HHOSuccOutInterFreqEcNoNeighbRnc

Successful outgoing inter-frequency hard handovers due to insufficient Ec/No quality of the used frequency. (NeighbRnc)

Data Source

RNC C-Node

Source Field

HHO.SuccOutInterFreq.EcNo.NeighbRnc

Source Section

NeighbouringRnc

HHOSuccOutInterFreqNeighbRnc

Total number of successful outgoing inter-frequency hard handovers. (NeighbRnc)

Data Source

RNC C-Node

Source Field

HHO.SuccOutInterFreq.NeighbRnc

Source Section

NeighbouringRnc

HHOSuccOutInterFreqRSCPNeighbRnc

Successful outgoing inter-frequency hard handovers due to insufficient RSCP quality of the used frequency. (NeighbRnc)

Data Source

RNC C-Node

Source Field

HHO.SuccOutInterFreq.RSCP.NeighbRnc

Source Section

NeighbouringRnc

InterFrequencyHoTrigByAlarmNRncCpichEcNo

Number of inter-frequency handovers with a reference cell for which the RNC is drift and the handover has been initiated because of Alarm criteria hit (CpichEcNo)

Data Source

RNC C-Node

Source Field

VS.InterFrequencyHoTrigByAlarmNRnc.CpichEcNo

Source Section

NeighbouringRnc

InterFrequencyHoTrigByAlarmNRncCpichRscp

Number of inter-frequency handovers with a reference cell for which the RNC is drift and the handover has been initiated because of Alarm criteria hit (CpichRscp)

Data Source

RNC C-Node

Source Field

VS.InterFrequencyHoTrigByAlarmNRnc.CpichRscp

Source Section

NeighbouringRnc

InterFrequencyHoTrigByAlarmNRncUeTxPowerMax

Number of inter-frequency handovers with a reference cell for which the RNC is drift and the handover has been initiated because of Alarm criteria hit (UeTxPowerMax)

Data Source

RNC C-Node

Source Field

VS.InterFrequencyHoTrigByAlarmNRnc.UeTxPowerMax

Source Section

NeighbouringRnc

IntraFreqMeasAverageOfCallEventModeNeighRncAvg

Average of Call in event mode over a period within a neighbouring RNC (Avg)

Data Source

RNC C-Node

Source Field

VS.IntraFreqMeasAverageOfCallEventModeNeighRnc.Avg

Source Section

NeighbouringRnc

IntraFreqMeasAverageOfCallEventModeNeighRncCum

Average of Call in event mode over a period within a neighbouring RNC (Cum)

Data Source

RNC C-Node

Source Field

VS.IntraFreqMeasAverageOfCallEventModeNeighRnc.Cum

Source Section

NeighbouringRnc

IntraFreqMeasAverageOfCallEventModeNeighRncMax

Average of Call in event mode over a period within a neighbouring RNC (Max)

Data Source

RNC C-Node

Source Field

VS.IntraFreqMeasAverageOfCallEventModeNeighRnc.Max

Source Section

NeighbouringRnc

IntraFreqMeasAverageOfCallEventModeNeighRncMin

Average of Call in event mode over a period within a neighbouring RNC (Min)

Data Source

RNC C-Node

Source Field

VS.IntraFreqMeasAverageOfCallEventModeNeighRnc.Min

Source Section

NeighbouringRnc

IntraFreqMeasAverageOfCallEventModeNeighRncNbEvt

Average of Call in event mode over a period within a neighbouring RNC (NbEvt)

Data Source

RNC C-Node

Source Field

VS.IntraFreqMeasAverageOfCallEventModeNeighRnc.NbEvt

Source Section

NeighbouringRnc

IntraFreqMeasAverageOfCallPeriodicModeNeighRncAvg

Average of Call in periodic mode over a period within a neighbouring RNC (Avg)

Data Source

RNC C-Node

Source Field

VS.IntraFreqMeasAverageOfCallPeriodicModeNeighRnc.Avg

Source Section

NeighbouringRnc

IntraFreqMeasAverageOfCallPeriodicModeNeighRncCum

Average of Call in periodic mode over a period within a neighbouring RNC (Cum)

Data Source

RNC C-Node

Source Field

VS.IntraFreqMeasAverageOfCallPeriodicModeNeighRnc.Cum

Source Section

NeighbouringRnc

IntraFreqMeasAverageOfCallPeriodicModeNeighRncMax

Average of Call in periodic mode over a period within a neighbouring RNC (Max)

Data Source

RNC C-Node

Source Field

VS.IntraFreqMeasAverageOfCallPeriodicModeNeighRnc.Max

Source Section

NeighbouringRnc

IntraFreqMeasAverageOfCallPeriodicModeNeighRncMin

Average of Call in periodic mode over a period within a neighbouring RNC (Min)

Data Source

RNC C-Node

Source Field

VS.IntraFreqMeasAverageOfCallPeriodicModeNeighRnc.Min

Source Section

NeighbouringRnc

IntraFreqMeasAverageOfCallPeriodicModeNeighRncNbEvt

Average of Call in periodic mode over a period within a neighbouring RNC (NbEvt)

Data Source

RNC C-Node

Source Field

VS.IntraFreqMeasAverageOfCallPeriodicModeNeighRnc.NbEvt

Source Section

NeighbouringRnc

IRATHO_AttOutCS

Attempted UMTS to GSM handovers

Data Source

RNC

Source Field

IRATHO.AttOutCS

Source Section

RncFunction

IRATHO_AttOutCS_RSCP

Attempted UMTS to GSM Handovers initiated due to RSCP

Data Source

RNC

Source Field

IRATHO.AttOutCS.RSCP

Source Section

RncFunction

IRATHO_AttOutPSUTRAN

Attempted outgoing packet switched inter-RAT handovers, UTRAN controlled

Data Source

RNC

Source Field

IRATHO.AttOutPSUTRAN

Source Section

Packet switched inter-RAT handover (Cell Change Order from UTRAN)

IRATHO_AttOutPSUTRAN_RSCP

Attempted outgoing packet switched inter-RAT handovers, UTRAN controlled initiated due to Received Signal Code Power(RSCP)

Data Source

RNC

Source Field

IRATHO.AttOutPSUTRAN.RSCP

Source Section

Packet switched inter-RAT handover (Cell Change Order from UTRAN)

IRATHO_AttRelocPrep_DirRetry

Attempted Relocation Preparations for Inter-system Directed Retry

Data Source

RNC

Source Field

VS.IRATHO.AttRelocPrep.DirRetry

Source Section

Inter-System Directed Retry

IRATHO_AttRelocPrepOutCS

Attempted relocation preparations for UMTS to GSM handover

Data Source

RNC

Source Field

IRATHO.AttRelocPrepOutCS

Source Section

RncFunction

IRATHO_FailOutCS_ConfUnaccept

Failed UMTS to GSM Handovers per Cause - Configuration unacceptable

Data Source

RNC

Source Field

IRATHO.FailOutCS.ConfUnaccept

Source Section

RncFunction

IRATHO_FailOutCS_PhyChnFail

Failed UMTS to GSM Handovers per Cause - Physical Channel Failure

Data Source

RNC

Source Field

IRATHO.FailOutCS.PhyChnFail

Source Section

RncFunction

IRATHO_FailOutCS_ProtErr

Failed UMTS to GSM Handovers per Cause - Protocol Error

Data Source

RNC

Source Field

IRATHO.FailOutCS.ProtErr

Source Section

RncFunction

IRATHO_FailOutPSUTRAN_ConfUnaccept

Failed outgoing packet switched inter-RAT handovers UTRAN controlled-Cause: Configuration unacceptable

Data Source

RNC

Source Field

IRATHO.FailOutPSUTRAN.ConfUnaccept

Source Section

Packet switched inter-RAT handover (Cell Change Order from UTRAN)

IRATHO_FailOutPSUTRAN_PhyChnFail

Failed outgoing packet switched inter-RAT handovers UTRAN controlled-Cause: Physical Channel Failure

Data Source

RNC

Source Field

IRATHO.FailOutPSUTRAN.PhyChnFail

Source Section

Packet switched inter-RAT handover (Cell Change Order from UTRAN)

IRATHO_FailOutPSUTRAN_ProtErr

Failed outgoing packet switched inter-RAT handovers UTRAN controlled-Cause: Protocol Error

Data Source

RNC

Source Field

IRATHO.FailOutPSUTRAN.ProtErr

Source Section

Packet switched inter-RAT handover (Cell Change Order from UTRAN)

IRATHO_FailOutPSUTRAN_sum

Failed outgoing packet switched inter-RAT handovers UTRAN controlled-Cause: sum

Data Source

RNC

Source Field

IRATHO.FailOutPSUTRAN.sum

Source Section

Packet switched inter-RAT handover (Cell Change Order from UTRAN)

IRATHO_FailOutPSUTRAN_Unspec

Failed outgoing packet switched inter-RAT handovers UTRAN controlled. Cause: Unspecified

Data Source

RNC

Source Field

IRATHO.FailOutPSUTRAN.Unspec

Source Section

RncFunction

IRATHO_FailRelocPrep_DirRetry_FailTarSys

Failed Relocation Preparations for Inter-system Directed Retry due to Reloaction Failure in Target System

Data Source

RNC

Source Field

VS.IRATHO.FailRelocPrep.DirRetry.FailTarSys

Source Section

Inter-System Directed Retry

IRATHO_FailRelocPrep_DirRetry_NoRRTarSys

Failed relocation preparations for inter-system directed retry-Cause:No Radio Resources Available in Target Cell

Data Source

RNC

Source Field

VS.IRATHO.FailRelocPrep.DirRetry.NoRRTarSys

Source Section

Inter-System Directed Retry

IRATHO_FailRelocPrep_DirRetryIncompRxSt

Failed relocation preparations for inter-system directed retry-Cause: Message not compatible with receiver state

Data Source

RNC

Source Field

VS.IRATHO.FailRelocPrep.DirRetry.IncompRxState

Source Section

Inter-System Directed Retry

IRATHO_FailRelocPrep_DirRetryNotSupTar

Failed relocation preparations for inter-system directed retry-Cause:Relocation not supported in Target System

Data Source

RNC

Source Field

VS.IRATHO.FailRelocPrep.DirRetry.NotSupTarSys

Source Section

Inter-System Directed Retry

IRATHO_FailRelocPrep_DirRetryT_RELOCprep

Failed relocation preparations for inter-system directed retry-Cause: T_RELOCprep expiry

Data Source

RNC

Source Field

VS.IRATHO.FailRelocPrep.DirRetry.T_RELOCprep_exp

Source Section

Inter-System Directed Retry

IRATHO_FailRelocPrep_DirRetryTarNotAllow

Failed relocation preparations for inter-system directed retry-Cause:Relocation Target not allowed

Data Source

RNC

Source Field

VS.IRATHO.FailRelocPrep.DirRetry.TarNotAllowed

Source Section

Inter-System Directed Retry

IRATHO_FailRelocPrepOutCS_AbstSyntErr

Failed relocation preparations for UMTS to GSM handover per failure cause: Abstract Syntax Error (Reject) (100)

Data Source

RNC

Source Field

IRATHO.FailRelocPrepOutCS.AbstSyntErr

Source Section

RncFunction

IRATHO_FailRelocPrepOutCS_FailTarSys

Failed relocation preparations for UMTS to GSM handover per failure cause: Relocation Failure in Target CN/RNC or Target system (29)

Data Source

RNC

Source Field

IRATHO.FailRelocPrepOutCS.FailTarSys

Source Section

RncFunction

IRATHO_FailRelocPrepOutCS_NoResAv

Failed relocation preparations for UMTS to GSM handover per failure cause: No Resource Available (114)

Data Source

RNC

Source Field

IRATHO.FailRelocPrepOutCS.NoResAv

Source Section

RncFunction

IRATHO_FailRelocPrepOutCS_NoRRTarCell

Failed relocation preparations for UMTS to GSM handover per failure cause: No Radio Resources Available in Target Cell (53)

Data Source

RNC

Source Field

IRATHO.FailRelocPrepOutCS.NoRRTarCell

Source Section

RncFunction

IRATHO_FailRelocPrepOutCS_NotSupTarSys

Failed relocation preparations for UMTS to GSM handover per failure cause: Relocation not supported in Target RNC or Target System (44)

Data Source

RNC

Source Field

IRATHO.FailRelocPrepOutCS.NotSupTarSys

Source Section

RncFunction

IRATHO_FailRelocPrepOutCS_OmInt

Failed relocation preparations for UMTS to GSM handover per failure cause: O&M Intervention (113)

Data Source

RNC

Source Field

IRATHO.FailRelocPrepOutCS.OmInt

Source Section

RncFunction

IRATHO_FailRelocPrepOutCS_RelocCanc

The number of failed relocation preparations for UMTS to GSM handover due to normal call termination.

Data Source

RNC

Source Field

IRATHO.FailRelocPrepOutCS.RelocCanc

Source Section

UMTS to GSM Handover PMs

IRATHO_FailRelocPrepOutCS_ReqCiphNotSupp

Failed relocation preparations for UMTS to GSM handover per failure cause: Requested Ciphering and/or Integrity Protection Algorithms not Supported (12)

Data Source

RNC

Source Field

IRATHO.FailRelocPrepOutCS.ReqCiphNotSupp

Source Section

RncFunction

IRATHO_FailRelocPrepOutCS_TarNotAllowed

Failed relocation preparations for UMTS to GSM handover per failure cause: Relocation Target not allowed (50)

Data Source

RNC

Source Field

IRATHO.FailRelocPrepOutCS.TarNotAllowed

Source Section

RncFunction

IRATHO_FailRelocPrepOutCS_UnspecFail

Failed relocation preparations for UMTS to GSM handover per failure cause: Unspecified Failure (115)

Data Source

RNC

Source Field

IRATHO.FailRelocPrepOutCS.UnspecFail

Source Section

RncFunction

IRATHO_SuccOutCS

Successful UMTS to GSM Handovers (outgoing)

Data Source

RNC

Source Field

IRATHO.SuccOutCS

Source Section

RncFunction

IRATHO_SuccOutCS_DirRetry

Successful Inter-system UMTS to GSM Directed Retry

Data Source

RNC

Source Field

VS.IRATHO.SuccOutCS.DirRetry

Source Section

RncFunction

IRATHO_SuccOutCS_RSCP

Successful UMTS to GSM Handovers initiated due to RSCP

Data Source

RNC

Source Field

IRATHO.SuccOutCS.RSCP

Source Section

RncFunction

IRATHO_SuccOutPSUTRAN

Successful outgoing packet switched inter-RAT handovers, UTRAN controlled

Data Source

RNC

Source Field

IRATHO.SuccOutPSUTRAN

Source Section

Packet switched inter-RAT handover (Cell Change Order from UTRAN)

IRATHO_SuccOutPSUTRAN_RSCP

Successful outgoing packet switched inter-RAT handovers, UTRAN controlled initiated due to Received Signal Code Power(RSCP)

Data Source

RNC

Source Field

IRATHO.SuccOutPSUTRAN.RSCP

Source Section

Packet switched inter-RAT handover (Cell Change Order from UTRAN)

IRATHO_SuccRelocPrep_DirRetry

Successful Relocation Preparations for Inter-system Directed Retry

Data Source

RNC

Source Field

VS.IRATHO.SuccRelocPrep.DirRetry

Source Section

Inter-System Directed Retry

IRATHO_SuccRelocPrepOutCS

Successful relocation preparations for UMTS to GSM handover

Data Source

RNC

Source Field

IRATHO.SuccRelocPrepOutCS

Source Section

RncFunction

IRATHO_TimeoutOutPSUTRAN

Outgoing packet switched inter-RAT handovers UTRAN controlled timeouts

Data Source

RNC

Source Field

VS.IRATHO.TimeoutOutPSUTRAN

Source Section

Packet switched inter-RAT handover (Cell Change Order from UTRAN)

IRATHO_TRelocOverall

UMTS to GSM handovers TRelocOverall Expiry

Data Source

RNC

Source Field

IRATHO.TRelocOverall

Source Section

RncFunction

IRATHOAttRelocPrepDirRetryNeighbRnc

Attempted relocation preparations for inter-system UMTS to GSM directed retry. (NeighbRnc)

Data Source

RNC C-Node

Source Field

VS.IRATHO.AttRelocPrep.DirRetry.NeighbRnc

Source Section

NeighbouringRnc

IRATHOAttRelocPrepOutCSNeighbRnc

Attempted relocation preparations for CS UMTS to GSM handover (CS inter-RAT Handover Attempt) from network point of view with reference cell on DRNC. (NeighbRnc)

Data Source

RNC C-Node

Source Field

IRATHO.AttRelocPrepOutCS.NeighbRnc

Source Section

NeighbouringRnc

IRATHOAttRelocPrepOutCSNextBestCellNeighbRnc

Attempted relocation preparations for CS UMTS to GSM handover to the next best GSM cell (CS inter-RAT Handover Attempt) from network point of view with reference cell on DRNC. This PM counter is similar to PM counter IRATHO_AttRelocPrepOutCS_NeighbRnc. The difference is that IRATHO_AttRelocPrepOutCS_NeighbRnc counts all defined events, but this counter counts only events that appeared at additional IRAT HO attempts as defined in TN-34230. All events that are counted by this counter are counted by IRATHO_AttRelocPrepOutCS_NeighbRnc too. This PM counter can be used to create KPIs which count attempted, successful and failing overall procedures (first and additional IRAT HO preparations). (NeighbRnc)

Data Source

RNC C-Node

Source Field

IRATHO.AttRelocPrepOutCS.NextBestCell.NeighbRnc

Source Section

NeighbouringRnc

IRATHOAttRelocPrepOutCSWPSNeighbRnc

Attempted CS IRAT relocation preparations of CAC failure initiated Directed Retries of Wireless Priority Service (WPS) calls. Only applicable in the context of Directed Retry for WPS calls. (NeighbRnc)

Data Source

RNC C-Node

Source Field

VS.IRATHO.AttRelocPrepOutCS.WPS.NeighbRnc

Source Section

NeighbouringRnc

IRATHOCancelRelocPrepDirRetryCallRelNeighbRnc

Inter-system directed retry relocation preparation procedures cancelled due to normal call termination based on Iu Release Command. (NeighbRnc)

Data Source

RNC C-Node

Source Field

VS.IRATHO.CancelRelocPrep.DirRetry.CallRel.NeighbRnc

Source Section

NeighbouringRnc

IRATHOCancelRelocPrepOutCSCallRelNeighbRnc

Relocation preparation procedures for UMTS to GSM handover cancelled due to normal call termination based on Iu Release Command. (NeighbRnc)

Data Source

RNC C-Node

Source Field

VS.IRATHO.CancelRelocPrepOutCS.CallRel.NeighbRnc

Source Section

NeighbouringRnc

Updated: 2009-06-23

IRATHOECIHOAttHONeighbRnc

This PM counts the number of Emergency calls for when an Immediate Inter-System Handover is attempted. Only applicable for the context of "Emergency Call Immediate Inter-System Handover". (NeighbRnc)

Data Source

RNC C-Node

Source Field

VS.IRATHO.ECIHO.AttHO.NeighbRnc

Source Section

NeighbouringRnc

IRATHOECIHOAttRelocPrepNeighbRnc

The number of attempted relocation preparations for Emergency Call Immediate Inter-System Handover (ECIHO). Only applicable for the context of "Emergency Call Immediate Inter-System Handover". (NeighbRnc)

Data Source

RNC C-Node

Source Field

VS.IRATHO.ECIHO.AttRelocPrep.NeighbRnc

Source Section

NeighbouringRnc

IRATHOECIHOAttRRCHONeighbRnc

The number of attempted handovers for Emergency Call Immediate Inter-System Handover (ECIHO). Only applicable for the context of "Emergency Call Immediate Inter-System Handover". (NeighbRnc)

Data Source

RNC C-Node

Source Field

VS.IRATHO.ECIHO.AttRRCHO.NeighbRnc

Source Section

NeighbouringRnc

IRATHOECIHOCancelHONeighbRnc

The number of Emergency calls for that an Immediate Inter-System Handover is cancelled by normal call release after the RAB has been successfully established and before the handover is initiated by a relocation preparation procedure. Only applicable for the context of "Emergency Call Immediate Inter-System Handover". (NeighbRnc)

Data Source

RNC C-Node

Source Field

VS.IRATHO.ECIHO.CancelHO.NeighbRnc

Source Section

NeighbouringRnc

IRATHOECIHOCancelRelocPrepNeighbRnc

The number of Emergency calls for that an Immediate Inter-System Handover is cancelled by normal call release during ongoing relocation preparation procedure. Only applicable for the context of "Emergency Call Immediate Inter-System Handover". (NeighbRnc)

Data Source

RNC C-Node

Source Field

VS.IRATHO.ECIHO.CancelRelocPrep.NeighbRnc

Source Section

NeighbouringRnc

IRATHOECIHOSuccHONeighbRnc

The number of successful Emergency Call Immediate Inter-System Handovers (ECIHO). Only applicable for the context of "Emergency Call Immediate Inter-System Handover". (NeighbRnc)

Data Source

RNC C-Node

Source Field

VS.IRATHO.ECIHO.SuccHO.NeighbRnc

Source Section

NeighbouringRnc

IRATHOFailRelocPrepDirRetryRelocCancNeighbRnc

Failed inter-system directed retry relocation preparation procedures due to relocation cancel. (NeighbRnc)

Data Source

RNC C-Node

Source Field

IRATHO.FailRelocPrep.DirRetry.RelocCanc.NeighbRnc

Source Section

NeighbouringRnc

IRATHOFailRelocPrepOutCS_TRELOCprepexp

Failed relocation preparations for UMTS to GSM handover per failure cause: T_RELOCprep expiry

Data Source

RNC

Source Field

IRATHO.FailRelocPrepOutCS.T_RELOCprep_exp

Source Section

RncFunction

IRATHOFailRelocPrepOutCS_TrLdHighTarCell

Failed relocation preparations for UMTS to GSM handover per failure cause: Traffic Load in The Target Cell Higher Than in the Source Cell (57)

Data Source

RNC

Source Field

IRATHO.FailRelocPrepOutCS.TrLdHighTarCell

Source Section

RncFunction

IRATHOFailRelocPrepOutCSNeighbRncAbstSyntErr

Failed relocation preparations for UMTS to GSM handover with reference cell on DRNC from network point of view per failure cause (AbstSyntErr)

Data Source

RNC C-Node

Source Field

IRATHO.FailRelocPrepOutCS.NeighbRnc.AbstSyntErr

Source Section

NeighbouringRnc

IRATHOFailRelocPrepOutCSNeighbRncFailTarSys

Failed relocation preparations for UMTS to GSM handover with reference cell on DRNC from network point of view per failure cause (FailTarSys)

Data Source

RNC C-Node

Source Field

IRATHO.FailRelocPrepOutCS.NeighbRnc.FailTarSys

Source Section

NeighbouringRnc

IRATHOFailRelocPrepOutCSNeighbRncNoResAvr

Failed relocation preparations for UMTS to GSM handover with reference cell on DRNC from network point of view per failure cause (NoResAvr)

Data Source

RNC C-Node

Source Field

IRATHO.FailRelocPrepOutCS.NeighbRnc.NoResAvr

Source Section

NeighbouringRnc

IRATHOFailRelocPrepOutCSNeighbRncNoRRTarCell

Failed relocation preparations for UMTS to GSM handover with reference cell on DRNC from network point of view per failure cause (NoRRTarCell)

Data Source

RNC C-Node

Source Field

IRATHO.FailRelocPrepOutCS.NeighbRnc.NoRRTarCell

Source Section

NeighbouringRnc

IRATHOFailRelocPrepOutCSNeighbRncNotSupTarSys

Failed relocation preparations for UMTS to GSM handover with reference cell on DRNC from network point of view per failure cause (NotSupTarSys)

Data Source

RNC C-Node

Source Field

IRATHO.FailRelocPrepOutCS.NeighbRnc.NotSupTarSys

Source Section

NeighbouringRnc

IRATHOFailRelocPrepOutCSNeighbRncOmInt

Failed relocation preparations for UMTS to GSM handover with reference cell on DRNC from network point of view per failure cause (OmInt)

Data Source

RNC C-Node

Source Field

IRATHO.FailRelocPrepOutCS.NeighbRnc.OmInt

Source Section

NeighbouringRnc

IRATHOFailRelocPrepOutCSNeighbRncRelocCanc

Failed relocation preparations for UMTS to GSM handover with reference cell on DRNC from network point of view per failure cause (RelocCanc)

Data Source

RNC C-Node

Source Field

IRATHO.FailRelocPrepOutCS.NeighbRnc.RelocCanc

Source Section

NeighbouringRnc

IRATHOFailRelocPrepOutCSNeighbRncReqCiphNotSuppr

Failed relocation preparations for UMTS to GSM handover with reference cell on DRNC from network point of view per failure cause (ReqCiphNotSuppr)

Data Source

RNC C-Node

Source Field

IRATHO.FailRelocPrepOutCS.NeighbRnc.ReqCiphNotSuppr

Source Section

NeighbouringRnc

IRATHOFailRelocPrepOutCSNeighbRncTarNotAllowed

Failed relocation preparations for UMTS to GSM handover with reference cell on DRNC from network point of view per failure cause (TarNotAllowed)

Data Source

RNC C-Node

Source Field

IRATHO.FailRelocPrepOutCS.NeighbRnc.TarNotAllowed

Source Section

NeighbouringRnc

IRATHOFailRelocPrepOutCSNeighbRncTRELOCprep_exp

Failed relocation preparations for UMTS to GSM handover with reference cell on DRNC from network point of view per failure cause (TRELOCprep_exp)

Data Source

RNC C-Node

Source Field

IRATHO.FailRelocPrepOutCS.NeighbRnc.TRELOCprep_exp

Source Section

NeighbouringRnc

IRATHOFailRelocPrepOutCSNeighbRncTrLdHighTarCell

Failed relocation preparations for UMTS to GSM handover with reference cell on DRNC from network point of view per failure cause (TrLdHighTarCell)

Data Source

RNC C-Node

Source Field

IRATHO.FailRelocPrepOutCS.NeighbRnc.TrLdHighTarCell

Source Section

NeighbouringRnc

IRATHOFailRelocPrepOutCSNeighbRncUnspecFail

Failed relocation preparations for UMTS to GSM handover with reference cell on DRNC from network point of view per failure cause (UnspecFail)

Data Source

RNC C-Node

Source Field

IRATHO.FailRelocPrepOutCS.NeighbRnc.UnspecFail

Source Section

NeighbouringRnc

IRATHOFailRelocPrepOutCSSumNeighbRnc

Failed relocation preparations for UMTS to GSM handover on the reference cell from network point of view. (NeighbRnc)

Data Source

RNC C-Node

Source Field

IRATHO.FailRelocPrepOutCS.Sum.NeighbRnc

Source Section

NeighbouringRnc

IRATHOSuccOutCSNeighbRncNoRsrcCs

Successful outgoing CS UMTS to GSM handover (CS inter-RAT handover) with reference cell on DRNC. (NoRsrcCs)

Data Source

RNC C-Node

Source Field

IRATHO.SuccOutCS.NeighbRnc.NoRsrcCs

Source Section

NeighbouringRnc

IRATHOSuccOutCSNeighbRncRescueCs

Successful outgoing CS UMTS to GSM handover (CS inter-RAT handover) with reference cell on DRNC. (RescueCs)

Data Source

RNC C-Node

Source Field

IRATHO.SuccOutCS.NeighbRnc.RescueCs

Source Section

NeighbouringRnc

IRATHOSuccOutPSNeighbRncNoRsrcPs

Successful outgoing UTRAN controlled PS 3G to 2G handover (PS Inter-RAT handover). Packet Switched inter-RAT handover is implemented by the Cell Change Order from UTRAN procedure. (NoRsrcPs)

Data Source

RNC C-Node

Source Field

IRATHO.SuccOutPS.NeighbRnc.NoRsrcPs

Source Section

NeighbouringRnc

IRATHOSuccOutPSNeighbRncRescuePs

Successful outgoing UTRAN controlled PS 3G to 2G handover (PS Inter-RAT handover). Packet Switched inter-RAT handover is implemented by the Cell Change Order from UTRAN procedure. (RescuePs)

Data Source

RNC C-Node

Source Field

IRATHO.SuccOutPS.NeighbRnc.RescuePs

Source Section

NeighbouringRnc

IRATHOSuccRelocDirRetryNeighbRnc

Successful Inter-system UMTS to GSM Directed Retry. (NeighbRnc)

Data Source

RNC C-Node

Source Field

VS.IRATHO.SuccReloc.DirRetry.NeighbRnc

Source Section

NeighbouringRnc

IRATHOSuccRelocPrepDirRetryNeighbRnc

Successful relocation preparations for inter-system UMTS to GSM directed retry. (NeighbRnc)

Data Source

RNC C-Node

Source Field

VS.IRATHO.SuccRelocPrep.DirRetry.NeighbRnc

Source Section

NeighbouringRnc

IRATHOSuccRelocPrepOutCSNextBestCellNeighbRnc

Successful relocation preparations for CS UMTS to GSM handover to the next best GSM cell (CS inter-RAT Handover Attempt) from network point of view with reference cell on DRNC. (NeighbRnc)

Data Source

RNC C-Node

Source Field

IRATHO.SuccRelocPrepOutCS.NextBestCell.NeighbRnc

Source Section

NeighbouringRnc

IRATHOTimeoutOutPSUTRANNeighbRnc

Outgoing packet switched inter-RAT handovers UTRAN controlled timeouts with reference cell on DRNC. (NeighbRnc)

Data Source

RNC C-Node

Source Field

VS.IRATHO.TimeoutOutPSUTRAN.NeighbRnc

Source Section

NeighbouringRnc

IRATHOTrelocOverallNeighbRnc

UMTS to GSM handovers TRelocOverall Expiry (NeighbRnc)

Data Source

RNC C-Node

Source Field

IRATHO.TrelocOverall.NeighbRnc

Source Section

NeighbouringRnc

IRATHOWPSAttDirectedRetryNeighbRnc

Attempted CAC failure initiated Directed Retries of Wireless Priority Service (WPS) calls. Only applicable in the context of Directed Retry for WPS calls. (NeighbRnc)

Data Source

RNC C-Node

Source Field

VS.IRATHO.WPS.AttDirectedRetry.NeighbRnc

Source Section

NeighbouringRnc

IRATHOWPSAttHONeighbRnc

Attempted CS IRAT handovers of CAC failure initiated Directed Retries of Wireless Priority Service (WPS) calls. Only applicable in the context of Directed Retry for WPS calls. (NeighbRnc)

Data Source

RNC C-Node

Source Field

VS.IRATHO.WPS.AttHO.NeighbRnc

Source Section

NeighbouringRnc

IRATHOWPSCancelHONeighbRnc

Cancelled WPS CS IRAT Directed Retry attempts. The number of WPS calls for that the Directed Retry is cancelled by normal call release after the RAB Assignment was received and before the Directed Retry is initiated by a relocation preparation procedure. Only applicable for the context of WPS call Directed Retry. (NeighbRnc)

Data Source

RNC C-Node

Source Field

VS.IRATHO.WPS.CancelHO.NeighbRnc

Source Section

NeighbouringRnc

IRATHOWPSCancelRelocPrepNeighbRnc

Cancelled WPS CS IRAT Directed Retry Relocation. The number of WPS calls for that the Directed Retry is cancelled by normal call release during ongoing relocation preparation procedure. Only applicable for the context of WPS call Directed Retry. (NeighbRnc)

Data Source

RNC C-Node

Source Field

VS.IRATHO.WPS.CancelRelocPrep.NeighbRnc

Source Section

NeighbouringRnc

IRATHOWPSSuccDirectedRetryNeighbRnc

Successful CAC failure initiated CS IRAT Directed Retries of Wireless Priority Service (WPS) calls. Only applicable in the context of Directed Retry for WPS calls. (NeighbRnc)

Data Source

RNC C-Node

Source Field

VS.IRATHO.WPS.SuccDirectedRetry.NeighbRnc

Source Section

NeighbouringRnc

IRMSchedulingDowngradedFailureNeighbRncDchPsIb128

Number of times a reconfiguration failure occurs after activation of feature called IRM scheduling downgrading based on TxCP. For a primary cell on DRNC and a radio quality degradation (detected by Transmitted Code Power) on a PS I/B or PS S call, this counter counts the number of reconfiguration failure (downgrading). (DchPsIb128)

Data Source

RNC C-Node

Source Field

VS.IRMSchedulingDowngradedFailureNeighbRnc.DchPsIb128

Source Section

NeighbouringRnc

IRMSchedulingDowngradedFailureNeighbRncDchPsIb16

Number of times a reconfiguration failure occurs after activation of feature called IRM scheduling downgrading based on TxCP. For a primary cell on DRNC and a radio quality degradation (detected by Transmitted Code Power) on a PS I/B or PS S call, this counter counts the number of reconfiguration failure (downgrading). (DchPsIb16)

Data Source

RNC C-Node

Source Field

VS.IRMSchedulingDowngradedFailureNeighbRnc.DchPsIb16

Source Section

NeighbouringRnc

IRMSchedulingDowngradedFailureNeighbRncDchPsIb256

Number of times a reconfiguration failure occurs after activation of feature called IRM scheduling downgrading based on TxCP. For a primary cell on DRNC and a radio quality degradation (detected by Transmitted Code Power) on a PS I/B or PS S call, this counter counts the number of reconfiguration failure (downgrading). (DchPsIb256)

Data Source

RNC C-Node

Source Field

VS.IRMSchedulingDowngradedFailureNeighbRnc.DchPsIb256

Source Section

NeighbouringRnc

IRMSchedulingDowngradedFailureNeighbRncDchPsIb32

Number of times a reconfiguration failure occurs after activation of feature called IRM scheduling downgrading based on TxCP. For a primary cell on DRNC and a radio quality degradation (detected by Transmitted Code Power) on a PS I/B or PS S call, this counter counts the number of reconfiguration failure (downgrading). (DchPsIb32)

Data Source

RNC C-Node

Source Field

VS.IRMSchedulingDowngradedFailureNeighbRnc.DchPsIb32

Source Section

NeighbouringRnc

IRMSchedulingDowngradedFailureNeighbRncDchPsIb384

Number of times a reconfiguration failure occurs after activation of feature called IRM scheduling downgrading based on TxCP. For a primary cell on DRNC and a radio quality degradation (detected by Transmitted Code Power) on a PS I/B or PS S call, this counter counts the number of reconfiguration failure (downgrading). (DchPsIb384)

Data Source

RNC C-Node

Source Field

VS.IRMSchedulingDowngradedFailureNeighbRnc.DchPsIb384

Source Section

NeighbouringRnc

IRMSchedulingDowngradedFailureNeighbRncDchPsIb64

Number of times a reconfiguration failure occurs after activation of feature called IRM scheduling downgrading based on TxCP. For a primary cell on DRNC and a radio quality degradation (detected by Transmitted Code Power) on a PS I/B or PS S call, this counter counts the number of reconfiguration failure (downgrading). (DchPsIb64)

Data Source

RNC C-Node

Source Field

VS.IRMSchedulingDowngradedFailureNeighbRnc.DchPsIb64

Source Section

NeighbouringRnc

IRMSchedulingDowngradedFailureNeighbRncDchPsStr128

Number of times a reconfiguration failure occurs after activation of feature called IRM scheduling downgrading based on TxCP. For a primary cell on DRNC and a radio quality degradation (detected by Transmitted Code Power) on a PS I/B or PS S call, this counter counts the number of reconfiguration failure (downgrading). (DchPsStr128)

Data Source

RNC C-Node

Source Field

VS.IRMSchedulingDowngradedFailureNeighbRnc.DchPsStr128

Source Section

NeighbouringRnc

IRMSchedulingDowngradedFailureNeighbRncDchPsStr16

Number of times a reconfiguration failure occurs after activation of feature called IRM scheduling downgrading based on TxCP. For a primary cell on DRNC and a radio quality

degradation (detected by Transmitted Code Power) on a PS I/B or PS S call, this counter counts the number of reconfiguration failure (downgrading). (DchPsStr16)

Data Source

RNC C-Node

Source Field

VS.IRMSchedulingDowngradedFailureNeighbRnc.DchPsStr16

Source Section

NeighbouringRnc

IRMSchedulingDowngradedFailureNeighbRncDchPsStr256

Number of times a reconfiguration failure occurs after activation of feature called IRM scheduling downgrading based on TxCP. For a primary cell on DRNC and a radio quality degradation (detected by Transmitted Code Power) on a PS I/B or PS S call, this counter counts the number of reconfiguration failure (downgrading). (DchPsStr256)

Data Source

RNC C-Node

Source Field

VS.IRMSchedulingDowngradedFailureNeighbRnc.DchPsStr256

Source Section

NeighbouringRnc

IRMSchedulingDowngradedFailureNeighbRncDchPsStr384

Number of times a reconfiguration failure occurs after activation of feature called IRM scheduling downgrading based on TxCP. For a primary cell on DRNC and a radio quality degradation (detected by Transmitted Code Power) on a PS I/B or PS S call, this counter counts the number of reconfiguration failure (downgrading). (DchPsStr384)

Data Source

RNC C-Node

Source Field

VS.IRMSchedulingDowngradedFailureNeighbRnc.DchPsStr384

Source Section

NeighbouringRnc

IRMSchedulingDowngradedFailureNeighbRncDchPsStr64

Number of times a reconfiguration failure occurs after activation of feature called IRM scheduling downgrading based on TxCP. For a primary cell on DRNC and a radio quality degradation (detected by Transmitted Code Power) on a PS I/B or PS S call, this counter counts the number of reconfiguration failure (downgrading). (DchPsStr64)

Data Source

RNC C-Node

Source Field

VS.IRMSchedulingDowngradedFailureNeighbRnc.DchPsStr64

Source Section

NeighbouringRnc

IRMSchedulingDowngradedFailureNeighbRncOther

Number of times a reconfiguration failure occurs after activation of feature called IRM scheduling downgrading based on TxCP. For a primary cell on DRNC and a radio quality degradation (detected by Transmitted Code Power) on a PS I/B or PS S call, this counter counts the number of reconfiguration failure (downgrading). (Other)

Data Source

RNC C-Node

Source Field

VS.IRMSchedulingDowngradedFailureNeighbRnc.Other

Source Section

NeighbouringRnc

IRMSchedulingDowngradedSuccessNeighbRncDchPsIb128

Number of times the RB is downgraded after activation of feature called IRM scheduling downgrading based on TxCP. For a primary cell on DRNC and a radio quality degradation (detected by Transmitted Code Power) on a PS I/B or PS S call, this counter counts the number of throughput downgradings (DchPsIb128)

Data Source

RNC C-Node

Source Field

VS.IRMSchedulingDowngradedSuccessNeighbRnc.DchPsIb128

Source Section

NeighbouringRnc

IRMSchedulingDowngradedSuccessNeighbRncDchPsIb16

Number of times the RB is downgraded after activation of feature called IRM scheduling downgrading based on TxCP. For a primary cell on DRNC and a radio quality degradation (detected by Transmitted Code Power) on a PS I/B or PS S call, this counter counts the number of throughput downgradings (DchPsIb16)

Data Source

RNC C-Node

Source Field

VS.IRMSchedulingDowngradedSuccessNeighbRnc.DchPsIb16

Source Section

NeighbouringRnc

IRMSchedulingDowngradedSuccessNeighbRncDchPsIb256

Number of times the RB is downgraded after activation of feature called IRM scheduling downgrading based on TxCP. For a primary cell on DRNC and a radio quality degradation (detected by Transmitted Code Power) on a PS I/B or PS S call, this counter counts the number of throughput downgradings (DchPsIb256)

Data Source

RNC C-Node

Source Field

VS.IRMSchedulingDowngradedSuccessNeighbRnc.DchPsIb256

Source Section

NeighbouringRnc

IRMSchedulingDowngradedSuccessNeighbRncDchPsIb32

Number of times the RB is downgraded after activation of feature called IRM scheduling downgrading based on TxCP. For a primary cell on DRNC and a radio quality degradation (detected by Transmitted Code Power) on a PS I/B or PS S call, this counter counts the number of throughput downgradings (DchPsIb32)

Data Source

RNC C-Node

Source Field

VS.IRMSchedulingDowngradedSuccessNeighbRnc.DchPsIb32

Source Section

NeighbouringRnc

IRMSchedulingDowngradedSuccessNeighbRncDchPsIb384

Number of times the RB is downgraded after activation of feature called IRM scheduling downgrading based on TxCP. For a primary cell on DRNC and a radio quality degradation (detected by Transmitted Code Power) on a PS I/B or PS S call, this counter counts the number of throughput downgradings (DchPsIb384)

Data Source

RNC C-Node

Source Field

VS.IRMSchedulingDowngradedSuccessNeighbRnc.DchPsIb384

Source Section

NeighbouringRnc

IRMSchedulingDowngradedSuccessNeighbRncDchPsIb64

Number of times the RB is downgraded after activation of feature called IRM scheduling downgrading based on TxCP. For a primary cell on DRNC and a radio quality degradation (detected by Transmitted Code Power) on a PS I/B or PS S call, this counter counts the number of throughput downgradings (DchPsIb64)

Data Source

RNC C-Node

Source Field

VS.IRMSchedulingDowngradedSuccessNeighbRnc.DchPsIb64

Source Section

NeighbouringRnc

IRMSchedulingDowngradedSuccessNeighbRncDchPsStr128

Number of times the RB is downgraded after activation of feature called IRM scheduling downgrading based on TxCP. For a primary cell on DRNC and a radio quality degradation (detected by Transmitted Code Power) on a PS I/B or PS S call, this counter counts the number of throughput downgradings (DchPsStr128)

Data Source

RNC C-Node

Source Field

VS.IRMSchedulingDowngradedSuccessNeighbRnc.DchPsStr128

Source Section

NeighbouringRnc

IRMSchedulingDowngradedSuccessNeighbRncDchPsStr16

Number of times the RB is downgraded after activation of feature called IRM scheduling downgrading based on TxCP. For a primary cell on DRNC and a radio quality degradation (detected by Transmitted Code Power) on a PS I/B or PS S call, this counter counts the number of throughput downgradings (DchPsStr16)

Data Source

RNC C-Node

Source Field

VS.IRMSchedulingDowngradedSuccessNeighbRnc.DchPsStr16

Source Section

NeighbouringRnc

IRMSchedulingDowngradedSuccessNeighbRncDchPsStr256

Number of times the RB is downgraded after activation of feature called IRM scheduling downgrading based on TxCP. For a primary cell on DRNC and a radio quality degradation

(detected by Transmitted Code Power) on a PS I/B or PS S call, this counter counts the number of throughput downgradings (DchPsStr256)

Data Source

RNC C-Node

Source Field

VS.IRMSchedulingDowngradedSuccessNeighbRnc.DchPsStr256

Source Section

NeighbouringRnc

IRMSchedulingDowngradedSuccessNeighbRncDchPsStr384

Number of times the RB is downgraded after activation of feature called IRM scheduling downgrading based on TxCP. For a primary cell on DRNC and a radio quality degradation (detected by Transmitted Code Power) on a PS I/B or PS S call, this counter counts the number of throughput downgradings (DchPsStr384)

Data Source

RNC C-Node

Source Field

VS.IRMSchedulingDowngradedSuccessNeighbRnc.DchPsStr384

Source Section

NeighbouringRnc

IRMSchedulingDowngradedSuccessNeighbRncDchPsStr64

Number of times the RB is downgraded after activation of feature called IRM scheduling downgrading based on TxCP. For a primary cell on DRNC and a radio quality degradation (detected by Transmitted Code Power) on a PS I/B or PS S call, this counter counts the number of throughput downgradings (DchPsStr64)

Data Source

RNC C-Node

Source Field

VS.IRMSchedulingDowngradedSuccessNeighbRnc.DchPsStr64

Source Section

NeighbouringRnc

IRMSchedulingDowngradedSuccessNeighbRncOther

Number of times the RB is downgraded after activation of feature called IRM scheduling downgrading based on TxCP. For a primary cell on DRNC and a radio quality degradation (detected by Transmitted Code Power) on a PS I/B or PS S call, this counter counts the number of throughput downgradings (Other)

Data Source

RNC C-Node

Source Field

VS.IRMSchedulingDowngradedSuccessNeighbRnc.Other

Source Section

NeighbouringRnc

IrmUpgradingCommandNrncHighBitRate

Number of upgrading commands for the primary cells on DRNC (HighBitRate)

Data Source

RNC C-Node

Source Field

VS.IrmUpgradingCommandNrnc.HighBitRate

Source Section

NeighbouringRnc

IrmUpgradingCommandNrncLowBitRate

Number of upgrading commands for the primary cells on DRNC (LowBitRate)

Data Source

RNC C-Node

Source Field

VS.IrmUpgradingCommandNrnc.LowBitRate

Source Section

NeighbouringRnc

IrmUpgradingSuccessfulNrncHighBitRate

Number of successful upgradings for the primary cells on DRNC (HighBitRate)

Data Source

RNC C-Node

Source Field

VS.IrmUpgradingSuccessfulNrnc.HighBitRate

Source Section

NeighbouringRnc

IrmUpgradingSuccessfulNrncLowBitRate

Number of successful upgradings for the primary cells on DRNC (LowBitRate)

Data Source

RNC C-Node

Source Field

VS.IrmUpgradingSuccessfulNrnc.LowBitRate

Source Section

NeighbouringRnc

IuAbnormRelReqCsNrncDlAsCnfCsData

Number of Iu CS release requests due to abnormal conditions, when the reference FddCell of these calls is located on the drift RNC. (DlAsCnfCsData)

Data Source

RNC C-Node

Source Field

VS.IuAbnormRelReqCsNrnc.DlAsCnfCsData

Source Section

NeighbouringRnc

IuAbnormRelReqCsNrncDlAsCnfCsSigPs

Number of Iu CS release requests due to abnormal conditions, when the reference FddCell of these calls is located on the drift RNC. (DlAsCnfCsSigPs)

Data Source

RNC C-Node

Source Field

VS.IuAbnormRelReqCsNrnc.DlAsCnfCsSigPs

Source Section

NeighbouringRnc

IuAbnormRelReqCsNrncDlAsCnfCsSpeechNbLrAmr

Number of Iu CS release requests due to abnormal conditions, when the reference FddCell of these calls is located on the drift RNC. (DlAsCnfCsSpeechNbLrAmr)

Data Source

RNC C-Node

Source Field

VS.IuAbnormRelReqCsNrnc.DlAsCnfCsSpeechNbLrAmr

Source Section

NeighbouringRnc

IuAbnormRelReqCsNrncDlAsCnfCsSpeechWbAmr

Number of Iu CS release requests due to abnormal conditions, when the reference FddCell of these calls is located on the drift RNC. (DlAsCnfCsSpeechWbAmr)

Data Source

RNC C-Node

Source Field

VS.IuAbnormRelReqCsNrnc.DlAsCnfCsSpeechWbAmr

Source Section

NeighbouringRnc

IuAbnormRelReqCsNrncDlAsCnfCsStr14_4

Number of Iu CS release requests due to abnormal conditions, when the reference FddCell of these calls is located on the drift RNC. (DlAsCnfCsStr14_4)

Data Source

RNC C-Node

Source Field

VS.IuAbnormRelReqCsNrnc.DlAsCnfCsStr14_4

Source Section

NeighbouringRnc

IuAbnormRelReqCsNrncDlAsCnfCsStr57_6

Number of Iu CS release requests due to abnormal conditions, when the reference FddCell of these calls is located on the drift RNC. (DlAsCnfCsStr57_6)

Data Source

RNC C-Node

Source Field

VS.IuAbnormRelReqCsNrnc.DlAsCnfCsStr57_6

Source Section

NeighbouringRnc

IuAbnormRelReqCsNrncDlAsCnfOther

Number of Iu CS release requests due to abnormal conditions, when the reference FddCell of these calls is located on the drift RNC. (DlAsCnfOther)

Data Source

RNC C-Node

Source Field

VS.IuAbnormRelReqCsNrnc.DlAsCnfOther

Source Section

NeighbouringRnc

IuAbnormRelReqCsNrncDlAsCnfSig

Number of Iu CS release requests due to abnormal conditions, when the reference FddCell of these calls is located on the drift RNC. (DlAsCnfSig)

Data Source

RNC C-Node

Source Field

VS.IuAbnormRelReqCsNrnc.DlAsCnfSig

Source Section

NeighbouringRnc

IuAbnormRelReqPsNrncDlAsCnfHsdpa

Number of DlAsConfIds that increments for multi-service due to abnormal conditions, when the reference FddCell of these calls is located on the drift RNC. (DlAsCnfHsdpa)

Data Source

RNC C-Node

Source Field

VS.IuAbnormRelReqPsNrnc.DlAsCnfHsdpa

Source Section

NeighbouringRnc

IuAbnormRelReqPsNrncDlAsCnfOther

Number of DlAsConfIds that increments for multi-service due to abnormal conditions, when the reference FddCell of these calls is located on the drift RNC. (DlAsCnfOther)

Data Source

RNC C-Node

Source Field

VS.IuAbnormRelReqPsNrnc.DlAsCnfOther

Source Section

NeighbouringRnc

IuAbnormRelReqPsNrncDlAsCnfPsIB128

Number of DlAsConfIds that increments for multi-service due to abnormal conditions, when the reference FddCell of these calls is located on the drift RNC. (DlAsCnfPsIB128)

Data Source

RNC C-Node

Source Field

VS.IuAbnormRelReqPsNrnc.DlAsCnfPsIB128

Source Section

NeighbouringRnc

IuAbnormRelReqPsNrncDlAsCnfPsIB256

Number of DlAsConfIds that increments for multi-service due to abnormal conditions, when the reference FddCell of these calls is located on the drift RNC. (DlAsCnfPsIB256)

Data Source

RNC C-Node

Source Field

VS.IuAbnormRelReqPsNrnc.DlAsCnfPsIB256

Source Section

NeighbouringRnc

IuAbnormRelReqPsNrncDlAsCnfPsIB384

Number of DlAsConfIds that increments for multi-service due to abnormal conditions, when the reference FddCell of these calls is located on the drift RNC. (DlAsCnfPsIB384)

Data Source

RNC C-Node

Source Field

VS.IuAbnormRelReqPsNrnc.DlAsCnfPsIB384

Source Section

NeighbouringRnc

IuAbnormRelReqPsNrncDlAsCnfPsIB64

Number of DlAsConfIds that increments for multi-service due to abnormal conditions, when the reference FddCell of these calls is located on the drift RNC. (DlAsCnfPsIB64)

Data Source

RNC C-Node

Source Field

VS.IuAbnormRelReqPsNrnc.DlAsCnfPsIB64

Source Section

NeighbouringRnc

IuAbnormRelReqPsNrncDlAsCnfPsIBLt64

Number of DlAsConfIds that increments for multi-service due to abnormal conditions, when the reference FddCell of these calls is located on the drift RNC. (DlAsCnfPsIBLt64)

Data Source

RNC C-Node

Source Field

VS.IuAbnormRelReqPsNrnc.DlAsCnfPsIBLt64

Source Section

NeighbouringRnc

IuAbnormRelReqPsNrncDlAsCnfPsSigCs

Number of DlAsConfIds that increments for multi-service due to abnormal conditions, when the reference FddCell of these calls is located on the drift RNC. (DlAsCnfPsSigCs)

Data Source

RNC C-Node

Source Field

VS.IuAbnormRelReqPsNrnc.DlAsCnfPsSigCs

Source Section

NeighbouringRnc

IuAbnormRelReqPsNrncDlAsCnfPsStr128

Number of DlAsConfIds that increments for multi-service due to abnormal conditions, when the reference FddCell of these calls is located on the drift RNC. (DlAsCnfPsStr128)

Data Source

RNC C-Node

Source Field

VS.IuAbnormRelReqPsNrnc.DlAsCnfPsStr128

Source Section

NeighbouringRnc

IuAbnormRelReqPsNrncDlAsCnfPsStr256

Number of DlAsConfIds that increments for multi-service due to abnormal conditions, when the reference FddCell of these calls is located on the drift RNC. (DlAsCnfPsStr256)

Data Source

RNC C-Node

Source Field

VS.IuAbnormRelReqPsNrnc.DlAsCnfPsStr256

Source Section

NeighbouringRnc

IuAbnormRelReqPsNrncDlAsCnfPsStr384

Number of DlAsConfIds that increments for multi-service due to abnormal conditions, when the reference FddCell of these calls is located on the drift RNC. (DlAsCnfPsStr384)

Data Source

RNC C-Node

Source Field

VS.IuAbnormRelReqPsNrnc.DlAsCnfPsStr384

Source Section

NeighbouringRnc

IuAbnormRelReqPsNrncDlAsCnfPsStr64

Number of DlAsConfIds that increments for multi-service due to abnormal conditions, when the reference FddCell of these calls is located on the drift RNC. (DlAsCnfPsStr64)

Data Source

RNC C-Node

Source Field

VS.IuAbnormRelReqPsNrnc.DlAsCnfPsStr64

Source Section

NeighbouringRnc

IuAbnormRelReqPsNrncDlAsCnfPsStrLt64

Number of DlAsConfIds that increments for multi-service due to abnormal conditions, when the reference FddCell of these calls is located on the drift RNC. (DlAsCnfPsStrLt64)

Data Source

RNC C-Node

Source Field

VS.IuAbnormRelReqPsNrnc.DlAsCnfPsStrLt64

Source Section

NeighbouringRnc

IuAbnormRelReqPsNrncDlAsCnfSig

Number of DlAsConfIds that increments for multi-service due to abnormal conditions, when the reference FddCell of these calls is located on the drift RNC. (DlAsCnfSig)

Data Source

RNC C-Node

Source Field

VS.IuAbnormRelReqPsNrnc.DlAsCnfSig

Source Section

NeighbouringRnc

IuAbnormRelReqPsNrncDlAsCnfTrbCellFach

Number of DlAsConfIds that increments for multi-service due to abnormal conditions, when the reference FddCell of these calls is located on the drift RNC. (DlAsCnfTrbCellFach)

Data Source

RNC C-Node

Source Field

VS.IuAbnormRelReqPsNrnc.DlAsCnfTrbCellFach

Source Section

NeighbouringRnc

IuAbnormRelReqPsNrncDlAsCnfxPch

Number of DlAsConfIds that increments for multi-service due to abnormal conditions, when the reference FddCell of these calls is located on the drift RNC. (DlAsCnfxPch)

Data Source

RNC C-Node

Source Field

VS.IuAbnormRelReqPsNrnc.DlAsCnfxPch

Source Section

NeighbouringRnc

IuAbnRelReqPsNRncPerULRbEDCH

Number of Iu abnormal release request that increments whenever RNC requests Iu release due to abnormal conditions. Reference cell on a drift RNC (EDCH)

Data Source

RNC C-Node

Source Field

VS.IuAbnRelReqPsNRncPerULRb.EDCH

Source Section

NeighbouringRnc

IuAbnRelReqPsNRncPerULRbOther

Number of Iu abnormal release request that increments whenever RNC requests Iu release due to abnormal conditions. Reference cell on a drift RNC (Other)

Data Source

RNC C-Node

Source Field

VS.IuAbnRelReqPsNRncPerULRb.Other

Source Section

NeighbouringRnc

IuAbnRelReqPsNRncPerULRbR99

Number of Iu abnormal release request that increments whenever RNC requests Iu release due to abnormal conditions. Reference cell on a drift RNC (R99)

Data Source

RNC C-Node

Source Field

VS.IuAbnRelReqPsNRncPerULRb.R99

Source Section

NeighbouringRnc

IurAvgNbrInitSccpCnxAvg

Average number of initiated sccp connections on a Iur interface (Avg)

Data Source

RNC C-Node

Source Field

VS.IurAvgNbrInitSccpCnx.Avg

Source Section

NeighbouringRnc

IurAvgNbrInitSccpCnxCum

Average number of initiated sccp connections on a Iur interface (Cum)

Data Source

RNC C-Node

Source Field

VS.IurAvgNbrInitSccpCnx.Cum

Source Section

NeighbouringRnc

IurAvgNbrInitSccpCnxMax

Average number of initiated sccp connections on a Iur interface (Max)

Data Source

RNC C-Node

Source Field

VS.IurAvgNbrInitSccpCnx.Max

Source Section

NeighbouringRnc

IurAvgNbrInitSccpCnxMin

Average number of initiated sccp connections on a Iur interface (Min)

Data Source

RNC C-Node

Source Field

VS.IurAvgNbrInitSccpCnx.Min

Source Section

NeighbouringRnc

IurAvgNbrInitSccpCnxNbEvt

Average number of initiated sccp connections on a Iur interface (NbEvt)

Data Source

RNC C-Node

Source Field

VS.IurAvgNbrInitSccpCnx.NbEvt

Source Section

NeighbouringRnc

IurAvgNbrTermSccpCnxAvg

Average number of terminating sccp connections on a Iur interface (Avg)

Data Source

RNC C-Node

Source Field

VS.IurAvgNbrTermSccpCnx.Avg

Source Section

NeighbouringRnc

IurAvgNbrTermSccpCnxCum

Average number of terminating sccp connections on a Iur interface (Cum)

Data Source

RNC C-Node

Source Field

VS.IurAvgNbrTermSccpCnx.Cum

Source Section

NeighbouringRnc

IurAvgNbrTermSccpCnxMax

Average number of terminating sccp connections on a Iur interface (Max)

Data Source

RNC C-Node

Source Field

VS.IurAvgNbrTermSccpCnx.Max

Source Section

NeighbouringRnc

IurAvgNbrTermSccpCnxMin

Average number of terminating sccp connections on a Iur interface (Min)

Data Source

RNC C-Node

Source Field

VS.IurAvgNbrTermSccpCnx.Min

Source Section

NeighbouringRnc

IurAvgNbrTermSccpCnxNbEvt

Average number of terminating sccp connections on a Iur interface (NbEvt)

Data Source

RNC C-Node

Source Field

VS.IurAvgNbrTermSccpCnx.NbEvt

Source Section

NeighbouringRnc

IurDrncRelocCommit

Number of Relocation Commit messages received over IuR. (IurDrncRelocCommit)

Data Source

RNC C-Node

Source Field

VS.IurDrncRelocCommit

Source Section

NeighbouringRnc

IuReleaseCommandCsNRncNoRemainingRab

Number of RANAP/IU_RELEASE_COMMAND messages received by RNC on the IU-CS interface when the reference cell is located on a Drift RNC. (NoRemainingRab)

Data Source

RNC C-Node

Source Field

VS.IuReleaseCommandCsNRnc.NoRemainingRab

Source Section

NeighbouringRnc

IuReleaseCommandCsNRncNormalRelease

Number of RANAP/IU_RELEASE_COMMAND messages received by RNC on the IU-CS interface when the reference cell is located on a Drift RNC. (NormalRelease)

Data Source

RNC C-Node

Source Field

VS.IuReleaseCommandCsNRnc.NormalRelease

Source Section

NeighbouringRnc

IuReleaseCommandCsNRncOamIntervention

Number of RANAP/IU_RELEASE_COMMAND messages received by RNC on the IU-CS interface when the reference cell is located on a Drift RNC. (OamIntervention)

Data Source

RNC C-Node

Source Field

VS.IuReleaseCommandCsNRnc.OamIntervention

Source Section

NeighbouringRnc

IuReleaseCommandCsNRncOther

Number of RANAP/IU_RELEASE_COMMAND messages received by RNC on the IU-CS interface when the reference cell is located on a Drift RNC. (Other)

Data Source

RNC C-Node

Source Field

VS.IuReleaseCommandCsNRnc.Other

Source Section

NeighbouringRnc

IuReleaseCommandCsNRncReleaseDueToUtranGeneratedReason

Number of RANAP/IU_RELEASE_COMMAND messages received by RNC on the IU-CS interface when the reference cell is located on a Drift RNC. (ReleaseDueToUtranGeneratedReason)

Data Source

RNC C-Node

Source Field

VS.IuReleaseCommandCsNRnc.ReleaseDueToUtranGeneratedReason

Source Section

NeighbouringRnc

IuReleaseCommandCsNRncRelocationCancelled

Number of RANAP/IU_RELEASE_COMMAND messages received by RNC on the IU-CS interface when the reference cell is located on a Drift RNC. (RelocationCancelled)

Data Source

RNC C-Node

Source Field

VS.IuReleaseCommandCsNRnc.RelocationCancelled

Source Section

NeighbouringRnc

IuReleaseCommandCsNRncSucc3G2GReloc

Number of RANAP/IU_RELEASE_COMMAND messages received by RNC on the IU-CS interface when the reference cell is located on a Drift RNC. (Succ3G2GReloc)

Data Source

RNC C-Node

Source Field

VS.IuReleaseCommandCsNRnc.Succ3G2GReloc

Source Section

NeighbouringRnc

IuReleaseCommandCsNRncSucc3G3GReloc

Number of RANAP/IU_RELEASE_COMMAND messages received by RNC on the IU-CS interface when the reference cell is located on a Drift RNC. (Succ3G3GReloc)

Data Source

RNC C-Node

Source Field

VS.IuReleaseCommandCsNRnc.Succ3G3GReloc

Source Section

NeighbouringRnc

IuReleaseCommandCsNRncUnspecifiedFailure

Number of RANAP/IU_RELEASE_COMMAND messages received by RNC on the IU-CS interface when the reference cell is located on a Drift RNC. (UnspecifiedFailure)

Data Source

RNC C-Node

Source Field

VS.IuReleaseCommandCsNRnc.UnspecifiedFailure

Source Section

NeighbouringRnc

IuReleaseCommandCsNRncUserInactivity

Number of RANAP/IU_RELEASE_COMMAND messages received by RNC on the IU-CS interface when the reference cell is located on a Drift RNC. (UserInactivity)

Data Source

RNC C-Node

Source Field

VS.IuReleaseCommandCsNRnc.UserInactivity

Source Section

NeighbouringRnc

IuReleaseCommandPsNRncNoRemainingRab

Number of RANAP/IU_RELEASE_COMMAND messages received by RNC on the IU-PS interface when the reference cell is located on a Drift RNC. (NoRemainingRab)

Data Source

RNC C-Node

Source Field

VS.IuReleaseCommandPsNRnc.NoRemainingRab

Source Section

NeighbouringRnc

IuReleaseCommandPsNRncNormalRelease

Number of RANAP/IU_RELEASE_COMMAND messages received by RNC on the IU-PS interface when the reference cell is located on a Drift RNC. (NormalRelease)

Data Source

RNC C-Node

Source Field

VS.IuReleaseCommandPsNRnc.NormalRelease

Source Section

NeighbouringRnc

IuReleaseCommandPsNRncOamIntervention

Number of RANAP/IU_RELEASE_COMMAND messages received by RNC on the IU-PS interface when the reference cell is located on a Drift RNC. (OamIntervention)

Data Source

RNC C-Node

Source Field

VS.IuReleaseCommandPsNRnc.OamIntervention

Source Section

NeighbouringRnc

IuReleaseCommandPsNRncOther

Number of RANAP/IU_RELEASE_COMMAND messages received by RNC on the IU-PS interface when the reference cell is located on a Drift RNC. (Other)

Data Source

RNC C-Node

Source Field

VS.IuReleaseCommandPsNRnc.Other

Source Section

NeighbouringRnc

IuReleaseCommandPsNRncReleaseDueToUtranGeneratedReason

Number of RANAP/IU_RELEASE_COMMAND messages received by RNC on the IU-PS interface when the reference cell is located on a Drift RNC. (ReleaseDueToUtranGeneratedReason)

Data Source

RNC C-Node

Source Field

VS.IuReleaseCommandPsNRnc.ReleaseDueToUtranGeneratedReason

Source Section

NeighbouringRnc

IuReleaseCommandPsNRncRelocationCancelled

Number of RANAP/IU_RELEASE_COMMAND messages received by RNC on the IU-PS interface when the reference cell is located on a Drift RNC. (RelocationCancelled)

Data Source

RNC C-Node

Source Field

VS.IuReleaseCommandPsNRnc.RelocationCancelled

Source Section

NeighbouringRnc

IuReleaseCommandPsNRncSucc3G2GReloc

Number of RANAP/IU_RELEASE_COMMAND messages received by RNC on the IU-PS interface when the reference cell is located on a Drift RNC. (Succ3G2GReloc)

Data Source

RNC C-Node

Source Field

VS.IuReleaseCommandPsNRnc.Succ3G2GReloc

Source Section

NeighbouringRnc

IuReleaseCommandPsNRncSucc3G3GReloc

Number of RANAP/IU_RELEASE_COMMAND messages received by RNC on the IU-PS interface when the reference cell is located on a Drift RNC. (Succ3G3GReloc)

Data Source

RNC C-Node

Source Field

VS.IuReleaseCommandPsNRnc.Succ3G3GReloc

Source Section

NeighbouringRnc

IuReleaseCommandPsNRncUnspecifiedFailure

Number of RANAP/IU_RELEASE_COMMAND messages received by RNC on the IU-PS interface when the reference cell is located on a Drift RNC. (UnspecifiedFailure)

Data Source

RNC C-Node

Source Field

VS.IuReleaseCommandPsNRnc.UnspecifiedFailure

Source Section

NeighbouringRnc

IuReleaseCommandPsNRncUserInactivity

Number of RANAP/IU_RELEASE_COMMAND messages received by RNC on the IU-PS interface when the reference cell is located on a Drift RNC. (UserInactivity)

Data Source

RNC C-Node

Source Field

VS.IuReleaseCommandPsNRnc.UserInactivity

Source Section

NeighbouringRnc

IuReleaseCompleteCsNrncDlAsCnfCsData

Number of RANAP Iu Release Complete sent by RNC to CN on the Iu interface on CS domain, when the reference FDDCELL of these calls is located on the drift RNC. (DlAsCnfCsData)

Data Source

RNC C-Node

Source Field

VS.IuReleaseCompleteCsNrnc.DlAsCnfCsData

Source Section

NeighbouringRnc

IuReleaseCompleteCsNrncDlAsCnfCsSigPs

Number of RANAP Iu Release Complete sent by RNC to CN on the Iu interface on CS domain, when the reference FDDCELL of these calls is located on the drift RNC. (DlAsCnfCsSigPs)

Data Source

RNC C-Node

Source Field

VS.IuReleaseCompleteCsNrnc.DlAsCnfCsSigPs

Source Section

NeighbouringRnc

IuReleaseCompleteCsNrncDlAsCnfCsSpeechNbLrAmr

Number of RANAP Iu Release Complete sent by RNC to CN on the Iu interface on CS domain, when the reference FDDCELL of these calls is located on the drift RNC. (DlAsCnfCsSpeechNbLrAmr)

Data Source

RNC C-Node

Source Field

VS.IuReleaseCompleteCsNrnc.DlAsCnfCsSpeechNbLrAmr

Source Section

NeighbouringRnc

IuReleaseCompleteCsNrncDlAsCnfCsSpeechWbAmr

Number of RANAP Iu Release Complete sent by RNC to CN on the Iu interface on CS domain, when the reference FDDCELL of these calls is located on the drift RNC. (DlAsCnfCsSpeechWbAmr)

Data Source

RNC C-Node

Source Field

VS.IuReleaseCompleteCsNrnc.DlAsCnfCsSpeechWbAmr

Source Section

NeighbouringRnc

IuReleaseCompleteCsNrncDlAsCnfCsStr14_4

Number of RANAP Iu Release Complete sent by RNC to CN on the Iu interface on CS domain, when the reference FDDCELL of these calls is located on the drift RNC. (DlAsCnfCsStr14_4)

Data Source

RNC C-Node

Source Field

VS.IuReleaseCompleteCsNrnc.DlAsCnfCsStr14_4

Source Section

NeighbouringRnc

IuReleaseCompleteCsNrncDlAsCnfCsStr57_6

Number of RANAP Iu Release Complete sent by RNC to CN on the Iu interface on CS domain, when the reference FDDCELL of these calls is located on the drift RNC. (DlAsCnfCsStr57_6)

Data Source

RNC C-Node

Source Field

VS.IuReleaseCompleteCsNrnc.DlAsCnfCsStr57_6

Source Section

NeighbouringRnc

IuReleaseCompleteCsNrncDlAsCnfOther

Number of RANAP Iu Release Complete sent by RNC to CN on the Iu interface on CS domain, when the reference FDDCELL of these calls is located on the drift RNC. (DlAsCnfOther)

Data Source

RNC C-Node

Source Field

VS.IuReleaseCompleteCsNrnc.DlAsCnfOther

Source Section

NeighbouringRnc

IuReleaseCompleteCsNrncDlAsCnfSig

Number of RANAP Iu Release Complete sent by RNC to CN on the Iu interface on CS domain, when the reference FDDCELL of these calls is located on the drift RNC. (DlAsCnfSig)

Data Source

RNC C-Node

Source Field

VS.IuReleaseCompleteCsNrnc.DlAsCnfSig

Source Section

NeighbouringRnc

IuReleaseRequestCsNrncAbnormalConditionTimerRelocExpiry

Number of RANAP/IU_RELEASE_REQUEST messages sent by RNC to CS Core Network when the reference cell is located on a Drift RNC. (AbnormalConditionTimerRelocExpiry)

Data Source

RNC C-Node

Source Field

VS.IuReleaseRequestCsNrnc.AbnormalConditionTimerRelocExpiry

Source Section

NeighbouringRnc

IuReleaseRequestCsNrncConnectionWithNodeBLost

Number of RANAP/IU_RELEASE_REQUEST messages sent by RNC to CS Core Network when the reference cell is located on a Drift RNC. (ConnectionWithNodeBLost)

Data Source

RNC C-Node

Source Field

VS.IuReleaseRequestCsNrnc.ConnectionWithNodeBLost

Source Section

NeighbouringRnc

IuReleaseRequestCsNrncDlRLCErrSRB

Number of RANAP/IU_RELEASE_REQUEST messages sent by RNC to CS Core Network when the reference cell is located on a Drift RNC. (DlRLCErrSRB)

Data Source

RNC C-Node

Source Field

VS.IuReleaseRequestCsNrnc.DlRLCErrSRB

Source Section

NeighbouringRnc

IuReleaseRequestCsNrncFailureInTheRadioInterfaceProcedure

Number of RANAP/IU_RELEASE_REQUEST messages sent by RNC to CS Core Network when the reference cell is located on a Drift RNC. (FailureInTheRadioInterfaceProcedure)

Data Source

RNC C-Node

Source Field

VS.IuReleaseRequestCsNrnc.FailureInTheRadioInterfaceProcedure

Source Section

NeighbouringRnc

IuReleaseRequestCsNrncNoRemainingRAB

Number of RANAP/IU_RELEASE_REQUEST messages sent by RNC to CS Core Network when the reference cell is located on a Drift RNC. (NoRemainingRAB)

Data Source

RNC C-Node

Source Field

VS.IuReleaseRequestCsNrnc.NoRemainingRAB

Source Section

NeighbouringRnc

IuReleaseRequestCsNrncNoResourceAvailable

Number of RANAP/IU_RELEASE_REQUEST messages sent by RNC to CS Core Network when the reference cell is located on a Drift RNC. (NoResourceAvailable)

Data Source

RNC C-Node

Source Field

VS.IuReleaseRequestCsNrnc.NoResourceAvailable

Source Section

NeighbouringRnc

IuReleaseRequestCsNrncOamIntervention

Number of RANAP/IU_RELEASE_REQUEST messages sent by RNC to CS Core Network when the reference cell is located on a Drift RNC. (OamIntervention)

Data Source

RNC C-Node

Source Field

VS.IuReleaseRequestCsNrnc.OamIntervention

Source Section

NeighbouringRnc

IuReleaseRequestCsNrncOtherCause

Number of RANAP/IU_RELEASE_REQUEST messages sent by RNC to CS Core Network when the reference cell is located on a Drift RNC. (OtherCause)

Data Source

RNC C-Node

Source Field

VS.IuReleaseRequestCsNrnc.OtherCause

Source Section

NeighbouringRnc

IuReleaseRequestCsNrncRadioConnectionWithUeLost

Number of RANAP/IU_RELEASE_REQUEST messages sent by RNC to CS Core Network when the reference cell is located on a Drift RNC. (RadioConnectionWithUeLost)

Data Source

RNC C-Node

Source Field

VS.IuReleaseRequestCsNrnc.RadioConnectionWithUeLost

Source Section

NeighbouringRnc

IuReleaseRequestCsNrncReleaseDueToUtranGeneratedReason

Number of RANAP/IU_RELEASE_REQUEST messages sent by RNC to CS Core Network when the reference cell is located on a Drift RNC. (ReleaseDueToUtranGeneratedReason)

Data Source

RNC C-Node

Source Field

VS.IuReleaseRequestCsNrnc.ReleaseDueToUtranGeneratedReason

Source Section

NeighbouringRnc

IuReleaseRequestCsNrncRepeatedIntegrityCheckFailure

Number of RANAP/IU_RELEASE_REQUEST messages sent by RNC to CS Core Network when the reference cell is located on a Drift RNC. (RepeatedIntegrityCheckFailure)

Data Source

RNC C-Node

Source Field

VS.IuReleaseRequestCsNrnc.RepeatedIntegrityCheckFailure

Source Section

NeighbouringRnc

IuReleaseRequestCsNrncT360Expiry

Number of RANAP/IU_RELEASE_REQUEST messages sent by RNC to CS Core Network when the reference cell is located on a Drift RNC. (T360Expiry)

Data Source

RNC C-Node

Source Field

VS.IuReleaseRequestCsNrnc.T360Expiry

Source Section

NeighbouringRnc

IuReleaseRequestCsNrncUeGeneratedSignallingConnectionRelease

Number of RANAP/IU_RELEASE_REQUEST messages sent by RNC to CS Core Network when the reference cell is located on a Drift RNC. (UeGeneratedSignallingConnectionRelease)

Data Source

RNC C-Node

Source Field

VS.IuReleaseRequestCsNrnc.UeGeneratedSignallingConnectionRelease

Source Section

NeighbouringRnc

IuReleaseRequestCsNrncUlRLCErrSRB

Number of RANAP/IU_RELEASE_REQUEST messages sent by RNC to CS Core Network when the reference cell is located on a Drift RNC. (UlRLCErrSRB)

Data Source

RNC C-Node

Source Field

VS.IuReleaseRequestCsNrnc.UlRLCErrSRB

Source Section

NeighbouringRnc

IuReleaseRequestCsNrncUnspecifiedFailure

Number of RANAP/IU_RELEASE_REQUEST messages sent by RNC to CS Core Network when the reference cell is located on a Drift RNC. (UnspecifiedFailure)

Data Source

RNC C-Node

Source Field

VS.IuReleaseRequestCsNrnc.UnspecifiedFailure

Source Section

NeighbouringRnc

IuReleaseRequestPsNrncAbnormalConditionTimerRelocExpiry

Number of RANAP/IU_RELEASE_REQUEST messages sent by RNC to PS Core Network when the reference cell is located on a Drift RNC. (AbnormalConditionTimerRelocExpiry)

Data Source

RNC C-Node

Source Field

VS.IuReleaseRequestPsNrnc.AbnormalConditionTimerRelocExpiry

Source Section

NeighbouringRnc

IuReleaseRequestPsNrncConnectionWithNodeBLost

Number of RANAP/IU_RELEASE_REQUEST messages sent by RNC to PS Core Network when the reference cell is located on a Drift RNC. (ConnectionWithNodeBLost)

Data Source

RNC C-Node

Source Field

VS.IuReleaseRequestPsNrnc.ConnectionWithNodeBLost

Source Section

NeighbouringRnc

IuReleaseRequestPsNrncDlRLCErrSRB

Number of RANAP/IU_RELEASE_REQUEST messages sent by RNC to PS Core Network when the reference cell is located on a Drift RNC. (DlRLCErrSRB)

Data Source

RNC C-Node

Source Field

VS.IuReleaseRequestPsNrnc.DlRLCErrSRB

Source Section

NeighbouringRnc

IuReleaseRequestPsNrncDlRLCErrTRB

Number of RANAP/IU_RELEASE_REQUEST messages sent by RNC to PS Core Network when the reference cell is located on a Drift RNC. (DlRLCErrTRB)

Data Source

RNC C-Node

Source Field

VS.IuReleaseRequestPsNrnc.DlRLCErrTRB

Source Section

NeighbouringRnc

IuReleaseRequestPsNrncFailureInTheRadioInterfaceProcedure

Number of RANAP/IU_RELEASE_REQUEST messages sent by RNC to PS Core Network when the reference cell is located on a Drift RNC. (FailureInTheRadioInterfaceProcedure)

Data Source

RNC C-Node

Source Field

VS.IuReleaseRequestPsNrnc.FailureInTheRadioInterfaceProcedure

Source Section

NeighbouringRnc

IuReleaseRequestPsNrncIuUserPlaneFailure

Number of RANAP/IU_RELEASE_REQUEST messages sent by RNC to PS Core Network when the reference cell is located on a Drift RNC. (IuUserPlaneFailure)

Data Source

RNC C-Node

Source Field

VS.IuReleaseRequestPsNrnc.IuUserPlaneFailure

Source Section

NeighbouringRnc

IuReleaseRequestPsNrncNoRemainingRAB

Number of RANAP/IU_RELEASE_REQUEST messages sent by RNC to PS Core Network when the reference cell is located on a Drift RNC. (NoRemainingRAB)

Data Source

RNC C-Node

Source Field

VS.IuReleaseRequestPsNrnc.NoRemainingRAB

Source Section

NeighbouringRnc

IuReleaseRequestPsNrncNoResourceAvailable

Number of RANAP/IU_RELEASE_REQUEST messages sent by RNC to PS Core Network when the reference cell is located on a Drift RNC. (NoResourceAvailable)

Data Source

RNC C-Node

Source Field

VS.IuReleaseRequestPsNrnc.NoResourceAvailable

Source Section

NeighbouringRnc

IuReleaseRequestPsNrncOamIntervention

Number of RANAP/IU_RELEASE_REQUEST messages sent by RNC to PS Core Network when the reference cell is located on a Drift RNC. (OamIntervention)

Data Source

RNC C-Node

Source Field

VS.IuReleaseRequestPsNrnc.OamIntervention

Source Section

NeighbouringRnc

IuReleaseRequestPsNrncOtherCause

Number of RANAP/IU_RELEASE_REQUEST messages sent by RNC to PS Core Network when the reference cell is located on a Drift RNC. (OtherCause)

Data Source

RNC C-Node

Source Field

VS.IuReleaseRequestPsNrnc.OtherCause

Source Section

NeighbouringRnc

IuReleaseRequestPsNrncRadioCnxUeLost

Number of RANAP/IU_RELEASE_REQUEST messages sent by RNC to PS Core Network when the reference cell is located on a Drift RNC. (RadioCnxUeLost)

Data Source

RNC C-Node

Source Field

VS.IuReleaseRequestPsNrnc.RadioCnxUeLost

Source Section

NeighbouringRnc

IuReleaseRequestPsNrncReleaseDueToUtranGeneratedReason

Number of RANAP/IU_RELEASE_REQUEST messages sent by RNC to PS Core Network when the reference cell is located on a Drift RNC. (ReleaseDueToUtranGeneratedReason)

Data Source

RNC C-Node

Source Field

VS.IuReleaseRequestPsNrnc.ReleaseDueToUtranGeneratedReason

Source Section

NeighbouringRnc

IuReleaseRequestPsNrncRepeatedIntegrityCheckFailure

Number of RANAP/IU_RELEASE_REQUEST messages sent by RNC to PS Core Network when the reference cell is located on a Drift RNC. (RepeatedIntegrityCheckFailure)

Data Source

RNC C-Node

Source Field

VS.IuReleaseRequestPsNrnc.RepeatedIntegrityCheckFailure

Source Section

NeighbouringRnc

IuReleaseRequestPsNrncT360Expiry

Number of RANAP/IU_RELEASE_REQUEST messages sent by RNC to PS Core Network when the reference cell is located on a Drift RNC. (T360Expiry)

Data Source

RNC C-Node

Source Field

VS.IuReleaseRequestPsNrnc.T360Expiry

Source Section

NeighbouringRnc

IuReleaseRequestPsNrncUeGeneratedSignallingConnectionRelease

Number of RANAP/IU_RELEASE_REQUEST messages sent by RNC to PS Core Network when the reference cell is located on a Drift RNC. (UeGeneratedSignallingConnectionRelease)

Data Source

RNC C-Node

Source Field

VS.IuReleaseRequestPsNrnc.UeGeneratedSignallingConnectionRelease

Source Section

NeighbouringRnc

IuReleaseRequestPsNrncUlRLCErrSRB

Number of RANAP/IU_RELEASE_REQUEST messages sent by RNC to PS Core Network when the reference cell is located on a Drift RNC. (UlRLCErrSRB)

Data Source

RNC C-Node

Source Field

VS.IuReleaseRequestPsNrnc.UlRLCErrSRB

Source Section

NeighbouringRnc

IuReleaseRequestPsNrncUlRLCErrTRB

Number of RANAP/IU_RELEASE_REQUEST messages sent by RNC to PS Core Network when the reference cell is located on a Drift RNC. (UlRLCErrTRB)

Data Source

RNC C-Node

Source Field

VS.IuReleaseRequestPsNrnc.UlRLCErrTRB

Source Section

NeighbouringRnc

IuReleaseRequestPsNrncUnspecifiedFailure

Number of RANAP/IU_RELEASE_REQUEST messages sent by RNC to PS Core Network when the reference cell is located on a Drift RNC. (UnspecifiedFailure)

Data Source

RNC C-Node

Source Field

VS.IuReleaseRequestPsNrnc.UnspecifiedFailure

Source Section

NeighbouringRnc

IuReleaseRequestPsNrncUserInactivity

Number of RANAP/IU_RELEASE_REQUEST messages sent by RNC to PS Core Network when the reference cell is located on a Drift RNC. (UserInactivity)

Data Source

RNC C-Node

Source Field

VS.IuReleaseRequestPsNrnc.UserInactivity

Source Section

NeighbouringRnc

IurEmittedSccpAbnormalDisconnectsEndUserCongestion

Number of emitted abnormal sccp disconnections (SCCP_DISC_REQ) on Iur interface (EndUserCongestion)

Data Source

RNC C-Node

Source Field

VS.IurEmittedSccpAbnormalDisconnects.EndUserCongestion

Source Section

NeighbouringRnc

IurEmittedSccpAbnormalDisconnectsEndUserFailure

Number of emitted abnormal sccp disconnections (SCCP_DISC_REQ) on Iur interface (EndUserFailure)

Data Source

RNC C-Node

Source Field

VS.IurEmittedSccpAbnormalDisconnects.EndUserFailure

Source Section

NeighbouringRnc

IurEmittedSccpAbnormalDisconnectsEndUserOriginated

Number of emitted abnormal sccp disconnections (SCCP_DISC_REQ) on Iur interface (EndUserOriginated)

Data Source

RNC C-Node

Source Field

VS.IurEmittedSccpAbnormalDisconnects.EndUserOriginated

Source Section

NeighbouringRnc

IurReceivedSccpAbnormalDisconnects

Number of received abnormal sccp disconnections (SCCP_DISC_IND) on Iur interface (IurReceivedSccpAbnormalDisconnects)

Data Source

RNC C-Node

Source Field

VS.IurReceivedSccpAbnormalDisconnects

Source Section

NeighbouringRnc

IurSccpCnxSuccessEstablishedAsDriftRnc

Number of successful sccp connection at Iur interface (EstablishedAsDriftRnc)

Data Source

RNC C-Node

Source Field

VS.IurSccpCnxSuccess.EstablishedAsDriftRnc

Source Section

NeighbouringRnc

IurSccpCnxSuccessEstablishedAsServingRnc

Number of successful sccp connection at Iur interface (EstablishedAsServingRnc)

Data Source

RNC C-Node

Source Field

VS.IurSccpCnxSuccess.EstablishedAsServingRnc

Source Section

NeighbouringRnc

IurSccpCnxUnsuccessFailConnectionReqByLocalIRncOnIur

Number of unsuccessful sccp connection at Iur interface (FailConnectionReqByLocalIRncOnIur)

Data Source

RNC C-Node

Source Field

VS.IurSccpCnxUnsuccess.FailConnectionReqByLocalIRncOnIur

Source Section

NeighbouringRnc

IurSccpCnxUnsuccessFailConnectionReqByNeighbouringIRncOnIur

Number of unsuccessful sccp connection at Iur interface (FailConnectionReqByNeighbouringIRncOnIur)

Data Source

RNC C-Node

Source Field

VS.IurSccpCnxUnsuccess.FailConnectionReqByNeighbouringIRncOnIur

Source Section

NeighbouringRnc

IurSrncRelocCommit

Number of Relocation Commit messages sent over IuR. (IurSrncRelocCommit)

Data Source

RNC C-Node

Source Field

VS.IurSrncRelocCommit

Source Section

NeighbouringRnc

LSGPSAttCSNEmSrvNeighbRnc

Number of GPS positioning attempts for non-emergency services initiated through CS. (NeighbRnc)

Data Source

RNC C-Node

Source Field

VS.LS.GPSAttCS.NEmSrv.NeighbRnc

Source Section

NeighbouringRnc

LSGPSAttEmSrvNeighbRnc

Number of GPS positioning attempts for emergency services (NeighbRnc)

Data Source

RNC C-Node

Source Field

VS.LS.GPSAtt.EmSrv.NeighbRnc

Source Section

NeighbouringRnc

LSGPSCancelCSNEmSrvNeighbRnc

Number of GPS attempts for non-emergency services cancelled either due to normal call termination based on Iu Release Command or on MSC request. (NeighbRnc)

Data Source

RNC C-Node

Source Field

VS.LS.GPSCancelCS.NEmSrv.NeighbRnc

Source Section

NeighbouringRnc

LSGPSCancelEmSrvNeighbRnc

Number of GPS attempts for emergency services cancelled either due to normal call termination based on Iu Release Command or on CN request. (NeighbRnc)

Data Source

RNC C-Node

Source Field

VS.LS.GPSCancel.EmSrv.NeighbRnc

Source Section

NeighbouringRnc

LSGPSSuccCSNEmSrvNeighbRnc

Number of successful GPS attempts for non-emergency services initiated through CS. (NeighbRnc)

Data Source

RNC C-Node

Source Field

VS.LS.GPSSuccCS.NEmSrv.NeighbRnc

Source Section

NeighbouringRnc

LSGPSSuccEmSrvNeighbRnc

Number of successful GPS attempts for emergency services (NeighbRnc)

Data Source

RNC C-Node

Source Field

VS.LS.GPSSucc.EmSrv.NeighbRnc

Source Section

NeighbouringRnc

MeasCallFailTraceDetectNeighRNCFullEvt

Indication of at least one available Call Failure Trace due to a Detected Cell. (FullEvt)

Data Source

RNC C-Node

Source Field

VS.MeasCallFailTraceDetectNeighRNC.FullEvt

Source Section

NeighbouringRnc

MeasCallFailTraceDetectNeighRNCOtherEvt

Indication of at least one available Call Failure Trace due to a Detected Cell. (OtherEvt)

Data Source

RNC C-Node

Source Field

VS.MeasCallFailTraceDetectNeighRNC.OtherEvt

Source Section

NeighbouringRnc

MeasEvent1ANeighRNC

Number of Event 1A triggered by a Cell of the Monitored Set (used to add RL on relative threshold criteria). The Primary RL of the UE is on this NeighBouring RNC. (MeasEvent1ANeighRNC)

Data Source

RNC C-Node

Source Field

VS.MeasEvent1ANeighRNC

Source Section

NeighbouringRnc

MeasEvent1BNeighRNC

Number of Event 1B (used to delete RL on relative threshold criteria). (MeasEvent1BNeighRNC)

Data Source

RNC C-Node

Source Field

VS.MeasEvent1BNeighRNC

Source Section

NeighbouringRnc

MeasEvent1CNeighRNC

Number of Event 1C (used to add RL and delete RL on relative threshold criteria). (MeasEvent1CNeighRNC)

Data Source

RNC C-Node

Source Field

VS.MeasEvent1CNeighRNC

Source Section

NeighbouringRnc

MeasEvent1DNeighRNC

Number of Event 1D (used to change Primary RL on relative threshold criteria). (MeasEvent1DNeighRNC)

Data Source

RNC C-Node

Source Field

VS.MeasEvent1DNeighRNC

Source Section

NeighbouringRnc

MeasEvent1ENeighRNC

Number of Event 1E triggered by a Cell of the Monitored Set (used to add RL on absolute threshold criteria). (MeasEvent1ENeighRNC)

Data Source

RNC C-Node

Source Field

VS.MeasEvent1ENeighRNC

Source Section

NeighbouringRnc

MeasEvent1FNeighRNC

Number of Event 1D (used to delete RL on absolute threshold criteria). (MeasEvent1FNeighRNC)

Data Source

RNC C-Node

Source Field

VS.MeasEvent1FNeighRNC

Source Section

NeighbouringRnc

MeasEvent2DNeighRNCCpichEcNo

Number of Event 2D (used for Alarm Measurement Criteria). (CpichEcNo)

Data Source

RNC C-Node

Source Field

VS.MeasEvent2DNeighRNC.CpichEcNo

Source Section

NeighbouringRnc

MeasEvent2DNeighRNCCpichRscp

Number of Event 2D (used for Alarm Measurement Criteria). (CpichRscp)

Data Source

RNC C-Node

Source Field

VS.MeasEvent2DNeighRNC.CpichRscp

Source Section

NeighbouringRnc

MeasEvent2FNeighRNCCpichEcNo

Number of Event 2F (used for Alarm Measurement Criteria). (CpichEcNo)

Data Source

RNC C-Node

Source Field

VS.MeasEvent2FNeighRNC.CpichEcNo

Source Section

NeighbouringRnc

MeasEvent2FNeighRNCCpichRscp

Number of Event 2F (used for Alarm Measurement Criteria). (CpichRscp)

Data Source

RNC C-Node

Source Field

VS.MeasEvent2FNeighRNC.CpichRscp

Source Section

NeighbouringRnc

MeasEvent6ANRNC

Number of Event 6A (used for Alarm Measurement Criteria) (MeasEvent6ANRNC)

Data Source

RNC C-Node

Source Field

VS.MeasEvent6ANRNC

Source Section

NeighbouringRnc

MeasEvent6BNRNC

Number of Event 6B (used for Alarm Measurement Criteria) (MeasEvent6BNRNC)

Data Source

RNC C-Node

Source Field

VS.MeasEvent6BNRNC

Source Section

NeighbouringRnc

MM_RRC_ConnDrop_CellReselDRNC

Number of Pre-emptively Dropped RRC Connection due to DRNC move in URA_PCH

Data Source

RNC

Source Field

VS.MM.RRC.ConnDrop.CellReselDRNC

Source Section

Dropped RRC Connections

MM_RRC_ConnDrop_HSDSCH_DCH

Number of Dropped RRC Connections during HS-DSCH to DCH reconfiguration.

Data Source

RNC

Source Field

VS.MM.RRC.ConnDrop.HSDSCH_DCH

Source Section

Radio Bearer Reconfiguration HS-DSCH to DCH

MM_RRC_ConnDrop_UE_Inactivity

Number of dropped RRC Connections due to non-URA_PCH timeout

Data Source

RNC

Source Field

VS.MM.RRC.ConnDrop.UE_Inactivity

Source Section

Dropped RRC Connections

NumInterRNCSHOFail_NoReply

Retired fr 3.0.6.0.0 - Number of Failed Inter-RNC Soft/Softer Handover Attempts due to Failure cause 'No reply' for any service

Data Source

RNC

Source Field

NumInterRNCSHOFail.NoReply

Source Section

Inter RNC Soft/Softer Handover

NumInterRNCSHOFail_UERej

Retired fr 3.0.6.0.0 - Number of Failed Inter-RNC Soft/Softer Handover Attempts due to Failure cause 'UE Reject' for any service

Data Source

RNC

Source Field

NumInterRNCSHOFail.UERej

Source Section

Inter RNC Soft/Softer Handover

NumRBReconfAtt_DCH_Dec

Number of Data Rate Reconfiguration Attempts made by the RNC in Cell DCH to decrease the data rate

Data Source

RNC

Source Field

NumRBReconfAtt.DCH_Dec

Source Section

Radio Resource Management - RB Reconfiguration Counters

NumRBReconfFail_DCH_Fail

Number of data rate reconfigurations attempts in Cell DCH, which have failed

Data Source

RNC

Source Field

NumRBReconfFail.DCH_Fail

Source Section

Radio Resource Management - RB Reconfiguration Counters

RAB_AttEstabCS_ConvData

Succeeded by:RAB_AttEstabCS_CSD. Number of RAB Establishment Attempts for CSD

Data Source

RNC

Source Field

RAB.AttEstabCS.ConvData

Source Section

RAB Establishment Attempts

RAB_AttEstabCS_ConvVoice

Succeeded by:RAB_AttEstabCS_CSV. Number of RAB Establishment Attempts for CSV

Data Source

RNC

Source Field

RAB.AttEstabCS.ConvVoice

Source Section

RAB Establishment Attempts

RAB_AttEstabCS_CSD

Number of RAB Establishment Attempts for CSD

Data Source

RNC

Source Field

RAB.AttEstabCS.CSD

Source Section

RAB Establishment Attempts

RAB_AttEstabCS_CSV

Number of RAB Establishment Attempts for CSV

Data Source

RNC

Source Field

RAB.AttEstabCS.CSV

Source Section

RAB Establishment Attempts

RAB_AttEstabPS_Bgrd

Number of RAB Establishment Attempts for PS with QoS Class Background

Data Source

RNC

Source Field

RAB.AttEstabPS.Bgrd

Source Section

RAB Establishment Attempts

RAB_AttEstabPS_DataRateGT384

Number of RAB Establishment Attempts for PS > 384 kbps

Data Source

RNC

Source Field

RAB.AttEstabPS.DataRateGT384

Source Section

RAB Establishment Attempts

RAB_AttEstabPS_DataRateGT64LE384

Number of RAB Establishment Attempts for PS data rates 64 < x <= 384 kbps

Data Source

RNC

Source Field

RAB.AttEstabPS.DataRateGT64LE384

Source Section

RAB Establishment Attempts

RAB_AttEstabPS_DataRateLE64

Number of RAB Establishment Attempts for PS data rates <= 64 kbps

Data Source

RNC

Source Field

RAB.AttEstabPS.DataRateLE64

Source Section

RAB Establishment Attempts

RAB_AttEstabPS_DCH_DCH

Number of RAB Establishment Attempts for PS data mapped on DCH transport channels in UL and DL

Data Source

RNC

Source Field

RAB.AttEstabPS.DCH_DCH

Source Section

RncFunction

RAB_AttEstabPS_DCH_HSDSCH

Number of RAB Establishment Attempts for PS data mapped on DCH/HS-DSCH transport channels

Data Source

RNC

Source Field

RAB.AttEstabPS.DCH_HSDSCH

Source Section

RncFunction

RAB_AttEstabPS_DCH_HSDSCH_Conf_DCH_DCH

Number of RAB Establishment Attempts for PS data mapped on DCH/DCH instead of DCH/HSDSCH transport channels

Data Source

RNC

Source Field

VS.RAB.AttEstabPS.DCH_HSDSCH.Conf.DCH_DCH

Source Section

RncFunction

RAB_AttEstabPS_Intact

Number of RAB Establishment Attempts for PS with QoS Class Interactive

Data Source

RNC

Source Field

RAB.AttEstabPS.Intact

Source Section

RAB Establishment Attempts

RAB_AttEstabPS_Multiple

Number of Establishment Attempts for Multiple PS I/B RABs

Data Source

RNC

Source Field

VS.RAB.AttEstabPS.Multiple

Source Section

RAB Establishment Attempts

RAB_AttEstabPS_Strm

Number of RAB Establishment Attempts for PS with QoS Class Streaming

Data Source

RNC

Source Field

RAB.AttEstabPS.Strm

Source Section

RAB Establishment Attempts

RAB_Drop_CN_Init_CS

CN Initiated Dropped RABs for CS Services

Data Source

RNC

Source Field

VS.RAB.Drop.CN_Init.CS

Source Section

RncFunction

RAB_Drop_CN_Init_PS_Cell_DCH_DCH_DCH

CN Initiated Dropped RABs for PS Services for UEs in Cell_DCH with UL/DL DCH Transport Channel

Data Source

RNC

Source Field

VS.RAB.Drop.CN_Init.PS.Cell_DCH.DCH_DCH

Source Section

RncFunction

RAB_Drop_CN_Init_PS_Cell_DCH_DCH_HSDSCH

CN Initiated Dropped RABs for PS Services for UEs in Cell_DCH with DCH/HSDSCH Transport Channel

Data Source

RNC

Source Field

VS.RAB.Drop.CN_Init.PS.Cell_DCH.DCH_HSDSCH

Source Section

RncFunction

RAB_Drop_CS_CodecChange

Dropped CS RABs during AMR Codec Change due to IU Rate Control Failure

Data Source

RNC

Source Field

VS.RAB.Drop.CS.CodecChange

Source Section

Dropped RABs

RAB_Drop_CS_DLPwr

Number of Dropped CS RABs due to DL Power (DL Load)

Data Source

RNC

Source Field

VS.RAB.Drop.CS.DLPwr

Source Section

Dropped RABs

RAB_Drop_CS_DLRLCFail_DCCH

Number of Dropped CS RAB Connections due to DL RLC failure on DCCH (RNC detected)

Data Source

RNC

Source Field

VS.RAB.Drop.CS.DLRLCFail.DCCH

Source Section

RncFunction

RAB_Drop_CS_InterFreqHHO

Number of dropped CS RABs due to Inter-frequency Hard Handover

Data Source

RNC

Source Field

VS.RAB.Drop.CS.InterFreqHHO

Source Section

Dropped RABs

RAB_Drop_CS_RelocUEInvol

Number of Dropped CS RABs due to SRNS relocation UE Involved

Data Source

RNC

Source Field

VS.RAB.Drop.CS.RelocUEInvol

Source Section

Dropped RABs

RAB_Drop_CS_ULIntfer

Number of Dropped CS RABs due to UL Interference (UL Load)

Data Source

RNC

Source Field

VS.RAB.Drop.CS.ULIntfer

Source Section

Dropped RABs

RAB_Drop_CSD

Total Number of Dropped RABs for CS Data

Data Source

RNC

Source Field

VS.RAB.Drop.CSD

Source Section

Dropped RABs

RAB_Drop_CSD_CauseULRLF

Number of Dropped CS Data RABs caused by Uplink Radio Link Failure due to loss of Synchronisation

Data Source

RNC

Source Field

VS.RAB.Drop.CSD.CauseULRLF

Source Section

Dropped RABs

RAB_Drop_CSV

Total Number of Dropped RABs for CS Voice

Data Source

RNC

Source Field

VS.RAB.Drop.CSV

Source Section

Dropped RABs

RAB_Drop_CSV_CauseULRLF

Number of Dropped CS Voice RABs caused by Uplink Radio Link Failure due to Loss of Synchronisation

Data Source

RNC

Source Field

VS.RAB.Drop.CSV.CauseULRLF

Source Section

Dropped RABs

RAB_Drop_OpInterv

Number of Dropped RABs due to operator intervention

Data Source

RNC

Source Field

VS.RAB.Drop.OpInterv

Source Section

Dropped RABs

RAB_Drop_PS_Cell_DCH

Number of Dropped RABs for PS Data for UEs in Cell_DCH

Data Source

RNC

Source Field

VS.RAB.Drop.PS.Cell_DCH

Source Section

Dropped RABs

RAB_Drop_PS_Cell_DCH_DCH_DCH

Number of Dropped RABs for PS Data for UEs in Cell_DCH with RAB on UL/DL DCH transport channels

Data Source

RNC

Source Field

VS.RAB.Drop.PS.Cell_DCH.DCH_DCH

Source Section

RncFunction

RAB_Drop_PS_Cell_DCH_DCH_HSDSCH

Number of Dropped RABs for PS Data for UEs in Cell_DCH with RAB on UL/DL DCH/ HSDSCH transport channels

Data Source

RNC

Source Field

VS.RAB.Drop.PS.Cell_DCH.DCH_HSDSCH

Source Section

RncFunction

RAB_Drop_PS_DCH_CauseULRLF

Number of Dropped PS RABs mapped onto a DCH Transport Channel caused by Uplink Radio Link Failure due to loss of synchronisation

Data Source

RNC

Source Field

VS.RAB.Drop.PS.DCH.CauseULRLF

Source Section

Dropped RABs

RAB_Drop_PS_DLPwr

Number of Dropped PS RABs due to DL Power (DL Load)

Data Source

RNC

Source Field

VS.RAB.Drop.PS.DLPwr

Source Section

Dropped RABs

RAB_Drop_PS_DLRLCFail_DCCH

Number of Dropped PS RAB Connections due to DL RLC failure on DCCH (RNC detected)

Data Source

RNC

Source Field

VS.RAB.Drop.PS.DLRLCFail.DCCH

Source Section

RncFunction

RAB_Drop_PS_DLRLCFail_DTCH

Number of Dropped PS RAB Connections due to DL RLC failure on DTCH (RNC detected)

Data Source

RNC

Source Field

VS.RAB.Drop.PS.DLRLCFail.DTCH

Source Section

RncFunction

RAB_Drop_PS_HSDSCH_CauseULRLF

Number of Dropped PS RABs mapped onto a HS-DSCH Transport Channel caused by Uplink Radio Link Failure due to loss of synchronisation

Data Source

RNC

Source Field

VS.RAB.Drop.PS.HSDSCH.CauseULRLF

Source Section

RncFunction

RAB_Drop_PS_HSDSCH_CauseULRLF_ReconfFail

Number of Dropped PS RABs mapped onto a HS-DSCH Transport Channels caused by unsuccessful reconfiguration from HS_DSCH to DCH following Uplink Radio Link Failure due to loss of synchronisation

Data Source

RNC

Source Field

VS.RAB.Drop.PS.HSDSCH.CauseULRLF.ReconfFail

Source Section

RncFunction

RAB_Drop_PS_InterFreqHHO

Number of dropped PS RABs due to Inter-frequency Hard Handover

Data Source

RNC

Source Field

VS.RAB.Drop.PS.InterFreqHHO

Source Section

Dropped RABs

RAB_Drop_PS_MPDPNotSup

Number of dropped RAB connections for service type PS when multiple PDP contexts exist and the RNC triggers a RAB Release Request due to normal Radio Resource Management reasons.

Data Source

RNC

Source Field

VS.RAB.Drop.PS.MPDPNotSup

Source Section

Dropped RABs

RAB_Drop_PS_RelocUEInvol

Number of Dropped PS RABs due to SRNS relocation UE Involved

Data Source

RNC

Source Field

VS.RAB.Drop.PS.RelocUEInvol

Source Section

Dropped RABs

RAB_Drop_PS_ULIntfer

Number of Dropped PS RABs due to UL Interference (UL Load)

Data Source

RNC

Source Field

VS.RAB.Drop.PS.ULIntfer

Source Section

Dropped RABs

RAB_Drop_Reconf_DCH_HSDSCH

Number of Dropped PS RAB Connections during DCH to HS-DSCH

Data Source

RNC

Source Field

VS.RAB.Drop.Reconf.DCH_HSDSCH

Source Section

RncFunction

RAB_Drop_Reconf_HSDSCH_DCH

Number of Dropped PS RAB Connections during HS-DSCH to DCH

Data Source

RNC

Source Field

VS.RAB.Drop.Reconf.HSDSCH_DCH

Source Section

RncFunction

RAB_Drop_UEInactivity

Number of Dropped RABs due to UE inactivity

Data Source

RNC

Source Field

VS.RAB.Drop.UEInactivity

Source Section

Dropped RABs

RAB_Drop_UESigConnRel

Number of Dropped RABs due to a release of the signalling connection by the UE

Data Source

RNC

Source Field

VS.RAB.Drop.UESigConnRel

Source Section

Dropped RABs

RAB_Drop_UETransDrnc

Number of Dropped RABs due to a transition from CELL_DCH to URA_PCH or CELL_FACH when best cell is on DRNC

Data Source

RNC

Source Field

VS.RAB.Drop.UETransDrnc

Source Section

Dropped RABs

RAB_FailEstabCSNoQueuing_CodeStarv

Number of CS RAB Establishment Failures due to Code Starvation

Data Source

RNC

Source Field

RAB.FailEstabCSNoQueuing.CodeStarv

Source Section

RAB Establishment Failures

RAB_FailEstabCSNoQueuing_ConvData

Succeeded by:RAB_FailEstabCSNoQueuing_CSD. RAB Establishment Failures - no Queuing - for CSD

Data Source

RNC

Source Field

RAB.FailEstabCSNoQueuing.ConvData

Source Section

RAB Establishment Failures

RAB_FailEstabCSNoQueuing_ConvVoice

Succeeded by:RAB_FailEstabCSNoQueuing_CSV. RAB Establishment Failures - no Queuing - for CSV

Data Source

RNC

Source Field

RAB.FailEstabCSNoQueuing.ConvVoice

Source Section

RAB Establishment Failures

RAB_FailEstabCSNoQueuing_CSD

RAB Establishment Failures - no Queuing - for CSD

Data Source

RNC

Source Field

RAB.FailEstabCSNoQueuing.CSD

Source Section

RAB Establishment Failures

RAB_FailEstabCSNoQueuing_CSV

RAB Establishment Failures - no Queuing - for CSV

Data Source

RNC

Source Field

RAB.FailEstabCSNoQueuing.CSV

Source Section

RAB Establishment Failures

RAB_FailEstabCSNoQueuing_DLPwr

Number of CS RAB Establishment Failures due to DL Power (DL Load)

Data Source

RNC

Source Field

RAB.FailEstabCSNoQueuing.DLPwr

Source Section

RAB Establishment Failures

RAB_FailEstabCSNoQueuing_RBSetupFail

Number of CS RAB Establishment Failures due to RB Setup Failure

Data Source

RNC

Source Field

RAB.FailEstabCSNoQueuing.RBSetupFail

Source Section

RAB Establishment Failures

RAB_FailEstabCSNoQueuing_RLReconfigFail

CS RAB Establishment Failures due to RL Reconfiguration Failure - excluding NodeB Errors

Data Source

RNC

Source Field

RAB.FailEstabCSNoQueuing.RLReconfigFail

Source Section

RncFunction

RAB_FailEstabCSNoQueuing_T3exp

Number of CS RAB Establishment Failures due to Timer T3 Expiry

Data Source

RNC

Source Field

RAB.FailEstabCSNoQueuing.T3exp

Source Section

RAB Establishment Failures

RAB_FailEstabCSNoQueuing_ULIntfer

Number of CS RAB Establishment Failures due to UL interference (UL load)

Data Source

RNC

Source Field

RAB.FailEstabCSNoQueuing.ULIntfer

Source Section

RAB Establishment Failures

RAB_FailEstabPS_HSDPA_UE

Number of Call Setup failures for an HSDPA capable UE

Data Source

RNC

Source Field

RAB.FailEstabPS.HSDPA_UE

Source Section

HSDPA resource related Performance Measurements

RAB_FailEstabPSNoQue_DataRateGT64LE384

Number of RAB Establishment Failures for PS data rates 64<x<=384 kbps

Data Source

RNC

Source Field

RAB.FailEstabPSNoQueuing.DataRateGT64LE384

Source Section

RAB Establishment Failures

RAB_FailEstabPSNoQue_nonHSDPA_ReqGT384

Number of PS RAB Establishment Failures due to Data Rate Exceeding non-HSDPA UE Capability

Data Source

RNC

Source Field

RAB.FailEstabPSNoQueuing.nonHSDPA_UE_ReqGT384

Source Section

RAB Establishment Failures

RAB_FailEstabPSNoQueuing_Bgrd

RAB Establishment Failures - no Queuing - for PS RAB with QoS Class Background

Data Source

RNC

Source Field

RAB.FailEstabPSNoQueuing.Bgrd

Source Section

RAB Establishment Failures

RAB_FailEstabPSNoQueuing_CodeStarv

Number of PS RAB Establishment Failures due to Code Starvation

Data Source

RNC

Source Field

RAB.FailEstabPSNoQueuing.CodeStarv

Source Section

RAB Establishment Failures

RAB_FailEstabPSNoQueuing_DataRateGT384

Number of RAB Establishment Failures for PS > 384 kbps

Data Source

RNC

Source Field

RAB.FailEstabPSNoQueuing.DataRateGT384

Source Section

RAB Establishment Failures

RAB_FailEstabPSNoQueuing_DataRateLE64

Number of RAB Establishment Failures for PS data rates <= 64 kbps

Data Source

RNC

Source Field

RAB.FailEstabPSNoQueuing.DataRateLE64

Source Section

RAB Establishment Failures

RAB_FailEstabPSNoQueuing_DLPwr

Number of PS RAB Establishment Failures due to DL Power (DL Load)

Data Source

RNC

Source Field

RAB.FailEstabPSNoQueuing.DLPwr

Source Section

RAB Establishment Failures

RAB_FailEstabPSNoQueuing_Intact

RAB Establishment Failures - no Queuing - for PS RAB with QoS Class Interactive

Data Source

RNC

Source Field

RAB.FailEstabPSNoQueuing.Intact

Source Section

RAB Establishment Failures

RAB_FailEstabPSNoQueuing_RBSetupFail

Number of PS RAB Establishment Failures due to RB Setup Failure

Data Source

RNC

Source Field

RAB.FailEstabPSNoQueuing.RBSetupFail

Source Section

RAB Establishment Failures

RAB_FailEstabPSNoQueuing_RLReconfigFail

PS RAB Establishment Failures due to RL Reconfiguration Failure - excluding NodeB Errors

Data Source

RNC

Source Field

RAB.FailEstabPSNoQueuing.RLReconfigFail

Source Section

RncFunction

RAB_FailEstabPSNoQueuing_ServComb

Number of PS RAB Establishment Failures due to Lack of Service Combination Support

Data Source

RNC

Source Field

RAB.FailEstabPSNoQueuing.ServComb

Source Section

RAB Establishment Failures

RAB_FailEstabPSNoQueuing_Strm

Number of RAB Establishment Failures for PS RAB with QoS Class Streaming

Data Source

RNC

Source Field

RAB.FailEstabPSNoQueuing.Strm

Source Section

RAB Establishment Failures

RAB_FailEstabPSNoQueuing_StrmNoBitrate

Number of PS RAB Establishment Failures for QoS Class Streaming - Requested Guaranteed Bit Rate Not Available

Data Source

RNC

Source Field

RAB.FailEstabPSNoQueuing.StrmNoBitrate

Source Section

RAB Establishment Failures

RAB_FailEstabPSNoQueuing_T3exp

Number of PS RAB Establishment Failures due to Timer T3 Expiry

Data Source

RNC

Source Field

RAB.FailEstabPSNoQueuing.T3exp

Source Section

RAB Establishment Failures

RAB_FailEstabPSNoQueuing_T3exp_DCH_DCH

Number of PS RAB Establishment Failures due to Timer T3 Expiry mapped on DCH transport channels in UL and DL

Data Source

RNC

Source Field

RAB.FailEstabPSNoQueuing.T3exp.DCH_DCH

Source Section

RncFunction

RAB_FailEstabPSNoQueuing_ULIntfer

Number of PS RAB Establishment Failures due to UL interference (UL load)

Data Source

RNC

Source Field

RAB.FailEstabPSNoQueuing.ULIntfer

Source Section

RAB Establishment Failures

RAB_MeanCellDCH_Bgrd_DCH

Mean number of PS RABs in Cell_DCH with QoS class Background mapped on DCH

Data Source

RNC

Source Field

VS.RAB.MeanCellDCH.Bgrd.DCH

Source Section

Mean number of RABs

RAB_MeanCellDCH_Bgrd_DCH_HSDSCH

Mean number of PS RABs in Cell_DCH with QoS class 'Background' mapped on DCH / HS-DSCH

Data Source

RNC

Source Field

VS.RAB.MeanCellDCH.Bgrd.DCH_HSDSCH

Source Section

RncFunction

RAB_MeanCellDCH_CSD

Mean Number of Active RABs for Service Type CSD

Data Source

RNC

Source Field

VS.RAB.MeanCellDCH.CSD

Source Section

RncFunction

RAB_MeanCellDCH_CSV

Mean number of Active RABs for Service Type CSV

Data Source

RNC

Source Field

VS.RAB.MeanCellDCH.CSV

Source Section

RncFunction

RAB_MeanCellDCH_Intact_DCH

Mean number of PS RABs in Cell_DCH with QoS class Interactive mapped on DCH

Data Source

RNC

Source Field

VS.RAB.MeanCellDCH.Intact.DCH

Source Section

Mean number of RABs

RAB_MeanCellDCH_Intact_DCH_HSDSCH

Mean number of PS RABs in Cell_DCH with QoS class 'Interactive' mapped on DCH / HS-DSCH

Data Source

RNC

Source Field

VS.RAB.MeanCellDCH.Intact.DCH_HSDSCH

Source Section

RncFunction

RAB_MeanCellDCH_OneIBOneS_DCH_HSDSCH

This measurement provides the mean number of connections with the UE in Cell_DCH with one I/B RAB and one Streaming RAB mapped to HSDPA/DCH.

Data Source

RNC

Source Field

VS.RAB.MeanCellDCH.OneIBOneS.DCH_HSDSCH

Source Section

RAB Mean Cell DCH

RAB_MeanCellDCH_PS0DLUL

Mean number of RABs in Cell_DCH for Service Type PS 0/0 kbps DL/UL

Data Source

RNC

Source Field

VS.RAB.MeanCellDCH.PS0DLUL

Source Section

RncFunction

RAB_MeanCellDCH_PS128DL

Mean number of RABs in Cell_DCH for Service Type PS 128 kbps DL

Data Source

RNC

Source Field

VS.RAB.MeanCellDCH.PS128DL

Source Section

Mean number of RABs

RAB_MeanCellDCH_PS128UL

Mean number of RABs in Cell_DCH for Service Type PS 128 kbps UL

Data Source

RNC

Source Field

VS.RAB.MeanCellDCH.PS128UL

Source Section

Mean number of RABs

RAB_MeanCellDCH_PS16DL

Mean number of RABs in Cell_DCH for Service Type PS 16 kbps DL

Data Source

RNC

Source Field

VS.RAB.MeanCellDCH.PS16DL

Source Section

Mean number of RABs

RAB_MeanCellDCH_PS16UL

Mean number of RABs in Cell_DCH for Service Type PS 16 kbps UL

Data Source

RNC

Source Field

VS.RAB.MeanCellDCH.PS16UL

Source Section

Mean number of RABs

RAB_MeanCellDCH_PS32DL

Mean number of RABs in Cell_DCH for Service Type PS 32 kbps DL

Data Source

RNC

Source Field

VS.RAB.MeanCellDCH.PS32DL

Source Section

Mean number of RABs

RAB_MeanCellDCH_PS32UL

Mean number of RABs in Cell_DCH for Service Type PS 32 kbps UL

Data Source

RNC

Source Field

VS.RAB.MeanCellDCH.PS32UL

Source Section

Mean number of RABs

RAB_MeanCellDCH_PS384DL

Mean number of RABs in Cell_DCH for Service Type PS 384 kbps DL

Data Source

RNC

Source Field

VS.RAB.MeanCellDCH.PS384DL

Source Section

Mean number of RABs

RAB_MeanCellDCH_PS384UL

Mean number of RABs in Cell_DCH for Service Type PS 384 kbps UL

Data Source

RNC

Source Field

VS.RAB.MeanCellDCH.PS384UL

Source Section

Mean number of RABs

RAB_MeanCellDCH_PS64DL

Mean number of RABs in Cell_DCH for Service Type PS 64 kbps DL

Data Source

RNC

Source Field

VS.RAB.MeanCellDCH.PS64DL

Source Section

Mean number of RABs

RAB_MeanCellDCH_PS64UL

Mean number of RABs in Cell_DCH for Service Type PS 64 kbps UL

Data Source

RNC

Source Field

VS.RAB.MeanCellDCH.PS64UL

Source Section

Mean number of RABs

RAB_MeanCellDCH_PS8DL

Mean number of RABs in Cell_DCH for Service Type PS 8 kbps DL

Data Source

RNC

Source Field

VS.RAB.MeanCellDCH.PS8DL

Source Section

Mean number of RABs

RAB_MeanCellDCH_PS8UL

Mean number of RABs in Cell_DCH for Service Type PS 8 kbps UL

Data Source

RNC

Source Field

VS.RAB.MeanCellDCH.PS8UL

Source Section

Mean number of RABs

RAB_MeanCellDCH_Strm_DCH

Mean number of PS RABs in Cell_DCH with QoS Class Streaming mapped on DCH

Data Source

RNC

Source Field

VS.RAB.MeanCellDCH.Strm.DCH

Source Section

Mean number of RABs

RAB_MeanCellDCH_ThreeIB_DCH_DCH

This measurement provides the mean number of connections with the UE in Cell_DCH with three I/B RABs mapped to DCH/DCH.

Data Source

RNC

Source Field

VS.RAB.MeanCellDCH.ThreeIB.DCH_DCH

Source Section

RAB Mean Cell DCH

RAB_MeanCellDCH_ThreeIB_DCH_HSDSCH

This measurement provides the mean number of connections with the UE in Cell_DCH with three I/B RABs mapped to HSDPA/DCH.

Data Source

RNC

Source Field

VS.RAB.MeanCellDCH.ThreeIB.DCH_HSDSCH

Source Section

RAB Mean Cell DCH

RAB_MeanCellDCH_TwoIB_DCH_DCH

This measurement provides the mean number of connections with the UE in Cell_DCH with two I/B RABs mapped to DCH/DCH.

Data Source

RNC

Source Field

VS.RAB.MeanCellDCH.TwoIB.DCH_DCH

Source Section

RAB Mean Cell DCH

RAB_MeanCellDCH_TwoIB_DCH_HSDSCH

This measurement provides the mean number of connections with the UE in Cell_DCH with two I/B RABs mapped to HSDPA/DCH.

Data Source

RNC

Source Field

VS.RAB.MeanCellDCH.TwoIB.DCH_HSDSCH

Source Section

RAB Mean Cell DCH

RAB_MeanCellDCH_TwoIBOneS_DCH_DCH

This measurement provides the mean number of connections with the UE in Cell_DCH with two I/B RABs mapped to DCH/DCH.

Data Source

RNC

Source Field

VS.RAB.MeanCellDCH.TwoIBOneS.DCH_DCH

Source Section

RAB Mean Cell DCH

RAB_MeanCellDCH_TwoIBOneS_DCH_HSDSCH

This measurement provides the mean number of connections with the UE in Cell_DCH with two I/B RABs and one Streaming RAB mapped to HSDPA/DCH.

Data Source

RNC

Source Field

VS.RAB.MeanCellDCH.TwoIBOneS.DCH_HSDSCH

Source Section

RAB Mean Cell DCH

RAB_MeanCellDCH_ULDCH336_DLHSDSCH656

This measurement provides the mean number of PS RABs with UE being in Cell_DCH mapped on DCH / HS-DSCH transport channels with an RLC PDU size of 336 for UL and 656 bit for DL.

Data Source

RNC

Source Field

VS.RAB.MeanCellDCH.ULDCH336_DLHSDSCH656

Source Section

RAB Mean Cell DCH

RAB_NegotAllowed_PS_Strm

Number of Allowed RAB Negotiations for PS data with QoS class 'Streaming'

Data Source

RNC

Source Field

VS.RAB.NegotAllowed.PS.Strm

Source Section

RncFunction

RAB_NegotAppl_PS_Int_Bgrd_RelocResAlloc

Number of Applied RAB Negotiations for PS data with QoS class 'Interactive/Background' - Relocation Resource Allocation Procedure

Data Source

RNC

Source Field

VS.RAB.NegotAppl.PS.Intact_Bgrd.RelocResAlloc

Source Section

RncFunction

RAB_NegotAppl_PS_Intact_Bgrd_RABAssign

Number of Applied RAB Negotiations for PS data with QoS class 'Interactive/Background' - RAB Assignment Procedure

Data Source

RNC

Source Field

VS.RAB.NegotAppl.PS.Intact_Bgrd.RABAssign

Source Section

RncFunction

RAB_NegotAppl_PS_Strm

Number of Applied RAB Negotiations for PS data with QoS class 'Streaming'

Data Source

RNC

Source Field

VS.RAB.NegotAppl.PS.Strm

Source Section

RncFunction

RAB_Rel_Drop_sum

Total Number of Dropped RABs

Data Source

RNC

Source Field

RAB.Rel.Drop.sum

Source Section

Number of Dropped RABs

RAB_RelCS_Data_CauseRLF

Succeeded by:RAB_Drop_CSD_CauseULRLF. Number of Dropped RABs due to Radio Link Failure for CS Data

Data Source

RNC

Source Field

RAB.RelCS.Data.CauseRLF

Source Section

Number of Dropped RABs

RAB_RelCS_Voice_CauseRLF

Succeeded by:RAB_Drop_CSV_CauseULRLF. Number of Dropped RABs due to Radio Link Failure for CSV

Data Source

RNC

Source Field

RAB.RelCS.Voice.CauseRLF

Source Section

Number of Dropped RABs

RAB_RelPS_CauseCong

Number of Dropped RABs due to Congestion

Data Source

RNC

Source Field

RAB.RelPS.CauseCong

Source Section

Number of Dropped RABs

RAB_RelPS_DCH_CauseRLF

Succeeded by:RAB_Drop_PS_DCH_CauseULRLF. Number of Dropped PS RABs mapped to a DCH caused by RLF

Data Source

RNC

Source Field

RAB.RelPS.DCH.CauseRLF

Source Section

Number of Dropped RABs

RAB_SuccEstabCSNoQueuing_CSD

Number of Successful RAB Establishments for CSD with no queuing process

Data Source

RNC

Source Field

RAB.SuccEstabCSNoQueuing.CSD

Source Section

Successful RAB Establishments

RAB_SuccEstabCSNoQueuing_CSV

Number of Successful RAB Establishments for CSV with no queuing process

Data Source

RNC

Source Field

RAB.SuccEstabCSNoQueuing.CSV

Source Section

Successful RAB Establishments

RAB_SuccEstabCSV_475CodecSelect

Successful RAB Assignments with 4.75 Codec Selected

Data Source

RNC

Source Field

VS.RAB.SuccEstabCSV.475CodecSelect

Source Section

Speech Codecs

RAB_SuccEstabCSV_59CodecSelect

Successful RAB Assignments with 5.9 Codec Selected

Data Source

RNC

Source Field

VS.RAB.SuccEstabCSV.59CodecSelect

Source Section

Speech Codecs

RAB_SuccEstabCSV_795CodecSelect

Successful RAB Assignments with 7.95 Codec Selected

Data Source

RNC

Source Field

VS.RAB.SuccEstabCSV.795CodecSelect

Source Section

Speech Codecs

RAB_SuccEstabCSV_MultiCodecSup

Successful RAB Assignments with multiple Codecs Supported

Data Source

RNC

Source Field

VS.RAB.SuccEstabCSV.MultiCodecSup

Source Section

Speech Codecs

RAB_SuccEstabPS_Multiple

Number of Successful Establishments for Multiple I/B PS RABs

Data Source

RNC

Source Field

VS.RAB.SuccEstabPS.Multiple

Source Section

Successful RAB Establishments

RAB_SuccEstabPSNoQueuing_Bgrd

Number of Successful RAB Establishments for PS with QoS class 'Background'

Data Source

RNC

Source Field

RAB.SuccEstabPSNoQueuing.Bgrd

Source Section

RncFunction

RAB_SuccEstabPSNoQueuing_DCH_DCH

Number of Successful RAB Establishments for PS data mapped on DCH transport channels in UL and DL

Data Source

RNC

Source Field

RAB.SuccEstabPSNoQueuing.DCH_DCH

Source Section

RncFunction

RAB_SuccEstabPSNoQueuing_DCH_HSDSCH

Number of Successful RAB Establishments for PS data mapped on DCH/HS-DSCH transport channels

Data Source

RNC

Source Field

RAB.SuccEstabPSNoQueuing.DCH_HSDSCH

Source Section

RncFunction

RAB_SuccEstabPSNoQueuing_Intact

Number of Successful RAB Establishments for PS with QoS class 'Interactive'

Data Source

RNC

Source Field

RAB.SuccEstabPSNoQueuing.Intact

Source Section

RncFunction

RAB_SuccEstabPSNoQueuing_PS

Number of Successful RAB Establishments for PS with no queuing process

Data Source

RNC

Source Field

RAB.SuccEstabPSNoQueuing.PS

Source Section

Successful RAB Establishments

RAB_SuccEstabPSNoQueuing_Strm

Number of Successful RAB Establishments for PS with QoS class 'Streaming'

Data Source

RNC

Source Field

RAB.SuccEstabPSNoQueuing.Strm

Source Section

RncFunction

RABAttEstabCSNeighbRncConv64

CS RAB Establishment Attempts per RAB Id. This counter does not take into account RAB establishment attempts for incoming relocations. (NeighbRnc.Conv64)

Data Source

RNC C-Node

Source Field

RAB.AttEstab.CS.NeighbRnc.Conv64

Source Section

NeighbouringRnc

RABAttEstabCSNeighbRncSpeechConv

CS RAB Establishment Attempts per RAB Id. This counter does not take into account RAB establishment attempts for incoming relocations. (NeighbRnc.SpeechConv)

Data Source

RNC C-Node

Source Field

RAB.AttEstab.CS.NeighbRnc.SpeechConv

Source Section

NeighbouringRnc

RABAttEstabCSNeighbRncStrm

CS RAB Establishment Attempts per RAB Id. This counter does not take into account RAB establishment attempts for incoming relocations. (NeighbRnc.Strm)

Data Source

RNC C-Node

Source Field

RAB.AttEstab.CS.NeighbRnc.Strm

Source Section

NeighbouringRnc

RABAttEstabCSVECNeighbRnc

This PM counts the number of RAB Assignment Requests for Emergency Calls. This PM is only applicable for Emergency Calls. (NeighbRnc)

Data Source

RNC C-Node

Source Field

RAB.AttEstabCSV.EC.NeighbRnc

Source Section

NeighbouringRnc

RABAttEstabCSVWPSNeighbRnc

RAB Assignment Requests for Wireless Priority Service. Number of RAB Assignment Requests for Wireless Priority Service (WPS) calls. This measurement is pegged only if WPS handling is enabled in the RNC. Only applicable in the context of WPS calls. (NeighbRnc)

Data Source

RNC C-Node

Source Field

RAB.AttEstabCSV.WPS.NeighbRnc

Source Section

NeighbouringRnc

RABAttEstabPSMultipleNeighbRnc

Number of attempts to setup a PS "interactive" or "background" RAB on top of an existing PS "interactive" or "background" RAB for the same UE. (NeighbRnc)

Data Source

RNC C-Node

Source Field

VS.RAB.AttEstabPS.Multiple.NeighbRnc

Source Section

NeighbouringRnc

RABAttEstabPSNeighbRncHighRateBgrd

PS RAB Establishment Attempts per PS RAB Id. This counter does not take into account RAB establishment attempts for incoming relocations. (HighRateBgrd)

Data Source

RNC C-Node

Source Field

RAB.AttEstab.PS.NeighbRnc.HighRateBgrd

Source Section

NeighbouringRnc

RABAttEstabPSNeighbRncHighRateIntact

PS RAB Establishment Attempts per PS RAB Id. This counter does not take into account RAB establishment attempts for incoming relocations. (HighRateIntact)

Data Source

RNC C-Node

Source Field

RAB.AttEstab.PS.NeighbRnc.HighRateIntact

Source Section

NeighbouringRnc

RABAttEstabPSNeighbRncHighRateStrm

PS RAB Establishment Attempts per PS RAB Id. This counter does not take into account RAB establishment attempts for incoming relocations. (HighRateStrm)

Data Source

RNC C-Node

Source Field

RAB.AttEstab.PS.NeighbRnc.HighRateStrm

Source Section

NeighbouringRnc

RABAttEstabPSNeighbRncLowRateBgrd

PS RAB Establishment Attempts per PS RAB Id. This counter does not take into account RAB establishment attempts for incoming relocations. (LowRateBgrd)

Data Source

RNC C-Node

Source Field

RAB.AttEstab.PS.NeighbRnc.LowRateBgrd

Source Section

NeighbouringRnc

RABAttEstabPSNeighbRncLowRateIntact

PS RAB Establishment Attempts per PS RAB Id. This counter does not take into account RAB establishment attempts for incoming relocations. (LowRateIntact)

Data Source

RNC C-Node

Source Field

RAB.AttEstab.PS.NeighbRnc.LowRateIntact

Source Section

NeighbouringRnc

RABAttEstabPSNeighbRncLowRateStrm

PS RAB Establishment Attempts per PS RAB Id. This counter does not take into account RAB establishment attempts for incoming relocations. (LowRateStrm)

Data Source

RNC C-Node

Source Field

RAB.AttEstab.PS.NeighbRnc.LowRateStrm

Source Section

NeighbouringRnc

RABAttEstabPSSumNeighbRnc

PS RAB Establishment Attempts per PS RAB Id (NeighbRnc)

Data Source

RNC C-Node

Source Field

RAB.AttEstab.PS.Sum.NeighbRnc

Source Section

NeighbouringRnc

RABAttEstabPSTrChnNeighbRncDCH_DCH

RAB Establishment Attempts for PS per RAB Id. This counter does not take into account RAB establishment attempts for incoming relocations. (DCH_DCH)

Data Source

RNC C-Node

Source Field

RAB.AttEstab.PS.TrChn.NeighbRnc.DCH_DCH

Source Section

NeighbouringRnc

RABAttEstabPSTrChnNeighbRncDCH_HSDSCH

RAB Establishment Attempts for PS per RAB Id. This counter does not take into account RAB establishment attempts for incoming relocations. (DCH_HSDSCH)

Data Source

RNC C-Node

Source Field

RAB.AttEstab.PS.TrChn.NeighbRnc.DCH_HSDSCH

Source Section

NeighbouringRnc

RABDropCNInitCSVNeighbRnc

Dropped CN (core network) initiated CS Voice RAB Connections. A CSV RAB connection is considered to be "dropped" (abnormally released) if the RAB connection has already been successfully established and is abnormally released due to MSC initiated failure. UTRAN initiated drops are excluded (NeighbRnc)

Data Source

RNC C-Node

Source Field

VS.RAB.Drop.CN.Init.CSV.NeighbRnc

Source Section

NeighbouringRnc

RABDropCNInitPSCellDCHNeighbRncDCH_DCH

CN (core network) initiated dropped PS RAB connections for Ues in Cell_DCH state per transport channel type supported over Iur. A PS RAB connection is considered to be "dropped" (abnormally released) if the RAB connection has already been successfully established and is abnormally released due to any kind of CN failure (including OAM intervention). UTRAN initiated drops are excluded. (DCH_DCH)

Data Source

RNC C-Node

Source Field

VS.RAB.Drop.CN.Init.PS.CellDCH.NeighbRnc.DCH_DCH

Source Section

NeighbouringRnc

RABDropCNInitPSCellDCHNeighbRncDCH_HSDSCH

CN (core network) initiated dropped PS RAB connections for Ues in Cell_DCH state per transport channel type supported over Iur. A PS RAB connection is considered to be "dropped" (abnormally released) if the RAB connection has already been successfully established and is abnormally released due to any kind of CN failure (including OAM intervention). UTRAN initiated drops are excluded. (DCH_HSDSCH)

Data Source

RNC C-Node

Source Field

VS.RAB.Drop.CN.Init.PS.CellDCH.NeighbRnc.DCH_HSDSCH

Source Section

NeighbouringRnc

RABDropCSCauseNeighbRncDL_RLF

Dropped CS RAB connection per failure cause (DL_RLF)

Data Source

RNC C-Node

Source Field

VS.RAB.Drop.CS.Cause.NeighbRnc.DL_RLF

Source Section

NeighbouringRnc

RABDropCSCauseNeighbRncUL_RLF

Dropped CS RAB connection per failure cause (UL_RLF)

Data Source

RNC C-Node

Source Field

VS.RAB.Drop.CS.Cause.NeighbRnc.UL_RLF

Source Section

NeighbouringRnc

RABDropCSCodecChangeNeighbRnc

Dropped CS RAB connections during AMR codec change due to unsuccessful termination of the Iu Rate Control procedure (NeighbRnc)

Data Source

RNC C-Node

Source Field

VS.RAB.Drop.CS.CodecChange.NeighbRnc

Source Section

NeighbouringRnc

RABDropCSInterFreqHHONeighbRnc

Dropped CS RAB connections due to unrecoverable failures during inter-frequency hard handover. (NeighbRnc)

Data Source

RNC C-Node

Source Field

VS.RAB.Drop.CS.InterFreqHHO.NeighbRnc

Source Section

NeighbouringRnc

RABDropCSRelocUEInvolNeighbRnc

Dropped CS RAB connection due to SRNS relocation. (NeighbRnc)

Data Source

RNC C-Node

Source Field

VS.RAB.Drop.CS.RelocUEInvol.NeighbRnc

Source Section

NeighbouringRnc

RABDropCSVNeighbRnc

Dropped UTRAN Initiated CS Voice RAB Connections (NeighbRnc)

Data Source

RNC C-Node

Source Field

VS.RAB.Drop.CSV.NeighbRnc

Source Section

NeighbouringRnc

RABDropCSVUESigConnRelNeighbRnc

Dropped CS Voice RAB Connections due to UE Initiated Signalling Connection Release (NeighbRnc)

Data Source

RNC C-Node

Source Field

VS.RAB.Drop.CSV.UESigConnRel.NeighbRnc

Source Section

NeighbouringRnc

RABDropPSCauseNeighbRncDL_RLCErrRate

Dropped PS RAB connection per failure cause. (DL_RLCErrRate)

Data Source

RNC C-Node

Source Field

VS.RAB.Drop.PS.Cause.NeighbRnc.DL_RLCErrRate

Source Section

NeighbouringRnc

RABDropPSCauseNeighbRncDL_RLF

Dropped PS RAB connection per failure cause. (DL_RLF)

Data Source

RNC C-Node

Source Field

VS.RAB.Drop.PS.Cause.NeighbRnc.DL_RLF

Source Section

NeighbouringRnc

RABDropPSCauseNeighbRncUL_RLCErrRate

Dropped PS RAB connection per failure cause. (UL_RLCErrRate)

Data Source

RNC C-Node

Source Field

VS.RAB.Drop.PS.Cause.NeighbRnc.UL_RLCErrRate

Source Section

NeighbouringRnc

RABDropPSCauseNeighbRncUL_RLF

Dropped PS RAB connection per failure cause. (UL_RLF)

Data Source

RNC C-Node

Source Field

VS.RAB.Drop.PS.Cause.NeighbRnc.UL_RLF

Source Section

NeighbouringRnc

RABDropPSCellDCHNeighbRncDCH_DCH

Dropped UTRAN Initiated PS RAB Connections with UE in Cell_DCH per transport channel format. This counter should only be pegged for drops that occurred after the RAB assignment procedure was successful (drops occurring during the RAB assignment procedure shall not be taken into account). (DCH_DCH)

Data Source

RNC C-Node

Source Field

VS.RAB.Drop.PS.CellDCH.NeighbRnc.DCH_DCH

Source Section

NeighbouringRnc

RABDropPSCellDCHNeighbRncDCH_HSDSCH

Dropped UTRAN Initiated PS RAB Connections with UE in Cell_DCH per transport channel format. This counter should only be pegged for drops that occurred after the RAB assignment procedure was successful (drops occurring during the RAB assignment procedure shall not be taken into account). (DCH_HSDSCH)

Data Source

RNC C-Node

Source Field

VS.RAB.Drop.PS.CellDCH.NeighbRnc.DCH_HSDSCH

Source Section

NeighbouringRnc

RABDropPSCellDCHRelProcNeighbRncIuRelReq

Dropped UTRAN Initiated PS RAB Connections with UE in Cell_DCH (IuRelReq)

Data Source

RNC C-Node

Source Field

VS.RAB.Drop.PS.CellDCH.RelProc.NeighbRnc.IuRelReq

Source Section

NeighbouringRnc

RABDropPSCellDCHRelProcNeighbRncRABRelReq

Dropped UTRAN Initiated PS RAB Connections with UE in Cell_DCH (RABRelReq)

Data Source

RNC C-Node

Source Field

VS.RAB.Drop.PS.CellDCH.RelProc.NeighbRnc.RABRelReq

Source Section

NeighbouringRnc

RABDropPSCellDCHRelProcNeighbRncReset

Dropped UTRAN Initiated PS RAB Connections with UE in Cell_DCH (Reset)

Data Source

RNC C-Node

Source Field

VS.RAB.Drop.PS.CellDCH.RelProc.NeighbRnc.Reset

Source Section

NeighbouringRnc

RABDropPSCsIratHoNeighbRnc

Dropped PS RAB connections due to successful CS IRAT HO. (NeighbRnc)

Data Source

RNC C-Node

Source Field

VS.RAB.Drop.PS.CsIratHo.NeighbRnc

Source Section

NeighbouringRnc

RABDropPSInterFreqHHONeighbRnc

Dropped PS RAB connections due to unrecoverable failures at inter-frequency hard handover. (NeighbRnc)

Data Source

RNC C-Node

Source Field

VS.RAB.Drop.PS.InterFreqHHO.NeighbRnc

Source Section

NeighbouringRnc

RABDropPSRelocUEInvolNeighbRnc

Dropped RAB connection caused by SRNS relocation for the PS domain. (NeighbRnc)

Data Source

RNC C-Node

Source Field

VS.RAB.Drop.PS.Reloc.UEInvol.NeighbRnc

Source Section

NeighbouringRnc

RABDropPSUESigConnRelNeighbRnc

Dropped PS RAB Connections due to UE Initiated Signalling Connection Release (NeighbRnc)

Data Source

RNC C-Node

Source Field

VS.RAB.Drop.PS.UESigConnRel.NeighbRnc

Source Section

NeighbouringRnc

RABEstabCancelCSCallRelNeighbRnc

Cancelled CS RAB establishment procedures due to "normal call release". (NeighbRnc)

Data Source

RNC C-Node

Source Field

VS.RAB.EstabCancel.CS.CallRel.NeighbRnc

Source Section

NeighbouringRnc

RABEstabCancelPSCallRelNeighbRnc

Cancelled PS RAB establishment procedures due to "normal call release". (NeighbRnc)

Data Source

RNC C-Node

Source Field

VS.RAB.EstabCancel.PS.CallRel.NeighbRnc

Source Section

NeighbouringRnc

RABFailEstab_CodeStarv

Number of RAB Establishment Failures due to Code Starvation

Data Source

RNC

Source Field

RABFailEstab.CodeStarv

Source Section

RAB Establishment Failures

RABFailEstab_Load

Number of RAB Establishment Failures due to Load

Data Source

RNC

Source Field

RABFailEstab.Load

Source Section

RAB Establishment Failures

RABFailEstab_RBSetupFail

Number of RAB Establishment Failures due to RB Setup Failure

Data Source

RNC

Source Field

RABFailEstab.RBSetupFail

Source Section

RAB Establishment Failures

RABFailEstab_T3

Number of RAB Establishment Failures due to T3 expiry

Data Source

RNC

Source Field

RABFailEstab.T3

Source Section

RAB Establishment Failures

RABFailEstabCSNeighbRncRBSetupExp

RAB Establishment Failures per failure cause for the CS domain. (RBSetupExp)

Data Source

RNC C-Node

Source Field

RAB.FailEstab.CS.NeighbRnc.RBSetupExp

Source Section

NeighbouringRnc

RABFailEstabCSNeighbRncRBSetupFail

RAB Establishment Failures per failure cause for the CS domain. (RBSetupFail)

Data Source

RNC C-Node

Source Field

RAB.FailEstab.CS.NeighbRnc.RBSetupFail

Source Section

NeighbouringRnc

RABFailEstabCSNeighbRncRLFailNodeBErr

RAB Establishment Failures per failure cause for the CS domain. (RLFailNodeBErr)

Data Source

RNC C-Node

Source Field

RAB.FailEstab.CS.NeighbRnc.RLFailNodeBErr

Source Section

NeighbouringRnc

RABFailEstabCSNeighbRncRLFailNodeBResource

RAB Establishment Failures per failure cause for the CS domain. (RLFailNodeBResource)

Data Source

RNC C-Node

Source Field

RAB.FailEstab.CS.NeighbRnc.RLFailNodeBResource

Source Section

NeighbouringRnc

RABFailEstabCSNeighbRncRLFailOther

RAB Establishment Failures per failure cause for the CS domain. (RLFailOther)

Data Source

RNC C-Node

Source Field

RAB.FailEstab.CS.NeighbRnc.RLFailOther

Source Section

NeighbouringRnc

RABFailEstabCSNeighbRncRLReconfigExp

RAB Establishment Failures per failure cause for the CS domain. (RLReconfigExp)

Data Source

RNC C-Node

Source Field

RAB.FailEstab.CS.NeighbRnc.RLReconfigExp

Source Section

NeighbouringRnc

RABFailEstabPSNeighbRncRBSetupExp

RAB Establishment Failures per failure cause for the PS domain. (RBSetupExp)

Data Source

RNC C-Node

Source Field

RAB.FailEstab.PS.NeighbRnc.RBSetupExp

Source Section

NeighbouringRnc

RABFailEstabPSNeighbRncRBSetupFail

RAB Establishment Failures per failure cause for the PS domain. (RBSetupFail)

Data Source

RNC C-Node

Source Field

RAB.FailEstab.PS.NeighbRnc.RBSetupFail

Source Section

NeighbouringRnc

RABFailEstabPSNeighbRncRLFailNodeBErr

RAB Establishment Failures per failure cause for the PS domain. (RLFailNodeBErr)

Data Source

RNC C-Node

Source Field

RAB.FailEstab.PS.NeighbRnc.RLFailNodeBErr

Source Section

NeighbouringRnc

RABFailEstabPSNeighbRncRLFailNodeBResource

RAB Establishment Failures per failure cause for the PS domain. (RLFailNodeBResource)

Data Source

RNC C-Node

Source Field

RAB.FailEstab.PS.NeighbRnc.RLFailNodeBResource

Source Section

NeighbouringRnc

RABFailEstabPSNeighbRncRLFailOther

RAB Establishment Failures per failure cause for the PS domain. (RLFailOther)

Data Source

RNC C-Node

Source Field

RAB.FailEstab.PS.NeighbRnc.RLFailOther

Source Section

NeighbouringRnc

RABFailEstabPSNeighbRncRLReconfigExp

RAB Establishment Failures per failure cause for the PS domain. (RLReconfigExp)

Data Source

RNC C-Node

Source Field

RAB.FailEstab.PS.NeighbRnc.RLReconfigExp

Source Section

NeighbouringRnc

RABFailEstabPSServCombNeighbRnc

Number of PS RABs failed to be established due to lack of service combination support. (NeighbRnc)

Data Source

RNC C-Node

Source Field

RAB.FailEstabPS.ServComb.NeighbRnc

Source Section

NeighbouringRnc

RABFailEstCSNoQue_RLReconfFail_NodeBErr

CS RAB Establishment Failures due to RL Reconfiguration Failure caused by NodeB Errors

Data Source

RNC

Source Field

RAB.FailEstabCSNoQueuing.RLReconfFail.NodeBErr

Source Section

RncFunction

RABFailEstPSNoQue_RLReconfFail_NodeBErr

PS RAB Establishment Failures due to RL Reconfiguration Failure caused by NodeB Errors

Data Source

RNC

Source Field

RAB.FailEstabPSNoQueuing.RLReconfFail.NodeBErr

Source Section

RncFunction

RABFailEstPSNoQue_T3exp_DCH_HSDSCH

Number of PS RAB Establishment Failures due to Timer T3 Expiry mapped on DCH/HSDCH transport channels in UL and DL

Data Source

RNC

Source Field

RAB.FailEstabPSNoQueuing.T3exp.DCH_HSDSCH

Source Section

RncFunction

RABMeanCellDCHPSMultipleNeighbRnc1IB1S_DCH_DCHAvg

Provides the mean number of connections with the UE in Cell_DCH for a specific multi-RAB combination. (Avg)

Data Source

RNC C-Node

Source Field

VS.RAB.MeanCellDCH.PS.Multiple.NeighbRnc.1IB1S_DCH_DCH.Avg

Source Section

NeighbouringRnc

RABMeanCellDCHPSMultipleNeighbRnc1IB1S_DCH_DCHCum

Provides the mean number of connections with the UE in Cell_DCH for a specific multi-RAB combination. (Cum)

Data Source

RNC C-Node

Source Field

VS.RAB.MeanCellDCH.PS.Multiple.NeighbRnc.1IB1S_DCH_DCH.Cum

Source Section

NeighbouringRnc

RABMeanCellDCHPSMultipleNeighbRnc1IB1S_DCH_DCHMax

Provides the mean number of connections with the UE in Cell_DCH for a specific multi-RAB combination. (Max)

Data Source

RNC C-Node

Source Field

VS.RAB.MeanCellDCH.PS.Multiple.NeighbRnc.1IB1S_DCH_DCH.Max

Source Section

NeighbouringRnc

RABMeanCellDCHPSMultipleNeighbRnc1IB1S_DCH_DCHMin

Provides the mean number of connections with the UE in Cell_DCH for a specific multi-RAB combination. (Min)

Data Source

RNC C-Node

Source Field

VS.RAB.MeanCellDCH.PS.Multiple.NeighbRnc.1IB1S_DCH_DCH.Min

Source Section

NeighbouringRnc

RABMeanCellDCHPSMultipleNeighbRnc1IB1S_DCH_DCHNbEvt

Provides the mean number of connections with the UE in Cell_DCH for a specific multi-RAB combination. (NbEvt)

Data Source

RNC C-Node

Source Field

VS.RAB.MeanCellDCH.PS.Multiple.NeighbRnc.1IB1S_DCH_DCH.NbEvt

Source Section

NeighbouringRnc

RABMeanCellDCHPSMultipleNeighbRnc1IB1S_DCH_HSDSCHAvg

Provides the mean number of connections with the UE in Cell_DCH for a specific multi-RAB combination. (Avg)

Data Source

RNC C-Node

Source Field

VS.RAB.MeanCellDCH.PS.Multiple.NeighbRnc.1IB1S_DCH_HSDSCH.Avg

Source Section

NeighbouringRnc

RABMeanCellDCHPSMultipleNeighbRnc1IB1S_DCH_HSDSCHCum

Provides the mean number of connections with the UE in Cell_DCH for a specific multi-RAB combination. (Cum)

Data Source

RNC C-Node

Source Field

VS.RAB.MeanCellDCH.PS.Multiple.NeighbRnc.1IB1S_DCH_HSDSCH.Cum

Source Section

NeighbouringRnc

RABMeanCellDCHPSMultipleNeighbRnc1IB1S_DCH_HSDSCHMax

Provides the mean number of connections with the UE in Cell_DCH for a specific multi-RAB combination. (Max)

Data Source

RNC C-Node

Source Field

VS.RAB.MeanCellDCH.PS.Multiple.NeighbRnc.1IB1S_DCH_HSDSCH.Max

Source Section

NeighbouringRnc

RABMeanCellDCHPSMultipleNeighbRnc1IB1S_DCH_HSDSCHMin

Provides the mean number of connections with the UE in Cell_DCH for a specific multi-RAB combination. (Min)

Data Source

RNC C-Node

Source Field

VS.RAB.MeanCellDCH.PS.Multiple.NeighbRnc.1IB1S_DCH_HSDSCH.Min

Source Section

NeighbouringRnc

RABMeanCellDCHPSMultipleNeighbRnc1IB1S_DCH_HSDSCHNbEvt

Provides the mean number of connections with the UE in Cell_DCH for a specific multi-RAB combination. (NbEvt)

Data Source

RNC C-Node

Source Field

VS.RAB.MeanCellDCH.PS.Multiple.NeighbRnc.1IB1S_DCH_HSDSCH.NbEvt

Source Section

NeighbouringRnc

RABMeanCellDCHPSMultipleNeighbRnc2IB_DCH_DCHAvg

Provides the mean number of connections with the UE in Cell_DCH for a specific multi-RAB combination. (Avg)

Data Source

RNC C-Node

Source Field

VS.RAB.MeanCellDCH.PS.Multiple.NeighbRnc.2IB_DCH_DCH.Avg

Source Section

NeighbouringRnc

RABMeanCellDCHPSMultipleNeighbRnc2IB_DCH_DCHCum

Provides the mean number of connections with the UE in Cell_DCH for a specific multi-RAB combination. (Cum)

Data Source

RNC C-Node

Source Field

VS.RAB.MeanCellDCH.PS.Multiple.NeighbRnc.2IB_DCH_DCH.Cum

Source Section

NeighbouringRnc

RABMeanCellDCHPSMultipleNeighbRnc2IB_DCH_DCHMax

Provides the mean number of connections with the UE in Cell_DCH for a specific multi-RAB combination. (Max)

Data Source

RNC C-Node

Source Field

VS.RAB.MeanCellDCH.PS.Multiple.NeighbRnc.2IB_DCH_DCH.Max

Source Section

NeighbouringRnc

RABMeanCellDCHPSMultipleNeighbRnc2IB_DCH_DCHMin

Provides the mean number of connections with the UE in Cell_DCH for a specific multi-RAB combination. (Min)

Data Source

RNC C-Node

Source Field

VS.RAB.MeanCellDCH.PS.Multiple.NeighbRnc.2IB_DCH_DCH.Min

Source Section

NeighbouringRnc

RABMeanCellDCHPSMultipleNeighbRnc2IB_DCH_DCHNbEvt

Provides the mean number of connections with the UE in Cell_DCH for a specific multi-RAB combination. (NbEvt)

Data Source

RNC C-Node

Source Field

VS.RAB.MeanCellDCH.PS.Multiple.NeighbRnc.2IB_DCH_DCH.NbEvt

Source Section

NeighbouringRnc

RABMeanCellDCHPSMultipleNeighbRnc2IB_DCH_HSDSCHAvg

Provides the mean number of connections with the UE in Cell_DCH for a specific multi-RAB combination. (Avg)

Data Source

RNC C-Node

Source Field

VS.RAB.MeanCellDCH.PS.Multiple.NeighbRnc.2IB_DCH_HSDSCH.Avg

Source Section

NeighbouringRnc

RABMeanCellDCHPSMultipleNeighbRnc2IB_DCH_HSDSCHCum

Provides the mean number of connections with the UE in Cell_DCH for a specific multi-RAB combination. (Cum)

Data Source

RNC C-Node

Source Field

VS.RAB.MeanCellDCH.PS.Multiple.NeighbRnc.2IB_DCH_HSDSCH.Cum

Source Section

NeighbouringRnc

RABMeanCellDCHPSMultipleNeighbRnc2IB_DCH_HSDSCHMax

Provides the mean number of connections with the UE in Cell_DCH for a specific multi-RAB combination. (Max)

Data Source

RNC C-Node

Source Field

VS.RAB.MeanCellDCH.PS.Multiple.NeighbRnc.2IB_DCH_HSDSCH.Max

Source Section

NeighbouringRnc

RABMeanCellDCHPSMultipleNeighbRnc2IB_DCH_HSDSCHMin

Provides the mean number of connections with the UE in Cell_DCH for a specific multi-RAB combination. (Min)

Data Source

RNC C-Node

Source Field

VS.RAB.MeanCellDCH.PS.Multiple.NeighbRnc.2IB_DCH_HSDSCH.Min

Source Section

NeighbouringRnc

RABMeanCellDCHPSMultipleNeighbRnc2IB_DCH_HSDSCHNbEvt

Provides the mean number of connections with the UE in Cell_DCH for a specific multi-RAB combination. (NbEvt)

Data Source

RNC C-Node

Source Field

VS.RAB.MeanCellDCH.PS.Multiple.NeighbRnc.2IB_DCH_HSDSCH.NbEvt

Source Section

NeighbouringRnc

RABMeanCellDCHPSMultipleNeighbRnc2IB1S_DCH_DCHAvg

Provides the mean number of connections with the UE in Cell_DCH for a specific multi-RAB combination. (Avg)

Data Source

RNC C-Node

Source Field

VS.RAB.MeanCellDCH.PS.Multiple.NeighbRnc.2IB1S_DCH_DCH.Avg

Source Section

NeighbouringRnc

RABMeanCellDCHPSMultipleNeighbRnc2IB1S_DCH_DCHCum

Provides the mean number of connections with the UE in Cell_DCH for a specific multi-RAB combination. (Cum)

Data Source

RNC C-Node

Source Field

VS.RAB.MeanCellDCH.PS.Multiple.NeighbRnc.2IB1S_DCH_DCH.Cum

Source Section

NeighbouringRnc

RABMeanCellDCHPSMultipleNeighbRnc2IB1S_DCH_DCHMax

Provides the mean number of connections with the UE in Cell_DCH for a specific multi-RAB combination. (Max)

Data Source

RNC C-Node

Source Field

VS.RAB.MeanCellDCH.PS.Multiple.NeighbRnc.2IB1S_DCH_DCH.Max

Source Section

NeighbouringRnc

RABMeanCellDCHPSMultipleNeighbRnc2IB1S_DCH_DCHMin

Provides the mean number of connections with the UE in Cell_DCH for a specific multi-RAB combination. (Min)

Data Source

RNC C-Node

Source Field

VS.RAB.MeanCellDCH.PS.Multiple.NeighbRnc.2IB1S_DCH_DCH.Min

Source Section

NeighbouringRnc

RABMeanCellDCHPSMultipleNeighbRnc2IB1S_DCH_DCHNbEvt

Provides the mean number of connections with the UE in Cell_DCH for a specific multi-RAB combination. (NbEvt)

Data Source

RNC C-Node

Source Field

VS.RAB.MeanCellDCH.PS.Multiple.NeighbRnc.2IB1S_DCH_DCH.NbEvt

Source Section

NeighbouringRnc

RABMeanCellDCHPSMultipleNeighbRnc2IB1S_DCH_HSDSCHAvg

Provides the mean number of connections with the UE in Cell_DCH for a specific multi-RAB combination. (Avg)

Data Source

RNC C-Node

Source Field

VS.RAB.MeanCellDCH.PS.Multiple.NeighbRnc.2IB1S_DCH_HSDSCH.Avg

Source Section

NeighbouringRnc

RABMeanCellDCHPSMultipleNeighbRnc2IB1S_DCH_HSDSCHCum

Provides the mean number of connections with the UE in Cell_DCH for a specific multi-RAB combination. (Cum)

Data Source

RNC C-Node

Source Field

VS.RAB.MeanCellDCH.PS.Multiple.NeighbRnc.2IB1S_DCH_HSDSCH.Cum

Source Section

NeighbouringRnc

RABMeanCellDCHPSMultipleNeighbRnc2IB1S_DCH_HSDSCHMax

Provides the mean number of connections with the UE in Cell_DCH for a specific multi-RAB combination. (Max)

Data Source

RNC C-Node

Source Field

VS.RAB.MeanCellDCH.PS.Multiple.NeighbRnc.2IB1S_DCH_HSDSCH.Max

Source Section

NeighbouringRnc

RABMeanCellDCHPSMultipleNeighbRnc2IB1S_DCH_HSDSCHMin

Provides the mean number of connections with the UE in Cell_DCH for a specific multi-RAB combination. (Min)

Data Source

RNC C-Node

Source Field

VS.RAB.MeanCellDCH.PS.Multiple.NeighbRnc.2IB1S_DCH_HSDSCH.Min

Source Section

NeighbouringRnc

RABMeanCellDCHPSMultipleNeighbRnc2IB1S_DCH_HSDSCHNbEvt

Provides the mean number of connections with the UE in Cell_DCH for a specific multi-RAB combination. (NbEvt)

Data Source

RNC C-Node

Source Field

VS.RAB.MeanCellDCH.PS.Multiple.NeighbRnc.2IB1S_DCH_HSDSCH.NbEvt

Source Section

NeighbouringRnc

RABMeanCellDCHPSMultipleNeighbRnc3IB_DCH_DCHAvg

Provides the mean number of connections with the UE in Cell_DCH for a specific multi-RAB combination. (Avg)

Data Source

RNC C-Node

Source Field

VS.RAB.MeanCellDCH.PS.Multiple.NeighbRnc.3IB_DCH_DCH.Avg

Source Section

NeighbouringRnc

RABMeanCellDCHPSMultipleNeighbRnc3IB_DCH_DCHCum

Provides the mean number of connections with the UE in Cell_DCH for a specific multi-RAB combination. (Cum)

Data Source

RNC C-Node

Source Field

VS.RAB.MeanCellDCH.PS.Multiple.NeighbRnc.3IB_DCH_DCH.Cum

Source Section

NeighbouringRnc

RABMeanCellDCHPSMultipleNeighbRnc3IB_DCH_DCHMax

Provides the mean number of connections with the UE in Cell_DCH for a specific multi-RAB combination. (Max)

Data Source

RNC C-Node

Source Field

VS.RAB.MeanCellDCH.PS.Multiple.NeighbRnc.3IB_DCH_DCH.Max

Source Section

NeighbouringRnc

RABMeanCellDCHPSMultipleNeighbRnc3IB_DCH_DCHMin

Provides the mean number of connections with the UE in Cell_DCH for a specific multi-RAB combination. (Min)

Data Source

RNC C-Node

Source Field

VS.RAB.MeanCellDCH.PS.Multiple.NeighbRnc.3IB_DCH_DCH.Min

Source Section

NeighbouringRnc

RABMeanCellDCHPSMultipleNeighbRnc3IB_DCH_DCHNbEvt

Provides the mean number of connections with the UE in Cell_DCH for a specific multi-RAB combination. (NbEvt)

Data Source

RNC C-Node

Source Field

VS.RAB.MeanCellDCH.PS.Multiple.NeighbRnc.3IB_DCH_DCH.NbEvt

Source Section

NeighbouringRnc

RABMeanCellDCHPSMultipleNeighbRnc3IB_DCH_HSDSCHAvg

Provides the mean number of connections with the UE in Cell_DCH for a specific multi-RAB combination. (Avg)

Data Source

RNC C-Node

Source Field

VS.RAB.MeanCellDCH.PS.Multiple.NeighbRnc.3IB_DCH_HSDSCH.Avg

Source Section

NeighbouringRnc

RABMeanCellDCHPSMultipleNeighbRnc3IB_DCH_HSDSCHCum

Provides the mean number of connections with the UE in Cell_DCH for a specific multi-RAB combination. (Cum)

Data Source

RNC C-Node

Source Field

VS.RAB.MeanCellDCH.PS.Multiple.NeighbRnc.3IB_DCH_HSDSCH.Cum

Source Section

NeighbouringRnc

RABMeanCellDCHPSMultipleNeighbRnc3IB_DCH_HSDSCHMax

Provides the mean number of connections with the UE in Cell_DCH for a specific multi-RAB combination. (Max)

Data Source

RNC C-Node

Source Field

VS.RAB.MeanCellDCH.PS.Multiple.NeighbRnc.3IB_DCH_HSDSCH.Max

Source Section

NeighbouringRnc

RABMeanCellDCHPSMultipleNeighbRnc3IB_DCH_HSDSCHMin

Provides the mean number of connections with the UE in Cell_DCH for a specific multi-RAB combination. (Min)

Data Source

RNC C-Node

Source Field

VS.RAB.MeanCellDCH.PS.Multiple.NeighbRnc.3IB_DCH_HSDSCH.Min

Source Section

NeighbouringRnc

RABMeanCellDCHPSMultipleNeighbRnc3IB_DCH_HSDSCHNbEvt

Provides the mean number of connections with the UE in Cell_DCH for a specific multi-RAB combination. (NbEvt)

Data Source

RNC C-Node

Source Field

VS.RAB.MeanCellDCH.PS.Multiple.NeighbRnc.3IB_DCH_HSDSCH.NbEvt

Source Section

NeighbouringRnc

RABMeanCellDCHPSMultipleNeighbRncOther_Multi_RAB_ComboAvg

Provides the mean number of connections with the UE in Cell_DCH for a specific multi-RAB combination. (Avg)

Data Source

RNC C-Node

Source Field

VS.RAB.MeanCellDCH.PS.Multiple.NeighbRnc.Other_Multi_RAB_Combo.Avg

Source Section

NeighbouringRnc

RABMeanCellDCHPSMultipleNeighbRncOther_Multi_RAB_ComboCum

Provides the mean number of connections with the UE in Cell_DCH for a specific multi-RAB combination. (Cum)

Data Source

RNC C-Node

Source Field

VS.RAB.MeanCellDCH.PS.Multiple.NeighbRnc.Other_Multi_RAB_Combo.Cum

Source Section

NeighbouringRnc

RABMeanCellDCHPSMultipleNeighbRncOther_Multi_RAB_ComboMax

Provides the mean number of connections with the UE in Cell_DCH for a specific multi-RAB combination. (Max)

Data Source

RNC C-Node

Source Field

VS.RAB.MeanCellDCH.PS.Multiple.NeighbRnc.Other_Multi_RAB_Combo.Max

Source Section

NeighbouringRnc

RABMeanCellDCHPSMultipleNeighbRncOther_Multi_RAB_ComboMin

Provides the mean number of connections with the UE in Cell_DCH for a specific multi-RAB combination. (Min)

Data Source

RNC C-Node

Source Field

VS.RAB.MeanCellDCH.PS.Multiple.NeighbRnc.Other_Multi_RAB_Combo.Min

Source Section

NeighbouringRnc

RABMeanCellDCHPSMultipleNeighbRncOther_Multi_RAB_ComboNbEvt

Provides the mean number of connections with the UE in Cell_DCH for a specific multi-RAB combination. (NbEvt)

Data Source

RNC C-Node

Source Field

VS.RAB.MeanCellDCH.PS.Multiple.NeighbRnc.Other_Multi_RAB_Combo.NbEvt

Source Section

NeighbouringRnc

RABMeanCellDCHPSNeighbRncBgrd_DCH_DCHAvg

Mean number of PS RABs in Cell_DCH per Traffic class (TC) split up per transport channel format. (Avg)

Data Source

RNC C-Node

Source Field

VS.RAB.MeanCellDCH.PS.NeighbRnc.Bgrd_DCH_DCH.Avg

Source Section

NeighbouringRnc

RABMeanCellDCHPSNeighbRncBgrd_DCH_DCHCum

Mean number of PS RABs in Cell_DCH per Traffic class (TC) split up per transport channel format. (Cum)

Data Source

RNC C-Node

Source Field

VS.RAB.MeanCellDCH.PS.NeighbRnc.Bgrd_DCH_DCH.Cum

Source Section

NeighbouringRnc

RABMeanCellDCHPSNeighbRncBgrd_DCH_DCHMax

Mean number of PS RABs in Cell_DCH per Traffic class (TC) split up per transport channel format. (Max)

Data Source

RNC C-Node

Source Field

VS.RAB.MeanCellDCH.PS.NeighbRnc.Bgrd_DCH_DCH.Max

Source Section

NeighbouringRnc

RABMeanCellDCHPSNeighbRncBgrd_DCH_DCHMin

Mean number of PS RABs in Cell_DCH per Traffic class (TC) split up per transport channel format. (Min)

Data Source

RNC C-Node

Source Field

VS.RAB.MeanCellDCH.PS.NeighbRnc.Bgrd_DCH_DCH.Min

Source Section

NeighbouringRnc

RABMeanCellDCHPSNeighbRncBgrd_DCH_DCHNbEvt

Mean number of PS RABs in Cell_DCH per Traffic class (TC) split up per transport channel format. (NbEvt)

Data Source

RNC C-Node

Source Field

VS.RAB.MeanCellDCH.PS.NeighbRnc.Bgrd_DCH_DCH.NbEvt

Source Section

NeighbouringRnc

RABMeanCellDCHPSNeighbRncBgrd_DCH_HSDSCHAvg

Mean number of PS RABs in Cell_DCH per Traffic class (TC) split up per transport channel format. (Avg)

Data Source

RNC C-Node

Source Field

VS.RAB.MeanCellDCH.PS.NeighbRnc.Bgrd_DCH_HSDSCH.Avg

Source Section

NeighbouringRnc

RABMeanCellDCHPSNeighbRncBgrd_DCH_HSDSCHCum

Mean number of PS RABs in Cell_DCH per Traffic class (TC) split up per transport channel format. (Cum)

Data Source

RNC C-Node

Source Field

VS.RAB.MeanCellDCH.PS.NeighbRnc.Bgrd_DCH_HSDSCH.Cum

Source Section

NeighbouringRnc

RABMeanCellDCHPSNeighbRncBgrd_DCH_HSDSCHMax

Mean number of PS RABs in Cell_DCH per Traffic class (TC) split up per transport channel format. (Max)

Data Source

RNC C-Node

Source Field

VS.RAB.MeanCellDCH.PS.NeighbRnc.Bgrd_DCH_HSDSCH.Max

Source Section

NeighbouringRnc

RABMeanCellDCHPSNeighbRncBgrd_DCH_HSDSCHMin

Mean number of PS RABs in Cell_DCH per Traffic class (TC) split up per transport channel format. (Min)

Data Source

RNC C-Node

Source Field

VS.RAB.MeanCellDCH.PS.NeighbRnc.Bgrd_DCH_HSDSCH.Min

Source Section

NeighbouringRnc

RABMeanCellDCHPSNeighbRncBgrd_DCH_HSDSCHNbEvt

Mean number of PS RABs in Cell_DCH per Traffic class (TC) split up per transport channel format. (NbEvt)

Data Source

RNC C-Node

Source Field

VS.RAB.MeanCellDCH.PS.NeighbRnc.Bgrd_DCH_HSDSCH.NbEvt

Source Section

NeighbouringRnc

RABMeanCellDCHPSNeighbRncIntact_DCH_DCHAvg

Mean number of PS RABs in Cell_DCH per Traffic class (TC) split up per transport channel format. (Avg)

Data Source

RNC C-Node

Source Field

VS.RAB.MeanCellDCH.PS.NeighbRnc.Intact_DCH_DCH.Avg

Source Section

NeighbouringRnc

RABMeanCellDCHPSNeighbRncIntact_DCH_DCHCum

Mean number of PS RABs in Cell_DCH per Traffic class (TC) split up per transport channel format. (Cum)

Data Source

RNC C-Node

Source Field

VS.RAB.MeanCellDCH.PS.NeighbRnc.Intact_DCH_DCH.Cum

Source Section

NeighbouringRnc

RABMeanCellDCHPSNeighbRncIntact_DCH_DCHMax

Mean number of PS RABs in Cell_DCH per Traffic class (TC) split up per transport channel format. (Max)

Data Source

RNC C-Node

Source Field

VS.RAB.MeanCellDCH.PS.NeighbRnc.Intact_DCH_DCH.Max

Source Section

NeighbouringRnc

RABMeanCellDCHPSNeighbRncIntact_DCH_DCHMin

Mean number of PS RABs in Cell_DCH per Traffic class (TC) split up per transport channel format. (Min)

Data Source

RNC C-Node

Source Field

VS.RAB.MeanCellDCH.PS.NeighbRnc.Intact_DCH_DCH.Min

Source Section

NeighbouringRnc

RABMeanCellDCHPSNeighbRncIntact_DCH_DCHNbEvt

Mean number of PS RABs in Cell_DCH per Traffic class (TC) split up per transport channel format. (NbEvt)

Data Source

RNC C-Node

Source Field

VS.RAB.MeanCellDCH.PS.NeighbRnc.Intact_DCH_DCH.NbEvt

Source Section

NeighbouringRnc

RABMeanCellDCHPSNeighbRncIntact_DCH_HSDSCHAvg

Mean number of PS RABs in Cell_DCH per Traffic class (TC) split up per transport channel format. (Avg)

Data Source

RNC C-Node

Source Field

VS.RAB.MeanCellDCH.PS.NeighbRnc.Intact_DCH_HSDSCH.Avg

Source Section

NeighbouringRnc

RABMeanCellDCHPSNeighbRncIntact_DCH_HSDSCHCum

Mean number of PS RABs in Cell_DCH per Traffic class (TC) split up per transport channel format. (Cum)

Data Source

RNC C-Node

Source Field

VS.RAB.MeanCellDCH.PS.NeighbRnc.Intact_DCH_HSDSCH.Cum

Source Section

NeighbouringRnc

RABMeanCellDCHPSNeighbRncIntact_DCH_HSDSCHMax

Mean number of PS RABs in Cell_DCH per Traffic class (TC) split up per transport channel format. (Max)

Data Source

RNC C-Node

Source Field

VS.RAB.MeanCellDCH.PS.NeighbRnc.Intact_DCH_HSDSCH.Max

Source Section

NeighbouringRnc

RABMeanCellDCHPSNeighbRncIntact_DCH_HSDSCHMin

Mean number of PS RABs in Cell_DCH per Traffic class (TC) split up per transport channel format. (Min)

Data Source

RNC C-Node

Source Field

VS.RAB.MeanCellDCH.PS.NeighbRnc.Intact_DCH_HSDSCH.Min

Source Section

NeighbouringRnc

RABMeanCellDCHPSNeighbRncIntact_DCH_HSDSCHNbEvt

Mean number of PS RABs in Cell_DCH per Traffic class (TC) split up per transport channel format. (NbEvt)

Data Source

RNC C-Node

Source Field

VS.RAB.MeanCellDCH.PS.NeighbRnc.Intact_DCH_HSDSCH.NbEvt

Source Section

NeighbouringRnc

RABMeanCellDCHPSNeighbRncStrm_DCH_DCHAvg

Mean number of PS RABs in Cell_DCH per Traffic class (TC) split up per transport channel format. (Avg)

Data Source

RNC C-Node

Source Field

VS.RAB.MeanCellDCH.PS.NeighbRnc.Strm_DCH_DCH.Avg

Source Section

NeighbouringRnc

RABMeanCellDCHPSNeighbRncStrm_DCH_DCHCum

Mean number of PS RABs in Cell_DCH per Traffic class (TC) split up per transport channel format. (Cum)

Data Source

RNC C-Node

Source Field

VS.RAB.MeanCellDCH.PS.NeighbRnc.Strm_DCH_DCH.Cum

Source Section

NeighbouringRnc

RABMeanCellDCHPSNeighbRncStrm_DCH_DCHMax

Mean number of PS RABs in Cell_DCH per Traffic class (TC) split up per transport channel format. (Max)

Data Source

RNC C-Node

Source Field

VS.RAB.MeanCellDCH.PS.NeighbRnc.Strm_DCH_DCH.Max

Source Section

NeighbouringRnc

RABMeanCellDCHPSNeighbRncStrm_DCH_DCHMin

Mean number of PS RABs in Cell_DCH per Traffic class (TC) split up per transport channel format. (Min)

Data Source

RNC C-Node

Source Field

VS.RAB.MeanCellDCH.PS.NeighbRnc.Strm_DCH_DCH.Min

Source Section

NeighbouringRnc

RABMeanCellDCHPSNeighbRncStrm_DCH_DCHNbEvt

Mean number of PS RABs in Cell_DCH per Traffic class (TC) split up per transport channel format. (NbEvt)

Data Source

RNC C-Node

Source Field

VS.RAB.MeanCellDCH.PS.NeighbRnc.Strm_DCH_DCH.NbEvt

Source Section

NeighbouringRnc

RABMeanCellDCHPSNeighbRncStrm_DCH_HSDSCHAvg

Mean number of PS RABs in Cell_DCH per Traffic class (TC) split up per transport channel format. (Avg)

Data Source

RNC C-Node

Source Field

VS.RAB.MeanCellDCH.PS.NeighbRnc.Strm_DCH_HSDSCH.Avg

Source Section

NeighbouringRnc

RABMeanCellDCHPSNeighbRncStrm_DCH_HSDSCHCum

Mean number of PS RABs in Cell_DCH per Traffic class (TC) split up per transport channel format. (Cum)

Data Source

RNC C-Node

Source Field

VS.RAB.MeanCellDCH.PS.NeighbRnc.Strm_DCH_HSDSCH.Cum

Source Section

NeighbouringRnc

RABMeanCellDCHPSNeighbRncStrm_DCH_HSDSCHMax

Mean number of PS RABs in Cell_DCH per Traffic class (TC) split up per transport channel format. (Max)

Data Source

RNC C-Node

Source Field

VS.RAB.MeanCellDCH.PS.NeighbRnc.Strm_DCH_HSDSCH.Max

Source Section

NeighbouringRnc

RABMeanCellDCHPSNeighbRncStrm_DCH_HSDSCHMin

Mean number of PS RABs in Cell_DCH per Traffic class (TC) split up per transport channel format. (Min)

Data Source

RNC C-Node

Source Field

VS.RAB.MeanCellDCH.PS.NeighbRnc.Strm_DCH_HSDSCH.Min

Source Section

NeighbouringRnc

RABMeanCellDCHPSNeighbRncStrm_DCH_HSDSCHNbEvt

Mean number of PS RABs in Cell_DCH per Traffic class (TC) split up per transport channel format. (NbEvt)

Data Source

RNC C-Node

Source Field

VS.RAB.MeanCellDCH.PS.NeighbRnc.Strm_DCH_HSDSCH.NbEvt

Source Section

NeighbouringRnc

RABMeanCSVSumNeighbRncAvg

Mean number of successfully established CS voice RABs. The Erlang value can be derived from this counter. (Avg)

Data Source

RNC C-Node

Source Field

VS.RAB.Mean.CSV.Sum.NeighbRnc.Avg

Source Section

NeighbouringRnc

RABMeanCSVSumNeighbRncCum

Mean number of successfully established CS voice RABs. The Erlang value can be derived from this counter. (Cum)

Data Source

RNC C-Node

Source Field

VS.RAB.Mean.CSV.Sum.NeighbRnc.Cum

Source Section

NeighbouringRnc

RABMeanCSVSumNeighbRncMax

Mean number of successfully established CS voice RABs. The Erlang value can be derived from this counter. (Max)

Data Source

RNC C-Node

Source Field

VS.RAB.Mean.CSV.Sum.NeighbRnc.Max

Source Section

NeighbouringRnc

RABMeanCSVSumNeighbRncMin

Mean number of successfully established CS voice RABs. The Erlang value can be derived from this counter. (Min)

Data Source

RNC C-Node

Source Field

VS.RAB.Mean.CSV.Sum.NeighbRnc.Min

Source Section

NeighbouringRnc

RABMeanCSVSumNeighbRncNbEvt

Mean number of successfully established CS voice RABs. The Erlang value can be derived from this counter. (NbEvt)

Data Source

RNC C-Node

Source Field

VS.RAB.Mean.CSV.Sum.NeighbRnc.NbEvt

Source Section

NeighbouringRnc

RABNegotAllow_PS_Int_Bgrd_RABAssign

Number of Allowed RAB Negotiations for PS data with QoS class 'Interactive/Background' - RAB Assignment Procedure

Data Source

RNC

Source Field

VS.RAB.NegotAllowed.PS.Intact_Bgrd.RABAssign

Source Section

RncFunction

RABNegotAllow_PS_Int_Bgrd_RelocResAlloc

Number of Allowed RAB Negotiations for PS data with QoS class 'Interactive/Background' - Relocation Resource Allocation Procedure

Data Source

RNC

Source Field

VS.RAB.NegotAllowed.PS.Intact_Bgrd.RelocResAlloc

Source Section

RncFunction

RABNegotAllowedRABAssignNeighbRncIntactBgrd

Number of Allowed RAB Negotiations for RAB Assignment Request per neighboring RNC (IntactBgrd)

Data Source

RNC C-Node

Source Field

RAB.NegotAllowedRABAssign.NeighbRnc.IntactBgrd

Source Section

NeighbouringRnc

RABNegotAllowedRABAssignNeighbRncStrm

Number of Allowed RAB Negotiations for RAB Assignment Request per neighboring RNC (Strm)

Data Source

RNC C-Node

Source Field

RAB.NegotAllowedRABAssign.NeighbRnc.Strm

Source Section

NeighbouringRnc

RABNegotApplRABAssignNeighbRncIntactBgrd

Number of Applied RAB Negotiations for RAB Assignment per neighboring RNC (IntactBgrd)

Data Source

RNC C-Node

Source Field

RAB.NegotApplRABAssign.NeighbRnc.IntactBgrd

Source Section

NeighbouringRnc

RABNegotApplRABAssignNeighbRncStrm

Number of Applied RAB Negotiations for RAB Assignment per neighboring RNC (Strm)

Data Source

RNC C-Node

Source Field

RAB.NegotApplRABAssign.NeighbRnc.Strm

Source Section

NeighbouringRnc

RABSuccEstabCSNeighbRncConv64

Successfully Completed CS RAB Establishments per RAB Id. This counter does not take into account RAB successfully established for incoming relocations. (Conv64)

Data Source

RNC C-Node

Source Field

RAB.SuccEstab.CS.NeighbRnc.Conv64

Source Section

NeighbouringRnc

RABSuccEstabCSNeighbRncSpeechConv

Successfully Completed CS RAB Establishments per RAB Id. This counter does not take into account RAB successfully established for incoming relocations. (NeighbRnc.SpeechConv)

Data Source

RNC C-Node

Source Field

RAB.SuccEstab.CS.NeighbRnc.SpeechConv

Source Section

NeighbouringRnc

RABSuccEstabCSNeighbRncStrm

Successfully Completed CS RAB Establishments per RAB Id. This counter does not take into account RAB successfully established for incoming relocations. (Strm)

Data Source

RNC C-Node

Source Field

RAB.SuccEstab.CS.NeighbRnc.Strm

Source Section

NeighbouringRnc

RABSuccEstabCSVECNeighbRnc

This PM counts the number of Successful RAB Establishments for Emergency Calls. This PM is only applicable for Emergency Calls. (NeighbRnc)

Data Source

RNC C-Node

Source Field

RAB.SuccEstabCSV.EC.NeighbRnc

Source Section

NeighbouringRnc

RABSuccEstabPSMultipleNeighbRnc

Number of successful attempts to setup a PS "interactive" or "background" RAB on top of an existing PS "interactive" or "background" RAB for the same UE. (NeighbRnc)

Data Source

RNC C-Node

Source Field

VS.RAB.SuccEstabPS.Multiple.NeighbRnc

Source Section

NeighbouringRnc

RABSuccEstabPSNeighbRncHighRateBgrd

Successfully Completed RAB Establishments per PS RAB Id. This counter does not take into account RAB successfully established for incoming relocations. (NeighbRnc.HighRateBgrd)

Data Source

RNC C-Node

Source Field

RAB.SuccEstab.PS.NeighbRnc.HighRateBgrd

Source Section

NeighbouringRnc

RABSuccEstabPSNeighbRncHighRateIntact

Successfully Completed RAB Establishments per PS RAB Id. This counter does not take into account RAB successfully established for incoming relocations. (NeighbRnc.HighRateIntact)

Data Source

RNC C-Node

Source Field

RAB.SuccEstab.PS.NeighbRnc.HighRateIntact

Source Section

NeighbouringRnc

RABSuccEstabPSNeighbRncHighRateStrm

Successfully Completed RAB Establishments per PS RAB Id. This counter does not take into account RAB successfully established for incoming relocations. (NeighbRnc.HighRateStrm)

Data Source

RNC C-Node

Source Field

RAB.SuccEstab.PS.NeighbRnc.HighRateStrm

Source Section

NeighbouringRnc

RABSuccEstabPSNeighbRncLowRateBgrd

Successfully Completed RAB Establishments per PS RAB Id. This counter does not take into account RAB successfully established for incoming relocations. (NeighbRnc.LowRateBgrd)

Data Source

RNC C-Node

Source Field

RAB.SuccEstab.PS.NeighbRnc.LowRateBgrd

Source Section

NeighbouringRnc

RABSuccEstabPSNeighbRncLowRateIntact

Successfully Completed RAB Establishments per PS RAB Id. This counter does not take into account RAB successfully established for incoming relocations. (NeighbRnc.LowRateIntact)

Data Source

RNC C-Node

Source Field

RAB.SuccEstab.PS.NeighbRnc.LowRateIntact

Source Section

NeighbouringRnc

RABSuccEstabPSNeighbRncLowRateStrm

Successfully Completed RAB Establishments per PS RAB Id. This counter does not take into account RAB successfully established for incoming relocations. (NeighbRnc.LowRateStrm)

Data Source

RNC C-Node

Source Field

RAB.SuccEstab.PS.NeighbRnc.LowRateStrm

Source Section

NeighbouringRnc

RABSuccEstabPSReqNotGrantedNeighbRncDCH_HSDSCH_GrantedDCH_DCH

Successful RAB Establishments for service type PS data mapped on other UL and DL transport channel combination than the initially requested. (DCH_HSDSCH_GrantedDCH_DCH)

Data Source

RNC C-Node

Source Field

VS.RAB.SuccEstab.PS.ReqNotGranted.NeighbRnc.DCH_HSDSCH_GrantedDCH_DCH

Source Section

NeighbouringRnc

RABSuccEstabPSSumNeighbRnc

Total Number of Successfully Completed PS RAB Establishments per PS RAB Id (NeighbRnc)

Data Source

RNC C-Node

Source Field

RAB.SuccEstab.PS.Sum.NeighbRnc

Source Section

NeighbouringRnc

RABSuccEstabPSTrChnNeighbRncDCH_DCH

Successfully Completed PS RAB Establishments per transport channel format. This counter does not take into account RAB successfully established for incoming relocations. (NeighbRnc.DCH_DCH)

Data Source

RNC C-Node

Source Field

RAB.SuccEstab.PS.TrChn.NeighbRnc.DCH_DCH

Source Section

NeighbouringRnc

RABSuccEstabPSTrChnNeighbRncDCH_HSDSCH

Successfully Completed PS RAB Establishments per transport channel format. This counter does not take into account RAB successfully established for incoming relocations. (NeighbRnc.DCH_HSDSCH)

Data Source

RNC C-Node

Source Field

RAB.SuccEstab.PS.TrChn.NeighbRnc.DCH_HSDSCH

Source Section

NeighbouringRnc

RABSuccEstPSNoQue_DCH_HSDSCH_ConfDCH_DCH

Number of Successful RAB Establishments for PS data mapped on DCH/DCH instead of DCH/ HSDSCH transport channels

Data Source

RNC

Source Field

VS.RAB.SuccEstabPSNoQueuing.DCH_HSDSCH.Conf.DCH_DCH

Source Section

RncFunction

RABSuccEstPSNoQue_EDCH_HSDSCH_ConfDCHDCH

Number of Successful RAB Establishments for PS data mapped on DCH/ DCH instead of EDCH/HSDSCH transport channels

Data Source

RNC

Source Field

VS.RAB.SuccEstabPSNoQueuing.EDCH_HSDSCH.Conf.DCH_DCH

Source Section

RncFunction

RABSuccEstPSNoQue_EDCHHSDSCH_CfDCHHSDSCH

Number of Successful RAB Establishments for PS data mapped on DCH/HS-DSCH instead of EDCH/HSDSCH transport channels

Data Source

RNC

Source Field

VS.RAB.SuccEstabPSNoQueuing.EDCH_HSDSCH.Conf.DCH_HSDSCH

Source Section

RncFunction

RadioBearerEstablishmentUnsuccessNeighbRncInvalidRabParametersValue

Number of radio bearer setup not successfully established (from serving iRNC), with no RADIO_BEARER_SETUP_REQUEST when the reference Cell of the call belongs to a drift RNC (InvalidRabParametersValue)

Data Source

RNC C-Node

Source Field

VS.RadioBearerEstablishmentUnsuccessNeighbRnc.InvalidRabParametersValue

Source Section

NeighbouringRnc

RadioBearerEstablishmentUnsuccessNeighbRncProblemRadioResource

Number of radio bearer setup not successfully established (from serving iRNC), with no RADIO_BEARER_SETUP_REQUEST when the reference Cell of the call belongs to a drift RNC (ProblemRadioResource)

Data Source

RNC C-Node

Source Field

VS.RadioBearerEstablishmentUnsuccessNeighbRnc.ProblemRadioResource

Source Section

NeighbouringRnc

RadioBearerEstablishmentUnsuccessNeighbRncUnspecified

Number of radio bearer setup not successfully established (from serving iRNC), with no RADIO_BEARER_SETUP_REQUEST when the reference Cell of the call belongs to a drift RNC (Unspecified)

Data Source

RNC C-Node

Source Field

VS.RadioBearerEstablishmentUnsuccessNeighbRnc.Unspecified

Source Section

NeighbouringRnc

RadioBearerReconfigurationSuccessNeighbRncRbCsData

Number of Radio Bearer reconfigured successfully. Incremented as many times as there are cells of the active set belonging to a neighbouring Rnc (RbCsData)

Data Source

RNC C-Node

Source Field

VS.RadioBearerReconfigurationSuccessNeighbRnc.RbCsData

Source Section

NeighbouringRnc

RadioBearerReconfigurationSuccessNeighbRncRbCsDataHsdpa

Number of Radio Bearer reconfigured successfully. Incremented as many times as there are cells of the active set belonging to a neighbouring Rnc (RbCsDataHsdpa)

Data Source

RNC C-Node

Source Field

VS.RadioBearerReconfigurationSuccessNeighbRnc.RbCsDataHsdpa

Source Section

NeighbouringRnc

RadioBearerReconfigurationSuccessNeighbRncRbCsDataPsDch

Number of Radio Bearer reconfigured successfully. Incremented as many times as there are cells of the active set belonging to a neighbouring Rnc (RbCsDataPsDch)

Data Source

RNC C-Node

Source Field

VS.RadioBearerReconfigurationSuccessNeighbRnc.RbCsDataPsDch

Source Section

NeighbouringRnc

RadioBearerReconfigurationSuccessNeighbRncRbCsSpeech

Number of Radio Bearer reconfigured successfully. Incremented as many times as there are cells of the active set belonging to a neighbouring Rnc (RbCsSpeech)

Data Source

RNC C-Node

Source Field

VS.RadioBearerReconfigurationSuccessNeighbRnc.RbCsSpeech

Source Section

NeighbouringRnc

RadioBearerReconfigurationSuccessNeighbRncRbCsSpeechPsDch

Number of Radio Bearer reconfigured successfully. Incremented as many times as there are cells of the active set belonging to a neighbouring Rnc (RbCsSpeechPsDch)

Data Source

RNC C-Node

Source Field

VS.RadioBearerReconfigurationSuccessNeighbRnc.RbCsSpeechPsDch

Source Section

NeighbouringRnc

RadioBearerReconfigurationSuccessNeighbRncRbCsSpeechPsDchHsdpa

Number of Radio Bearer reconfigured successfully. Incremented as many times as there are cells of the active set belonging to a neighbouring Rnc (RbCsSpeechPsDchHsdpa)

Data Source

RNC C-Node

Source Field

VS.RadioBearerReconfigurationSuccessNeighbRnc.RbCsSpeechPsDchHsdpa

Source Section

NeighbouringRnc

RadioBearerReconfigurationSuccessNeighbRncRbCsSpeechPsDchPsDch

Number of Radio Bearer reconfigured successfully. Incremented as many times as there are cells of the active set belonging to a neighbouring Rnc (RbCsSpeechPsDchPsDch)

Data Source

RNC C-Node

Source Field

VS.RadioBearerReconfigurationSuccessNeighbRnc.RbCsSpeechPsDchPsDch

Source Section

NeighbouringRnc

RadioBearerReconfigurationSuccessNeighbRncRbCsSpeechPsHsdpa

Number of Radio Bearer reconfigured successfully. Incremented as many times as there are cells of the active set belonging to a neighbouring Rnc (RbCsSpeechPsHsdpa)

Data Source

RNC C-Node

Source Field

VS.RadioBearerReconfigurationSuccessNeighbRnc.RbCsSpeechPsHsdpa

Source Section

NeighbouringRnc

RadioBearerReconfigurationSuccessNeighbRncRbCsStr

Number of Radio Bearer reconfigured successfully. Incremented as many times as there are cells of the active set belonging to a neighbouring Rnc (RbCsStr)

Data Source

RNC C-Node

Source Field

VS.RadioBearerReconfigurationSuccessNeighbRnc.RbCsStr

Source Section

NeighbouringRnc

RadioBearerReconfigurationSuccessNeighbRncRbPch

Number of Radio Bearer reconfigured successfully. Incremented as many times as there are cells of the active set belonging to a neighbouring Rnc (RbPch)

Data Source

RNC C-Node

Source Field

VS.RadioBearerReconfigurationSuccessNeighbRnc.RbPch

Source Section

NeighbouringRnc

RadioBearerReconfigurationSuccessNeighbRncRbPsDchDlDchUl

Number of Radio Bearer reconfigured successfully. Incremented as many times as there are cells of the active set belonging to a neighbouring Rnc (RbPsDchDlDchUl)

Data Source

RNC C-Node

Source Field

VS.RadioBearerReconfigurationSuccessNeighbRnc.RbPsDchDlDchUl

Source Section

NeighbouringRnc

RadioBearerReconfigurationSuccessNeighbRncRbPsDchPsDch

Number of Radio Bearer reconfigured successfully. Incremented as many times as there are cells of the active set belonging to a neighbouring Rnc (RbPsDchPsDch)

Data Source

RNC C-Node

Source Field

VS.RadioBearerReconfigurationSuccessNeighbRnc.RbPsDchPsDch

Source Section

NeighbouringRnc

RadioBearerReconfigurationSuccessNeighbRncRbPsDchPsHsdpa

Number of Radio Bearer reconfigured successfully. Incremented as many times as there are cells of the active set belonging to a neighbouring Rnc (RbPsDchPsHsdpa)

Data Source

RNC C-Node

Source Field

VS.RadioBearerReconfigurationSuccessNeighbRnc.RbPsDchPsHsdpa

Source Section

NeighbouringRnc

RadioBearerReconfigurationSuccessNeighbRncRbPsFach

Number of Radio Bearer reconfigured successfully. Incremented as many times as there are cells of the active set belonging to a neighbouring Rnc (RbPsFach)

Data Source

RNC C-Node

Source Field

VS.RadioBearerReconfigurationSuccessNeighbRnc.RbPsFach

Source Section

NeighbouringRnc

RadioBearerReconfigurationSuccessNeighbRncRbPsHsdpaDlDchEdchUl

Number of Radio Bearer reconfigured successfully. Incremented as many times as there are cells of the active set belonging to a neighbouring Rnc (RbPsHsdpaDlDchEdchUl)

Data Source

RNC C-Node

Source Field

VS.RadioBearerReconfigurationSuccessNeighbRnc.RbPsHsdpaDlDchEdchUl

Source Section

NeighbouringRnc

RadioBearerReconfigurationSuccessNeighbRncRbPsHsdpaDlDchUl

Number of Radio Bearer reconfigured successfully. Incremented as many times as there are cells of the active set belonging to a neighbouring Rnc (RbPsHsdpaDlDchUl)

Data Source

RNC C-Node

Source Field

VS.RadioBearerReconfigurationSuccessNeighbRnc.RbPsHsdpaDlDchUl

Source Section

NeighbouringRnc

RadioBearerReconfigurationSuccessNeighbRncRbPsHsdpaDlEdchUl

Number of Radio Bearer reconfigured successfully. Incremented as many times as there are cells of the active set belonging to a neighbouring Rnc (RbPsHsdpaDlEdchUl)

Data Source

RNC C-Node

Source Field

VS.RadioBearerReconfigurationSuccessNeighbRnc.RbPsHsdpaDlEdchUl

Source Section

NeighbouringRnc

RadioBearerReconfigurationSuccessNeighbRncRbReconfOther

Number of Radio Bearer reconfigured successfully. Incremented as many times as there are cells of the active set belonging to a neighbouring Rnc (RbReconfOther)

Data Source

RNC C-Node

Source Field

VS.RadioBearerReconfigurationSuccessNeighbRnc.RbReconfOther

Source Section

NeighbouringRnc

RadioBearerReconfigurationSuccessNeighbRncRbSignalling

Number of Radio Bearer reconfigured successfully. Incremented as many times as there are cells of the active set belonging to a neighbouring Rnc (RbSignalling)

Data Source

RNC C-Node

Source Field

VS.RadioBearerReconfigurationSuccessNeighbRnc.RbSignalling

Source Section

NeighbouringRnc

RadioBearerReconfigurationUnsuccessNeighbRncRadioBearerReconfigurationFailure

Number of radio bearer reconfiguration not successfully established when the reference Cell of the call belongs to a drift RNC. Incremented only once by RB that failed to be reconfigured (RadioBearerReconfigurationFailure)

Data Source

RNC C-Node

Source Field

VS.RadioBearerReconfigurationUnsuccessNeighbRnc.RadioBearerReconfigurationFailure

Source Section

NeighbouringRnc

RadioBearerReconfigurationUnsuccessNeighbRncTimeout

Number of radio bearer reconfiguration not successfully established when the reference Cell of the call belongs to a drift RNC. Incremented only once by RB that failed to be reconfigured (Timeout)

Data Source

RNC C-Node

Source Field

VS.RadioBearerReconfigurationUnsuccessNeighbRnc.Timeout

Source Section

NeighbouringRnc

RadioBearerReleaseSuccessNeighbRncSrcCallCsData

Number of Radio Bearer released successfully when the reference Cell of the call belongs to a drift RNC (SrcCallCsData)

Data Source

RNC C-Node

Source Field

VS.RadioBearerReleaseSuccessNeighbRnc.SrcCallCsData

Source Section

NeighbouringRnc

RadioBearerReleaseSuccessNeighbRncSrcCallCsSpeechNbLrAmr

Number of Radio Bearer released successfully when the reference Cell of the call belongs to a drift RNC (SrcCallCsSpeechNbLrAmr)

Data Source

RNC C-Node

Source Field

VS.RadioBearerReleaseSuccessNeighbRnc.SrcCallCsSpeechNbLrAmr

Source Section

NeighbouringRnc

RadioBearerReleaseSuccessNeighbRncSrcCallCsSpeechWbAmr

Number of Radio Bearer released successfully when the reference Cell of the call belongs to a drift RNC (SrcCallCsSpeechWbAmr)

Data Source

RNC C-Node

Source Field

VS.RadioBearerReleaseSuccessNeighbRnc.SrcCallCsSpeechWbAmr

Source Section

NeighbouringRnc

RadioBearerReleaseSuccessNeighbRncSrcCallCsStr

Number of Radio Bearer released successfully when the reference Cell of the call belongs to a drift RNC (SrcCallCsStr)

Data Source

RNC C-Node

Source Field

VS.RadioBearerReleaseSuccessNeighbRnc.SrcCallCsStr

Source Section

NeighbouringRnc

RadioBearerReleaseSuccessNeighbRncSrcCallHsdpaEdch

Number of Radio Bearer released successfully when the reference Cell of the call belongs to a drift RNC (SrcCallHsdpaEdch)

Data Source

RNC C-Node

Source Field

VS.RadioBearerReleaseSuccessNeighbRnc.SrcCallHsdpaEdch

Source Section

NeighbouringRnc

RadioBearerReleaseSuccessNeighbRncSrcCallHsdpaR99

Number of Radio Bearer released successfully when the reference Cell of the call belongs to a drift RNC (SrcCallHsdpaR99)

Data Source

RNC C-Node

Source Field

VS.RadioBearerReleaseSuccessNeighbRnc.SrcCallHsdpaR99

Source Section

NeighbouringRnc

RadioBearerReleaseSuccessNeighbRncSrcCallOther

Number of Radio Bearer released successfully when the reference Cell of the call belongs to a drift RNC (SrcCallOther)

Data Source

RNC C-Node

Source Field

VS.RadioBearerReleaseSuccessNeighbRnc.SrcCallOther

Source Section

NeighbouringRnc

RadioBearerReleaseSuccessNeighbRncSrcCallPsIb128

Number of Radio Bearer released successfully when the reference Cell of the call belongs to a drift RNC (SrcCallPsIb128)

Data Source

RNC C-Node

Source Field

VS.RadioBearerReleaseSuccessNeighbRnc.SrcCallPsIb128

Source Section

NeighbouringRnc

RadioBearerReleaseSuccessNeighbRncSrcCallPsIb256

Number of Radio Bearer released successfully when the reference Cell of the call belongs to a drift RNC (SrcCallPsIb256)

Data Source

RNC C-Node

Source Field

VS.RadioBearerReleaseSuccessNeighbRnc.SrcCallPsIb256

Source Section

NeighbouringRnc

RadioBearerReleaseSuccessNeighbRncSrcCallPsIb384

Number of Radio Bearer released successfully when the reference Cell of the call belongs to a drift RNC (SrcCallPsIb384)

Data Source

RNC C-Node

Source Field

VS.RadioBearerReleaseSuccessNeighbRnc.SrcCallPsIb384

Source Section

NeighbouringRnc

RadioBearerReleaseSuccessNeighbRncSrcCallPsIb64

Number of Radio Bearer released successfully when the reference Cell of the call belongs to a drift RNC (SrcCallPsIb64)

Data Source

RNC C-Node

Source Field

VS.RadioBearerReleaseSuccessNeighbRnc.SrcCallPsIb64

Source Section

NeighbouringRnc

RadioBearerReleaseSuccessNeighbRncSrcCallPsIbLt64

Number of Radio Bearer released successfully when the reference Cell of the call belongs to a drift RNC (SrcCallPsIbLt64)

Data Source

RNC C-Node

Source Field

VS.RadioBearerReleaseSuccessNeighbRnc.SrcCallPsIbLt64

Source Section

NeighbouringRnc

RadioBearerReleaseSuccessNeighbRncSrcCallPsStr128

Number of Radio Bearer released successfully when the reference Cell of the call belongs to a drift RNC (SrcCallPsStr128)

Data Source

RNC C-Node

Source Field

VS.RadioBearerReleaseSuccessNeighbRnc.SrcCallPsStr128

Source Section

NeighbouringRnc

RadioBearerReleaseSuccessNeighbRncSrcCallPsStr256

Number of Radio Bearer released successfully when the reference Cell of the call belongs to a drift RNC (SrcCallPsStr256)

Data Source

RNC C-Node

Source Field

VS.RadioBearerReleaseSuccessNeighbRnc.SrcCallPsStr256

Source Section

NeighbouringRnc

RadioBearerReleaseSuccessNeighbRncSrcCallPsStr384

Number of Radio Bearer released successfully when the reference Cell of the call belongs to a drift RNC (SrcCallPsStr384)

Data Source

RNC C-Node

Source Field

VS.RadioBearerReleaseSuccessNeighbRnc.SrcCallPsStr384

Source Section

NeighbouringRnc

RadioBearerReleaseSuccessNeighbRncSrcCallPsStr64

Number of Radio Bearer released successfully when the reference Cell of the call belongs to a drift RNC (SrcCallPsStr64)

Data Source

RNC C-Node

Source Field

VS.RadioBearerReleaseSuccessNeighbRnc.SrcCallPsStr64

Source Section

NeighbouringRnc

RadioBearerReleaseSuccessNeighbRncSrcCallPsStrLt64

Number of Radio Bearer released successfully when the reference Cell of the call belongs to a drift RNC (SrcCallPsStrLt64)

Data Source

RNC C-Node

Source Field

VS.RadioBearerReleaseSuccessNeighbRnc.SrcCallPsStrLt64

Source Section

NeighbouringRnc

RadioBearerReleaseSuccessNeighbRncSrcCallTrbFach

Number of Radio Bearer released successfully when the reference Cell of the call belongs to a drift RNC (SrcCallTrbFach)

Data Source

RNC C-Node

Source Field

VS.RadioBearerReleaseSuccessNeighbRnc.SrcCallTrbFach

Source Section

NeighbouringRnc

RadioBearerReleaseUnsuccessNeighbRncRadioBearerReleaseFailure

Number of radio bearer release not successfully established when the reference Cell of the call belongs to a drift RNC (RadioBearerReleaseFailure)

Data Source

RNC C-Node

Source Field

VS.RadioBearerReleaseUnsuccessNeighbRnc.RadioBearerReleaseFailure

Source Section

NeighbouringRnc

RadioBearerReleaseUnsuccessNeighbRncTimeout

Number of radio bearer release not successfully established when the reference Cell of the call belongs to a drift RNC (Timeout)

Data Source

RNC C-Node

Source Field

VS.RadioBearerReleaseUnsuccessNeighbRnc.Timeout

Source Section

NeighbouringRnc

RadioBearerSetupSuccessNeighbRncTgtCallCsData

Number of Radio Bearer successfully setup (from serving iRNC) when the reference Cell of the call belongs to a drift RNC. The counter should be pegged multiple times for multiple RB successfully setup in the same procedure. (TgtCallCsData)

Data Source

RNC C-Node

Source Field

VS.RadioBearerSetupSuccessNeighbRnc.TgtCallCsData

Source Section

NeighbouringRnc

RadioBearerSetupSuccessNeighbRncTgtCallCsSpeechNbLrAmr

Number of Radio Bearer successfully setup (from serving iRNC) when the reference Cell of the call belongs to a drift RNC. The counter should be pegged multiple times for multiple RB successfully setup in the same procedure. (TgtCallCsSpeechNbLrAmr)

Data Source

RNC C-Node

Source Field

VS.RadioBearerSetupSuccessNeighbRnc.TgtCallCsSpeechNbLrAmr

Source Section

NeighbouringRnc

RadioBearerSetupSuccessNeighbRncTgtCallCsSpeechWbAmr

Number of Radio Bearer successfully setup (from serving iRNC) when the reference Cell of the call belongs to a drift RNC. The counter should be pegged multiple times for multiple RB successfully setup in the same procedure. (TgtCallCsSpeechWbAmr)

Data Source

RNC C-Node

Source Field

VS.RadioBearerSetupSuccessNeighbRnc.TgtCallCsSpeechWbAmr

Source Section

NeighbouringRnc

RadioBearerSetupSuccessNeighbRncTgtCallCsStr

Number of Radio Bearer successfully setup (from serving iRNC) when the reference Cell of the call belongs to a drift RNC. The counter should be pegged multiple times for multiple RB successfully setup in the same procedure. (TgtCallCsStr)

Data Source

RNC C-Node

Source Field

VS.RadioBearerSetupSuccessNeighbRnc.TgtCallCsStr

Source Section

NeighbouringRnc

RadioBearerSetupSuccessNeighbRncTgtCallHsdpaEdch

Number of Radio Bearer successfully setup (from serving iRNC) when the reference Cell of the call belongs to a drift RNC. The counter should be pegged multiple times for multiple RB successfully setup in the same procedure. (TgtCallHsdpaEdch)

Data Source

RNC C-Node

Source Field

VS.RadioBearerSetupSuccessNeighbRnc.TgtCallHsdpaEdch

Source Section

NeighbouringRnc

RadioBearerSetupSuccessNeighbRncTgtCallHsdpaR99

Number of Radio Bearer successfully setup (from serving iRNC) when the reference Cell of the call belongs to a drift RNC. The counter should be pegged multiple times for multiple RB successfully setup in the same procedure. (TgtCallHsdpaR99)

Data Source

RNC C-Node

Source Field

VS.RadioBearerSetupSuccessNeighbRnc.TgtCallHsdpaR99

Source Section

NeighbouringRnc

RadioBearerSetupSuccessNeighbRncTgtCallOther

Number of Radio Bearer successfully setup (from serving iRNC) when the reference Cell of the call belongs to a drift RNC. The counter should be pegged multiple times for multiple RB successfully setup in the same procedure. (TgtCallOther)

Data Source

RNC C-Node

Source Field

VS.RadioBearerSetupSuccessNeighbRnc.TgtCallOther

Source Section

NeighbouringRnc

RadioBearerSetupSuccessNeighbRncTgtCallPsIb128

Number of Radio Bearer successfully setup (from serving iRNC) when the reference Cell of the call belongs to a drift RNC. The counter should be pegged multiple times for multiple RB successfully setup in the same procedure. (TgtCallPsIb128)

Data Source

RNC C-Node

Source Field

VS.RadioBearerSetupSuccessNeighbRnc.TgtCallPsIb128

Source Section

NeighbouringRnc

RadioBearerSetupSuccessNeighbRncTgtCallPsIb256

Number of Radio Bearer successfully setup (from serving iRNC) when the reference Cell of the call belongs to a drift RNC. The counter should be pegged multiple times for multiple RB successfully setup in the same procedure. (TgtCallPsIb256)

Data Source

RNC C-Node

Source Field

VS.RadioBearerSetupSuccessNeighbRnc.TgtCallPsIb256

Source Section

NeighbouringRnc

RadioBearerSetupSuccessNeighbRncTgtCallPsIb384

Number of Radio Bearer successfully setup (from serving iRNC) when the reference Cell of the call belongs to a drift RNC. The counter should be pegged multiple times for multiple RB successfully setup in the same procedure. (TgtCallPsIb384)

Data Source

RNC C-Node

Source Field

VS.RadioBearerSetupSuccessNeighbRnc.TgtCallPsIb384

Source Section

NeighbouringRnc

RadioBearerSetupSuccessNeighbRncTgtCallPsIb64

Number of Radio Bearer successfully setup (from serving iRNC) when the reference Cell of the call belongs to a drift RNC. The counter should be pegged multiple times for multiple RB successfully setup in the same procedure. (TgtCallPsIb64)

Data Source

RNC C-Node

Source Field

VS.RadioBearerSetupSuccessNeighbRnc.TgtCallPsIb64

Source Section

NeighbouringRnc

RadioBearerSetupSuccessNeighbRncTgtCallPsIbLt64

Number of Radio Bearer successfully setup (from serving iRNC) when the reference Cell of the call belongs to a drift RNC. The counter should be pegged multiple times for multiple RB successfully setup in the same procedure. (TgtCallPsIbLt64)

Data Source

RNC C-Node

Source Field

VS.RadioBearerSetupSuccessNeighbRnc.TgtCallPsIbLt64

Source Section

NeighbouringRnc

RadioBearerSetupSuccessNeighbRncTgtCallPsStr128

Number of Radio Bearer successfully setup (from serving iRNC) when the reference Cell of the call belongs to a drift RNC. The counter should be pegged multiple times for multiple RB successfully setup in the same procedure. (TgtCallPsStr128)

Data Source

RNC C-Node

Source Field

VS.RadioBearerSetupSuccessNeighbRnc.TgtCallPsStr128

Source Section

NeighbouringRnc

RadioBearerSetupSuccessNeighbRncTgtCallPsStr256

Number of Radio Bearer successfully setup (from serving iRNC) when the reference Cell of the call belongs to a drift RNC. The counter should be pegged multiple times for multiple RB successfully setup in the same procedure. (TgtCallPsStr256)

Data Source

RNC C-Node

Source Field

VS.RadioBearerSetupSuccessNeighbRnc.TgtCallPsStr256

Source Section

NeighbouringRnc

RadioBearerSetupSuccessNeighbRncTgtCallPsStr384

Number of Radio Bearer successfully setup (from serving iRNC) when the reference Cell of the call belongs to a drift RNC. The counter should be pegged multiple times for multiple RB successfully setup in the same procedure. (TgtCallPsStr384)

Data Source

RNC C-Node

Source Field

VS.RadioBearerSetupSuccessNeighbRnc.TgtCallPsStr384

Source Section

NeighbouringRnc

RadioBearerSetupSuccessNeighbRncTgtCallPsStr64

Number of Radio Bearer successfully setup (from serving iRNC) when the reference Cell of the call belongs to a drift RNC. The counter should be pegged multiple times for multiple RB successfully setup in the same procedure. (TgtCallPsStr64)

Data Source

RNC C-Node

Source Field

VS.RadioBearerSetupSuccessNeighbRnc.TgtCallPsStr64

Source Section

NeighbouringRnc

RadioBearerSetupSuccessNeighbRncTgtCallPsStrLt64

Number of Radio Bearer successfully setup (from serving iRNC) when the reference Cell of the call belongs to a drift RNC. The counter should be pegged multiple times for multiple RB successfully setup in the same procedure. (TgtCallPsStrLt64)

Data Source

RNC C-Node

Source Field

VS.RadioBearerSetupSuccessNeighbRnc.TgtCallPsStrLt64

Source Section

NeighbouringRnc

RadioBearerSetupUnsuccessNeighbRncOther

Number of radio bearer setup not successfully setup (from serving iRNC) when the reference Cell of the call belongs to a drift RNC (Other)

Data Source

RNC C-Node

Source Field

VS.RadioBearerSetupUnsuccessNeighbRnc.Other

Source Section

NeighbouringRnc

RadioBearerSetupUnsuccessNeighbRncRadioBearerSetupFailure

Number of radio bearer setup not successfully setup (from serving iRNC) when the reference Cell of the call belongs to a drift RNC (RadioBearerSetupFailure)

Data Source

RNC C-Node

Source Field

VS.RadioBearerSetupUnsuccessNeighbRnc.RadioBearerSetupFailure

Source Section

NeighbouringRnc

RadioBearerSetupUnsuccessNeighbRncTimeout

Number of radio bearer setup not successfully setup (from serving iRNC) when the reference Cell of the call belongs to a drift RNC (Timeout)

Data Source

RNC C-Node

Source Field

VS.RadioBearerSetupUnsuccessNeighbRnc.Timeout

Source Section

NeighbouringRnc

RB_ReconfAtt_HSDSCH_DCH_sum

Total Number of RB Reconfiguration Attempts: HS-DSCH to DCH

Data Source

RNC

Source Field

VS.RB.ReconfAtt.HSDSCH_DCH.sum

Source Section

Radio Bearer Reconfiguration HS-DSCH to DCH

RB_ReconfAtt_PSStrm_HSDSCH_DCH_cellsupport

This measurement counts the total number of RB reconfiguration attempts for transition from HS-DSCH to DCH for a streaming RAB. This counter provides the total RNC attempts to transition a UE from HS-DSCH to DCH with a Streaming RAB due to Streaming HSDPA being disabled in the cell due to OAM configuration.

Data Source

RNC

Source Field

VS.RB.ReconfAtt.PSStrm.HSDSCH_DCH.cellsupport

Source Section

Radio Bearer Reconfiguration HS-DSCH to DCH

RB_ReconfAtt_PSStrm_HSDSCH_DCH_Cmfail

This measurement counts the total number of RB reconfiguration attempts for transition from HS-DSCH to DCH for a streaming RAB. This counter provides the total RNC attempts to transition a UE from HS-DSCH to DCH with a Streaming RAB due to compressed mode failure.

Data Source

RNC

Source Field

VS.RB.ReconfAtt.PSStrm.HSDSCH_DCH.CMfail

Source Section

Radio Bearer Reconfiguration HS-DSCH to DCH

RB_ReconfAtt_PSStrm_HSDSCH_DCH_RLF

This measurement counts the total number of RB reconfiguration attempts for transition from HS-DSCH to DCH for a streaming RAB. This counter provides the total RNC attempts to transition a UE from HS-DSCH to DCH with a Streaming RAB due to radio link failure on the HSDPA serving cell.

Data Source

RNC

Source Field

VS.RB.ReconfAtt.PSStrm.HSDSCH_DCH.RLF

Source Section

Radio Bearer Reconfiguration HS-DSCH to DCH

RB_ReconfAtt_PSStrm_HSDSCH_DCH_sum

This measurement counts the total number of RB reconfiguration attempts for transition from HS-DSCH to DCH for a streaming RAB. This counter provides the total RNC attempts to transition a UE from HS-DSCH to DCH with a Streaming RAB.

Data Source

RNC

Source Field

VS.RB.ReconfAtt.PSStrm.HSDSCH_DCH.sum

Source Section

Radio Bearer Reconfiguration HS-DSCH to DCH

RB_ReconfFail_HSDSCH_DCH_causeDBC

Number of Failed RB Reconfiguration Attempts: HS-DSCH to DCH due to DBC

Data Source

RNC

Source Field

VS.RB.ReconfFail.HSDSCH_DCH.causeDBC

Source Section

Radio Bearer Reconfiguration HS-DSCH to DCH

RB_ReconfFail_HSDSCH_DCH_sum

Total Number of Failed RB Reconfiguration: HS-DSCH to DCH

Data Source

RNC

Source Field

VS.RB.ReconfFail.HSDSCH_DCH.sum

Source Section

Radio Bearer Reconfiguration HS-DSCH to DCH

RBReconfReqNRncRbCsData

Number of RB Reconfiguration decisions (leading or not to a RB Setup/RB Reconfiguration, i.e. incremented even if CAC rejects the reconfiguration) when the reference cell is on a drift RNC. Incremented based on neighbouring RNC id. (RbCsData)

Data Source

RNC C-Node

Source Field

VS.RBReconfReqNRnc.RbCsData

Source Section

NeighbouringRnc

RBReconfReqNRncRbCsDataHsdpa

Number of RB Reconfiguration decisions (leading or not to a RB Setup/RB Reconfiguration, i.e. incremented even if CAC rejects the reconfiguration) when the reference cell is on a drift RNC. Incremented based on neighbouring RNC id. (RbCsDataHsdpa)

Data Source

RNC C-Node

Source Field

VS.RBReconfReqNRnc.RbCsDataHsdpa

Source Section

NeighbouringRnc

RBReconfReqNRncRbCsDataPsDch

Number of RB Reconfiguration decisions (leading or not to a RB Setup/RB Reconfiguration, i.e. incremented even if CAC rejects the reconfiguration) when the reference cell is on a drift RNC. Incremented based on neighbouring RNC id. (RbCsDataPsDch)

Data Source

RNC C-Node

Source Field

VS.RBReconfReqNRnc.RbCsDataPsDch

Source Section

NeighbouringRnc

RBReconfReqNRncRbCsSpeech

Number of RB Reconfiguration decisions (leading or not to a RB Setup/RB Reconfiguration, i.e. incremented even if CAC rejects the reconfiguration) when the reference cell is on a drift RNC. Incremented based on neighbouring RNC id. (RbCsSpeech)

Data Source

RNC C-Node

Source Field

VS.RBReconfReqNRnc.RbCsSpeech

Source Section

NeighbouringRnc

RBReconfReqNRncRbCsSpeechPsDch

Number of RB Reconfiguration decisions (leading or not to a RB Setup/RB Reconfiguration, i.e. incremented even if CAC rejects the reconfiguration) when the reference cell is on a drift RNC. Incremented based on neighbouring RNC id. (RbCsSpeechPsDch)

Data Source

RNC C-Node

Source Field

VS.RBReconfReqNRnc.RbCsSpeechPsDch

Source Section

NeighbouringRnc

RBReconfReqNRncRbCsSpeechPsDchHsdpa

Number of RB Reconfiguration decisions (leading or not to a RB Setup/RB Reconfiguration, i.e. incremented even if CAC rejects the reconfiguration) when the reference cell is on a drift RNC. Incremented based on neighbouring RNC id. (RbCsSpeechPsDchHsdpa)

Data Source

RNC C-Node

Source Field

VS.RBReconfReqNRnc.RbCsSpeechPsDchHsdpa

Source Section

NeighbouringRnc

RBReconfReqNRncRbCsSpeechPsDchPsDch

Number of RB Reconfiguration decisions (leading or not to a RB Setup/RB Reconfiguration, i.e. incremented even if CAC rejects the reconfiguration) when the reference cell is on a drift RNC. Incremented based on neighbouring RNC id. (RbCsSpeechPsDchPsDch)

Data Source

RNC C-Node

Source Field

VS.RBReconfReqNRnc.RbCsSpeechPsDchPsDch

Source Section

NeighbouringRnc

RBReconfReqNRncRbCsSpeechPsHsdpa

Number of RB Reconfiguration decisions (leading or not to a RB Setup/RB Reconfiguration, i.e. incremented even if CAC rejects the reconfiguration) when the reference cell is on a drift RNC. Incremented based on neighbouring RNC id. (RbCsSpeechPsHsdpa)

Data Source

RNC C-Node

Source Field

VS.RBReconfReqNRnc.RbCsSpeechPsHsdpa

Source Section

NeighbouringRnc

RBReconfReqNRncRbCsStr

Number of RB Reconfiguration decisions (leading or not to a RB Setup/RB Reconfiguration, i.e. incremented even if CAC rejects the reconfiguration) when the reference cell is on a drift RNC. Incremented based on neighbouring RNC id. (RbCsStr)

Data Source

RNC C-Node

Source Field

VS.RBReconfReqNRnc.RbCsStr

Source Section

NeighbouringRnc

RBReconfReqNRncRbPch

Number of RB Reconfiguration decisions (leading or not to a RB Setup/RB Reconfiguration, i.e. incremented even if CAC rejects the reconfiguration) when the reference cell is on a drift RNC. Incremented based on neighbouring RNC id. (RbPch)

Data Source

RNC C-Node

Source Field

VS.RBReconfReqNRnc.RbPch

Source Section

NeighbouringRnc

RBReconfReqNRncRbPsDchDlDchUl

Number of RB Reconfiguration decisions (leading or not to a RB Setup/RB Reconfiguration, i.e. incremented even if CAC rejects the reconfiguration) when the reference cell is on a drift RNC. Incremented based on neighbouring RNC id. (RbPsDchDlDchUl)

Data Source

RNC C-Node

Source Field

VS.RBReconfReqNRnc.RbPsDchDlDchUl

Source Section

NeighbouringRnc

RBReconfReqNRncRbPsDchPsDch

Number of RB Reconfiguration decisions (leading or not to a RB Setup/RB Reconfiguration, i.e. incremented even if CAC rejects the reconfiguration) when the reference cell is on a drift RNC. Incremented based on neighbouring RNC id. (RbPsDchPsDch)

Data Source

RNC C-Node

Source Field

VS.RBReconfReqNRnc.RbPsDchPsDch

Source Section

NeighbouringRnc

RBReconfReqNRncRbPsDchPsHsdpa

Number of RB Reconfiguration decisions (leading or not to a RB Setup/RB Reconfiguration, i.e. incremented even if CAC rejects the reconfiguration) when the reference cell is on a drift RNC. Incremented based on neighbouring RNC id. (RbPsDchPsHsdpa)

Data Source

RNC C-Node

Source Field

VS.RBReconfReqNRnc.RbPsDchPsHsdpa

Source Section

NeighbouringRnc

RBReconfReqNRncRbPsFach

Number of RB Reconfiguration decisions (leading or not to a RB Setup/RB Reconfiguration, i.e. incremented even if CAC rejects the reconfiguration) when the reference cell is on a drift RNC. Incremented based on neighbouring RNC id. (RbPsFach)

Data Source

RNC C-Node

Source Field

VS.RBReconfReqNRnc.RbPsFach

Source Section

NeighbouringRnc

RBReconfReqNRncRbPsHsdpaDlDchEdchUl

Number of RB Reconfiguration decisions (leading or not to a RB Setup/RB Reconfiguration, i.e. incremented even if CAC rejects the reconfiguration) when the reference cell is on a drift RNC. Incremented based on neighbouring RNC id. (RbPsHsdpaDlDchEdchUl)

Data Source

RNC C-Node

Source Field

VS.RBReconfReqNRnc.RbPsHsdpaDlDchEdchUl

Source Section

NeighbouringRnc

RBReconfReqNRncRbPsHsdpaDlDchUl

Number of RB Reconfiguration decisions (leading or not to a RB Setup/RB Reconfiguration, i.e. incremented even if CAC rejects the reconfiguration) when the reference cell is on a drift RNC. Incremented based on neighbouring RNC id. (RbPsHsdpaDlDchUl)

Data Source

RNC C-Node

Source Field

VS.RBReconfReqNRnc.RbPsHsdpaDlDchUl

Source Section

NeighbouringRnc

RBReconfReqNRncRbPsHsdpaDlEdchUl

Number of RB Reconfiguration decisions (leading or not to a RB Setup/RB Reconfiguration, i.e. incremented even if CAC rejects the reconfiguration) when the reference cell is on a drift RNC. Incremented based on neighbouring RNC id. (RbPsHsdpaDlEdchUl)

Data Source

RNC C-Node

Source Field

VS.RBReconfReqNRnc.RbPsHsdpaDlEdchUl

Source Section

NeighbouringRnc

RBReconfReqNRncRbReconfOther

Number of RB Reconfiguration decisions (leading or not to a RB Setup/RB Reconfiguration, i.e. incremented even if CAC rejects the reconfiguration) when the reference cell is on a drift RNC. Incremented based on neighbouring RNC id. (RbReconfOther)

Data Source

RNC C-Node

Source Field

VS.RBReconfReqNRnc.RbReconfOther

Source Section

NeighbouringRnc

RBReconfReqNRncRbSignalling

Number of RB Reconfiguration decisions (leading or not to a RB Setup/RB Reconfiguration, i.e. incremented even if CAC rejects the reconfiguration) when the reference cell is on a drift RNC. Incremented based on neighbouring RNC id. (RbSignalling)

Data Source

RNC C-Node

Source Field

VS.RBReconfReqNRnc.RbSignalling

Source Section

NeighbouringRnc

RBSetupReqNRncPerUlBitRateDchHighBitRate

Number of Radio Bearer setup decisions (leading or not to a RB Setup, I.e., incremented even if CAC rejects the setup) when reference cell is on a drift RNC. This counter is pegged per UL RB Set rather than per procedure meaning that it is pegged multiple times for multiple RB to be setup in the same procedure. This counter is only applicable to PS radio bearers (CS radio bearers could be monitored using the corresponding counters per DlBitRate). (DchHighBitRate)

Data Source

RNC C-Node

Source Field

VS.RBSetupReqNRncPerUlBitRate.DchHighBitRate

Source Section

NeighbouringRnc

RBSetupReqNRncPerUlBitRateDchLowBitRate

Number of Radio Bearer setup decisions (leading or not to a RB Setup, I.e., incremented even if CAC rejects the setup) when reference cell is on a drift RNC. This counter is pegged per UL RB Set rather than per procedure meaning that it is pegged multiple times for multiple RB to be setup in the same procedure. This counter is only applicable to PS radio bearers (CS radio bearers could be monitored using the corresponding counters per DlBitRate). (DchLowBitRate)

Data Source

RNC C-Node

Source Field

VS.RBSetupReqNRncPerUlBitRate.DchLowBitRate

Source Section

NeighbouringRnc

RBSetupReqNRncPerUlBitRateEdch

Number of Radio Bearer setup decisions (leading or not to a RB Setup, I.e., incremented even if CAC rejects the setup) when reference cell is on a drift RNC. This counter is pegged per UL RB Set rather than per procedure meaning that it is pegged multiple times for multiple RB to be setup in the same procedure. This counter is only applicable to PS radio bearers (CS radio bearers could be monitored using the corresponding counters per DlBitRate). (Edch)

Data Source

RNC C-Node

Source Field

VS.RBSetupReqNRncPerUlBitRate.Edch

Source Section

NeighbouringRnc

RBSetupReqNRncPerUlBitRateOther

Number of Radio Bearer setup decisions (leading or not to a RB Setup, I.e., incremented even if CAC rejects the setup) when reference cell is on a drift RNC. This counter is pegged per UL RB Set rather than per procedure meaning that it is pegged multiple times for multiple RB to be setup in the same procedure. This counter is only applicable to PS radio bearers (CS radio bearers could be monitored using the corresponding counters per DlBitRate). (Other)

Data Source

RNC C-Node

Source Field

VS.RBSetupReqNRncPerUlBitRate.Other

Source Section

NeighbouringRnc

RBSetupReqNRncTgtCallCsData

Number of Radio Bearer setup decisions (leading or not to a RB Setup, I.e., incremented even if CAC rejects the setup) when the reference cell is on a drift RNC. The counter should be pegged multiple times for multiple RB to be setup in the same procedure. Incremented based on the drift RNC id. (TgtCallCsData)

Data Source

RNC C-Node

Source Field

VS.RBSetupReqNRnc.TgtCallCsData

Source Section

NeighbouringRnc

RBSetupReqNRncTgtCallCsSpeechNbLrAmr

Number of Radio Bearer setup decisions (leading or not to a RB Setup, I.e., incremented even if CAC rejects the setup) when the reference cell is on a drift RNC. The counter should be pegged multiple times for multiple RB to be setup in the same procedure. Incremented based on the drift RNC id. (TgtCallCsSpeechNbLrAmr)

Data Source

RNC C-Node

Source Field

VS.RBSetupReqNRnc.TgtCallCsSpeechNbLrAmr

Source Section

NeighbouringRnc

RBSetupReqNRncTgtCallCsSpeechWbAmr

Number of Radio Bearer setup decisions (leading or not to a RB Setup, I.e., incremented even if CAC rejects the setup) when the reference cell is on a drift RNC. The counter should be pegged multiple times for multiple RB to be setup in the same procedure. Incremented based on the drift RNC id. (TgtCallCsSpeechWbAmr)

Data Source

RNC C-Node

Source Field

VS.RBSetupReqNRnc.TgtCallCsSpeechWbAmr

Source Section

NeighbouringRnc

RBSetupReqNRncTgtCallCsStr

Number of Radio Bearer setup decisions (leading or not to a RB Setup, I.e., incremented even if CAC rejects the setup) when the reference cell is on a drift RNC. The counter should be pegged multiple times for multiple RB to be setup in the same procedure. Incremented based on the drift RNC id. (TgtCallCsStr)

Data Source

RNC C-Node

Source Field

VS.RBSetupReqNRnc.TgtCallCsStr

Source Section

NeighbouringRnc

RBSetupReqNRncTgtCallHsdpaEdch

Number of Radio Bearer setup decisions (leading or not to a RB Setup, I.e., incremented even if CAC rejects the setup) when the reference cell is on a drift RNC. The counter should be pegged multiple times for multiple RB to be setup in the same procedure. Incremented based on the drift RNC id. (TgtCallHsdpaEdch)

Data Source

RNC C-Node

Source Field

VS.RBSetupReqNRnc.TgtCallHsdpaEdch

Source Section

NeighbouringRnc

RBSetupReqNRncTgtCallHsdpaR99

Number of Radio Bearer setup decisions (leading or not to a RB Setup, I.e., incremented even if CAC rejects the setup) when the reference cell is on a drift RNC. The counter should be pegged

multiple times for multiple RB to be setup in the same procedure. Incremented based on the drift RNC id. (TgtCallHsdpaR99)

Data Source

RNC C-Node

Source Field

VS.RBSetupReqNRnc.TgtCallHsdpaR99

Source Section

NeighbouringRnc

RBSetupReqNRncTgtCallOther

Number of Radio Bearer setup decisions (leading or not to a RB Setup, I.e., incremented even if CAC rejects the setup) when the reference cell is on a drift RNC. The counter should be pegged multiple times for multiple RB to be setup in the same procedure. Incremented based on the drift RNC id. (TgtCallOther)

Data Source

RNC C-Node

Source Field

VS.RBSetupReqNRnc.TgtCallOther

Source Section

NeighbouringRnc

RBSetupReqNRncTgtCallPsIb128

Number of Radio Bearer setup decisions (leading or not to a RB Setup, I.e., incremented even if CAC rejects the setup) when the reference cell is on a drift RNC. The counter should be pegged multiple times for multiple RB to be setup in the same procedure. Incremented based on the drift RNC id. (TgtCallPsIb128)

Data Source

RNC C-Node

Source Field

VS.RBSetupReqNRnc.TgtCallPsIb128

Source Section

NeighbouringRnc

RBSetupReqNRncTgtCallPsIb256

Number of Radio Bearer setup decisions (leading or not to a RB Setup, I.e., incremented even if CAC rejects the setup) when the reference cell is on a drift RNC. The counter should be pegged multiple times for multiple RB to be setup in the same procedure. Incremented based on the drift RNC id. (TgtCallPsIb256)

Data Source

RNC C-Node

Source Field

VS.RBSetupReqNRnc.TgtCallPsIb256

Source Section

NeighbouringRnc

RBSetupReqNRncTgtCallPsIb384

Number of Radio Bearer setup decisions (leading or not to a RB Setup, I.e., incremented even if CAC rejects the setup) when the reference cell is on a drift RNC. The counter should be pegged multiple times for multiple RB to be setup in the same procedure. Incremented based on the drift RNC id. (TgtCallPsIb384)

Data Source

RNC C-Node

Source Field

VS.RBSetupReqNRnc.TgtCallPsIb384

Source Section

NeighbouringRnc

RBSetupReqNRncTgtCallPsIb64

Number of Radio Bearer setup decisions (leading or not to a RB Setup, I.e., incremented even if CAC rejects the setup) when the reference cell is on a drift RNC. The counter should be pegged multiple times for multiple RB to be setup in the same procedure. Incremented based on the drift RNC id. (TgtCallPsIb64)

Data Source

RNC C-Node

Source Field

VS.RBSetupReqNRnc.TgtCallPsIb64

Source Section

NeighbouringRnc

RBSetupReqNRncTgtCallPsIbLt64

Number of Radio Bearer setup decisions (leading or not to a RB Setup, I.e., incremented even if CAC rejects the setup) when the reference cell is on a drift RNC. The counter should be pegged multiple times for multiple RB to be setup in the same procedure. Incremented based on the drift RNC id. (TgtCallPsIbLt64)

Data Source

RNC C-Node

Source Field

VS.RBSetupReqNRnc.TgtCallPsIbLt64

Source Section

NeighbouringRnc

RBSetupReqNRncTgtCallPsStr128

Number of Radio Bearer setup decisions (leading or not to a RB Setup, I.e., incremented even if CAC rejects the setup) when the reference cell is on a drift RNC. The counter should be pegged multiple times for multiple RB to be setup in the same procedure. Incremented based on the drift RNC id. (TgtCallPsStr128)

Data Source

RNC C-Node

Source Field

VS.RBSetupReqNRnc.TgtCallPsStr128

Source Section

NeighbouringRnc

RBSetupReqNRncTgtCallPsStr256

Number of Radio Bearer setup decisions (leading or not to a RB Setup, I.e., incremented even if CAC rejects the setup) when the reference cell is on a drift RNC. The counter should be pegged multiple times for multiple RB to be setup in the same procedure. Incremented based on the drift RNC id. (TgtCallPsStr256)

Data Source

RNC C-Node

Source Field

VS.RBSetupReqNRnc.TgtCallPsStr256

Source Section

NeighbouringRnc

RBSetupReqNRncTgtCallPsStr384

Number of Radio Bearer setup decisions (leading or not to a RB Setup, I.e., incremented even if CAC rejects the setup) when the reference cell is on a drift RNC. The counter should be pegged multiple times for multiple RB to be setup in the same procedure. Incremented based on the drift RNC id. (TgtCallPsStr384)

Data Source

RNC C-Node

Source Field

VS.RBSetupReqNRnc.TgtCallPsStr384

Source Section

NeighbouringRnc

RBSetupReqNRncTgtCallPsStr64

Number of Radio Bearer setup decisions (leading or not to a RB Setup, I.e., incremented even if CAC rejects the setup) when the reference cell is on a drift RNC. The counter should be pegged multiple times for multiple RB to be setup in the same procedure. Incremented based on the drift RNC id. (TgtCallPsStr64)

Data Source

RNC C-Node

Source Field

VS.RBSetupReqNRnc.TgtCallPsStr64

Source Section

NeighbouringRnc

RBSetupReqNRncTgtCallPsStrLt64

Number of Radio Bearer setup decisions (leading or not to a RB Setup, I.e., incremented even if CAC rejects the setup) when the reference cell is on a drift RNC. The counter should be pegged multiple times for multiple RB to be setup in the same procedure. Incremented based on the drift RNC id. (TgtCallPsStrLt64)

Data Source

RNC C-Node

Source Field

VS.RBSetupReqNRnc.TgtCallPsStrLt64

Source Section

NeighbouringRnc

RBSetupSuccNRncPerUlBitRateDchHighBitRate

Number of Radio Bearer successfully setup (from serving iRNC) when the reference Cell of the call belongs to a drift RNC. This counter is pegged per UL RB Set rather than per procedure meaning that it is pegged multiple times for multiple RB successfully setup in the same procedure. This counter is only applicable to PS radio bearers (CS radio bearers could be monitored using the corresponding counters per DlBitRate). (DchHighBitRate)

Data Source

RNC C-Node

Source Field

VS.RBSetupSuccNRncPerUlBitRate.DchHighBitRate

Source Section

NeighbouringRnc

RBSetupSuccNRncPerUlBitRateDchLowBitRate

Number of Radio Bearer successfully setup (from serving iRNC) when the reference Cell of the call belongs to a drift RNC. This counter is pegged per UL RB Set rather than per procedure

meaning that it is pegged multiple times for multiple RB successfully setup in the same procedure. This counter is only applicable to PS radio bearers (CS radio bearers could be monitored using the corresponding counters per DlBitRate). (DchLowBitRate)

Data Source

RNC C-Node

Source Field

VS.RBSetupSuccNRncPerUlBitRate.DchLowBitRate

Source Section

NeighbouringRnc

RBSetupSuccNRncPerUlBitRateEdch

Number of Radio Bearer successfully setup (from serving iRNC) when the reference Cell of the call belongs to a drift RNC. This counter is pegged per UL RB Set rather than per procedure meaning that it is pegged multiple times for multiple RB successfully setup in the same procedure. This counter is only applicable to PS radio bearers (CS radio bearers could be monitored using the corresponding counters per DlBitRate). (Edch)

Data Source

RNC C-Node

Source Field

VS.RBSetupSuccNRncPerUlBitRate.Edch

Source Section

NeighbouringRnc

RBSetupSuccNRncPerUlBitRateOther

Number of Radio Bearer successfully setup (from serving iRNC) when the reference Cell of the call belongs to a drift RNC. This counter is pegged per UL RB Set rather than per procedure meaning that it is pegged multiple times for multiple RB successfully setup in the same procedure. This counter is only applicable to PS radio bearers (CS radio bearers could be monitored using the corresponding counters per DlBitRate). (Other)

Data Source

RNC C-Node

Source Field

VS.RBSetupSuccNRncPerUlBitRate.Other

Source Section

NeighbouringRnc

ReconfAtt_0kbps_DCH

Reconfiguration Attempts due to Traffic Activity : 0kbps to DCH/DCH

Data Source

RNC

Source Field

VS.ReconfAtt.0kbps_DCH

Source Section

RncFunction

ReconfAtt_0kbps_HSDSCH

Reconfiguration Attempts due to Traffic Activity : 0kbps to HS-DSCH/DCH

Data Source

RNC

Source Field

VS.ReconfAtt.0kbps_HSDSCH

Source Section

RncFunction

ReconfAtt_DCH_HSDSCH

Total Number of Reconfiguration Attempts: DCH to HS-DSCH

Data Source

RNC

Source Field

VS.ReconfAtt.DCH_HSDSCH

Source Section

RncFunction

ReconfFail_DCH_HSDSCH_causeDBC

Number of Failed Reconfiguration Attempts: DCH to HS-DSCH due to DBC

Data Source

RNC

Source Field

VS.ReconfFail.DCH_HSDSCH.causeDBC

Source Section

RncFunction

ReconfFail_DCH_HSDSCH_sum

Total Number of Failed Reconfiguration: DCH to HS-DSCH

Data Source

RNC

Source Field

VS.ReconfFail.DCH_HSDSCH.sum

Source Section

RncFunction

ReconfSucc_0kbps_DCH

Reconfiguration Success due to Traffic Activity: 0kbps to DCH/DCH

Data Source

RNC

Source Field

VS.ReconfSucc.0kbps_DCH

Source Section

RncFunction

ReconfSucc_0kbps_HSDSCH

Reconfiguration Success due to Traffic Activity: 0kbps to HS-DSCH/DCH

Data Source

RNC

Source Field

VS.ReconfSucc.0kbps_HSDSCH

Source Section

RncFunction

ReconfSucc0kbpsDCHNeighbRnc

Reconfiguration Success due to Traffic Activity: 0kbps to DCH/DCH (NeighbRnc)

Data Source

RNC C-Node

Source Field

VS.ReconfSucc.0kbps.DCH.NeighbRnc

Source Section

NeighbouringRnc

ReconfSucc0kbpsHSDSCHNeighbRnc

Reconfiguration Success due to Traffic Activity: 0kbps to HSDSCH/DCH (NeighbRnc)

Data Source

RNC C-Node

Source Field

VS.ReconfSucc.0kbps.HSDSCH.NeighbRnc

Source Section

NeighbouringRnc

RELOC_AttCS_UEInvol

Attempted relocations with UE involved for CS domain

Data Source

RNC

Source Field

RELOC.AttCS.UEInvol

Source Section

RncFunction

RELOC_AttPrepUEInvolCS

Attempted relocation preparations with UE involved for CS domain

Data Source

RNC

Source Field

RELOC.AttPrepUEInvolCS

Source Section

RncFunction

RELOC_AttPrepUEInvolPS

Attempted relocation preparations with UE involved for PS domain

Data Source

RNC

Source Field

RELOC.AttPrepUEInvolPS

Source Section

RncFunction

RELOC_AttPS_UEInvol

Attempted relocations with UE involved for PS domain

Data Source

RNC

Source Field

RELOC.AttPS.UEInvol

Source Section

RncFunction

RELOC_FailCS_UEInvol

Failed relocations with UE involved for CS domain

Data Source

RNC

Source Field

RELOC.FailCS.UEInvol

Source Section

RncFunction

RELOC_FailPrepUEInvolCS_AbstSyntErr

Failed relocation preparations with UE involved for CS domain. Cause: Abstract Syntax Error (Reject) (100)

Data Source

RNC

Source Field

RELOC.FailPrepUEInvolCS.AbstSyntErr

Source Section

RncFunction

RELOC_FailPrepUEInvolCS_FailTarSys

Failed relocation preparations with UE involved for CS domain. Cause: Relocation Failure in Target CN/RNC or Target system (29)

Data Source

RNC

Source Field

RELOC.FailPrepUEInvolCS.FailTarSys

Source Section

RncFunction

RELOC_FailPrepUEInvolCS_Interaction

Failed relocation preparations with UE involved for CS domain. Cause: Interaction With Other Procedure (32)

Data Source

RNC

Source Field

RELOC.FailPrepUEInvolCS.Interaction

Source Section

RncFunction

RELOC_FailPrepUEInvolCS_NoResAv

Failed relocation preparations with UE involved for CS domain. Cause: No Resource Available (114)

Data Source

RNC

Source Field

RELOC.FailPrepUEInvolCS.NoResAv

Source Section

RncFunction

RELOC_FailPrepUEInvolCS_NoRRTarCell

Failed relocation preparations with UE involved for CS domain. Cause: No Radio Resources Available in Target Cell (53)

Data Source

RNC

Source Field

RELOC.FailPrepUEInvolCS.NoRRTarCell

Source Section

RncFunction

RELOC_FailPrepUEInvolCS_NotSupTarSys

Failed relocation preparations with UE involved for CS domain. Cause: Relocation not supported in Target RNC or Target system (44)

Data Source

RNC

Source Field

RELOC.FailPrepUEInvolCS.NotSupTarSys

Source Section

RncFunction

RELOC_FailPrepUEInvolCS_OmInt

Failed relocation preparations with UE involved for CS domain. Cause: O&M Intervention (113)

Data Source

RNC

Source Field

RELOC.FailPrepUEInvolCS.OmInt

Source Section

RncFunction

RELOC_FailPrepUEInvolCS_RelocCanc

Failed relocation preparations with UE involved for CS domain. Cause: Relocation Cancelled (10)

Data Source

RNC

Source Field

RELOC.FailPrepUEInvolCS.RelocCanc

Source Section

RncFunction

RELOC_FailPrepUEInvolCS_ReqCiphNotSupp

Failed relocation preparations with UE involved for CS domain. Cause: Requested Ciphering and/or Integrity Protection Algorithms not Supported (12)

Data Source

RNC

Source Field

RELOC.FailPrepUEInvolCS.ReqCiphNotSupp

Source Section

RncFunction

RELOC_FailPrepUEInvolCS_sum

Failed relocation preparations with UE involved for CS domain. Sum of all causes

Data Source

RNC

Source Field

RELOC.FailPrepUEInvolCS.sum

Source Section

RncFunction

RELOC_FailPrepUEInvolCS_T_RELOCalloc_exp

Failed relocation preparations with UE involved for CS domain. Cause: TRELOCalloc Expiry (4)

Data Source

RNC

Source Field

RELOC.FailPrepUEInvolCS.T_RELOCalloc_exp

Source Section

RncFunction

RELOC_FailPrepUEInvolCS_T_RELOCprep_exp

Failed relocation preparations with UE involved for CS domain. Cause: T_RELOCprep expiry

Data Source

RNC

Source Field

RELOC.FailPrepUEInvolCS.T_RELOCprep_exp

Source Section

RncFunction

RELOC_FailPrepUEInvolCS_TarNotAllowed

Failed relocation preparations with UE involved for CS domain. Cause: Relocation Target not allowed (50)

Data Source

RNC

Source Field

RELOC.FailPrepUEInvolCS.TarNotAllowed

Source Section

RncFunction

RELOC_FailPrepUEInvolCS_TrLdHighTarCell

Failed relocation preparations with UE involved for CS domain. Cause: Traffic Load In The Target Cell Higher Than In The Source Cell (57)

Data Source

RNC

Source Field

RELOC.FailPrepUEInvolCS.TrLdHighTarCell

Source Section

RncFunction

RELOC_FailPrepUEInvolCS_UnknownTRNC

Failed relocation preparations with UE involved for CS domain. Cause: Unknown Target RNC (9)

Data Source

RNC

Source Field

RELOC.FailPrepUEInvolCS.UnknownTRNC

Source Section

RncFunction

RELOC_FailPrepUEInvolCS_UnspecFail

Failed relocation preparations with UE involved for CS domain. Cause: Unspecified Failure (115)

Data Source

RNC

Source Field

RELOC.FailPrepUEInvolCS.UnspecFail

Source Section

RncFunction

RELOC_FailPrepUEInvolPS_AbstSyntErr

Failed relocation preparations with UE involved for PS domain. Cause: Abstract Syntax Error (Reject) (100)

Data Source

RNC

Source Field

RELOC.FailPrepUEInvolPS.AbstSyntErr

Source Section

RncFunction

RELOC_FailPrepUEInvolPS_FailTarSys

Failed relocation preparations with UE involved for PS domain. Cause: Relocation Failure in Target CN/RNC or Target system (29)

Data Source

RNC

Source Field

RELOC.FailPrepUEInvolPS.FailTarSys

Source Section

RncFunction

RELOC_FailPrepUEInvolPS_Interaction

Failed relocation preparations with UE involved for PS domain. Cause: Interaction With Other Procedure (32)

Data Source

RNC

Source Field

RELOC.FailPrepUEInvolPS.Interaction

Source Section

RncFunction

RELOC_FailPrepUEInvolPS_NoResAv

Failed relocation preparations with UE involved for PS domain. Cause: No Resource Available (114)

Data Source

RNC

Source Field

RELOC.FailPrepUEInvolPS.NoResAv

Source Section

RncFunction

RELOC_FailPrepUEInvolPS_NoRRTarCell

Failed relocation preparations with UE involved for PS domain. Cause: No Radio Resources Available in Target Cell (53)

Data Source

RNC

Source Field

RELOC.FailPrepUEInvolPS.NoRRTarCell

Source Section

RncFunction

RELOC_FailPrepUEInvolPS_NotSupTarSys

Failed relocation preparations with UE involved for PS domain. Cause: not supported in Target RNC or Target system (44)

Data Source

RNC

Source Field

RELOC.FailPrepUEInvolPS.NotSupTarSys

Source Section

RncFunction

RELOC_FailPrepUEInvolPS_OmInt

Failed relocation preparations with UE involved for PS domain. Cause: O&M Intervention (113)

Data Source

RNC

Source Field

RELOC.FailPrepUEInvolPS.OmInt

Source Section

RncFunction

RELOC_FailPrepUEInvolPS_RelocCanc

Failed relocation preparations with UE involved for PS domain. Cause: Relocation Cancelled (10)

Data Source

RNC

Source Field

RELOC.FailPrepUEInvolPS.RelocCanc

Source Section

RncFunction

RELOC_FailPrepUEInvolPS_ReqCiphNotSupp

Failed relocation preparations with UE involved for PS domain. Cause: Requested Ciphering and/or Integrity Protection Algorithms not Supported (12)

Data Source

RNC

Source Field

RELOC.FailPrepUEInvolPS.ReqCiphNotSupp

Source Section

RncFunction

RELOC_FailPrepUEInvolPS_sum

Failed relocation preparations with UE involved for PS domain. Sum of all causes

Data Source

RNC

Source Field

RELOC.FailPrepUEInvolPS.sum

Source Section

RncFunction

RELOC_FailPrepUEInvolPS_T_RELOCalloc_exp

Failed relocation preparations with UE involved for PS domain. Cause: TRELOCalloc Expiry (4)

Data Source

RNC

Source Field

RELOC.FailPrepUEInvolPS.T_RELOCalloc_exp

Source Section

RncFunction

RELOC_FailPrepUEInvolPS_T_RELOCprep_exp

Failed relocation preparations with UE involved for PS domain. Cause: T_RELOCprep Expiry

Data Source

RNC

Source Field

RELOC.FailPrepUEInvolPS.T_RELOCprep_exp

Source Section

RncFunction

RELOC_FailPrepUEInvolPS_TarNotAllowed

Failed relocation preparations with UE involved for PS domain. Cause: Relocation Target not allowed (50)

Data Source

RNC

Source Field

RELOC.FailPrepUEInvolPS.TarNotAllowed

Source Section

RncFunction

RELOC_FailPrepUEInvolPS_TrLdHighTarCell

Failed relocation preparations with UE involved for PS domain. Cause: Traffic Load In The Target Cell Higher Than In The Source Cell (57)

Data Source

RNC

Source Field

RELOC.FailPrepUEInvolPS.TrLdHighTarCell

Source Section

RncFunction

RELOC_FailPrepUEInvolPS_UnknownTRNC

Failed relocation preparations with UE involved for PS domain. Cause: Unknown Target RNC (9)

Data Source

RNC

Source Field

RELOC.FailPrepUEInvolPS.UnknownTRNC

Source Section

RncFunction

RELOC_FailPrepUEInvolPS_UnspecFail

Failed relocation preparations with UE involved for PS domain. Cause: Unspecified Failure (115)

Data Source

RNC

Source Field

RELOC.FailPrepUEInvolPS.UnspecFail

Source Section

RncFunction

RELOC_FailPS_UEInvol

Failed relocations with UE involved for PS domain

Data Source

RNC

Source Field

RELOC.FailPS.UEInvol

Source Section

RncFunction

RELOC_SuccCS_UEInvol

Successful relocations with UE involved for CS domain

Data Source

RNC

Source Field

RELOC.SuccCS.UEInvol

Source Section

RncFunction

RELOC_SuccPrepUEInvolCS

Successful relocation preparations with UE involved for CS domain

Data Source

RNC

Source Field

RELOC.SuccPrepUEInvolCS

Source Section

RncFunction

RELOC_SuccPrepUEInvolPS

Successful relocation preparations with UE involved for PS domain

Data Source

RNC

Source Field

RELOC.SuccPrepUEInvolPS

Source Section

RncFunction

RELOC_SuccPS_UEInvol

Successful relocations with UE involved for PS domain

Data Source

RNC

Source Field

RELOC.SuccPS.UEInvol

Source Section

RncFunction

RELOCAttCSUEInvolNeighbRnc

Attempted relocations with UE involved for CS domain - indicating CS only and CS&PS combined relocation attempts with reference cell on DRNC. (NeighbRnc)

Data Source

RNC C-Node

Source Field

RELOC.AttCS.UEInvol.NeighbRnc

Source Section

NeighbouringRnc

RELOCAttPrepCSNeighbRncUeInvol

Attempted relocation preparations in context SRNS relocation for CS domain (NeighbRnc.UeInvol)

Data Source

RNC C-Node

Source Field

RELOC.AttPrepCS.NeighbRnc.UeInvol

Source Section

NeighbouringRnc

RELOCAttPrepCSNeighbRncUeNotInvol

Attempted relocation preparations in context SRNS relocation for CS domain (NeighbRnc.UeNotInvol)

Data Source

RNC C-Node

Source Field

RELOC.AttPrepCS.NeighbRnc.UeNotInvol

Source Section

NeighbouringRnc

RELOCAttPrepPSNeighbRncUeInvol

Attempted relocation preparations in context SRNS relocation for PS domain (NeighbRnc.UeInvol)

Data Source

RNC C-Node

Source Field

RELOC.AttPrepPS.NeighbRnc.UeInvol

Source Section

NeighbouringRnc

RELOCAttPrepPSNeighbRncUeNotInvol

Attempted relocation preparations in context SRNS relocation for PS domain (NeighbRnc.UeNotInvol)

Data Source

RNC C-Node

Source Field

RELOC.AttPrepPS.NeighbRnc.UeNotInvol

Source Section

NeighbouringRnc

RELOCAttPSUEInvolNeighbRnc

Attempted relocations with UE involved for PS domain - indicating PS only and CS&PS combined relocation attempts with reference cell on DRNC. (NeighbRnc)

Data Source

RNC C-Node

Source Field

RELOC.AttPS.UEInvol.NeighbRnc

Source Section

NeighbouringRnc

RELOCCancelPrepCSCallRelNeighbRncUeInvol

Cancelled CS SRNS Relocation Preparations indicating normal call termination in context SRNS relocation (UeInvol)

Data Source

RNC C-Node

Source Field

VS.RELOC.CancelPrepCS.CallRel.NeighbRnc.UeInvol

Source Section

NeighbouringRnc

RELOCCancelPrepCSCallRelNeighbRncUeNotInvol

Cancelled CS SRNS Relocation Preparations indicating normal call termination in context SRNS relocation (UeNotInvol)

Data Source

RNC C-Node

Source Field

VS.RELOC.CancelPrepCS.CallRel.NeighbRnc.UeNotInvol

Source Section

NeighbouringRnc

RELOCCancelPrepPSCallRelNeighbRncUeInvol

Cancelled PS SRNS Relocation Preparations indicating normal call termination in context SRNS relocation (UeInvol)

Data Source

RNC C-Node

Source Field

VS.RELOC.CancelPrepPS.CallRel.NeighbRnc.UeInvol

Source Section

NeighbouringRnc

RELOCCancelPrepPSCallRelNeighbRncUeNotInvol

Cancelled PS SRNS Relocation Preparations indicating normal call termination in context SRNS relocation (UeNotInvol)

Data Source

RNC C-Node

Source Field

VS.RELOC.CancelPrepPS.CallRel.NeighbRnc.UeNotInvol

Source Section

NeighbouringRnc

RELOCSuccCSUEInvolNeighbRncNormalRel

Successful relocations with UE involved for CS domain (NeighbRnc.NormalRel)

Data Source

RNC C-Node

Source Field

RELOC.SuccCS.UEInvol.NeighbRnc.NormalRel

Source Section

NeighbouringRnc

RELOCSuccCSUEInvolNeighbRncSuccReloc

Successful relocations with UE involved for CS domain (NeighbRnc.SuccReloc)

Data Source

RNC C-Node

Source Field

RELOC.SuccCS.UEInvol.NeighbRnc.SuccReloc

Source Section

NeighbouringRnc

RELOCSuccPSUEInvolNeighbRncNormalRel

Successful relocations with UE involved for PS domain (NeighbRnc.NormalRel)

Data Source

RNC C-Node

Source Field

RELOC.SuccPS.UEInvol.NeighbRnc.NormalRel

Source Section

NeighbouringRnc

RELOCSuccPSUEInvolNeighbRncSuccReloc

Successful relocations with UE involved for PS domain (NeighbRnc.SuccReloc)

Data Source

RNC C-Node

Source Field

RELOC.SuccPS.UEInvol.NeighbRnc.SuccReloc

Source Section

NeighbouringRnc

RLM_AttRLAddIur

Attempted Radio Link Additions on Iur (UTRAN side)

Data Source

RNC

Source Field

RLM.AttRLAddIur

Source Section

Radio Link Addition: Attempts, Successes and Failures (UTRAN side)

RLM_AttRLReconfig

Number of RL Reconfiguration Attempts

Data Source

RNC

Source Field

VS.RLM.AttRLReconfig

Source Section

Radio Link Reconfiguration

RLM_AttRLSetupIur

Attempted Radio Link Setups on Iur (UTRAN side)

Data Source

RNC

Source Field

RLM.AttRLSetupIur

Source Section

Radio Link Set-up: Attempts, Successes and Failures (UTRAN side)

RLM_DropRL_ULRLFLossSync

Number of Dropped Radio Links caused by Uplink Radio Link Failure - Loss of synchronisation

Data Source

RNC

Source Field

VS.RLM.DropRL.ULRLFLossSync

Source Section

Radio Link Failure

RLM_DropRL_ULRLFNoLossSync

Number of Dropped Radio Links caused by Uplink Radio Link Failure - other than Loss of synchronisation

Data Source

RNC

Source Field

VS.RLM.DropRL.ULRLFNoLossSync

Source Section

Radio Link Failure

RLM_FailRLAddIur_sum

Failed Radio Link Addition Attempts on Iur (UTRAN side) due to all causes

Data Source

RNC

Source Field

RLM.FailRLAddIur.sum

Source Section

Radio Link Addition: Attempts, Successes and Failures (UTRAN side)

RLM_FailRLAddIur_TransRes

Failed Radio Link Addition Attempts on Iur (UTRAN side) due to Transmission Resources

Data Source

RNC

Source Field

RLM.FailRLAddIur.TransRes

Source Section

Radio Link Addition: Attempts, Successes and Failures (UTRAN side)

RLM_FailRLReconfig_DrncOther

Number of Failed Radio Link Reconfiguration Requests others than Lack of DRNC Resource

Data Source

RNC

Source Field

VS.RLM.FailRLReconfig.DrncOther

Source Section

Radio Link Reconfiguration

RLM_FailRLReconfig_DrncRes

Number of Failed Radio Link Reconfiguration Requests due to No DRNC Resource

Data Source

RNC

Source Field

VS.RLM.FailRLReconfig.DrncRes

Source Section

Radio Link Reconfiguration

RLM_FailRLReconfig_sum

Number of Failed Radio Link Reconfiguration Requests

Data Source

RNC

Source Field

VS.RLM.FailRLReconfig.sum

Source Section

Radio Link Reconfiguration

RLM_FailRLReconfig_Timeout

Number of Failed Radio Link Reconfiguration Requests due to Timeout

Data Source

RNC

Source Field

VS.RLM.FailRLReconfig.Timeout

Source Section

Radio Link Reconfiguration

RLM_FailRLSetupIur_sum

Failed Radio Link Setup Attempts on Iur (UTRAN side) due to all causes

Data Source

RNC

Source Field

RLM.FailRLSetupIur.sum

Source Section

Radio Link Set-up: Attempts, Successes and Failures (UTRAN side)

RLM_FailRLSetupIur_TransRes

Failed Radio Link Setup Attempts on Iur (UTRAN side) due to Transmission Resources

Data Source

RNC

Source Field

RLM.FailRLSetupIur.TransRes

Source Section

Radio Link Set-up: Attempts, Successes and Failures (UTRAN side)

RRC_AttConnRel_Drop_CallSetup

Standalone SRB Dropped RRC Connection Establishments

Data Source

RNC

Source Field

VS.RRC.AttConnRel.Drop.CallSetup

Source Section

Dropped RRC Connections

RRC_AttConnRel_Drop_UESigConnRel

Number of Dropped RRC Connections due to a release of the signalling connection by the UE

Data Source

RNC

Source Field

VS.RRC.AttConnRel.Drop.UESigConnRel

Source Section

Dropped RRC Connections

RRC_AttConnRel_Drop_ULRLF

Number of Dropped RRC Connections caused by Uplink Radio Link Failure due to loss of synchronisation

Data Source

RNC

Source Field

VS.RRC.AttConnRel.Drop.ULRLF

Source Section

Dropped RRC Connections

RRC_RBReconfigAtt

Radio Bearer Reconfiguration Attempts

Data Source

RNC

Source Field

VS.RRC.RBReconfigAtt

Source Section

Radio Bearer Setup and Radio Bearer Reconfiguration Counter

RRC_RBReconfigSucc

Radio Bearer Reconfiguration Success

Data Source

RNC

Source Field

VS.RRC.RBReconfigSucc

Source Section

Radio Bearer Setup and Radio Bearer Reconfiguration Counter

RRC_RBSetupAtt

Attempted Radio Bearer Set-up

Data Source

RNC

Source Field

VS.RRC.RBSetupAtt

Source Section

Radio Bearer Setup and Radio Bearer Reconfiguration Counter

RRC_RBSetupSucc

Successful Radio Bearer Set-up

Data Source

RNC

Source Field

VS.RRC.RBSetupSucc

Source Section

Radio Bearer Setup and Radio Bearer Reconfiguration Counter

RRC_TransChanReconfigAtt

Transport Channel Reconfiguration Attempts

Data Source

RNC

Source Field

VS.RRC.TransChanReconfigAtt

Source Section

Radio Bearer Setup and Radio Bearer Reconfiguration Counter

RRC_TransChanReconfigSucc

Transport Channel Reconfiguration Success

Data Source

RNC

Source Field

VS.RRC.TransChanReconfigSucc

Source Section

Radio Bearer Setup and Radio Bearer Reconfiguration Counter

RrcActiveSetUpdateSuccessNeighbRncRadioLinkAdditionOnCell

Number of successful RRC ACTIVE SET UPDATE on any cell of the active set belonging to a neighbouring RNC (RadioLinkAdditionOnCell)

Data Source

RNC C-Node

Source Field

VS.RrcActiveSetUpdateSuccessNeighbRnc.RadioLinkAdditionOnCell

Source Section

NeighbouringRnc

RrcActiveSetUpdateSuccessNeighbRncRadioLinkRemovalOfCell

Number of successful RRC ACTIVE SET UPDATE on any cell of the active set belonging to a neighbouring RNC (RadioLinkRemovalOfCell)

Data Source

RNC C-Node

Source Field

VS.RrcActiveSetUpdateSuccessNeighbRnc.RadioLinkRemovalOfCell

Source Section

NeighbouringRnc

RrcActiveSetUpdateUnsuccessNeighbRncRrcActiveSetUpdateFailure

Number of unsuccessful RRC ACTIVE SET UPDATE on any cell of the active set belonging to a neighbouring RNC (RrcActiveSetUpdateFailure)

Data Source

RNC C-Node

Source Field

VS.RrcActiveSetUpdateUnsuccessNeighbRnc.RrcActiveSetUpdateFailure

Source Section

NeighbouringRnc

RrcActiveSetUpdateUnsuccessNeighbRncTimeout

Number of unsuccessful RRC ACTIVE SET UPDATE on any cell of the active set belonging to a neighbouring RNC (Timeout)

Data Source

RNC C-Node

Source Field

VS.RrcActiveSetUpdateUnsuccessNeighbRnc.Timeout

Source Section

NeighbouringRnc

RrcCellChangeFromUtranTrigByUeTxPowerMaxNRnc

Number of 3G 2G PS handovers with a reference cell for which the RNC is drift and the handover has been initiated because of UE Tx Power Max Alarm criterion hit (RrcCellChangeFromUtranTrigByUeTxPowerMaxNRnc)

Data Source

RNC C-Node

Source Field

VS.RrcCellChangeFromUtranTrigByUeTxPowerMaxNRnc

Source Section

NeighbouringRnc

RrcCellChangeOrderFailureNeighbRncNoRsrcCacFailure

Number of Inter Rat Cell Change Order failure received by RNC with a reference cell for which the iRNC is drift. This is in the scope of 3G to 2G handover, PS only (NoRsrcCacFailure)

Data Source

RNC C-Node

Source Field

VS.RrcCellChangeOrderFailureNeighbRnc.NoRsrcCacFailure

Source Section

NeighbouringRnc

RrcCellChangeOrderFailureNeighbRncRescuePs

Number of Inter Rat Cell Change Order failure received by RNC with a reference cell for which the iRNC is drift. This is in the scope of 3G to 2G handover, PS only (RescuePs)

Data Source

RNC C-Node

Source Field

VS.RrcCellChangeOrderFailureNeighbRnc.RescuePs

Source Section

NeighbouringRnc

RrcCellChgOrderUtranCmdTrigEcNoNRnc

Number of Inter-RAT Cell Change Order from Utran messages sent by RNC with a reference cell on a drift RNC and the handover has been initiated because of Ec/No. (RrcCellChgOrderUtranCmdTrigEcNoNRnc)

Data Source

RNC C-Node

Source Field

VS.RrcCellChgOrderUtranCmdTrigEcNoNRnc

Source Section

NeighbouringRnc

RrcCellChgOrderUtranCmdTrigRncNRncNoRsrcAvailCacFailure

Number of Inter-Rat Cell Change Order from Utran messages sent by RNC with which the reference cell is on a drift RNC and the handover has been initiated because of CAC failure or Service events. (NoRsrcAvailCacFailure)

Data Source

RNC C-Node

Source Field

VS.RrcCellChgOrderUtranCmdTrigRncNRnc.NoRsrcAvailCacFailure

Source Section

NeighbouringRnc

RrcCellChgOrderUtranCmdTrigRncNRncServicePs

Number of Inter-Rat Cell Change Order from Utran messages sent by RNC with which the reference cell is on a drift RNC and the handover has been initiated because of CAC failure or Service events. (ServicePs)

Data Source

RNC C-Node

Source Field

VS.RrcCellChgOrderUtranCmdTrigRncNRnc.ServicePs

Source Section

NeighbouringRnc

RrcCellChgOrderUtranCmdTrigRscpNRnc

Number of Inter-Rat Cell Change Order from Utran messages sent by RNC with a reference cell for which the RNC is drift and the handover has been initiated because of RSCP criteria. (RrcCellChgOrderUtranCmdTrigRscpNRnc)

Data Source

RNC C-Node

Source Field

VS.RrcCellChgOrderUtranCmdTrigRscpNRnc

Source Section

NeighbouringRnc

RrcConnectionReleaseNeighbRncCongestion

Number of RRC connection release on cells belonging to a neighbouring RNC (Congestion)

Data Source

RNC C-Node

Source Field

VS.RrcConnectionReleaseNeighbRnc.Congestion

Source Section

NeighbouringRnc

RrcConnectionReleaseNeighbRncDirectedSignallingConnectionReestablishement

Number of RRC connection release on cells belonging to a neighbouring RNC (DirectedSignallingConnectionReestablishement)

Data Source

RNC C-Node

Source Field

VS.RrcConnectionReleaseNeighbRnc.DirectedSignallingConnectionReestablishement

Source Section

NeighbouringRnc

RrcConnectionReleaseNeighbRncNormalEvent

Number of RRC connection release on cells belonging to a neighbouring RNC (NormalEvent)

Data Source

RNC C-Node

Source Field

VS.RrcConnectionReleaseNeighbRnc.NormalEvent

Source Section

NeighbouringRnc

RrcConnectionReleaseNeighbRncPreemptiveRelease

Number of RRC connection release on cells belonging to a neighbouring RNC (PreemptiveRelease)

Data Source

RNC C-Node

Source Field

VS.RrcConnectionReleaseNeighbRnc.PreemptiveRelease

Source Section

NeighbouringRnc

RrcConnectionReleaseNeighbRncReestablishmentReject

Number of RRC connection release on cells belonging to a neighbouring RNC (ReestablishmentReject)

Data Source

RNC C-Node

Source Field

VS.RrcConnectionReleaseNeighbRnc.ReestablishmentReject

Source Section

NeighbouringRnc

RrcConnectionReleaseNeighbRncRelcauseSpare

Number of RRC connection release on cells belonging to a neighbouring RNC (RelcauseSpare)

Data Source

RNC C-Node

Source Field

VS.RrcConnectionReleaseNeighbRnc.RelcauseSpare

Source Section

NeighbouringRnc

RrcConnectionReleaseNeighbRncUnspecifiedSccpReleaseCause

Number of RRC connection release on cells belonging to a neighbouring RNC (UnspecifiedSccpReleaseCause)

Data Source

RNC C-Node

Source Field

VS.RrcConnectionReleaseNeighbRnc.UnspecifiedSccpReleaseCause

Source Section

NeighbouringRnc

RrcConnectionReleaseNeighbRncUserInactivity

Number of RRC connection release on cells belonging to a neighbouring RNC (UserInactivity)

Data Source

RNC C-Node

Source Field

VS.RrcConnectionReleaseNeighbRnc.UserInactivity

Source Section

NeighbouringRnc

RrcHoFromUtranCmdTrigByEcNoNRncRescueCs

Number of Inter-RAT handover from Utran command sent by RNC with a reference cell for which the RNC is drift, and the handover has been initiated because of Ec/No. This is in the scope of 3G to 2G handover, CS only. (RescueCs)

Data Source

RNC C-Node

Source Field

VS.RrcHoFromUtranCmdTrigByEcNoNRnc.RescueCs

Source Section

NeighbouringRnc

RrcHoFromUtranCmdTrigByRscpNRncRescueCs

Number of Inter-RAT handover from Utran command sent by RNC with a reference cell for which the RNC is drift, and the handover has been initiated because of RSCP criteria. This is in the scope of 3G to 2G handover, CS only. (RescueCs)

Data Source

RNC C-Node

Source Field

VS.RrcHoFromUtranCmdTrigByRscpNRnc.RescueCs

Source Section

NeighbouringRnc

RrcHoFromUtranCmdTrigByUeTxPowerMaxNRnc

Number of 3G 2G CS handovers with a reference cell for which the RNC is drift and the handover has been initiated because of UE Tx Power Max Alarm criterion hit (RrcHoFromUtranCmdTrigByUeTxPowerMaxNRnc)

Data Source

RNC C-Node

Source Field

VS.RrcHoFromUtranCmdTrigByUeTxPowerMaxNRnc

Source Section

NeighbouringRnc

RrcHoFromUtranCmdTrigRncNrncNoRsrcAvailCacFailure

Number of Inter-RAT handover from Utran command sent by RNC with a reference cell for which the RNC is drift, and the handover has been initiated because of CAC failure events, NOT because of Alarm radio condition. This is in the scope of 3G to 2G handover, CS only. (NoRsrcAvailCacFailure)

Data Source

RNC C-Node

Source Field

VS.RrcHoFromUtranCmdTrigRncNrnc.NoRsrcAvailCacFailure

Source Section

NeighbouringRnc

RrcHoFromUtranFailureNeighbRncNoRsrcAvailCacFailure

Number of Inter-Rat Handover from Utran failure received by RNC with a reference cell for which the RNC is drift. This is in the scope of 3G to 2G handover, CS only (NoRsrcAvailCacFailure)

Data Source

RNC C-Node

Source Field

VS.RrcHoFromUtranFailureNeighbRnc.NoRsrcAvailCacFailure

Source Section

NeighbouringRnc

RrcHoFromUtranFailureNeighbRncRescueCs

Number of Inter-Rat Handover from Utran failure received by RNC with a reference cell for which the RNC is drift. This is in the scope of 3G to 2G handover, CS only (RescueCs)

Data Source

RNC C-Node

Source Field

VS.RrcHoFromUtranFailureNeighbRnc.RescueCs

Source Section

NeighbouringRnc

RRCRBReconfigAttNeighbRnc

Attempted Radio Bearer Reconfigurations (NeighbRnc)

Data Source

RNC C-Node

Source Field

VS.RRC.RBReconfigAtt.NeighbRnc

Source Section

NeighbouringRnc

RRCRBReconfigSuccNeighbRnc

Successful Radio Bearer Reconfigurations (NeighbRnc)

Data Source

RNC C-Node

Source Field

VS.RRC.RBReconfigSucc.NeighbRnc

Source Section

NeighbouringRnc

SHO_AttRLAddUESide

Attempted radio link additions to active link set (UE side)

Data Source

RNC

Source Field

SHO.AttRLAddUESide

Source Section

Soft/Softer Handover - Radio Link Additions and Deletions (UE Side)

SHO_AttRLAddUESide_InterRNC_CSD

Number of Attempted Inter-RNC Soft/Softer Handovers for Service Type CS Data

Data Source

RNC

Source Field

SHO.AttRLAddUESide.InterRNC.CSD

Source Section

Inter RNC Soft/Softer Handover

SHO_AttRLAddUESide_InterRNC_CSDandPS

Number of Inter-RNC Soft/Softer Handover Attempts for Service Type Circuit Switched Data combined with any PS data rate

Data Source

RNC

Source Field

SHO.AttRLAddUESide.InterRNC.CSDandPS

Source Section

Inter RNC Soft/Softer Handover

SHO_AttRLAddUESide_InterRNC_CSV

Number of Attempted Inter-RNC Soft/Softer Handovers for CS Voice

Data Source

RNC

Source Field

SHO.AttRLAddUESide.InterRNC.CSV

Source Section

Inter RNC Soft/Softer Handover

SHO_AttRLAddUESide_InterRNC_CSVandPS

Number of Inter-RNC Soft/Softer Handover Attempts for Service Type Circuit Switched Voice combined with any PS data rate

Data Source

RNC

Source Field

SHO.AttRLAddUESide.InterRNC.CSVandPS

Source Section

Inter RNC Soft/Softer Handover

SHO_AttRLAddUESide_InterRNC_PSHighData

Number of Attempted Inter-RNC Soft/Softer Handovers for PS with high data rate, >64kbps

Data Source

RNC

Source Field

SHO.AttRLAddUESide.InterRNC.PSHighData

Source Section

Inter RNC Soft/Softer Handover

SHO_AttRLAddUESide_InterRNC_PSLowData

Number of Attempted Inter-RNC Soft/Softer Handovers for PS with low data rate, <=64kbps

Data Source

RNC

Source Field

SHO.AttRLAddUESide.InterRNC.PSLowData

Source Section

Inter RNC Soft/Softer Handover

SHO_AttRLAddUESide_InterRNC_Signalling

Number of Attempted Inter-RNC Soft/Softer Handovers for signalling

Data Source

RNC

Source Field

SHO.AttRLAddUESide.InterRNC.Signalling

Source Section

Inter RNC Soft/Softer Handover

SHO_AttRLDelUESide

Attempted radio link deletions from active link set (UE side)

Data Source

RNC

Source Field

SHO.AttRLDelUESide

Source Section

Soft/Softer Handover: Radio Link Deletions from Active Link Set (UE Side)

SHO_FailRLAddUESide_ConfigUnsupport

Failed radio link additions to active link set (UE side) per failure cause - Configuration Unsupported

Data Source

RNC

Source Field

SHO.FailRLAddUESide.ConfigUnsupport

Source Section

Soft/Softer Handover - Radio Link Additions and Deletions (UE Side)

SHO_FailRLAddUESide_IncompSimultReconf

Failed radio link additions to active link set (UE side) per failure cause - Incompatible Simultaneous Reconfiguration

Data Source

RNC

Source Field

SHO.FailRLAddUESide.IncompSimultReconf

Source Section

Soft/Softer Handover - Radio Link Additions and Deletions (UE Side)

SHO_FailRLAddUESide_InterRNC_CSD

Number of Failed Inter-RNC Soft/Softer Handover Attempts for Service Type CS Data

Data Source

RNC

Source Field

SHO.FailRLAddUESide.InterRNC.CSD

Source Section

Inter RNC Soft/Softer Handover

SHO_FailRLAddUESide_InterRNC_CSDandPS

Number of Failed Inter-RNC Soft/Softer Handover Attempts for Service Type CS Data combined with PS (any Data Rate)

Data Source

RNC

Source Field

SHO.FailRLAddUESide.InterRNC.CSDandPS

Source Section

Inter RNC Soft/Softer Handover

SHO_FailRLAddUESide_InterRNC_CSV

Number of Failed Inter-RNC Soft/Softer Handover Attempts for CS Voice

Data Source

RNC

Source Field

SHO.FailRLAddUESide.InterRNC.CSV

Source Section

Inter RNC Soft/Softer Handover

SHO_FailRLAddUESide_InterRNC_CSVandPS

Number of Failed Inter-RNC Soft/Softer Handover Attempts for Service Type Circuit Switched Voice combined with any PS data rate

Data Source

RNC

Source Field

SHO.FailRLAddUESide.InterRNC.CSVandPS

Source Section

Inter RNC Soft/Softer Handover

SHO_FailRLAddUESide_InterRNC_PSHighData

Number of Failed Inter-RNC Soft/Softer Handover Attempts for PS with high data rate, >64kbps

Data Source

RNC

Source Field

SHO.FailRLAddUESide.InterRNC.PSHighData

Source Section

Inter RNC Soft/Softer Handover

SHO_FailRLAddUESide_InterRNC_PSLowData

Number of Failed Inter-RNC Soft/Softer Handover Attempts for PS with low data rate, <=64kbps

Data Source

RNC

Source Field

SHO.FailRLAddUESide.InterRNC.PSLowData

Source Section

Inter RNC Soft/Softer Handover

SHO_FailRLAddUESide_InterRNC_Signalling

Number of Failed Inter-RNC Soft/Softer Handover Attempts for signalling

Data Source

RNC

Source Field

SHO.FailRLAddUESide.InterRNC.Signalling

Source Section

Inter RNC Soft/Softer Handover

SHO_FailRLAddUESide_InvalidConfig

Failed radio link additions to active link set (UE side) per failure cause - Invalid Configuration

Data Source

RNC

Source Field

SHO.FailRLAddUESide.InvalidConfig

Source Section

Soft/Softer Handover - Radio Link Additions and Deletions (UE Side)

SHO_FailRLAddUESide_NoReply

Failed radio link additions to active link set (UE side) per failure cause - No Reply

Data Source

RNC

Source Field

SHO.FailRLAddUESide.NoReply

Source Section

Soft/Softer Handover - Radio Link Additions and Deletions (UE Side)

SHO_FailRLAddUESide_ProtErr

Failed radio link additions to active link set (UE side) per failure cause - Protocol Error

Data Source

RNC

Source Field

SHO.FailRLAddUESide.ProtErr

Source Section

Soft/Softer Handover - Radio Link Additions and Deletions (UE Side)

SHO_SuccRLAddUESide

Successful radio link additions to active link set (UE side)

Data Source

RNC

Source Field

SHO.SuccRLAddUESide

Source Section

Soft/Softer Handover - Radio Link Additions and Deletions (UE Side)

SHO_SuccRLDelUESide

Successful radio link deletions from active link set (UE side)

Data Source

RNC

Source Field

SHO.SuccRLDelUESide

Source Section

Soft/Softer Handover: Radio Link Deletions from Active Link Set (UE Side)

SHOAttUESideNeighbRncRLAdd

Attempted Soft and Softer Handovers with radio link additions / deletions during active set update procedures from a UE point of view. (NeighbRnc.RLAdd)

Data Source

RNC C-Node

Source Field

SHO.AttUESide.NeighbRnc.RLAdd

Source Section

NeighbouringRnc

SHOAttUESideNeighbRncRLDel

Attempted Soft and Softer Handovers with radio link additions / deletions during active set update procedures from a UE point of view. (NeighbRnc.RLDel)

Data Source

RNC C-Node

Source Field

SHO.AttUESide.NeighbRnc.RLDel

Source Section

NeighbouringRnc

SuccServCellChangeHSDSCH

Successful Serving HS-DSCH Cell Changes

Data Source

RNC

Source Field

VS.SuccServCellChangeHSDSCH

Source Section

RncFunction

SucHspaToDchFallbackNrncHsdpaDchToDchDch

Number of calls successfully fallbacked from HSPA to DCH on RAB assignment, mobility or reconfiguration event. (HsdpaDchToDchDch)

Data Source

RNC C-Node

Source Field

VS.SucHspaToDchFallbackNrnc.HsdpaDchToDchDch

Source Section

NeighbouringRnc

UE_MeasRep_6A_Strm_128UL_HSDSCH

This measurement indicates the number of 6A measurement reports received by the RNC for a UE providing 128kbps UL Streaming with HS DL. The PM indicates that the GBR may not have been fulfilled in the UL for some period of time.

Data Source

RNC

Source Field

VS.UE.MeasRep.6A.Strm.128UL-HSDSCH

Source Section

Power and Signal Strength PMs

UeLocationUebasedAgpsSuccessNeighbRncUeEstimatedAccuracyBetterThan50m

Number of succeeded location of the UE using the UE-based AGPS technology, when the reference cell is located on a Drift RNC (UeEstimatedAccuracyBetterThan50m)

Data Source

RNC C-Node

Source Field

VS.UeLocationUebasedAgpsSuccessNeighbRnc.UeEstimatedAccuracyBetterThan50m

Source Section

NeighbouringRnc

UeLocationUebasedAgpsSuccessNeighbRncUeEstimatedAccuracyBetween50mAnd150m

Number of succeeded location of the UE using the UE-based AGPS technology, when the reference cell is located on a Drift RNC (UeEstimatedAccuracyBetween50mAnd150m)

Data Source

RNC C-Node

Source Field

VS.UeLocationUebasedAgpsSuccessNeighbRnc.UeEstimatedAccuracyBetween50mAnd150m

Source Section

NeighbouringRnc

UeLocationUebasedAgpsSuccessNeighbRncUeEstimatedAccuraryWorseThan150m

Number of succeeded location of the UE using the UE-based AGPS technology, when the reference cell is located on a Drift RNC (UeEstimatedAccuraryWorseThan150m)

Data Source

RNC C-Node

Source Field

VS.UeLocationUebasedAgpsSuccessNeighbRnc.UeEstimatedAccuraryWorseThan150m

Source Section

NeighbouringRnc

UeLocationUebasedAgpsUnsuccessNeighbRncAgpsUEbasedTooLong

Number of failed location of the UE using the UE-based AGPS technology, when the reference cell is located on a Drift RNC (AgpsUEbasedTooLong)

Data Source

RNC C-Node

Source Field

VS.UeLocationUebasedAgpsUnsuccessNeighbRnc.AgpsUEbasedTooLong

Source Section

NeighbouringRnc

UeLocationUebasedAgpsUnsuccessNeighbRncIsmlcAssDataTooLong

Number of failed location of the UE using the UE-based AGPS technology, when the reference cell is located on a Drift RNC (IsmlcAssDataTooLong)

Data Source

RNC C-Node

Source Field

VS.UeLocationUebasedAgpsUnsuccessNeighbRnc.IsmlcAssDataTooLong

Source Section

NeighbouringRnc

UeLocationUebasedAgpsUnsuccessNeighbRncOther

Number of failed location of the UE using the UE-based AGPS technology, when the reference cell is located on a Drift RNC (Other)

Data Source

RNC C-Node

Source Field

VS.UeLocationUebasedAgpsUnsuccessNeighbRnc.Other

Source Section

NeighbouringRnc

UeLocationUebasedAgpsUnsuccessNeighbRncSasPcapFailure

Number of failed location of the UE using the UE-based AGPS technology, when the reference cell is located on a Drift RNC (SasPcapFailure)

Data Source

RNC C-Node

Source Field

VS.UeLocationUebasedAgpsUnsuccessNeighbRnc.SasPcapFailure

Source Section

NeighbouringRnc

UeLocationUebasedAgpsUnsuccessNeighbRncSasServicesNotAvailable

Number of failed location of the UE using the UE-based AGPS technology, when the reference cell is located on a Drift RNC (SasServicesNotAvailable)

Data Source

RNC C-Node

Source Field

VS.UeLocationUebasedAgpsUnsuccessNeighbRnc.SasServicesNotAvailable

Source Section

NeighbouringRnc

UeLocationUebasedAgpsUnsuccessNeighbRncUePositioningError

Number of failed location of the UE using the UE-based AGPS technology, when the reference cell is located on a Drift RNC (UePositioningError)

Data Source

RNC C-Node

Source Field

VS.UeLocationUebasedAgpsUnsuccessNeighbRnc.UePositioningError

Source Section

NeighbouringRnc

UERBRateAdapDownReqNeighbCellDownlink

Number of RB rate downsize triggered by the traffic monitoring. (Downlink)

Data Source

RNC C-Node

Source Field

VS.UERBRateAdapDownReqNeighbCell.Downlink

Source Section

NeighbouringRnc

UERBRateAdapDownReqNeighbCellUplink

Number of RB rate downsize triggered by the traffic monitoring. (Uplink)

Data Source

RNC C-Node

Source Field

VS.UERBRateAdapDownReqNeighbCell.Uplink

Source Section

NeighbouringRnc

UERBRateAdapDownSuccNeighbCellDownlink

Number of RB Reconfiguration Success resulting from the RB rate downsize (Downlink)

Data Source

RNC C-Node

Source Field

VS.UERBRateAdapDownSuccNeighbCell.Downlink

Source Section

NeighbouringRnc

UERBRateAdapDownSuccNeighbCellUplink

Number of RB Reconfiguration Success resulting from the RB rate downsize (Uplink)

Data Source

RNC C-Node

Source Field

VS.UERBRateAdapDownSuccNeighbCell.Uplink

Source Section

NeighbouringRnc

UERBRateAdapUpReqNeighbCellDownlink

Number of RB rate upsize triggered by the traffic monitoring. (Downlink)

Data Source

RNC C-Node

Source Field

VS.UERBRateAdapUpReqNeighbCell.Downlink

Source Section

NeighbouringRnc

UERBRateAdapUpReqNeighbCellUplink

Number of RB rate upsize triggered by the traffic monitoring. (Uplink)

Data Source

RNC C-Node

Source Field

VS.UERBRateAdapUpReqNeighbCell.Uplink

Source Section

NeighbouringRnc

UERBRateAdapUpSuccNeighbCellDownlink

Number of RB Reconfiguration Success resulting from the RB rate upsize (Downlink)

Data Source

RNC C-Node

Source Field

VS.UERBRateAdapUpSuccNeighbCell.Downlink

Source Section

NeighbouringRnc

UERBRateAdapUpSuccNeighbCellUplink

Number of RB Reconfiguration Success resulting from the RB rate upsize (Uplink)

Data Source

RNC C-Node

Source Field

VS.UERBRateAdapUpSuccNeighbCell.Uplink

Source Section

NeighbouringRnc

UEStateTransAtt_DCH_PCH

Number of attempted RB reconfigurations to move a UE from Cell DCH to URA PCH

Data Source

RNC

Source Field

VS.UEStateTransAtt.DCH_PCH

Source Section

UE State Transition Performance Measurements

UEStateTransAtt_PCH_DCH

Number of attempted RB reconfigurations to move a UE from URA PCH to Cell DCH

Data Source

RNC

Source Field

VS.UEStateTransAtt.PCH_DCH

Source Section

UE State Transition Performance Measurements

UEStateTransFail_DCH_PCH

Number of failed Cell DCH to URA PCH transitions

Data Source

RNC

Source Field

VS.UEStateTransFail.DCH_PCH

Source Section

UE State Transition Performance Measurements

UEStateTransFail_PCH_DCH

Number of failed URA PCH to Cell DCH transitions

Data Source

RNC

Source Field

VS.UEStateTransFail.PCH_DCH

Source Section

UE State Transition Performance Measurements

UEStateTransSucc_DCH_PCH

Successful UE Transitions from Cell_DCH to URA_PCH

Data Source

RNC

Source Field

VS.UEStateTransSucc.DCH_PCH

Source Section

RncFunction

UnsucHspaToDchFallbackNrncDlHsdpaUlDch

Number of calls unsuccessfully fallbacked from HSPA to DCH on RAB assignment, mobility or reconfiguration event. (DlHsdpaUlDch)

Data Source

RNC C-Node

Source Field

VS.UnsucHspaToDchFallbackNrnc.DlHsdpaUlDch

Source Section

NeighbouringRnc

UpsizingSuccessNeighbRncDchHsdpa

Number of successful upsizing from always on step1 for communication which reference cell is on a drift RNC. This counter is screened according to the target downlink ASConfId (DchHsdpa)

Data Source

RNC C-Node

Source Field

VS.UpsizingSuccessNeighbRnc.DchHsdpa

Source Section

NeighbouringRnc

UpsizingSuccessNeighbRncDchOther

Number of successful upsizing from always on step1 for communication which reference cell is on a drift RNC. This counter is screened according to the target downlink ASConfId (DchOther)

Data Source

RNC C-Node

Source Field

VS.UpsizingSuccessNeighbRnc.DchOther

Source Section

NeighbouringRnc

UpsizingSuccessNeighbRncDchPsIb128

Number of successful upsizing from always on step1 for communication which reference cell is on a drift RNC. This counter is screened according to the target downlink ASConfId (DchPsIb128)

Data Source

RNC C-Node

Source Field

VS.UpsizingSuccessNeighbRnc.DchPsIb128

Source Section

NeighbouringRnc

UpsizingSuccessNeighbRncDchPsIb256

Number of successful upsizing from always on step1 for communication which reference cell is on a drift RNC. This counter is screened according to the target downlink ASConfId (DchPsIb256)

Data Source

RNC C-Node

Source Field

VS.UpsizingSuccessNeighbRnc.DchPsIb256

Source Section

NeighbouringRnc

UpsizingSuccessNeighbRncDchPsIb384

Number of successful upsizing from always on step1 for communication which reference cell is on a drift RNC. This counter is screened according to the target downlink ASConfId (DchPsIb384)

Data Source

RNC C-Node

Source Field

VS.UpsizingSuccessNeighbRnc.DchPsIb384

Source Section

NeighbouringRnc

UpsizingSuccessNeighbRncDchPsIb64

Number of successful upsizing from always on step1 for communication which reference cell is on a drift RNC. This counter is screened according to the target downlink ASConfId (DchPsIb64)

Data Source

RNC C-Node

Source Field

VS.UpsizingSuccessNeighbRnc.DchPsIb64

Source Section

NeighbouringRnc

UpsizingSuccessNeighbRncDchPsIbLt64

Number of successful upsizing from always on step1 for communication which reference cell is on a drift RNC. This counter is screened according to the target downlink ASConfId (DchPsIbLt64)

Data Source

RNC C-Node

Source Field

VS.UpsizingSuccessNeighbRnc.DchPsIbLt64

Source Section

NeighbouringRnc

UpsizingUnsuccessNeighbRncDchHsdpa

Number of unsuccessful upsizing from always on step1 for communication which reference cell is on a drift RNC. This counter is screened according to the target downlink ASConfId (DchHsdpa)

Data Source

RNC C-Node

Source Field

VS.UpsizingUnsuccessNeighbRnc.DchHsdpa

Source Section

NeighbouringRnc

UpsizingUnsuccessNeighbRncDchOther

Number of unsuccessful upsizing from always on step1 for communication which reference cell is on a drift RNC. This counter is screened according to the target downlink ASConfId (DchOther)

Data Source

RNC C-Node

Source Field

VS.UpsizingUnsuccessNeighbRnc.DchOther

Source Section

NeighbouringRnc

UpsizingUnsuccessNeighbRncDchPsIb128

Number of unsuccessful upsizing from always on step1 for communication which reference cell is on a drift RNC. This counter is screened according to the target downlink ASConfId (DchPsIb128)

Data Source

RNC C-Node

Source Field

VS.UpsizingUnsuccessNeighbRnc.DchPsIb128

Source Section

NeighbouringRnc

UpsizingUnsuccessNeighbRncDchPsIb256

Number of unsuccessful upsizing from always on step1 for communication which reference cell is on a drift RNC. This counter is screened according to the target downlink ASConfId (DchPsIb256)

Data Source

RNC C-Node

Source Field

VS.UpsizingUnsuccessNeighbRnc.DchPsIb256

Source Section

NeighbouringRnc

UpsizingUnsuccessNeighbRncDchPsIb384

Number of unsuccessful upsizing from always on step1 for communication which reference cell is on a drift RNC. This counter is screened according to the target downlink ASConfId (DchPsIb384)

Data Source

RNC C-Node

Source Field

VS.UpsizingUnsuccessNeighbRnc.DchPsIb384

Source Section

NeighbouringRnc

UpsizingUnsuccessNeighbRncDchPsIb64

Number of unsuccessful upsizing from always on step1 for communication which reference cell is on a drift RNC. This counter is screened according to the target downlink ASConfId (DchPsIb64)

Data Source

RNC C-Node

Source Field

VS.UpsizingUnsuccessNeighbRnc.DchPsIb64

Source Section

NeighbouringRnc

UpsizingUnsuccessNeighbRncDchPsIbLt64

Number of unsuccessful upsizing from always on step1 for communication which reference cell is on a drift RNC. This counter is screened according to the target downlink ASConfId (DchPsIbLt64)

Data Source

RNC C-Node

Source Field

VS.UpsizingUnsuccessNeighbRnc.DchPsIbLt64

Source Section

NeighbouringRnc

WithIurIncomSrnsRelocAttemptOtherCause

Number of attempted incoming SRNS Relocation with IuR. (OtherCause)

Data Source

RNC C-Node

Source Field

VS.WithIurIncomSrnsRelocAttempt.OtherCause

Source Section

NeighbouringRnc

WithIurIncomSrnsRelocAttemptRsrcOptReloc

Number of attempted incoming SRNS Relocation with IuR. (RsrcOptReloc)

Data Source

RNC C-Node

Source Field

VS.WithIurIncomSrnsRelocAttempt.RsrcOptReloc

Source Section

NeighbouringRnc

WithIurIncomSrnsRelocAttemptTimeCritReloc

Number of attempted incoming SRNS Relocation with IuR. (TimeCritReloc)

Data Source

RNC C-Node

Source Field

VS.WithIurIncomSrnsRelocAttempt.TimeCritReloc

Source Section

NeighbouringRnc

WithIurIncomSrnsRelocFailFailRelocProc

Number of failed incoming SRNS Relocation with IuR. (FailRelocProc)

Data Source

RNC C-Node

Source Field

VS.WithIurIncomSrnsRelocFail.FailRelocProc

Source Section

NeighbouringRnc

WithIurIncomSrnsRelocFailFailRncProc

Number of failed incoming SRNS Relocation with IuR. (FailRncProc)

Data Source

RNC C-Node

Source Field

VS.WithIurIncomSrnsRelocFail.FailRncProc

Source Section

NeighbouringRnc

WithIurIncomSrnsRelocFailFailSecurProc

Number of failed incoming SRNS Relocation with IuR. (FailSecurProc)

Data Source

RNC C-Node

Source Field

VS.WithIurIncomSrnsRelocFail.FailSecurProc

Source Section

NeighbouringRnc

WithIurIncomSrnsRelocFailOtherCause

Number of failed incoming SRNS Relocation with IuR. (OtherCause)

Data Source

RNC C-Node

Source Field

VS.WithIurIncomSrnsRelocFail.OtherCause

Source Section

NeighbouringRnc

WithIurIncomSrnsRelocFailPrTcCsCnvrs

Number of unsuccessful incoming SRNS Relocation with IuR per traffic class (CsCnvrs)

Data Source

RNC C-Node

Source Field

VS.WithIurIncomSrnsRelocFailPrTc.CsCnvrs

Source Section

NeighbouringRnc

WithIurIncomSrnsRelocFailPrTcCsStrm

Number of unsuccessful incoming SRNS Relocation with IuR per traffic class (CsStrm)

Data Source

RNC C-Node

Source Field

VS.WithIurIncomSrnsRelocFailPrTc.CsStrm

Source Section

NeighbouringRnc

WithIurIncomSrnsRelocFailPrTcPsBkgnd

Number of unsuccessful incoming SRNS Relocation with IuR per traffic class (PsBkgnd)

Data Source

RNC C-Node

Source Field

VS.WithIurIncomSrnsRelocFailPrTc.PsBkgnd

Source Section

NeighbouringRnc

WithIurIncomSrnsRelocFailPrTcPsIntr

Number of unsuccessful incoming SRNS Relocation with IuR per traffic class (PsIntr)

Data Source

RNC C-Node

Source Field

VS.WithIurIncomSrnsRelocFailPrTc.PsIntr

Source Section

NeighbouringRnc

WithIurIncomSrnsRelocFailPrTcPsStrm

Number of unsuccessful incoming SRNS Relocation with IuR per traffic class (PsStrm)

Data Source

RNC C-Node

Source Field

VS.WithIurIncomSrnsRelocFailPrTc.PsStrm

Source Section

NeighbouringRnc

WithIurIncomSrnsRelocSuccessOtherCause

Number of successful incoming SRNS Relocation with IuR. (OtherCause)

Data Source

RNC C-Node

Source Field

VS.WithIurIncomSrnsRelocSuccess.OtherCause

Source Section

NeighbouringRnc

WithIurIncomSrnsRelocSuccessRsrcOptReloc

Number of successful incoming SRNS Relocation with IuR. (RsrcOptReloc)

Data Source

RNC C-Node

Source Field

VS.WithIurIncomSrnsRelocSuccess.RsrcOptReloc

Source Section

NeighbouringRnc

WithIurIncomSrnsRelocSuccessTimeCritReloc

Number of successful incoming SRNS Relocation with IuR. (TimeCritReloc)

Data Source

RNC C-Node

Source Field

VS.WithIurIncomSrnsRelocSuccess.TimeCritReloc

Source Section

NeighbouringRnc

WithIurIncomSrnsRelocSucPrTcCsCnvrs

Number of successful incoming SRNS Relocation with IuR per traffic class. (CsCnvrs)

Data Source

RNC C-Node

Source Field

VS.WithIurIncomSrnsRelocSucPrTc.CsCnvrs

Source Section

NeighbouringRnc

WithIurIncomSrnsRelocSucPrTcCsStrm

Number of successful incoming SRNS Relocation with IuR per traffic class. (CsStrm)

Data Source

RNC C-Node

Source Field

VS.WithIurIncomSrnsRelocSucPrTc.CsStrm

Source Section

NeighbouringRnc

WithIurIncomSrnsRelocSucPrTcPsBkgnd

Number of successful incoming SRNS Relocation with IuR per traffic class. (PsBkgnd)

Data Source

RNC C-Node

Source Field

VS.WithIurIncomSrnsRelocSucPrTc.PsBkgnd

Source Section

NeighbouringRnc

WithIurIncomSrnsRelocSucPrTcPsIntr

Number of successful incoming SRNS Relocation with IuR per traffic class. (PsIntr)

Data Source

RNC C-Node

Source Field

VS.WithIurIncomSrnsRelocSucPrTc.PsIntr

Source Section

NeighbouringRnc

WithIurIncomSrnsRelocSucPrTcPsStrm

Number of successful incoming SRNS Relocation with IuR per traffic class. (PsStrm)

Data Source

RNC C-Node

Source Field

VS.WithIurIncomSrnsRelocSucPrTc.PsStrm

Source Section

NeighbouringRnc

WithIurOutgoSrnsRelocAttemptOtherCause

Number of attempted outgoing SRNS Relocation with IuR. (OtherCause)

Data Source

RNC C-Node

Source Field

VS.WithIurOutgoSrnsRelocAttempt.OtherCause

Source Section

NeighbouringRnc

WithIurOutgoSrnsRelocAttemptRsrcOptReloc

Number of attempted outgoing SRNS Relocation with IuR. (RsrcOptReloc)

Data Source

RNC C-Node

Source Field

VS.WithIurOutgoSrnsRelocAttempt.RsrcOptReloc

Source Section

NeighbouringRnc

WithIurOutgoSrnsRelocFailFailOtherCause

Number of failed outgoing SRNS Relocation with IuR. (FailOtherCause)

Data Source

RNC C-Node

Source Field

VS.WithIurOutgoSrnsRelocFail.FailOtherCause

Source Section

NeighbouringRnc

WithIurOutgoSrnsRelocFailFailRadioProc

Number of failed outgoing SRNS Relocation with IuR. (FailRadioProc)

Data Source

RNC C-Node

Source Field

VS.WithIurOutgoSrnsRelocFail.FailRadioProc

Source Section

NeighbouringRnc

WithIurOutgoSrnsRelocFailFailRelocProcCanNormUtran

Number of failed outgoing SRNS Relocation with IuR. (FailRelocProcCanNormUtran)

Data Source

RNC C-Node

Source Field

VS.WithIurOutgoSrnsRelocFail.FailRelocProcCanNormUtran

Source Section

NeighbouringRnc

WithIurOutgoSrnsRelocFailFailRelocProcTarget

Number of failed outgoing SRNS Relocation with IuR. (FailRelocProcTarget)

Data Source

RNC C-Node

Source Field

VS.WithIurOutgoSrnsRelocFail.FailRelocProcTarget

Source Section

NeighbouringRnc

WithIurOutgoSrnsRelocFailFailRncProc

Number of failed outgoing SRNS Relocation with IuR. (FailRncProc)

Data Source

RNC C-Node

Source Field

VS.WithIurOutgoSrnsRelocFail.FailRncProc

Source Section

NeighbouringRnc

WithIurOutgoSrnsRelocFailPrTcCsCnvrs

Number of unsuccessful outgoing SRNS Relocation with IuR per traffic class (CsCnvrs)

Data Source

RNC C-Node

Source Field

VS.WithIurOutgoSrnsRelocFailPrTc.CsCnvrs

Source Section

NeighbouringRnc

WithIurOutgoSrnsRelocFailPrTcCsStrm

Number of unsuccessful outgoing SRNS Relocation with IuR per traffic class (CsStrm)

Data Source

RNC C-Node

Source Field

VS.WithIurOutgoSrnsRelocFailPrTc.CsStrm

Source Section

NeighbouringRnc

WithIurOutgoSrnsRelocFailPrTcPsBkgnd

Number of unsuccessful outgoing SRNS Relocation with IuR per traffic class (PsBkgnd)

Data Source

RNC C-Node

Source Field

VS.WithIurOutgoSrnsRelocFailPrTc.PsBkgnd

Source Section

NeighbouringRnc

WithIurOutgoSrnsRelocFailPrTcPsIntr

Number of unsuccessful outgoing SRNS Relocation with IuR per traffic class (PsIntr)

Data Source

RNC C-Node

Source Field

VS.WithIurOutgoSrnsRelocFailPrTc.PsIntr

Source Section

NeighbouringRnc

WithIurOutgoSrnsRelocFailPrTcPsStrm

Number of unsuccessful outgoing SRNS Relocation with IuR per traffic class (PsStrm)

Data Source

RNC C-Node

Source Field

VS.WithIurOutgoSrnsRelocFailPrTc.PsStrm

Source Section

NeighbouringRnc

WithIurOutgoSrnsRelocSuccessOtherCause

Number of successful outgoing SRNS Relocation with IuR. (OtherCause)

Data Source

RNC C-Node

Source Field

VS.WithIurOutgoSrnsRelocSuccess.OtherCause

Source Section

NeighbouringRnc

WithIurOutgoSrnsRelocSuccessRsrcOptReloc

Number of successful outgoing SRNS Relocation with IuR. (RsrcOptReloc)

Data Source

RNC C-Node

Source Field

VS.WithIurOutgoSrnsRelocSuccess.RsrcOptReloc

Source Section

NeighbouringRnc

WithIurOutgoSrnsRelocSucPrTcCsCnvrs

Number of successful outgoing SRNS Relocation with IuR per traffic class. (CsCnvrs)

Data Source

RNC C-Node

Source Field

VS.WithIurOutgoSrnsRelocSucPrTc.CsCnvrs

Source Section

NeighbouringRnc

WithIurOutgoSrnsRelocSucPrTcCsStrm

Number of successful outgoing SRNS Relocation with IuR per traffic class. (CsStrm)

Data Source

RNC C-Node

Source Field

VS.WithIurOutgoSrnsRelocSucPrTc.CsStrm

Source Section

NeighbouringRnc

WithIurOutgoSrnsRelocSucPrTcPsBkgnd

Number of successful outgoing SRNS Relocation with IuR per traffic class. (PsBkgnd)

Data Source

RNC C-Node

Source Field

VS.WithIurOutgoSrnsRelocSucPrTc.PsBkgnd

Source Section

NeighbouringRnc

WithIurOutgoSrnsRelocSucPrTcPsIntr

Number of successful outgoing SRNS Relocation with IuR per traffic class. (PsIntr)

Data Source

RNC C-Node

Source Field

VS.WithIurOutgoSrnsRelocSucPrTc.PsIntr

Source Section

NeighbouringRnc

WithIurOutgoSrnsRelocSucPrTcPsStrm

Number of successful outgoing SRNS Relocation with IuR per traffic class. (PsStrm)

Data Source

RNC C-Node

Source Field

VS.WithIurOutgoSrnsRelocSucPrTc.PsStrm

Source Section

NeighbouringRnc

NodeB Primitive Calculations

The following is a list of primitive calculations for the NodeB entity.

ce_usage

New name:RF_ChanElementUsage_Total.The percentage of used CEs (dedicated and common channel elements) from the available CEs.The CE usage gives an indication about the percentage of the NodeB capacity, which is currently in use

Calculation

```
RF_ChanElementUsage_Total
```

dedic_ce_usage

New name:RF_ChanElementUsage_Dedicated.The percentage of used dedicated CEs (channel elements) related to the number of available CEs

Calculation

```
RF_ChanElementUsage_Dedicated
```

GRAPHmultiLineSeparator

Special Control Field for Multi-Line Graphs

Calculation

```
""
```

NUMDAYS

of days in Report

Calculation

```
DAYSINREPORT()
```

NUMHOURS

of hours in Summation Data

Calculation

NodeB Peg Counts

The following is a list of peg counts for the NodeB entity.

Data_interval_for_NodeB_data

Data interval for the Node B data collection in seconds. It is taken from the relevant <gp> tag in the Node B XML data file.

Data Source

NodeB

Source Field

<gp> tag

Data_interval_for_RNC_data

Data interval for the RNC data collection in seconds. It is taken from the relevant <gp> tag in the RNC XML data file.

Data Source

RNC

Source Field

<gp> tag

FP_ULCongTime

Iub UL Congestion time percentage. This measurement provides the proportion of time the Iub interface is congested in UL.

Data Source

NodeB

Source Field

VS.FP.ULCongTime

Source Section

NodeBFunction

Iub_Ave_AllQoSusers

Iub Average Number of All QoS Class Users

Data Source

RNC

Source Field

VS.Iub.Ave.AllQoSusers

Source Section

NodeBFunction

Iub_Max_AllQoSusers

Iub Maximum Number of All QoS Class Users

Data Source

RNC

Source Field

VS.Iub.Max.AllQoSusers

Source Section

NodeBFunction

Iub_MissedBW_HSAllQoS

Iub Missed Bandwidth for HSDPA All QoS Class Users

Data Source

RNC

Source Field

VS.Iub.MissedBW.HSAllQoS

Source Section

NodeBFunction

Iub_MissedBW_R99AllQoS

Iub Missed Bandwidth for R99 All QoS Class Users

Data Source

RNC

Source Field

VS.Iub.MissedBW.R99AllQoS

Source Section

NodeBFunction

Iub_RC_CongTime_sum

Iub DL RateControl Congestion time percentage

Data Source

RNC

Source Field

Iub.RC.CongTime.sum

Source Section

Iub Rate Control

Iub_RC_CongTime_WorstPVC

Iub DL RateControl Congestion time percentage on Most Congested PVC

Data Source

RNC

Source Field

Iub.RC.CongTime.WorstPVC

Source Section

Iub Rate Control

Iub_Util_AllR99QoS

Iub Utilisation for All R99 QoS Class Users

Data Source

RNC

Source Field

VS.Iub.Util.AllR99QoS

Source Section

NodeBFunction

Iub_Util_HSAllQoS

Iub Utilisation for HSDPA All QoS Class Users

Data Source

RNC

Source Field

VS.Iub.Util.HSAllQoS

Source Section

NodeBFunction

MAC_DataFramePayload_EDCH

Amount of Iub interface E-DCH DATA FRAME payload data. The counter provides the amount of Iub interface E-DCH DATA FRAME payload data transmitted by MAC-e (bits).

Data Source

NodeB

Source Field

VS.MAC.DataFramePayload.EDCH

Source Section

NodeBFunction

MAC_NumPdu_EDCH_Ack

Number of Transport Blocks Acknowledged with ACK. The counter provides the maximum number of positive MAC-e PDU (Transport Block) acknowledgments sent by the Channel Element.

Data Source

NodeB

Source Field

VS.MAC.NumPdu.EDCH.Ack

Source Section

NodeBFunction

MAC_NumPdu_EDCH_Nack

Number of Transport Blocks Acknowledged with NACK. The counter provides the maximum number of negative MAC-e PDU (Transport Block) acknowledgments sent by the Channel Element.

Data Source

NodeB

Source Field

VS.MAC.NumPdu.EDCH.Nack

Source Section

NodeBFunction

nodeBFunction_IubLink

Fully Distinguished Name of the Iub link object associcated with this Node B.

Data Source

OMC-U Bulk CM

Source Field

un:nodeBFunctionIubLink

Source Section

NodeBFunction

RF_ChanElementUsage_DCH_Max

DCH Channel Element Usage - Max. For the UCU MRU within the Node B site with the highest DCH utilization, the maximum number of Channel Elements in use by 3GPP Release-1999 dedicated channels, expressed as a percentage of the pool of operational Channel Elements supporting 3GPP Release-1999 dedicated channels on that particular UCU MRU.

Data Source

NodeB

Source Field

VS.RF.ChanElementUsage.DCH.Max

Source Section

NodeBFunction

RF_ChanElementUsage_DCH_Mean

DCH Channel Element Usage - Mean. For the UCU MRU within the Node B site with the highest DCH allocation, the mean number of Channel Elements in use by 3GPP Release-1999 dedicated channels, expressed as a percentage of the pool of operational Channel Elements supporting 3GPP Release-1999 dedicated channels on that particular UCU MRU.

Data Source

NodeB

Source Field

VS.RF.ChanElementUsage.DCH.Mean

Source Section

NodeBFunction

RF_ChanElementUsage_Dedicated

The percentage of used dedicated CEs (channel elements) related to the number of available CEs

Data Source

NodeB

Source Field

VS.RF.ChanElementUsage.Dedicated

Source Section

Radio Resource PMs

RF_ChanElementUsage_EDCH_Max

EDCH Channel Element Usage - Max. For the UCU MRU within the Node B site with the highest E-DCH utilization, the maximum number of busy E-DCH Channel Elements, expressed as a percentage of the maximum number of operational Channel Elements supporting 3GPP Rel-6 E-DCH on that particular UCU MRU.

Data Source

NodeB

Source Field

VS.RF.ChanElementUsage.EDCH.Max

Source Section

NodeBFunction

RF_ChanElementUsage_EDCH_Mean

EDCH Channel Element Usage - Mean. For the UCU MRU within the Node B site with the highest E-DCH utilization, the mean number of busy E-DCH Channel Elements, expressed as a percentage of the maximum number of operational Channel Elements supporting 3GPP Rel-6 E-DCH on that particular UCU MRU.

Data Source

NodeB

Source Field

VS.RF.ChanElementUsage.EDCH.Mean

Source Section

NodeBFunction

RF_ChanElementUsage_HSDPA_Max

HSDPA Channel Element Usage - Max. For the UCU MRU within the Node B site with the highest HSDPA utilization, the maximum number of busy HSDPA Channel Elements, expressed as a percentage of the maximum number of operational Channel Elements supporting 3GPP Rel-5 HSDPA on that particular UCU MRU.

Data Source

NodeB

Source Field

VS.RF.ChanElementUsage.HSDPA.Max

Source Section

NodeBFunction

RF_ChanElementUsage_HSDPA_Mean

HSDPA Channel Element Usage - Mean. For the UCU MRU within the Node B site with the highest HSDPA utilization, the mean number of busy HSDPA Channel Elements, expressed as a percentage of the maximum number of operational Channel Elements supporting 3GPP Rel-5 HSDPA on that particular UCU MRU.

Data Source

NodeB

Source Field

VS.RF.ChanElementUsage.HSDPA.Mean

Source Section

NodeBFunction

RF_ChanElementUsage_Total

The percentage of used CEs (dedicated and common channel elements) from the available CEs.The CE usage gives an indication about the percentage of the NodeB capacity, which is currently in use

Data Source

NodeB

Source Field

VS.RF.ChanElementUsage.Total

Source Section

Radio Resource PMs

userLabel

A user-friendly (and user assigned) name of the associated object.

Data Source

OMC-U Bulk CM

Source Field

un:userLabel

Source Section

NodeBFunction

Passport Primitive Calculations

The following is a list of primitive calculations for the Passport entity.

GRAPHmultiLineSeparator

Special Control Field for Multi-Line Graphs

Calculation

```
""
```

NUMDAYS

of days in Report

Calculation

```
DAYSINREPORT()
```

NUMHOURS

of hours in Summation Data

Calculation

RNC Primitive Calculations

The following is a list of primitive calculations for the RNC entity.

_128_kbps_DL_Throughput_per_User

This KPI provides the throughput per User (active RAB) in downlink on 128 kbps RABs. The throughput is based on the RLC SDU layer.

Calculation

```
RLC_SDU_Throughput_DL_128_kbps_RAB * 1.0 / MeanNbrActRAB_PS128DL
```

_128_kbps_UL_Throughput_per_User

This KPI provides the throughput per User (active RAB) in uplink on 128 kbps RABs. The throughput is based on the RLC SDU layer.

Calculation

```
RLC_SDU_Throughput_UL_128_kbps_RAB * 1.0 / MeanNbrActRAB_PS128UL
```

_32_kbps_DL_Throughput_per_User

This KPI provides the throughput per User (active RAB) in downlink on 32 kbps RABs. The throughput is based on the RLC SDU layer.

Calculation

```
RLC_SDU_Throughput_DL_32_kbps_RAB * 1.0 / MeanNbrActRAB_PS32DL
```

_32_kbps_UL_Throughput_per_User

This KPI provides the throughput per User (active RAB) in uplink on 32 kbps RABs. The throughput is based on the RLC SDU layer.

Calculation

```
RLC_SDU_Throughput_UL_32_kbps_RAB * 1.0 / MeanNbrActRAB_PS32UL
```

_384_kbps_DL_Throughput_per_User

This KPI provides the throughput per User (active RAB) in downlink on 384 kbps RABs. The throughput is based on the RLC SDU layer.

Calculation

```
RLC_SDU_Throughput_DL_384_kbps_RAB * 1.0 / MeanNbrActRAB_PS384DL
```

_64_kbps_DL_Throughput_per_User

This KPI provides the throughput per User (active RAB) in downlink on 64 kbps RABs. The throughput is based on the RLC SDU layer.

Calculation

```
RLC_SDU_Throughput_DL_64_kbps_RAB * 1.0 / MeanNbrActRAB_PS64DL
```

_64_kbps_UL_Throughput_per_User

This KPI provides the throughput per User (active RAB) in uplink on 64 kbps RABs. The throughput is based on the RLC SDU layer.

Calculation

```
RLC_SDU_Throughput_UL_64_kbps_RAB * 1.0 / MeanNbrActRAB_PS64UL
```

DL_Mean_User_Data_Rate

This KPI is intened to measure the DL mean user data rate PS.

Calculation

```
NumUserBitsPsDL * 1.0 / Data_interval
```

DL_Net_User_Bits_on_Uu

This KPI is intened to measure the net user bits on Uu in the DL.

Calculation

```
vsum (NumUserBitsPsDL, -1.0 * NumUserBitsPsDiscardDL, 0)
```

DL_RLC_SDU_Throughput_for_QoS_Background

This KPI provides the throughput in downlink for class background on the RLC SDU layer. class background may be used with transport channel DCH or HSDSCH.

Calculation

```
vsum (NumUserBitsPSDL_Bgrd_HSDSCH, NumUserBitsPSDL_Bgrd_DCH, 0) * 0.001 /
Data_interval
```

DL_RLC_SDU_Throughput_for_QoS_Interactive

This KPI provides the throughput in downlink for class interactive on the RLC SDU layer. class interactive may be used with transport channel DCH or HSDSCH.

Calculation

```
vsum (NumUserBitsPSDL_Intact_HSDSCH, NumUserBitsPSDL_Intact_DCH, 0) * 0.001
/ Data_interval
```

DL_RLC_SDU_Throughput_for_QoS_Streaming

This KPI provides the throughput in downlink for class streaming on the RLC SDU layer. class streaming is always on DCH.

Calculation

```
NumUserBitsPSDL_Strm_DCH * 0.001 / Data_interval
```

GPS_Positioning_Results_Started_due_to_CS_Request_Failure_Rate_due_to_No_UE_Result

This KPI is intended to measure the failure rate of GPS Positioning Results Started due to CS Request which failed due to the fact that the UE didn't send a result.

Calculation

```
vsum (NumGPSPosAttCS, -1.0 * NumGPSPosSuccCS - NumGPSPosFailCS_SanCheck, 0)
* 100.0 / NumGPSPosAttCS
```

Updated: 2009-06-23

GPS_Positioning_Results_Started_due_to_CS_Request_Failure_Rate_due_to_Sanity_Check

This KPI is intended to measure the failure rate of GPS Positioning Results Started due to CS Request which failed due to Sanity Check.

Calculation

```
NumGPSPosFailCS_SanCheck * 100.0 / NumGPSPosAttCS
```

GPS_Positioning_Results_Started_due_to_CS_Request_Success_Rate

This KPI is intended to measure the GPS Positioning Results Started due to CS Request Success Rate.

Calculation

```
NumGPSPosSuccCS * 100.0 / NumGPSPosAttCS
```

GRAPHmultiLineSeparator

Special Control Field for Multi-Line Graphs

Calculation

```
""
```

HSDPA_Throughput_per_User

This KPI provides the throughput per User (active RAB) on any HSDPA RAB. The throughput is based on the RLC SDU layer.

Calculation

```
RLC_SDU_Throughput_HSDPA_RAB * 1.0 / Mean_Number_of_Active_HSDSCH_RABs
```

Iu_Connection_Success_Rate_CS

The Iu Connection Success Rate for Iu-cs is defined as the ratio between the Number of Successful Signalling Connection Establishments for the CS domain divided by the Number of Attempted Signalling Connection Establishments for the CS domain.

Calculation

```
NumSCCPConnSuccess_CS * 100.0 / NumSCCPConnAtt_CS
```

Iu_Connection_Success_Rate_PS

The Iu Connection Success Rate for Iu-ps is defined as the ratio between the Number of Successful Signalling Connection Establishments for the PS domain divided by the Number of Attempted Signalling Connection Establishments for the PS domain.

Calculation

```
NumSCCPConnSuccess_PS * 100.0 / NumSCCPConnAtt_PS
```

Mean_Number_of_Active_HSDSCH_RABs

This KPI provides the average number of active HSDSCH RABs.

Calculation

```
vsum (MeanNbrActRAB_Interact_HSDSCH, MeanNbrActRAB_Bgrd_HSDSCH, 0)
```

Mean_Number_of_Active_PS_DL_RABs

This KPI provides the average number of active PS DL RABs independent of transport channel type and data rate.

Calculation

```
vsum (MeanNbrActRAB_Interact_DCH, MeanNbrActRAB_Interact_HSDSCH,
MeanNbrActRAB_Bgrd_DCH, MeanNbrActRAB_Bgrd_HSDSCH, MeanNbrActRAB_Strm_DCH,
0)
```

Mean_Number_of_Active_PS_DL_RABs_on_DCH

This KPI provides the average number of active PS DL RABs on transport channel DCH independent of the data rate.

Calculation

```
vsum (MeanNbrActRAB_Interact_DCH, MeanNbrActRAB_Bgrd_DCH,
MeanNbrActRAB_Strm_DCH, 0)
```

Mean_Number_of_Active_RABs_All_Services

This KPI provides the average number of active RABs independent of service type. PS RABs are derived from the DL mean number of active RABs.

Calculation

```
NodeB.UtranCell.Mean_Number_of_Active_RABs_All_Services
```

MeanNbrActRAB_Bgrd_DCH

New name:RAB_MeanActive_Bgrd_DCH.Mean Number of Active DL RABs on DCH for QoS Class Background

Calculation

```
RAB_MeanActive_Bgrd_DCH
```

MeanNbrActRAB_Bgrd_HSDSCH

New name:RAB_MeanActive_Bgrd_HSDSCH.Mean Number of Active DL RABs on HSDSCH for QoS Class Background

Calculation

```
RAB_MeanActive_Bgrd_HSDSCH
```

MeanNbrActRAB_Interact_DCH

New name:RAB_MeanActive_Intact_DCH.Mean Number of Active DL RABs on DCH for QoS Class Interactive

Calculation

```
RAB_MeanActive_Intact_DCH
```

MeanNbrActRAB_Interact_HSDSCH

New name:RAB_MeanActive_Intact_HSDSCH.Mean Number of Active DL RABs on HSDSCH for QoS Class Interactive

Calculation

```
RAB_MeanActive_Intact_HSDSCH
```

MeanNbrActRAB_PS128DL

New name:RAB_MeanActive_PS128DL.Mean Number of Active RABs for DL Data Rate of 128 kbps

Calculation

```
RAB_MeanActive_PS128DL
```

MeanNbrActRAB_PS128UL

New name:RAB_MeanActive_PS128UL.Mean Number of Active RABs for UL Data Rate of 128 kbps

Calculation

```
RAB_MeanActive_PS128UL
```

MeanNbrActRAB_PS32DL

New name:RAB_MeanActive_PS32DL.Mean Number of Active RABs for DL Data Rate of 32 kbps

Calculation

```
RAB_MeanActive_PS32DL
```

MeanNbrActRAB_PS32UL

New name:RAB_MeanActive_PS32UL.Mean Number of Active RABs for UL Data Rate of 32 kbps

Calculation

```
RAB_MeanActive_PS32UL
```

MeanNbrActRAB_PS384DL

New name:RAB_MeanActive_PS384DL.Mean Number of Active RABs for DL Data Rate of 384 kbps

Calculation

```
RAB_MeanActive_PS384DL
```

MeanNbrActRAB_PS64DL

New name:RAB_MeanActive_PS64DL.Mean Number of Active RABs for DL Data Rate of 64 kbps

Calculation

```
RAB_MeanActive_PS64DL
```

MeanNbrActRAB_PS64UL

New name:RAB_MeanActive_PS64UL.Mean Number of Active RABs for UL Data Rate of 64 kbps

Calculation

```
RAB_MeanActive_PS64UL
```

MeanNbrActRAB_PS8DL

New name:RAB_MeanActive_PS8DL.Mean Number of Active RABs for DL Data Rate of 8 kbps

Calculation

```
RAB_MeanActive_PS8DL
```

MeanNbrActRAB_PS8UL

New name:RAB_MeanActive_PS8UL.Mean Number of Active RABs for UL Data Rate of 8 kbps

Calculation

```
RAB_MeanActive_PS8UL
```

MeanNbrActRAB_Strm_DCH

New name:RAB_MeanActive_Strm_DCH.Mean Number of Active DL RABs on DCH for QoS Class Streaming

Calculation

```
RAB_MeanActive_Strm_DCH
```

Number_of_CS_Initiated_Location_Attempts_started_by_other_Methods_than_GPS

This KPI is intended to measure the Number of CS initiated Location Attempts started by other Methods than GPS.

Calculation

```
vsum (NumLocAttCS, -1.0 * NumGPSPosAttCS, 0)
```

Number_of_Downlink_CS_Packets_Transmitted

This KPI represents the Number of Downlink CS Packets Transmitted.

Calculation

```
NumCsPacketIuupDL
```

Number_of_Uplink_CS_Packets_Transmitted

This KPI represents the Number of Uplink CS Packets Transmitted.

Calculation

```
NumCsPacketIuupUL
```

NumCsPacketIuupDL

New name:CSPacketIuupDL.Number of downlink packets received by the RNC from the MSC on the IU interface (Iu user plane)

Calculation

```
CSPacketIuupDL
```

NumCsPacketIuupUL

New name:CSPacketIuupUL.Number of Uplink packets transmitted by the RNC to the MSC on the IU interface (Iu user plane)

Calculation

```
CSPacketIuupUL
```

NUMDAYS

of days in Report

Calculation

```
DAYSINREPORT()
```

NUMHOURS

of hours in Summation Data

Calculation

NumRBReconfFail_CM

New name:CompMode_FailRBReconf.Number of Failed RB reconfigurations due to Compressed Mode

Calculation

```
CompMode_FailRBReconf
```

NumRBReconfFail_Non_Cell_FACH_UE

New name:UEStateTransFail_Non_Cell_FACH_UE.Number of Failed RB Reconfiguration Attempts due to UE non supporting Cell FACH

Calculation

```
UEStateTransFail_Non_Cell_FACH_UE
```

NumRBReconfigFail_Non_URA_PCH_UE

New name:UEStateTransFail_Non_URA_PCH_UE.Number of Failed RB Reconfiguration Attempts due to Non-URA_PCH UE detected

Calculation

```
UEStateTransFail_Non_URA_PCH_UE
```

NumRRCConnDrop_Period_UraUpdate

New name:MM_RRCConnDrop_Period_UraUpdate.Number of Dropped RRC Connections due to Failed Periodical URA Update

Calculation

```
MM_RRCConnDrop_Period_UraUpdate
```

NumRRCConnDrop_UTRANPagingFailure

New name:MM_RRCConnDrop_UTRANPagingFailure.Number of Dropped RRC Connections due to UTRAN Paging Failure

Calculation

```
MM_RRCConnDrop_UTRANPagingFailure
```

NumSCCPConnAtt_CS

New name:AttSCCPConn_CS.Number of Attempted Signalling Connection Establishments for CS domain

Calculation

```
AttSCCPConn_CS
```

NumSCCPConnAtt_PS

New name:AttSCCPConn_PS.Number of Attempted Signalling Connection Establishments for PS domain

Calculation

```
AttSCCPConn_PS
```

NumSCCPConnSuccess_CS

New name:SuccSCCPConn_CS.Number of Successful Signalling Connection Establishments for CS domain

Calculation

```
SuccSCCPConn_CS
```

NumSCCPConnSuccess_PS

New name:SuccSCCPConn_PS.Number of Successful Signalling Connection Establishments for PS domain

Calculation

```
SuccSCCPConn_PS
```

NumTransBlockErrUL_CSD

New name:ULTransBlockErr_CSD.Number of Errored Uplink Transport Blocks for CSD

Calculation

```
ULTransBlockErr_CSD
```

NumTransBlockErrUL_PS

New name:ULTransBlockErr_PS.Number of Errored Uplink Transport Blocks for PS

Calculation

```
ULTransBlockErr_PS
```

NumTransBlockTotUL_CSD

New name:ULTransBlock_CSD.Total Number of Uplink Transport Blocks for CSD. (Sum aggregation.)

Calculation

```
ULTransBlock_CSD
```

NumTransBlockTotUL_CSD_Avg

New name:ULTransBlock_CSD_Avg.Total Number of Uplink Transport Blocks for CSD. This peg provides Average aggregation for the NumTransBlockTotUL.CSD measurement.

Calculation

```
ULTransBlock_CSD_Avg
```

NumTransBlockTotUL_CSD_Max

New name:ULTransBlock_CSD_Max.Total Number of Uplink Transport Blocks for CSD. This peg provides Maximum aggregation for the NumTransBlockTotUL.CSD measurement.

Calculation

```
ULTransBlock_CSD_Max
```

NumTransBlockTotUL_CSD_SumMax

New name:ULTransBlock_CSD_SumMax.Total Number of Uplink Transport Blocks for CSD. This peg provides Sum across time and Maximum across elements aggregation for the NumTransBlockTotUL.CSD measurement.

Calculation

```
ULTransBlock_CSD_SumMax
```

NumTransBlockTotUL_PS

New name:ULTransBlock_PS.Total Number of Uplink Transport Blocks for PS. (Sum aggregation.)

Calculation

```
ULTransBlock_PS
```

NumTransBlockTotUL_PS_Avg

New name:ULTransBlock_PS_Avg.Total Number of Uplink Transport Blocks for PS. This peg provides Average aggregation for the NumTransBlockTotUL.PS measurement.

Calculation

```
ULTransBlock_PS_Avg
```

NumTransBlockTotUL_PS_Max

New name:ULTransBlock_PS_Max.Total Number of Uplink Transport Blocks for PS. This peg provides Maximum aggregation for the NumTransBlockTotUL.PS measurement.

Calculation

```
ULTransBlock_PS_Max
```

NumTransBlockTotUL_PS_SumMax

New name:ULTransBlock_PS_SumMax.Total Number of Uplink Transport Blocks for PS. This peg provides Sum across time and Maximum across elements aggregation for the NumTransBlockTotUL.PS measurement.

Calculation

```
ULTransBlock_PS_SumMax
```

PS_RAB_Cell_DCH_to_Active_Factor

This factor is used to calculate the difference between PS RABs being in Cell_DCH state and 'active' RABs', where active refers to data is actively transmitted on the RAB. The difference is based on the inactivity timer used in Cell_DCH, which is started on inactivity detection. On inactivity timer expiry the UE moves to Cell_FACH state.

Calculation

```
Mean_Number_of_Active_PS_DL_RABs * 1.0 / NodeB.Utran-
Cell.Mean_Number_of_PS_DL_RABs_in_Cell_DCH
```

Radio_Bearer_Reconfiguration_Success_Rate_due_to_Compressed_Mode

This KPI provides the percentage of successful performed RB reconfigurations due to Compressed Mode (CM) from UE point-of-view from the attempts.

Calculation

```
vsum (NumRBReconfAtt_CM, -1.0 * NumRBReconfFail_CM, 0) * 100.0 /
NumRBReconfAtt_CM
```

RLC_SDU_Throughput_DL_128_kbps_RAB

This KPI provides the throughput in downlink on 128 kbps RABs on the RLC SDU layer.

Calculation

```
NumUserBits_PS128DL * 0.001 / Data_interval
```

RLC_SDU_Throughput_DL_32_kbps_RAB

This KPI provides the throughput in downlink on 32 kbps RABs on the RLC SDU layer.

Calculation

```
NumUserBits_PS32DL * 0.001 / Data_interval
```

RLC_SDU_Throughput_DL_384_kbps_RAB

This KPI provides the throughput in downlink on 384 kbps RABs on the RLC SDU layer.

Calculation

```
NumUserBits_PS384DL * 0.001 / Data_interval
```

RLC_SDU_Throughput_DL_64_kbps_RAB

This KPI provides the throughput in downlink on 64 kbps RABs on the RLC SDU layer.

Calculation

```
NumUserBits_PS64DL * 0.001 / Data_interval
```

RLC_SDU_Throughput_DL_NonHSDPA_RAB

This KPI provides the throughput in downlink on non-HSDPA DL RABs on the RLC SDU layer.

Calculation

```
vsum (NumUserBitsPSDL_Intact_DCH, NumUserBitsPSDL_Bgrd_DCH,
NumUserBitsPSDL_Strm_DCH, 0) * 0.001 / Data_interval
```

RLC_SDU_Throughput_HSDPA_RAB

This KPI provides the throughput in downlink on any HSDPA RABs on the RLC SDU layer. HSDSCH transport channels may be used for class interactive or background.

Calculation

```
vsum (NumUserBitsPSDL_Intact_HSDSCH, NumUserBitsPSDL_Bgrd_HSDSCH, 0) *
0.001 / Data_interval
```

RLC_SDU_Throughput_UL_128_kbps_RAB

This KPI provides the throughput in uplink on 128 kbps RABs on the RLC SDU layer.

Calculation

```
NumUserBits_PS128UL * 0.001 / Data_interval
```

RLC_SDU_Throughput_UL_32_kbps_RAB

This KPI provides the throughput in uplink on 32 kbps RABs on the RLC SDU layer.

Calculation

```
NumUserBits_PS32UL * 0.001 / Data_interval
```

RLC_SDU_Throughput_UL_64_kbps_RAB

This KPI provides the throughput in uplink on 64 kbps RABs on the RLC SDU layer.

Calculation

```
NumUserBits_PS64UL * 0.001 / Data_interval
```

RRC_Connection_Drop_Rate_due_to_Failed_Periodic_URA_Update

This KPI provides the dropped RRC connection rate due to due to a failed periodical URA Update.

Calculation

```
NumRRCConnDrop_Period_UraUpdate * 100.0 / NodeB.Utran-
Cell.RRC_SuccConnEstab_sum
```

RRC_Connection_Drop_Rate_due_to_UTRAN_Paging_Failure

This KPI provides the dropped RRC connection rate due to a UE failing to respond to a UTRAN initiated Paging Procedure.

Calculation

```
NumRRCConnDrop_UTRANPagingFailure * 100.0 / NodeB.Utran-
Cell.RRC_SuccConnEstab_sum
```

Successful_Active_Set_Update_Addition_Rate

The 'Successful Active Set Update Addition Rate' provides the percentage of successful performed active set update procedures in the context to add / replace a radio link.

Calculation

```
vsum (NeighborRNC.Total_Number_of_Inter_RNC_SHO_Attempts, -1.0 * Neigh-
borRNC.Total_Number_of_Inter_RNC_SHO_Failures, NodeB.Utran-
Cell.Total_Number_of_Intra_RNC_SHO_Attempts, -1.0 *
NodeB.UtranCell.Total_Number_of_Intra_RNC_SHO_Failures, 0) * 100.0 / vsum
(NeighborRNC.Total_Number_of_Inter_RNC_SHO_Attempts, NodeB.Utran-
Cell.Total_Number_of_Intra_RNC_SHO_Attempts)
```

Total_DL_RLC_SDU_Throughput

This KPI provides the total throughput in downlink on HSDPA and non-HSDPA DL RABs on the RLC SDU layer.

Calculation

```
vsum (NumUserBitsPSDL_Intact_HSDSCH, NumUserBitsPSDL_Intact_DCH,
NumUserBitsPSDL_Bgrd_HSDSCH, NumUserBitsPSDL_Bgrd_DCH,
NumUserBitsPSDL_Strm_DCH, 0) * 0.001 / Data_interval
```

Total_Number_of_Uplink_Transport_Blocks

This KPI represents the total number od UL transport blocks. Whenever an uplink tranport block is received, the counter NumTransBlockTotUL is incremented. Calculated as a summation of all Transport Blocks received by MAC-d.

Calculation

```
NumTransBlockTotUL
```

Total_UL_RLC_SDU_Throughput

This KPI provides the total throughput in uplink on any UL RAB on the RLC SDU layer.

Calculation

```
vsum (NumUserBitsPSUL_Intact, NumUserBitsPSUL_Bgrd, NumUserBitsPSUL_Strm,
0) * 0.001 / Data_interval
```

UL_Mean_User_Data_Rate

This KPI is intened to measure the UL mean user data rate PS.

Calculation

```
vsum (NumUserBitsPSUL_Intact, NumUserBitsPSUL_Bgrd, NumUserBitsPSUL_Strm,
0) * 1.0 / Data_interval
```

UL_RLC_SDU_Throughput_for_QoS_Background

This KPI provides the throughput in uplink for class background on the RLC SDU layer.

Calculation

```
NumUserBitsPSUL_Bgrd * 0.001 / Data_interval
```

UL_RLC_SDU_Throughput_for_QoS_Interactive

This KPI provides the throughput in uplink for class interactive on the RLC SDU layer.

Calculation

```
NumUserBitsPSUL_Intact * 0.001 / Data_interval
```

UL_RLC_SDU_Throughput_for_QoS_Streaming

This KPI provides the throughput in uplink for class streaming on the RLC SDU layer.

Calculation

```
NumUserBitsPSUL_Strm * 0.001 / Data_interval
```

UL_Transport_Block_Error_Rate

The UL Transport BLER is the percentage of corrupted blocks received by the Serving RNC (after frame selection) over the total number of blocks received (after frame selection).

Calculation

```
NumTransBlockErrUL * 100.0 / NumTransBlockTotUL
```

UL_Transport_Block_Error_Rate_CSD

The CS Data UL Transport BLER is the percentage of corrupted CSD transport blocks received by the Serving RNC (after frame selection) over the number of CSD transport blocks received (after frame selection).

Calculation

```
NumTransBlockErrUL_CSD * 100.0 / NumTransBlockTotUL_CSD
```

UL_Transport_Block_Error_Rate_CSV

The CS Voice UL Transport BLER is the percentage of corrupted CSV transport blocks received by the Serving RNC (after frame selection) over the number of CSV transport blocks received (after frame selection).

Calculation

```
NumTransBlockErrUL_CSV * 100.0 / NumTransBlockTotUL_CSV
```

UL_Transport_Block_Error_Rate_PS

The PS UL Transport BLER is the percentage of corrupted PS transport blocks received by the Serving RNC (after frame selection) over the number of PS transport blocks received (after frame selection).

Calculation

```
NumTransBlockErrUL_PS * 100.0 / NumTransBlockTotUL_PS
```

RNC Peg Counts

The following is a list of peg counts for the RNC entity.

ActiveSetUpdatePerRnc

Number of active set update per RNC. (ActiveSetUpdatePerRnc)

Data Source

RNC C-Node

Source Field

VS.ActiveSetUpdatePerRnc

Source Section

RncEquipment

AmrRabModSucc

Number of successful AMR RAB modifications (AmrRabModSucc)

Data Source

RNC C-Node

Source Field

VS.AmrRabModSucc

Source Section

RncEquipment

AmrRabModUnsucc

Number of unsuccessful AMR RAB modifications (AmrRabModUnsucc)

Data Source

RNC C-Node

Source Field

VS.AmrRabModUnsucc

Source Section

RncEquipment

AmrWbRabModSucc

Number of successful AMR WB RAB modifications (AmrWbRabModSucc)

Data Source

RNC C-Node

Source Field

VS.AmrWbRabModSucc

Source Section

RncEquipment

AmrWbRabModUnsucc

Number of unsuccessful AMR WB RAB modifications (AmrWbRabModUnsucc)

Data Source

RNC C-Node

Source Field

VS.AmrWbRabModUnsucc

Source Section

RncEquipment

AttSCCPConn_CS

Number of Attempted Signalling Connection Establishments for CS domain

Data Source

RNC

Source Field

VS.AttSCCPConn.CS

Source Section

RNC Measurements on Iu Interface

AttSCCPConn_PS

Number of Attempted Signalling Connection Establishments for PS domain

Data Source

RNC

Source Field

VS.AttSCCPConn.PS

Source Section

RNC Measurements on Iu Interface

CmActivationFailureGSM

Number of failed Compressed Mode activations (GSM)

Data Source

RNC C-Node

Source Field

VS.CmActivationFailure.GSM

Source Section

RncEquipment

CmActivationFailureGSMAndInterFrequency

Number of failed Compressed Mode activations (GSMAndInterFrequency)

Data Source

RNC C-Node

Source Field

VS.CmActivationFailure.GSMAndInterFrequency

Source Section

RncEquipment

CmActivationFailureInterFrequency

Number of failed Compressed Mode activations (InterFrequency)

Data Source

RNC C-Node

Source Field

VS.CmActivationFailure.InterFrequency

Source Section

RncEquipment

CmActivationSuccessGSM

Number of successful Compressed Mode activations (GSM)

Data Source

RNC C-Node

Source Field

VS.CmActivationSuccess.GSM

Source Section

RncEquipment

CmActivationSuccessGSMAndInterFrequency

Number of successful Compressed Mode activations (GSMAndInterFrequency)

Data Source

RNC C-Node

Source Field

VS.CmActivationSuccess.GSMAndInterFrequency

Source Section

RncEquipment

CmActivationSuccessInterFrequency

Number of successful Compressed Mode activations (InterFrequency)

Data Source

RNC C-Node

Source Field

VS.CmActivationSuccess.InterFrequency

Source Section

RncEquipment

CmConfigurationFailureGSM

Number of Compressed Mode configuration failures (GSM)

Data Source

RNC C-Node

Source Field

VS.CmConfigurationFailure.GSM

Source Section

RncEquipment

CmConfigurationFailureGsmAndInterFrequency

Number of Compressed Mode configuration failures (GsmAndInterFrequency)

Data Source

RNC C-Node

Source Field

VS.CmConfigurationFailure.GsmAndInterFrequency

Source Section

RncEquipment

CmConfigurationFailureInterFrequency

Number of Compressed Mode configuration failures (InterFrequency)

Data Source

RNC C-Node

Source Field

VS.CmConfigurationFailure.InterFrequency

Source Section

RncEquipment

CmConfigurationSuccessGSM

Number of Compressed Mode configuration success. (GSM)

Data Source

RNC C-Node

Source Field

VS.CmConfigurationSuccess.GSM

Source Section

RncEquipment

CmConfigurationSuccessGsmAndInterFrequency

Number of Compressed Mode configuration success. (GsmAndInterFrequency)

Data Source

RNC C-Node

Source Field

VS.CmConfigurationSuccess.GsmAndInterFrequency

Source Section

RncEquipment

CmConfigurationSuccessInterFrequency

Number of Compressed Mode configuration success. (InterFrequency)

Data Source

RNC C-Node

Source Field

VS.CmConfigurationSuccess.InterFrequency

Source Section

RncEquipment

CompMode_AttRBReconfig

Number of Attempted RB reconfigurations due to Compressed Mode

Data Source

RNC

Source Field

VS.CompMode.AttRBReconfig

Source Section

Compressed Mode Performance Measurements

CompMode_FailRBReconf

Number of Failed RB reconfigurations due to Compressed Mode

Data Source

RNC

Source Field

VS.CompMode.FailRBReconf

Source Section

Compressed Mode Performance Measurements

CsLocationReportingControlDefaultLs

Number of RANAP location reporting control messages for service area purpose issued by the CS domain and served with a default location service (CsLocationReportingControlDefaultLs)

Data Source

RNC C-Node

Source Field

VS.CsLocationReportingControlDefaultLs

Source Section

RncEquipment

CsLocationReportingControlGeoLs

Number of RANAP location reporting control messages for geographical area purpose issued by the CS domain and served with a geographical location service (CsLocationReportingControlGeoLs)

Data Source

RNC C-Node

Source Field

VS.CsLocationReportingControlGeoLs

Source Section

RncEquipment

CsLocationReportSuccessGeoLsOutsideQosCellId

Number of RANAP location report messages for geographical area purpose sent to the CS domain served with a geographical location service and which do not satisfy the requested QoS. (CellId)

Data Source

RNC C-Node

Source Field

VS.CsLocationReportSuccessGeoLsOutsideQos.CellId

Source Section

RncEquipment

CsLocationReportSuccessGeoLsOutsideQosCIDRTT

Number of RANAP location report messages for geographical area purpose sent to the CS domain served with a geographical location service and which do not satisfy the requested QoS. (CIDRTT)

Data Source

RNC C-Node

Source Field

VS.CsLocationReportSuccessGeoLsOutsideQos.CIDRTT

Source Section

RncEquipment

CsLocationReportSuccessGeoLsOutsideQosUeBasedAgps

Number of RANAP location report messages for geographical area purpose sent to the CS domain served with a geographical location service and which do not satisfy the requested QoS. (UeBasedAgps)

Data Source

RNC C-Node

Source Field

VS.CsLocationReportSuccessGeoLsOutsideQos.UeBasedAgps

Source Section

RncEquipment

CsLocationReportSuccessGeoLsWithinQoSCellId

Number of RANAP location report messages for geographical area purpose sent to the CS domain served with a geographical location service and which satisfy the requested QoS. (CellId)

Data Source

RNC C-Node

Source Field

VS.CsLocationReportSuccessGeoLsWithinQoS.CellId

Source Section

RncEquipment

CsLocationReportSuccessGeoLsWithinQoSCIDRTT

Number of RANAP location report messages for geographical area purpose sent to the CS domain served with a geographical location service and which satisfy the requested QoS. (CIDRTT)

Data Source

RNC C-Node

Source Field

VS.CsLocationReportSuccessGeoLsWithinQoS.CIDRTT

Source Section

RncEquipment

CsLocationReportSuccessGeoLsWithinQoSUeBasedAgps

Number of RANAP location report messages for geographical area purpose sent to the CS domain served with a geographical location service and which satisfy the requested QoS. (UeBasedAgps)

Data Source

RNC C-Node

Source Field

VS.CsLocationReportSuccessGeoLsWithinQoS.UeBasedAgps

Source Section

RncEquipment

CsLocationReportSuccessSaLs

Number of RANAP location report messages for service area purpose sent to the CS domain and served with a default location service (CsLocationReportSuccessSaLs)

Data Source

RNC C-Node

Source Field

VS.CsLocationReportSuccessSaLs

Source Section

RncEquipment

CsLocationReportUnsuccessGeoLsAbortProcedure

Number of RANAP location report messages for geographical area purpose sent to the CS domain, failed and that were supposed to be served with a geographical location service (AbortProcedure)

Data Source

RNC C-Node

Source Field

VS.CsLocationReportUnsuccessGeoLs.AbortProcedure

Source Section

RncEquipment

CsLocationReportUnsuccessGeoLsDistantCellInfoNotFound

Number of RANAP location report messages for geographical area purpose sent to the CS domain, failed and that were supposed to be served with a geographical location service (DistantCellInfoNotFound)

Data Source

RNC C-Node

Source Field

VS.CsLocationReportUnsuccessGeoLs.DistantCellInfoNotFound

Source Section

RncEquipment

CsLocationReportUnsuccessGeoLsLocalCellInfoNotFound

Number of RANAP location report messages for geographical area purpose sent to the CS domain, failed and that were supposed to be served with a geographical location service (LocalCellInfoNotFound)

Data Source

RNC C-Node

Source Field

VS.CsLocationReportUnsuccessGeoLs.LocalCellInfoNotFound

Source Section

RncEquipment

CsLocationReportUnsuccessGeoLsRelocationProcedure

Number of RANAP location report messages for geographical area purpose sent to the CS domain, failed and that were supposed to be served with a geographical location service (RelocationProcedure)

Data Source

RNC C-Node

Source Field

VS.CsLocationReportUnsuccessGeoLs.RelocationProcedure

Source Section

RncEquipment

CsLocationReportUnsuccessGeoLsUnknown

Number of RANAP location report messages for geographical area purpose sent to the CS domain, failed and that were supposed to be served with a geographical location service (Unknown)

Data Source

RNC C-Node

Source Field

VS.CsLocationReportUnsuccessGeoLs.Unknown

Source Section

RncEquipment

CsLocationReportUnsuccessSaLsDistantCellInfoNotFound

Number of RANAP location report messages for service area purpose sent to the CS domain, failed and that was supposed to be served by a default location service (DistantCellInfoNotFound)

Data Source

RNC C-Node

Source Field

VS.CsLocationReportUnsuccessSaLs.DistantCellInfoNotFound

Source Section

RncEquipment

CsLocationReportUnsuccessSaLsLocalCellInfoNotFound

Number of RANAP location report messages for service area purpose sent to the CS domain, failed and that was supposed to be served by a default location service (LocalCellInfoNotFound)

Data Source

RNC C-Node

Source Field

VS.CsLocationReportUnsuccessSaLs.LocalCellInfoNotFound

Source Section

RncEquipment

CsLocationReportUnsuccessSaLsUnknown

Number of RANAP location report messages for service area purpose sent to the CS domain, failed and that was supposed to be served by a default location service (Unknown)

Data Source

RNC C-Node

Source Field

VS.CsLocationReportUnsuccessSaLs.Unknown

Source Section

RncEquipment

CsLocationUebasedAgpsSuccess

Number of successful location estimations using UE based A-GPS method for CS domain. (CsLocationUebasedAgpsSuccess)

Data Source

RNC C-Node

Source Field

VS.CsLocationUebasedAgpsSuccess

Source Section

RncEquipment

CsLocationUebasedAgpsUnsuccessAgpsUEbasedTooLong

Number of failed location of the UE using the UE-based AGPS method for CS domain. (AgpsUEbasedTooLong)

Data Source

RNC C-Node

Source Field

VS.CsLocationUebasedAgpsUnsuccess.AgpsUEbasedTooLong

Source Section

RncEquipment

CsLocationUebasedAgpsUnsuccessIsmlcAssDataTooLong

Number of failed location of the UE using the UE-based AGPS method for CS domain. (IsmlcAssDataTooLong)

Data Source

RNC C-Node

Source Field

VS.CsLocationUebasedAgpsUnsuccess.IsmlcAssDataTooLong

Source Section

RncEquipment

CsLocationUebasedAgpsUnsuccessOther

Number of failed location of the UE using the UE-based AGPS method for CS domain. (Other)

Data Source

RNC C-Node

Source Field

VS.CsLocationUebasedAgpsUnsuccess.Other

Source Section

RncEquipment

CsLocationUebasedAgpsUnsuccessSasPcapFailure

Number of failed location of the UE using the UE-based AGPS method for CS domain. (SasPcapFailure)

Data Source

RNC C-Node

Source Field

VS.CsLocationUebasedAgpsUnsuccess.SasPcapFailure

Source Section

RncEquipment

CsLocationUebasedAgpsUnsuccessSasServicesNotAvailable

Number of failed location of the UE using the UE-based AGPS method for CS domain. (SasServicesNotAvailable)

Data Source

RNC C-Node

Source Field

VS.CsLocationUebasedAgpsUnsuccess.SasServicesNotAvailable

Source Section

RncEquipment

CsLocationUebasedAgpsUnsuccessUePositioningError

Number of failed location of the UE using the UE-based AGPS method for CS domain. (UePositioningError)

Data Source

RNC C-Node

Source Field

VS.CsLocationUebasedAgpsUnsuccess.UePositioningError

Source Section

RncEquipment

CSPacketIuupDL

Number of downlink packets received by the RNC from the MSC on the IU interface (Iu user plane)

Data Source

RNC

Source Field

VS.CSPacketIuupDL

Source Section

CS Packets

CSPacketIuupUL

Number of Uplink packets transmitted by the RNC to the MSC on the IU interface (Iu user plane)

Data Source

RNC

Source Field

VS.CSPacketIuupUL

Source Section

CS Packets

Data_interval

Data interval for the RNC data collection in seconds. It is taken from the relevant <gp> tag in the RNC XML data file.

Data Source

RNC

Source Field

<gp> tag

DataRate_PS128DL

Data Rate for PS RABs with DL 128 kbps

Data Source

RNC

Source Field

VS.DataRate.PS128DL

Source Section

Downlink Data Rates / User Bits

DataRate_PS128DL_Avg

Data Rate for PS RABs with DL 128 kbps. This peg provides Average aggregation for the measurement.

Data Source

RNC

Source Field

VS.DataRate.PS128DL

Source Section

Downlink Data Rates / User Bits

DataRate_PS128DL_Max

Data Rate for PS RABs with DL 128 kbps. This peg provides Maximum aggregation for the measurement.

Data Source

RNC

Source Field

VS.DataRate.PS128DL

Source Section

Downlink Data Rates / User Bits

DataRate_PS128DL_SumMax

Data Rate for PS RABs with DL 128 kbps. This peg provides Sum across time and Maximum across elements aggregation for the measurement.

Data Source

RNC

Source Field

VS.DataRate.PS128DL

Source Section

Downlink Data Rates / User Bits

DataRate_PS128UL

Data Rate for PS RABs with UL 128 kbps

Data Source

RNC

Source Field

VS.DataRate.PS128UL

Source Section

Uplink Data Rates / User Bits

DataRate_PS128UL_Avg

Data Rate for PS RABs with UL 128 kbps. This peg provides Average aggregation for the measurement.

Data Source

RNC

Source Field

VS.DataRate.PS128UL

Source Section

Uplink Data Rates / User Bits

DataRate_PS128UL_Max

Data Rate for PS RABs with UL 128 kbps. This peg provides Maximum aggregation for the measurement.

Data Source

RNC

Source Field

VS.DataRate.PS128UL

Source Section

Uplink Data Rates / User Bits

DataRate_PS128UL_SumMax

Data Rate for PS RABs with UL 128 kbps. This peg provides Sum across time and Maximum across elements aggregation for the measurement.

Data Source

RNC

Source Field

VS.DataRate.PS128UL

Source Section

Uplink Data Rates / User Bits

DataRate_PS16DL

Data Rate for PS RABs with DL 16 kbps

Data Source

RNC

Source Field

VS.DataRate.PS16DL

Source Section

Downlink Data Rates / User Bits

DataRate_PS16DL_Avg

Data Rate for PS RABs with DL 16 kbps. This peg provides Average aggregation for the measurement.

Data Source

RNC

Source Field

VS.DataRate.PS16DL

Source Section

Downlink Data Rates / User Bits

DataRate_PS16DL_Max

Data Rate for PS RABs with DL 16 kbps. This peg provides Maximum aggregation for the measurement.

Data Source

RNC

Source Field

VS.DataRate.PS16DL

Source Section

Downlink Data Rates / User Bits

DataRate_PS16DL_SumMax

Data Rate for PS RABs with DL 16 kbps. This peg provides Sum across time and Maximum across elements aggregation for the measurement.

Data Source

RNC

Source Field

VS.DataRate.PS16DL

Source Section

Downlink Data Rates / User Bits

DataRate_PS16UL

Data Rate for PS RABs with UL 16 kbps

Data Source

RNC

Source Field

VS.DataRate.PS16UL

Source Section

Uplink Data Rates / User Bits

DataRate_PS16UL_Avg

Data Rate for PS RABs with UL 16 kbps. This peg provides Average aggregation for the measurement.

Data Source

RNC

Source Field

VS.DataRate.PS16UL

Source Section

Uplink Data Rates / User Bits

DataRate_PS16UL_Max

Data Rate for PS RABs with UL 16 kbps. This peg provides Maximum aggregation for the measurement.

Data Source

RNC

Source Field

VS.DataRate.PS16UL

Source Section

Uplink Data Rates / User Bits

DataRate_PS16UL_SumMax

Data Rate for PS RABs with UL 16 kbps. This peg provides Sum across time and Maximum across elements aggregation for the measurement.

Data Source

RNC

Source Field

VS.DataRate.PS16UL

Source Section

Uplink Data Rates / User Bits

DataRate_PS32DL

Data Rate for PS RABs with DL 32 kbps

Data Source

RNC

Source Field

VS.DataRate.PS32DL

Source Section

Downlink Data Rates / User Bits

DataRate_PS32DL_Avg

Data Rate for PS RABs with DL 32 kbps. This peg provides Average aggregation for the measurement.

Data Source

RNC

Source Field

VS.DataRate.PS32DL

Source Section

Downlink Data Rates / User Bits

DataRate_PS32DL_Max

Data Rate for PS RABs with DL 32 kbps. This peg provides Maximum aggregation for the measurement.

Data Source

RNC

Source Field

VS.DataRate.PS32DL

Source Section

Downlink Data Rates / User Bits

DataRate_PS32DL_SumMax

Data Rate for PS RABs with DL 32 kbps. This peg provides Sum across time and Maximum across elements aggregation for the measurement.

Data Source

RNC

Source Field

VS.DataRate.PS32DL

Source Section

Downlink Data Rates / User Bits

DataRate_PS32UL

Data Rate for PS RABs with UL 32 kbps

Data Source

RNC

Source Field

VS.DataRate.PS32UL

Source Section

Uplink Data Rates / User Bits

DataRate_PS32UL_Avg

Data Rate for PS RABs with UL 32 kbps. This peg provides Average aggregation for the measurement.

Data Source

RNC

Source Field

VS.DataRate.PS32UL

Source Section

Uplink Data Rates / User Bits

DataRate_PS32UL_Max

Data Rate for PS RABs with UL 32 kbps. This peg provides Maximum aggregation for the measurement.

Data Source

RNC

Source Field

VS.DataRate.PS32UL

Source Section

Uplink Data Rates / User Bits

DataRate_PS32UL_SumMax

Data Rate for PS RABs with UL 32 kbps. This peg provides Sum across time and Maximum across elements aggregation for the measurement.

Data Source

RNC

Source Field

VS.DataRate.PS32UL

Source Section

Uplink Data Rates / User Bits

DataRate_PS384DL

Data Rate for PS RABs with DL 384 kbps

Data Source

RNC

Source Field

VS.DataRate.PS384DL

Source Section

Downlink Data Rates / User Bits

DataRate_PS384DL_Avg

Data Rate for PS RABs with DL 384 kbps. This peg provides Average aggregation for the measurement.

Data Source

RNC

Source Field

VS.DataRate.PS384DL

Source Section

Downlink Data Rates / User Bits

DataRate_PS384DL_Max

Data Rate for PS RABs with DL 384 kbps. This peg provides Maximum aggregation for the measurement.

Data Source

RNC

Source Field

VS.DataRate.PS384DL

Source Section

Downlink Data Rates / User Bits

DataRate_PS384DL_SumMax

Data Rate for PS RABs with DL 384 kbps. This peg provides Sum across time and Maximum across elements aggregation for the measurement.

Data Source

RNC

Source Field

VS.DataRate.PS384DL

Source Section

Downlink Data Rates / User Bits

DataRate_PS384UL

Data Rate for PS RABs with UL 384 kbps

Data Source

RNC

Source Field

VS.DataRate.PS384UL

Source Section

Uplink Data Rates / User Bits

DataRate_PS384UL_Avg

Data Rate for PS RABs with UL 384 kbps. This peg provides Average aggregation for the measurement.

Data Source

RNC

Source Field

VS.DataRate.PS384UL

Source Section

Uplink Data Rates / User Bits

DataRate_PS384UL_Max

Data Rate for PS RABs with UL 384 kbps. This peg provides Maximum aggregation for the measurement.

Data Source

RNC

Source Field

VS.DataRate.PS384UL

Source Section

Uplink Data Rates / User Bits

DataRate_PS384UL_SumMax

Data Rate for PS RABs with UL 384 kbps. This peg provides Sum across time and Maximum across elements aggregation for the measurement.

Data Source

RNC

Source Field

VS.DataRate.PS384UL

Source Section

Uplink Data Rates / User Bits

DataRate_PS64DL

Data Rate for PS RABs with DL 64 kbps

Data Source

RNC

Source Field

VS.DataRate.PS64DL

Source Section

Downlink Data Rates / User Bits

DataRate_PS64DL_Avg

Data Rate for PS RABs with DL 64 kbps. This peg provides Average aggregation for the measurement.

Data Source

RNC

Source Field

VS.DataRate.PS64DL

Source Section

Downlink Data Rates / User Bits

DataRate_PS64DL_Max

Data Rate for PS RABs with DL 64 kbps. This peg provides Maximum aggregation for the measurement.

Data Source

RNC

Source Field

VS.DataRate.PS64DL

Source Section

Downlink Data Rates / User Bits

DataRate_PS64DL_SumMax

Data Rate for PS RABs with DL 64 kbps. This peg provides Sum across time and Maximum across elements aggregation for the measurement.

Data Source

RNC

Source Field

VS.DataRate.PS64DL

Source Section

Downlink Data Rates / User Bits

DataRate_PS64UL

Data Rate for PS RABs with UL 64 kbps

Data Source

RNC

Source Field

VS.DataRate.PS64UL

Source Section

Uplink Data Rates / User Bits

DataRate_PS64UL_Avg

Data Rate for PS RABs with UL 64 kbps. This peg provides Average aggregation for the measurement.

Data Source

RNC

Source Field

VS.DataRate.PS64UL

Source Section

Uplink Data Rates / User Bits

DataRate_PS64UL_Max

Data Rate for PS RABs with UL 64 kbps. This peg provides Maximum aggregation for the measurement.

Data Source

RNC

Source Field

VS.DataRate.PS64UL

Source Section

Uplink Data Rates / User Bits

DataRate_PS64UL_SumMax

Data Rate for PS RABs with UL 64 kbps. This peg provides Sum across time and Maximum across elements aggregation for the measurement.

Data Source

RNC

Source Field

VS.DataRate.PS64UL

Source Section

Uplink Data Rates / User Bits

DataRate_PSDL_Bgrd_DiscardWRED

Number of DL Background data rate discarded by Weighted Random Early Discard across the Traffic Processors of the RNC due to Processor Congestion over the granularity period.

Data Source

RNC

Source Field

VS.DataRate.PSDL.Bgrd.DiscardWRED

Source Section

Discarded Data by WRED

DataRate_PSDL_IntAct_DiscardWRED

Number of DL Interactive data rate discarded by Weighted Random Early Discard across the Traffic Processors of the RNC due to Processor Congestion over the granularity period.

Data Source

RNC

Source Field

VS.DataRate.PSDL.IntAct.DiscardWRED

Source Section

Discarded Data by WRED

DataRate_PSDL_Strm_DiscardWRED

Number of DL Streaming data rate discarded by Weighted Random Early Discard across the Traffic Processors of the RNC due to Processor Congestion over the granularity period.

Data Source

RNC

Source Field

VS.DataRate.PSDL.Strm.DiscardWRED

Source Section

Discarded Data by WRED

DataRate_PSDLBgrd_DCH

DL Data Rate for PS QoS class background mapped on on DCH

Data Source

RNC

Source Field

VS.DataRate.PSDLBgrd.DCH

Source Section

Downlink Data Rates / User Bits

DataRate_PSDLBgrd_DCH_Avg

DL Data Rate for PS QoS class background mapped on on DCH. This peg provides Average aggregation for the measurement.

Data Source

RNC

Source Field

VS.DataRate.PSDLBgrd.DCH

Source Section

Downlink Data Rates / User Bits

DataRate_PSDLBgrd_DCH_Max

DL Data Rate for PS QoS class background mapped on on DCH. This peg provides Maximum aggregation for the measurement.

Data Source

RNC

Source Field

VS.DataRate.PSDLBgrd.DCH

Source Section

Downlink Data Rates / User Bits

DataRate_PSDLBgrd_DCH_SumMax

DL Data Rate for PS QoS class background mapped on on DCH. This peg provides Sum across time and Maximum across elements aggregation for the measurement.

Data Source

RNC

Source Field

VS.DataRate.PSDLBgrd.DCH

Source Section

Downlink Data Rates / User Bits

DataRate_PSDLBgrd_HSDSCH

DL Data Rate for QoS class background mapped on HS-DSCH

Data Source

RNC

Source Field

VS.DataRate.PSDLBgrd.HSDSCH

Source Section

Downlink Data Rates / User Bits

DataRate_PSDLBgrd_HSDSCH_Avg

DL Data Rate for QoS class background mapped on HS-DSCH. This peg provides Average aggregation for the measurement.

Data Source

RNC

Source Field

VS.DataRate.PSDLBgrd.HSDSCH

Source Section

Downlink Data Rates / User Bits

DataRate_PSDLBgrd_HSDSCH_Max

DL Data Rate for QoS class background mapped on HS-DSCH. This peg provides Maximum aggregation for the measurement.

Data Source

RNC

Source Field

VS.DataRate.PSDLBgrd.HSDSCH

Source Section

Downlink Data Rates / User Bits

DataRate_PSDLBgrd_HSDSCH_SumMax

DL Data Rate for QoS class background mapped on HS-DSCH. This peg provides Sum across time and Maximum across elements aggregation for the measurement.

Data Source

RNC

Source Field

VS.DataRate.PSDLBgrd.HSDSCH

Source Section

Downlink Data Rates / User Bits

DataRate_PSDLIntact_DCH

DL Data Rate for PS QoS class interactive mapped on DCH

Data Source

RNC

Source Field

VS.DataRate.PSDLIntact.DCH

Source Section

Downlink Data Rates / User Bits

DataRate_PSDLIntact_DCH_Avg

DL Data Rate for PS QoS class interactive mapped on DCH. This peg provides Average aggregation for the measurement.

Data Source

RNC

Source Field

VS.DataRate.PSDLIntact.DCH

Source Section

Downlink Data Rates / User Bits

DataRate_PSDLIntact_DCH_Max

DL Data Rate for PS QoS class interactive mapped on DCH. This peg provides Maximum aggregation for the measurement.

Data Source

RNC

Source Field

VS.DataRate.PSDLIntact.DCH

Source Section

Downlink Data Rates / User Bits

DataRate_PSDLIntact_DCH_SumMax

DL Data Rate for PS QoS class interactive mapped on DCH. This peg provides Sum across time and Maximum across elements aggregation for the measurement.

Data Source

RNC

Source Field

VS.DataRate.PSDLIntact.DCH

Source Section

Downlink Data Rates / User Bits

DataRate_PSDLIntact_HSDSCH

DL Data Rate for QoS class interactive mapped on HS-DSCH

Data Source

RNC

Source Field

VS.DataRate.PSDLIntact.HSDSCH

Source Section

Downlink Data Rates / User Bits

DataRate_PSDLIntact_HSDSCH_Avg

DL Data Rate for QoS class interactive mapped on HS-DSCH. This peg provides Average aggregation for the measurement.

Data Source

RNC

Source Field

VS.DataRate.PSDLIntact.HSDSCH

Source Section

Downlink Data Rates / User Bits

DataRate_PSDLIntact_HSDSCH_Max

DL Data Rate for QoS class interactive mapped on HS-DSCH. This peg provides Maximum aggregation for the measurement.

Data Source

RNC

Source Field

VS.DataRate.PSDLIntact.HSDSCH

Source Section

Downlink Data Rates / User Bits

DataRate_PSDLIntact_HSDSCH_SumMax

DL Data Rate for QoS class interactive mapped on HS-DSCH. This peg provides Sum across time and Maximum across elements aggregation for the measurement.

Data Source

RNC

Source Field

VS.DataRate.PSDLIntact.HSDSCH

Source Section

Downlink Data Rates / User Bits

DataRate_PSDLStrm_DCH

DL Data Rate for QoS Class 'Streaming' mapped on DCH

Data Source

RNC

Source Field

VS.DataRate.PSDLStrm.DCH

Source Section

Downlink Data Rates / User Bits

DataRate_PSDLStrm_DCH_Avg

DL Data Rate for QoS Class 'Streaming' mapped on DCH. This peg provides Average aggregation for the measurement.

Data Source

RNC

Source Field

VS.DataRate.PSDLStrm.DCH

Source Section

Downlink Data Rates / User Bits

DataRate_PSDLStrm_DCH_Max

DL Data Rate for QoS Class 'Streaming' mapped on DCH. This peg provides Maximum aggregation for the measurement.

Data Source

RNC

Source Field

VS.DataRate.PSDLStrm.DCH

Source Section

Downlink Data Rates / User Bits

DataRate_PSDLStrm_DCH_SumMax

DL Data Rate for QoS Class 'Streaming' mapped on DCH. This peg provides Sum across time and Maximum across elements aggregation for the measurement.

Data Source

RNC

Source Field

VS.DataRate.PSDLStrm.DCH

Source Section

Downlink Data Rates / User Bits

DataRate_PSDLStrm_HSDSCH

This measurement provides the DL throughput for QoS class streaming mapped on HSDSCH.

Data Source

RNC

Source Field

VS.DataRate.PSDLStrm.HSDSCH

Source Section

Downlink Data Rates / User Bits

DataRate_PSUL_Bgrd_DiscardWRED

Number of UL Background data rate discarded by Weighted Random Early Discard across the Traffic Processors of the RNC due to Processor Congestion over the granularity period.

Data Source

RNC

Source Field

VS.DataRate.PSUL.Bgrd.DiscardWRED

Source Section

Discarded Data by WRED

DataRate_PSUL_IntAct_DiscardWRED

Number of UL Interactive data rate discarded by Weighted Random Early Discard across the Traffic Processors of the RNC due to Processor Congestion over the granularity period.

Data Source

RNC

Source Field

VS.DataRate.PSUL.IntAct.DiscardWRED

Source Section

Discarded Data by WRED

DataRate_PSUL_Strm_DiscardWRED

Number of UL Streaming data rate discarded by Weighted Random Early Discard across the Traffic Processors of the RNC due to Processor Congestion over the granularity period.

Data Source

RNC

Source Field

VS.DataRate.PSUL.Strm.DiscardWRED

Source Section

Discarded Data by WRED

DataRate_PSULBgrd

Renamed 4.3.7.0.10 - new name:DataRate_PSULBgrd_DCH. UL Data Rate for PS QoS class background

Data Source

RNC

Source Field

VS.DataRate.PSULBgrd

Source Section

Uplink Data Rates / User Bits

DataRate_PSULBgrd_Avg

Renamed 4.3.7.0.10 - new name:DataRate_PSULBgrd_DCH_Avg. UL Data Rate for PS QoS class background. This peg provides Average aggregation for the measurement.

Data Source

RNC

Source Field

VS.DataRate.PSULBgrd

Source Section

Uplink Data Rates / User Bits

DataRate_PSULBgrd_DCH

UL Data Rate for PS QoS class background mapped on DCH (kbps)

Data Source

RNC

Source Field

VS.DataRate.PSULBgrd.DCH

Source Section

RncFunction

DataRate_PSULBgrd_DCH_Avg

UL Data Rate for PS QoS class background mapped on DCH (kbps). This peg provides Average aggregation for the measurement.

Data Source

RNC

Source Field

VS.DataRate.PSULBgrd.DCH

Source Section

RncFunction

DataRate_PSULBgrd_DCH_Max

UL Data Rate for PS QoS class background mapped on DCH (kbps). This peg provides Maximum aggregation for the measurement.

Data Source

RNC

Source Field

VS.DataRate.PSULBgrd.DCH

Source Section

RncFunction

DataRate_PSULBgrd_DCH_SumMax

UL Data Rate for PS QoS class background mapped on DCH (kbps).This peg provides Sum across time and Maximum across elements aggregation for the measurement.

Data Source

RNC

Source Field

VS.DataRate.PSULBgrd.DCH

Source Section

RncFunction

DataRate_PSULBgrd_EDCH

UL Data Rate for PS QoS class background mapped on E-DCH (kbps)

Data Source

RNC

Source Field

VS.DataRate.PSULBgrd.EDCH

Source Section

RncFunction

DataRate_PSULBgrd_EDCH_Avg

UL Data Rate for PS QoS class background mapped on E-DCH (kbps). This peg provides Average aggregation for the measurement.

Data Source

RNC

Source Field

VS.DataRate.PSULBgrd.EDCH

Source Section

RncFunction

DataRate_PSULBgrd_EDCH_Max

UL Data Rate for PS QoS class background mapped on E-DCH (kbps). This peg provides Maximum aggregation for the measurement.

Data Source

RNC

Source Field

VS.DataRate.PSULBgrd.EDCH

Source Section

RncFunction

DataRate_PSULBgrd_EDCH_SumMax

UL Data Rate for PS QoS class background mapped on E-DCH (kbps). This peg provides Sum across time and Maximum across elements aggregation for the measurement.

Data Source

RNC

Source Field

VS.DataRate.PSULBgrd.EDCH

Source Section

RncFunction

DataRate_PSULBgrd_Max

Renamed 4.3.7.0.10 - new name:DataRate_PSULBgrd_DCH_Max. UL Data Rate for PS QoS class background. This peg provides Maximum aggregation for the measurement.

Data Source

RNC

Source Field

VS.DataRate.PSULBgrd

Source Section

Uplink Data Rates / User Bits

DataRate_PSULBgrd_SumMax

Renamed 4.3.7.0.10 - new name:DataRate_PSULBgrd_DCH_SumMax. UL Data Rate for PS QoS class background. This peg provides Sum across time and Maximum across elements aggregation for the measurement.

Data Source

RNC

Source Field

VS.DataRate.PSULBgrd

Source Section

Uplink Data Rates / User Bits

DataRate_PSULIntact

Renamed 4.3.7.0.10 - new name:DataRate_PSULIntact_DCH. UL Data Rate for PS QoS class interactive

Data Source

RNC

Source Field

VS.DataRate.PSULIntact

Source Section

Uplink Data Rates / User Bits

DataRate_PSULIntact_Avg

Renamed 4.3.7.0.10 - new name:DataRate_PSULIntact_DCH_Avg. UL Data Rate for PS QoS class interactive. This peg provides Average aggregation for the measurement.

Data Source

RNC

Source Field

VS.DataRate.PSULIntact

Source Section

Uplink Data Rates / User Bits

DataRate_PSULIntact_DCH

UL Data Rate for PS QoS class interactive mapped on DCH (kbps)

Data Source

RNC

Source Field

VS.DataRate.PSULIntact.DCH

Source Section

RncFunction

DataRate_PSULIntact_DCH_Avg

UL Data Rate for PS QoS class interactive mapped on DCH (kbps). This peg provides Average aggregation for the measurement.

Data Source

RNC

Source Field

VS.DataRate.PSULIntact.DCH

Source Section

RncFunction

DataRate_PSULIntact_DCH_Max

UL Data Rate for PS QoS class interactive mapped on DCH (kbps). This peg provides Maximum aggregation for the measurement.

Data Source

RNC

Source Field

VS.DataRate.PSULIntact.DCH

Source Section

RncFunction

DataRate_PSULIntact_DCH_SumMax

UL Data Rate for PS QoS class interactive mapped on DCH (kbps). This peg provides Sum across time and Maximum across elements aggregation for the measurement.

Data Source

RNC

Source Field

VS.DataRate.PSULIntact.DCH

Source Section

RncFunction

DataRate_PSULIntact_EDCH

UL Data Rate for PS QoS class interactive mapped on E-DCH (kbps)

Data Source

RNC

Source Field

VS.DataRate.PSULIntact.EDCH

Source Section

RncFunction

DataRate_PSULIntact_EDCH_Avg

UL Data Rate for PS QoS class interactive mapped on E-DCH (kbps). This peg provides Average aggregation for the measurement.

Data Source

RNC

Source Field

VS.DataRate.PSULIntact.EDCH

Source Section

RncFunction

DataRate_PSULIntact_EDCH_Max

UL Data Rate for PS QoS class interactive mapped on E-DCH (kbps). This peg provides Maximum aggregation for the measurement.

Data Source

RNC

Source Field

VS.DataRate.PSULIntact.EDCH

Source Section

RncFunction

DataRate_PSULIntact_EDCH_SumMax

UL Data Rate for PS QoS class interactive mapped on E-DCH (kbps). This peg provides Sum across time and Maximum across elements aggregation for the measurement.

Data Source

RNC

Source Field

VS.DataRate.PSULIntact.EDCH

Source Section

RncFunction

DataRate_PSULIntact_Max

Renamed 4.3.7.0.10 - new name:DataRate_PSULIntact_DCH_Max. UL Data Rate for PS QoS class interactive. This peg provides Maximum aggregation for the measurement.

Data Source

RNC

Source Field

VS.DataRate.PSULIntact

Source Section

Uplink Data Rates / User Bits

DataRate_PSULIntact_SumMax

Renamed 4.3.7.0.10 - new name:DataRate_PSULIntact_DCH_SumMax. UL Data Rate for PS QoS class interactive. This peg provides Sum across time and Maximum across elements aggregation for the measurement.

Data Source

RNC

Source Field

VS.DataRate.PSULIntact

Source Section

Uplink Data Rates / User Bits

DataRate_PSULStrm

UL Data Rate for PS QoS class Streaming

Data Source

RNC

Source Field

VS.DataRate.PSULStrm

Source Section

Uplink Data Rates / User Bits

DataRate_PSULStrm_Avg

UL Data Rate for PS QoS class Streaming. This peg provides Average aggregation for the measurement.

Data Source

RNC

Source Field

VS.DataRate.PSULStrm

Source Section

Uplink Data Rates / User Bits

DataRate_PSULStrm_Max

UL Data Rate for PS QoS class Streaming. This peg provides Maximum aggregation for the measurement.

Data Source

RNC

Source Field

VS.DataRate.PSULStrm

Source Section

Uplink Data Rates / User Bits

DataRate_PSULStrm_SumMax

UL Data Rate for PS QoS class Streaming. This peg provides Sum across time and Maximum across elements aggregation for the measurement.

Data Source

RNC

Source Field

VS.DataRate.PSULStrm

Source Section

Uplink Data Rates / User Bits

DedicatedDownlinkDiscardSduRlcDlRabCsData64

Number of SDUs discarded without being sent on a dedicated RLC (from RLC counter DCH_DL_DIS_SDU) (DlRabCsData64)

Data Source

RNC C-Node

Source Field

VS.DedicatedDownlinkDiscardSduRlc.DlRabCsData64

Source Section

RncEquipment

DedicatedDownlinkDiscardSduRlcDlRabCsSpeech

Number of SDUs discarded without being sent on a dedicated RLC (from RLC counter DCH_DL_DIS_SDU) (DlRabCsSpeech)

Data Source

RNC C-Node

Source Field

VS.DedicatedDownlinkDiscardSduRlc.DlRabCsSpeech

Source Section

RncEquipment

DedicatedDownlinkDiscardSduRlcDlRabCsStr

Number of SDUs discarded without being sent on a dedicated RLC (from RLC counter DCH_DL_DIS_SDU) (DlRabCsStr)

Data Source

RNC C-Node

Source Field

VS.DedicatedDownlinkDiscardSduRlc.DlRabCsStr

Source Section

RncEquipment

DedicatedDownlinkDiscardSduRlcDlRabHsdpa

Number of SDUs discarded without being sent on a dedicated RLC (from RLC counter DCH_DL_DIS_SDU) (DlRabHsdpa)

Data Source

RNC C-Node

Source Field

VS.DedicatedDownlinkDiscardSduRlc.DlRabHsdpa

Source Section

RncEquipment

DedicatedDownlinkDiscardSduRlcDlRabOther

Number of SDUs discarded without being sent on a dedicated RLC (from RLC counter DCH_DL_DIS_SDU) (DlRabOther)

Data Source

RNC C-Node

Source Field

VS.DedicatedDownlinkDiscardSduRlc.DlRabOther

Source Section

RncEquipment

DedicatedDownlinkDiscardSduRlcDlRabPsIb128

Number of SDUs discarded without being sent on a dedicated RLC (from RLC counter DCH_DL_DIS_SDU) (DlRabPsIb128)

Data Source

RNC C-Node

Source Field

VS.DedicatedDownlinkDiscardSduRlc.DlRabPsIb128

Source Section

RncEquipment

DedicatedDownlinkDiscardSduRlcDlRabPsIb16

Number of SDUs discarded without being sent on a dedicated RLC (from RLC counter DCH_DL_DIS_SDU) (DlRabPsIb16)

Data Source

RNC C-Node

Source Field

VS.DedicatedDownlinkDiscardSduRlc.DlRabPsIb16

Source Section

RncEquipment

DedicatedDownlinkDiscardSduRlcDlRabPsIb256

Number of SDUs discarded without being sent on a dedicated RLC (from RLC counter DCH_DL_DIS_SDU) (DlRabPsIb256)

Data Source

RNC C-Node

Source Field

VS.DedicatedDownlinkDiscardSduRlc.DlRabPsIb256

Source Section

RncEquipment

DedicatedDownlinkDiscardSduRlcDlRabPsIb32

Number of SDUs discarded without being sent on a dedicated RLC (from RLC counter DCH_DL_DIS_SDU) (DlRabPsIb32)

Data Source

RNC C-Node

Source Field

VS.DedicatedDownlinkDiscardSduRlc.DlRabPsIb32

Source Section

RncEquipment

DedicatedDownlinkDiscardSduRlcDlRabPsIb384

Number of SDUs discarded without being sent on a dedicated RLC (from RLC counter DCH_DL_DIS_SDU) (DlRabPsIb384)

Data Source

RNC C-Node

Source Field

VS.DedicatedDownlinkDiscardSduRlc.DlRabPsIb384

Source Section

RncEquipment

DedicatedDownlinkDiscardSduRlcDlRabPsIb64

Number of SDUs discarded without being sent on a dedicated RLC (from RLC counter DCH_DL_DIS_SDU) (DlRabPsIb64)

Data Source

RNC C-Node

Source Field

VS.DedicatedDownlinkDiscardSduRlc.DlRabPsIb64

Source Section

RncEquipment

DedicatedDownlinkDiscardSduRlcDlRabPsIb8

Number of SDUs discarded without being sent on a dedicated RLC (from RLC counter DCH_DL_DIS_SDU) (DlRabPsIb8)

Data Source

RNC C-Node

Source Field

VS.DedicatedDownlinkDiscardSduRlc.DlRabPsIb8

Source Section

RncEquipment

DedicatedDownlinkDiscardSduRlcDlRabPsStr128

Number of SDUs discarded without being sent on a dedicated RLC (from RLC counter DCH_DL_DIS_SDU) (DlRabPsStr128)

Data Source

RNC C-Node

Source Field

VS.DedicatedDownlinkDiscardSduRlc.DlRabPsStr128

Source Section

RncEquipment

DedicatedDownlinkDiscardSduRlcDlRabPsStr256

Number of SDUs discarded without being sent on a dedicated RLC (from RLC counter DCH_DL_DIS_SDU) (DlRabPsStr256)

Data Source

RNC C-Node

Source Field

VS.DedicatedDownlinkDiscardSduRlc.DlRabPsStr256

Source Section

RncEquipment

DedicatedDownlinkDiscardSduRlcDlRabPsStr384

Number of SDUs discarded without being sent on a dedicated RLC (from RLC counter DCH_DL_DIS_SDU) (DlRabPsStr384)

Data Source

RNC C-Node

Source Field

VS.DedicatedDownlinkDiscardSduRlc.DlRabPsStr384

Source Section

RncEquipment

DedicatedDownlinkDiscardSduRlcDlRabPsStrOther

Number of SDUs discarded without being sent on a dedicated RLC (from RLC counter DCH_DL_DIS_SDU) (DlRabPsStrOther)

Data Source

RNC C-Node

Source Field

VS.DedicatedDownlinkDiscardSduRlc.DlRabPsStrOther

Source Section

RncEquipment

DedicatedDownlinkDiscardSduRlcDlRabSRB

Number of SDUs discarded without being sent on a dedicated RLC (from RLC counter DCH_DL_DIS_SDU) (DlRabSRB)

Data Source

RNC C-Node

Source Field

VS.DedicatedDownlinkDiscardSduRlc.DlRabSRB

Source Section

RncEquipment

DedicatedDownlinkKbytesRlcDlRabCsData64

Number of Kbytes of SDU payload sent on dedicated downlink RLCs (from RLC counter: DCH_DL_SDU_TRAFFIC) (DlRabCsData64)

Data Source

RNC C-Node

Source Field

VS.DedicatedDownlinkKbytesRlc.DlRabCsData64

Source Section

RncEquipment

DedicatedDownlinkKbytesRlcDlRabCsSpeech

Number of Kbytes of SDU payload sent on dedicated downlink RLCs (from RLC counter: DCH_DL_SDU_TRAFFIC) (DlRabCsSpeech)

Data Source

RNC C-Node

Source Field

VS.DedicatedDownlinkKbytesRlc.DlRabCsSpeech

Source Section

RncEquipment

DedicatedDownlinkKbytesRlcDlRabCsStr

Number of Kbytes of SDU payload sent on dedicated downlink RLCs (from RLC counter: DCH_DL_SDU_TRAFFIC) (DlRabCsStr)

Data Source

RNC C-Node

Source Field

VS.DedicatedDownlinkKbytesRlc.DlRabCsStr

Source Section

RncEquipment

DedicatedDownlinkKbytesRlcDlRabHsdpa

Number of Kbytes of SDU payload sent on dedicated downlink RLCs (from RLC counter: DCH_DL_SDU_TRAFFIC) (DlRabHsdpa)

Data Source

RNC C-Node

Source Field

VS.DedicatedDownlinkKbytesRlc.DlRabHsdpa

Source Section

RncEquipment

DedicatedDownlinkKbytesRlcDlRabOther

Number of Kbytes of SDU payload sent on dedicated downlink RLCs (from RLC counter: DCH_DL_SDU_TRAFFIC) (DlRabOther)

Data Source

RNC C-Node

Source Field

VS.DedicatedDownlinkKbytesRlc.DlRabOther

Source Section

RncEquipment

DedicatedDownlinkKbytesRlcDlRabPsIb128

Number of Kbytes of SDU payload sent on dedicated downlink RLCs (from RLC counter: DCH_DL_SDU_TRAFFIC) (DlRabPsIb128)

Data Source

RNC C-Node

Source Field

VS.DedicatedDownlinkKbytesRlc.DlRabPsIb128

Source Section

RncEquipment

DedicatedDownlinkKbytesRlcDlRabPsIb16

Number of Kbytes of SDU payload sent on dedicated downlink RLCs (from RLC counter: DCH_DL_SDU_TRAFFIC) (DlRabPsIb16)

Data Source

RNC C-Node

Source Field

VS.DedicatedDownlinkKbytesRlc.DlRabPsIb16

Source Section

RncEquipment

DedicatedDownlinkKbytesRlcDlRabPsIb256

Number of Kbytes of SDU payload sent on dedicated downlink RLCs (from RLC counter: DCH_DL_SDU_TRAFFIC) (DlRabPsIb256)

Data Source

RNC C-Node

Source Field

VS.DedicatedDownlinkKbytesRlc.DlRabPsIb256

Source Section

RncEquipment

DedicatedDownlinkKbytesRlcDlRabPsIb32

Number of Kbytes of SDU payload sent on dedicated downlink RLCs (from RLC counter: DCH_DL_SDU_TRAFFIC) (DlRabPsIb32)

Data Source

RNC C-Node

Source Field

VS.DedicatedDownlinkKbytesRlc.DlRabPsIb32

Source Section

RncEquipment

DedicatedDownlinkKbytesRlcDlRabPsIb384

Number of Kbytes of SDU payload sent on dedicated downlink RLCs (from RLC counter: DCH_DL_SDU_TRAFFIC) (DlRabPsIb384)

Data Source

RNC C-Node

Source Field

VS.DedicatedDownlinkKbytesRlc.DlRabPsIb384

Source Section

RncEquipment

DedicatedDownlinkKbytesRlcDlRabPsIb64

Number of Kbytes of SDU payload sent on dedicated downlink RLCs (from RLC counter: DCH_DL_SDU_TRAFFIC) (DlRabPsIb64)

Data Source

RNC C-Node

Source Field

VS.DedicatedDownlinkKbytesRlc.DlRabPsIb64

Source Section

RncEquipment

DedicatedDownlinkKbytesRlcDlRabPsIb8

Number of Kbytes of SDU payload sent on dedicated downlink RLCs (from RLC counter: DCH_DL_SDU_TRAFFIC) (DlRabPsIb8)

Data Source

RNC C-Node

Source Field

VS.DedicatedDownlinkKbytesRlc.DlRabPsIb8

Source Section

RncEquipment

DedicatedDownlinkKbytesRlcDlRabPsStr128

Number of Kbytes of SDU payload sent on dedicated downlink RLCs (from RLC counter: DCH_DL_SDU_TRAFFIC) (DlRabPsStr128)

Data Source

RNC C-Node

Source Field

VS.DedicatedDownlinkKbytesRlc.DlRabPsStr128

Source Section

RncEquipment

DedicatedDownlinkKbytesRlcDlRabPsStr256

Number of Kbytes of SDU payload sent on dedicated downlink RLCs (from RLC counter: DCH_DL_SDU_TRAFFIC) (DlRabPsStr256)

Data Source

RNC C-Node

Source Field

VS.DedicatedDownlinkKbytesRlc.DlRabPsStr256

Source Section

RncEquipment

DedicatedDownlinkKbytesRlcDlRabPsStr384

Number of Kbytes of SDU payload sent on dedicated downlink RLCs (from RLC counter: DCH_DL_SDU_TRAFFIC) (DlRabPsStr384)

Data Source

RNC C-Node

Source Field

VS.DedicatedDownlinkKbytesRlc.DlRabPsStr384

Source Section

RncEquipment

DedicatedDownlinkKbytesRlcDlRabPsStrOther

Number of Kbytes of SDU payload sent on dedicated downlink RLCs (from RLC counter: DCH_DL_SDU_TRAFFIC) (DlRabPsStrOther)

Data Source

RNC C-Node

Source Field

VS.DedicatedDownlinkKbytesRlc.DlRabPsStrOther

Source Section

RncEquipment

DedicatedDownlinkKbytesRlcDlRabSRB

Number of Kbytes of SDU payload sent on dedicated downlink RLCs (from RLC counter: DCH_DL_SDU_TRAFFIC) (DlRabSRB)

Data Source

RNC C-Node

Source Field

VS.DedicatedDownlinkKbytesRlc.DlRabSRB

Source Section

RncEquipment

DedicatedDownlinkPaddingSduRlcDlRabCsData64

Total KBytes of dummy padding added to downlink PDUs by RLC (from RLC counter DCH_DL_PAD_PDU) (DlRabCsData64)

Data Source

RNC C-Node

Source Field

VS.DedicatedDownlinkPaddingSduRlc.DlRabCsData64

Source Section

RncEquipment

DedicatedDownlinkPaddingSduRlcDlRabCsSpeech

Total KBytes of dummy padding added to downlink PDUs by RLC (from RLC counter DCH_DL_PAD_PDU) (DlRabCsSpeech)

Data Source

RNC C-Node

Source Field

VS.DedicatedDownlinkPaddingSduRlc.DlRabCsSpeech

Source Section

RncEquipment

DedicatedDownlinkPaddingSduRlcDlRabCsStr

Total KBytes of dummy padding added to downlink PDUs by RLC (from RLC counter DCH_DL_PAD_PDU) (DlRabCsStr)

Data Source

RNC C-Node

Source Field

VS.DedicatedDownlinkPaddingSduRlc.DlRabCsStr

Source Section

RncEquipment

DedicatedDownlinkPaddingSduRlcDlRabHsdpa

Total KBytes of dummy padding added to downlink PDUs by RLC (from RLC counter DCH_DL_PAD_PDU) (DlRabHsdpa)

Data Source

RNC C-Node

Source Field

VS.DedicatedDownlinkPaddingSduRlc.DlRabHsdpa

Source Section

RncEquipment

DedicatedDownlinkPaddingSduRlcDlRabOther

Total KBytes of dummy padding added to downlink PDUs by RLC (from RLC counter DCH_DL_PAD_PDU) (DlRabOther)

Data Source

RNC C-Node

Source Field

VS.DedicatedDownlinkPaddingSduRlc.DlRabOther

Source Section

RncEquipment

DedicatedDownlinkPaddingSduRlcDlRabPsIb128

Total KBytes of dummy padding added to downlink PDUs by RLC (from RLC counter DCH_DL_PAD_PDU) (DlRabPsIb128)

Data Source

RNC C-Node

Source Field

VS.DedicatedDownlinkPaddingSduRlc.DlRabPsIb128

Source Section

RncEquipment

DedicatedDownlinkPaddingSduRlcDlRabPsIb16

Total KBytes of dummy padding added to downlink PDUs by RLC (from RLC counter DCH_DL_PAD_PDU) (DlRabPsIb16)

Data Source

RNC C-Node

Source Field

VS.DedicatedDownlinkPaddingSduRlc.DlRabPsIb16

Source Section

RncEquipment

DedicatedDownlinkPaddingSduRlcDlRabPsIb256

Total KBytes of dummy padding added to downlink PDUs by RLC (from RLC counter DCH_DL_PAD_PDU) (DlRabPsIb256)

Data Source

RNC C-Node

Source Field

VS.DedicatedDownlinkPaddingSduRlc.DlRabPsIb256

Source Section

RncEquipment

DedicatedDownlinkPaddingSduRlcDlRabPsIb32

Total KBytes of dummy padding added to downlink PDUs by RLC (from RLC counter DCH_DL_PAD_PDU) (DlRabPsIb32)

Data Source

RNC C-Node

Source Field

VS.DedicatedDownlinkPaddingSduRlc.DlRabPsIb32

Source Section

RncEquipment

DedicatedDownlinkPaddingSduRlcDlRabPsIb384

Total KBytes of dummy padding added to downlink PDUs by RLC (from RLC counter DCH_DL_PAD_PDU) (DlRabPsIb384)

Data Source

RNC C-Node

Source Field

VS.DedicatedDownlinkPaddingSduRlc.DlRabPsIb384

Source Section

RncEquipment

DedicatedDownlinkPaddingSduRlcDlRabPsIb64

Total KBytes of dummy padding added to downlink PDUs by RLC (from RLC counter DCH_DL_PAD_PDU) (DlRabPsIb64)

Data Source

RNC C-Node

Source Field

VS.DedicatedDownlinkPaddingSduRlc.DlRabPsIb64

Source Section

RncEquipment

DedicatedDownlinkPaddingSduRlcDlRabPsIb8

Total KBytes of dummy padding added to downlink PDUs by RLC (from RLC counter DCH_DL_PAD_PDU) (DlRabPsIb8)

Data Source

RNC C-Node

Source Field

VS.DedicatedDownlinkPaddingSduRlc.DlRabPsIb8

Source Section

RncEquipment

DedicatedDownlinkPaddingSduRlcDlRabPsStr128

Total KBytes of dummy padding added to downlink PDUs by RLC (from RLC counter DCH_DL_PAD_PDU) (DlRabPsStr128)

Data Source

RNC C-Node

Source Field

VS.DedicatedDownlinkPaddingSduRlc.DlRabPsStr128

Source Section

RncEquipment

DedicatedDownlinkPaddingSduRlcDlRabPsStr256

Total KBytes of dummy padding added to downlink PDUs by RLC (from RLC counter DCH_DL_PAD_PDU) (DlRabPsStr256)

Data Source

RNC C-Node

Source Field

VS.DedicatedDownlinkPaddingSduRlc.DlRabPsStr256

Source Section

RncEquipment

DedicatedDownlinkPaddingSduRlcDlRabPsStr384

Total KBytes of dummy padding added to downlink PDUs by RLC (from RLC counter DCH_DL_PAD_PDU) (DlRabPsStr384)

Data Source

RNC C-Node

Source Field

VS.DedicatedDownlinkPaddingSduRlc.DlRabPsStr384

Source Section

RncEquipment

DedicatedDownlinkPaddingSduRlcDlRabPsStrOther

Total KBytes of dummy padding added to downlink PDUs by RLC (from RLC counter DCH_DL_PAD_PDU) (DlRabPsStrOther)

Data Source

RNC C-Node

Source Field

VS.DedicatedDownlinkPaddingSduRlc.DlRabPsStrOther

Source Section

RncEquipment

DedicatedDownlinkPaddingSduRlcDlRabSRB

Total KBytes of dummy padding added to downlink PDUs by RLC (from RLC counter DCH_DL_PAD_PDU) (DlRabSRB)

Data Source

RNC C-Node

Source Field

VS.DedicatedDownlinkPaddingSduRlc.DlRabSRB

Source Section

RncEquipment

DedicatedDownlinkPduRlcDlRabCsData64

Number of PDU sent on dedicated downlink RLCs (from RLC counter DCH_DL_PDU) (DlRabCsData64)

Data Source

RNC C-Node

Source Field

VS.DedicatedDownlinkPduRlc.DlRabCsData64

Source Section

RncEquipment

DedicatedDownlinkPduRlcDlRabCsSpeech

Number of PDU sent on dedicated downlink RLCs (from RLC counter DCH_DL_PDU) (DlRabCsSpeech)

Data Source

RNC C-Node

Source Field

VS.DedicatedDownlinkPduRlc.DlRabCsSpeech

Source Section

RncEquipment

DedicatedDownlinkPduRlcDlRabCsStr

Number of PDU sent on dedicated downlink RLCs (from RLC counter DCH_DL_PDU) (DlRabCsStr)

Data Source

RNC C-Node

Source Field

VS.DedicatedDownlinkPduRlc.DlRabCsStr

Source Section

RncEquipment

DedicatedDownlinkPduRlcDlRabHsdpa

Number of PDU sent on dedicated downlink RLCs (from RLC counter DCH_DL_PDU) (DlRabHsdpa)

Data Source

RNC C-Node

Source Field

VS.DedicatedDownlinkPduRlc.DlRabHsdpa

Source Section

RncEquipment

DedicatedDownlinkPduRlcDlRabOther

Number of PDU sent on dedicated downlink RLCs (from RLC counter DCH_DL_PDU) (DlRabOther)

Data Source

RNC C-Node

Source Field

VS.DedicatedDownlinkPduRlc.DlRabOther

Source Section

RncEquipment

DedicatedDownlinkPduRlcDlRabPsIb128

Number of PDU sent on dedicated downlink RLCs (from RLC counter DCH_DL_PDU) (DlRabPsIb128)

Data Source

RNC C-Node

Source Field

VS.DedicatedDownlinkPduRlc.DlRabPsIb128

Source Section

RncEquipment

DedicatedDownlinkPduRlcDlRabPsIb16

Number of PDU sent on dedicated downlink RLCs (from RLC counter DCH_DL_PDU) (DlRabPsIb16)

Data Source

RNC C-Node

Source Field

VS.DedicatedDownlinkPduRlc.DlRabPsIb16

Source Section

RncEquipment

DedicatedDownlinkPduRlcDlRabPsIb256

Number of PDU sent on dedicated downlink RLCs (from RLC counter DCH_DL_PDU) (DlRabPsIb256)

Data Source

RNC C-Node

Source Field

VS.DedicatedDownlinkPduRlc.DlRabPsIb256

Source Section

RncEquipment

DedicatedDownlinkPduRlcDlRabPsIb32

Number of PDU sent on dedicated downlink RLCs (from RLC counter DCH_DL_PDU) (DlRabPsIb32)

Data Source

RNC C-Node

Source Field

VS.DedicatedDownlinkPduRlc.DlRabPsIb32

Source Section

RncEquipment

DedicatedDownlinkPduRlcDlRabPsIb384

Number of PDU sent on dedicated downlink RLCs (from RLC counter DCH_DL_PDU) (DlRabPsIb384)

Data Source

RNC C-Node

Source Field

VS.DedicatedDownlinkPduRlc.DlRabPsIb384

Source Section

RncEquipment

DedicatedDownlinkPduRlcDlRabPsIb64

Number of PDU sent on dedicated downlink RLCs (from RLC counter DCH_DL_PDU) (DlRabPsIb64)

Data Source

RNC C-Node

Source Field

VS.DedicatedDownlinkPduRlc.DlRabPsIb64

Source Section

RncEquipment

DedicatedDownlinkPduRlcDlRabPsIb8

Number of PDU sent on dedicated downlink RLCs (from RLC counter DCH_DL_PDU) (DlRabPsIb8)

Data Source

RNC C-Node

Source Field

VS.DedicatedDownlinkPduRlc.DlRabPsIb8

Source Section

RncEquipment

DedicatedDownlinkPduRlcDlRabPsStr128

Number of PDU sent on dedicated downlink RLCs (from RLC counter DCH_DL_PDU) (DlRabPsStr128)

Data Source

RNC C-Node

Source Field

VS.DedicatedDownlinkPduRlc.DlRabPsStr128

Source Section

RncEquipment

DedicatedDownlinkPduRlcDlRabPsStr256

Number of PDU sent on dedicated downlink RLCs (from RLC counter DCH_DL_PDU) (DlRabPsStr256)

Data Source

RNC C-Node

Source Field

VS.DedicatedDownlinkPduRlc.DlRabPsStr256

Source Section

RncEquipment

DedicatedDownlinkPduRlcDlRabPsStr384

Number of PDU sent on dedicated downlink RLCs (from RLC counter DCH_DL_PDU) (DlRabPsStr384)

Data Source

RNC C-Node

Source Field

VS.DedicatedDownlinkPduRlc.DlRabPsStr384

Source Section

RncEquipment

DedicatedDownlinkPduRlcDlRabPsStrOther

Number of PDU sent on dedicated downlink RLCs (from RLC counter DCH_DL_PDU) (DlRabPsStrOther)

Data Source

RNC C-Node

Source Field

VS.DedicatedDownlinkPduRlc.DlRabPsStrOther

Source Section

RncEquipment

DedicatedDownlinkPduRlcDlRabSRB

Number of PDU sent on dedicated downlink RLCs (from RLC counter DCH_DL_PDU) (DlRabSRB)

Data Source

RNC C-Node

Source Field

VS.DedicatedDownlinkPduRlc.DlRabSRB

Source Section

RncEquipment

DedicatedDownlinkSduRlcDlRabCsData64

Number of SDUs sent on dedicated downlink RLCs (from RLC counter DCH_DL_SDU) (DlRabCsData64)

Data Source

RNC C-Node

Source Field

VS.DedicatedDownlinkSduRlc.DlRabCsData64

Source Section

RncEquipment

DedicatedDownlinkSduRlcDlRabCsSpeech

Number of SDUs sent on dedicated downlink RLCs (from RLC counter DCH_DL_SDU) (DlRabCsSpeech)

Data Source

RNC C-Node

Source Field

VS.DedicatedDownlinkSduRlc.DlRabCsSpeech

Source Section

RncEquipment

DedicatedDownlinkSduRlcDlRabCsStr

Number of SDUs sent on dedicated downlink RLCs (from RLC counter DCH_DL_SDU) (DlRabCsStr)

Data Source

RNC C-Node

Source Field

VS.DedicatedDownlinkSduRlc.DlRabCsStr

Source Section

RncEquipment

DedicatedDownlinkSduRlcDlRabHsdpa

Number of SDUs sent on dedicated downlink RLCs (from RLC counter DCH_DL_SDU) (DlRabHsdpa)

Data Source

RNC C-Node

Source Field

VS.DedicatedDownlinkSduRlc.DlRabHsdpa

Source Section

RncEquipment

DedicatedDownlinkSduRlcDlRabOther

Number of SDUs sent on dedicated downlink RLCs (from RLC counter DCH_DL_SDU) (DlRabOther)

Data Source

RNC C-Node

Source Field

VS.DedicatedDownlinkSduRlc.DlRabOther

Source Section

RncEquipment

DedicatedDownlinkSduRlcDlRabPsIb128

Number of SDUs sent on dedicated downlink RLCs (from RLC counter DCH_DL_SDU) (DlRabPsIb128)

Data Source

RNC C-Node

Source Field

VS.DedicatedDownlinkSduRlc.DlRabPsIb128

Source Section

RncEquipment

DedicatedDownlinkSduRlcDlRabPsIb16

Number of SDUs sent on dedicated downlink RLCs (from RLC counter DCH_DL_SDU) (DlRabPsIb16)

Data Source

RNC C-Node

Source Field

VS.DedicatedDownlinkSduRlc.DlRabPsIb16

Source Section

RncEquipment

DedicatedDownlinkSduRlcDlRabPsIb256

Number of SDUs sent on dedicated downlink RLCs (from RLC counter DCH_DL_SDU) (DlRabPsIb256)

Data Source

RNC C-Node

Source Field

VS.DedicatedDownlinkSduRlc.DlRabPsIb256

Source Section

RncEquipment

DedicatedDownlinkSduRlcDlRabPsIb32

Number of SDUs sent on dedicated downlink RLCs (from RLC counter DCH_DL_SDU) (DlRabPsIb32)

Data Source

RNC C-Node

Source Field

VS.DedicatedDownlinkSduRlc.DlRabPsIb32

Source Section

RncEquipment

DedicatedDownlinkSduRlcDlRabPsIb384

Number of SDUs sent on dedicated downlink RLCs (from RLC counter DCH_DL_SDU) (DlRabPsIb384)

Data Source

RNC C-Node

Source Field

VS.DedicatedDownlinkSduRlc.DlRabPsIb384

Source Section

RncEquipment

DedicatedDownlinkSduRlcDlRabPsIb64

Number of SDUs sent on dedicated downlink RLCs (from RLC counter DCH_DL_SDU) (DlRabPsIb64)

Data Source

RNC C-Node

Source Field

VS.DedicatedDownlinkSduRlc.DlRabPsIb64

Source Section

RncEquipment

DedicatedDownlinkSduRlcDlRabPsIb8

Number of SDUs sent on dedicated downlink RLCs (from RLC counter DCH_DL_SDU) (DlRabPsIb8)

Data Source

RNC C-Node

Source Field

VS.DedicatedDownlinkSduRlc.DlRabPsIb8

Source Section

RncEquipment

DedicatedDownlinkSduRlcDlRabPsStr128

Number of SDUs sent on dedicated downlink RLCs (from RLC counter DCH_DL_SDU) (DlRabPsStr128)

Data Source

RNC C-Node

Source Field

VS.DedicatedDownlinkSduRlc.DlRabPsStr128

Source Section

RncEquipment

DedicatedDownlinkSduRlcDlRabPsStr256

Number of SDUs sent on dedicated downlink RLCs (from RLC counter DCH_DL_SDU) (DlRabPsStr256)

Data Source

RNC C-Node

Source Field

VS.DedicatedDownlinkSduRlc.DlRabPsStr256

Source Section

RncEquipment

DedicatedDownlinkSduRlcDlRabPsStr384

Number of SDUs sent on dedicated downlink RLCs (from RLC counter DCH_DL_SDU) (DlRabPsStr384)

Data Source

RNC C-Node

Source Field

VS.DedicatedDownlinkSduRlc.DlRabPsStr384

Source Section

RncEquipment

DedicatedDownlinkSduRlcDlRabPsStrOther

Number of SDUs sent on dedicated downlink RLCs (from RLC counter DCH_DL_SDU) (DlRabPsStrOther)

Data Source

RNC C-Node

Source Field

VS.DedicatedDownlinkSduRlc.DlRabPsStrOther

Source Section

RncEquipment

DedicatedDownlinkSduRlcDlRabSRB

Number of SDUs sent on dedicated downlink RLCs (from RLC counter DCH_DL_SDU) (DlRabSRB)

Data Source

RNC C-Node

Source Field

VS.DedicatedDownlinkSduRlc.DlRabSRB

Source Section

RncEquipment

DedicatedUplinkBadPdusUlRabCsData64

Number of TB/PDUs received with CRCi=1 (UlRabCsData64)

Data Source

RNC C-Node

Source Field

VS.DedicatedUplinkBadPdus.UlRabCsData64

Source Section

RncEquipment

DedicatedUplinkBadPdusUlRabCsSpeech

Number of TB/PDUs received with CRCi=1 (UlRabCsSpeech)

Data Source

RNC C-Node

Source Field

VS.DedicatedUplinkBadPdus.UlRabCsSpeech

Source Section

RncEquipment

DedicatedUplinkBadPdusUlRabCsStr

Number of TB/PDUs received with CRCi=1 (UlRabCsStr)

Data Source

RNC C-Node

Source Field

VS.DedicatedUplinkBadPdus.UlRabCsStr

Source Section

RncEquipment

DedicatedUplinkBadPdusUlRabHsupa

Number of TB/PDUs received with CRCi=1 (UlRabHsupa)

Data Source

RNC C-Node

Source Field

VS.DedicatedUplinkBadPdus.UlRabHsupa

Source Section

RncEquipment

DedicatedUplinkBadPdusUlRabOther

Number of TB/PDUs received with CRCi=1 (UlRabOther)

Data Source

RNC C-Node

Source Field

VS.DedicatedUplinkBadPdus.UlRabOther

Source Section

RncEquipment

DedicatedUplinkBadPdusUlRabPsIb128

Number of TB/PDUs received with CRCi=1 (UlRabPsIb128)

Data Source

RNC C-Node

Source Field

VS.DedicatedUplinkBadPdus.UlRabPsIb128

Source Section

RncEquipment

DedicatedUplinkBadPdusUlRabPsIb16

Number of TB/PDUs received with CRCi=1 (UlRabPsIb16)

Data Source

RNC C-Node

Source Field

VS.DedicatedUplinkBadPdus.UlRabPsIb16

Source Section

RncEquipment

DedicatedUplinkBadPdusUlRabPsIb32

Number of TB/PDUs received with CRCi=1 (UlRabPsIb32)

Data Source

RNC C-Node

Source Field

VS.DedicatedUplinkBadPdus.UlRabPsIb32

Source Section

RncEquipment

DedicatedUplinkBadPdusUlRabPsIb384

Number of TB/PDUs received with CRCi=1 (UlRabPsIb384)

Data Source

RNC C-Node

Source Field

VS.DedicatedUplinkBadPdus.UlRabPsIb384

Source Section

RncEquipment

DedicatedUplinkBadPdusUlRabPsIb64

Number of TB/PDUs received with CRCi=1 (UlRabPsIb64)

Data Source

RNC C-Node

Source Field

VS.DedicatedUplinkBadPdus.UlRabPsIb64

Source Section

RncEquipment

DedicatedUplinkBadPdusUlRabPsIb8

Number of TB/PDUs received with CRCi=1 (UlRabPsIb8)

Data Source

RNC C-Node

Source Field

VS.DedicatedUplinkBadPdus.UlRabPsIb8

Source Section

RncEquipment

DedicatedUplinkBadPdusUlRabPsStr16

Number of TB/PDUs received with CRCi=1 (UlRabPsStr16)

Data Source

RNC C-Node

Source Field

VS.DedicatedUplinkBadPdus.UlRabPsStr16

Source Section

RncEquipment

DedicatedUplinkBadPdusUlRabPsStr64

Number of TB/PDUs received with CRCi=1 (UlRabPsStr64)

Data Source

RNC C-Node

Source Field

VS.DedicatedUplinkBadPdus.UlRabPsStr64

Source Section

RncEquipment

DedicatedUplinkBadPdusUlRabPsStrOther

Number of TB/PDUs received with CRCi=1 (UlRabPsStrOther)

Data Source

RNC C-Node

Source Field

VS.DedicatedUplinkBadPdus.UlRabPsStrOther

Source Section

RncEquipment

DedicatedUplinkBadPdusUlRabSRB

Number of TB/PDUs received with CRCi=1 (UlRabSRB)

Data Source

RNC C-Node

Source Field

VS.DedicatedUplinkBadPdus.UlRabSRB

Source Section

RncEquipment

DedicatedUplinkKbytesRlcUlRabCsData64

Number of Kbytes of SDU payload received on dedicated uplink RLCs (from RLC counter: DCH_UL_SDU_TRAFFIC) (UlRabCsData64)

Data Source

RNC C-Node

Source Field

VS.DedicatedUplinkKbytesRlc.UlRabCsData64

Source Section

RncEquipment

DedicatedUplinkKbytesRlcUlRabCsSpeech

Number of Kbytes of SDU payload received on dedicated uplink RLCs (from RLC counter: DCH_UL_SDU_TRAFFIC) (UlRabCsSpeech)

Data Source

RNC C-Node

Source Field

VS.DedicatedUplinkKbytesRlc.UlRabCsSpeech

Source Section

RncEquipment

DedicatedUplinkKbytesRlcUlRabCsStr

Number of Kbytes of SDU payload received on dedicated uplink RLCs (from RLC counter: DCH_UL_SDU_TRAFFIC) (UlRabCsStr)

Data Source

RNC C-Node

Source Field

VS.DedicatedUplinkKbytesRlc.UlRabCsStr

Source Section

RncEquipment

DedicatedUplinkKbytesRlcUlRabHsupa

Number of Kbytes of SDU payload received on dedicated uplink RLCs (from RLC counter: DCH_UL_SDU_TRAFFIC) (UlRabHsupa)

Data Source

RNC C-Node

Source Field

VS.DedicatedUplinkKbytesRlc.UlRabHsupa

Source Section

RncEquipment

DedicatedUplinkKbytesRlcUlRabOther

Number of Kbytes of SDU payload received on dedicated uplink RLCs (from RLC counter: DCH_UL_SDU_TRAFFIC) (UlRabOther)

Data Source

RNC C-Node

Source Field

VS.DedicatedUplinkKbytesRlc.UlRabOther

Source Section

RncEquipment

DedicatedUplinkKbytesRlcUlRabPsIb128

Number of Kbytes of SDU payload received on dedicated uplink RLCs (from RLC counter: DCH_UL_SDU_TRAFFIC) (UlRabPsIb128)

Data Source

RNC C-Node

Source Field

VS.DedicatedUplinkKbytesRlc.UlRabPsIb128

Source Section

RncEquipment

DedicatedUplinkKbytesRlcUlRabPsIb16

Number of Kbytes of SDU payload received on dedicated uplink RLCs (from RLC counter: DCH_UL_SDU_TRAFFIC) (UlRabPsIb16)

Data Source

RNC C-Node

Source Field

VS.DedicatedUplinkKbytesRlc.UlRabPsIb16

Source Section

RncEquipment

DedicatedUplinkKbytesRlcUlRabPsIb32

Number of Kbytes of SDU payload received on dedicated uplink RLCs (from RLC counter: DCH_UL_SDU_TRAFFIC) (UlRabPsIb32)

Data Source

RNC C-Node

Source Field

VS.DedicatedUplinkKbytesRlc.UlRabPsIb32

Source Section

RncEquipment

DedicatedUplinkKbytesRlcUlRabPsIb384

Number of Kbytes of SDU payload received on dedicated uplink RLCs (from RLC counter: DCH_UL_SDU_TRAFFIC) (UlRabPsIb384)

Data Source

RNC C-Node

Source Field

VS.DedicatedUplinkKbytesRlc.UlRabPsIb384

Source Section

RncEquipment

DedicatedUplinkKbytesRlcUlRabPsIb64

Number of Kbytes of SDU payload received on dedicated uplink RLCs (from RLC counter: DCH_UL_SDU_TRAFFIC) (UlRabPsIb64)

Data Source

RNC C-Node

Source Field

VS.DedicatedUplinkKbytesRlc.UlRabPsIb64

Source Section

RncEquipment

DedicatedUplinkKbytesRlcUlRabPsIb8

Number of Kbytes of SDU payload received on dedicated uplink RLCs (from RLC counter: DCH_UL_SDU_TRAFFIC) (UlRabPsIb8)

Data Source

RNC C-Node

Source Field

VS.DedicatedUplinkKbytesRlc.UlRabPsIb8

Source Section

RncEquipment

DedicatedUplinkKbytesRlcUlRabPsStr16

Number of Kbytes of SDU payload received on dedicated uplink RLCs (from RLC counter: DCH_UL_SDU_TRAFFIC) (UlRabPsStr16)

Data Source

RNC C-Node

Source Field

VS.DedicatedUplinkKbytesRlc.UlRabPsStr16

Source Section

RncEquipment

DedicatedUplinkKbytesRlcUlRabPsStr64

Number of Kbytes of SDU payload received on dedicated uplink RLCs (from RLC counter: DCH_UL_SDU_TRAFFIC) (UlRabPsStr64)

Data Source

RNC C-Node

Source Field

VS.DedicatedUplinkKbytesRlc.UlRabPsStr64

Source Section

RncEquipment

DedicatedUplinkKbytesRlcUlRabPsStrOther

Number of Kbytes of SDU payload received on dedicated uplink RLCs (from RLC counter: DCH_UL_SDU_TRAFFIC) (UlRabPsStrOther)

Data Source

RNC C-Node

Source Field

VS.DedicatedUplinkKbytesRlc.UlRabPsStrOther

Source Section

RncEquipment

DedicatedUplinkKbytesRlcUlRabSRB

Number of Kbytes of SDU payload received on dedicated uplink RLCs (from RLC counter: DCH_UL_SDU_TRAFFIC) (UlRabSRB)

Data Source

RNC C-Node

Source Field

VS.DedicatedUplinkKbytesRlc.UlRabSRB

Source Section

RncEquipment

DedicatedUplinkMissingPduRlcUlRabCsData64

Number of PDUs missing on dedicated RLC in the uplink (from RLC counter DCH_UL_MIS_PDU). This counter is not applicable to CS Radio Bearers (only applicable to AM RBs). (UlRabCsData64)

Data Source

RNC C-Node

Source Field

VS.DedicatedUplinkMissingPduRlc.UlRabCsData64

Source Section

RncEquipment

DedicatedUplinkMissingPduRlcUlRabCsSpeech

Number of PDUs missing on dedicated RLC in the uplink (from RLC counter DCH_UL_MIS_PDU). This counter is not applicable to CS Radio Bearers (only applicable to AM RBs). (UlRabCsSpeech)

Data Source

RNC C-Node

Source Field

VS.DedicatedUplinkMissingPduRlc.UlRabCsSpeech

Source Section

RncEquipment

DedicatedUplinkMissingPduRlcUlRabCsStr

Number of PDUs missing on dedicated RLC in the uplink (from RLC counter DCH_UL_MIS_PDU). This counter is not applicable to CS Radio Bearers (only applicable to AM RBs). (UlRabCsStr)

Data Source

RNC C-Node

Source Field

VS.DedicatedUplinkMissingPduRlc.UlRabCsStr

Source Section

RncEquipment

DedicatedUplinkMissingPduRlcUlRabHsupa

Number of PDUs missing on dedicated RLC in the uplink (from RLC counter DCH_UL_MIS_PDU). This counter is not applicable to CS Radio Bearers (only applicable to AM RBs). (UlRabHsupa)

Data Source

RNC C-Node

Source Field

VS.DedicatedUplinkMissingPduRlc.UlRabHsupa

Source Section

RncEquipment

DedicatedUplinkMissingPduRlcUlRabOther

Number of PDUs missing on dedicated RLC in the uplink (from RLC counter DCH_UL_MIS_PDU). This counter is not applicable to CS Radio Bearers (only applicable to AM RBs). (UlRabOther)

Data Source

RNC C-Node

Source Field

VS.DedicatedUplinkMissingPduRlc.UlRabOther

Source Section

RncEquipment

DedicatedUplinkMissingPduRlcUlRabPsIb128

Number of PDUs missing on dedicated RLC in the uplink (from RLC counter DCH_UL_MIS_PDU). This counter is not applicable to CS Radio Bearers (only applicable to AM RBs). (UlRabPsIb128)

Data Source

RNC C-Node

Source Field

VS.DedicatedUplinkMissingPduRlc.UlRabPsIb128

Source Section

RncEquipment

DedicatedUplinkMissingPduRlcUlRabPsIb16

Number of PDUs missing on dedicated RLC in the uplink (from RLC counter DCH_UL_MIS_PDU). This counter is not applicable to CS Radio Bearers (only applicable to AM RBs). (UlRabPsIb16)

Data Source

RNC C-Node

Source Field

VS.DedicatedUplinkMissingPduRlc.UlRabPsIb16

Source Section

RncEquipment

DedicatedUplinkMissingPduRlcUlRabPsIb32

Number of PDUs missing on dedicated RLC in the uplink (from RLC counter DCH_UL_MIS_PDU). This counter is not applicable to CS Radio Bearers (only applicable to AM RBs). (UlRabPsIb32)

Data Source

RNC C-Node

Source Field

VS.DedicatedUplinkMissingPduRlc.UlRabPsIb32

Source Section

RncEquipment

DedicatedUplinkMissingPduRlcUlRabPsIb384

Number of PDUs missing on dedicated RLC in the uplink (from RLC counter DCH_UL_MIS_PDU). This counter is not applicable to CS Radio Bearers (only applicable to AM RBs). (UlRabPsIb384)

Data Source

RNC C-Node

Source Field

VS.DedicatedUplinkMissingPduRlc.UlRabPsIb384

Source Section

RncEquipment

DedicatedUplinkMissingPduRlcUlRabPsIb64

Number of PDUs missing on dedicated RLC in the uplink (from RLC counter DCH_UL_MIS_PDU). This counter is not applicable to CS Radio Bearers (only applicable to AM RBs). (UlRabPsIb64)

Data Source

RNC C-Node

Source Field

VS.DedicatedUplinkMissingPduRlc.UlRabPsIb64

Source Section

RncEquipment

DedicatedUplinkMissingPduRlcUlRabPsIb8

Number of PDUs missing on dedicated RLC in the uplink (from RLC counter DCH_UL_MIS_PDU). This counter is not applicable to CS Radio Bearers (only applicable to AM RBs). (UlRabPsIb8)

Data Source

RNC C-Node

Source Field

VS.DedicatedUplinkMissingPduRlc.UlRabPsIb8

Source Section

RncEquipment

DedicatedUplinkMissingPduRlcUlRabPsStr16

Number of PDUs missing on dedicated RLC in the uplink (from RLC counter DCH_UL_MIS_PDU). This counter is not applicable to CS Radio Bearers (only applicable to AM RBs). (UlRabPsStr16)

Data Source

RNC C-Node

Source Field

VS.DedicatedUplinkMissingPduRlc.UlRabPsStr16

Source Section

RncEquipment

DedicatedUplinkMissingPduRlcUlRabPsStr64

Number of PDUs missing on dedicated RLC in the uplink (from RLC counter DCH_UL_MIS_PDU). This counter is not applicable to CS Radio Bearers (only applicable to AM RBs). (UlRabPsStr64)

Data Source

RNC C-Node

Source Field

VS.DedicatedUplinkMissingPduRlc.UlRabPsStr64

Source Section

RncEquipment

DedicatedUplinkMissingPduRlcUlRabPsStrOther

Number of PDUs missing on dedicated RLC in the uplink (from RLC counter DCH_UL_MIS_PDU). This counter is not applicable to CS Radio Bearers (only applicable to AM RBs). (UlRabPsStrOther)

Data Source

RNC C-Node

Source Field

VS.DedicatedUplinkMissingPduRlc.UlRabPsStrOther

Source Section

RncEquipment

DedicatedUplinkMissingPduRlcUlRabSRB

Number of PDUs missing on dedicated RLC in the uplink (from RLC counter DCH_UL_MIS_PDU). This counter is not applicable to CS Radio Bearers (only applicable to AM RBs). (UlRabSRB)

Data Source

RNC C-Node

Source Field

VS.DedicatedUplinkMissingPduRlc.UlRabSRB

Source Section

RncEquipment

DedicatedUplinkPduRlcUlRabCsData64

Number of PDU received on dedicated uplink RLCs (from RLC counter DCH_UL_PDU) (UlRabCsData64)

Data Source

RNC C-Node

Source Field

VS.DedicatedUplinkPduRlc.UlRabCsData64

Source Section

RncEquipment

DedicatedUplinkPduRlcUlRabCsSpeech

Number of PDU received on dedicated uplink RLCs (from RLC counter DCH_UL_PDU) (UlRabCsSpeech)

Data Source

RNC C-Node

Source Field

VS.DedicatedUplinkPduRlc.UlRabCsSpeech

Source Section

RncEquipment

DedicatedUplinkPduRlcUlRabCsStr

Number of PDU received on dedicated uplink RLCs (from RLC counter DCH_UL_PDU) (UlRabCsStr)

Data Source

RNC C-Node

Source Field

VS.DedicatedUplinkPduRlc.UlRabCsStr

Source Section

RncEquipment

DedicatedUplinkPduRlcUlRabHsupa

Number of PDU received on dedicated uplink RLCs (from RLC counter DCH_UL_PDU) (UlRabHsupa)

Data Source

RNC C-Node

Source Field

VS.DedicatedUplinkPduRlc.UlRabHsupa

Source Section

RncEquipment

DedicatedUplinkPduRlcUlRabOther

Number of PDU received on dedicated uplink RLCs (from RLC counter DCH_UL_PDU) (UlRabOther)

Data Source

RNC C-Node

Source Field

VS.DedicatedUplinkPduRlc.UlRabOther

Source Section

RncEquipment

DedicatedUplinkPduRlcUlRabPsIb128

Number of PDU received on dedicated uplink RLCs (from RLC counter DCH_UL_PDU) (UlRabPsIb128)

Data Source

RNC C-Node

Source Field

VS.DedicatedUplinkPduRlc.UlRabPsIb128

Source Section

RncEquipment

DedicatedUplinkPduRlcUlRabPsIb16

Number of PDU received on dedicated uplink RLCs (from RLC counter DCH_UL_PDU) (UlRabPsIb16)

Data Source

RNC C-Node

Source Field

VS.DedicatedUplinkPduRlc.UlRabPsIb16

Source Section

RncEquipment

DedicatedUplinkPduRlcUlRabPsIb32

Number of PDU received on dedicated uplink RLCs (from RLC counter DCH_UL_PDU) (UlRabPsIb32)

Data Source

RNC C-Node

Source Field

VS.DedicatedUplinkPduRlc.UlRabPsIb32

Source Section

RncEquipment

DedicatedUplinkPduRlcUlRabPsIb384

Number of PDU received on dedicated uplink RLCs (from RLC counter DCH_UL_PDU) (UlRabPsIb384)

Data Source

RNC C-Node

Source Field

VS.DedicatedUplinkPduRlc.UlRabPsIb384

Source Section

RncEquipment

DedicatedUplinkPduRlcUlRabPsIb64

Number of PDU received on dedicated uplink RLCs (from RLC counter DCH_UL_PDU) (UlRabPsIb64)

Data Source

RNC C-Node

Source Field

VS.DedicatedUplinkPduRlc.UlRabPsIb64

Source Section

RncEquipment

DedicatedUplinkPduRlcUlRabPsIb8

Number of PDU received on dedicated uplink RLCs (from RLC counter DCH_UL_PDU) (UlRabPsIb8)

Data Source

RNC C-Node

Source Field

VS.DedicatedUplinkPduRlc.UlRabPsIb8

Source Section

RncEquipment

DedicatedUplinkPduRlcUlRabPsStr16

Number of PDU received on dedicated uplink RLCs (from RLC counter DCH_UL_PDU) (UlRabPsStr16)

Data Source

RNC C-Node

Source Field

VS.DedicatedUplinkPduRlc.UlRabPsStr16

Source Section

RncEquipment

DedicatedUplinkPduRlcUlRabPsStr64

Number of PDU received on dedicated uplink RLCs (from RLC counter DCH_UL_PDU) (UlRabPsStr64)

Data Source

RNC C-Node

Source Field

VS.DedicatedUplinkPduRlc.UlRabPsStr64

Source Section

RncEquipment

DedicatedUplinkPduRlcUlRabPsStrOther

Number of PDU received on dedicated uplink RLCs (from RLC counter DCH_UL_PDU) (UlRabPsStrOther)

Data Source

RNC C-Node

Source Field

VS.DedicatedUplinkPduRlc.UlRabPsStrOther

Source Section

RncEquipment

DedicatedUplinkPduRlcUlRabSRB

Number of PDU received on dedicated uplink RLCs (from RLC counter DCH_UL_PDU) (UlRabSRB)

Data Source

RNC C-Node

Source Field

VS.DedicatedUplinkPduRlc.UlRabSRB

Source Section

RncEquipment

DedicatedUplinkSduRlcUlRabCsData64

Number of SDUs received on dedicated uplink RLCs (from RLC counter DCH_UL_SDU) (UlRabCsData64)

Data Source

RNC C-Node

Source Field

VS.DedicatedUplinkSduRlc.UlRabCsData64

Source Section

RncEquipment

DedicatedUplinkSduRlcUlRabCsSpeech

Number of SDUs received on dedicated uplink RLCs (from RLC counter DCH_UL_SDU) (UlRabCsSpeech)

Data Source

RNC C-Node

Source Field

VS.DedicatedUplinkSduRlc.UlRabCsSpeech

Source Section

RncEquipment

DedicatedUplinkSduRlcUlRabCsStr

Number of SDUs received on dedicated uplink RLCs (from RLC counter DCH_UL_SDU) (UlRabCsStr)

Data Source

RNC C-Node

Source Field

VS.DedicatedUplinkSduRlc.UlRabCsStr

Source Section

RncEquipment

DedicatedUplinkSduRlcUlRabHsupa

Number of SDUs received on dedicated uplink RLCs (from RLC counter DCH_UL_SDU) (UlRabHsupa)

Data Source

RNC C-Node

Source Field

VS.DedicatedUplinkSduRlc.UlRabHsupa

Source Section

RncEquipment

DedicatedUplinkSduRlcUlRabOther

Number of SDUs received on dedicated uplink RLCs (from RLC counter DCH_UL_SDU) (UlRabOther)

Data Source

RNC C-Node

Source Field

VS.DedicatedUplinkSduRlc.UlRabOther

Source Section

RncEquipment

DedicatedUplinkSduRlcUlRabPsIb128

Number of SDUs received on dedicated uplink RLCs (from RLC counter DCH_UL_SDU) (UlRabPsIb128)

Data Source

RNC C-Node

Source Field

VS.DedicatedUplinkSduRlc.UlRabPsIb128

Source Section

RncEquipment

DedicatedUplinkSduRlcUlRabPsIb16

Number of SDUs received on dedicated uplink RLCs (from RLC counter DCH_UL_SDU) (UlRabPsIb16)

Data Source

RNC C-Node

Source Field

VS.DedicatedUplinkSduRlc.UlRabPsIb16

Source Section

RncEquipment

DedicatedUplinkSduRlcUlRabPsIb32

Number of SDUs received on dedicated uplink RLCs (from RLC counter DCH_UL_SDU) (UlRabPsIb32)

Data Source

RNC C-Node

Source Field

VS.DedicatedUplinkSduRlc.UlRabPsIb32

Source Section

RncEquipment

DedicatedUplinkSduRlcUlRabPsIb384

Number of SDUs received on dedicated uplink RLCs (from RLC counter DCH_UL_SDU) (UlRabPsIb384)

Data Source

RNC C-Node

Source Field

VS.DedicatedUplinkSduRlc.UlRabPsIb384

Source Section

RncEquipment

DedicatedUplinkSduRlcUlRabPsIb64

Number of SDUs received on dedicated uplink RLCs (from RLC counter DCH_UL_SDU) (UlRabPsIb64)

Data Source

RNC C-Node

Source Field

VS.DedicatedUplinkSduRlc.UlRabPsIb64

Source Section

RncEquipment

DedicatedUplinkSduRlcUlRabPsIb8

Number of SDUs received on dedicated uplink RLCs (from RLC counter DCH_UL_SDU) (UlRabPsIb8)

Data Source

RNC C-Node

Source Field

VS.DedicatedUplinkSduRlc.UlRabPsIb8

Source Section

RncEquipment

DedicatedUplinkSduRlcUlRabPsStr16

Number of SDUs received on dedicated uplink RLCs (from RLC counter DCH_UL_SDU) (UlRabPsStr16)

Data Source

RNC C-Node

Source Field

VS.DedicatedUplinkSduRlc.UlRabPsStr16

Source Section

RncEquipment

DedicatedUplinkSduRlcUlRabPsStr64

Number of SDUs received on dedicated uplink RLCs (from RLC counter DCH_UL_SDU) (UlRabPsStr64)

Data Source

RNC C-Node

Source Field

VS.DedicatedUplinkSduRlc.UlRabPsStr64

Source Section

RncEquipment

DedicatedUplinkSduRlcUlRabPsStrOther

Number of SDUs received on dedicated uplink RLCs (from RLC counter DCH_UL_SDU) (UlRabPsStrOther)

Data Source

RNC C-Node

Source Field

VS.DedicatedUplinkSduRlc.UlRabPsStrOther

Source Section

RncEquipment

DedicatedUplinkSduRlcUlRabSRB

Number of SDUs received on dedicated uplink RLCs (from RLC counter DCH_UL_SDU) (UlRabSRB)

Data Source

RNC C-Node

Source Field

VS.DedicatedUplinkSduRlc.UlRabSRB

Source Section

RncEquipment

DlDiscardNonConfTrafficDlRabCsData64

Counts the number of Kilo Bytes of data discarded by I-Node if the source is non-conformant. INode only discards the data above the agreed maximum data-rate. This counter is only triggered for non-conformant sources. (DlRabCsData64)

Data Source

RNC C-Node

Source Field

VS.DlDiscardNonConfTraffic.DlRabCsData64

Source Section

RncEquipment

DlDiscardNonConfTrafficDlRabCsSpeech

Counts the number of Kilo Bytes of data discarded by I-Node if the source is non-conformant. INode only discards the data above the agreed maximum data-rate. This counter is only triggered for non-conformant sources. (DlRabCsSpeech)

Data Source

RNC C-Node

Source Field

VS.DlDiscardNonConfTraffic.DlRabCsSpeech

Source Section

RncEquipment

DlDiscardNonConfTrafficDlRabCsStr

Counts the number of Kilo Bytes of data discarded by I-Node if the source is non-conformant. INode only discards the data above the agreed maximum data-rate. This counter is only triggered for non-conformant sources. (DlRabCsStr)

Data Source

RNC C-Node

Source Field

VS.DlDiscardNonConfTraffic.DlRabCsStr

Source Section

RncEquipment

DlDiscardNonConfTrafficDlRabHsdpa

Counts the number of Kilo Bytes of data discarded by I-Node if the source is non-conformant. INode only discards the data above the agreed maximum data-rate. This counter is only triggered for non-conformant sources. (DlRabHsdpa)

Data Source

RNC C-Node

Source Field

VS.DlDiscardNonConfTraffic.DlRabHsdpa

Source Section

RncEquipment

DlDiscardNonConfTrafficDlRabOther

Counts the number of Kilo Bytes of data discarded by I-Node if the source is non-conformant. INode only discards the data above the agreed maximum data-rate. This counter is only triggered for non-conformant sources. (DlRabOther)

Data Source

RNC C-Node

Source Field

VS.DlDiscardNonConfTraffic.DlRabOther

Source Section

RncEquipment

DlDiscardNonConfTrafficDlRabPsIb128

Counts the number of Kilo Bytes of data discarded by I-Node if the source is non-conformant. INode only discards the data above the agreed maximum data-rate. This counter is only triggered for non-conformant sources. (DlRabPsIb128)

Data Source

RNC C-Node

Source Field

VS.DlDiscardNonConfTraffic.DlRabPsIb128

Source Section

RncEquipment

DlDiscardNonConfTrafficDlRabPsIb16

Counts the number of Kilo Bytes of data discarded by I-Node if the source is non-conformant. INode only discards the data above the agreed maximum data-rate. This counter is only triggered for non-conformant sources. (DlRabPsIb16)

Data Source

RNC C-Node

Source Field

VS.DlDiscardNonConfTraffic.DlRabPsIb16

Source Section

RncEquipment

DlDiscardNonConfTrafficDlRabPsIb256

Counts the number of Kilo Bytes of data discarded by I-Node if the source is non-conformant. INode only discards the data above the agreed maximum data-rate. This counter is only triggered for non-conformant sources. (DlRabPsIb256)

Data Source

RNC C-Node

Source Field

VS.DlDiscardNonConfTraffic.DlRabPsIb256

Source Section

RncEquipment

DlDiscardNonConfTrafficDlRabPsIb32

Counts the number of Kilo Bytes of data discarded by I-Node if the source is non-conformant. INode only discards the data above the agreed maximum data-rate. This counter is only triggered for non-conformant sources. (DlRabPsIb32)

Data Source

RNC C-Node

Source Field

VS.DlDiscardNonConfTraffic.DlRabPsIb32

Source Section

RncEquipment

DlDiscardNonConfTrafficDlRabPsIb384

Counts the number of Kilo Bytes of data discarded by I-Node if the source is non-conformant. INode only discards the data above the agreed maximum data-rate. This counter is only triggered for non-conformant sources. (DlRabPsIb384)

Data Source

RNC C-Node

Source Field

VS.DlDiscardNonConfTraffic.DlRabPsIb384

Source Section

RncEquipment

DlDiscardNonConfTrafficDlRabPsIb64

Counts the number of Kilo Bytes of data discarded by I-Node if the source is non-conformant. INode only discards the data above the agreed maximum data-rate. This counter is only triggered for non-conformant sources. (DlRabPsIb64)

Data Source

RNC C-Node

Source Field

VS.DlDiscardNonConfTraffic.DlRabPsIb64

Source Section

RncEquipment

DlDiscardNonConfTrafficDlRabPsIb8

Counts the number of Kilo Bytes of data discarded by I-Node if the source is non-conformant. INode only discards the data above the agreed maximum data-rate. This counter is only triggered for non-conformant sources. (DlRabPsIb8)

Data Source

RNC C-Node

Source Field

VS.DlDiscardNonConfTraffic.DlRabPsIb8

Source Section

RncEquipment

DlDiscardNonConfTrafficDlRabPsStr128

Counts the number of Kilo Bytes of data discarded by I-Node if the source is non-conformant. INode only discards the data above the agreed maximum data-rate. This counter is only triggered for non-conformant sources. (DlRabPsStr128)

Data Source

RNC C-Node

Source Field

VS.DlDiscardNonConfTraffic.DlRabPsStr128

Source Section

RncEquipment

DlDiscardNonConfTrafficDlRabPsStr256

Counts the number of Kilo Bytes of data discarded by I-Node if the source is non-conformant. INode only discards the data above the agreed maximum data-rate. This counter is only triggered for non-conformant sources. (DlRabPsStr256)

Data Source

RNC C-Node

Source Field

VS.DlDiscardNonConfTraffic.DlRabPsStr256

Source Section

RncEquipment

DlDiscardNonConfTrafficDlRabPsStr384

Counts the number of Kilo Bytes of data discarded by I-Node if the source is non-conformant. INode only discards the data above the agreed maximum data-rate. This counter is only triggered for non-conformant sources. (DlRabPsStr384)

Data Source

RNC C-Node

Source Field

VS.DlDiscardNonConfTraffic.DlRabPsStr384

Source Section

RncEquipment

DlDiscardNonConfTrafficDlRabPsStrOther

Counts the number of Kilo Bytes of data discarded by I-Node if the source is non-conformant. INode only discards the data above the agreed maximum data-rate. This counter is only triggered for non-conformant sources. (DlRabPsStrOther)

Data Source

RNC C-Node

Source Field

VS.DlDiscardNonConfTraffic.DlRabPsStrOther

Source Section

RncEquipment

DlDiscardNonConfTrafficDlRabSRB

Counts the number of Kilo Bytes of data discarded by I-Node if the source is non-conformant. INode only discards the data above the agreed maximum data-rate. This counter is only triggered for non-conformant sources. (DlRabSRB)

Data Source

RNC C-Node

Source Field

VS.DlDiscardNonConfTraffic.DlRabSRB

Source Section

RncEquipment

FailedRrcSmcWithCoreNetworkCs

Number of Security Mode Commands that fail because the corresponding RRC command fails (WithCoreNetworkCs)

Data Source

RNC C-Node

Source Field

VS.FailedRrcSmc.WithCoreNetworkCs

Source Section

RncEquipment

FailedRrcSmcWithCoreNetworkPs

Number of Security Mode Commands that fail because the corresponding RRC command fails (WithCoreNetworkPs)

Data Source

RNC C-Node

Source Field

VS.FailedRrcSmc.WithCoreNetworkPs

Source Section

RncEquipment

IrmcacDowngradedHighPriorityDlRbOther

Number of RAB assignments for high priority users (Allocation/Retention Priority of 0) that are downgraded by iRM. (DlRbOther)

Data Source

RNC C-Node

Source Field

VS.IrmcacDowngradedHighPriority.DlRbOther

Source Section

RncEquipment

IrmcacDowngradedHighPriorityDlRbPsIB128

Number of RAB assignments for high priority users (Allocation/Retention Priority of 0) that are downgraded by iRM. (DlRbPsIB128)

Data Source

RNC C-Node

Source Field

VS.IrmcacDowngradedHighPriority.DlRbPsIB128

Source Section

RncEquipment

IrmcacDowngradedHighPriorityDlRbPsIB16

Number of RAB assignments for high priority users (Allocation/Retention Priority of 0) that are downgraded by iRM. (DlRbPsIB16)

Data Source

RNC C-Node

Source Field

VS.IrmcacDowngradedHighPriority.DlRbPsIB16

Source Section

RncEquipment

IrmcacDowngradedHighPriorityDlRbPsIB256

Number of RAB assignments for high priority users (Allocation/Retention Priority of 0) that are downgraded by iRM. (DlRbPsIB256)

Data Source

RNC C-Node

Source Field

VS.IrmcacDowngradedHighPriority.DlRbPsIB256

Source Section

RncEquipment

IrmcacDowngradedHighPriorityDlRbPsIB32

Number of RAB assignments for high priority users (Allocation/Retention Priority of 0) that are downgraded by iRM. (DlRbPsIB32)

Data Source

RNC C-Node

Source Field

VS.IrmcacDowngradedHighPriority.DlRbPsIB32

Source Section

RncEquipment

IrmcacDowngradedHighPriorityDlRbPsIB384

Number of RAB assignments for high priority users (Allocation/Retention Priority of 0) that are downgraded by iRM. (DlRbPsIB384)

Data Source

RNC C-Node

Source Field

VS.IrmcacDowngradedHighPriority.DlRbPsIB384

Source Section

RncEquipment

IrmcacDowngradedHighPriorityDlRbPsIB64

Number of RAB assignments for high priority users (Allocation/Retention Priority of 0) that are downgraded by iRM. (DlRbPsIB64)

Data Source

RNC C-Node

Source Field

VS.IrmcacDowngradedHighPriority.DlRbPsIB64

Source Section

RncEquipment

IrmcacDowngradedHighPriorityDlRbPsIB8

Number of RAB assignments for high priority users (Allocation/Retention Priority of 0) that are downgraded by iRM. (DlRbPsIB8)

Data Source

RNC C-Node

Source Field

VS.IrmcacDowngradedHighPriority.DlRbPsIB8

Source Section

RncEquipment

IrmcacDowngradedHighPriorityDlRbPsStr128

Number of RAB assignments for high priority users (Allocation/Retention Priority of 0) that are downgraded by iRM. (DlRbPsStr128)

Data Source

RNC C-Node

Source Field

VS.IrmcacDowngradedHighPriority.DlRbPsStr128

Source Section

RncEquipment

IrmcacDowngradedHighPriorityDlRbPsStr256

Number of RAB assignments for high priority users (Allocation/Retention Priority of 0) that are downgraded by iRM. (DlRbPsStr256)

Data Source

RNC C-Node

Source Field

VS.IrmcacDowngradedHighPriority.DlRbPsStr256

Source Section

RncEquipment

IrmcacDowngradedHighPriorityDlRbPsStr384

Number of RAB assignments for high priority users (Allocation/Retention Priority of 0) that are downgraded by iRM. (DlRbPsStr384)

Data Source

RNC C-Node

Source Field

VS.IrmcacDowngradedHighPriority.DlRbPsStr384

Source Section

RncEquipment

IrmcacDowngradedHighPriorityDlRbPsStr64

Number of RAB assignments for high priority users (Allocation/Retention Priority of 0) that are downgraded by iRM. (DlRbPsStr64)

Data Source

RNC C-Node

Source Field

VS.IrmcacDowngradedHighPriority.DlRbPsStr64

Source Section

RncEquipment

IrmcacDowngradedHighPriorityDlRbPsStrLt64

Number of RAB assignments for high priority users (Allocation/Retention Priority of 0) that are downgraded by iRM. (DlRbPsStrLt64)

Data Source

RNC C-Node

Source Field

VS.IrmcacDowngradedHighPriority.DlRbPsStrLt64

Source Section

RncEquipment

IrmcacDowngradedLowPriorityDlRbOther

Number of RAB assignments for low priority users (Allocation/Retention Priority of 2) that are downgraded by iRM. (DlRbOther)

Data Source

RNC C-Node

Source Field

VS.IrmcacDowngradedLowPriority.DlRbOther

Source Section

RncEquipment

IrmcacDowngradedLowPriorityDlRbPsIB128

Number of RAB assignments for low priority users (Allocation/Retention Priority of 2) that are downgraded by iRM. (DlRbPsIB128)

Data Source

RNC C-Node

Source Field

VS.IrmcacDowngradedLowPriority.DlRbPsIB128

Source Section

RncEquipment

IrmcacDowngradedLowPriorityDlRbPsIB16

Number of RAB assignments for low priority users (Allocation/Retention Priority of 2) that are downgraded by iRM. (DlRbPsIB16)

Data Source

RNC C-Node

Source Field

VS.IrmcacDowngradedLowPriority.DlRbPsIB16

Source Section

RncEquipment

IrmcacDowngradedLowPriorityDlRbPsIB256

Number of RAB assignments for low priority users (Allocation/Retention Priority of 2) that are downgraded by iRM. (DlRbPsIB256)

Data Source

RNC C-Node

Source Field

VS.IrmcacDowngradedLowPriority.DlRbPsIB256

Source Section

RncEquipment

IrmcacDowngradedLowPriorityDlRbPsIB32

Number of RAB assignments for low priority users (Allocation/Retention Priority of 2) that are downgraded by iRM. (DlRbPsIB32)

Data Source

RNC C-Node

Source Field

VS.IrmcacDowngradedLowPriority.DlRbPsIB32

Source Section

RncEquipment

IrmcacDowngradedLowPriorityDlRbPsIB384

Number of RAB assignments for low priority users (Allocation/Retention Priority of 2) that are downgraded by iRM. (DlRbPsIB384)

Data Source

RNC C-Node

Source Field

VS.IrmcacDowngradedLowPriority.DlRbPsIB384

Source Section

RncEquipment

IrmcacDowngradedLowPriorityDlRbPsIB64

Number of RAB assignments for low priority users (Allocation/Retention Priority of 2) that are downgraded by iRM. (DlRbPsIB64)

Data Source

RNC C-Node

Source Field

VS.IrmcacDowngradedLowPriority.DlRbPsIB64

Source Section

RncEquipment

IrmcacDowngradedLowPriorityDlRbPsIB8

Number of RAB assignments for low priority users (Allocation/Retention Priority of 2) that are downgraded by iRM. (DlRbPsIB8)

Data Source

RNC C-Node

Source Field

VS.IrmcacDowngradedLowPriority.DlRbPsIB8

Source Section

RncEquipment

IrmcacDowngradedLowPriorityDlRbPsStr128

Number of RAB assignments for low priority users (Allocation/Retention Priority of 2) that are downgraded by iRM. (DlRbPsStr128)

Data Source

RNC C-Node

Source Field

VS.IrmcacDowngradedLowPriority.DlRbPsStr128

Source Section

RncEquipment

IrmcacDowngradedLowPriorityDlRbPsStr256

Number of RAB assignments for low priority users (Allocation/Retention Priority of 2) that are downgraded by iRM. (DlRbPsStr256)

Data Source

RNC C-Node

Source Field

VS.IrmcacDowngradedLowPriority.DlRbPsStr256

Source Section

RncEquipment

IrmcacDowngradedLowPriorityDlRbPsStr384

Number of RAB assignments for low priority users (Allocation/Retention Priority of 2) that are downgraded by iRM. (DlRbPsStr384)

Data Source

RNC C-Node

Source Field

VS.IrmcacDowngradedLowPriority.DlRbPsStr384

Source Section

RncEquipment

IrmcacDowngradedLowPriorityDlRbPsStr64

Number of RAB assignments for low priority users (Allocation/Retention Priority of 2) that are downgraded by iRM. (DlRbPsStr64)

Data Source

RNC C-Node

Source Field

VS.IrmcacDowngradedLowPriority.DlRbPsStr64

Source Section

RncEquipment

IrmcacDowngradedLowPriorityDlRbPsStrLt64

Number of RAB assignments for low priority users (Allocation/Retention Priority of 2) that are downgraded by iRM. (DlRbPsStrLt64)

Data Source

RNC C-Node

Source Field

VS.IrmcacDowngradedLowPriority.DlRbPsStrLt64

Source Section

RncEquipment

IrmcacDowngradedMediumPriorityDlRbOther

Number of RAB assignments for medium priority users (Allocation/Retention Priority of 1) that are downgraded by iRM. (DlRbOther)

Data Source

RNC C-Node

Source Field

VS.IrmcacDowngradedMediumPriority.DlRbOther

Source Section

RncEquipment

IrmcacDowngradedMediumPriorityDlRbPsIB128

Number of RAB assignments for medium priority users (Allocation/Retention Priority of 1) that are downgraded by iRM. (DlRbPsIB128)

Data Source

RNC C-Node

Source Field

VS.IrmcacDowngradedMediumPriority.DlRbPsIB128

Source Section

RncEquipment

IrmcacDowngradedMediumPriorityDlRbPsIB16

Number of RAB assignments for medium priority users (Allocation/Retention Priority of 1) that are downgraded by iRM. (DlRbPsIB16)

Data Source

RNC C-Node

Source Field

VS.IrmcacDowngradedMediumPriority.DlRbPsIB16

Source Section

RncEquipment

IrmcacDowngradedMediumPriorityDlRbPsIB256

Number of RAB assignments for medium priority users (Allocation/Retention Priority of 1) that are downgraded by iRM. (DlRbPsIB256)

Data Source

RNC C-Node

Source Field

VS.IrmcacDowngradedMediumPriority.DlRbPsIB256

Source Section

RncEquipment

IrmcacDowngradedMediumPriorityDlRbPsIB32

Number of RAB assignments for medium priority users (Allocation/Retention Priority of 1) that are downgraded by iRM. (DlRbPsIB32)

Data Source

RNC C-Node

Source Field

VS.IrmcacDowngradedMediumPriority.DlRbPsIB32

Source Section

RncEquipment

IrmcacDowngradedMediumPriorityDlRbPsIB384

Number of RAB assignments for medium priority users (Allocation/Retention Priority of 1) that are downgraded by iRM. (DlRbPsIB384)

Data Source

RNC C-Node

Source Field

VS.IrmcacDowngradedMediumPriority.DlRbPsIB384

Source Section

RncEquipment

IrmcacDowngradedMediumPriorityDlRbPsIB64

Number of RAB assignments for medium priority users (Allocation/Retention Priority of 1) that are downgraded by iRM. (DlRbPsIB64)

Data Source

RNC C-Node

Source Field

VS.IrmcacDowngradedMediumPriority.DlRbPsIB64

Source Section

RncEquipment

IrmcacDowngradedMediumPriorityDlRbPsIB8

Number of RAB assignments for medium priority users (Allocation/Retention Priority of 1) that are downgraded by iRM. (DlRbPsIB8)

Data Source

RNC C-Node

Source Field

VS.IrmcacDowngradedMediumPriority.DlRbPsIB8

Source Section

RncEquipment

IrmcacDowngradedMediumPriorityDlRbPsStr128

Number of RAB assignments for medium priority users (Allocation/Retention Priority of 1) that are downgraded by iRM. (DlRbPsStr128)

Data Source

RNC C-Node

Source Field

VS.IrmcacDowngradedMediumPriority.DlRbPsStr128

Source Section

RncEquipment

IrmcacDowngradedMediumPriorityDlRbPsStr256

Number of RAB assignments for medium priority users (Allocation/Retention Priority of 1) that are downgraded by iRM. (DlRbPsStr256)

Data Source

RNC C-Node

Source Field

VS.IrmcacDowngradedMediumPriority.DlRbPsStr256

Source Section

RncEquipment

IrmcacDowngradedMediumPriorityDlRbPsStr384

Number of RAB assignments for medium priority users (Allocation/Retention Priority of 1) that are downgraded by iRM. (DlRbPsStr384)

Data Source

RNC C-Node

Source Field

VS.IrmcacDowngradedMediumPriority.DlRbPsStr384

Source Section

RncEquipment

IrmcacDowngradedMediumPriorityDlRbPsStr64

Number of RAB assignments for medium priority users (Allocation/Retention Priority of 1) that are downgraded by iRM. (DlRbPsStr64)

Data Source

RNC C-Node

Source Field

VS.IrmcacDowngradedMediumPriority.DlRbPsStr64

Source Section

RncEquipment

IrmcacDowngradedMediumPriorityDlRbPsStrLt64

Number of RAB assignments for medium priority users (Allocation/Retention Priority of 1) that are downgraded by iRM. (DlRbPsStrLt64)

Data Source

RNC C-Node

Source Field

VS.IrmcacDowngradedMediumPriority.DlRbPsStrLt64

Source Section

RncEquipment

IrmcacMaintainedHighPriorityDlRbOther

Number of RAB assignments for high priority users (Allocation/Retention Priority of 0) that are maintained as requested by iRM. (DlRbOther)

Data Source

RNC C-Node

Source Field

VS.IrmcacMaintainedHighPriority.DlRbOther

Source Section

RncEquipment

IrmcacMaintainedHighPriorityDlRbPsIB128

Number of RAB assignments for high priority users (Allocation/Retention Priority of 0) that are maintained as requested by iRM. (DlRbPsIB128)

Data Source

RNC C-Node

Source Field

VS.IrmcacMaintainedHighPriority.DlRbPsIB128

Source Section

RncEquipment

IrmcacMaintainedHighPriorityDlRbPsIB16

Number of RAB assignments for high priority users (Allocation/Retention Priority of 0) that are maintained as requested by iRM. (DlRbPsIB16)

Data Source

RNC C-Node

Source Field

VS.IrmcacMaintainedHighPriority.DlRbPsIB16

Source Section

RncEquipment

IrmcacMaintainedHighPriorityDlRbPsIB256

Number of RAB assignments for high priority users (Allocation/Retention Priority of 0) that are maintained as requested by iRM. (DlRbPsIB256)

Data Source

RNC C-Node

Source Field

VS.IrmcacMaintainedHighPriority.DlRbPsIB256

Source Section

RncEquipment

IrmcacMaintainedHighPriorityDlRbPsIB32

Number of RAB assignments for high priority users (Allocation/Retention Priority of 0) that are maintained as requested by iRM. (DlRbPsIB32)

Data Source

RNC C-Node

Source Field

VS.IrmcacMaintainedHighPriority.DlRbPsIB32

Source Section

RncEquipment

IrmcacMaintainedHighPriorityDlRbPsIB384

Number of RAB assignments for high priority users (Allocation/Retention Priority of 0) that are maintained as requested by iRM. (DlRbPsIB384)

Data Source

RNC C-Node

Source Field

VS.IrmcacMaintainedHighPriority.DlRbPsIB384

Source Section

RncEquipment

IrmcacMaintainedHighPriorityDlRbPsIB64

Number of RAB assignments for high priority users (Allocation/Retention Priority of 0) that are maintained as requested by iRM. (DlRbPsIB64)

Data Source

RNC C-Node

Source Field

VS.IrmcacMaintainedHighPriority.DlRbPsIB64

Source Section

RncEquipment

IrmcacMaintainedHighPriorityDlRbPsIB8

Number of RAB assignments for high priority users (Allocation/Retention Priority of 0) that are maintained as requested by iRM. (DlRbPsIB8)

Data Source

RNC C-Node

Source Field

VS.IrmcacMaintainedHighPriority.DlRbPsIB8

Source Section

RncEquipment

IrmcacMaintainedHighPriorityDlRbPsStr128

Number of RAB assignments for high priority users (Allocation/Retention Priority of 0) that are maintained as requested by iRM. (DlRbPsStr128)

Data Source

RNC C-Node

Source Field

VS.IrmcacMaintainedHighPriority.DlRbPsStr128

Source Section

RncEquipment

IrmcacMaintainedHighPriorityDlRbPsStr256

Number of RAB assignments for high priority users (Allocation/Retention Priority of 0) that are maintained as requested by iRM. (DlRbPsStr256)

Data Source

RNC C-Node

Source Field

VS.IrmcacMaintainedHighPriority.DlRbPsStr256

Source Section

RncEquipment

IrmcacMaintainedHighPriorityDlRbPsStr384

Number of RAB assignments for high priority users (Allocation/Retention Priority of 0) that are maintained as requested by iRM. (DlRbPsStr384)

Data Source

RNC C-Node

Source Field

VS.IrmcacMaintainedHighPriority.DlRbPsStr384

Source Section

RncEquipment

IrmcacMaintainedHighPriorityDlRbPsStr64

Number of RAB assignments for high priority users (Allocation/Retention Priority of 0) that are maintained as requested by iRM. (DlRbPsStr64)

Data Source

RNC C-Node

Source Field

VS.IrmcacMaintainedHighPriority.DlRbPsStr64

Source Section

RncEquipment

IrmcacMaintainedHighPriorityDlRbPsStrLt64

Number of RAB assignments for high priority users (Allocation/Retention Priority of 0) that are maintained as requested by iRM. (DlRbPsStrLt64)

Data Source

RNC C-Node

Source Field

VS.IrmcacMaintainedHighPriority.DlRbPsStrLt64

Source Section

RncEquipment

IrmcacMaintainedLowPriorityDlRbOther

Number of RAB assignments for low priority users (Allocation/Retention Priority of 2) that are maintained as requested by iRM. (DlRbOther)

Data Source

RNC C-Node

Source Field

VS.IrmcacMaintainedLowPriority.DlRbOther

Source Section

RncEquipment

IrmcacMaintainedLowPriorityDlRbPsIB128

Number of RAB assignments for low priority users (Allocation/Retention Priority of 2) that are maintained as requested by iRM. (DlRbPsIB128)

Data Source

RNC C-Node

Source Field

VS.IrmcacMaintainedLowPriority.DlRbPsIB128

Source Section

RncEquipment

IrmcacMaintainedLowPriorityDlRbPsIB16

Number of RAB assignments for low priority users (Allocation/Retention Priority of 2) that are maintained as requested by iRM. (DlRbPsIB16)

Data Source

RNC C-Node

Source Field

VS.IrmcacMaintainedLowPriority.DlRbPsIB16

Source Section

RncEquipment

IrmcacMaintainedLowPriorityDlRbPsIB256

Number of RAB assignments for low priority users (Allocation/Retention Priority of 2) that are maintained as requested by iRM. (DlRbPsIB256)

Data Source

RNC C-Node

Source Field

VS.IrmcacMaintainedLowPriority.DlRbPsIB256

Source Section

RncEquipment

IrmcacMaintainedLowPriorityDlRbPsIB32

Number of RAB assignments for low priority users (Allocation/Retention Priority of 2) that are maintained as requested by iRM. (DlRbPsIB32)

Data Source

RNC C-Node

Source Field

VS.IrmcacMaintainedLowPriority.DlRbPsIB32

Source Section

RncEquipment

IrmcacMaintainedLowPriorityDlRbPsIB384

Number of RAB assignments for low priority users (Allocation/Retention Priority of 2) that are maintained as requested by iRM. (DlRbPsIB384)

Data Source

RNC C-Node

Source Field

VS.IrmcacMaintainedLowPriority.DlRbPsIB384

Source Section

RncEquipment

IrmcacMaintainedLowPriorityDlRbPsIB64

Number of RAB assignments for low priority users (Allocation/Retention Priority of 2) that are maintained as requested by iRM. (DlRbPsIB64)

Data Source

RNC C-Node

Source Field

VS.IrmcacMaintainedLowPriority.DlRbPsIB64

Source Section

RncEquipment

IrmcacMaintainedLowPriorityDlRbPsIB8

Number of RAB assignments for low priority users (Allocation/Retention Priority of 2) that are maintained as requested by iRM. (DlRbPsIB8)

Data Source

RNC C-Node

Source Field

VS.IrmcacMaintainedLowPriority.DlRbPsIB8

Source Section

RncEquipment

IrmcacMaintainedLowPriorityDlRbPsStr128

Number of RAB assignments for low priority users (Allocation/Retention Priority of 2) that are maintained as requested by iRM. (DlRbPsStr128)

Data Source

RNC C-Node

Source Field

VS.IrmcacMaintainedLowPriority.DlRbPsStr128

Source Section

RncEquipment

IrmcacMaintainedLowPriorityDlRbPsStr256

Number of RAB assignments for low priority users (Allocation/Retention Priority of 2) that are maintained as requested by iRM. (DlRbPsStr256)

Data Source

RNC C-Node

Source Field

VS.IrmcacMaintainedLowPriority.DlRbPsStr256

Source Section

RncEquipment

IrmcacMaintainedLowPriorityDlRbPsStr384

Number of RAB assignments for low priority users (Allocation/Retention Priority of 2) that are maintained as requested by iRM. (DlRbPsStr384)

Data Source

RNC C-Node

Source Field

VS.IrmcacMaintainedLowPriority.DlRbPsStr384

Source Section

RncEquipment

IrmcacMaintainedLowPriorityDlRbPsStr64

Number of RAB assignments for low priority users (Allocation/Retention Priority of 2) that are maintained as requested by iRM. (DlRbPsStr64)

Data Source

RNC C-Node

Source Field

VS.IrmcacMaintainedLowPriority.DlRbPsStr64

Source Section

RncEquipment

IrmcacMaintainedLowPriorityDlRbPsStrLt64

Number of RAB assignments for low priority users (Allocation/Retention Priority of 2) that are maintained as requested by iRM. (DlRbPsStrLt64)

Data Source

RNC C-Node

Source Field

VS.IrmcacMaintainedLowPriority.DlRbPsStrLt64

Source Section

RncEquipment

IrmcacMaintainedMediumPriorityDlRbOther

Number of RAB assignments for medium priority users (Allocation/Retention Priority of 1) that are maintained as requested by iRM. (DlRbOther)

Data Source

RNC C-Node

Source Field

VS.IrmcacMaintainedMediumPriority.DlRbOther

Source Section

RncEquipment

IrmcacMaintainedMediumPriorityDlRbPsIB128

Number of RAB assignments for medium priority users (Allocation/Retention Priority of 1) that are maintained as requested by iRM. (DlRbPsIB128)

Data Source

RNC C-Node

Source Field

VS.IrmcacMaintainedMediumPriority.DlRbPsIB128

Source Section

RncEquipment

IrmcacMaintainedMediumPriorityDlRbPsIB16

Number of RAB assignments for medium priority users (Allocation/Retention Priority of 1) that are maintained as requested by iRM. (DlRbPsIB16)

Data Source

RNC C-Node

Source Field

VS.IrmcacMaintainedMediumPriority.DlRbPsIB16

Source Section

RncEquipment

IrmcacMaintainedMediumPriorityDlRbPsIB256

Number of RAB assignments for medium priority users (Allocation/Retention Priority of 1) that are maintained as requested by iRM. (DlRbPsIB256)

Data Source

RNC C-Node

Source Field

VS.IrmcacMaintainedMediumPriority.DlRbPsIB256

Source Section

RncEquipment

IrmcacMaintainedMediumPriorityDlRbPsIB32

Number of RAB assignments for medium priority users (Allocation/Retention Priority of 1) that are maintained as requested by iRM. (DlRbPsIB32)

Data Source

RNC C-Node

Source Field

VS.IrmcacMaintainedMediumPriority.DlRbPsIB32

Source Section

RncEquipment

IrmcacMaintainedMediumPriorityDlRbPsIB384

Number of RAB assignments for medium priority users (Allocation/Retention Priority of 1) that are maintained as requested by iRM. (DlRbPsIB384)

Data Source

RNC C-Node

Source Field

VS.IrmcacMaintainedMediumPriority.DlRbPsIB384

Source Section

RncEquipment

IrmcacMaintainedMediumPriorityDlRbPsIB64

Number of RAB assignments for medium priority users (Allocation/Retention Priority of 1) that are maintained as requested by iRM. (DlRbPsIB64)

Data Source

RNC C-Node

Source Field

VS.IrmcacMaintainedMediumPriority.DlRbPsIB64

Source Section

RncEquipment

IrmcacMaintainedMediumPriorityDlRbPsIB8

Number of RAB assignments for medium priority users (Allocation/Retention Priority of 1) that are maintained as requested by iRM. (DlRbPsIB8)

Data Source

RNC C-Node

Source Field

VS.IrmcacMaintainedMediumPriority.DlRbPsIB8

Source Section

RncEquipment

IrmcacMaintainedMediumPriorityDlRbPsStr128

Number of RAB assignments for medium priority users (Allocation/Retention Priority of 1) that are maintained as requested by iRM. (DlRbPsStr128)

Data Source

RNC C-Node

Source Field

VS.IrmcacMaintainedMediumPriority.DlRbPsStr128

Source Section

RncEquipment

IrmcacMaintainedMediumPriorityDlRbPsStr256

Number of RAB assignments for medium priority users (Allocation/Retention Priority of 1) that are maintained as requested by iRM. (DlRbPsStr256)

Data Source

RNC C-Node

Source Field

VS.IrmcacMaintainedMediumPriority.DlRbPsStr256

Source Section

RncEquipment

IrmcacMaintainedMediumPriorityDlRbPsStr384

Number of RAB assignments for medium priority users (Allocation/Retention Priority of 1) that are maintained as requested by iRM. (DlRbPsStr384)

Data Source

RNC C-Node

Source Field

VS.IrmcacMaintainedMediumPriority.DlRbPsStr384

Source Section

RncEquipment

IrmcacMaintainedMediumPriorityDlRbPsStr64

Number of RAB assignments for medium priority users (Allocation/Retention Priority of 1) that are maintained as requested by iRM. (DlRbPsStr64)

Data Source

RNC C-Node

Source Field

VS.IrmcacMaintainedMediumPriority.DlRbPsStr64

Source Section

RncEquipment

IrmcacMaintainedMediumPriorityDlRbPsStrLt64

Number of RAB assignments for medium priority users (Allocation/Retention Priority of 1) that are maintained as requested by iRM. (DlRbPsStrLt64)

Data Source

RNC C-Node

Source Field

VS.IrmcacMaintainedMediumPriority.DlRbPsStrLt64

Source Section

RncEquipment

IrmcacRejectedHighPriorityDlRbOther

Number of RAB assignments for high priority users (Allocation/Retention Priority of 0) that are rejected by iRM. (DlRbOther)

Data Source

RNC C-Node

Source Field

VS.IrmcacRejectedHighPriority.DlRbOther

Source Section

RncEquipment

IrmcacRejectedHighPriorityDlRbPsIB128

Number of RAB assignments for high priority users (Allocation/Retention Priority of 0) that are rejected by iRM. (DlRbPsIB128)

Data Source

RNC C-Node

Source Field

VS.IrmcacRejectedHighPriority.DlRbPsIB128

Source Section

RncEquipment

IrmcacRejectedHighPriorityDlRbPsIB16

Number of RAB assignments for high priority users (Allocation/Retention Priority of 0) that are rejected by iRM. (DlRbPsIB16)

Data Source

RNC C-Node

Source Field

VS.IrmcacRejectedHighPriority.DlRbPsIB16

Source Section

RncEquipment

IrmcacRejectedHighPriorityDlRbPsIB256

Number of RAB assignments for high priority users (Allocation/Retention Priority of 0) that are rejected by iRM. (DlRbPsIB256)

Data Source

RNC C-Node

Source Field

VS.IrmcacRejectedHighPriority.DlRbPsIB256

Source Section

RncEquipment

IrmcacRejectedHighPriorityDlRbPsIB32

Number of RAB assignments for high priority users (Allocation/Retention Priority of 0) that are rejected by iRM. (DlRbPsIB32)

Data Source

RNC C-Node

Source Field

VS.IrmcacRejectedHighPriority.DlRbPsIB32

Source Section

RncEquipment

IrmcacRejectedHighPriorityDlRbPsIB384

Number of RAB assignments for high priority users (Allocation/Retention Priority of 0) that are rejected by iRM. (DlRbPsIB384)

Data Source

RNC C-Node

Source Field

VS.IrmcacRejectedHighPriority.DlRbPsIB384

Source Section

RncEquipment

IrmcacRejectedHighPriorityDlRbPsIB64

Number of RAB assignments for high priority users (Allocation/Retention Priority of 0) that are rejected by iRM. (DlRbPsIB64)

Data Source

RNC C-Node

Source Field

VS.IrmcacRejectedHighPriority.DlRbPsIB64

Source Section

RncEquipment

IrmcacRejectedHighPriorityDlRbPsIB8

Number of RAB assignments for high priority users (Allocation/Retention Priority of 0) that are rejected by iRM. (DlRbPsIB8)

Data Source

RNC C-Node

Source Field

VS.IrmcacRejectedHighPriority.DlRbPsIB8

Source Section

RncEquipment

IrmcacRejectedHighPriorityDlRbPsStr128

Number of RAB assignments for high priority users (Allocation/Retention Priority of 0) that are rejected by iRM. (DlRbPsStr128)

Data Source

RNC C-Node

Source Field

VS.IrmcacRejectedHighPriority.DlRbPsStr128

Source Section

RncEquipment

IrmcacRejectedHighPriorityDlRbPsStr256

Number of RAB assignments for high priority users (Allocation/Retention Priority of 0) that are rejected by iRM. (DlRbPsStr256)

Data Source

RNC C-Node

Source Field

VS.IrmcacRejectedHighPriority.DlRbPsStr256

Source Section

RncEquipment

IrmcacRejectedHighPriorityDlRbPsStr384

Number of RAB assignments for high priority users (Allocation/Retention Priority of 0) that are rejected by iRM. (DlRbPsStr384)

Data Source

RNC C-Node

Source Field

VS.IrmcacRejectedHighPriority.DlRbPsStr384

Source Section

RncEquipment

IrmcacRejectedHighPriorityDlRbPsStr64

Number of RAB assignments for high priority users (Allocation/Retention Priority of 0) that are rejected by iRM. (DlRbPsStr64)

Data Source

RNC C-Node

Source Field

VS.IrmcacRejectedHighPriority.DlRbPsStr64

Source Section

RncEquipment

IrmcacRejectedHighPriorityDlRbPsStrLt64

Number of RAB assignments for high priority users (Allocation/Retention Priority of 0) that are rejected by iRM. (DlRbPsStrLt64)

Data Source

RNC C-Node

Source Field

VS.IrmcacRejectedHighPriority.DlRbPsStrLt64

Source Section

RncEquipment

IrmcacRejectedLowPriorityDlRbOther

Number of RAB assignments for low priority users (Allocation/Retention Priority of 2) that are rejected by iRM. (DlRbOther)

Data Source

RNC C-Node

Source Field

VS.IrmcacRejectedLowPriority.DlRbOther

Source Section

RncEquipment

IrmcacRejectedLowPriorityDlRbPsIB128

Number of RAB assignments for low priority users (Allocation/Retention Priority of 2) that are rejected by iRM. (DlRbPsIB128)

Data Source

RNC C-Node

Source Field

VS.IrmcacRejectedLowPriority.DlRbPsIB128

Source Section

RncEquipment

IrmcacRejectedLowPriorityDlRbPsIB16

Number of RAB assignments for low priority users (Allocation/Retention Priority of 2) that are rejected by iRM. (DlRbPsIB16)

Data Source

RNC C-Node

Source Field

VS.IrmcacRejectedLowPriority.DlRbPsIB16

Source Section

RncEquipment

IrmcacRejectedLowPriorityDlRbPsIB256

Number of RAB assignments for low priority users (Allocation/Retention Priority of 2) that are rejected by iRM. (DlRbPsIB256)

Data Source

RNC C-Node

Source Field

VS.IrmcacRejectedLowPriority.DlRbPsIB256

Source Section

RncEquipment

IrmcacRejectedLowPriorityDlRbPsIB32

Number of RAB assignments for low priority users (Allocation/Retention Priority of 2) that are rejected by iRM. (DlRbPsIB32)

Data Source

RNC C-Node

Source Field

VS.IrmcacRejectedLowPriority.DlRbPsIB32

Source Section

RncEquipment

IrmcacRejectedLowPriorityDlRbPsIB384

Number of RAB assignments for low priority users (Allocation/Retention Priority of 2) that are rejected by iRM. (DlRbPsIB384)

Data Source

RNC C-Node

Source Field

VS.IrmcacRejectedLowPriority.DlRbPsIB384

Source Section

RncEquipment

IrmcacRejectedLowPriorityDlRbPsIB64

Number of RAB assignments for low priority users (Allocation/Retention Priority of 2) that are rejected by iRM. (DlRbPsIB64)

Data Source

RNC C-Node

Source Field

VS.IrmcacRejectedLowPriority.DlRbPsIB64

Source Section

RncEquipment

IrmcacRejectedLowPriorityDlRbPsIB8

Number of RAB assignments for low priority users (Allocation/Retention Priority of 2) that are rejected by iRM. (DlRbPsIB8)

Data Source

RNC C-Node

Source Field

VS.IrmcacRejectedLowPriority.DlRbPsIB8

Source Section

RncEquipment

IrmcacRejectedLowPriorityDlRbPsStr128

Number of RAB assignments for low priority users (Allocation/Retention Priority of 2) that are rejected by iRM. (DlRbPsStr128)

Data Source

RNC C-Node

Source Field

VS.IrmcacRejectedLowPriority.DlRbPsStr128

Source Section

RncEquipment

IrmcacRejectedLowPriorityDlRbPsStr256

Number of RAB assignments for low priority users (Allocation/Retention Priority of 2) that are rejected by iRM. (DlRbPsStr256)

Data Source

RNC C-Node

Source Field

VS.IrmcacRejectedLowPriority.DlRbPsStr256

Source Section

RncEquipment

IrmcacRejectedLowPriorityDlRbPsStr384

Number of RAB assignments for low priority users (Allocation/Retention Priority of 2) that are rejected by iRM. (DlRbPsStr384)

Data Source

RNC C-Node

Source Field

VS.IrmcacRejectedLowPriority.DlRbPsStr384

Source Section

RncEquipment

IrmcacRejectedLowPriorityDlRbPsStr64

Number of RAB assignments for low priority users (Allocation/Retention Priority of 2) that are rejected by iRM. (DlRbPsStr64)

Data Source

RNC C-Node

Source Field

VS.IrmcacRejectedLowPriority.DlRbPsStr64

Source Section

RncEquipment

IrmcacRejectedLowPriorityDlRbPsStrLt64

Number of RAB assignments for low priority users (Allocation/Retention Priority of 2) that are rejected by iRM. (DlRbPsStrLt64)

Data Source

RNC C-Node

Source Field

VS.IrmcacRejectedLowPriority.DlRbPsStrLt64

Source Section

RncEquipment

IrmcacRejectedMediumPriorityDlRbOther

Number of RAB assignments for medium priority users (Allocation/Retention Priority of 1) that are rejected by iRM. (DlRbOther)

Data Source

RNC C-Node

Source Field

VS.IrmcacRejectedMediumPriority.DlRbOther

Source Section

RncEquipment

IrmcacRejectedMediumPriorityDlRbPsIB128

Number of RAB assignments for medium priority users (Allocation/Retention Priority of 1) that are rejected by iRM. (DlRbPsIB128)

Data Source

RNC C-Node

Source Field

VS.IrmcacRejectedMediumPriority.DlRbPsIB128

Source Section

RncEquipment

IrmcacRejectedMediumPriorityDlRbPsIB16

Number of RAB assignments for medium priority users (Allocation/Retention Priority of 1) that are rejected by iRM. (DlRbPsIB16)

Data Source

RNC C-Node

Source Field

VS.IrmcacRejectedMediumPriority.DlRbPsIB16

Source Section

RncEquipment

IrmcacRejectedMediumPriorityDlRbPsIB256

Number of RAB assignments for medium priority users (Allocation/Retention Priority of 1) that are rejected by iRM. (DlRbPsIB256)

Data Source

RNC C-Node

Source Field

VS.IrmcacRejectedMediumPriority.DlRbPsIB256

Source Section

RncEquipment

IrmcacRejectedMediumPriorityDlRbPsIB32

Number of RAB assignments for medium priority users (Allocation/Retention Priority of 1) that are rejected by iRM. (DlRbPsIB32)

Data Source

RNC C-Node

Source Field

VS.IrmcacRejectedMediumPriority.DlRbPsIB32

Source Section

RncEquipment

IrmcacRejectedMediumPriorityDlRbPsIB384

Number of RAB assignments for medium priority users (Allocation/Retention Priority of 1) that are rejected by iRM. (DlRbPsIB384)

Data Source

RNC C-Node

Source Field

VS.IrmcacRejectedMediumPriority.DlRbPsIB384

Source Section

RncEquipment

IrmcacRejectedMediumPriorityDlRbPsIB64

Number of RAB assignments for medium priority users (Allocation/Retention Priority of 1) that are rejected by iRM. (DlRbPsIB64)

Data Source

RNC C-Node

Source Field

VS.IrmcacRejectedMediumPriority.DlRbPsIB64

Source Section

RncEquipment

IrmcacRejectedMediumPriorityDlRbPsIB8

Number of RAB assignments for medium priority users (Allocation/Retention Priority of 1) that are rejected by iRM. (DlRbPsIB8)

Data Source

RNC C-Node

Source Field

VS.IrmcacRejectedMediumPriority.DlRbPsIB8

Source Section

RncEquipment

IrmcacRejectedMediumPriorityDlRbPsStr128

Number of RAB assignments for medium priority users (Allocation/Retention Priority of 1) that are rejected by iRM. (DlRbPsStr128)

Data Source

RNC C-Node

Source Field

VS.IrmcacRejectedMediumPriority.DlRbPsStr128

Source Section

RncEquipment

IrmcacRejectedMediumPriorityDlRbPsStr256

Number of RAB assignments for medium priority users (Allocation/Retention Priority of 1) that are rejected by iRM. (DlRbPsStr256)

Data Source

RNC C-Node

Source Field

VS.IrmcacRejectedMediumPriority.DlRbPsStr256

Source Section

RncEquipment

IrmcacRejectedMediumPriorityDlRbPsStr384

Number of RAB assignments for medium priority users (Allocation/Retention Priority of 1) that are rejected by iRM. (DlRbPsStr384)

Data Source

RNC C-Node

Source Field

VS.IrmcacRejectedMediumPriority.DlRbPsStr384

Source Section

RncEquipment

IrmcacRejectedMediumPriorityDlRbPsStr64

Number of RAB assignments for medium priority users (Allocation/Retention Priority of 1) that are rejected by iRM. (DlRbPsStr64)

Data Source

RNC C-Node

Source Field

VS.IrmcacRejectedMediumPriority.DlRbPsStr64

Source Section

RncEquipment

IrmcacRejectedMediumPriorityDlRbPsStrLt64

Number of RAB assignments for medium priority users (Allocation/Retention Priority of 1) that are rejected by iRM. (DlRbPsStrLt64)

Data Source

RNC C-Node

Source Field

VS.IrmcacRejectedMediumPriority.DlRbPsStrLt64

Source Section

RncEquipment

IrmPreemptionRbHighPriorityDowngradedDlRbOther

Number of times RB with High Priority (gold) is downgraded after activation of iRM Preemption Feature. (DlRbOther)

Data Source

RNC C-Node

Source Field

VS.IrmPreemptionRbHighPriorityDowngraded.DlRbOther

Source Section

RncEquipment

IrmPreemptionRbHighPriorityDowngradedDlRbPsIB128

Number of times RB with High Priority (gold) is downgraded after activation of iRM Preemption Feature. (DlRbPsIB128)

Data Source

RNC C-Node

Source Field

VS.IrmPreemptionRbHighPriorityDowngraded.DlRbPsIB128

Source Section

RncEquipment

IrmPreemptionRbHighPriorityDowngradedDlRbPsIB16

Number of times RB with High Priority (gold) is downgraded after activation of iRM Preemption Feature. (DlRbPsIB16)

Data Source

RNC C-Node

Source Field

VS.IrmPreemptionRbHighPriorityDowngraded.DlRbPsIB16

Source Section

RncEquipment

IrmPreemptionRbHighPriorityDowngradedDlRbPsIB256

Number of times RB with High Priority (gold) is downgraded after activation of iRM Preemption Feature. (DlRbPsIB256)

Data Source

RNC C-Node

Source Field

VS.IrmPreemptionRbHighPriorityDowngraded.DlRbPsIB256

Source Section

RncEquipment

IrmPreemptionRbHighPriorityDowngradedDlRbPsIB32

Number of times RB with High Priority (gold) is downgraded after activation of iRM Preemption Feature. (DlRbPsIB32)

Data Source

RNC C-Node

Source Field

VS.IrmPreemptionRbHighPriorityDowngraded.DlRbPsIB32

Source Section

RncEquipment

IrmPreemptionRbHighPriorityDowngradedDlRbPsIB384

Number of times RB with High Priority (gold) is downgraded after activation of iRM Preemption Feature. (DlRbPsIB384)

Data Source

RNC C-Node

Source Field

VS.IrmPreemptionRbHighPriorityDowngraded.DlRbPsIB384

Source Section

RncEquipment

IrmPreemptionRbHighPriorityDowngradedDlRbPsIB64

Number of times RB with High Priority (gold) is downgraded after activation of iRM Preemption Feature. (DlRbPsIB64)

Data Source

RNC C-Node

Source Field

VS.IrmPreemptionRbHighPriorityDowngraded.DlRbPsIB64

Source Section

RncEquipment

IrmPreemptionRbHighPriorityDowngradedDlRbPsIB8

Number of times RB with High Priority (gold) is downgraded after activation of iRM Preemption Feature. (DlRbPsIB8)

Data Source

RNC C-Node

Source Field

VS.IrmPreemptionRbHighPriorityDowngraded.DlRbPsIB8

Source Section

RncEquipment

IrmPreemptionRbHighPriorityDowngradedDlRbPsStr128

Number of times RB with High Priority (gold) is downgraded after activation of iRM Preemption Feature. (DlRbPsStr128)

Data Source

RNC C-Node

Source Field

VS.IrmPreemptionRbHighPriorityDowngraded.DlRbPsStr128

Source Section

RncEquipment

IrmPreemptionRbHighPriorityDowngradedDlRbPsStr256

Number of times RB with High Priority (gold) is downgraded after activation of iRM Preemption Feature. (DlRbPsStr256)

Data Source

RNC C-Node

Source Field

VS.IrmPreemptionRbHighPriorityDowngraded.DlRbPsStr256

Source Section

RncEquipment

IrmPreemptionRbHighPriorityDowngradedDlRbPsStr384

Number of times RB with High Priority (gold) is downgraded after activation of iRM Preemption Feature. (DlRbPsStr384)

Data Source

RNC C-Node

Source Field

VS.IrmPreemptionRbHighPriorityDowngraded.DlRbPsStr384

Source Section

RncEquipment

IrmPreemptionRbHighPriorityDowngradedDlRbPsStr64

Number of times RB with High Priority (gold) is downgraded after activation of iRM Preemption Feature. (DlRbPsStr64)

Data Source

RNC C-Node

Source Field

VS.IrmPreemptionRbHighPriorityDowngraded.DlRbPsStr64

Source Section

RncEquipment

IrmPreemptionRbHighPriorityDowngradedDlRbPsStrLt64

Number of times RB with High Priority (gold) is downgraded after activation of iRM Preemption Feature. (DlRbPsStrLt64)

Data Source

RNC C-Node

Source Field

VS.IrmPreemptionRbHighPriorityDowngraded.DlRbPsStrLt64

Source Section

RncEquipment

IrmPreemptionRbHighPriorityRejectedDlRbOther

Number of times RB with High Priority (gold) is rejected after activation of iRM Preemption Feature. (DlRbOther)

Data Source

RNC C-Node

Source Field

VS.IrmPreemptionRbHighPriorityRejected.DlRbOther

Source Section

RncEquipment

IrmPreemptionRbHighPriorityRejectedDlRbPsIB128

Number of times RB with High Priority (gold) is rejected after activation of iRM Preemption Feature. (DlRbPsIB128)

Data Source

RNC C-Node

Source Field

VS.IrmPreemptionRbHighPriorityRejected.DlRbPsIB128

Source Section

RncEquipment

IrmPreemptionRbHighPriorityRejectedDlRbPsIB16

Number of times RB with High Priority (gold) is rejected after activation of iRM Preemption Feature. (DlRbPsIB16)

Data Source

RNC C-Node

Source Field

VS.IrmPreemptionRbHighPriorityRejected.DlRbPsIB16

Source Section

RncEquipment

IrmPreemptionRbHighPriorityRejectedDlRbPsIB256

Number of times RB with High Priority (gold) is rejected after activation of iRM Preemption Feature. (DlRbPsIB256)

Data Source

RNC C-Node

Source Field

VS.IrmPreemptionRbHighPriorityRejected.DlRbPsIB256

Source Section

RncEquipment

IrmPreemptionRbHighPriorityRejectedDlRbPsIB32

Number of times RB with High Priority (gold) is rejected after activation of iRM Preemption Feature. (DlRbPsIB32)

Data Source

RNC C-Node

Source Field

VS.IrmPreemptionRbHighPriorityRejected.DlRbPsIB32

Source Section

RncEquipment

IrmPreemptionRbHighPriorityRejectedDlRbPsIB384

Number of times RB with High Priority (gold) is rejected after activation of iRM Preemption Feature. (DlRbPsIB384)

Data Source

RNC C-Node

Source Field

VS.IrmPreemptionRbHighPriorityRejected.DlRbPsIB384

Source Section

RncEquipment

IrmPreemptionRbHighPriorityRejectedDlRbPsIB64

Number of times RB with High Priority (gold) is rejected after activation of iRM Preemption Feature. (DlRbPsIB64)

Data Source

RNC C-Node

Source Field

VS.IrmPreemptionRbHighPriorityRejected.DlRbPsIB64

Source Section

RncEquipment

IrmPreemptionRbHighPriorityRejectedDlRbPsIB8

Number of times RB with High Priority (gold) is rejected after activation of iRM Preemption Feature. (DlRbPsIB8)

Data Source

RNC C-Node

Source Field

VS.IrmPreemptionRbHighPriorityRejected.DlRbPsIB8

Source Section

RncEquipment

IrmPreemptionRbHighPriorityRejectedDlRbPsStr128

Number of times RB with High Priority (gold) is rejected after activation of iRM Preemption Feature. (DlRbPsStr128)

Data Source

RNC C-Node

Source Field

VS.IrmPreemptionRbHighPriorityRejected.DlRbPsStr128

Source Section

RncEquipment

IrmPreemptionRbHighPriorityRejectedDlRbPsStr256

Number of times RB with High Priority (gold) is rejected after activation of iRM Preemption Feature. (DlRbPsStr256)

Data Source

RNC C-Node

Source Field

VS.IrmPreemptionRbHighPriorityRejected.DlRbPsStr256

Source Section

RncEquipment

IrmPreemptionRbHighPriorityRejectedDlRbPsStr384

Number of times RB with High Priority (gold) is rejected after activation of iRM Preemption Feature. (DlRbPsStr384)

Data Source

RNC C-Node

Source Field

VS.IrmPreemptionRbHighPriorityRejected.DlRbPsStr384

Source Section

RncEquipment

IrmPreemptionRbHighPriorityRejectedDlRbPsStr64

Number of times RB with High Priority (gold) is rejected after activation of iRM Preemption Feature. (DlRbPsStr64)

Data Source

RNC C-Node

Source Field

VS.IrmPreemptionRbHighPriorityRejected.DlRbPsStr64

Source Section

RncEquipment

IrmPreemptionRbHighPriorityRejectedDlRbPsStrLt64

Number of times RB with High Priority (gold) is rejected after activation of iRM Preemption Feature. (DlRbPsStrLt64)

Data Source

RNC C-Node

Source Field

VS.IrmPreemptionRbHighPriorityRejected.DlRbPsStrLt64

Source Section

RncEquipment

IrmPreemptionRbLowPriorityDowngradedDlRbOther

Number of times RB with Low Priority (bronze) is downgraded after activation of iRM Preemption Feature. (DlRbOther)

Data Source

RNC C-Node

Source Field

VS.IrmPreemptionRbLowPriorityDowngraded.DlRbOther

Source Section

RncEquipment

IrmPreemptionRbLowPriorityDowngradedDlRbPsIB128

Number of times RB with Low Priority (bronze) is downgraded after activation of iRM Preemption Feature. (DlRbPsIB128)

Data Source

RNC C-Node

Source Field

VS.IrmPreemptionRbLowPriorityDowngraded.DlRbPsIB128

Source Section

RncEquipment

IrmPreemptionRbLowPriorityDowngradedDlRbPsIB16

Number of times RB with Low Priority (bronze) is downgraded after activation of iRM Preemption Feature. (DlRbPsIB16)

Data Source

RNC C-Node

Source Field

VS.IrmPreemptionRbLowPriorityDowngraded.DlRbPsIB16

Source Section

RncEquipment

IrmPreemptionRbLowPriorityDowngradedDlRbPsIB256

Number of times RB with Low Priority (bronze) is downgraded after activation of iRM Preemption Feature. (DlRbPsIB256)

Data Source

RNC C-Node

Source Field

VS.IrmPreemptionRbLowPriorityDowngraded.DlRbPsIB256

Source Section

RncEquipment

IrmPreemptionRbLowPriorityDowngradedDlRbPsIB32

Number of times RB with Low Priority (bronze) is downgraded after activation of iRM Preemption Feature. (DlRbPsIB32)

Data Source

RNC C-Node

Source Field

VS.IrmPreemptionRbLowPriorityDowngraded.DlRbPsIB32

Source Section

RncEquipment

IrmPreemptionRbLowPriorityDowngradedDlRbPsIB384

Number of times RB with Low Priority (bronze) is downgraded after activation of iRM Preemption Feature. (DlRbPsIB384)

Data Source

RNC C-Node

Source Field

VS.IrmPreemptionRbLowPriorityDowngraded.DlRbPsIB384

Source Section

RncEquipment

IrmPreemptionRbLowPriorityDowngradedDlRbPsIB64

Number of times RB with Low Priority (bronze) is downgraded after activation of iRM Preemption Feature. (DlRbPsIB64)

Data Source

RNC C-Node

Source Field

VS.IrmPreemptionRbLowPriorityDowngraded.DlRbPsIB64

Source Section

RncEquipment

IrmPreemptionRbLowPriorityDowngradedDlRbPsIB8

Number of times RB with Low Priority (bronze) is downgraded after activation of iRM Preemption Feature. (DlRbPsIB8)

Data Source

RNC C-Node

Source Field

VS.IrmPreemptionRbLowPriorityDowngraded.DlRbPsIB8

Source Section

RncEquipment

IrmPreemptionRbLowPriorityDowngradedDlRbPsStr128

Number of times RB with Low Priority (bronze) is downgraded after activation of iRM Preemption Feature. (DlRbPsStr128)

Data Source

RNC C-Node

Source Field

VS.IrmPreemptionRbLowPriorityDowngraded.DlRbPsStr128

Source Section

RncEquipment

IrmPreemptionRbLowPriorityDowngradedDlRbPsStr256

Number of times RB with Low Priority (bronze) is downgraded after activation of iRM Preemption Feature. (DlRbPsStr256)

Data Source

RNC C-Node

Source Field

VS.IrmPreemptionRbLowPriorityDowngraded.DlRbPsStr256

Source Section

RncEquipment

IrmPreemptionRbLowPriorityDowngradedDlRbPsStr384

Number of times RB with Low Priority (bronze) is downgraded after activation of iRM Preemption Feature. (DlRbPsStr384)

Data Source

RNC C-Node

Source Field

VS.IrmPreemptionRbLowPriorityDowngraded.DlRbPsStr384

Source Section

RncEquipment

IrmPreemptionRbLowPriorityDowngradedDlRbPsStr64

Number of times RB with Low Priority (bronze) is downgraded after activation of iRM Preemption Feature. (DlRbPsStr64)

Data Source

RNC C-Node

Source Field

VS.IrmPreemptionRbLowPriorityDowngraded.DlRbPsStr64

Source Section

RncEquipment

IrmPreemptionRbLowPriorityDowngradedDlRbPsStrLt64

Number of times RB with Low Priority (bronze) is downgraded after activation of iRM Preemption Feature. (DlRbPsStrLt64)

Data Source

RNC C-Node

Source Field

VS.IrmPreemptionRbLowPriorityDowngraded.DlRbPsStrLt64

Source Section

RncEquipment

IrmPreemptionRbLowPriorityRejectedDlRbOther

Number of times RB with Low Priority (bronze) is rejected after activation of iRM Preemption Feature. (DlRbOther)

Data Source

RNC C-Node

Source Field

VS.IrmPreemptionRbLowPriorityRejected.DlRbOther

Source Section

RncEquipment

IrmPreemptionRbLowPriorityRejectedDlRbPsIB128

Number of times RB with Low Priority (bronze) is rejected after activation of iRM Preemption Feature. (DlRbPsIB128)

Data Source

RNC C-Node

Source Field

VS.IrmPreemptionRbLowPriorityRejected.DlRbPsIB128

Source Section

RncEquipment

IrmPreemptionRbLowPriorityRejectedDlRbPsIB16

Number of times RB with Low Priority (bronze) is rejected after activation of iRM Preemption Feature. (DlRbPsIB16)

Data Source

RNC C-Node

Source Field

VS.IrmPreemptionRbLowPriorityRejected.DlRbPsIB16

Source Section

RncEquipment

IrmPreemptionRbLowPriorityRejectedDlRbPsIB256

Number of times RB with Low Priority (bronze) is rejected after activation of iRM Preemption Feature. (DlRbPsIB256)

Data Source

RNC C-Node

Source Field

VS.IrmPreemptionRbLowPriorityRejected.DlRbPsIB256

Source Section

RncEquipment

IrmPreemptionRbLowPriorityRejectedDlRbPsIB32

Number of times RB with Low Priority (bronze) is rejected after activation of iRM Preemption Feature. (DlRbPsIB32)

Data Source

RNC C-Node

Source Field

VS.IrmPreemptionRbLowPriorityRejected.DlRbPsIB32

Source Section

RncEquipment

IrmPreemptionRbLowPriorityRejectedDlRbPsIB384

Number of times RB with Low Priority (bronze) is rejected after activation of iRM Preemption Feature. (DlRbPsIB384)

Data Source

RNC C-Node

Source Field

VS.IrmPreemptionRbLowPriorityRejected.DlRbPsIB384

Source Section

RncEquipment

IrmPreemptionRbLowPriorityRejectedDlRbPsIB64

Number of times RB with Low Priority (bronze) is rejected after activation of iRM Preemption Feature. (DlRbPsIB64)

Data Source

RNC C-Node

Source Field

VS.IrmPreemptionRbLowPriorityRejected.DlRbPsIB64

Source Section

RncEquipment

IrmPreemptionRbLowPriorityRejectedDlRbPsIB8

Number of times RB with Low Priority (bronze) is rejected after activation of iRM Preemption Feature. (DlRbPsIB8)

Data Source

RNC C-Node

Source Field

VS.IrmPreemptionRbLowPriorityRejected.DlRbPsIB8

Source Section

RncEquipment

IrmPreemptionRbLowPriorityRejectedDlRbPsStr128

Number of times RB with Low Priority (bronze) is rejected after activation of iRM Preemption Feature. (DlRbPsStr128)

Data Source

RNC C-Node

Source Field

VS.IrmPreemptionRbLowPriorityRejected.DlRbPsStr128

Source Section

RncEquipment

IrmPreemptionRbLowPriorityRejectedDlRbPsStr256

Number of times RB with Low Priority (bronze) is rejected after activation of iRM Preemption Feature. (DlRbPsStr256)

Data Source

RNC C-Node

Source Field

VS.IrmPreemptionRbLowPriorityRejected.DlRbPsStr256

Source Section

RncEquipment

IrmPreemptionRbLowPriorityRejectedDlRbPsStr384

Number of times RB with Low Priority (bronze) is rejected after activation of iRM Preemption Feature. (DlRbPsStr384)

Data Source

RNC C-Node

Source Field

VS.IrmPreemptionRbLowPriorityRejected.DlRbPsStr384

Source Section

RncEquipment

IrmPreemptionRbLowPriorityRejectedDlRbPsStr64

Number of times RB with Low Priority (bronze) is rejected after activation of iRM Preemption Feature. (DlRbPsStr64)

Data Source

RNC C-Node

Source Field

VS.IrmPreemptionRbLowPriorityRejected.DlRbPsStr64

Source Section

RncEquipment

IrmPreemptionRbLowPriorityRejectedDlRbPsStrLt64

Number of times RB with Low Priority (bronze) is rejected after activation of iRM Preemption Feature. (DlRbPsStrLt64)

Data Source

RNC C-Node

Source Field

VS.IrmPreemptionRbLowPriorityRejected.DlRbPsStrLt64

Source Section

RncEquipment

IrmPreemptionRbMediumPriorityDowngradedDlRbOther

Number of times RB with Medium Priority (silver) is downgraded after activation of iRM Preemption Feature. (DlRbOther)

Data Source

RNC C-Node

Source Field

VS.IrmPreemptionRbMediumPriorityDowngraded.DlRbOther

Source Section

RncEquipment

IrmPreemptionRbMediumPriorityDowngradedDlRbPsIB128

Number of times RB with Medium Priority (silver) is downgraded after activation of iRM Preemption Feature. (DlRbPsIB128)

Data Source

RNC C-Node

Source Field

VS.IrmPreemptionRbMediumPriorityDowngraded.DlRbPsIB128

Source Section

RncEquipment

IrmPreemptionRbMediumPriorityDowngradedDlRbPsIB16

Number of times RB with Medium Priority (silver) is downgraded after activation of iRM Preemption Feature. (DlRbPsIB16)

Data Source

RNC C-Node

Source Field

VS.IrmPreemptionRbMediumPriorityDowngraded.DlRbPsIB16

Source Section

RncEquipment

IrmPreemptionRbMediumPriorityDowngradedDlRbPsIB256

Number of times RB with Medium Priority (silver) is downgraded after activation of iRM Preemption Feature. (DlRbPsIB256)

Data Source

RNC C-Node

Source Field

VS.IrmPreemptionRbMediumPriorityDowngraded.DlRbPsIB256

Source Section

RncEquipment

IrmPreemptionRbMediumPriorityDowngradedDlRbPsIB32

Number of times RB with Medium Priority (silver) is downgraded after activation of iRM Preemption Feature. (DlRbPsIB32)

Data Source

RNC C-Node

Source Field

VS.IrmPreemptionRbMediumPriorityDowngraded.DlRbPsIB32

Source Section

RncEquipment

IrmPreemptionRbMediumPriorityDowngradedDlRbPsIB384

Number of times RB with Medium Priority (silver) is downgraded after activation of iRM Preemption Feature. (DlRbPsIB384)

Data Source

RNC C-Node

Source Field

VS.IrmPreemptionRbMediumPriorityDowngraded.DlRbPsIB384

Source Section

RncEquipment

IrmPreemptionRbMediumPriorityDowngradedDlRbPsIB64

Number of times RB with Medium Priority (silver) is downgraded after activation of iRM Preemption Feature. (DlRbPsIB64)

Data Source

RNC C-Node

Source Field

VS.IrmPreemptionRbMediumPriorityDowngraded.DlRbPsIB64

Source Section

RncEquipment

IrmPreemptionRbMediumPriorityDowngradedDlRbPsIB8

Number of times RB with Medium Priority (silver) is downgraded after activation of iRM Preemption Feature. (DlRbPsIB8)

Data Source

RNC C-Node

Source Field

VS.IrmPreemptionRbMediumPriorityDowngraded.DlRbPsIB8

Source Section

RncEquipment

IrmPreemptionRbMediumPriorityDowngradedDlRbPsStr128

Number of times RB with Medium Priority (silver) is downgraded after activation of iRM Preemption Feature. (DlRbPsStr128)

Data Source

RNC C-Node

Source Field

VS.IrmPreemptionRbMediumPriorityDowngraded.DlRbPsStr128

Source Section

RncEquipment

IrmPreemptionRbMediumPriorityDowngradedDlRbPsStr256

Number of times RB with Medium Priority (silver) is downgraded after activation of iRM Preemption Feature. (DlRbPsStr256)

Data Source

RNC C-Node

Source Field

VS.IrmPreemptionRbMediumPriorityDowngraded.DlRbPsStr256

Source Section

RncEquipment

IrmPreemptionRbMediumPriorityDowngradedDlRbPsStr384

Number of times RB with Medium Priority (silver) is downgraded after activation of iRM Preemption Feature. (DlRbPsStr384)

Data Source

RNC C-Node

Source Field

VS.IrmPreemptionRbMediumPriorityDowngraded.DlRbPsStr384

Source Section

RncEquipment

IrmPreemptionRbMediumPriorityDowngradedDlRbPsStr64

Number of times RB with Medium Priority (silver) is downgraded after activation of iRM Preemption Feature. (DlRbPsStr64)

Data Source

RNC C-Node

Source Field

VS.IrmPreemptionRbMediumPriorityDowngraded.DlRbPsStr64

Source Section

RncEquipment

IrmPreemptionRbMediumPriorityDowngradedDlRbPsStrLt64

Number of times RB with Medium Priority (silver) is downgraded after activation of iRM Preemption Feature. (DlRbPsStrLt64)

Data Source

RNC C-Node

Source Field

VS.IrmPreemptionRbMediumPriorityDowngraded.DlRbPsStrLt64

Source Section

RncEquipment

IrmPreemptionRbMediumPriorityRejectedDlRbOther

Number of times RB with Medium Priority (silver) is rejected after activation of iRM Preemption Feature. (DlRbOther)

Data Source

RNC C-Node

Source Field

VS.IrmPreemptionRbMediumPriorityRejected.DlRbOther

Source Section

RncEquipment

IrmPreemptionRbMediumPriorityRejectedDlRbPsIB128

Number of times RB with Medium Priority (silver) is rejected after activation of iRM Preemption Feature. (DlRbPsIB128)

Data Source

RNC C-Node

Source Field

VS.IrmPreemptionRbMediumPriorityRejected.DlRbPsIB128

Source Section

RncEquipment

IrmPreemptionRbMediumPriorityRejectedDlRbPsIB16

Number of times RB with Medium Priority (silver) is rejected after activation of iRM Preemption Feature. (DlRbPsIB16)

Data Source

RNC C-Node

Source Field

VS.IrmPreemptionRbMediumPriorityRejected.DlRbPsIB16

Source Section

RncEquipment

IrmPreemptionRbMediumPriorityRejectedDlRbPsIB256

Number of times RB with Medium Priority (silver) is rejected after activation of iRM Preemption Feature. (DlRbPsIB256)

Data Source

RNC C-Node

Source Field

VS.IrmPreemptionRbMediumPriorityRejected.DlRbPsIB256

Source Section

RncEquipment

IrmPreemptionRbMediumPriorityRejectedDlRbPsIB32

Number of times RB with Medium Priority (silver) is rejected after activation of iRM Preemption Feature. (DlRbPsIB32)

Data Source

RNC C-Node

Source Field

VS.IrmPreemptionRbMediumPriorityRejected.DlRbPsIB32

Source Section

RncEquipment

IrmPreemptionRbMediumPriorityRejectedDlRbPsIB384

Number of times RB with Medium Priority (silver) is rejected after activation of iRM Preemption Feature. (DlRbPsIB384)

Data Source

RNC C-Node

Source Field

VS.IrmPreemptionRbMediumPriorityRejected.DlRbPsIB384

Source Section

RncEquipment

IrmPreemptionRbMediumPriorityRejectedDlRbPsIB64

Number of times RB with Medium Priority (silver) is rejected after activation of iRM Preemption Feature. (DlRbPsIB64)

Data Source

RNC C-Node

Source Field

VS.IrmPreemptionRbMediumPriorityRejected.DlRbPsIB64

Source Section

RncEquipment

IrmPreemptionRbMediumPriorityRejectedDlRbPsIB8

Number of times RB with Medium Priority (silver) is rejected after activation of iRM Preemption Feature. (DlRbPsIB8)

Data Source

RNC C-Node

Source Field

VS.IrmPreemptionRbMediumPriorityRejected.DlRbPsIB8

Source Section

RncEquipment

IrmPreemptionRbMediumPriorityRejectedDlRbPsStr128

Number of times RB with Medium Priority (silver) is rejected after activation of iRM Preemption Feature. (DlRbPsStr128)

Data Source

RNC C-Node

Source Field

VS.IrmPreemptionRbMediumPriorityRejected.DlRbPsStr128

Source Section

RncEquipment

IrmPreemptionRbMediumPriorityRejectedDlRbPsStr256

Number of times RB with Medium Priority (silver) is rejected after activation of iRM Preemption Feature. (DlRbPsStr256)

Data Source

RNC C-Node

Source Field

VS.IrmPreemptionRbMediumPriorityRejected.DlRbPsStr256

Source Section

RncEquipment

IrmPreemptionRbMediumPriorityRejectedDlRbPsStr384

Number of times RB with Medium Priority (silver) is rejected after activation of iRM Preemption Feature. (DlRbPsStr384)

Data Source

RNC C-Node

Source Field

VS.IrmPreemptionRbMediumPriorityRejected.DlRbPsStr384

Source Section

RncEquipment

IrmPreemptionRbMediumPriorityRejectedDlRbPsStr64

Number of times RB with Medium Priority (silver) is rejected after activation of iRM Preemption Feature. (DlRbPsStr64)

Data Source

RNC C-Node

Source Field

VS.IrmPreemptionRbMediumPriorityRejected.DlRbPsStr64

Source Section

RncEquipment

IrmPreemptionRbMediumPriorityRejectedDlRbPsStrLt64

Number of times RB with Medium Priority (silver) is rejected after activation of iRM Preemption Feature. (DlRbPsStrLt64)

Data Source

RNC C-Node

Source Field

VS.IrmPreemptionRbMediumPriorityRejected.DlRbPsStrLt64

Source Section

RncEquipment

IrmUpgradingActivation

Number of upgrading activations (IrmUpgradingActivation)

Data Source

RNC C-Node

Source Field

VS.IrmUpgradingActivation

Source Section

RncEquipment

IrmUpgradingActivationDelayed

Number of delayed activation due to the ping pong timer (IrmUpgradingActivationDelayed)

Data Source

RNC C-Node

Source Field

VS.IrmUpgradingActivationDelayed

Source Section

RncEquipment

IrmUpgradingDeactivation

Number of upgrading deactivations (IrmUpgradingDeactivation)

Data Source

RNC C-Node

Source Field

VS.IrmUpgradingDeactivation

Source Section

RncEquipment

IU_PS_DataRate_PSDL

Data Rate for PS Downlink User Bits on Iu-ps in kbps

Data Source

RNC

Source Field

VS.IU-PS.DataRate.PSDL

Source Section

Downlink Data Rates / User Bits

IU_PS_DataRate_PSDL_Discard

Data Rate for Discarded PS Downlink User Bits on Iu-ps in kbps

Data Source

RNC

Source Field

VS.IU-PS.DataRate.PSDL.Discard

Source Section

Downlink Data Rates / User Bits

IuAvgNbrSccpCnxCsRdnId0Avg

Average number of sccp connections on Iu CS interface (RdnId0Avg)

Data Source

RNC C-Node

Source Field

VS.IuAvgNbrSccpCnxCs.RdnId0.Avg

Source Section

RncEquipment

IuAvgNbrSccpCnxCsRdnId0Cum

Average number of sccp connections on Iu CS interface (RdnId0Cum)

Data Source

RNC C-Node

Source Field

VS.IuAvgNbrSccpCnxCs.RdnId0.Cum

Source Section

RncEquipment

IuAvgNbrSccpCnxCsRdnId0Max

Average number of sccp connections on Iu CS interface (RdnId0Max)

Data Source

RNC C-Node

Source Field

VS.IuAvgNbrSccpCnxCs.RdnId0.Max

Source Section

RncEquipment

IuAvgNbrSccpCnxCsRdnId0Min

Average number of sccp connections on Iu CS interface (RdnId0Min)

Data Source

RNC C-Node

Source Field

VS.IuAvgNbrSccpCnxCs.RdnId0.Min

Source Section

RncEquipment

IuAvgNbrSccpCnxCsRdnId0NbEvt

Average number of sccp connections on Iu CS interface (RdnId0NbEvt)

Data Source

RNC C-Node

Source Field

VS.IuAvgNbrSccpCnxCs.RdnId0.NbEvt

Source Section

RncEquipment

IuAvgNbrSccpCnxCsRdnId10Avg

Average number of sccp connections on Iu CS interface (RdnId10Avg)

Data Source

RNC C-Node

Source Field

VS.IuAvgNbrSccpCnxCs.RdnId10.Avg

Source Section

RncEquipment

IuAvgNbrSccpCnxCsRdnId10Cum

Average number of sccp connections on Iu CS interface (RdnId10Cum)

Data Source

RNC C-Node

Source Field

VS.IuAvgNbrSccpCnxCs.RdnId10.Cum

Source Section

RncEquipment

IuAvgNbrSccpCnxCsRdnId10Max

Average number of sccp connections on Iu CS interface (RdnId10Max)

Data Source

RNC C-Node

Source Field

VS.IuAvgNbrSccpCnxCs.RdnId10.Max

Source Section

RncEquipment

IuAvgNbrSccpCnxCsRdnId10Min

Average number of sccp connections on Iu CS interface (RdnId10Min)

Data Source

RNC C-Node

Source Field

VS.IuAvgNbrSccpCnxCs.RdnId10.Min

Source Section

RncEquipment

IuAvgNbrSccpCnxCsRdnId10NbEvt

Average number of sccp connections on Iu CS interface (RdnId10NbEvt)

Data Source

RNC C-Node

Source Field

VS.IuAvgNbrSccpCnxCs.RdnId10.NbEvt

Source Section

RncEquipment

IuAvgNbrSccpCnxCsRdnId11Avg

Average number of sccp connections on Iu CS interface (RdnId11Avg)

Data Source

RNC C-Node

Source Field

VS.IuAvgNbrSccpCnxCs.RdnId11.Avg

Source Section

RncEquipment

IuAvgNbrSccpCnxCsRdnId11Cum

Average number of sccp connections on Iu CS interface (RdnId11Cum)

Data Source

RNC C-Node

Source Field

VS.IuAvgNbrSccpCnxCs.RdnId11.Cum

Source Section

RncEquipment

IuAvgNbrSccpCnxCsRdnId11Max

Average number of sccp connections on Iu CS interface (RdnId11Max)

Data Source

RNC C-Node

Source Field

VS.IuAvgNbrSccpCnxCs.RdnId11.Max

Source Section

RncEquipment

IuAvgNbrSccpCnxCsRdnId11Min

Average number of sccp connections on Iu CS interface (RdnId11Min)

Data Source

RNC C-Node

Source Field

VS.IuAvgNbrSccpCnxCs.RdnId11.Min

Source Section

RncEquipment

IuAvgNbrSccpCnxCsRdnId11NbEvt

Average number of sccp connections on Iu CS interface (RdnId11NbEvt)

Data Source

RNC C-Node

Source Field

VS.IuAvgNbrSccpCnxCs.RdnId11.NbEvt

Source Section

RncEquipment

IuAvgNbrSccpCnxCsRdnId12Avg

Average number of sccp connections on Iu CS interface (RdnId12Avg)

Data Source

RNC C-Node

Source Field

VS.IuAvgNbrSccpCnxCs.RdnId12.Avg

Source Section

RncEquipment

IuAvgNbrSccpCnxCsRdnId12Cum

Average number of sccp connections on Iu CS interface (RdnId12Cum)

Data Source

RNC C-Node

Source Field

VS.IuAvgNbrSccpCnxCs.RdnId12.Cum

Source Section

RncEquipment

IuAvgNbrSccpCnxCsRdnId12Max

Average number of sccp connections on Iu CS interface (RdnId12Max)

Data Source

RNC C-Node

Source Field

VS.IuAvgNbrSccpCnxCs.RdnId12.Max

Source Section

RncEquipment

IuAvgNbrSccpCnxCsRdnId12Min

Average number of sccp connections on Iu CS interface (RdnId12Min)

Data Source

RNC C-Node

Source Field

VS.IuAvgNbrSccpCnxCs.RdnId12.Min

Source Section

RncEquipment

IuAvgNbrSccpCnxCsRdnId12NbEvt

Average number of sccp connections on Iu CS interface (RdnId12NbEvt)

Data Source

RNC C-Node

Source Field

VS.IuAvgNbrSccpCnxCs.RdnId12.NbEvt

Source Section

RncEquipment

IuAvgNbrSccpCnxCsRdnId13Avg

Average number of sccp connections on Iu CS interface (RdnId13Avg)

Data Source

RNC C-Node

Source Field

VS.IuAvgNbrSccpCnxCs.RdnId13.Avg

Source Section

RncEquipment

IuAvgNbrSccpCnxCsRdnId13Cum

Average number of sccp connections on Iu CS interface (RdnId13Cum)

Data Source

RNC C-Node

Source Field

VS.IuAvgNbrSccpCnxCs.RdnId13.Cum

Source Section

RncEquipment

IuAvgNbrSccpCnxCsRdnId13Max

Average number of sccp connections on Iu CS interface (RdnId13Max)

Data Source

RNC C-Node

Source Field

VS.IuAvgNbrSccpCnxCs.RdnId13.Max

Source Section

RncEquipment

IuAvgNbrSccpCnxCsRdnId13Min

Average number of sccp connections on Iu CS interface (RdnId13Min)

Data Source

RNC C-Node

Source Field

VS.IuAvgNbrSccpCnxCs.RdnId13.Min

Source Section

RncEquipment

IuAvgNbrSccpCnxCsRdnId13NbEvt

Average number of sccp connections on Iu CS interface (RdnId13NbEvt)

Data Source

RNC C-Node

Source Field

VS.IuAvgNbrSccpCnxCs.RdnId13.NbEvt

Source Section

RncEquipment

IuAvgNbrSccpCnxCsRdnId14Avg

Average number of sccp connections on Iu CS interface (RdnId14Avg)

Data Source

RNC C-Node

Source Field

VS.IuAvgNbrSccpCnxCs.RdnId14.Avg

Source Section

RncEquipment

IuAvgNbrSccpCnxCsRdnId14Cum

Average number of sccp connections on Iu CS interface (RdnId14Cum)

Data Source

RNC C-Node

Source Field

VS.IuAvgNbrSccpCnxCs.RdnId14.Cum

Source Section

RncEquipment

IuAvgNbrSccpCnxCsRdnId14Max

Average number of sccp connections on Iu CS interface (RdnId14Max)

Data Source

RNC C-Node

Source Field

VS.IuAvgNbrSccpCnxCs.RdnId14.Max

Source Section

RncEquipment

IuAvgNbrSccpCnxCsRdnId14Min

Average number of sccp connections on Iu CS interface (RdnId14Min)

Data Source

RNC C-Node

Source Field

VS.IuAvgNbrSccpCnxCs.RdnId14.Min

Source Section

RncEquipment

IuAvgNbrSccpCnxCsRdnId14NbEvt

Average number of sccp connections on Iu CS interface (RdnId14NbEvt)

Data Source

RNC C-Node

Source Field

VS.IuAvgNbrSccpCnxCs.RdnId14.NbEvt

Source Section

RncEquipment

IuAvgNbrSccpCnxCsRdnId15Avg

Average number of sccp connections on Iu CS interface (RdnId15Avg)

Data Source

RNC C-Node

Source Field

VS.IuAvgNbrSccpCnxCs.RdnId15.Avg

Source Section

RncEquipment

IuAvgNbrSccpCnxCsRdnId15Cum

Average number of sccp connections on Iu CS interface (RdnId15Cum)

Data Source

RNC C-Node

Source Field

VS.IuAvgNbrSccpCnxCs.RdnId15.Cum

Source Section

RncEquipment

IuAvgNbrSccpCnxCsRdnId15Max

Average number of sccp connections on Iu CS interface (RdnId15Max)

Data Source

RNC C-Node

Source Field

VS.IuAvgNbrSccpCnxCs.RdnId15.Max

Source Section

RncEquipment

IuAvgNbrSccpCnxCsRdnId15Min

Average number of sccp connections on Iu CS interface (RdnId15Min)

Data Source

RNC C-Node

Source Field

VS.IuAvgNbrSccpCnxCs.RdnId15.Min

Source Section

RncEquipment

IuAvgNbrSccpCnxCsRdnId15NbEvt

Average number of sccp connections on Iu CS interface (RdnId15NbEvt)

Data Source

RNC C-Node

Source Field

VS.IuAvgNbrSccpCnxCs.RdnId15.NbEvt

Source Section

RncEquipment

IuAvgNbrSccpCnxCsRdnId16Avg

Average number of sccp connections on Iu CS interface (RdnId16Avg)

Data Source

RNC C-Node

Source Field

VS.IuAvgNbrSccpCnxCs.RdnId16.Avg

Source Section

RncEquipment

IuAvgNbrSccpCnxCsRdnId16Cum

Average number of sccp connections on Iu CS interface (RdnId16Cum)

Data Source

RNC C-Node

Source Field

VS.IuAvgNbrSccpCnxCs.RdnId16.Cum

Source Section

RncEquipment

IuAvgNbrSccpCnxCsRdnId16Max

Average number of sccp connections on Iu CS interface (RdnId16Max)

Data Source

RNC C-Node

Source Field

VS.IuAvgNbrSccpCnxCs.RdnId16.Max

Source Section

RncEquipment

IuAvgNbrSccpCnxCsRdnId16Min

Average number of sccp connections on Iu CS interface (RdnId16Min)

Data Source

RNC C-Node

Source Field

VS.IuAvgNbrSccpCnxCs.RdnId16.Min

Source Section

RncEquipment

IuAvgNbrSccpCnxCsRdnId16NbEvt

Average number of sccp connections on Iu CS interface (RdnId16NbEvt)

Data Source

RNC C-Node

Source Field

VS.IuAvgNbrSccpCnxCs.RdnId16.NbEvt

Source Section

RncEquipment

IuAvgNbrSccpCnxCsRdnId17Avg

Average number of sccp connections on Iu CS interface (RdnId17Avg)

Data Source

RNC C-Node

Source Field

VS.IuAvgNbrSccpCnxCs.RdnId17.Avg

Source Section

RncEquipment

IuAvgNbrSccpCnxCsRdnId17Cum

Average number of sccp connections on Iu CS interface (RdnId17Cum)

Data Source

RNC C-Node

Source Field

VS.IuAvgNbrSccpCnxCs.RdnId17.Cum

Source Section

RncEquipment

IuAvgNbrSccpCnxCsRdnId17Max

Average number of sccp connections on Iu CS interface (RdnId17Max)

Data Source

RNC C-Node

Source Field

VS.IuAvgNbrSccpCnxCs.RdnId17.Max

Source Section

RncEquipment

IuAvgNbrSccpCnxCsRdnId17Min

Average number of sccp connections on Iu CS interface (RdnId17Min)

Data Source

RNC C-Node

Source Field

VS.IuAvgNbrSccpCnxCs.RdnId17.Min

Source Section

RncEquipment

IuAvgNbrSccpCnxCsRdnId17NbEvt

Average number of sccp connections on Iu CS interface (RdnId17NbEvt)

Data Source

RNC C-Node

Source Field

VS.IuAvgNbrSccpCnxCs.RdnId17.NbEvt

Source Section

RncEquipment

IuAvgNbrSccpCnxCsRdnId18Avg

Average number of sccp connections on Iu CS interface (RdnId18Avg)

Data Source

RNC C-Node

Source Field

VS.IuAvgNbrSccpCnxCs.RdnId18.Avg

Source Section

RncEquipment

IuAvgNbrSccpCnxCsRdnId18Cum

Average number of sccp connections on Iu CS interface (RdnId18Cum)

Data Source

RNC C-Node

Source Field

VS.IuAvgNbrSccpCnxCs.RdnId18.Cum

Source Section

RncEquipment

IuAvgNbrSccpCnxCsRdnId18Max

Average number of sccp connections on Iu CS interface (RdnId18Max)

Data Source

RNC C-Node

Source Field

VS.IuAvgNbrSccpCnxCs.RdnId18.Max

Source Section

RncEquipment

IuAvgNbrSccpCnxCsRdnId18Min

Average number of sccp connections on Iu CS interface (RdnId18Min)

Data Source

RNC C-Node

Source Field

VS.IuAvgNbrSccpCnxCs.RdnId18.Min

Source Section

RncEquipment

IuAvgNbrSccpCnxCsRdnId18NbEvt

Average number of sccp connections on Iu CS interface (RdnId18NbEvt)

Data Source

RNC C-Node

Source Field

VS.IuAvgNbrSccpCnxCs.RdnId18.NbEvt

Source Section

RncEquipment

IuAvgNbrSccpCnxCsRdnId19Avg

Average number of sccp connections on Iu CS interface (RdnId19Avg)

Data Source

RNC C-Node

Source Field

VS.IuAvgNbrSccpCnxCs.RdnId19.Avg

Source Section

RncEquipment

IuAvgNbrSccpCnxCsRdnId19Cum

Average number of sccp connections on Iu CS interface (RdnId19Cum)

Data Source

RNC C-Node

Source Field

VS.IuAvgNbrSccpCnxCs.RdnId19.Cum

Source Section

RncEquipment

IuAvgNbrSccpCnxCsRdnId19Max

Average number of sccp connections on Iu CS interface (RdnId19Max)

Data Source

RNC C-Node

Source Field

VS.IuAvgNbrSccpCnxCs.RdnId19.Max

Source Section

RncEquipment

IuAvgNbrSccpCnxCsRdnId19Min

Average number of sccp connections on Iu CS interface (RdnId19Min)

Data Source

RNC C-Node

Source Field

VS.IuAvgNbrSccpCnxCs.RdnId19.Min

Source Section

RncEquipment

IuAvgNbrSccpCnxCsRdnId19NbEvt

Average number of sccp connections on Iu CS interface (RdnId19NbEvt)

Data Source

RNC C-Node

Source Field

VS.IuAvgNbrSccpCnxCs.RdnId19.NbEvt

Source Section

RncEquipment

IuAvgNbrSccpCnxCsRdnId1Avg

Average number of sccp connections on Iu CS interface (RdnId1Avg)

Data Source

RNC C-Node

Source Field

VS.IuAvgNbrSccpCnxCs.RdnId1.Avg

Source Section

RncEquipment

IuAvgNbrSccpCnxCsRdnId1Cum

Average number of sccp connections on Iu CS interface (RdnId1Cum)

Data Source

RNC C-Node

Source Field

VS.IuAvgNbrSccpCnxCs.RdnId1.Cum

Source Section

RncEquipment

IuAvgNbrSccpCnxCsRdnId1Max

Average number of sccp connections on Iu CS interface (RdnId1Max)

Data Source

RNC C-Node

Source Field

VS.IuAvgNbrSccpCnxCs.RdnId1.Max

Source Section

RncEquipment

IuAvgNbrSccpCnxCsRdnId1Min

Average number of sccp connections on Iu CS interface (RdnId1Min)

Data Source

RNC C-Node

Source Field

VS.IuAvgNbrSccpCnxCs.RdnId1.Min

Source Section

RncEquipment

IuAvgNbrSccpCnxCsRdnId1NbEvt

Average number of sccp connections on Iu CS interface (RdnId1NbEvt)

Data Source

RNC C-Node

Source Field

VS.IuAvgNbrSccpCnxCs.RdnId1.NbEvt

Source Section

RncEquipment

IuAvgNbrSccpCnxCsRdnId20Avg

Average number of sccp connections on Iu CS interface (RdnId20Avg)

Data Source

RNC C-Node

Source Field

VS.IuAvgNbrSccpCnxCs.RdnId20.Avg

Source Section

RncEquipment

IuAvgNbrSccpCnxCsRdnId20Cum

Average number of sccp connections on Iu CS interface (RdnId20Cum)

Data Source

RNC C-Node

Source Field

VS.IuAvgNbrSccpCnxCs.RdnId20.Cum

Source Section

RncEquipment

IuAvgNbrSccpCnxCsRdnId20Max

Average number of sccp connections on Iu CS interface (RdnId20Max)

Data Source

RNC C-Node

Source Field

VS.IuAvgNbrSccpCnxCs.RdnId20.Max

Source Section

RncEquipment

IuAvgNbrSccpCnxCsRdnId20Min

Average number of sccp connections on Iu CS interface (RdnId20Min)

Data Source

RNC C-Node

Source Field

VS.IuAvgNbrSccpCnxCs.RdnId20.Min

Source Section

RncEquipment

IuAvgNbrSccpCnxCsRdnId20NbEvt

Average number of sccp connections on Iu CS interface (RdnId20NbEvt)

Data Source

RNC C-Node

Source Field

VS.IuAvgNbrSccpCnxCs.RdnId20.NbEvt

Source Section

RncEquipment

IuAvgNbrSccpCnxCsRdnId21Avg

Average number of sccp connections on Iu CS interface (RdnId21Avg)

Data Source

RNC C-Node

Source Field

VS.IuAvgNbrSccpCnxCs.RdnId21.Avg

Source Section

RncEquipment

IuAvgNbrSccpCnxCsRdnId21Cum

Average number of sccp connections on Iu CS interface (RdnId21Cum)

Data Source

RNC C-Node

Source Field

VS.IuAvgNbrSccpCnxCs.RdnId21.Cum

Source Section

RncEquipment

IuAvgNbrSccpCnxCsRdnId21Max

Average number of sccp connections on Iu CS interface (RdnId21Max)

Data Source

RNC C-Node

Source Field

VS.IuAvgNbrSccpCnxCs.RdnId21.Max

Source Section

RncEquipment

IuAvgNbrSccpCnxCsRdnId21Min

Average number of sccp connections on Iu CS interface (RdnId21Min)

Data Source

RNC C-Node

Source Field

VS.IuAvgNbrSccpCnxCs.RdnId21.Min

Source Section

RncEquipment

IuAvgNbrSccpCnxCsRdnId21NbEvt

Average number of sccp connections on Iu CS interface (RdnId21NbEvt)

Data Source

RNC C-Node

Source Field

VS.IuAvgNbrSccpCnxCs.RdnId21.NbEvt

Source Section

RncEquipment

IuAvgNbrSccpCnxCsRdnId22Avg

Average number of sccp connections on Iu CS interface (RdnId22Avg)

Data Source

RNC C-Node

Source Field

VS.IuAvgNbrSccpCnxCs.RdnId22.Avg

Source Section

RncEquipment

IuAvgNbrSccpCnxCsRdnId22Cum

Average number of sccp connections on Iu CS interface (RdnId22Cum)

Data Source

RNC C-Node

Source Field

VS.IuAvgNbrSccpCnxCs.RdnId22.Cum

Source Section

RncEquipment

IuAvgNbrSccpCnxCsRdnId22Max

Average number of sccp connections on Iu CS interface (RdnId22Max)

Data Source

RNC C-Node

Source Field

VS.IuAvgNbrSccpCnxCs.RdnId22.Max

Source Section

RncEquipment

IuAvgNbrSccpCnxCsRdnId22Min

Average number of sccp connections on Iu CS interface (RdnId22Min)

Data Source

RNC C-Node

Source Field

VS.IuAvgNbrSccpCnxCs.RdnId22.Min

Source Section

RncEquipment

IuAvgNbrSccpCnxCsRdnId22NbEvt

Average number of sccp connections on Iu CS interface (RdnId22NbEvt)

Data Source

RNC C-Node

Source Field

VS.IuAvgNbrSccpCnxCs.RdnId22.NbEvt

Source Section

RncEquipment

IuAvgNbrSccpCnxCsRdnId23Avg

Average number of sccp connections on Iu CS interface (RdnId23Avg)

Data Source

RNC C-Node

Source Field

VS.IuAvgNbrSccpCnxCs.RdnId23.Avg

Source Section

RncEquipment

IuAvgNbrSccpCnxCsRdnId23Cum

Average number of sccp connections on Iu CS interface (RdnId23Cum)

Data Source

RNC C-Node

Source Field

VS.IuAvgNbrSccpCnxCs.RdnId23.Cum

Source Section

RncEquipment

IuAvgNbrSccpCnxCsRdnId23Max

Average number of sccp connections on Iu CS interface (RdnId23Max)

Data Source

RNC C-Node

Source Field

VS.IuAvgNbrSccpCnxCs.RdnId23.Max

Source Section

RncEquipment

IuAvgNbrSccpCnxCsRdnId23Min

Average number of sccp connections on Iu CS interface (RdnId23Min)

Data Source

RNC C-Node

Source Field

VS.IuAvgNbrSccpCnxCs.RdnId23.Min

Source Section

RncEquipment

IuAvgNbrSccpCnxCsRdnId23NbEvt

Average number of sccp connections on Iu CS interface (RdnId23NbEvt)

Data Source

RNC C-Node

Source Field

VS.IuAvgNbrSccpCnxCs.RdnId23.NbEvt

Source Section

RncEquipment

IuAvgNbrSccpCnxCsRdnId2Avg

Average number of sccp connections on Iu CS interface (RdnId2Avg)

Data Source

RNC C-Node

Source Field

VS.IuAvgNbrSccpCnxCs.RdnId2.Avg

Source Section

RncEquipment

IuAvgNbrSccpCnxCsRdnId2Cum

Average number of sccp connections on Iu CS interface (RdnId2Cum)

Data Source

RNC C-Node

Source Field

VS.IuAvgNbrSccpCnxCs.RdnId2.Cum

Source Section

RncEquipment

IuAvgNbrSccpCnxCsRdnId2Max

Average number of sccp connections on Iu CS interface (RdnId2Max)

Data Source

RNC C-Node

Source Field

VS.IuAvgNbrSccpCnxCs.RdnId2.Max

Source Section

RncEquipment

IuAvgNbrSccpCnxCsRdnId2Min

Average number of sccp connections on Iu CS interface (RdnId2Min)

Data Source

RNC C-Node

Source Field

VS.IuAvgNbrSccpCnxCs.RdnId2.Min

Source Section

RncEquipment

IuAvgNbrSccpCnxCsRdnId2NbEvt

Average number of sccp connections on Iu CS interface (RdnId2NbEvt)

Data Source

RNC C-Node

Source Field

VS.IuAvgNbrSccpCnxCs.RdnId2.NbEvt

Source Section

RncEquipment

IuAvgNbrSccpCnxCsRdnId3Avg

Average number of sccp connections on Iu CS interface (RdnId3Avg)

Data Source

RNC C-Node

Source Field

VS.IuAvgNbrSccpCnxCs.RdnId3.Avg

Source Section

RncEquipment

IuAvgNbrSccpCnxCsRdnId3Cum

Average number of sccp connections on Iu CS interface (RdnId3Cum)

Data Source

RNC C-Node

Source Field

VS.IuAvgNbrSccpCnxCs.RdnId3.Cum

Source Section

RncEquipment

IuAvgNbrSccpCnxCsRdnId3Max

Average number of sccp connections on Iu CS interface (RdnId3Max)

Data Source

RNC C-Node

Source Field

VS.IuAvgNbrSccpCnxCs.RdnId3.Max

Source Section

RncEquipment

IuAvgNbrSccpCnxCsRdnId3Min

Average number of sccp connections on Iu CS interface (RdnId3Min)

Data Source

RNC C-Node

Source Field

VS.IuAvgNbrSccpCnxCs.RdnId3.Min

Source Section

RncEquipment

IuAvgNbrSccpCnxCsRdnId3NbEvt

Average number of sccp connections on Iu CS interface (RdnId3NbEvt)

Data Source

RNC C-Node

Source Field

VS.IuAvgNbrSccpCnxCs.RdnId3.NbEvt

Source Section

RncEquipment

IuAvgNbrSccpCnxCsRdnId4Avg

Average number of sccp connections on Iu CS interface (RdnId4Avg)

Data Source

RNC C-Node

Source Field

VS.IuAvgNbrSccpCnxCs.RdnId4.Avg

Source Section

RncEquipment

IuAvgNbrSccpCnxCsRdnId4Cum

Average number of sccp connections on Iu CS interface (RdnId4Cum)

Data Source

RNC C-Node

Source Field

VS.IuAvgNbrSccpCnxCs.RdnId4.Cum

Source Section

RncEquipment

IuAvgNbrSccpCnxCsRdnId4Max

Average number of sccp connections on Iu CS interface (RdnId4Max)

Data Source

RNC C-Node

Source Field

VS.IuAvgNbrSccpCnxCs.RdnId4.Max

Source Section

RncEquipment

IuAvgNbrSccpCnxCsRdnId4Min

Average number of sccp connections on Iu CS interface (RdnId4Min)

Data Source

RNC C-Node

Source Field

VS.IuAvgNbrSccpCnxCs.RdnId4.Min

Source Section

RncEquipment

IuAvgNbrSccpCnxCsRdnId4NbEvt

Average number of sccp connections on Iu CS interface (RdnId4NbEvt)

Data Source

RNC C-Node

Source Field

VS.IuAvgNbrSccpCnxCs.RdnId4.NbEvt

Source Section

RncEquipment

IuAvgNbrSccpCnxCsRdnId5Avg

Average number of sccp connections on Iu CS interface (RdnId5Avg)

Data Source

RNC C-Node

Source Field

VS.IuAvgNbrSccpCnxCs.RdnId5.Avg

Source Section

RncEquipment

IuAvgNbrSccpCnxCsRdnId5Cum

Average number of sccp connections on Iu CS interface (RdnId5Cum)

Data Source

RNC C-Node

Source Field

VS.IuAvgNbrSccpCnxCs.RdnId5.Cum

Source Section

RncEquipment

IuAvgNbrSccpCnxCsRdnId5Max

Average number of sccp connections on Iu CS interface (RdnId5Max)

Data Source

RNC C-Node

Source Field

VS.IuAvgNbrSccpCnxCs.RdnId5.Max

Source Section

RncEquipment

IuAvgNbrSccpCnxCsRdnId5Min

Average number of sccp connections on Iu CS interface (RdnId5Min)

Data Source

RNC C-Node

Source Field

VS.IuAvgNbrSccpCnxCs.RdnId5.Min

Source Section

RncEquipment

IuAvgNbrSccpCnxCsRdnId5NbEvt

Average number of sccp connections on Iu CS interface (RdnId5NbEvt)

Data Source

RNC C-Node

Source Field

VS.IuAvgNbrSccpCnxCs.RdnId5.NbEvt

Source Section

RncEquipment

IuAvgNbrSccpCnxCsRdnId6Avg

Average number of sccp connections on Iu CS interface (RdnId6Avg)

Data Source

RNC C-Node

Source Field

VS.IuAvgNbrSccpCnxCs.RdnId6.Avg

Source Section

RncEquipment

IuAvgNbrSccpCnxCsRdnId6Cum

Average number of sccp connections on Iu CS interface (RdnId6Cum)

Data Source

RNC C-Node

Source Field

VS.IuAvgNbrSccpCnxCs.RdnId6.Cum

Source Section

RncEquipment

IuAvgNbrSccpCnxCsRdnId6Max

Average number of sccp connections on Iu CS interface (RdnId6Max)

Data Source

RNC C-Node

Source Field

VS.IuAvgNbrSccpCnxCs.RdnId6.Max

Source Section

RncEquipment

IuAvgNbrSccpCnxCsRdnId6Min

Average number of sccp connections on Iu CS interface (RdnId6Min)

Data Source

RNC C-Node

Source Field

VS.IuAvgNbrSccpCnxCs.RdnId6.Min

Source Section

RncEquipment

IuAvgNbrSccpCnxCsRdnId6NbEvt

Average number of sccp connections on Iu CS interface (RdnId6NbEvt)

Data Source

RNC C-Node

Source Field

VS.IuAvgNbrSccpCnxCs.RdnId6.NbEvt

Source Section

RncEquipment

IuAvgNbrSccpCnxCsRdnId7Avg

Average number of sccp connections on Iu CS interface (RdnId7Avg)

Data Source

RNC C-Node

Source Field

VS.IuAvgNbrSccpCnxCs.RdnId7.Avg

Source Section

RncEquipment

IuAvgNbrSccpCnxCsRdnId7Cum

Average number of sccp connections on Iu CS interface (RdnId7Cum)

Data Source

RNC C-Node

Source Field

VS.IuAvgNbrSccpCnxCs.RdnId7.Cum

Source Section

RncEquipment

IuAvgNbrSccpCnxCsRdnId7Max

Average number of sccp connections on Iu CS interface (RdnId7Max)

Data Source

RNC C-Node

Source Field

VS.IuAvgNbrSccpCnxCs.RdnId7.Max

Source Section

RncEquipment

IuAvgNbrSccpCnxCsRdnId7Min

Average number of sccp connections on Iu CS interface (RdnId7Min)

Data Source

RNC C-Node

Source Field

VS.IuAvgNbrSccpCnxCs.RdnId7.Min

Source Section

RncEquipment

IuAvgNbrSccpCnxCsRdnId7NbEvt

Average number of sccp connections on Iu CS interface (RdnId7NbEvt)

Data Source

RNC C-Node

Source Field

VS.IuAvgNbrSccpCnxCs.RdnId7.NbEvt

Source Section

RncEquipment

IuAvgNbrSccpCnxCsRdnId8Avg

Average number of sccp connections on Iu CS interface (RdnId8Avg)

Data Source

RNC C-Node

Source Field

VS.IuAvgNbrSccpCnxCs.RdnId8.Avg

Source Section

RncEquipment

IuAvgNbrSccpCnxCsRdnId8Cum

Average number of sccp connections on Iu CS interface (RdnId8Cum)

Data Source

RNC C-Node

Source Field

VS.IuAvgNbrSccpCnxCs.RdnId8.Cum

Source Section

RncEquipment

IuAvgNbrSccpCnxCsRdnId8Max

Average number of sccp connections on Iu CS interface (RdnId8Max)

Data Source

RNC C-Node

Source Field

VS.IuAvgNbrSccpCnxCs.RdnId8.Max

Source Section

RncEquipment

IuAvgNbrSccpCnxCsRdnId8Min

Average number of sccp connections on Iu CS interface (RdnId8Min)

Data Source

RNC C-Node

Source Field

VS.IuAvgNbrSccpCnxCs.RdnId8.Min

Source Section

RncEquipment

IuAvgNbrSccpCnxCsRdnId8NbEvt

Average number of sccp connections on Iu CS interface (RdnId8NbEvt)

Data Source

RNC C-Node

Source Field

VS.IuAvgNbrSccpCnxCs.RdnId8.NbEvt

Source Section

RncEquipment

IuAvgNbrSccpCnxCsRdnId9Avg

Average number of sccp connections on Iu CS interface (RdnId9Avg)

Data Source

RNC C-Node

Source Field

VS.IuAvgNbrSccpCnxCs.RdnId9.Avg

Source Section

RncEquipment

IuAvgNbrSccpCnxCsRdnId9Cum

Average number of sccp connections on Iu CS interface (RdnId9Cum)

Data Source

RNC C-Node

Source Field

VS.IuAvgNbrSccpCnxCs.RdnId9.Cum

Source Section

RncEquipment

IuAvgNbrSccpCnxCsRdnId9Max

Average number of sccp connections on Iu CS interface (RdnId9Max)

Data Source

RNC C-Node

Source Field

VS.IuAvgNbrSccpCnxCs.RdnId9.Max

Source Section

RncEquipment

IuAvgNbrSccpCnxCsRdnId9Min

Average number of sccp connections on Iu CS interface (RdnId9Min)

Data Source

RNC C-Node

Source Field

VS.IuAvgNbrSccpCnxCs.RdnId9.Min

Source Section

RncEquipment

IuAvgNbrSccpCnxCsRdnId9NbEvt

Average number of sccp connections on Iu CS interface (RdnId9NbEvt)

Data Source

RNC C-Node

Source Field

VS.IuAvgNbrSccpCnxCs.RdnId9.NbEvt

Source Section

RncEquipment

IuAvgNbrSccpCnxPsRdnId0Avg

Average number of sccp connections on Iu PS interface (RdnId0Avg)

Data Source

RNC C-Node

Source Field

VS.IuAvgNbrSccpCnxPs.RdnId0.Avg

Source Section

RncEquipment

IuAvgNbrSccpCnxPsRdnId0Cum

Average number of sccp connections on Iu PS interface (RdnId0Cum)

Data Source

RNC C-Node

Source Field

VS.IuAvgNbrSccpCnxPs.RdnId0.Cum

Source Section

RncEquipment

IuAvgNbrSccpCnxPsRdnId0Max

Average number of sccp connections on Iu PS interface (RdnId0Max)

Data Source

RNC C-Node

Source Field

VS.IuAvgNbrSccpCnxPs.RdnId0.Max

Source Section

RncEquipment

IuAvgNbrSccpCnxPsRdnId0Min

Average number of sccp connections on Iu PS interface (RdnId0Min)

Data Source

RNC C-Node

Source Field

VS.IuAvgNbrSccpCnxPs.RdnId0.Min

Source Section

RncEquipment

IuAvgNbrSccpCnxPsRdnId0NbEvt

Average number of sccp connections on Iu PS interface (RdnId0NbEvt)

Data Source

RNC C-Node

Source Field

VS.IuAvgNbrSccpCnxPs.RdnId0.NbEvt

Source Section

RncEquipment

IuAvgNbrSccpCnxPsRdnId10Avg

Average number of sccp connections on Iu PS interface (RdnId10Avg)

Data Source

RNC C-Node

Source Field

VS.IuAvgNbrSccpCnxPs.RdnId10.Avg

Source Section

RncEquipment

IuAvgNbrSccpCnxPsRdnId10Cum

Average number of sccp connections on Iu PS interface (RdnId10Cum)

Data Source

RNC C-Node

Source Field

VS.IuAvgNbrSccpCnxPs.RdnId10.Cum

Source Section

RncEquipment

IuAvgNbrSccpCnxPsRdnId10Max

Average number of sccp connections on Iu PS interface (RdnId10Max)

Data Source

RNC C-Node

Source Field

VS.IuAvgNbrSccpCnxPs.RdnId10.Max

Source Section

RncEquipment

IuAvgNbrSccpCnxPsRdnId10Min

Average number of sccp connections on Iu PS interface (RdnId10Min)

Data Source

RNC C-Node

Source Field

VS.IuAvgNbrSccpCnxPs.RdnId10.Min

Source Section

RncEquipment

IuAvgNbrSccpCnxPsRdnId10NbEvt

Average number of sccp connections on Iu PS interface (RdnId10NbEvt)

Data Source

RNC C-Node

Source Field

VS.IuAvgNbrSccpCnxPs.RdnId10.NbEvt

Source Section

RncEquipment

IuAvgNbrSccpCnxPsRdnId11Avg

Average number of sccp connections on Iu PS interface (RdnId11Avg)

Data Source

RNC C-Node

Source Field

VS.IuAvgNbrSccpCnxPs.RdnId11.Avg

Source Section

RncEquipment

IuAvgNbrSccpCnxPsRdnId11Cum

Average number of sccp connections on Iu PS interface (RdnId11Cum)

Data Source

RNC C-Node

Source Field

VS.IuAvgNbrSccpCnxPs.RdnId11.Cum

Source Section

RncEquipment

IuAvgNbrSccpCnxPsRdnId11Max

Average number of sccp connections on Iu PS interface (RdnId11Max)

Data Source

RNC C-Node

Source Field

VS.IuAvgNbrSccpCnxPs.RdnId11.Max

Source Section

RncEquipment

IuAvgNbrSccpCnxPsRdnId11Min

Average number of sccp connections on Iu PS interface (RdnId11Min)

Data Source

RNC C-Node

Source Field

VS.IuAvgNbrSccpCnxPs.RdnId11.Min

Source Section

RncEquipment

IuAvgNbrSccpCnxPsRdnId11NbEvt

Average number of sccp connections on Iu PS interface (RdnId11NbEvt)

Data Source

RNC C-Node

Source Field

VS.IuAvgNbrSccpCnxPs.RdnId11.NbEvt

Source Section

RncEquipment

IuAvgNbrSccpCnxPsRdnId12Avg

Average number of sccp connections on Iu PS interface (RdnId12Avg)

Data Source

RNC C-Node

Source Field

VS.IuAvgNbrSccpCnxPs.RdnId12.Avg

Source Section

RncEquipment

IuAvgNbrSccpCnxPsRdnId12Cum

Average number of sccp connections on Iu PS interface (RdnId12Cum)

Data Source

RNC C-Node

Source Field

VS.IuAvgNbrSccpCnxPs.RdnId12.Cum

Source Section

RncEquipment

IuAvgNbrSccpCnxPsRdnId12Max

Average number of sccp connections on Iu PS interface (RdnId12Max)

Data Source

RNC C-Node

Source Field

VS.IuAvgNbrSccpCnxPs.RdnId12.Max

Source Section

RncEquipment

IuAvgNbrSccpCnxPsRdnId12Min

Average number of sccp connections on Iu PS interface (RdnId12Min)

Data Source

RNC C-Node

Source Field

VS.IuAvgNbrSccpCnxPs.RdnId12.Min

Source Section

RncEquipment

IuAvgNbrSccpCnxPsRdnId12NbEvt

Average number of sccp connections on Iu PS interface (RdnId12NbEvt)

Data Source

RNC C-Node

Source Field

VS.IuAvgNbrSccpCnxPs.RdnId12.NbEvt

Source Section

RncEquipment

IuAvgNbrSccpCnxPsRdnId13Avg

Average number of sccp connections on Iu PS interface (RdnId13Avg)

Data Source

RNC C-Node

Source Field

VS.IuAvgNbrSccpCnxPs.RdnId13.Avg

Source Section

RncEquipment

IuAvgNbrSccpCnxPsRdnId13Cum

Average number of sccp connections on Iu PS interface (RdnId13Cum)

Data Source

RNC C-Node

Source Field

VS.IuAvgNbrSccpCnxPs.RdnId13.Cum

Source Section

RncEquipment

IuAvgNbrSccpCnxPsRdnId13Max

Average number of sccp connections on Iu PS interface (RdnId13Max)

Data Source

RNC C-Node

Source Field

VS.IuAvgNbrSccpCnxPs.RdnId13.Max

Source Section

RncEquipment

IuAvgNbrSccpCnxPsRdnId13Min

Average number of sccp connections on Iu PS interface (RdnId13Min)

Data Source

RNC C-Node

Source Field

VS.IuAvgNbrSccpCnxPs.RdnId13.Min

Source Section

RncEquipment

IuAvgNbrSccpCnxPsRdnId13NbEvt

Average number of sccp connections on Iu PS interface (RdnId13NbEvt)

Data Source

RNC C-Node

Source Field

VS.IuAvgNbrSccpCnxPs.RdnId13.NbEvt

Source Section

RncEquipment

IuAvgNbrSccpCnxPsRdnId14Avg

Average number of sccp connections on Iu PS interface (RdnId14Avg)

Data Source

RNC C-Node

Source Field

VS.IuAvgNbrSccpCnxPs.RdnId14.Avg

Source Section

RncEquipment

IuAvgNbrSccpCnxPsRdnId14Cum

Average number of sccp connections on Iu PS interface (RdnId14Cum)

Data Source

RNC C-Node

Source Field

VS.IuAvgNbrSccpCnxPs.RdnId14.Cum

Source Section

RncEquipment

IuAvgNbrSccpCnxPsRdnId14Max

Average number of sccp connections on Iu PS interface (RdnId14Max)

Data Source

RNC C-Node

Source Field

VS.IuAvgNbrSccpCnxPs.RdnId14.Max

Source Section

RncEquipment

IuAvgNbrSccpCnxPsRdnId14Min

Average number of sccp connections on Iu PS interface (RdnId14Min)

Data Source

RNC C-Node

Source Field

VS.IuAvgNbrSccpCnxPs.RdnId14.Min

Source Section

RncEquipment

IuAvgNbrSccpCnxPsRdnId14NbEvt

Average number of sccp connections on Iu PS interface (RdnId14NbEvt)

Data Source

RNC C-Node

Source Field

VS.IuAvgNbrSccpCnxPs.RdnId14.NbEvt

Source Section

RncEquipment

IuAvgNbrSccpCnxPsRdnId15Avg

Average number of sccp connections on Iu PS interface (RdnId15Avg)

Data Source

RNC C-Node

Source Field

VS.IuAvgNbrSccpCnxPs.RdnId15.Avg

Source Section

RncEquipment

IuAvgNbrSccpCnxPsRdnId15Cum

Average number of sccp connections on Iu PS interface (RdnId15Cum)

Data Source

RNC C-Node

Source Field

VS.IuAvgNbrSccpCnxPs.RdnId15.Cum

Source Section

RncEquipment

IuAvgNbrSccpCnxPsRdnId15Max

Average number of sccp connections on Iu PS interface (RdnId15Max)

Data Source

RNC C-Node

Source Field

VS.IuAvgNbrSccpCnxPs.RdnId15.Max

Source Section

RncEquipment

IuAvgNbrSccpCnxPsRdnId15Min

Average number of sccp connections on Iu PS interface (RdnId15Min)

Data Source

RNC C-Node

Source Field

VS.IuAvgNbrSccpCnxPs.RdnId15.Min

Source Section

RncEquipment

IuAvgNbrSccpCnxPsRdnId15NbEvt

Average number of sccp connections on Iu PS interface (RdnId15NbEvt)

Data Source

RNC C-Node

Source Field

VS.IuAvgNbrSccpCnxPs.RdnId15.NbEvt

Source Section

RncEquipment

IuAvgNbrSccpCnxPsRdnId16Avg

Average number of sccp connections on Iu PS interface (RdnId16Avg)

Data Source

RNC C-Node

Source Field

VS.IuAvgNbrSccpCnxPs.RdnId16.Avg

Source Section

RncEquipment

IuAvgNbrSccpCnxPsRdnId16Cum

Average number of sccp connections on Iu PS interface (RdnId16Cum)

Data Source

RNC C-Node

Source Field

VS.IuAvgNbrSccpCnxPs.RdnId16.Cum

Source Section

RncEquipment

IuAvgNbrSccpCnxPsRdnId16Max

Average number of sccp connections on Iu PS interface (RdnId16Max)

Data Source

RNC C-Node

Source Field

VS.IuAvgNbrSccpCnxPs.RdnId16.Max

Source Section

RncEquipment

IuAvgNbrSccpCnxPsRdnId16Min

Average number of sccp connections on Iu PS interface (RdnId16Min)

Data Source

RNC C-Node

Source Field

VS.IuAvgNbrSccpCnxPs.RdnId16.Min

Source Section

RncEquipment

IuAvgNbrSccpCnxPsRdnId16NbEvt

Average number of sccp connections on Iu PS interface (RdnId16NbEvt)

Data Source

RNC C-Node

Source Field

VS.IuAvgNbrSccpCnxPs.RdnId16.NbEvt

Source Section

RncEquipment

IuAvgNbrSccpCnxPsRdnId17Avg

Average number of sccp connections on Iu PS interface (RdnId17Avg)

Data Source

RNC C-Node

Source Field

VS.IuAvgNbrSccpCnxPs.RdnId17.Avg

Source Section

RncEquipment

IuAvgNbrSccpCnxPsRdnId17Cum

Average number of sccp connections on Iu PS interface (RdnId17Cum)

Data Source

RNC C-Node

Source Field

VS.IuAvgNbrSccpCnxPs.RdnId17.Cum

Source Section

RncEquipment

IuAvgNbrSccpCnxPsRdnId17Max

Average number of sccp connections on Iu PS interface (RdnId17Max)

Data Source

RNC C-Node

Source Field

VS.IuAvgNbrSccpCnxPs.RdnId17.Max

Source Section

RncEquipment

IuAvgNbrSccpCnxPsRdnId17Min

Average number of sccp connections on Iu PS interface (RdnId17Min)

Data Source

RNC C-Node

Source Field

VS.IuAvgNbrSccpCnxPs.RdnId17.Min

Source Section

RncEquipment

IuAvgNbrSccpCnxPsRdnId17NbEvt

Average number of sccp connections on Iu PS interface (RdnId17NbEvt)

Data Source

RNC C-Node

Source Field

VS.IuAvgNbrSccpCnxPs.RdnId17.NbEvt

Source Section

RncEquipment

IuAvgNbrSccpCnxPsRdnId18Avg

Average number of sccp connections on Iu PS interface (RdnId18Avg)

Data Source

RNC C-Node

Source Field

VS.IuAvgNbrSccpCnxPs.RdnId18.Avg

Source Section

RncEquipment

IuAvgNbrSccpCnxPsRdnId18Cum

Average number of sccp connections on Iu PS interface (RdnId18Cum)

Data Source

RNC C-Node

Source Field

VS.IuAvgNbrSccpCnxPs.RdnId18.Cum

Source Section

RncEquipment

IuAvgNbrSccpCnxPsRdnId18Max

Average number of sccp connections on Iu PS interface (RdnId18Max)

Data Source

RNC C-Node

Source Field

VS.IuAvgNbrSccpCnxPs.RdnId18.Max

Source Section

RncEquipment

IuAvgNbrSccpCnxPsRdnId18Min

Average number of sccp connections on Iu PS interface (RdnId18Min)

Data Source

RNC C-Node

Source Field

VS.IuAvgNbrSccpCnxPs.RdnId18.Min

Source Section

RncEquipment

IuAvgNbrSccpCnxPsRdnId18NbEvt

Average number of sccp connections on Iu PS interface (RdnId18NbEvt)

Data Source

RNC C-Node

Source Field

VS.IuAvgNbrSccpCnxPs.RdnId18.NbEvt

Source Section

RncEquipment

IuAvgNbrSccpCnxPsRdnId19Avg

Average number of sccp connections on Iu PS interface (RdnId19Avg)

Data Source

RNC C-Node

Source Field

VS.IuAvgNbrSccpCnxPs.RdnId19.Avg

Source Section

RncEquipment

IuAvgNbrSccpCnxPsRdnId19Cum

Average number of sccp connections on Iu PS interface (RdnId19Cum)

Data Source

RNC C-Node

Source Field

VS.IuAvgNbrSccpCnxPs.RdnId19.Cum

Source Section

RncEquipment

IuAvgNbrSccpCnxPsRdnId19Max

Average number of sccp connections on Iu PS interface (RdnId19Max)

Data Source

RNC C-Node

Source Field

VS.IuAvgNbrSccpCnxPs.RdnId19.Max

Source Section

RncEquipment

IuAvgNbrSccpCnxPsRdnId19Min

Average number of sccp connections on Iu PS interface (RdnId19Min)

Data Source

RNC C-Node

Source Field

VS.IuAvgNbrSccpCnxPs.RdnId19.Min

Source Section

RncEquipment

IuAvgNbrSccpCnxPsRdnId19NbEvt

Average number of sccp connections on Iu PS interface (RdnId19NbEvt)

Data Source

RNC C-Node

Source Field

VS.IuAvgNbrSccpCnxPs.RdnId19.NbEvt

Source Section

RncEquipment

IuAvgNbrSccpCnxPsRdnId1Avg

Average number of sccp connections on Iu PS interface (RdnId1Avg)

Data Source

RNC C-Node

Source Field

VS.IuAvgNbrSccpCnxPs.RdnId1.Avg

Source Section

RncEquipment

IuAvgNbrSccpCnxPsRdnId1Cum

Average number of sccp connections on Iu PS interface (RdnId1Cum)

Data Source

RNC C-Node

Source Field

VS.IuAvgNbrSccpCnxPs.RdnId1.Cum

Source Section

RncEquipment

IuAvgNbrSccpCnxPsRdnId1Max

Average number of sccp connections on Iu PS interface (RdnId1Max)

Data Source

RNC C-Node

Source Field

VS.IuAvgNbrSccpCnxPs.RdnId1.Max

Source Section

RncEquipment

IuAvgNbrSccpCnxPsRdnId1Min

Average number of sccp connections on Iu PS interface (RdnId1Min)

Data Source

RNC C-Node

Source Field

VS.IuAvgNbrSccpCnxPs.RdnId1.Min

Source Section

RncEquipment

IuAvgNbrSccpCnxPsRdnId1NbEvt

Average number of sccp connections on Iu PS interface (RdnId1NbEvt)

Data Source

RNC C-Node

Source Field

VS.IuAvgNbrSccpCnxPs.RdnId1.NbEvt

Source Section

RncEquipment

IuAvgNbrSccpCnxPsRdnId20Avg

Average number of sccp connections on Iu PS interface (RdnId20Avg)

Data Source

RNC C-Node

Source Field

VS.IuAvgNbrSccpCnxPs.RdnId20.Avg

Source Section

RncEquipment

IuAvgNbrSccpCnxPsRdnId20Cum

Average number of sccp connections on Iu PS interface (RdnId20Cum)

Data Source

RNC C-Node

Source Field

VS.IuAvgNbrSccpCnxPs.RdnId20.Cum

Source Section

RncEquipment

IuAvgNbrSccpCnxPsRdnId20Max

Average number of sccp connections on Iu PS interface (RdnId20Max)

Data Source

RNC C-Node

Source Field

VS.IuAvgNbrSccpCnxPs.RdnId20.Max

Source Section

RncEquipment

IuAvgNbrSccpCnxPsRdnId20Min

Average number of sccp connections on Iu PS interface (RdnId20Min)

Data Source

RNC C-Node

Source Field

VS.IuAvgNbrSccpCnxPs.RdnId20.Min

Source Section

RncEquipment

IuAvgNbrSccpCnxPsRdnId20NbEvt

Average number of sccp connections on Iu PS interface (RdnId20NbEvt)

Data Source

RNC C-Node

Source Field

VS.IuAvgNbrSccpCnxPs.RdnId20.NbEvt

Source Section

RncEquipment

IuAvgNbrSccpCnxPsRdnId21Avg

Average number of sccp connections on Iu PS interface (RdnId21Avg)

Data Source

RNC C-Node

Source Field

VS.IuAvgNbrSccpCnxPs.RdnId21.Avg

Source Section

RncEquipment

IuAvgNbrSccpCnxPsRdnId21Cum

Average number of sccp connections on Iu PS interface (RdnId21Cum)

Data Source

RNC C-Node

Source Field

VS.IuAvgNbrSccpCnxPs.RdnId21.Cum

Source Section

RncEquipment

IuAvgNbrSccpCnxPsRdnId21Max

Average number of sccp connections on Iu PS interface (RdnId21Max)

Data Source

RNC C-Node

Source Field

VS.IuAvgNbrSccpCnxPs.RdnId21.Max

Source Section

RncEquipment

IuAvgNbrSccpCnxPsRdnId21Min

Average number of sccp connections on Iu PS interface (RdnId21Min)

Data Source

RNC C-Node

Source Field

VS.IuAvgNbrSccpCnxPs.RdnId21.Min

Source Section

RncEquipment

IuAvgNbrSccpCnxPsRdnId21NbEvt

Average number of sccp connections on Iu PS interface (RdnId21NbEvt)

Data Source

RNC C-Node

Source Field

VS.IuAvgNbrSccpCnxPs.RdnId21.NbEvt

Source Section

RncEquipment

IuAvgNbrSccpCnxPsRdnId22Avg

Average number of sccp connections on Iu PS interface (RdnId22Avg)

Data Source

RNC C-Node

Source Field

VS.IuAvgNbrSccpCnxPs.RdnId22.Avg

Source Section

RncEquipment

IuAvgNbrSccpCnxPsRdnId22Cum

Average number of sccp connections on Iu PS interface (RdnId22Cum)

Data Source

RNC C-Node

Source Field

VS.IuAvgNbrSccpCnxPs.RdnId22.Cum

Source Section

RncEquipment

IuAvgNbrSccpCnxPsRdnId22Max

Average number of sccp connections on Iu PS interface (RdnId22Max)

Data Source

RNC C-Node

Source Field

VS.IuAvgNbrSccpCnxPs.RdnId22.Max

Source Section

RncEquipment

IuAvgNbrSccpCnxPsRdnId22Min

Average number of sccp connections on Iu PS interface (RdnId22Min)

Data Source

RNC C-Node

Source Field

VS.IuAvgNbrSccpCnxPs.RdnId22.Min

Source Section

RncEquipment

IuAvgNbrSccpCnxPsRdnId22NbEvt

Average number of sccp connections on Iu PS interface (RdnId22NbEvt)

Data Source

RNC C-Node

Source Field

VS.IuAvgNbrSccpCnxPs.RdnId22.NbEvt

Source Section

RncEquipment

IuAvgNbrSccpCnxPsRdnId23Avg

Average number of sccp connections on Iu PS interface (RdnId23Avg)

Data Source

RNC C-Node

Source Field

VS.IuAvgNbrSccpCnxPs.RdnId23.Avg

Source Section

RncEquipment

IuAvgNbrSccpCnxPsRdnId23Cum

Average number of sccp connections on Iu PS interface (RdnId23Cum)

Data Source

RNC C-Node

Source Field

VS.IuAvgNbrSccpCnxPs.RdnId23.Cum

Source Section

RncEquipment

IuAvgNbrSccpCnxPsRdnId23Max

Average number of sccp connections on Iu PS interface (RdnId23Max)

Data Source

RNC C-Node

Source Field

VS.IuAvgNbrSccpCnxPs.RdnId23.Max

Source Section

RncEquipment

IuAvgNbrSccpCnxPsRdnId23Min

Average number of sccp connections on Iu PS interface (RdnId23Min)

Data Source

RNC C-Node

Source Field

VS.IuAvgNbrSccpCnxPs.RdnId23.Min

Source Section

RncEquipment

IuAvgNbrSccpCnxPsRdnId23NbEvt

Average number of sccp connections on Iu PS interface (RdnId23NbEvt)

Data Source

RNC C-Node

Source Field

VS.IuAvgNbrSccpCnxPs.RdnId23.NbEvt

Source Section

RncEquipment

IuAvgNbrSccpCnxPsRdnId2Avg

Average number of sccp connections on Iu PS interface (RdnId2Avg)

Data Source

RNC C-Node

Source Field

VS.IuAvgNbrSccpCnxPs.RdnId2.Avg

Source Section

RncEquipment

IuAvgNbrSccpCnxPsRdnId2Cum

Average number of sccp connections on Iu PS interface (RdnId2Cum)

Data Source

RNC C-Node

Source Field

VS.IuAvgNbrSccpCnxPs.RdnId2.Cum

Source Section

RncEquipment

IuAvgNbrSccpCnxPsRdnId2Max

Average number of sccp connections on Iu PS interface (RdnId2Max)

Data Source

RNC C-Node

Source Field

VS.IuAvgNbrSccpCnxPs.RdnId2.Max

Source Section

RncEquipment

IuAvgNbrSccpCnxPsRdnId2Min

Average number of sccp connections on Iu PS interface (RdnId2Min)

Data Source

RNC C-Node

Source Field

VS.IuAvgNbrSccpCnxPs.RdnId2.Min

Source Section

RncEquipment

IuAvgNbrSccpCnxPsRdnId2NbEvt

Average number of sccp connections on Iu PS interface (RdnId2NbEvt)

Data Source

RNC C-Node

Source Field

VS.IuAvgNbrSccpCnxPs.RdnId2.NbEvt

Source Section

RncEquipment

IuAvgNbrSccpCnxPsRdnId3Avg

Average number of sccp connections on Iu PS interface (RdnId3Avg)

Data Source

RNC C-Node

Source Field

VS.IuAvgNbrSccpCnxPs.RdnId3.Avg

Source Section

RncEquipment

IuAvgNbrSccpCnxPsRdnId3Cum

Average number of sccp connections on Iu PS interface (RdnId3Cum)

Data Source

RNC C-Node

Source Field

VS.IuAvgNbrSccpCnxPs.RdnId3.Cum

Source Section

RncEquipment

IuAvgNbrSccpCnxPsRdnId3Max

Average number of sccp connections on Iu PS interface (RdnId3Max)

Data Source

RNC C-Node

Source Field

VS.IuAvgNbrSccpCnxPs.RdnId3.Max

Source Section

RncEquipment

IuAvgNbrSccpCnxPsRdnId3Min

Average number of sccp connections on Iu PS interface (RdnId3Min)

Data Source

RNC C-Node

Source Field

VS.IuAvgNbrSccpCnxPs.RdnId3.Min

Source Section

RncEquipment

IuAvgNbrSccpCnxPsRdnId3NbEvt

Average number of sccp connections on Iu PS interface (RdnId3NbEvt)

Data Source

RNC C-Node

Source Field

VS.IuAvgNbrSccpCnxPs.RdnId3.NbEvt

Source Section

RncEquipment

IuAvgNbrSccpCnxPsRdnId4Avg

Average number of sccp connections on Iu PS interface (RdnId4Avg)

Data Source

RNC C-Node

Source Field

VS.IuAvgNbrSccpCnxPs.RdnId4.Avg

Source Section

RncEquipment

IuAvgNbrSccpCnxPsRdnId4Cum

Average number of sccp connections on Iu PS interface (RdnId4Cum)

Data Source

RNC C-Node

Source Field

VS.IuAvgNbrSccpCnxPs.RdnId4.Cum

Source Section

RncEquipment

IuAvgNbrSccpCnxPsRdnId4Max

Average number of sccp connections on Iu PS interface (RdnId4Max)

Data Source

RNC C-Node

Source Field

VS.IuAvgNbrSccpCnxPs.RdnId4.Max

Source Section

RncEquipment

IuAvgNbrSccpCnxPsRdnId4Min

Average number of sccp connections on Iu PS interface (RdnId4Min)

Data Source

RNC C-Node

Source Field

VS.IuAvgNbrSccpCnxPs.RdnId4.Min

Source Section

RncEquipment

IuAvgNbrSccpCnxPsRdnId4NbEvt

Average number of sccp connections on Iu PS interface (RdnId4NbEvt)

Data Source

RNC C-Node

Source Field

VS.IuAvgNbrSccpCnxPs.RdnId4.NbEvt

Source Section

RncEquipment

IuAvgNbrSccpCnxPsRdnId5Avg

Average number of sccp connections on Iu PS interface (RdnId5Avg)

Data Source

RNC C-Node

Source Field

VS.IuAvgNbrSccpCnxPs.RdnId5.Avg

Source Section

RncEquipment

IuAvgNbrSccpCnxPsRdnId5Cum

Average number of sccp connections on Iu PS interface (RdnId5Cum)

Data Source

RNC C-Node

Source Field

VS.IuAvgNbrSccpCnxPs.RdnId5.Cum

Source Section

RncEquipment

IuAvgNbrSccpCnxPsRdnId5Max

Average number of sccp connections on Iu PS interface (RdnId5Max)

Data Source

RNC C-Node

Source Field

VS.IuAvgNbrSccpCnxPs.RdnId5.Max

Source Section

RncEquipment

IuAvgNbrSccpCnxPsRdnId5Min

Average number of sccp connections on Iu PS interface (RdnId5Min)

Data Source

RNC C-Node

Source Field

VS.IuAvgNbrSccpCnxPs.RdnId5.Min

Source Section

RncEquipment

IuAvgNbrSccpCnxPsRdnId5NbEvt

Average number of sccp connections on Iu PS interface (RdnId5NbEvt)

Data Source

RNC C-Node

Source Field

VS.IuAvgNbrSccpCnxPs.RdnId5.NbEvt

Source Section

RncEquipment

IuAvgNbrSccpCnxPsRdnId6Avg

Average number of sccp connections on Iu PS interface (RdnId6Avg)

Data Source

RNC C-Node

Source Field

VS.IuAvgNbrSccpCnxPs.RdnId6.Avg

Source Section

RncEquipment

IuAvgNbrSccpCnxPsRdnId6Cum

Average number of sccp connections on Iu PS interface (RdnId6Cum)

Data Source

RNC C-Node

Source Field

VS.IuAvgNbrSccpCnxPs.RdnId6.Cum

Source Section

RncEquipment

IuAvgNbrSccpCnxPsRdnId6Max

Average number of sccp connections on Iu PS interface (RdnId6Max)

Data Source

RNC C-Node

Source Field

VS.IuAvgNbrSccpCnxPs.RdnId6.Max

Source Section

RncEquipment

IuAvgNbrSccpCnxPsRdnId6Min

Average number of sccp connections on Iu PS interface (RdnId6Min)

Data Source

RNC C-Node

Source Field

VS.IuAvgNbrSccpCnxPs.RdnId6.Min

Source Section

RncEquipment

IuAvgNbrSccpCnxPsRdnId6NbEvt

Average number of sccp connections on Iu PS interface (RdnId6NbEvt)

Data Source

RNC C-Node

Source Field

VS.IuAvgNbrSccpCnxPs.RdnId6.NbEvt

Source Section

RncEquipment

IuAvgNbrSccpCnxPsRdnId7Avg

Average number of sccp connections on Iu PS interface (RdnId7Avg)

Data Source

RNC C-Node

Source Field

VS.IuAvgNbrSccpCnxPs.RdnId7.Avg

Source Section

RncEquipment

IuAvgNbrSccpCnxPsRdnId7Cum

Average number of sccp connections on Iu PS interface (RdnId7Cum)

Data Source

RNC C-Node

Source Field

VS.IuAvgNbrSccpCnxPs.RdnId7.Cum

Source Section

RncEquipment

IuAvgNbrSccpCnxPsRdnId7Max

Average number of sccp connections on Iu PS interface (RdnId7Max)

Data Source

RNC C-Node

Source Field

VS.IuAvgNbrSccpCnxPs.RdnId7.Max

Source Section

RncEquipment

IuAvgNbrSccpCnxPsRdnId7Min

Average number of sccp connections on Iu PS interface (RdnId7Min)

Data Source

RNC C-Node

Source Field

VS.IuAvgNbrSccpCnxPs.RdnId7.Min

Source Section

RncEquipment

IuAvgNbrSccpCnxPsRdnId7NbEvt

Average number of sccp connections on Iu PS interface (RdnId7NbEvt)

Data Source

RNC C-Node

Source Field

VS.IuAvgNbrSccpCnxPs.RdnId7.NbEvt

Source Section

RncEquipment

IuAvgNbrSccpCnxPsRdnId8Avg

Average number of sccp connections on Iu PS interface (RdnId8Avg)

Data Source

RNC C-Node

Source Field

VS.IuAvgNbrSccpCnxPs.RdnId8.Avg

Source Section

RncEquipment

IuAvgNbrSccpCnxPsRdnId8Cum

Average number of sccp connections on Iu PS interface (RdnId8Cum)

Data Source

RNC C-Node

Source Field

VS.IuAvgNbrSccpCnxPs.RdnId8.Cum

Source Section

RncEquipment

IuAvgNbrSccpCnxPsRdnId8Max

Average number of sccp connections on Iu PS interface (RdnId8Max)

Data Source

RNC C-Node

Source Field

VS.IuAvgNbrSccpCnxPs.RdnId8.Max

Source Section

RncEquipment

IuAvgNbrSccpCnxPsRdnId8Min

Average number of sccp connections on Iu PS interface (RdnId8Min)

Data Source

RNC C-Node

Source Field

VS.IuAvgNbrSccpCnxPs.RdnId8.Min

Source Section

RncEquipment

IuAvgNbrSccpCnxPsRdnId8NbEvt

Average number of sccp connections on Iu PS interface (RdnId8NbEvt)

Data Source

RNC C-Node

Source Field

VS.IuAvgNbrSccpCnxPs.RdnId8.NbEvt

Source Section

RncEquipment

IuAvgNbrSccpCnxPsRdnId9Avg

Average number of sccp connections on Iu PS interface (RdnId9Avg)

Data Source

RNC C-Node

Source Field

VS.IuAvgNbrSccpCnxPs.RdnId9.Avg

Source Section

RncEquipment

IuAvgNbrSccpCnxPsRdnId9Cum

Average number of sccp connections on Iu PS interface (RdnId9Cum)

Data Source

RNC C-Node

Source Field

VS.IuAvgNbrSccpCnxPs.RdnId9.Cum

Source Section

RncEquipment

IuAvgNbrSccpCnxPsRdnId9Max

Average number of sccp connections on Iu PS interface (RdnId9Max)

Data Source

RNC C-Node

Source Field

VS.IuAvgNbrSccpCnxPs.RdnId9.Max

Source Section

RncEquipment

IuAvgNbrSccpCnxPsRdnId9Min

Average number of sccp connections on Iu PS interface (RdnId9Min)

Data Source

RNC C-Node

Source Field

VS.IuAvgNbrSccpCnxPs.RdnId9.Min

Source Section

RncEquipment

IuAvgNbrSccpCnxPsRdnId9NbEvt

Average number of sccp connections on Iu PS interface (RdnId9NbEvt)

Data Source

RNC C-Node

Source Field

VS.IuAvgNbrSccpCnxPs.RdnId9.NbEvt

Source Section

RncEquipment

IubcSabpMsgFailErrInd

Number of Incoming and outgoing SABP messages over the IuBC interface (Interface between RNC and the CBC for the Cell Broadcast Service feature) (FailErrInd)

Data Source

RNC C-Node

Source Field

VS.IubcSabpMsg.FailErrInd

Source Section

RncEquipment

IubcSabpMsgKill

Number of Incoming and outgoing SABP messages over the IuBC interface (Interface between RNC and the CBC for the Cell Broadcast Service feature) (Kill)

Data Source

RNC C-Node

Source Field

VS.IubcSabpMsg.Kill

Source Section

RncEquipment

IubcSabpMsgKillCmplt

Number of Incoming and outgoing SABP messages over the IuBC interface (Interface between RNC and the CBC for the Cell Broadcast Service feature) (KillCmplt)

Data Source

RNC C-Node

Source Field

VS.IubcSabpMsg.KillCmplt

Source Section

RncEquipment

IubcSabpMsgLoadQry

Number of Incoming and outgoing SABP messages over the IuBC interface (Interface between RNC and the CBC for the Cell Broadcast Service feature) (LoadQry)

Data Source

RNC C-Node

Source Field

VS.IubcSabpMsg.LoadQry

Source Section

RncEquipment

IubcSabpMsgLoadQryCmplt

Number of Incoming and outgoing SABP messages over the IuBC interface (Interface between RNC and the CBC for the Cell Broadcast Service feature) (LoadQryCmplt)

Data Source

RNC C-Node

Source Field

VS.IubcSabpMsg.LoadQryCmplt

Source Section

RncEquipment

IubcSabpMsgMsgStsQry

Number of Incoming and outgoing SABP messages over the IuBC interface (Interface between RNC and the CBC for the Cell Broadcast Service feature) (MsgStsQry)

Data Source

RNC C-Node

Source Field

VS.IubcSabpMsg.MsgStsQry

Source Section

RncEquipment

IubcSabpMsgMsgStsQryCmplt

Number of Incoming and outgoing SABP messages over the IuBC interface (Interface between RNC and the CBC for the Cell Broadcast Service feature) (MsgStsQryCmplt)

Data Source

RNC C-Node

Source Field

VS.IubcSabpMsg.MsgStsQryCmplt

Source Section

RncEquipment

IubcSabpMsgReset

Number of Incoming and outgoing SABP messages over the IuBC interface (Interface between RNC and the CBC for the Cell Broadcast Service feature) (Reset)

Data Source

RNC C-Node

Source Field

VS.IubcSabpMsg.Reset

Source Section

RncEquipment

IubcSabpMsgResetCmplt

Number of Incoming and outgoing SABP messages over the IuBC interface (Interface between RNC and the CBC for the Cell Broadcast Service feature) (ResetCmplt)

Data Source

RNC C-Node

Source Field

VS.IubcSabpMsg.ResetCmplt

Source Section

RncEquipment

IubcSabpMsgRestart

Number of Incoming and outgoing SABP messages over the IuBC interface (Interface between RNC and the CBC for the Cell Broadcast Service feature) (Restart)

Data Source

RNC C-Node

Source Field

VS.IubcSabpMsg.Restart

Source Section

RncEquipment

IubcSabpMsgWrtRplc

Number of Incoming and outgoing SABP messages over the IuBC interface (Interface between RNC and the CBC for the Cell Broadcast Service feature) (WrtRplc)

Data Source

RNC C-Node

Source Field

VS.IubcSabpMsg.WrtRplc

Source Section

RncEquipment

IubcSabpMsgWrtRplcCmplt

Number of Incoming and outgoing SABP messages over the IuBC interface (Interface between RNC and the CBC for the Cell Broadcast Service feature) (WrtRplcCmplt)

Data Source

RNC C-Node

Source Field

VS.IubcSabpMsg.WrtRplcCmplt

Source Section

RncEquipment

IubcSabpWrtRplcFailInvldParmDcdErr

Each time a SABP WRITE-REPLACE Failure message is sent to CBC, the number of failed SAI (FddCell) is incremented per cause of failure. (InvldParmDcdErr)

Data Source

RNC C-Node

Source Field

VS.IubcSabpWrtRplcFail.InvldParmDcdErr

Source Section

RncEquipment

IubcSabpWrtRplcFailMsgNotCmptRcvrSt

Each time a SABP WRITE-REPLACE Failure message is sent to CBC, the number of failed SAI (FddCell) is incremented per cause of failure. (MsgNotCmptRcvrSt)

Data Source

RNC C-Node

Source Field

VS.IubcSabpWrtRplcFail.MsgNotCmptRcvrSt

Source Section

RncEquipment

IubcSabpWrtRplcFailMsgRfAlrdyUsd

Each time a SABP WRITE-REPLACE Failure message is sent to CBC, the number of failed SAI (FddCell) is incremented per cause of failure. (MsgRfAlrdyUsd)

Data Source

RNC C-Node

Source Field

VS.IubcSabpWrtRplcFail.MsgRfAlrdyUsd

Source Section

RncEquipment

IubcSabpWrtRplcFailRncCapMemXcd

Each time a SABP WRITE-REPLACE Failure message is sent to CBC, the number of failed SAI (FddCell) is incremented per cause of failure. (RncCapMemXcd)

Data Source

RNC C-Node

Source Field

VS.IubcSabpWrtRplcFail.RncCapMemXcd

Source Section

RncEquipment

IubcSabpWrtRplcFailSrvcArBcNotOpr

Each time a SABP WRITE-REPLACE Failure message is sent to CBC, the number of failed SAI (FddCell) is incremented per cause of failure. (SrvcArBcNotOpr)

Data Source

RNC C-Node

Source Field

VS.IubcSabpWrtRplcFail.SrvcArBcNotOpr

Source Section

RncEquipment

IubcSabpWrtRplcFailSrvcArBcNotSup

Each time a SABP WRITE-REPLACE Failure message is sent to CBC, the number of failed SAI (FddCell) is incremented per cause of failure. (SrvcArBcNotSup)

Data Source

RNC C-Node

Source Field

VS.IubcSabpWrtRplcFail.SrvcArBcNotSup

Source Section

RncEquipment

IubcSabpWrtRplcFailSrvcArIdNotVld

Each time a SABP WRITE-REPLACE Failure message is sent to CBC, the number of failed SAI (FddCell) is incremented per cause of failure. (SrvcArIdNotVld)

Data Source

RNC C-Node

Source Field

VS.IubcSabpWrtRplcFail.SrvcArIdNotVld

Source Section

RncEquipment

IubcSabpWrtRplcFailVldCnMsgNotId

Each time a SABP WRITE-REPLACE Failure message is sent to CBC, the number of failed SAI (FddCell) is incremented per cause of failure. (VldCnMsgNotId)

Data Source

RNC C-Node

Source Field

VS.IubcSabpWrtRplcFail.VldCnMsgNotId

Source Section

RncEquipment

IuCsTimingAdjustmentAcksRabCsConv12_2

Number of Iu CS Timing Adjustment acknowledgements received from the CS Core Network (RabCsConv12_2)

Data Source

RNC C-Node

Source Field

VS.IuCsTimingAdjustmentAcks.RabCsConv12_2

Source Section

RncEquipment

IuCsTimingAdjustmentAcksRabCsConv64

Number of Iu CS Timing Adjustment acknowledgements received from the CS Core Network (RabCsConv64)

Data Source

RNC C-Node

Source Field

VS.IuCsTimingAdjustmentAcks.RabCsConv64

Source Section

RncEquipment

IuCsTimingAdjustmentAcksRabCsOther

Number of Iu CS Timing Adjustment acknowledgements received from the CS Core Network (RabCsOther)

Data Source

RNC C-Node

Source Field

VS.IuCsTimingAdjustmentAcks.RabCsOther

Source Section

RncEquipment

IuCsTimingAdjustmentAcksRabCsStr14_4

Number of Iu CS Timing Adjustment acknowledgements received from the CS Core Network (RabCsStr14_4)

Data Source

RNC C-Node

Source Field

VS.IuCsTimingAdjustmentAcks.RabCsStr14_4

Source Section

RncEquipment

IuCsTimingAdjustmentAcksRabCsStr57_6

Number of Iu CS Timing Adjustment acknowledgements received from the CS Core Network (RabCsStr57_6)

Data Source

RNC C-Node

Source Field

VS.IuCsTimingAdjustmentAcks.RabCsStr57_6

Source Section

RncEquipment

IuCsTimingAdjustmentNacksRabCsConv12_2

Number of Iu CS Timing Adjustment nacks received from the CS Core Network (RabCsConv12_2)

Data Source

RNC C-Node

Source Field

VS.IuCsTimingAdjustmentNacks.RabCsConv12_2

Source Section

RncEquipment

IuCsTimingAdjustmentNacksRabCsConv64

Number of Iu CS Timing Adjustment nacks received from the CS Core Network (RabCsConv64)

Data Source

RNC C-Node

Source Field

VS.IuCsTimingAdjustmentNacks.RabCsConv64

Source Section

RncEquipment

IuCsTimingAdjustmentNacksRabCsOther

Number of Iu CS Timing Adjustment nacks received from the CS Core Network (RabCsOther)

Data Source

RNC C-Node

Source Field

VS.IuCsTimingAdjustmentNacks.RabCsOther

Source Section

RncEquipment

IuCsTimingAdjustmentNacksRabCsStr14_4

Number of Iu CS Timing Adjustment nacks received from the CS Core Network (RabCsStr14_4)

Data Source

RNC C-Node

Source Field

VS.IuCsTimingAdjustmentNacks.RabCsStr14_4

Source Section

RncEquipment

IuCsTimingAdjustmentNacksRabCsStr57_6

Number of Iu CS Timing Adjustment nacks received from the CS Core Network (RabCsStr57_6)

Data Source

RNC C-Node

Source Field

VS.IuCsTimingAdjustmentNacks.RabCsStr57_6

Source Section

RncEquipment

IuCsTimingAdjustmentRequestsRabCsConv12_2

Number of Iu CS Timing Adjustment requests sent to the CS Core Network (RabCsConv12_2)

Data Source

RNC C-Node

Source Field

VS.IuCsTimingAdjustmentRequests.RabCsConv12_2

Source Section

RncEquipment

IuCsTimingAdjustmentRequestsRabCsConv64

Number of Iu CS Timing Adjustment requests sent to the CS Core Network (RabCsConv64)

Data Source

RNC C-Node

Source Field

VS.IuCsTimingAdjustmentRequests.RabCsConv64

Source Section

RncEquipment

IuCsTimingAdjustmentRequestsRabCsOther

Number of Iu CS Timing Adjustment requests sent to the CS Core Network (RabCsOther)

Data Source

RNC C-Node

Source Field

VS.IuCsTimingAdjustmentRequests.RabCsOther

Source Section

RncEquipment

IuCsTimingAdjustmentRequestsRabCsStr14_4

Number of Iu CS Timing Adjustment requests sent to the CS Core Network (RabCsStr14_4)

Data Source

RNC C-Node

Source Field

VS.IuCsTimingAdjustmentRequests.RabCsStr14_4

Source Section

RncEquipment

IuCsTimingAdjustmentRequestsRabCsStr57_6

Number of Iu CS Timing Adjustment requests sent to the CS Core Network (RabCsStr57_6)

Data Source

RNC C-Node

Source Field

VS.IuCsTimingAdjustmentRequests.RabCsStr57_6

Source Section

RncEquipment

IuCsTimingAdjustmentTimeoutsRabCsConv12_2

Number of Iu CS Timing Adjustment requests that timed out before receiving esponse from the CS Core Network (RabCsConv12_2)

Data Source

RNC C-Node

Source Field

VS.IuCsTimingAdjustmentTimeouts.RabCsConv12_2

Source Section

RncEquipment

IuCsTimingAdjustmentTimeoutsRabCsConv64

Number of Iu CS Timing Adjustment requests that timed out before receiving esponse from the CS Core Network (RabCsConv64)

Data Source

RNC C-Node

Source Field

VS.IuCsTimingAdjustmentTimeouts.RabCsConv64

Source Section

RncEquipment

IuCsTimingAdjustmentTimeoutsRabCsOther

Number of Iu CS Timing Adjustment requests that timed out before receiving esponse from the CS Core Network (RabCsOther)

Data Source

RNC C-Node

Source Field

VS.IuCsTimingAdjustmentTimeouts.RabCsOther

Source Section

RncEquipment

IuCsTimingAdjustmentTimeoutsRabCsStr14_4

Number of Iu CS Timing Adjustment requests that timed out before receiving esponse from the CS Core Network (RabCsStr14_4)

Data Source

RNC C-Node

Source Field

VS.IuCsTimingAdjustmentTimeouts.RabCsStr14_4

Source Section

RncEquipment

IuCsTimingAdjustmentTimeoutsRabCsStr57_6

Number of Iu CS Timing Adjustment requests that timed out before receiving esponse from the CS Core Network (RabCsStr57_6)

Data Source

RNC C-Node

Source Field

VS.IuCsTimingAdjustmentTimeouts.RabCsStr57_6

Source Section

RncEquipment

IuCsTimingAdjustmentUnsupportedRabCsConv12_2

Number of Iu CS Timing Adjustment unsupported responses received from the CS Core Network. (RabCsConv12_2)

Data Source

RNC C-Node

Source Field

VS.IuCsTimingAdjustmentUnsupported.RabCsConv12_2

Source Section

RncEquipment

IuCsTimingAdjustmentUnsupportedRabCsConv64

Number of Iu CS Timing Adjustment unsupported responses received from the CS Core Network. (RabCsConv64)

Data Source

RNC C-Node

Source Field

VS.IuCsTimingAdjustmentUnsupported.RabCsConv64

Source Section

RncEquipment

IuCsTimingAdjustmentUnsupportedRabCsOther

Number of Iu CS Timing Adjustment unsupported responses received from the CS Core Network. (RabCsOther)

Data Source

RNC C-Node

Source Field

VS.IuCsTimingAdjustmentUnsupported.RabCsOther

Source Section

RncEquipment

IuCsTimingAdjustmentUnsupportedRabCsStr14_4

Number of Iu CS Timing Adjustment unsupported responses received from the CS Core Network. (RabCsStr14_4)

Data Source

RNC C-Node

Source Field

VS.IuCsTimingAdjustmentUnsupported.RabCsStr14_4

Source Section

RncEquipment

IuCsTimingAdjustmentUnsupportedRabCsStr57_6

Number of Iu CS Timing Adjustment unsupported responses received from the CS Core Network. (RabCsStr57_6)

Data Source

RNC C-Node

Source Field

VS.IuCsTimingAdjustmentUnsupported.RabCsStr57_6

Source Section

RncEquipment

IuEmittedSccpAbnormalDisconnectsCsEndUserCongestion

Number of emitted abnormal sccp disconnections (SCCP_DISC_REQ) on Iu-cs interface (EndUserCongestion)

Data Source

RNC C-Node

Source Field

VS.IuEmittedSccpAbnormalDisconnectsCs.EndUserCongestion

Source Section

RncEquipment

IuEmittedSccpAbnormalDisconnectsCsEndUserFailure

Number of emitted abnormal sccp disconnections (SCCP_DISC_REQ) on Iu-cs interface (EndUserFailure)

Data Source

RNC C-Node

Source Field

VS.IuEmittedSccpAbnormalDisconnectsCs.EndUserFailure

Source Section

RncEquipment

IuEmittedSccpAbnormalDisconnectsCsEndUserOriginated

Number of emitted abnormal sccp disconnections (SCCP_DISC_REQ) on Iu-cs interface (EndUserOriginated)

Data Source

RNC C-Node

Source Field

VS.IuEmittedSccpAbnormalDisconnectsCs.EndUserOriginated

Source Section

RncEquipment

IuEmittedSccpAbnormalDisconnectsPsEndUserCongestion

Number of emitted abnormal sccp disconnections (SCCP_DISC_REQ) on Iu-ps interface (EndUserCongestion)

Data Source

RNC C-Node

Source Field

VS.IuEmittedSccpAbnormalDisconnectsPs.EndUserCongestion

Source Section

RncEquipment

IuEmittedSccpAbnormalDisconnectsPsEndUserFailure

Number of emitted abnormal sccp disconnections (SCCP_DISC_REQ) on Iu-ps interface (EndUserFailure)

Data Source

RNC C-Node

Source Field

VS.IuEmittedSccpAbnormalDisconnectsPs.EndUserFailure

Source Section

RncEquipment

IuEmittedSccpAbnormalDisconnectsPsEndUserOriginated

Number of emitted abnormal sccp disconnections (SCCP_DISC_REQ) on Iu-ps interface (EndUserOriginated)

Data Source

RNC C-Node

Source Field

VS.IuEmittedSccpAbnormalDisconnectsPs.EndUserOriginated

Source Section

RncEquipment

IupsMbmsBcstSsnStartReq

Number of MBMS Broadcast sessions requested by the PS Core Network (IupsMbmsBcstSsnStartReq)

Data Source

RNC C-Node

Source Field

VS.IupsMbmsBcstSsnStartReq

Source Section

RncEquipment

IupsMbmsBcstSsnStartSuc

Number of MBMS Broadcast sessions successfully started over Iu (IupsMbmsBcstSsnStartSuc)

Data Source

RNC C-Node

Source Field

VS.IupsMbmsBcstSsnStartSuc

Source Section

RncEquipment

IupsMbmsBcstSsnStartUnsucNoRsrcAvail

Number of MBMS Broadcast sessions unsuccessfully started over Iu (NoRsrcAvail)

Data Source

RNC C-Node

Source Field

VS.IupsMbmsBcstSsnStartUnsuc.NoRsrcAvail

Source Section

RncEquipment

IupsMbmsBcstSsnStartUnsucOther

Number of MBMS Broadcast sessions unsuccessfully started over Iu (Other)

Data Source

RNC C-Node

Source Field

VS.IupsMbmsBcstSsnStartUnsuc.Other

Source Section

RncEquipment

IupsMbmsBcstSsnStartUnsucUnsupRabParm

Number of MBMS Broadcast sessions unsuccessfully started over Iu (UnsupRabParm)

Data Source

RNC C-Node

Source Field

VS.IupsMbmsBcstSsnStartUnsuc.UnsupRabParm

Source Section

RncEquipment

IupsMbmsEBcstSsnStartReq

Number of MBMS Enhanced Broadcast sessions requested by the PS Core Network (IupsMbmsEBcstSsnStartReq)

Data Source

RNC C-Node

Source Field

VS.IupsMbmsEBcstSsnStartReq

Source Section

RncEquipment

IupsMbmsEBcstSsnStartSuc

Number of MBMS Enhanced Broadcast sessions successfully started over Iu (IupsMbmsEBcstSsnStartSuc)

Data Source

RNC C-Node

Source Field

VS.IupsMbmsEBcstSsnStartSuc

Source Section

RncEquipment

IupsMbmsEBcstSsnStartUnsucNoRsrcAvail

Number of MBMS Enhanced Broadcast sessions unsuccessfully started over Iu (NoRsrcAvail)

Data Source

RNC C-Node

Source Field

VS.IupsMbmsEBcstSsnStartUnsuc.NoRsrcAvail

Source Section

RncEquipment

IupsMbmsEBcstSsnStartUnsucOther

Number of MBMS Enhanced Broadcast sessions unsuccessfully started over Iu (Other)

Data Source

RNC C-Node

Source Field

VS.IupsMbmsEBcstSsnStartUnsuc.Other

Source Section

RncEquipment

IupsMbmsEBcstSsnStartUnsucUnsupRabParm

Number of MBMS Enhanced Broadcast sessions unsuccessfully started over Iu (UnsupRabParm)

Data Source

RNC C-Node

Source Field

VS.IupsMbmsEBcstSsnStartUnsuc.UnsupRabParm

Source Section

RncEquipment

IuReceivedSccpAbnormalDisconnectsCs

Number of received abnormal sccp disconnections (SCCP_DISC_IND) on Iu-cs interface (IuReceivedSccpAbnormalDisconnectsCs)

Data Source

RNC C-Node

Source Field

VS.IuReceivedSccpAbnormalDisconnectsCs

Source Section

RncEquipment

IuReceivedSccpAbnormalDisconnectsPs

Number of received abnormal sccp disconnections (SCCP_DISC_IND) on Iu-ps interface (IuReceivedSccpAbnormalDisconnectsPs)

Data Source

RNC C-Node

Source Field

VS.IuReceivedSccpAbnormalDisconnectsPs

Source Section

RncEquipment

IuRelocationCancels3Gto2GCs

Number of relocation cancels at Iu interface (3Gto2GCs)

Data Source

RNC C-Node

Source Field

VS.IuRelocationCancels.3Gto2GCs

Source Section

RncEquipment

IuRelocationCancels3Gto3GCs

Number of relocation cancels at Iu interface (3Gto3GCs)

Data Source

RNC C-Node

Source Field

VS.IuRelocationCancels.3Gto3GCs

Source Section

RncEquipment

IuRelocationCancels3Gto3GPs

Number of relocation cancels at Iu interface (3Gto3GPs)

Data Source

RNC C-Node

Source Field

VS.IuRelocationCancels.3Gto3GPs

Source Section

RncEquipment

IuRelocationCmdFailuresCs3Gto2GAlreadyInProgrUeInv

Number of relocation Preparation failures on CS Iu interface (3Gto2GAlreadyInProgrUeInv)

Data Source

RNC C-Node

Source Field

VS.IuRelocationCmdFailuresCs.3Gto2GAlreadyInProgrUeInv

Source Section

RncEquipment

IuRelocationCmdFailuresCs3Gto2GFailTargetUeInv

Number of relocation Preparation failures on CS Iu interface (3Gto2GFailTargetUeInv)

Data Source

RNC C-Node

Source Field

VS.IuRelocationCmdFailuresCs.3Gto2GFailTargetUeInv

Source Section

RncEquipment

IuRelocationCmdFailuresCs3Gto2GOtherUeInv

Number of relocation Preparation failures on CS Iu interface (3Gto2GOtherUeInv)

Data Source

RNC C-Node

Source Field

VS.IuRelocationCmdFailuresCs.3Gto2GOtherUeInv

Source Section

RncEquipment

IuRelocationCmdFailuresCs3Gto2GRelocTimeoutUeInv

Number of relocation Preparation failures on CS Iu interface (3Gto2GRelocTimeoutUeInv)

Data Source

RNC C-Node

Source Field

VS.IuRelocationCmdFailuresCs.3Gto2GRelocTimeoutUeInv

Source Section

RncEquipment

IuRelocationCmdFailuresCs3Gto2GUnableToEstabUeInv

Number of relocation Preparation failures on CS Iu interface (3Gto2GUnableToEstabUeInv)

Data Source

RNC C-Node

Source Field

VS.IuRelocationCmdFailuresCs.3Gto2GUnableToEstabUeInv

Source Section

RncEquipment

IuRelocationCmdFailuresCs3Gto3GAlreadyInProgrUeInv

Number of relocation Preparation failures on CS Iu interface (3Gto3GAlreadyInProgrUeInv)

Data Source

RNC C-Node

Source Field

VS.IuRelocationCmdFailuresCs.3Gto3GAlreadyInProgrUeInv

Source Section

RncEquipment

IuRelocationCmdFailuresCs3Gto3GAlreadyInProgrUeNotInv

Number of relocation Preparation failures on CS Iu interface (3Gto3GAlreadyInProgrUeNotInv)

Data Source

RNC C-Node

Source Field

VS.IuRelocationCmdFailuresCs.3Gto3GAlreadyInProgrUeNotInv

Source Section

RncEquipment

IuRelocationCmdFailuresCs3Gto3GFailTargetUeInv

Number of relocation Preparation failures on CS Iu interface (3Gto3GFailTargetUeInv)

Data Source

RNC C-Node

Source Field

VS.IuRelocationCmdFailuresCs.3Gto3GFailTargetUeInv

Source Section

RncEquipment

IuRelocationCmdFailuresCs3Gto3GFailTargetUeNotInv

Number of relocation Preparation failures on CS Iu interface (3Gto3GFailTargetUeNotInv)

Data Source

RNC C-Node

Source Field

VS.IuRelocationCmdFailuresCs.3Gto3GFailTargetUeNotInv

Source Section

RncEquipment

IuRelocationCmdFailuresCs3Gto3GOtherUeInv

Number of relocation Preparation failures on CS Iu interface (3Gto3GOtherUeInv)

Data Source

RNC C-Node

Source Field

VS.IuRelocationCmdFailuresCs.3Gto3GOtherUeInv

Source Section

RncEquipment

IuRelocationCmdFailuresCs3Gto3GOtherUeNotInv

Number of relocation Preparation failures on CS Iu interface (3Gto3GOtherUeNotInv)

Data Source

RNC C-Node

Source Field

VS.IuRelocationCmdFailuresCs.3Gto3GOtherUeNotInv

Source Section

RncEquipment

IuRelocationCmdFailuresCs3Gto3GRelocTimeoutUeInv

Number of relocation Preparation failures on CS Iu interface (3Gto3GRelocTimeoutUeInv)

Data Source

RNC C-Node

Source Field

VS.IuRelocationCmdFailuresCs.3Gto3GRelocTimeoutUeInv

Source Section

RncEquipment

IuRelocationCmdFailuresCs3Gto3GRelocTimeoutUeNotInv

Number of relocation Preparation failures on CS Iu interface (3Gto3GRelocTimeoutUeNotInv)

Data Source

RNC C-Node

Source Field

VS.IuRelocationCmdFailuresCs.3Gto3GRelocTimeoutUeNotInv

Source Section

RncEquipment

IuRelocationCmdFailuresCs3Gto3GUnableToEstabUeInv

Number of relocation Preparation failures on CS Iu interface (3Gto3GUnableToEstabUeInv)

Data Source

RNC C-Node

Source Field

VS.IuRelocationCmdFailuresCs.3Gto3GUnableToEstabUeInv

Source Section

RncEquipment

IuRelocationCommandFailuresPsRelocAlreadyInProgressUeInv

Number of relocation Preparation failures on PS Iu interface (RelocAlreadyInProgressUeInv)

Data Source

RNC C-Node

Source Field

VS.IuRelocationCommandFailuresPs.RelocAlreadyInProgressUeInv

Source Section

RncEquipment

IuRelocationCommandFailuresPsRelocAlreadyInProgressUeNotInv

Number of relocation Preparation failures on PS Iu interface (RelocAlreadyInProgressUeNotInv)

Data Source

RNC C-Node

Source Field

VS.IuRelocationCommandFailuresPs.RelocAlreadyInProgressUeNotInv

Source Section

RncEquipment

IuRelocationCommandFailuresPsRelocFailureInTargetSystemUeInv

Number of relocation Preparation failures on PS Iu interface (RelocFailureInTargetSystemUeInv)

Data Source

RNC C-Node

Source Field

VS.IuRelocationCommandFailuresPs.RelocFailureInTargetSystemUeInv

Source Section

RncEquipment

IuRelocationCommandFailuresPsRelocFailureInTargetSystemUeNotInv

Number of relocation Preparation failures on PS Iu interface (RelocFailureInTargetSystemUeNotInv)

Data Source

RNC C-Node

Source Field

VS.IuRelocationCommandFailuresPs.RelocFailureInTargetSystemUeNotInv

Source Section

RncEquipment

IuRelocationCommandFailuresPsRelocOtherCausesUeInv

Number of relocation Preparation failures on PS Iu interface (RelocOtherCausesUeInv)

Data Source

RNC C-Node

Source Field

VS.IuRelocationCommandFailuresPs.RelocOtherCausesUeInv

Source Section

RncEquipment

IuRelocationCommandFailuresPsRelocOtherCausesUeNotInv

Number of relocation Preparation failures on PS Iu interface (RelocOtherCausesUeNotInv)

Data Source

RNC C-Node

Source Field

VS.IuRelocationCommandFailuresPs.RelocOtherCausesUeNotInv

Source Section

RncEquipment

IuRelocationCommandFailuresPsRelocTimeoutUeInv

Number of relocation Preparation failures on PS Iu interface (RelocTimeoutUeInv)

Data Source

RNC C-Node

Source Field

VS.IuRelocationCommandFailuresPs.RelocTimeoutUeInv

Source Section

RncEquipment

IuRelocationCommandFailuresPsRelocTimeoutUeNotInv

Number of relocation Preparation failures on PS Iu interface (RelocTimeoutUeNotInv)

Data Source

RNC C-Node

Source Field

VS.IuRelocationCommandFailuresPs.RelocTimeoutUeNotInv

Source Section

RncEquipment

IuRelocationCommandFailuresPsRelocUnableEstablishUeInv

Number of relocation Preparation failures on PS Iu interface (RelocUnableEstablishUeInv)

Data Source

RNC C-Node

Source Field

VS.IuRelocationCommandFailuresPs.RelocUnableEstablishUeInv

Source Section

RncEquipment

IuRelocationCommands3Gto2GCs

Number of relocation commands at Iu interface (3Gto2GCs)

Data Source

RNC C-Node

Source Field

VS.IuRelocationCommands.3Gto2GCs

Source Section

RncEquipment

IuRelocationCommands3Gto3GCs

Number of relocation commands at Iu interface (3Gto3GCs)

Data Source

RNC C-Node

Source Field

VS.IuRelocationCommands.3Gto3GCs

Source Section

RncEquipment

IuRelocationCommands3Gto3GCsUeNotInv

Number of relocation commands at Iu interface (3Gto3GCsUeNotInv)

Data Source

RNC C-Node

Source Field

VS.IuRelocationCommands.3Gto3GCsUeNotInv

Source Section

RncEquipment

IuRelocationCommands3Gto3GPs

Number of relocation commands at Iu interface (3Gto3GPs)

Data Source

RNC C-Node

Source Field

VS.IuRelocationCommands.3Gto3GPs

Source Section

RncEquipment

IuRelocationCommands3Gto3GPsUeNotInv

Number of relocation commands at Iu interface (3Gto3GPsUeNotInv)

Data Source

RNC C-Node

Source Field

VS.IuRelocationCommands.3Gto3GPsUeNotInv

Source Section

RncEquipment

IuRelocationCompletes2Gto3GCs

Number of relocation completes at Iu interface (2Gto3GCs)

Data Source

RNC C-Node

Source Field

VS.IuRelocationCompletes.2Gto3GCs

Source Section

RncEquipment

IuRelocationCompletes3Gto3GCs

Number of relocation completes at Iu interface (3Gto3GCs)

Data Source

RNC C-Node

Source Field

VS.IuRelocationCompletes.3Gto3GCs

Source Section

RncEquipment

IuRelocationCompletes3Gto3GPs

Number of relocation completes at Iu interface (3Gto3GPs)

Data Source

RNC C-Node

Source Field

VS.IuRelocationCompletes.3Gto3GPs

Source Section

RncEquipment

IuRelocationDetects2Gto3GCs

Number of relocation detects at Iu interface (2Gto3GCs)

Data Source

RNC C-Node

Source Field

VS.IuRelocationDetects.2Gto3GCs

Source Section

RncEquipment

IuRelocationDetects3Gto3GCs

Number of relocation detects at Iu interface (3Gto3GCs)

Data Source

RNC C-Node

Source Field

VS.IuRelocationDetects.3Gto3GCs

Source Section

RncEquipment

IuRelocationDetects3Gto3GPs

Number of relocation detects at Iu interface (3Gto3GPs)

Data Source

RNC C-Node

Source Field

VS.IuRelocationDetects.3Gto3GPs

Source Section

RncEquipment

IuRelocationRequired3Gto2GCs

Number of relocation required at Iu interface (3Gto2GCs)

Data Source

RNC C-Node

Source Field

VS.IuRelocationRequired.3Gto2GCs

Source Section

RncEquipment

IuRelocationRequired3Gto3GCs

Number of relocation required at Iu interface (3Gto3GCs)

Data Source

RNC C-Node

Source Field

VS.IuRelocationRequired.3Gto3GCs

Source Section

RncEquipment

IuRelocationRequired3Gto3GCsUeNotInv

Number of relocation required at Iu interface (3Gto3GCsUeNotInv)

Data Source

RNC C-Node

Source Field

VS.IuRelocationRequired.3Gto3GCsUeNotInv

Source Section

RncEquipment

IuRelocationRequired3Gto3GPs

Number of relocation required at Iu interface (3Gto3GPs)

Data Source

RNC C-Node

Source Field

VS.IuRelocationRequired.3Gto3GPs

Source Section

RncEquipment

IuRelocationRequired3Gto3GPsUeNotInv

Number of relocation required at Iu interface (3Gto3GPsUeNotInv)

Data Source

RNC C-Node

Source Field

VS.IuRelocationRequired.3Gto3GPsUeNotInv

Source Section

RncEquipment

IuSccpCnxSuccessCsReqByCN

Number of successful sccp connection at Iu interface (CsReqByCN)

Data Source

RNC C-Node

Source Field

VS.IuSccpCnxSuccess.CsReqByCN

Source Section

RncEquipment

IuSccpCnxSuccessCsReqByRNC

Number of successful sccp connection at Iu interface (CsReqByRNC)

Data Source

RNC C-Node

Source Field

VS.IuSccpCnxSuccess.CsReqByRNC

Source Section

RncEquipment

IuSccpCnxSuccessPsReqByCN

Number of successful sccp connection at Iu interface (PsReqByCN)

Data Source

RNC C-Node

Source Field

VS.IuSccpCnxSuccess.PsReqByCN

Source Section

RncEquipment

IuSccpCnxSuccessPsReqByRNC

Number of successful sccp connection at Iu interface (PsReqByRNC)

Data Source

RNC C-Node

Source Field

VS.IuSccpCnxSuccess.PsReqByRNC

Source Section

RncEquipment

IuSccpCnxUnsuccessFailIucsConnectionReqByCoreNetworkCs

Number of unsuccessful sccp connection at Iu interface (FailIucsConnectionReqByCoreNetworkCs)

Data Source

RNC C-Node

Source Field

VS.IuSccpCnxUnsuccess.FailIucsConnectionReqByCoreNetworkCs

Source Section

RncEquipment

IuSccpCnxUnsuccessFailIucsConnectionReqByRnc

Number of unsuccessful sccp connection at Iu interface (FailIucsConnectionReqByRnc)

Data Source

RNC C-Node

Source Field

VS.IuSccpCnxUnsuccess.FailIucsConnectionReqByRnc

Source Section

RncEquipment

IuSccpCnxUnsuccessFailIupsConnectionReqByCoreNetworkPs

Number of unsuccessful sccp connection at Iu interface (FailIupsConnectionReqByCoreNetworkPs)

Data Source

RNC C-Node

Source Field

VS.IuSccpCnxUnsuccess.FailIupsConnectionReqByCoreNetworkPs

Source Section

RncEquipment

IuSccpCnxUnsuccessFailIupsConnectionReqByRnc

Number of unsuccessful sccp connection at Iu interface (FailIupsConnectionReqByRnc)

Data Source

RNC C-Node

Source Field

VS.IuSccpCnxUnsuccess.FailIupsConnectionReqByRnc

Source Section

RncEquipment

mcc

Mobile Country Code, MCC. It is a part of the PLMN Id (Ref. 3GPP TS 23.003).

Data Source

OMC-U Bulk CM

Source Field

un:mcc

Source Section

RncFunction

MM_PagAttDiscard_ProcessorLoad

Number of Paging Attempts discarded by RNC due to processor load

Data Source

RNC

Source Field

VS.MM.PagAttDiscard.ProcessorLoad

Source Section

Paging, Cell and URA Update

MM_PagAttRec

Number of Paging Attempts received by RNC

Data Source

RNC

Source Field

VS.MM.PagAttRec

Source Section

Paging, Cell and URA Update

MM_RRCConnDrop_Period_UraUpdate

Number of Dropped RRC Connections due to Failed Periodical URA Update

Data Source

RNC

Source Field

VS.MM.RRCConnDrop.Period_UraUpdate

Source Section

Paging, Cell and URA Update

MM_RRCConnDrop_UTRANPagingFailure

Number of Dropped RRC Connections due to UTRAN Paging Failure

Data Source

RNC

Source Field

VS.MM.RRCConnDrop.UTRANPagingFailure

Source Section

Paging, Cell and URA Update

mnc

Mobile Network Code, MNC. It is a part of the PLMN Id (Ref. 3GPP TS 23.003).

Data Source

OMC-U Bulk CM

Source Field

un:mnc

Source Section

RncFunction

NumberOfRabEstablishedGrantedRabCsConv64Avg

The average number of RAB established per Rab Type. This counter should also be incremented/decremented every time a RAB is allocated for an incoming relocation call or released for outgoing relocation call. (Avg)

Data Source

RNC C-Node

Source Field

VS.NumberOfRabEstablished.GrantedRabCsConv64.Avg

Source Section

RncEquipment

NumberOfRabEstablishedGrantedRabCsConv64Cum

The average number of RAB established per Rab Type. This counter should also be incremented/decremented every time a RAB is allocated for an incoming relocation call or released for outgoing relocation call. (Cum)

Data Source

RNC C-Node

Source Field

VS.NumberOfRabEstablished.GrantedRabCsConv64.Cum

Source Section

RncEquipment

NumberOfRabEstablishedGrantedRabCsConv64Max

The average number of RAB established per Rab Type. This counter should also be incremented/decremented every time a RAB is allocated for an incoming relocation call or released for outgoing relocation call. (Max)

Data Source

RNC C-Node

Source Field

VS.NumberOfRabEstablished.GrantedRabCsConv64.Max

Source Section

RncEquipment

NumberOfRabEstablishedGrantedRabCsConv64Min

The average number of RAB established per Rab Type. This counter should also be incremented/decremented every time a RAB is allocated for an incoming relocation call or released for outgoing relocation call. (Min)

Data Source

RNC C-Node

Source Field

VS.NumberOfRabEstablished.GrantedRabCsConv64.Min

Source Section

RncEquipment

NumberOfRabEstablishedGrantedRabCsConv64NbEvt

The average number of RAB established per Rab Type. This counter should also be incremented/decremented every time a RAB is allocated for an incoming relocation call or released for outgoing relocation call. (NbEvt)

Data Source

RNC C-Node

Source Field

VS.NumberOfRabEstablished.GrantedRabCsConv64.NbEvt

Source Section

RncEquipment

NumberOfRabEstablishedGrantedRabCSSpeechConvAvg

The average number of RAB established per Rab Type. This counter should also be incremented/decremented every time a RAB is allocated for an incoming relocation call or released for outgoing relocation call. (Avg)

Data Source

RNC C-Node

Source Field

VS.NumberOfRabEstablished.GrantedRabCSSpeechConv.Avg

Source Section

RncEquipment

NumberOfRabEstablishedGrantedRabCSSpeechConvCum

The average number of RAB established per Rab Type. This counter should also be incremented/decremented every time a RAB is allocated for an incoming relocation call or released for outgoing relocation call. (Cum)

Data Source

RNC C-Node

Source Field

VS.NumberOfRabEstablished.GrantedRabCSSpeechConv.Cum

Source Section

RncEquipment

NumberOfRabEstablishedGrantedRabCSSpeechConvMax

The average number of RAB established per Rab Type. This counter should also be incremented/decremented every time a RAB is allocated for an incoming relocation call or released for outgoing relocation call. (Max)

Data Source

RNC C-Node

Source Field

VS.NumberOfRabEstablished.GrantedRabCSSpeechConv.Max

Source Section

RncEquipment

NumberOfRabEstablishedGrantedRabCSSpeechConvMin

The average number of RAB established per Rab Type. This counter should also be incremented/decremented every time a RAB is allocated for an incoming relocation call or released for outgoing relocation call. (Min)

Data Source

RNC C-Node

Source Field

VS.NumberOfRabEstablished.GrantedRabCSSpeechConv.Min

Source Section

RncEquipment

NumberOfRabEstablishedGrantedRabCSSpeechConvNbEvt

The average number of RAB established per Rab Type. This counter should also be incremented/decremented every time a RAB is allocated for an incoming relocation call or released for outgoing relocation call. (NbEvt)

Data Source

RNC C-Node

Source Field

VS.NumberOfRabEstablished.GrantedRabCSSpeechConv.NbEvt

Source Section

RncEquipment

NumberOfRabEstablishedGrantedRabCsStrAvg

The average number of RAB established per Rab Type. This counter should also be incremented/decremented every time a RAB is allocated for an incoming relocation call or released for outgoing relocation call. (Avg)

Data Source

RNC C-Node

Source Field

VS.NumberOfRabEstablished.GrantedRabCsStr.Avg

Source Section

RncEquipment

NumberOfRabEstablishedGrantedRabCsStrCum

The average number of RAB established per Rab Type. This counter should also be incremented/decremented every time a RAB is allocated for an incoming relocation call or released for outgoing relocation call. (Cum)

Data Source

RNC C-Node

Source Field

VS.NumberOfRabEstablished.GrantedRabCsStr.Cum

Source Section

RncEquipment

NumberOfRabEstablishedGrantedRabCsStrMax

The average number of RAB established per Rab Type. This counter should also be incremented/decremented every time a RAB is allocated for an incoming relocation call or released for outgoing relocation call. (Max)

Data Source

RNC C-Node

Source Field

VS.NumberOfRabEstablished.GrantedRabCsStr.Max

Source Section

RncEquipment

NumberOfRabEstablishedGrantedRabCsStrMin

The average number of RAB established per Rab Type. This counter should also be incremented/decremented every time a RAB is allocated for an incoming relocation call or released for outgoing relocation call. (Min)

Data Source

RNC C-Node

Source Field

VS.NumberOfRabEstablished.GrantedRabCsStr.Min

Source Section

RncEquipment

NumberOfRabEstablishedGrantedRabCsStrNbEvt

The average number of RAB established per Rab Type. This counter should also be incremented/decremented every time a RAB is allocated for an incoming relocation call or released for outgoing relocation call. (NbEvt)

Data Source

RNC C-Node

Source Field

VS.NumberOfRabEstablished.GrantedRabCsStr.NbEvt

Source Section

RncEquipment

NumberOfRabEstablishedGrantedRabOtherAvg

The average number of RAB established per Rab Type. This counter should also be incremented/decremented every time a RAB is allocated for an incoming relocation call or released for outgoing relocation call. (Avg)

Data Source

RNC C-Node

Source Field

VS.NumberOfRabEstablished.GrantedRabOther.Avg

Source Section

RncEquipment

NumberOfRabEstablishedGrantedRabOtherCum

The average number of RAB established per Rab Type. This counter should also be incremented/decremented every time a RAB is allocated for an incoming relocation call or released for outgoing relocation call. (Cum)

Data Source

RNC C-Node

Source Field

VS.NumberOfRabEstablished.GrantedRabOther.Cum

Source Section

RncEquipment

NumberOfRabEstablishedGrantedRabOtherMax

The average number of RAB established per Rab Type. This counter should also be incremented/decremented every time a RAB is allocated for an incoming relocation call or released for outgoing relocation call. (Max)

Data Source

RNC C-Node

Source Field

VS.NumberOfRabEstablished.GrantedRabOther.Max

Source Section

RncEquipment

NumberOfRabEstablishedGrantedRabOtherMin

The average number of RAB established per Rab Type. This counter should also be incremented/decremented every time a RAB is allocated for an incoming relocation call or released for outgoing relocation call. (Min)

Data Source

RNC C-Node

Source Field

VS.NumberOfRabEstablished.GrantedRabOther.Min

Source Section

RncEquipment

NumberOfRabEstablishedGrantedRabOtherNbEvt

The average number of RAB established per Rab Type. This counter should also be incremented/decremented every time a RAB is allocated for an incoming relocation call or released for outgoing relocation call. (NbEvt)

Data Source

RNC C-Node

Source Field

VS.NumberOfRabEstablished.GrantedRabOther.NbEvt

Source Section

RncEquipment

NumberOfRabEstablishedGrantedRabPsHighRateBgndAvg

The average number of RAB established per Rab Type. This counter should also be incremented/decremented every time a RAB is allocated for an incoming relocation call or released for outgoing relocation call. (Avg)

Data Source

RNC C-Node

Source Field

VS.NumberOfRabEstablished.GrantedRabPsHighRateBgnd.Avg

Source Section

RncEquipment

NumberOfRabEstablishedGrantedRabPsHighRateBgndCum

The average number of RAB established per Rab Type. This counter should also be incremented/decremented every time a RAB is allocated for an incoming relocation call or released for outgoing relocation call. (Cum)

Data Source

RNC C-Node

Source Field

VS.NumberOfRabEstablished.GrantedRabPsHighRateBgnd.Cum

Source Section

RncEquipment

NumberOfRabEstablishedGrantedRabPsHighRateBgndMax

The average number of RAB established per Rab Type. This counter should also be incremented/decremented every time a RAB is allocated for an incoming relocation call or released for outgoing relocation call. (Max)

Data Source

RNC C-Node

Source Field

VS.NumberOfRabEstablished.GrantedRabPsHighRateBgnd.Max

Source Section

RncEquipment

NumberOfRabEstablishedGrantedRabPsHighRateBgndMin

The average number of RAB established per Rab Type. This counter should also be incremented/decremented every time a RAB is allocated for an incoming relocation call or released for outgoing relocation call. (Min)

Data Source

RNC C-Node

Source Field

VS.NumberOfRabEstablished.GrantedRabPsHighRateBgnd.Min

Source Section

RncEquipment

NumberOfRabEstablishedGrantedRabPsHighRateBgndNbEvt

The average number of RAB established per Rab Type. This counter should also be incremented/decremented every time a RAB is allocated for an incoming relocation call or released for outgoing relocation call. (NbEvt)

Data Source

RNC C-Node

Source Field

VS.NumberOfRabEstablished.GrantedRabPsHighRateBgnd.NbEvt

Source Section

RncEquipment

NumberOfRabEstablishedGrantedRabPsHighRateInterAvg

The average number of RAB established per Rab Type. This counter should also be incremented/decremented every time a RAB is allocated for an incoming relocation call or released for outgoing relocation call. (Avg)

Data Source

RNC C-Node

Source Field

VS.NumberOfRabEstablished.GrantedRabPsHighRateInter.Avg

Source Section

RncEquipment

NumberOfRabEstablishedGrantedRabPsHighRateInterCum

The average number of RAB established per Rab Type. This counter should also be incremented/decremented every time a RAB is allocated for an incoming relocation call or released for outgoing relocation call. (Cum)

Data Source

RNC C-Node

Source Field

VS.NumberOfRabEstablished.GrantedRabPsHighRateInter.Cum

Source Section

RncEquipment

NumberOfRabEstablishedGrantedRabPsHighRateInterMax

The average number of RAB established per Rab Type. This counter should also be incremented/decremented every time a RAB is allocated for an incoming relocation call or released for outgoing relocation call. (Max)

Data Source

RNC C-Node

Source Field

VS.NumberOfRabEstablished.GrantedRabPsHighRateInter.Max

Source Section

RncEquipment

NumberOfRabEstablishedGrantedRabPsHighRateInterMin

The average number of RAB established per Rab Type. This counter should also be incremented/decremented every time a RAB is allocated for an incoming relocation call or released for outgoing relocation call. (Min)

Data Source

RNC C-Node

Source Field

VS.NumberOfRabEstablished.GrantedRabPsHighRateInter.Min

Source Section

RncEquipment

NumberOfRabEstablishedGrantedRabPsHighRateInterNbEvt

The average number of RAB established per Rab Type. This counter should also be incremented/decremented every time a RAB is allocated for an incoming relocation call or released for outgoing relocation call. (NbEvt)

Data Source

RNC C-Node

Source Field

VS.NumberOfRabEstablished.GrantedRabPsHighRateInter.NbEvt

Source Section

RncEquipment

NumberOfRabEstablishedGrantedRabPsLowRateBgndAvg

The average number of RAB established per Rab Type. This counter should also be incremented/decremented every time a RAB is allocated for an incoming relocation call or released for outgoing relocation call. (Avg)

Data Source

RNC C-Node

Source Field

VS.NumberOfRabEstablished.GrantedRabPsLowRateBgnd.Avg

Source Section

RncEquipment

NumberOfRabEstablishedGrantedRabPsLowRateBgndCum

The average number of RAB established per Rab Type. This counter should also be incremented/decremented every time a RAB is allocated for an incoming relocation call or released for outgoing relocation call. (Cum)

Data Source

RNC C-Node

Source Field

VS.NumberOfRabEstablished.GrantedRabPsLowRateBgnd.Cum

Source Section

RncEquipment

NumberOfRabEstablishedGrantedRabPsLowRateBgndMax

The average number of RAB established per Rab Type. This counter should also be incremented/decremented every time a RAB is allocated for an incoming relocation call or released for outgoing relocation call. (Max)

Data Source

RNC C-Node

Source Field

VS.NumberOfRabEstablished.GrantedRabPsLowRateBgnd.Max

Source Section

RncEquipment

NumberOfRabEstablishedGrantedRabPsLowRateBgndMin

The average number of RAB established per Rab Type. This counter should also be incremented/decremented every time a RAB is allocated for an incoming relocation call or released for outgoing relocation call. (Min)

Data Source

RNC C-Node

Source Field

VS.NumberOfRabEstablished.GrantedRabPsLowRateBgnd.Min

Source Section

RncEquipment

NumberOfRabEstablishedGrantedRabPsLowRateBgndNbEvt

The average number of RAB established per Rab Type. This counter should also be incremented/decremented every time a RAB is allocated for an incoming relocation call or released for outgoing relocation call. (NbEvt)

Data Source

RNC C-Node

Source Field

VS.NumberOfRabEstablished.GrantedRabPsLowRateBgnd.NbEvt

Source Section

RncEquipment

NumberOfRabEstablishedGrantedRabPsLowRateInterAvg

The average number of RAB established per Rab Type. This counter should also be incremented/decremented every time a RAB is allocated for an incoming relocation call or released for outgoing relocation call. (Avg)

Data Source

RNC C-Node

Source Field

VS.NumberOfRabEstablished.GrantedRabPsLowRateInter.Avg

Source Section

RncEquipment

NumberOfRabEstablishedGrantedRabPsLowRateInterCum

The average number of RAB established per Rab Type. This counter should also be incremented/decremented every time a RAB is allocated for an incoming relocation call or released for outgoing relocation call. (Cum)

Data Source

RNC C-Node

Source Field

VS.NumberOfRabEstablished.GrantedRabPsLowRateInter.Cum

Source Section

RncEquipment

NumberOfRabEstablishedGrantedRabPsLowRateInterMax

The average number of RAB established per Rab Type. This counter should also be incremented/decremented every time a RAB is allocated for an incoming relocation call or released for outgoing relocation call. (Max)

Data Source

RNC C-Node

Source Field

VS.NumberOfRabEstablished.GrantedRabPsLowRateInter.Max

Source Section

RncEquipment

NumberOfRabEstablishedGrantedRabPsLowRateInterMin

The average number of RAB established per Rab Type. This counter should also be incremented/decremented every time a RAB is allocated for an incoming relocation call or released for outgoing relocation call. (Min)

Data Source

RNC C-Node

Source Field

VS.NumberOfRabEstablished.GrantedRabPsLowRateInter.Min

Source Section

RncEquipment

NumberOfRabEstablishedGrantedRabPsLowRateInterNbEvt

The average number of RAB established per Rab Type. This counter should also be incremented/decremented every time a RAB is allocated for an incoming relocation call or released for outgoing relocation call. (NbEvt)

Data Source

RNC C-Node

Source Field

VS.NumberOfRabEstablished.GrantedRabPsLowRateInter.NbEvt

Source Section

RncEquipment

NumberOfRabEstablishedGrantedRabPsStrHiRateStrAvg

The average number of RAB established per Rab Type. This counter should also be incremented/decremented every time a RAB is allocated for an incoming relocation call or released for outgoing relocation call. (Avg)

Data Source

RNC C-Node

Source Field

VS.NumberOfRabEstablished.GrantedRabPsStrHiRateStr.Avg

Source Section

RncEquipment

NumberOfRabEstablishedGrantedRabPsStrHiRateStrCum

The average number of RAB established per Rab Type. This counter should also be incremented/decremented every time a RAB is allocated for an incoming relocation call or released for outgoing relocation call. (Cum)

Data Source

RNC C-Node

Source Field

VS.NumberOfRabEstablished.GrantedRabPsStrHiRateStr.Cum

Source Section

RncEquipment

NumberOfRabEstablishedGrantedRabPsStrHiRateStrMax

The average number of RAB established per Rab Type. This counter should also be incremented/decremented every time a RAB is allocated for an incoming relocation call or released for outgoing relocation call. (Max)

Data Source

RNC C-Node

Source Field

VS.NumberOfRabEstablished.GrantedRabPsStrHiRateStr.Max

Source Section

RncEquipment

NumberOfRabEstablishedGrantedRabPsStrHiRateStrMin

The average number of RAB established per Rab Type. This counter should also be incremented/decremented every time a RAB is allocated for an incoming relocation call or released for outgoing relocation call. (Min)

Data Source

RNC C-Node

Source Field

VS.NumberOfRabEstablished.GrantedRabPsStrHiRateStr.Min

Source Section

RncEquipment

NumberOfRabEstablishedGrantedRabPsStrHiRateStrNbEvt

The average number of RAB established per Rab Type. This counter should also be incremented/decremented every time a RAB is allocated for an incoming relocation call or released for outgoing relocation call. (NbEvt)

Data Source

RNC C-Node

Source Field

VS.NumberOfRabEstablished.GrantedRabPsStrHiRateStr.NbEvt

Source Section

RncEquipment

NumberOfRabEstablishedGrantedRabPsStrLowRateStrAvg

The average number of RAB established per Rab Type. This counter should also be incremented/decremented every time a RAB is allocated for an incoming relocation call or released for outgoing relocation call. (Avg)

Data Source

RNC C-Node

Source Field

VS.NumberOfRabEstablished.GrantedRabPsStrLowRateStr.Avg

Source Section

RncEquipment

NumberOfRabEstablishedGrantedRabPsStrLowRateStrCum

The average number of RAB established per Rab Type. This counter should also be incremented/decremented every time a RAB is allocated for an incoming relocation call or released for outgoing relocation call. (Cum)

Data Source

RNC C-Node

Source Field

VS.NumberOfRabEstablished.GrantedRabPsStrLowRateStr.Cum

Source Section

RncEquipment

NumberOfRabEstablishedGrantedRabPsStrLowRateStrMax

The average number of RAB established per Rab Type. This counter should also be incremented/decremented every time a RAB is allocated for an incoming relocation call or released for outgoing relocation call. (Max)

Data Source

RNC C-Node

Source Field

VS.NumberOfRabEstablished.GrantedRabPsStrLowRateStr.Max

Source Section

RncEquipment

NumberOfRabEstablishedGrantedRabPsStrLowRateStrMin

The average number of RAB established per Rab Type. This counter should also be incremented/decremented every time a RAB is allocated for an incoming relocation call or released for outgoing relocation call. (Min)

Data Source

RNC C-Node

Source Field

VS.NumberOfRabEstablished.GrantedRabPsStrLowRateStr.Min

Source Section

RncEquipment

NumberOfRabEstablishedGrantedRabPsStrLowRateStrNbEvt

The average number of RAB established per Rab Type. This counter should also be incremented/decremented every time a RAB is allocated for an incoming relocation call or released for outgoing relocation call. (NbEvt)

Data Source

RNC C-Node

Source Field

VS.NumberOfRabEstablished.GrantedRabPsStrLowRateStr.NbEvt

Source Section

RncEquipment

NumGPSPosAttCS

Number of GPS positioning procedures started due to CS request

Data Source

RNC

Source Field

NumGPSPosAttCS

Source Section

Handover Matrix Counter for Soft/Softer Handover

NumGPSPosFailCS_SanCheck

Number of failed GPS positioning sanity checks

Data Source

RNC

Source Field

NumGPSPosFailCS.SanCheck

Source Section

Handover Matrix Counter for Soft/Softer Handover

NumGPSPosSuccCS

Number of successful GPS positioning results to CS

Data Source

RNC

Source Field

NumGPSPosSuccCS

Source Section

Handover Matrix Counter for Soft/Softer Handover

NumLocAttCS

Total Number of location attempts started by CS

Data Source

RNC

Source Field

NumLocAttCS

Source Section

Handover Matrix Counter for Soft/Softer Handover

NumLocAttPS

Total Number of location attempts started by PS

Data Source

RNC

Source Field

NumLocAttPS

Source Section

Handover Matrix Counter for Soft/Softer Handover

NumRBReconfAtt_CM

Number of Attempted RB reconfigurations due to Compressed Mode

Data Source

RNC

Source Field

NumRBReconfAtt.CM

Source Section

Compressed Mode

NumTransBlockErrUL

Number of Errored Uplink Transport Blocks

Data Source

RNC

Source Field

NumTransBlockErrUL

Source Section

Handover Matrix Counter for Soft/Softer Handover

NumTransBlockErrUL_CSV

Number of Errored Uplink Transport Blocks for CSV

Data Source

RNC

Source Field

NumTransBlockErrUL.CSV

Source Section

Handover Matrix Counter for Soft/Softer Handover

NumTransBlockTotUL

Total Number of Uplink Transport Blocks

Data Source

RNC

Source Field

NumTransBlockTotUL

Source Section

Handover Matrix Counter for Soft/Softer Handover

NumTransBlockTotUL_CSV

Total Number of Uplink Transport Blocks for CSV. (Sum aggregation.)

Data Source

RNC

Source Field

NumTransBlockTotUL.CSV

Source Section

Handover Matrix Counter for Soft/Softer Handover

NumTransBlockTotUL_CSV_Avg

Total Number of Uplink Transport Blocks for CSV. This peg provides Average aggregation for the NumTransBlockTotUL.CSV measurement.

Data Source

RNC

Source Field

NumTransBlockTotUL.CSV

Source Section

Handover Matrix Counter for Soft/Softer Handover

NumTransBlockTotUL_CSV_Max

Total Number of Uplink Transport Blocks for CSV. This peg provides Maximum aggregation for the NumTransBlockTotUL.CSV measurement.

Data Source

RNC

Source Field

NumTransBlockTotUL.CSV

Source Section

Handover Matrix Counter for Soft/Softer Handover

NumTransBlockTotUL_CSV_SumMax

Total Number of Uplink Transport Blocks for CSV. This peg provides Sum across time and Maximum across elements aggregation for the NumTransBlockTotUL.CSV measurement.

Data Source

RNC

Source Field

NumTransBlockTotUL.CSV

Source Section

Handover Matrix Counter for Soft/Softer Handover

NumUserBits_PS128DL

Succeeded by:DataRate_PS128DL. Number of Downlink User Bits for PS DL 128 kbps Data Rate

Data Source

RNC

Source Field

NumUserBits.PS128DL

Source Section

Handover Matrix Counter for Soft/Softer Handover

NumUserBits_PS128UL

Succeeded by:DataRate_PS128UL. Number of Uplink User Bits for PS UL 128kpbs Data Rate

Data Source

RNC

Source Field

NumUserBits.PS128UL

Source Section

Handover Matrix Counter for Soft/Softer Handover

NumUserBits_PS32DL

Succeeded by:DataRate_PS32DL. Number of Downlink User Bits for PS DL 32 kbps Data Rate

Data Source

RNC

Source Field

NumUserBits.PS32DL

Source Section

Handover Matrix Counter for Soft/Softer Handover

NumUserBits_PS32UL

Succeeded by:DataRate_PS32UL. Number of Uplink User Bits for PS UL 32 kbps Data Rate

Data Source

RNC

Source Field

NumUserBits.PS32UL

Source Section

Handover Matrix Counter for Soft/Softer Handover

NumUserBits_PS384DL

Succeeded by:DataRate_PS384DL. Number of Downlink User Bits for PS DL 384 kbps Data Rate

Data Source

RNC

Source Field

NumUserBits.PS384DL

Source Section

Handover Matrix Counter for Soft/Softer Handover

NumUserBits_PS64DL

Succeeded by:DataRate_PS64DL. Number of Downlink User Bits for PS DL 64 kbps Data Rate. (Sum aggregation.)

Data Source

RNC

Source Field

NumUserBits.PS64DL

Source Section

Handover Matrix Counter for Soft/Softer Handover

NumUserBits_PS64DL_Avg

Succeeded by:DataRate_PS64DL_Avg. Number of Downlink User Bits for PS DL 64 kbps Data Rate. This peg provides Average aggregation for the NumUserBits.PS64DL measurement.

Data Source

RNC

Source Field

NumUserBits.PS64DL

Source Section

Handover Matrix Counter for Soft/Softer Handover

NumUserBits_PS64DL_Max

Succeeded by:DataRate_PS64DL_Max. Number of Downlink User Bits for PS DL 64 kbps Data Rate. This peg provides Maximum aggregation for the NumUserBits.PS64DL measurement.

Data Source

RNC

Source Field

NumUserBits.PS64DL

Source Section

Handover Matrix Counter for Soft/Softer Handover

NumUserBits_PS64DL_SumMax

Succeeded by:DataRate_PS64DL_SumMax. Number of Downlink User Bits for PS DL 64 kbps Data Rate. This peg provides Sum across time and Maximum across elements aggregation for the NumUserBits.PS64DL measurement.

Data Source

RNC

Source Field

NumUserBits.PS64DL

Source Section

Handover Matrix Counter for Soft/Softer Handover

NumUserBits_PS64UL

Succeeded by:DataRate_PS64UL. Number of Uplink User Bits for PS UL 64 kbps Data Rate. (Sum aggregation.)

Data Source

RNC

Source Field

NumUserBits.PS64UL

Source Section

Handover Matrix Counter for Soft/Softer Handover

NumUserBits_PS64UL_Avg

Succeeded by:DataRate_PS64UL_Avg. Number of Uplink User Bits for PS UL 64 kbps Data Rate. This peg provides Average aggregation for the NumUserBits.PS64UL measurement.

Data Source

RNC

Source Field

NumUserBits.PS64UL

Source Section

Handover Matrix Counter for Soft/Softer Handover

NumUserBits_PS64UL_Max

Succeeded by:DataRate_PS64UL_Max. Number of Uplink User Bits for PS UL 64 kbps Data Rate. This peg provides Maximum aggregation for the NumUserBits.PS64UL measurement.

Data Source

RNC

Source Field

NumUserBits.PS64UL

Source Section

Handover Matrix Counter for Soft/Softer Handover

NumUserBits_PS64UL_SumMax

Succeeded by:DataRate_PS64UL_SumMax. Number of Uplink User Bits for PS UL 64 kbps Data Rate. This peg provides Sum across time and Maximum across elements aggregation for the NumUserBits.PS64UL measurement.

Data Source

RNC

Source Field

NumUserBits.PS64UL

Source Section

Handover Matrix Counter for Soft/Softer Handover

NumUserBitsPsDiscardDL

Succeeded by:IU_PS_DataRate_PSDL_Discard. Number of Discarded Downlink User Bits for Traffic Type PS

Data Source

RNC

Source Field

NumUserBitsPsDiscardDL

Source Section

Handover Matrix Counter for Soft/Softer Handover

NumUserBitsPsDL

Succeeded by:IU_PS_DataRate_PSDL. Number of Downlink User Bits for Traffic Type PS

Data Source

RNC

Source Field

NumUserBitsPsDL

Source Section

Handover Matrix Counter for Soft/Softer Handover

NumUserBitsPSDL_Bgrd_DCH

Succeeded by:DataRate_PSDLBgrd_DCH. Number of Downlink PS User Bits for QoS class background mapped on DCH. (Sum aggregation.)

Data Source

RNC

Source Field

NumUserBitsPSDL.Bgrd.DCH

Source Section

Handover Matrix Counter for Soft/Softer Handover

NumUserBitsPSDL_Bgrd_DCH_Avg

Succeeded by:DataRate_PSDLBgrd_DCH_Avg. Number of Downlink PS User Bits for QoS class background mapped on DCH. This peg provides Average aggregation for the NumUserBitsPSDL.Bgrd.DCH measurement.

Data Source

RNC

Source Field

NumUserBitsPSDL.Bgrd.DCH

Source Section

Handover Matrix Counter for Soft/Softer Handover

NumUserBitsPSDL_Bgrd_DCH_Max

Succeeded by:DataRate_PSDLBgrd_DCH_Max. Number of Downlink PS User Bits for QoS class background mapped on DCH. This peg provides Maximum aggregation for the NumUserBitsPSDL.Bgrd.DCH measurement.

Data Source

RNC

Source Field

NumUserBitsPSDL.Bgrd.DCH

Source Section

Handover Matrix Counter for Soft/Softer Handover

NumUserBitsPSDL_Bgrd_DCH_SumMax

Succeeded by:DataRate_PSDLBgrd_DCH_SumMax. Number of Downlink PS User Bits for QoS class background mapped on DCH. This peg provides Sum across time and Maximum across elements aggregation for the NumUserBitsPSDL.Bgrd.DCH measurement.

Data Source

RNC

Source Field

NumUserBitsPSDL.Bgrd.DCH

Source Section

Handover Matrix Counter for Soft/Softer Handover

NumUserBitsPSDL_Bgrd_HSDSCH

Succeeded by:DataRate_PSDLBgrd_HSDSCH. Number of Downlink PS User Bits for QoS class background mapped on HS-DSCH. (Sum aggregation.)

Data Source

RNC

Source Field

NumUserBitsPSDL.Bgrd.HSDSCH

Source Section

Handover Matrix Counter for Soft/Softer Handover

NumUserBitsPSDL_Bgrd_HSDSCH_Avg

Succeeded by:DataRate_PSDLBgrd_HSDSCH_Avg. Number of Downlink PS User Bits for QoS class background mapped on HS-DSCH. This peg provides Average aggregation for the NumUserBitsPSDL.Bgrd.HSDSCH measurement.

Data Source

RNC

Source Field

NumUserBitsPSDL.Bgrd.HSDSCH

Source Section

Handover Matrix Counter for Soft/Softer Handover

NumUserBitsPSDL_Bgrd_HSDSCH_Max

Succeeded by:DataRate_PSDLBgrd_HSDSCH_Max. Number of Downlink PS User Bits for QoS class background mapped on HS-DSCH. This peg provides Maximum aggregation for the NumUserBitsPSDL.Bgrd.HSDSCH measurement.

Data Source

RNC

Source Field

NumUserBitsPSDL.Bgrd.HSDSCH

Source Section

Handover Matrix Counter for Soft/Softer Handover

NumUserBitsPSDL_Bgrd_HSDSCH_SumMax

Succeeded by:DataRate_PSDLBgrd_HSDSCH_SumMax. Number of Downlink PS User Bits for QoS class background mapped on HS-DSCH. This peg provides Sum across time and Maximum across elements aggregation for the NumUserBitsPSDL.Bgrd.HSDSCH measurement.

Data Source

RNC

Source Field

NumUserBitsPSDL.Bgrd.HSDSCH

Source Section

Handover Matrix Counter for Soft/Softer Handover

NumUserBitsPSDL_Intact_DCH

Succeeded by:DataRate_PSDLIntact_DCH. Number of Downlink PS User Bits for QoS class interactive mapped on DCH. (Sum aggregation.)

Data Source

RNC

Source Field

NumUserBitsPSDL.Intact.DCH

Source Section

Handover Matrix Counter for Soft/Softer Handover

NumUserBitsPSDL_Intact_DCH_Avg

Succeeded by:DataRate_PSDLIntact_DCH_Avg. Number of Downlink PS User Bits for QoS class interactive mapped on DCH. This peg provides Average aggregation for the NumUserBitsPSDL.Intact.DCH measurement.

Data Source

RNC

Source Field

NumUserBitsPSDL.Intact.DCH

Source Section

Handover Matrix Counter for Soft/Softer Handover

NumUserBitsPSDL_Intact_DCH_Max

Succeeded by:DataRate_PSDLIntact_DCH_Max. Number of Downlink PS User Bits for QoS class interactive mapped on DCH. This peg provides Maximum aggregation for the NumUserBitsPSDL.Intact.DCH measurement.

Data Source

RNC

Source Field

NumUserBitsPSDL.Intact.DCH

Source Section

Handover Matrix Counter for Soft/Softer Handover

NumUserBitsPSDL_Intact_DCH_SumMax

Succeeded by:DataRate_PSDLIntact_DCH_SumMax. Number of Downlink PS User Bits for QoS class interactive mapped on DCH. This peg provides Sum across time and Maximum across elements aggregation for the NumUserBitsPSDL.Intact.DCH measurement.

Data Source

RNC

Source Field

NumUserBitsPSDL.Intact.DCH

Source Section

Handover Matrix Counter for Soft/Softer Handover

NumUserBitsPSDL_Intact_HSDSCH

Succeeded by:DataRate_PSDLIntact_HSDSCH. Number of Downlink PS User Bits for QoS class interactive mapped on HS-DSCH. (Sum aggregation.)

Data Source

RNC

Source Field

NumUserBitsPSDL.Intact.HSDSCH

Source Section

Handover Matrix Counter for Soft/Softer Handover

NumUserBitsPSDL_Intact_HSDSCH_Avg

Succeeded by:DataRate_PSDLIntact_HSDSCH_Avg. Number of Downlink PS User Bits for QoS class interactive mapped on HS-DSCH. This peg provides Average aggregation for the NumUserBitsPSDL.Intact.HSDSCH measurement.

Data Source

RNC

Source Field

NumUserBitsPSDL.Intact.HSDSCH

Source Section

Handover Matrix Counter for Soft/Softer Handover

NumUserBitsPSDL_Intact_HSDSCH_Max

Succeeded by:DataRate_PSDLIntact_HSDSCH_Max. Number of Downlink PS User Bits for QoS class interactive mapped on HS-DSCH. This peg provides Maximum aggregation for the NumUserBitsPSDL.Intact.HSDSCH measurement.

Data Source

RNC

Source Field

NumUserBitsPSDL.Intact.HSDSCH

Source Section

Handover Matrix Counter for Soft/Softer Handover

NumUserBitsPSDL_Intact_HSDSCH_SumMax

Succeeded by:DataRate_PSDLIntact_HSDSCH_SumMax. Number of Downlink PS User Bits for QoS class interactive mapped on HS-DSCH. This peg provides Sum across time and Maximum across elements aggregation for the NumUserBitsPSDL.Intact.HSDSCH measurement.

Data Source

RNC

Source Field

NumUserBitsPSDL.Intact.HSDSCH

Source Section

Handover Matrix Counter for Soft/Softer Handover

NumUserBitsPSDL_Strm_DCH

Succeeded by:DataRate_PSDLStrm_DCH. Number of Downlink PS User Bits with QoS Class Streaming mapped on DCH. (Sum aggregation.)

Data Source

RNC

Source Field

NumUserBitsPSDL.Strm.DCH

Source Section

Handover Matrix Counter for Soft/Softer Handover

NumUserBitsPSDL_Strm_DCH_Avg

Succeeded by:DataRate_PSDLStrm_DCH_Avg. Number of Downlink PS User Bits with QoS Class Streaming mapped on DCH. This peg provides Average aggregation for the NumUserBitsPSDL.Strm.DCH measurement.

Data Source

RNC

Source Field

NumUserBitsPSDL.Strm.DCH

Source Section

Handover Matrix Counter for Soft/Softer Handover

NumUserBitsPSDL_Strm_DCH_Max

Succeeded by:DataRate_PSDLStrm_DCH_Max. Number of Downlink PS User Bits with QoS Class Streaming mapped on DCH. This peg provides Maximum aggregation for the NumUserBitsPSDL.Strm.DCH measurement.

Data Source

RNC

Source Field

NumUserBitsPSDL.Strm.DCH

Source Section

Handover Matrix Counter for Soft/Softer Handover

NumUserBitsPSDL_Strm_DCH_SumMax

Succeeded by:DataRate_PSDLStrm_DCH_SumMax. Number of Downlink PS User Bits with QoS Class Streaming mapped on DCH. This peg provides Sum across time and Maximum across elements aggregation for the NumUserBitsPSDL.Strm.DCH measurement.

Data Source

RNC

Source Field

NumUserBitsPSDL.Strm.DCH

Source Section

Handover Matrix Counter for Soft/Softer Handover

NumUserBitsPSUL_Bgrd

Succeeded by:DataRate_PSULBgrd. Number of Uplink PS User Bits with QoS class background. (Sum aggregation.)

Data Source

RNC

Source Field

NumUserBitsPSUL.Bgrd

Source Section

Handover Matrix Counter for Soft/Softer Handover

NumUserBitsPSUL_Bgrd_Avg

Succeeded by:DataRate_PSULBgrd_Avg. Number of Uplink PS User Bits with QoS class background. This peg provides Average aggregation for the NumUserBitsPSUL.Bgrd measurement.

Data Source

RNC

Source Field

NumUserBitsPSUL.Bgrd

Source Section

Handover Matrix Counter for Soft/Softer Handover

NumUserBitsPSUL_Bgrd_Max

Succeeded by:DataRate_PSULBgrd_Max. Number of Uplink PS User Bits with QoS class background. This peg provides Maximum aggregation for the NumUserBitsPSUL.Bgrd measurement.

Data Source

RNC

Source Field

NumUserBitsPSUL.Bgrd

Source Section

Handover Matrix Counter for Soft/Softer Handover

NumUserBitsPSUL_Bgrd_SumMax

Succeeded by:DataRate_PSULBgrd_SumMax. Number of Uplink PS User Bits with QoS class background. This peg provides Sum across time and Maximum across elements aggregation for the NumUserBitsPSUL.Bgrd measurement.

Data Source

RNC

Source Field

NumUserBitsPSUL.Bgrd

Source Section

Handover Matrix Counter for Soft/Softer Handover

NumUserBitsPSUL_Intact

Succeeded by:DataRate_PSULIntact. Number of Uplink PS User Bits with QoS class interactive. (Sum aggregation.)

Data Source

RNC

Source Field

NumUserBitsPSUL.Intact

Source Section

Handover Matrix Counter for Soft/Softer Handover

NumUserBitsPSUL_Intact_Avg

Succeeded by:DataRate_PSULIntact_Avg. Number of Uplink PS User Bits with QoS class interactive. This peg provides Average aggregation for the NumUserBitsPSUL.Intact measurement.

Data Source

RNC

Source Field

NumUserBitsPSUL.Intact

Source Section

Handover Matrix Counter for Soft/Softer Handover

NumUserBitsPSUL_Intact_Max

Succeeded by:DataRate_PSULIntact_Max. Number of Uplink PS User Bits with QoS class interactive. This peg provides Maximum aggregation for the NumUserBitsPSUL.Intact measurement.

Data Source

RNC

Source Field

NumUserBitsPSUL.Intact

Source Section

Handover Matrix Counter for Soft/Softer Handover

NumUserBitsPSUL_Intact_SumMax

Succeeded by:DataRate_PSULIntact_SumMax. Number of Uplink PS User Bits with QoS class interactive. This peg provides Sum across time and Maximum across elements aggregation for the NumUserBitsPSUL.Intact measurement.

Data Source

RNC

Source Field

NumUserBitsPSUL.Intact

Source Section

Handover Matrix Counter for Soft/Softer Handover

NumUserBitsPSUL_Strm

Succeeded by:DataRate_PSULStrm. Number of Uplink PS User Bits with QoS Class Streaming. (Sum aggregation.)

Data Source

RNC

Source Field

NumUserBitsPSUL.Strm

Source Section

Handover Matrix Counter for Soft/Softer Handover

NumUserBitsPSUL_Strm_Avg

Succeeded by:DataRate_PSULStrm_Avg. Number of Uplink PS User Bits with QoS Class Streaming. This peg provides Average aggregation for the NumUserBitsPSUL.Strm measurement.

Data Source

RNC

Source Field

NumUserBitsPSUL.Strm

Source Section

Handover Matrix Counter for Soft/Softer Handover

NumUserBitsPSUL_Strm_Max

Succeeded by:DataRate_PSULStrm_Max. Number of Uplink PS User Bits with QoS Class Streaming. This peg provides Maximum aggregation for the NumUserBitsPSUL.Strm measurement.

Data Source

RNC

Source Field

NumUserBitsPSUL.Strm

Source Section

Handover Matrix Counter for Soft/Softer Handover

NumUserBitsPSUL_Strm_SumMax

Succeeded by:DataRate_PSULStrm_SumMax. Number of Uplink PS User Bits with QoS Class Streaming. This peg provides Sum across time and Maximum across elements aggregation for the NumUserBitsPSUL.Strm measurement.

Data Source

RNC

Source Field

NumUserBitsPSUL.Strm

Source Section

Handover Matrix Counter for Soft/Softer Handover

OvinCnAccLaDscrdDlNpgMsgDscrdTcplnk

Number of uplink or downlink messages discarded at CN Access La on PMC-RAB (DlNpgMsgDscrdTcplnk)

Data Source

RNC C-Node

Source Field

VS.OvinCnAccLaDscrd.DlNpgMsgDscrdTcplnk

Source Section

RncEquipment

OvinCnAccLaDscrdDlPgMsgDscrdTcplnk

Number of uplink or downlink messages discarded at CN Access La on PMC-RAB (DlPgMsgDscrdTcplnk)

Data Source

RNC C-Node

Source Field

VS.OvinCnAccLaDscrd.DlPgMsgDscrdTcplnk

Source Section

RncEquipment

OvinCnAccLaDscrdNumUlTrshMsgDscrd

Number of uplink or downlink messages discarded at CN Access La on PMC-RAB (NumUlTrshMsgDscrd)

Data Source

RNC C-Node

Source Field

VS.OvinCnAccLaDscrd.NumUlTrshMsgDscrd

Source Section

RncEquipment

OvinNiDscrdTrshNnPgMsgsDscrd

Number of Core Network messages received and in NI (TrshNnPgMsgsDscrd)

Data Source

RNC C-Node

Source Field

VS.OvinNiDscrd.TrshNnPgMsgsDscrd

Source Section

RncEquipment

OvinNiDscrdTrshPgMsgsDscrd

Number of Core Network messages received and in NI (TrshPgMsgsDscrd)

Data Source

RNC C-Node

Source Field

VS.OvinNiDscrd.TrshPgMsgsDscrd

Source Section

RncEquipment

OvinNiDscrdTtlTrshNnPgMsgs

Number of Core Network messages received and in NI (TtlTrshNnPgMsgs)

Data Source

RNC C-Node

Source Field

VS.OvinNiDscrd.TtlTrshNnPgMsgs

Source Section

RncEquipment

OvinNiDscrdTtlTrshPgMsgs

Number of Core Network messages received and in NI (TtlTrshPgMsgs)

Data Source

RNC C-Node

Source Field

VS.OvinNiDscrd.TtlTrshPgMsgs

Source Section

RncEquipment

OvinRabRrcConReqDscrd

Total RRC connection messages dropped due to panic overload (OvinRabRrcConReqDscrd)

Data Source

RNC C-Node

Source Field

VS.OvinRabRrcConReqDscrd

Source Section

RncEquipment

PagingRequestsIuPagCauseCsTerminatingBackgroundCall

Number of paging request messages received on an Iu CS per paging cause. (TerminatingBackgroundCall)

Data Source

RNC C-Node

Source Field

VS.PagingRequestsIuPagCauseCs.TerminatingBackgroundCall

Source Section

RncEquipment

PagingRequestsIuPagCauseCsTerminatingCauseUnknown

Number of paging request messages received on an Iu CS per paging cause. (TerminatingCauseUnknown)

Data Source

RNC C-Node

Source Field

VS.PagingRequestsIuPagCauseCs.TerminatingCauseUnknown

Source Section

RncEquipment

PagingRequestsIuPagCauseCsTerminatingConversationalCall

Number of paging request messages received on an Iu CS per paging cause. (TerminatingConversationalCall)

Data Source

RNC C-Node

Source Field

VS.PagingRequestsIuPagCauseCs.TerminatingConversationalCall

Source Section

RncEquipment

PagingRequestsIuPagCauseCsTerminatingHighPrioritySignalling

Number of paging request messages received on an Iu CS per paging cause. (TerminatingHighPrioritySignalling)

Data Source

RNC C-Node

Source Field

VS.PagingRequestsIuPagCauseCs.TerminatingHighPrioritySignalling

Source Section

RncEquipment

PagingRequestsIuPagCauseCsTerminatingInteractiveCall

Number of paging request messages received on an Iu CS per paging cause. (TerminatingInteractiveCall)

Data Source

RNC C-Node

Source Field

VS.PagingRequestsIuPagCauseCs.TerminatingInteractiveCall

Source Section

RncEquipment

PagingRequestsIuPagCauseCsTerminatingLowPrioritySignalling

Number of paging request messages received on an Iu CS per paging cause. (TerminatingLowPrioritySignalling)

Data Source

RNC C-Node

Source Field

VS.PagingRequestsIuPagCauseCs.TerminatingLowPrioritySignalling

Source Section

RncEquipment

PagingRequestsIuPagCauseCsTerminatingStreamingCall

Number of paging request messages received on an Iu CS per paging cause. (TerminatingStreamingCall)

Data Source

RNC C-Node

Source Field

VS.PagingRequestsIuPagCauseCs.TerminatingStreamingCall

Source Section

RncEquipment

PagingRequestsIuPagCausePsTerminatingBackgroundCall

Number of paging request messages received on an Iu PS per paging cause. (TerminatingBackgroundCall)

Data Source

RNC C-Node

Source Field

VS.PagingRequestsIuPagCausePs.TerminatingBackgroundCall

Source Section

RncEquipment

PagingRequestsIuPagCausePsTerminatingCauseUnknown

Number of paging request messages received on an Iu PS per paging cause. (TerminatingCauseUnknown)

Data Source

RNC C-Node

Source Field

VS.PagingRequestsIuPagCausePs.TerminatingCauseUnknown

Source Section

RncEquipment

PagingRequestsIuPagCausePsTerminatingConversationalCall

Number of paging request messages received on an Iu PS per paging cause. (TerminatingConversationalCall)

Data Source

RNC C-Node

Source Field

VS.PagingRequestsIuPagCausePs.TerminatingConversationalCall

Source Section

RncEquipment

PagingRequestsIuPagCausePsTerminatingHighPrioritySignalling

Number of paging request messages received on an Iu PS per paging cause. (TerminatingHighPrioritySignalling)

Data Source

RNC C-Node

Source Field

VS.PagingRequestsIuPagCausePs.TerminatingHighPrioritySignalling

Source Section

RncEquipment

PagingRequestsIuPagCausePsTerminatingInteractiveCall

Number of paging request messages received on an Iu PS per paging cause. (TerminatingInteractiveCall)

Data Source

RNC C-Node

Source Field

VS.PagingRequestsIuPagCausePs.TerminatingInteractiveCall

Source Section

RncEquipment

PagingRequestsIuPagCausePsTerminatingLowPrioritySignalling

Number of paging request messages received on an Iu PS per paging cause. (TerminatingLowPrioritySignalling)

Data Source

RNC C-Node

Source Field

VS.PagingRequestsIuPagCausePs.TerminatingLowPrioritySignalling

Source Section

RncEquipment

PagingRequestsIuPagCausePsTerminatingStreamingCall

Number of paging request messages received on an Iu PS per paging cause. (TerminatingStreamingCall)

Data Source

RNC C-Node

Source Field

VS.PagingRequestsIuPagCausePs.TerminatingStreamingCall

Source Section

RncEquipment

PagingRspPaging

Paging (Paging)

Data Source

RNC C-Node

Source Field

VS.PagingRsp.Paging

Source Section

RncEquipment

PO_BSCCP_Mean

Mean Processor Occupancy BSC CP

Data Source

RNC

Source Field

VS.PO.BSCCP.Mean

Source Section

RncFunction

PO_BSCOAM_Mean

Mean Processor Occupancy BSC OAM

Data Source

RNC

Source Field

VS.PO.BSCOAM.Mean

Source Section

RncFunction

PO_TPUCP_Mean

Mean Processor Occupancy TPU Control Processor

Data Source

RNC

Source Field

VS.PO.TPUCP.Mean

Source Section

RncFunction

PO_TPUGICCP1_Mean

Mean Processor Occupancy TPU GICC Pair 1 Processors

Data Source

RNC

Source Field

VS.PO.TPUGICCP1.Mean

Source Section

RncFunction

PO_TPUGICCP2_Mean

Mean Processor Occupancy TPU GICC Pair 2 Processors

Data Source

RNC

Source Field

VS.PO.TPUGICCP2.Mean

Source Section

RncFunction

PO_TPUSP_Mean

Mean Processor Occupancy TPU Signalling Processor

Data Source

RNC

Source Field

VS.PO.TPUSP.Mean

Source Section

RncFunction

PO_TPUTP_Mean

Mean Processor Occupancy TPU Traffic Processor

Data Source

RNC

Source Field

VS.PO.TPUTP.Mean

Source Section

RncFunction

PsLocationReportingControlGeoLs

Number of RANAP location reporting control messages for geographical area purpose issued by the PS domain and served with a geographical location service (PsLocationReportingControlGeoLs)

Data Source

RNC C-Node

Source Field

VS.PsLocationReportingControlGeoLs

Source Section

RncEquipment

PsLocationReportingControlSaLs

Number of RANAP location reporting control messages for service area purpose issued by the PS domain and served with a default location service (PsLocationReportingControlSaLs)

Data Source

RNC C-Node

Source Field

VS.PsLocationReportingControlSaLs

Source Section

RncEquipment

PsLocationReportSuccessGeoLsOutsideQosCellId

Number of RANAP location report messages for geographical area purpose sent to the PS domain served with a geographical location service and which do not satisfy the requested QoS. (CellId)

Data Source

RNC C-Node

Source Field

VS.PsLocationReportSuccessGeoLsOutsideQos.CellId

Source Section

RncEquipment

PsLocationReportSuccessGeoLsOutsideQosCIDRTT

Number of RANAP location report messages for geographical area purpose sent to the PS domain served with a geographical location service and which do not satisfy the requested QoS. (CIDRTT)

Data Source

RNC C-Node

Source Field

VS.PsLocationReportSuccessGeoLsOutsideQos.CIDRTT

Source Section

RncEquipment

PsLocationReportSuccessGeoLsOutsideQosUeBasedAgps

Number of RANAP location report messages for geographical area purpose sent to the PS domain served with a geographical location service and which do not satisfy the requested QoS. (UeBasedAgps)

Data Source

RNC C-Node

Source Field

VS.PsLocationReportSuccessGeoLsOutsideQos.UeBasedAgps

Source Section

RncEquipment

PsLocationReportSuccessGeoLsWithinQosCellId

Number of RANAP location report messages for geographical area purpose sent to the PS domain served with a geographical location service and which satisfy the requested QoS. (CellId)

Data Source

RNC C-Node

Source Field

VS.PsLocationReportSuccessGeoLsWithinQos.CellId

Source Section

RncEquipment

PsLocationReportSuccessGeoLsWithinQosCIDRTT

Number of RANAP location report messages for geographical area purpose sent to the PS domain served with a geographical location service and which satisfy the requested QoS. (CIDRTT)

Data Source

RNC C-Node

Source Field

VS.PsLocationReportSuccessGeoLsWithinQos.CIDRTT

Source Section

RncEquipment

PsLocationReportSuccessGeoLsWithinQosUeBasedAgps

Number of RANAP location report messages for geographical area purpose sent to the PS domain served with a geographical location service and which satisfy the requested QoS. (UeBasedAgps)

Data Source

RNC C-Node

Source Field

VS.PsLocationReportSuccessGeoLsWithinQos.UeBasedAgps

Source Section

RncEquipment

PsLocationReportSuccessSaLs

Number of RANAP location report messages for service area purpose sent to the PS domain and served with a default location service (PsLocationReportSuccessSaLs)

Data Source

RNC C-Node

Source Field

VS.PsLocationReportSuccessSaLs

Source Section

RncEquipment

PsLocationReportUnsuccessGeoLsAbortProcedure

Number of RANAP location report messages for geographical area purpose sent to the PS domain, failed and that were supposed to be served with a geographical location service (AbortProcedure)

Data Source

RNC C-Node

Source Field

VS.PsLocationReportUnsuccessGeoLs.AbortProcedure

Source Section

RncEquipment

PsLocationReportUnsuccessGeoLsDistantCellInfoNotFound

Number of RANAP location report messages for geographical area purpose sent to the PS domain, failed and that were supposed to be served with a geographical location service (DistantCellInfoNotFound)

Data Source

RNC C-Node

Source Field

VS.PsLocationReportUnsuccessGeoLs.DistantCellInfoNotFound

Source Section

RncEquipment

PsLocationReportUnsuccessGeoLsLocalCellInfoNotFound

Number of RANAP location report messages for geographical area purpose sent to the PS domain, failed and that were supposed to be served with a geographical location service (LocalCellInfoNotFound)

Data Source

RNC C-Node

Source Field

VS.PsLocationReportUnsuccessGeoLs.LocalCellInfoNotFound

Source Section

RncEquipment

PsLocationReportUnsuccessGeoLsRelocationProcedure

Number of RANAP location report messages for geographical area purpose sent to the PS domain, failed and that were supposed to be served with a geographical location service (RelocationProcedure)

Data Source

RNC C-Node

Source Field

VS.PsLocationReportUnsuccessGeoLs.RelocationProcedure

Source Section

RncEquipment

PsLocationReportUnsuccessGeoLsUnknown

Number of RANAP location report messages for geographical area purpose sent to the PS domain, failed and that were supposed to be served with a geographical location service (Unknown)

Data Source

RNC C-Node

Source Field

VS.PsLocationReportUnsuccessGeoLs.Unknown

Source Section

RncEquipment

PsLocationReportUnsuccessSaLsDistantCellInfoNotFound

Number of RANAP location report messages for service area purpose sent to the PS domain, failed and that was supposed to be served by a default location service (DistantCellInfoNotFound)

Data Source

RNC C-Node

Source Field

VS.PsLocationReportUnsuccessSaLs.DistantCellInfoNotFound

Source Section

RncEquipment

PsLocationReportUnsuccessSaLsLocalCellInfoNotFound

Number of RANAP location report messages for service area purpose sent to the PS domain, failed and that was supposed to be served by a default location service (LocalCellInfoNotFound)

Data Source

RNC C-Node

Source Field

VS.PsLocationReportUnsuccessSaLs.LocalCellInfoNotFound

Source Section

RncEquipment

PsLocationReportUnsuccessSaLsUnknown

Number of RANAP location report messages for service area purpose sent to the PS domain, failed and that was supposed to be served by a default location service (Unknown)

Data Source

RNC C-Node

Source Field

VS.PsLocationReportUnsuccessSaLs.Unknown

Source Section

RncEquipment

PsLocationUeBasedAgpsSuccess

Number of successful location estimations using UE based A-GPS method for PS domain. (PsLocationUeBasedAgpsSuccess)

Data Source

RNC C-Node

Source Field

VS.PsLocationUeBasedAgpsSuccess

Source Section

RncEquipment

PsLocationUebasedAgpsUnsuccessAgpsUEbasedTooLong

Number of failed location of the UE using the UE-based AGPS method for PS domain. (AgpsUEbasedTooLong)

Data Source

RNC C-Node

Source Field

VS.PsLocationUebasedAgpsUnsuccess.AgpsUEbasedTooLong

Source Section

RncEquipment

PsLocationUebasedAgpsUnsuccessIsmlcAssDataTooLong

Number of failed location of the UE using the UE-based AGPS method for PS domain. (IsmlcAssDataTooLong)

Data Source

RNC C-Node

Source Field

VS.PsLocationUebasedAgpsUnsuccess.IsmlcAssDataTooLong

Source Section

RncEquipment

PsLocationUebasedAgpsUnsuccessOther

Number of failed location of the UE using the UE-based AGPS method for PS domain. (Other)

Data Source

RNC C-Node

Source Field

VS.PsLocationUebasedAgpsUnsuccess.Other

Source Section

RncEquipment

PsLocationUebasedAgpsUnsuccessSasPcapFailure

Number of failed location of the UE using the UE-based AGPS method for PS domain. (SasPcapFailure)

Data Source

RNC C-Node

Source Field

VS.PsLocationUebasedAgpsUnsuccess.SasPcapFailure

Source Section

RncEquipment

PsLocationUebasedAgpsUnsuccessSasServicesNotAvailable

Number of failed location of the UE using the UE-based AGPS method for PS domain. (SasServicesNotAvailable)

Data Source

RNC C-Node

Source Field

VS.PsLocationUebasedAgpsUnsuccess.SasServicesNotAvailable

Source Section

RncEquipment

PsLocationUebasedAgpsUnsuccessUePositioningError

Number of failed location of the UE using the UE-based AGPS method for PS domain. (UePositioningError)

Data Source

RNC C-Node

Source Field

VS.PsLocationUebasedAgpsUnsuccess.UePositioningError

Source Section

RncEquipment

RAB_AttModPS_Strm

SGSN Initiated Attempted RAB Modifications for QoS Streaming on PS domain

Data Source

RNC

Source Field

RAB.AttModPS.Strm

Source Section

SGSN Initiated RAB Modification on PS Domain

RAB_AttModPSRNCini_BLER_Strm

RNC Initiated Attempted RAB Modifications for PS Streaming RABs due to BLER

Data Source

RNC

Source Field

VS.RAB.AttModPSRNCini.BLER.Strm

Source Section

RNC Initiated RAB Modification

RAB_AttModPSRNCini_DLConC_Strm

RNC Initiated Attempted RAB Modifications for PS Streaming RABs due to DL Congestion

Data Source

RNC

Source Field

VS.RAB.AttModPSRNCini.DLConC.Strm

Source Section

RNC Initiated RAB Modification

RAB_AttModPSRNCini_UEtxPwr_Strm

RNC Initiated Attempted RAB Modifications for PS Streaming RABs due to UE tx Power

Data Source

RNC

Source Field

VS.RAB.AttModPSRNCini.UEtxPwr.Strm

Source Section

RNC Initiated RAB Modification

RAB_AttModPSRNCini_ULConC_Strm

RNC Initiated Attempted RAB Modifications for PS Streaming RABs due to UL Congestion

Data Source

RNC

Source Field

VS.RAB.AttModPSRNCini.ULConC.Strm

Source Section

RNC Initiated RAB Modification

RAB_FailModPSNoQueuing_IncompReq

SGSN initiated Failed RAB Modification for PS domain per failure cause - IncompatibleRequest

Data Source

RNC

Source Field

RAB.FailModPSNoQueuing.IncompReq

Source Section

SGSN Initiated RAB Modification on PS Domain

RAB_FailModPSNoQueuing_Incr

SGSN initiated Failed RAB Modification for PS domain per failure cause - Increase

Data Source

RNC

Source Field

RAB.FailModPSNoQueuing.Incr

Source Section

SGSN Initiated RAB Modification on PS Domain

RAB_FailModPSNoQueuing_ProcFail

SGSN initiated Failed RAB Modification for PS domain per failure cause - ProcedureFail

Data Source

RNC

Source Field

RAB.FailModPSNoQueuing.ProcFail

Source Section

SGSN Initiated RAB Modification on PS Domain

RAB_FailModPSNoQueuing_Strm

SGSN initiated Failed RAB Modification for QoS Streaming on PS domain

Data Source

RNC

Source Field

RAB.FailModPSNoQueuing.Strm

Source Section

SGSN Initiated RAB Modification on PS Domain

RAB_MeanActive_Bgrd_DCH

Renamed 4.3.7.0.10 - new name:RAB_MeanActive_Bgrd_DCH_DCH.Mean Number of Active DL RABs on DCH for QoS Class Background

Data Source

RNC

Source Field

VS.RAB.MeanActive.Bgrd.DCH

Source Section

Mean Number of RABs with active data transmission

RAB_MeanActive_Bgrd_DCH_DCH

Mean Number of Active DL RABs per QoS Class on DCH / HSDSCH - Background per DCH usage in the DL

Data Source

RNC

Source Field

VS.RAB.MeanActive.Bgrd.DCH_DCH

Source Section

RncFunction

RAB_MeanActive_Bgrd_DCH_HSDSCH

Mean Number of Active DL RABs per QoS Class on DCH / HSDSCH - Background per HSDSCH usage in the DL

Data Source

RNC

Source Field

VS.RAB.MeanActive.Bgrd.DCH_HSDSCH

Source Section

RncFunction

RAB_MeanActive_Bgrd_EDCH_HSDSCH

Mean Number of Active DL RABs with QoS Class 'Background' on EDCH/HSDSCH

Data Source

RNC

Source Field

VS.RAB.MeanActive.Bgrd.EDCH_HSDSCH

Source Section

RncFunction

RAB_MeanActive_Bgrd_HSDSCH

Renamed 4.3.7.0.10 - new name:RAB_MeanActive_Bgrd_DCH_HSDSCH. Mean Number of Active DL RABs on HSDSCH for QoS Class Background

Data Source

RNC

Source Field

VS.RAB.MeanActive.Bgrd.HSDSCH

Source Section

Mean Number of RABs with active data transmission

RAB_MeanActive_Intact_DCH

Renamed 4.3.7.0.10 - new name:RAB_MeanActive_Intact_DCH_DCH. Mean Number of Active DL RABs on DCH for QoS Class Interactive

Data Source

RNC

Source Field

VS.RAB.MeanActive.Intact.DCH

Source Section

Mean Number of RABs with active data transmission

RAB_MeanActive_Intact_DCH_DCH

Mean Number of Active DL RABs per QoS Class on DCH / HSDSCH - Interactive per DCH usage in the DL

Data Source

RNC

Source Field

VS.RAB.MeanActive.Intact.DCH_DCH

Source Section

RncFunction

RAB_MeanActive_Intact_DCH_HSDSCH

Mean Number of Active DL RABs per QoS Class on DCH / HSDSCH - Interactive per HSDSCH usage in the DL

Data Source

RNC

Source Field

VS.RAB.MeanActive.Intact.DCH_HSDSCH

Source Section

RncFunction

RAB_MeanActive_Intact_EDCH_HSDSCH

Mean Number of Active DL RABs with QoS Class 'Interactive' on EDCH/HSDSCH

Data Source

RNC

Source Field

VS.RAB.MeanActive.Intact.EDCH_HSDSCH

Source Section

RncFunction

RAB_MeanActive_Intact_HSDSCH

Renamed 4.3.7.0.10 - new name:RAB_MeanActive_Intact_DCH_HSDSCH.Mean Number of Active DL RABs on HSDSCH for QoS Class Interactive

Data Source

RNC

Source Field

VS.RAB.MeanActive.Intact.HSDSCH

Source Section

Mean Number of RABs with active data transmission

RAB_MeanActive_PS128DL

Mean Number of Active RABs for DL Data Rate of 128 kbps

Data Source

RNC

Source Field

VS.RAB.MeanActive.PS128DL

Source Section

Mean Number of RABs with active data transmission

RAB_MeanActive_PS128UL

Mean Number of Active RABs for UL Data Rate of 128 kbps

Data Source

RNC

Source Field

VS.RAB.MeanActive.PS128UL

Source Section

Mean Number of RABs with active data transmission

RAB_MeanActive_PS16DL

Mean Number of Active RABs with 16 kbps DL Data Rate

Data Source

RNC

Source Field

VS.RAB.MeanActive.PS16DL

Source Section

Mean Number of RABs with active data transmission

RAB_MeanActive_PS16UL

Mean Number of Active RABs for 16 kbps UL Data Rate

Data Source

RNC

Source Field

VS.RAB.MeanActive.PS16UL

Source Section

Mean Number of RABs with active data transmission

RAB_MeanActive_PS32DL

Mean Number of Active RABs for DL Data Rate of 32 kbps

Data Source

RNC

Source Field

VS.RAB.MeanActive.PS32DL

Source Section

Mean Number of RABs with active data transmission

RAB_MeanActive_PS32UL

Mean Number of Active RABs for UL Data Rate of 32 kbps

Data Source

RNC

Source Field

VS.RAB.MeanActive.PS32UL

Source Section

Mean Number of RABs with active data transmission

RAB_MeanActive_PS384DL

Mean Number of Active RABs for DL Data Rate of 384 kbps

Data Source

RNC

Source Field

VS.RAB.MeanActive.PS384DL

Source Section

Mean Number of RABs with active data transmission

RAB_MeanActive_PS384UL

Mean Number of Active RABs for 384kbps UL Data Rate

Data Source

RNC

Source Field

VS.RAB.MeanActive.PS384UL

Source Section

Mean Number of RABs with active data transmission

RAB_MeanActive_PS64DL

Mean Number of Active RABs for DL Data Rate of 64 kbps

Data Source

RNC

Source Field

VS.RAB.MeanActive.PS64DL

Source Section

Mean Number of RABs with active data transmission

RAB_MeanActive_PS64UL

Mean Number of Active RABs for UL Data Rate of 64 kbps

Data Source

RNC

Source Field

VS.RAB.MeanActive.PS64UL

Source Section

Mean Number of RABs with active data transmission

RAB_MeanActive_PS8DL

Mean Number of Active RABs for DL Data Rate of 8 kbps

Data Source

RNC

Source Field

VS.RAB.MeanActive.PS8DL

Source Section

Mean Number of RABs with active data transmission

RAB_MeanActive_PS8UL

Mean Number of Active RABs for UL Data Rate of 8 kbps

Data Source

RNC

Source Field

VS.RAB.MeanActive.PS8UL

Source Section

Mean Number of RABs with active data transmission

RAB_MeanActive_Strm_DCH

Renamed 4.3.7.0.10 - new name:RAB_MeanActive_Strm_DCH_DCH. Mean Number of Active DL RABs on DCH for QoS Class Streaming

Data Source

RNC

Source Field

VS.RAB.MeanActive.Strm.DCH

Source Section

Mean Number of RABs with active data transmission

RAB_MeanActive_Strm_DCH_DCH

Mean Number of Active DL RABs per QoS Class on DCH / HSDSCH - Streaming per DCH usage in the DL

Data Source

RNC

Source Field

VS.RAB.MeanActive.Strm.DCH_DCH

Source Section

RncFunction

RAB_MeanActive_Strm_DCH_HSDSCH

Mean Number of Active DL RABs per QoS Class on DCH / HSDSCH

Data Source

RNC

Source Field

VS.RAB.MeanActive.Strm.DCH_HSDSCH

Source Section

RncFunction

RAB_RelPS_MinRate_Strm

PS Streaming RAB Release due to Poor UE Power / Quality with UE being on Minimum Rate

Data Source

RNC

Source Field

RAB.RelPS.MinRate.Strm

Source Section

RAB Release

RAB_RelPS_Multiple

RNC Initiated RAB Releases for Multiple I/B PS RAB

Data Source

RNC

Source Field

RAB.RelPS.Multiple

Source Section

RAB Release

RAB_RelPS_Multiple_Inactivity

RNC Initiated RAB Releases for Multiple I/B PS RAB due to Inactivity

Data Source

RNC

Source Field

RAB.RelPS.Multiple.Inactivity

Source Section

RAB Release

RAB_RelPS_Reloc_MultipleRAB

RNC Initiated RAB Releases for PS RAB due to Relocation of Multiple RABs

Data Source

RNC

Source Field

RAB.RelPS.Reloc.MultipleRAB

Source Section

RncFunction

RAB_RelPS_sum

RNC Initiated RAB Releases for PS domain

Data Source

RNC

Source Field

RAB.RelPS.sum

Source Section

RAB Release

RabAssignmentModifFailureAnyAmrToCSData

Number of RAB modifications failure to switch between the Video Telephony service to Speech service, or vice versa. (AnyAmrToCSData)

Data Source

RNC C-Node

Source Field

VS.RabAssignmentModifFailure.AnyAmrToCSData

Source Section

RncEquipment

RabAssignmentModifFailureCSDataToAnyAmr

Number of RAB modifications failure to switch between the Video Telephony service to Speech service, or vice versa. (CSDataToAnyAmr)

Data Source

RNC C-Node

Source Field

VS.RabAssignmentModifFailure.CSDataToAnyAmr

Source Section

RncEquipment

RabAssignmentModifSucAnyAmrToCSData

Number of successful RAB modifications to switch between the Video Telephony service to Speech service, or vice versa. (AnyAmrToCSData)

Data Source

RNC C-Node

Source Field

VS.RabAssignmentModifSuc.AnyAmrToCSData

Source Section

RncEquipment

RabAssignmentModifSucCSDataToAnyAmr

Number of successful RAB modifications to switch between the Video Telephony service to Speech service, or vice versa. (CSDataToAnyAmr)

Data Source

RNC C-Node

Source Field

VS.RabAssignmentModifSuc.CSDataToAnyAmr

Source Section

RncEquipment

RabAssignmentReleaseSuccessReqRabCsConv64

Number of RAB assignment successfully release (count per Rabid, and not per message). This counter should also be pegged when the RNC releases the RAB resources of a call that has been relocated on another RNC or system (outgoing relocation). (ReqRabCsConv64)

Data Source

RNC C-Node

Source Field

VS.RabAssignmentReleaseSuccess.ReqRabCsConv64

Source Section

RncEquipment

RabAssignmentReleaseSuccessReqRabCsSpeechConv

Number of RAB assignment successfully release (count per Rabid, and not per message). This counter should also be pegged when the RNC releases the RAB resources of a call that has been relocated on another RNC or system (outgoing relocation). (ReqRabCsSpeechConv)

Data Source

RNC C-Node

Source Field

VS.RabAssignmentReleaseSuccess.ReqRabCsSpeechConv

Source Section

RncEquipment

RabAssignmentReleaseSuccessReqRabCsStr

Number of RAB assignment successfully release (count per Rabid, and not per message). This counter should also be pegged when the RNC releases the RAB resources of a call that has been relocated on another RNC or system (outgoing relocation). (ReqRabCsStr)

Data Source

RNC C-Node

Source Field

VS.RabAssignmentReleaseSuccess.ReqRabCsStr

Source Section

RncEquipment

RabAssignmentReleaseSuccessReqRabOther

Number of RAB assignment successfully release (count per Rabid, and not per message). This counter should also be pegged when the RNC releases the RAB resources of a call that has been relocated on another RNC or system (outgoing relocation). (ReqRabOther)

Data Source

RNC C-Node

Source Field

VS.RabAssignmentReleaseSuccess.ReqRabOther

Source Section

RncEquipment

RabAssignmentReleaseSuccessReqRabPsHighRateBgnd

Number of RAB assignment successfully release (count per Rabid, and not per message). This counter should also be pegged when the RNC releases the RAB resources of a call that has been relocated on another RNC or system (outgoing relocation). (ReqRabPsHighRateBgnd)

Data Source

RNC C-Node

Source Field

VS.RabAssignmentReleaseSuccess.ReqRabPsHighRateBgnd

Source Section

RncEquipment

RabAssignmentReleaseSuccessReqRabPsHighRateInter

Number of RAB assignment successfully release (count per Rabid, and not per message). This counter should also be pegged when the RNC releases the RAB resources of a call that has been relocated on another RNC or system (outgoing relocation). (ReqRabPsHighRateInter)

Data Source

RNC C-Node

Source Field

VS.RabAssignmentReleaseSuccess.ReqRabPsHighRateInter

Source Section

RncEquipment

RabAssignmentReleaseSuccessReqRabPsLowRateBgnd

Number of RAB assignment successfully release (count per Rabid, and not per message). This counter should also be pegged when the RNC releases the RAB resources of a call that has been relocated on another RNC or system (outgoing relocation). (ReqRabPsLowRateBgnd)

Data Source

RNC C-Node

Source Field

VS.RabAssignmentReleaseSuccess.ReqRabPsLowRateBgnd

Source Section

RncEquipment

RabAssignmentReleaseSuccessReqRabPsLowRateInter

Number of RAB assignment successfully release (count per Rabid, and not per message). This counter should also be pegged when the RNC releases the RAB resources of a call that has been relocated on another RNC or system (outgoing relocation). (ReqRabPsLowRateInter)

Data Source

RNC C-Node

Source Field

VS.RabAssignmentReleaseSuccess.ReqRabPsLowRateInter

Source Section

RncEquipment

RabAssignmentReleaseSuccessReqRabPsStrHiRateStr

Number of RAB assignment successfully release (count per Rabid, and not per message). This counter should also be pegged when the RNC releases the RAB resources of a call that has been relocated on another RNC or system (outgoing relocation). (ReqRabPsStrHiRateStr)

Data Source

RNC C-Node

Source Field

VS.RabAssignmentReleaseSuccess.ReqRabPsStrHiRateStr

Source Section

RncEquipment

RabAssignmentReleaseSuccessReqRabPsStrLowRateStr

Number of RAB assignment successfully release (count per Rabid, and not per message). This counter should also be pegged when the RNC releases the RAB resources of a call that has been relocated on another RNC or system (outgoing relocation). (ReqRabPsStrLowRateStr)

Data Source

RNC C-Node

Source Field

VS.RabAssignmentReleaseSuccess.ReqRabPsStrLowRateStr

Source Section

RncEquipment

RabAssignmentReleaseUnsuccessReqRabCsConv64

Number of RAB assignment unsuccessfully released (per Rabid, and not per message). This counter should also be pegged when the RNC fails to release the RAB resources of a call that has been relocated on another RNC or system (outgoing relocation). (ReqRabCsConv64)

Data Source

RNC C-Node

Source Field

VS.RabAssignmentReleaseUnsuccess.ReqRabCsConv64

Source Section

RncEquipment

RabAssignmentReleaseUnsuccessReqRabCsSpeechConv

Number of RAB assignment unsuccessfully released (per Rabid, and not per message). This counter should also be pegged when the RNC fails to release the RAB resources of a call that has been relocated on another RNC or system (outgoing relocation). (ReqRabCsSpeechConv)

Data Source

RNC C-Node

Source Field

VS.RabAssignmentReleaseUnsuccess.ReqRabCsSpeechConv

Source Section

RncEquipment

RabAssignmentReleaseUnsuccessReqRabCsStr

Number of RAB assignment unsuccessfully released (per Rabid, and not per message). This counter should also be pegged when the RNC fails to release the RAB resources of a call that has been relocated on another RNC or system (outgoing relocation). (ReqRabCsStr)

Data Source

RNC C-Node

Source Field

VS.RabAssignmentReleaseUnsuccess.ReqRabCsStr

Source Section

RncEquipment

RabAssignmentReleaseUnsuccessReqRabOther

Number of RAB assignment unsuccessfully released (per Rabid, and not per message). This counter should also be pegged when the RNC fails to release the RAB resources of a call that has been relocated on another RNC or system (outgoing relocation). (ReqRabOther)

Data Source

RNC C-Node

Source Field

VS.RabAssignmentReleaseUnsuccess.ReqRabOther

Source Section

RncEquipment

RabAssignmentReleaseUnsuccessReqRabPsHighRateBgnd

Number of RAB assignment unsuccessfully released (per Rabid, and not per message). This counter should also be pegged when the RNC fails to release the RAB resources of a call that has been relocated on another RNC or system (outgoing relocation). (ReqRabPsHighRateBgnd)

Data Source

RNC C-Node

Source Field

VS.RabAssignmentReleaseUnsuccess.ReqRabPsHighRateBgnd

Source Section

RncEquipment

RabAssignmentReleaseUnsuccessReqRabPsHighRateInter

Number of RAB assignment unsuccessfully released (per Rabid, and not per message). This counter should also be pegged when the RNC fails to release the RAB resources of a call that has been relocated on another RNC or system (outgoing relocation). (ReqRabPsHighRateInter)

Data Source

RNC C-Node

Source Field

VS.RabAssignmentReleaseUnsuccess.ReqRabPsHighRateInter

Source Section

RncEquipment

RabAssignmentReleaseUnsuccessReqRabPsLowRateBgnd

Number of RAB assignment unsuccessfully released (per Rabid, and not per message). This counter should also be pegged when the RNC fails to release the RAB resources of a call that has been relocated on another RNC or system (outgoing relocation). (ReqRabPsLowRateBgnd)

Data Source

RNC C-Node

Source Field

VS.RabAssignmentReleaseUnsuccess.ReqRabPsLowRateBgnd

Source Section

RncEquipment

RabAssignmentReleaseUnsuccessReqRabPsLowRateInter

Number of RAB assignment unsuccessfully released (per Rabid, and not per message). This counter should also be pegged when the RNC fails to release the RAB resources of a call that has been relocated on another RNC or system (outgoing relocation). (ReqRabPsLowRateInter)

Data Source

RNC C-Node

Source Field

VS.RabAssignmentReleaseUnsuccess.ReqRabPsLowRateInter

Source Section

RncEquipment

RabAssignmentReleaseUnsuccessReqRabPsStrHiRateStr

Number of RAB assignment unsuccessfully released (per Rabid, and not per message). This counter should also be pegged when the RNC fails to release the RAB resources of a call that has been relocated on another RNC or system (outgoing relocation). (ReqRabPsStrHiRateStr)

Data Source

RNC C-Node

Source Field

VS.RabAssignmentReleaseUnsuccess.ReqRabPsStrHiRateStr

Source Section

RncEquipment

RabAssignmentReleaseUnsuccessReqRabPsStrLowRateStr

Number of RAB assignment unsuccessfully released (per Rabid, and not per message). This counter should also be pegged when the RNC fails to release the RAB resources of a call that has been relocated on another RNC or system (outgoing relocation). (ReqRabPsStrLowRateStr)

Data Source

RNC C-Node

Source Field

VS.RabAssignmentReleaseUnsuccess.ReqRabPsStrLowRateStr

Source Section

RncEquipment

RabAssignmentRequestUeCapabilitiesCheckAcceptDlAndUlDowngraded

Number of times a Rab Assignment Request (RAB SetUp/Addition/Modify) was accepted but downgraded due to the UE Radio Acces Capabilities Check (DlAndUlDowngraded)

Data Source

RNC C-Node

Source Field

VS.RabAssignmentRequestUeCapabilitiesCheckAccept.DlAndUlDowngraded

Source Section

RncEquipment

RabAssignmentRequestUeCapabilitiesCheckAcceptDlDowngraded

Number of times a Rab Assignment Request (RAB SetUp/Addition/Modify) was accepted but downgraded due to the UE Radio Acces Capabilities Check (DlDowngraded)

Data Source

RNC C-Node

Source Field

VS.RabAssignmentRequestUeCapabilitiesCheckAccept.DlDowngraded

Source Section

RncEquipment

RabAssignmentRequestUeCapabilitiesCheckAcceptUlDowngraded

Number of times a Rab Assignment Request (RAB SetUp/Addition/Modify) was accepted but downgraded due to the UE Radio Acces Capabilities Check (UlDowngraded)

Data Source

RNC C-Node

Source Field

VS.RabAssignmentRequestUeCapabilitiesCheckAccept.UlDowngraded

Source Section

RncEquipment

RabAssignmentRequestUeCapabilitiesCheckFailure

Number of times a Rab Assignment Request (Rab Setup/Addition/Modify) was rejected due to the UE Radio Access Capabilities Check.
(RabAssignmentRequestUeCapabilitiesCheckFailure)

Data Source

RNC C-Node

Source Field

VS.RabAssignmentRequestUeCapabilitiesCheckFailure

Source Section

RncEquipment

RabAssignmentSetupUnsuccessReqRabCsConv64

Number of RAB assignment unsuccessfully setup (per Rabid, and not per message). This counter should also be pegged when a RAB fails to be allocated for an incoming relocation. (ReqRabCsConv64)

Data Source

RNC C-Node

Source Field

VS.RabAssignmentSetupUnsuccess.ReqRabCsConv64

Source Section

RncEquipment

RabAssignmentSetupUnsuccessReqRabCsSpeechConv

Number of RAB assignment unsuccessfully setup (per Rabid, and not per message). This counter should also be pegged when a RAB fails to be allocated for an incoming relocation. (ReqRabCsSpeechConv)

Data Source

RNC C-Node

Source Field

VS.RabAssignmentSetupUnsuccess.ReqRabCsSpeechConv

Source Section

RncEquipment

RabAssignmentSetupUnsuccessReqRabCsStr

Number of RAB assignment unsuccessfully setup (per Rabid, and not per message). This counter should also be pegged when a RAB fails to be allocated for an incoming relocation. (ReqRabCsStr)

Data Source

RNC C-Node

Source Field

VS.RabAssignmentSetupUnsuccess.ReqRabCsStr

Source Section

RncEquipment

RabAssignmentSetupUnsuccessReqRabOther

Number of RAB assignment unsuccessfully setup (per Rabid, and not per message). This counter should also be pegged when a RAB fails to be allocated for an incoming relocation. (ReqRabOther)

Data Source

RNC C-Node

Source Field

VS.RabAssignmentSetupUnsuccess.ReqRabOther

Source Section

RncEquipment

RabAssignmentSetupUnsuccessReqRabPsHighRateBgnd

Number of RAB assignment unsuccessfully setup (per Rabid, and not per message). This counter should also be pegged when a RAB fails to be allocated for an incoming relocation. (ReqRabPsHighRateBgnd)

Data Source

RNC C-Node

Source Field

VS.RabAssignmentSetupUnsuccess.ReqRabPsHighRateBgnd

Source Section

RncEquipment

RabAssignmentSetupUnsuccessReqRabPsHighRateInter

Number of RAB assignment unsuccessfully setup (per Rabid, and not per message). This counter should also be pegged when a RAB fails to be allocated for an incoming relocation. (ReqRabPsHighRateInter)

Data Source

RNC C-Node

Source Field

VS.RabAssignmentSetupUnsuccess.ReqRabPsHighRateInter

Source Section

RncEquipment

RabAssignmentSetupUnsuccessReqRabPsLowRateBgnd

Number of RAB assignment unsuccessfully setup (per Rabid, and not per message). This counter should also be pegged when a RAB fails to be allocated for an incoming relocation. (ReqRabPsLowRateBgnd)

Data Source

RNC C-Node

Source Field

VS.RabAssignmentSetupUnsuccess.ReqRabPsLowRateBgnd

Source Section

RncEquipment

RabAssignmentSetupUnsuccessReqRabPsLowRateInter

Number of RAB assignment unsuccessfully setup (per Rabid, and not per message). This counter should also be pegged when a RAB fails to be allocated for an incoming relocation. (ReqRabPsLowRateInter)

Data Source

RNC C-Node

Source Field

VS.RabAssignmentSetupUnsuccess.ReqRabPsLowRateInter

Source Section

RncEquipment

RabAssignmentSetupUnsuccessReqRabPsStrHiRateStr

Number of RAB assignment unsuccessfully setup (per Rabid, and not per message). This counter should also be pegged when a RAB fails to be allocated for an incoming relocation. (ReqRabPsStrHiRateStr)

Data Source

RNC C-Node

Source Field

VS.RabAssignmentSetupUnsuccess.ReqRabPsStrHiRateStr

Source Section

RncEquipment

RabAssignmentSetupUnsuccessReqRabPsStrLowRateStr

Number of RAB assignment unsuccessfully setup (per Rabid, and not per message). This counter should also be pegged when a RAB fails to be allocated for an incoming relocation. (ReqRabPsStrLowRateStr)

Data Source

RNC C-Node

Source Field

VS.RabAssignmentSetupUnsuccess.ReqRabPsStrLowRateStr

Source Section

RncEquipment

RABAttModPSRNCStrmDLCodePwrNotSust

Number of Attempts the RNC makes to SGSN to modify a PS RAB with guaranteed bit rate (DLCodePwrNotSust)

Data Source

RNC C-Node

Source Field

RAB.AttModPSRNC.Strm.DLCodePwrNotSust

Source Section

RncEquipment

RABAttModPSRNCStrmDLcongCtrl

Number of Attempts the RNC makes to SGSN to modify a PS RAB with guaranteed bit rate (DLcongCtrl)

Data Source

RNC C-Node

Source Field

RAB.AttModPSRNC.Strm.DLcongCtrl

Source Section

RncEquipment

RABAttModPSRNCStrmUeTxPwrExcd6A

Number of Attempts the RNC makes to SGSN to modify a PS RAB with guaranteed bit rate (UeTxPwrExcd6A)

Data Source

RNC C-Node

Source Field

RAB.AttModPSRNC.Strm.UeTxPwrExcd6A

Source Section

RncEquipment

RABAttModPSRNCStrmULcongCtrl

Number of Attempts the RNC makes to SGSN to modify a PS RAB with guaranteed bit rate (ULcongCtrl)

Data Source

RNC C-Node

Source Field

RAB.AttModPSRNC.Strm.ULcongCtrl

Source Section

RncEquipment

RabEstablishmentRequestsPerRabTypeReqRabCsConv64

Number of RAB establishment attempts (per Rabid and not per procedure). This counter should also be pegged in case of RAB allocation attempts for incoming relocations. (ReqRabCsConv64)

Data Source

RNC C-Node

Source Field

VS.RabEstablishmentRequestsPerRabType.ReqRabCsConv64

Source Section

RncEquipment

RabEstablishmentRequestsPerRabTypeReqRabCsSpeechConv

Number of RAB establishment attempts (per Rabid and not per procedure). This counter should also be pegged in case of RAB allocation attempts for incoming relocations. (ReqRabCsSpeechConv)

Data Source

RNC C-Node

Source Field

VS.RabEstablishmentRequestsPerRabType.ReqRabCsSpeechConv

Source Section

RncEquipment

RabEstablishmentRequestsPerRabTypeReqRabCsStr

Number of RAB establishment attempts (per Rabid and not per procedure). This counter should also be pegged in case of RAB allocation attempts for incoming relocations. (ReqRabCsStr)

Data Source

RNC C-Node

Source Field

VS.RabEstablishmentRequestsPerRabType.ReqRabCsStr

Source Section

RncEquipment

RabEstablishmentRequestsPerRabTypeReqRabOther

Number of RAB establishment attempts (per Rabid and not per procedure). This counter should also be pegged in case of RAB allocation attempts for incoming relocations. (ReqRabOther)

Data Source

RNC C-Node

Source Field

VS.RabEstablishmentRequestsPerRabType.ReqRabOther

Source Section

RncEquipment

RabEstablishmentRequestsPerRabTypeReqRabPsHighRateBgnd

Number of RAB establishment attempts (per Rabid and not per procedure). This counter should also be pegged in case of RAB allocation attempts for incoming relocations. (ReqRabPsHighRateBgnd)

Data Source

RNC C-Node

Source Field

VS.RabEstablishmentRequestsPerRabType.ReqRabPsHighRateBgnd

Source Section

RncEquipment

RabEstablishmentRequestsPerRabTypeReqRabPsHighRateInter

Number of RAB establishment attempts (per Rabid and not per procedure). This counter should also be pegged in case of RAB allocation attempts for incoming relocations. (ReqRabPsHighRateInter)

Data Source

RNC C-Node

Source Field

VS.RabEstablishmentRequestsPerRabType.ReqRabPsHighRateInter

Source Section

RncEquipment

RabEstablishmentRequestsPerRabTypeReqRabPsLowRateBgnd

Number of RAB establishment attempts (per Rabid and not per procedure). This counter should also be pegged in case of RAB allocation attempts for incoming relocations. (ReqRabPsLowRateBgnd)

Data Source

RNC C-Node

Source Field

VS.RabEstablishmentRequestsPerRabType.ReqRabPsLowRateBgnd

Source Section

RncEquipment

RabEstablishmentRequestsPerRabTypeReqRabPsLowRateInter

Number of RAB establishment attempts (per Rabid and not per procedure). This counter should also be pegged in case of RAB allocation attempts for incoming relocations. (ReqRabPsLowRateInter)

Data Source

RNC C-Node

Source Field

VS.RabEstablishmentRequestsPerRabType.ReqRabPsLowRateInter

Source Section

RncEquipment

RabEstablishmentRequestsPerRabTypeReqRabPsStrHiRateStr

Number of RAB establishment attempts (per Rabid and not per procedure). This counter should also be pegged in case of RAB allocation attempts for incoming relocations. (ReqRabPsStrHiRateStr)

Data Source

RNC C-Node

Source Field

VS.RabEstablishmentRequestsPerRabType.ReqRabPsStrHiRateStr

Source Section

RncEquipment

RabEstablishmentRequestsPerRabTypeReqRabPsStrLowRateStr

Number of RAB establishment attempts (per Rabid and not per procedure). This counter should also be pegged in case of RAB allocation attempts for incoming relocations. (ReqRabPsStrLowRateStr)

Data Source

RNC C-Node

Source Field

VS.RabEstablishmentRequestsPerRabType.ReqRabPsStrLowRateStr

Source Section

RncEquipment

RabEstablishmentSuccessPerGrantedRabTypeGrantedRabCsConv64

Number of successful RAB establishment per granted RAB type (per Rabid and not per procedure). This counter should also be pegged for RAB successfully allocated for incoming relocations (GrantedRabCsConv64)

Data Source

RNC C-Node

Source Field

VS.RabEstablishmentSuccessPerGrantedRabType.GrantedRabCsConv64

Source Section

RncEquipment

RabEstablishmentSuccessPerGrantedRabTypeGrantedRabCSSpeechConv

Number of successful RAB establishment per granted RAB type (per Rabid and not per procedure). This counter should also be pegged for RAB successfully allocated for incoming relocations (GrantedRabCSSpeechConv)

Data Source

RNC C-Node

Source Field

VS.RabEstablishmentSuccessPerGrantedRabType.GrantedRabCSSpeechConv

Source Section

RncEquipment

RabEstablishmentSuccessPerGrantedRabTypeGrantedRabCsStr

Number of successful RAB establishment per granted RAB type (per Rabid and not per procedure). This counter should also be pegged for RAB successfully allocated for incoming relocations (GrantedRabCsStr)

Data Source

RNC C-Node

Source Field

VS.RabEstablishmentSuccessPerGrantedRabType.GrantedRabCsStr

Source Section

RncEquipment

RabEstablishmentSuccessPerGrantedRabTypeGrantedRabOther

Number of successful RAB establishment per granted RAB type (per Rabid and not per procedure). This counter should also be pegged for RAB successfully allocated for incoming relocations (GrantedRabOther)

Data Source

RNC C-Node

Source Field

VS.RabEstablishmentSuccessPerGrantedRabType.GrantedRabOther

Source Section

RncEquipment

RabEstablishmentSuccessPerGrantedRabTypeGrantedRabPsHighRateBgnd

Number of successful RAB establishment per granted RAB type (per Rabid and not per procedure). This counter should also be pegged for RAB successfully allocated for incoming relocations (GrantedRabPsHighRateBgnd)

Data Source

RNC C-Node

Source Field

VS.RabEstablishmentSuccessPerGrantedRabType.GrantedRabPsHighRateBgnd

Source Section

RncEquipment

RabEstablishmentSuccessPerGrantedRabTypeGrantedRabPsHighRateInter

Number of successful RAB establishment per granted RAB type (per Rabid and not per procedure). This counter should also be pegged for RAB successfully allocated for incoming relocations (GrantedRabPsHighRateInter)

Data Source

RNC C-Node

Source Field

VS.RabEstablishmentSuccessPerGrantedRabType.GrantedRabPsHighRateInter

Source Section

RncEquipment

RabEstablishmentSuccessPerGrantedRabTypeGrantedRabPsLowRateBgnd

Number of successful RAB establishment per granted RAB type (per Rabid and not per procedure). This counter should also be pegged for RAB successfully allocated for incoming relocations (GrantedRabPsLowRateBgnd)

Data Source

RNC C-Node

Source Field

VS.RabEstablishmentSuccessPerGrantedRabType.GrantedRabPsLowRateBgnd

Source Section

RncEquipment

RabEstablishmentSuccessPerGrantedRabTypeGrantedRabPsLowRateInter

Number of successful RAB establishment per granted RAB type (per Rabid and not per procedure). This counter should also be pegged for RAB successfully allocated for incoming relocations (GrantedRabPsLowRateInter)

Data Source

RNC C-Node

Source Field

VS.RabEstablishmentSuccessPerGrantedRabType.GrantedRabPsLowRateInter

Source Section

RncEquipment

RabEstablishmentSuccessPerGrantedRabTypeGrantedRabPsStrHiRateStr

Number of successful RAB establishment per granted RAB type (per Rabid and not per procedure). This counter should also be pegged for RAB successfully allocated for incoming relocations (GrantedRabPsStrHiRateStr)

Data Source

RNC C-Node

Source Field

VS.RabEstablishmentSuccessPerGrantedRabType.GrantedRabPsStrHiRateStr

Source Section

RncEquipment

RabEstablishmentSuccessPerGrantedRabTypeGrantedRabPsStrLowRateStr

Number of successful RAB establishment per granted RAB type (per Rabid and not per procedure). This counter should also be pegged for RAB successfully allocated for incoming relocations (GrantedRabPsStrLowRateStr)

Data Source

RNC C-Node

Source Field

VS.RabEstablishmentSuccessPerGrantedRabType.GrantedRabPsStrLowRateStr

Source Section

RncEquipment

RabEstablishmentSuccessPerRequestedRabTypeReqRabCsConv64

Number of successful RAB establishment per requested RAB type (to map the successes with the requests) (per Rabid and not per procedure). This counter should also be pegged for RAB successfully allocated for incoming relocations. (ReqRabCsConv64)

Data Source

RNC C-Node

Source Field

VS.RabEstablishmentSuccessPerRequestedRabType.ReqRabCsConv64

Source Section

RncEquipment

RabEstablishmentSuccessPerRequestedRabTypeReqRabCsSpeechConv

Number of successful RAB establishment per requested RAB type (to map the successes with the requests) (per Rabid and not per procedure). This counter should also be pegged for RAB successfully allocated for incoming relocations. (ReqRabCsSpeechConv)

Data Source

RNC C-Node

Source Field

VS.RabEstablishmentSuccessPerRequestedRabType.ReqRabCsSpeechConv

Source Section

RncEquipment

RabEstablishmentSuccessPerRequestedRabTypeReqRabCsStr

Number of successful RAB establishment per requested RAB type (to map the successes with the requests) (per Rabid and not per procedure). This counter should also be pegged for RAB successfully allocated for incoming relocations. (ReqRabCsStr)

Data Source

RNC C-Node

Source Field

VS.RabEstablishmentSuccessPerRequestedRabType.ReqRabCsStr

Source Section

RncEquipment

RabEstablishmentSuccessPerRequestedRabTypeReqRabOther

Number of successful RAB establishment per requested RAB type (to map the successes with the requests) (per Rabid and not per procedure). This counter should also be pegged for RAB successfully allocated for incoming relocations. (ReqRabOther)

Data Source

RNC C-Node

Source Field

VS.RabEstablishmentSuccessPerRequestedRabType.ReqRabOther

Source Section

RncEquipment

RabEstablishmentSuccessPerRequestedRabTypeReqRabPsHighRateBgnd

Number of successful RAB establishment per requested RAB type (to map the successes with the requests) (per Rabid and not per procedure). This counter should also be pegged for RAB successfully allocated for incoming relocations. (ReqRabPsHighRateBgnd)

Data Source

RNC C-Node

Source Field

VS.RabEstablishmentSuccessPerRequestedRabType.ReqRabPsHighRateBgnd

Source Section

RncEquipment

RabEstablishmentSuccessPerRequestedRabTypeReqRabPsHighRateInter

Number of successful RAB establishment per requested RAB type (to map the successes with the requests) (per Rabid and not per procedure). This counter should also be pegged for RAB successfully allocated for incoming relocations. (ReqRabPsHighRateInter)

Data Source

RNC C-Node

Source Field

VS.RabEstablishmentSuccessPerRequestedRabType.ReqRabPsHighRateInter

Source Section

RncEquipment

RabEstablishmentSuccessPerRequestedRabTypeReqRabPsLowRateBgnd

Number of successful RAB establishment per requested RAB type (to map the successes with the requests) (per Rabid and not per procedure). This counter should also be pegged for RAB successfully allocated for incoming relocations. (ReqRabPsLowRateBgnd)

Data Source

RNC C-Node

Source Field

VS.RabEstablishmentSuccessPerRequestedRabType.ReqRabPsLowRateBgnd

Source Section

RncEquipment

RabEstablishmentSuccessPerRequestedRabTypeReqRabPsLowRateInter

Number of successful RAB establishment per requested RAB type (to map the successes with the requests) (per Rabid and not per procedure). This counter should also be pegged for RAB successfully allocated for incoming relocations. (ReqRabPsLowRateInter)

Data Source

RNC C-Node

Source Field

VS.RabEstablishmentSuccessPerRequestedRabType.ReqRabPsLowRateInter

Source Section

RncEquipment

RabEstablishmentSuccessPerRequestedRabTypeReqRabPsStrHiRateStr

Number of successful RAB establishment per requested RAB type (to map the successes with the requests) (per Rabid and not per procedure). This counter should also be pegged for RAB successfully allocated for incoming relocations. (ReqRabPsStrHiRateStr)

Data Source

RNC C-Node

Source Field

VS.RabEstablishmentSuccessPerRequestedRabType.ReqRabPsStrHiRateStr

Source Section

RncEquipment

RabEstablishmentSuccessPerRequestedRabTypeReqRabPsStrLowRateStr

Number of successful RAB establishment per requested RAB type (to map the successes with the requests) (per Rabid and not per procedure). This counter should also be pegged for RAB successfully allocated for incoming relocations. (ReqRabPsStrLowRateStr)

Data Source

RNC C-Node

Source Field

VS.RabEstablishmentSuccessPerRequestedRabType.ReqRabPsStrLowRateStr

Source Section

RncEquipment

RabModAttPerTChsBkg

Number of RAB modification requested at each current traffic class (hsBkg)

Data Source

RNC C-Node

Source Field

VS.RabModAttPerTC.hsBkg

Source Section

RncEquipment

RabModAttPerTChsInt

Number of RAB modification requested at each current traffic class (hsInt)

Data Source

RNC C-Node

Source Field

VS.RabModAttPerTC.hsInt

Source Section

RncEquipment

RabModAttPerTCpsBkg

Number of RAB modification requested at each current traffic class (psBkg)

Data Source

RNC C-Node

Source Field

VS.RabModAttPerTC.psBkg

Source Section

RncEquipment

RabModAttPerTCpsInt

Number of RAB modification requested at each current traffic class (psInt)

Data Source

RNC C-Node

Source Field

VS.RabModAttPerTC.psInt

Source Section

RncEquipment

RabModifReqARPPL

Number of RAB modification requested (ARPPL)

Data Source

RNC C-Node

Source Field

VS.RabModifReq.ARPPL

Source Section

RncEquipment

RabModifReqGBR

Number of RAB modification requested (GBR)

Data Source

RNC C-Node

Source Field

VS.RabModifReq.GBR

Source Section

RncEquipment

RabModifReqMBR

Number of RAB modification requested (MBR)

Data Source

RNC C-Node

Source Field

VS.RabModifReq.MBR

Source Section

RncEquipment

RabModifReqOther

Number of RAB modification requested (Other)

Data Source

RNC C-Node

Source Field

VS.RabModifReq.Other

Source Section

RncEquipment

RabModifReqTC

Number of RAB modification requested (TC)

Data Source

RNC C-Node

Source Field

VS.RabModifReq.TC

Source Section

RncEquipment

RabModifSuccARPPL

Number of successful RAB modification (ARPPL)

Data Source

RNC C-Node

Source Field

VS.RabModifSucc.ARPPL

Source Section

RncEquipment

RabModifSuccGBR

Number of successful RAB modification (GBR)

Data Source

RNC C-Node

Source Field

VS.RabModifSucc.GBR

Source Section

RncEquipment

RabModifSuccMBR

Number of successful RAB modification (MBR)

Data Source

RNC C-Node

Source Field

VS.RabModifSucc.MBR

Source Section

RncEquipment

RabModifSuccOther

Number of successful RAB modification (Other)

Data Source

RNC C-Node

Source Field

VS.RabModifSucc.Other

Source Section

RncEquipment

RabModifSuccTC

Number of successful RAB modification (TC)

Data Source

RNC C-Node

Source Field

VS.RabModifSucc.TC

Source Section

RncEquipment

RabModSuccPerTChsBkg

Number of successful RAB modification at each current traffic class (hsBkg)

Data Source

RNC C-Node

Source Field

VS.RabModSuccPerTC.hsBkg

Source Section

RncEquipment

RabModSuccPerTChsInt

Number of successful RAB modification at each current traffic class (hsInt)

Data Source

RNC C-Node

Source Field

VS.RabModSuccPerTC.hsInt

Source Section

RncEquipment

RabModSuccPerTCpsBkg

Number of successful RAB modification at each current traffic class (psBkg)

Data Source

RNC C-Node

Source Field

VS.RabModSuccPerTC.psBkg

Source Section

RncEquipment

RabModSuccPerTCpsInt

Number of successful RAB modification at each current traffic class (psInt)

Data Source

RNC C-Node

Source Field

VS.RabModSuccPerTC.psInt

Source Section

RncEquipment

RabNormalReleaseGrantedRabCsConv64

Number of normal RAB release per RAB type (to map the RAB release with the RAB established). This counter is pegged per Rabid. (GrantedRabCsConv64)

Data Source

RNC C-Node

Source Field

VS.RabNormalRelease.GrantedRabCsConv64

Source Section

RncEquipment

RabNormalReleaseGrantedRabCSSpeechConv

Number of normal RAB release per RAB type (to map the RAB release with the RAB established). This counter is pegged per Rabid. (GrantedRabCSSpeechConv)

Data Source

RNC C-Node

Source Field

VS.RabNormalRelease.GrantedRabCSSpeechConv

Source Section

RncEquipment

RabNormalReleaseGrantedRabCsStr

Number of normal RAB release per RAB type (to map the RAB release with the RAB established). This counter is pegged per Rabid. (GrantedRabCsStr)

Data Source

RNC C-Node

Source Field

VS.RabNormalRelease.GrantedRabCsStr

Source Section

RncEquipment

RabNormalReleaseGrantedRabOther

Number of normal RAB release per RAB type (to map the RAB release with the RAB established). This counter is pegged per Rabid. (GrantedRabOther)

Data Source

RNC C-Node

Source Field

VS.RabNormalRelease.GrantedRabOther

Source Section

RncEquipment

RabNormalReleaseGrantedRabPsHighRateBgnd

Number of normal RAB release per RAB type (to map the RAB release with the RAB established). This counter is pegged per Rabid. (GrantedRabPsHighRateBgnd)

Data Source

RNC C-Node

Source Field

VS.RabNormalRelease.GrantedRabPsHighRateBgnd

Source Section

RncEquipment

RabNormalReleaseGrantedRabPsHighRateInter

Number of normal RAB release per RAB type (to map the RAB release with the RAB established). This counter is pegged per Rabid. (GrantedRabPsHighRateInter)

Data Source

RNC C-Node

Source Field

VS.RabNormalRelease.GrantedRabPsHighRateInter

Source Section

RncEquipment

RabNormalReleaseGrantedRabPsLowRateBgnd

Number of normal RAB release per RAB type (to map the RAB release with the RAB established). This counter is pegged per Rabid. (GrantedRabPsLowRateBgnd)

Data Source

RNC C-Node

Source Field

VS.RabNormalRelease.GrantedRabPsLowRateBgnd

Source Section

RncEquipment

RabNormalReleaseGrantedRabPsLowRateInter

Number of normal RAB release per RAB type (to map the RAB release with the RAB established). This counter is pegged per Rabid. (GrantedRabPsLowRateInter)

Data Source

RNC C-Node

Source Field

VS.RabNormalRelease.GrantedRabPsLowRateInter

Source Section

RncEquipment

RabNormalReleaseGrantedRabPsStrHiRateStr

Number of normal RAB release per RAB type (to map the RAB release with the RAB established). This counter is pegged per Rabid. (GrantedRabPsStrHiRateStr)

Data Source

RNC C-Node

Source Field

VS.RabNormalRelease.GrantedRabPsStrHiRateStr

Source Section

RncEquipment

RabNormalReleaseGrantedRabPsStrLowRateStr

Number of normal RAB release per RAB type (to map the RAB release with the RAB established). This counter is pegged per Rabid. (GrantedRabPsStrLowRateStr)

Data Source

RNC C-Node

Source Field

VS.RabNormalRelease.GrantedRabPsStrLowRateStr

Source Section

RncEquipment

RabReleaseRequestGrantedRabCsConv64

Number of RANAP/RAB RELEASE REQUEST sent by RNC to CoreNetwork (per Rabid and not per procedure). (GrantedRabCsConv64)

Data Source

RNC C-Node

Source Field

VS.RabReleaseRequest.GrantedRabCsConv64

Source Section

RncEquipment

RabReleaseRequestGrantedRabCSSpeechConv

Number of RANAP/RAB RELEASE REQUEST sent by RNC to CoreNetwork (per Rabid and not per procedure). (GrantedRabCSSpeechConv)

Data Source

RNC C-Node

Source Field

VS.RabReleaseRequest.GrantedRabCSSpeechConv

Source Section

RncEquipment

RabReleaseRequestGrantedRabCsStr

Number of RANAP/RAB RELEASE REQUEST sent by RNC to CoreNetwork (per Rabid and not per procedure). (GrantedRabCsStr)

Data Source

RNC C-Node

Source Field

VS.RabReleaseRequest.GrantedRabCsStr

Source Section

RncEquipment

RabReleaseRequestGrantedRabOther

Number of RANAP/RAB RELEASE REQUEST sent by RNC to CoreNetwork (per Rabid and not per procedure). (GrantedRabOther)

Data Source

RNC C-Node

Source Field

VS.RabReleaseRequest.GrantedRabOther

Source Section

RncEquipment

RabReleaseRequestGrantedRabPsHighRateBgnd

Number of RANAP/RAB RELEASE REQUEST sent by RNC to CoreNetwork (per Rabid and not per procedure). (GrantedRabPsHighRateBgnd)

Data Source

RNC C-Node

Source Field

VS.RabReleaseRequest.GrantedRabPsHighRateBgnd

Source Section

RncEquipment

RabReleaseRequestGrantedRabPsHighRateInter

Number of RANAP/RAB RELEASE REQUEST sent by RNC to CoreNetwork (per Rabid and not per procedure). (GrantedRabPsHighRateInter)

Data Source

RNC C-Node

Source Field

VS.RabReleaseRequest.GrantedRabPsHighRateInter

Source Section

RncEquipment

RabReleaseRequestGrantedRabPsLowRateBgnd

Number of RANAP/RAB RELEASE REQUEST sent by RNC to CoreNetwork (per Rabid and not per procedure). (GrantedRabPsLowRateBgnd)

Data Source

RNC C-Node

Source Field

VS.RabReleaseRequest.GrantedRabPsLowRateBgnd

Source Section

RncEquipment

RabReleaseRequestGrantedRabPsLowRateInter

Number of RANAP/RAB RELEASE REQUEST sent by RNC to CoreNetwork (per Rabid and not per procedure). (GrantedRabPsLowRateInter)

Data Source

RNC C-Node

Source Field

VS.RabReleaseRequest.GrantedRabPsLowRateInter

Source Section

RncEquipment

RabReleaseRequestGrantedRabPsStrHiRateStr

Number of RANAP/RAB RELEASE REQUEST sent by RNC to CoreNetwork (per Rabid and not per procedure). (GrantedRabPsStrHiRateStr)

Data Source

RNC C-Node

Source Field

VS.RabReleaseRequest.GrantedRabPsStrHiRateStr

Source Section

RncEquipment

RabReleaseRequestGrantedRabPsStrLowRateStr

Number of RANAP/RAB RELEASE REQUEST sent by RNC to CoreNetwork (per Rabid and not per procedure). (GrantedRabPsStrLowRateStr)

Data Source

RNC C-Node

Source Field

VS.RabReleaseRequest.GrantedRabPsStrLowRateStr

Source Section

RncEquipment

RABRelPSMultiple

Number of RAB Release Requests for PS RABs to be released on top of an existing PS RAB. (Multiple)

Data Source

RNC C-Node

Source Field

RAB.RelPS.Multiple

Source Section

RncEquipment

RABRelPSMultipleInactivity

Number of PS RABs released with "RAB Release Request" due to inactivity on top of an existing PS RAB. (Inactivity)

Data Source

RNC C-Node

Source Field

RAB.RelPS.Multiple.Inactivity

Source Section

RncEquipment

ReceivedPagingRequestFromCoreNwCsInvalidLac

Number of received paging requests (FromCoreNwCsInvalidLac)

Data Source

RNC C-Node

Source Field

VS.ReceivedPagingRequest.FromCoreNwCsInvalidLac

Source Section

RncEquipment

ReceivedPagingRequestWithCoreNetworkCs

Number of received paging requests (WithCoreNetworkCs)

Data Source

RNC C-Node

Source Field

VS.ReceivedPagingRequest.WithCoreNetworkCs

Source Section

RncEquipment

ReceivedPagingRequestWithCoreNetworkPs

Number of received paging requests (WithCoreNetworkPs)

Data Source

RNC C-Node

Source Field

VS.ReceivedPagingRequest.WithCoreNetworkPs

Source Section

RncEquipment

ReceivedPagingRequestWithCoreNwPsInvalidRac

Number of received paging requests (WithCoreNwPsInvalidRac)

Data Source

RNC C-Node

Source Field

VS.ReceivedPagingRequest.WithCoreNwPsInvalidRac

Source Section

RncEquipment

ReconfAttEDCHDCHCauseComp

Attempted reconfiguration (fallback) from HSUPA to DCH for compressed mode activation when the UE does not support compressed mode with HSUPA. (CauseComp)

Data Source

RNC C-Node

Source Field

VS.ReconfAtt.EDCH.DCH.CauseComp

Source Section

RncEquipment

ReconfAttHSDSCHDCHCauseComp

Attempted reconfiguration (fallback) from HSDPA to DCH for compressed mode activation when the UE does not support compressed mode with HSDPA. (CauseComp)

Data Source

RNC C-Node

Source Field

VS.ReconfAtt.HSDSCH.DCH.CauseComp

Source Section

RncEquipment

RejectedSmcWithCoreNetworkCs

Number of Security Mode Commands at Iu interface rejected as unsupported / allowed (WithCoreNetworkCs)

Data Source

RNC C-Node

Source Field

VS.RejectedSmc.WithCoreNetworkCs

Source Section

RncEquipment

RejectedSmcWithCoreNetworkPs

Number of Security Mode Commands at Iu interface rejected as unsupported / allowed (WithCoreNetworkPs)

Data Source

RNC C-Node

Source Field

VS.RejectedSmc.WithCoreNetworkPs

Source Section

RncEquipment

RELOC_AttCS_UEInvol

Attempted relocations with UE involved for CS domain

Data Source

RNC

Source Field

RELOC.AttCS.UEInvol

Source Section

Relocations with UE involved for CS domain

RELOC_AttPrepUEInvolCS

Attempted relocation preparations with UE involved for CS domain

Data Source

RNC

Source Field

RELOC.AttPrepUEInvolCS

Source Section

Relocation preparations with UE involved for CS domain

RELOC_AttPrepUEInvolPS

Attempted relocation preparations with UE involved for PS domain

Data Source

RNC

Source Field

RELOC.AttPrepUEInvolPS

Source Section

Relocation preparations with UE involved for PS domain

RELOC_AttPS_UEInvol

Attempted relocations with UE involved for PS domain

Data Source

RNC

Source Field

RELOC.AttPS.UEInvol

Source Section

Relocations with UE involved for PS domain

RELOC_AttResAllocUEInvolCS

Attempted relocations resource allocations with UE involved for CS domain

Data Source

RNC

Source Field

RELOC.AttResAllocUEInvolCS

Source Section

Relocation resource allocations with UE involved for CS domain

RELOC_AttResAllocUEInvolPS

Attempted relocations resource allocations with UE involved for PS domain

Data Source

RNC

Source Field

RELOC.AttResAllocUEInvolPS

Source Section

Relocation resource allocations with UE involved for PS domain

RELOC_FailCS_UEInvol

Failed relocations with UE involved for CS domain

Data Source

RNC

Source Field

RELOC.FailCS.UEInvol

Source Section

Relocations with UE involved for CS domain

RELOC_FailPrepUEInvolCS_FailTarSys

Failed relocation preparations with UE involved for CS domain-Cause:Relocation Failure in Target System

Data Source

RNC

Source Field

RELOC.FailPrepUEInvolCS.FailTarSys

Source Section

Relocation preparations with UE involved for CS domain

RELOC_FailPrepUEInvolCS_NotSupTarSys

Failed relocation preparations with UE involved for CS domain-Cause:Relocation not supported in Target System

Data Source

RNC

Source Field

RELOC.FailPrepUEInvolCS.NotSupTarSys

Source Section

Relocation preparations with UE involved for CS domain

RELOC_FailPrepUEInvolCS_sum

Failed relocation preparations with UE involved for CS domain-Cause:sum(all causes)

Data Source

RNC

Source Field

RELOC.FailPrepUEInvolCS.sum

Source Section

Relocation preparations with UE involved for CS domain

RELOC_FailPrepUEInvolCS_T_RELOCprep_exp

Failed relocation preparations with UE involved for CS domain-Cause:expiry of timer T_RELOCprep

Data Source

RNC

Source Field

RELOC.FailPrepUEInvolCS.T_RELOCprep_exp

Source Section

Relocation preparations with UE involved for CS domain

RELOC_FailPrepUEInvolPS_FailTarSys

Failed relocation preparations with UE involved for PS domain-Cause: Relocation failure in Target System

Data Source

RNC

Source Field

RELOC.FailPrepUEInvolPS.FailTarSys

Source Section

Relocation preparations with UE involved for PS domain

RELOC_FailPrepUEInvolPS_NotSupTarSys

Failed relocation preparations with UE involved for PS domain-Cause: Relocation not supported in Target System

Data Source

RNC

Source Field

RELOC.FailPrepUEInvolPS.NotSupTarSys

Source Section

Relocation preparations with UE involved for PS domain

RELOC_FailPrepUEInvolPS_sum

Failed relocation preparations with UE involved for PS domain-Cause: sum(all causes)

Data Source

RNC

Source Field

RELOC.FailPrepUEInvolPS.sum

Source Section

Relocation preparations with UE involved for PS domain

RELOC_FailPrepUEInvolPS_T_RELOCprep_exp

Failed relocation preparations with UE involved for PS domain-Cause:expiry of timer T_RELOCprep

Data Source

RNC

Source Field

RELOC.FailPrepUEInvolPS.T_RELOCprep_exp

Source Section

Relocation preparations with UE involved for PS domain

RELOC_FailPS_UEInvol

Failed relocations with UE involved for PS domain

Data Source

RNC

Source Field

RELOC.FailPS.UEInvol

Source Section

Relocations with UE involved for PS domain

RELOC_FailResAllocUEInvolCS_FailTarSys

Failed relocation resource allocations with UE involved for CS domain-Cause: Relocation failure in Target System

Data Source

RNC

Source Field

RELOC.FailResAllocUEInvolCS.FailTarSys

Source Section

Relocation resource allocations with UE involved for CS domain

RELOC_FailResAllocUEInvolCS_NotSupTarSys

Failed relocation resource allocations with UE involved for CS domain-Cause: Relocation not supported in Target System

Data Source

RNC

Source Field

RELOC.FailResAllocUEInvolCS.NotSupTarSys

Source Section

Relocation resource allocations with UE involved for CS domain

RELOC_FailResAllocUEInvolCS_sum

Failed relocation resource allocations with UE involved for CS domain-Cause: sum(all causes)

Data Source

RNC

Source Field

RELOC.FailResAllocUEInvolCS.sum

Source Section

Relocation resource allocations with UE involved for CS domain

RELOC_FailResAllocUEInvolPS_FailTarSys

Failed relocation resource allocations with UE involved for PS domain-Cause: Relocation failure in Target System

Data Source

RNC

Source Field

RELOC.FailResAllocUEInvolPS.FailTarSys

Source Section

Relocation resource allocations with UE involved for PS domain

RELOC_FailResAllocUEInvolPS_NotSupTarSys

Failed relocation resource allocations with UE involved for PS domain-Cause: Relocation not supported in Target System

Data Source

RNC

Source Field

RELOC.FailResAllocUEInvolPS.NotSupTarSys

Source Section

Relocation resource allocations with UE involved for PS domain

RELOC_FailResAllocUEInvolPS_sum

Failed relocation resource allocations with UE involved for PS domain-Cause: sum(all causes)

Data Source

RNC

Source Field

RELOC.FailResAllocUEInvolPS.sum

Source Section

Relocation resource allocations with UE involved for PS domain

RELOC_SuccCS_UEInvol

Successful relocations with UE involved for CS domain

Data Source

RNC

Source Field

RELOC.SuccCS.UEInvol

Source Section

Relocations with UE involved for CS domain

RELOC_SuccPrepUEInvolCS

Successful relocation preparations with UE involved for CS domain

Data Source

RNC

Source Field

RELOC.SuccPrepUEInvolCS

Source Section

Relocation preparations with UE involved for CS domain

RELOC_SuccPrepUEInvolPS

Successful relocation preparations with UE involved for PS domain

Data Source

RNC

Source Field

RELOC.SuccPrepUEInvolPS

Source Section

Relocation preparations with UE involved for PS domain

RELOC_SuccPS_UEInvol

Successful relocations with UE involved for PS domain

Data Source

RNC

Source Field

RELOC.SuccPS.UEInvol

Source Section

Relocations with UE involved for PS domain

RelocFailurebySRNCInterCN

Relocation Failure In SRNC after Successful Relocation Preparations (count) (InterCN)

Data Source

RNC C-Node

Source Field

VS.RelocFailurebySRNC.InterCN

Source Section

RncEquipment

RelocFailurebySRNCIntraCN

Relocation Failure In SRNC after Successful Relocation Preparations (count) (IntraCN)

Data Source

RNC C-Node

Source Field

VS.RelocFailurebySRNC.IntraCN

Source Section

RncEquipment

RelocFailurebyUEInterCN

Relocation Failure by UE (count) (InterCN)

Data Source

RNC C-Node

Source Field

VS.RelocFailurebyUE.InterCN

Source Section

RncEquipment

RelocFailurebyUEIntraCN

Relocation Failure by UE (count) (IntraCN)

Data Source

RNC C-Node

Source Field

VS.RelocFailurebyUE.IntraCN

Source Section

RncEquipment

RESERVED21

Reserving spare counters makes possible to address urgent requirements for new counters.

Data Source

RNC C-Node

Source Field

VS.RESERVED21

Source Section

RncEquipment

RESERVED22

Reserving spare counters makes possible to address urgent requirements for new counters.

Data Source

RNC C-Node

Source Field

VS.RESERVED22

Source Section

RncEquipment

RESERVED23

Reserving spare counters makes possible to address urgent requirements for new counters.

Data Source

RNC C-Node

Source Field

VS.RESERVED23

Source Section

RncEquipment

RESERVED24

Reserving spare counters makes possible to address urgent requirements for new counters.

Data Source

RNC C-Node

Source Field

VS.RESERVED24

Source Section

RncEquipment

RESERVED25

Reserving spare counters makes possible to address urgent requirements for new counters.

Data Source

RNC C-Node

Source Field

VS.RESERVED25

Source Section

RncEquipment

RESERVED26

Reserving spare counters makes possible to address urgent requirements for new counters.

Data Source

RNC C-Node

Source Field

VS.RESERVED26

Source Section

RncEquipment

RESERVED27

Reserving spare counters makes possible to address urgent requirements for new counters.

Data Source

RNC C-Node

Source Field

VS.RESERVED27

Source Section

RncEquipment

RESERVED28

Reserving spare counters makes possible to address urgent requirements for new counters.

Data Source

RNC C-Node

Source Field

VS.RESERVED28

Source Section

RncEquipment

RESERVED29

Reserving spare counters makes possible to address urgent requirements for new counters.

Data Source

RNC C-Node

Source Field

VS.RESERVED29

Source Section

RncEquipment

RESERVED30

Reserving spare counters makes possible to address urgent requirements for new counters.

Data Source

RNC C-Node

Source Field

VS.RESERVED30

Source Section

RncEquipment

rncId

Unique RNC ID (Ref. 3GPP TS 23.003).

Data Source

OMC-U Bulk CM

Source Field

un:rncId

Source Section

RncFunction

RrcAvgNbrCellFachRncFromCellDchAvg

Average number of UEs in CELL_FACH RRC state (Avg)

Data Source

RNC C-Node

Source Field

VS.RrcAvgNbrCellFachRnc.FromCellDch.Avg

Source Section

RncEquipment

RrcAvgNbrCellFachRncFromCellDchCum

Average number of UEs in CELL_FACH RRC state (Cum)

Data Source

RNC C-Node

Source Field

VS.RrcAvgNbrCellFachRnc.FromCellDch.Cum

Source Section

RncEquipment

RrcAvgNbrCellFachRncFromCellDchMax

Average number of UEs in CELL_FACH RRC state (Max)

Data Source

RNC C-Node

Source Field

VS.RrcAvgNbrCellFachRnc.FromCellDch.Max

Source Section

RncEquipment

RrcAvgNbrCellFachRncFromCellDchMin

Average number of UEs in CELL_FACH RRC state (Min)

Data Source

RNC C-Node

Source Field

VS.RrcAvgNbrCellFachRnc.FromCellDch.Min

Source Section

RncEquipment

RrcAvgNbrCellFachRncFromCellDchNbEvt

Average number of UEs in CELL_FACH RRC state (NbEvt)

Data Source

RNC C-Node

Source Field

VS.RrcAvgNbrCellFachRnc.FromCellDch.NbEvt

Source Section

RncEquipment

RrcAvgNbrCellFachRncFromCellPchAvg

Average number of UEs in CELL_FACH RRC state (Avg)

Data Source

RNC C-Node

Source Field

VS.RrcAvgNbrCellFachRnc.FromCellPch.Avg

Source Section

RncEquipment

RrcAvgNbrCellFachRncFromCellPchCum

Average number of UEs in CELL_FACH RRC state (Cum)

Data Source

RNC C-Node

Source Field

VS.RrcAvgNbrCellFachRnc.FromCellPch.Cum

Source Section

RncEquipment

RrcAvgNbrCellFachRncFromCellPchMax

Average number of UEs in CELL_FACH RRC state (Max)

Data Source

RNC C-Node

Source Field

VS.RrcAvgNbrCellFachRnc.FromCellPch.Max

Source Section

RncEquipment

RrcAvgNbrCellFachRncFromCellPchMin

Average number of UEs in CELL_FACH RRC state (Min)

Data Source

RNC C-Node

Source Field

VS.RrcAvgNbrCellFachRnc.FromCellPch.Min

Source Section

RncEquipment

RrcAvgNbrCellFachRncFromCellPchNbEvt

Average number of UEs in CELL_FACH RRC state (NbEvt)

Data Source

RNC C-Node

Source Field

VS.RrcAvgNbrCellFachRnc.FromCellPch.NbEvt

Source Section

RncEquipment

RrcAvgNbrCellFachRncFromUraPchAvg

Average number of UEs in CELL_FACH RRC state (Avg)

Data Source

RNC C-Node

Source Field

VS.RrcAvgNbrCellFachRnc.FromUraPch.Avg

Source Section

RncEquipment

RrcAvgNbrCellFachRncFromUraPchCum

Average number of UEs in CELL_FACH RRC state (Cum)

Data Source

RNC C-Node

Source Field

VS.RrcAvgNbrCellFachRnc.FromUraPch.Cum

Source Section

RncEquipment

RrcAvgNbrCellFachRncFromUraPchMax

Average number of UEs in CELL_FACH RRC state (Max)

Data Source

RNC C-Node

Source Field

VS.RrcAvgNbrCellFachRnc.FromUraPch.Max

Source Section

RncEquipment

RrcAvgNbrCellFachRncFromUraPchMin

Average number of UEs in CELL_FACH RRC state (Min)

Data Source

RNC C-Node

Source Field

VS.RrcAvgNbrCellFachRnc.FromUraPch.Min

Source Section

RncEquipment

RrcAvgNbrCellFachRncFromUraPchNbEvt

Average number of UEs in CELL_FACH RRC state (NbEvt)

Data Source

RNC C-Node

Source Field

VS.RrcAvgNbrCellFachRnc.FromUraPch.NbEvt

Source Section

RncEquipment

RrcAvgNbrCellPchFromCellDchAvg

Average number of UEs in CELL_PCH RRC state (Avg)

Data Source

RNC C-Node

Source Field

VS.RrcAvgNbrCellPch.FromCellDch.Avg

Source Section

RncEquipment

RrcAvgNbrCellPchFromCellDchCum

Average number of UEs in CELL_PCH RRC state (Cum)

Data Source

RNC C-Node

Source Field

VS.RrcAvgNbrCellPch.FromCellDch.Cum

Source Section

RncEquipment

RrcAvgNbrCellPchFromCellDchMax

Average number of UEs in CELL_PCH RRC state (Max)

Data Source

RNC C-Node

Source Field

VS.RrcAvgNbrCellPch.FromCellDch.Max

Source Section

RncEquipment

RrcAvgNbrCellPchFromCellDchMin

Average number of UEs in CELL_PCH RRC state (Min)

Data Source

RNC C-Node

Source Field

VS.RrcAvgNbrCellPch.FromCellDch.Min

Source Section

RncEquipment

RrcAvgNbrCellPchFromCellDchNbEvt

Average number of UEs in CELL_PCH RRC state (NbEvt)

Data Source

RNC C-Node

Source Field

VS.RrcAvgNbrCellPch.FromCellDch.NbEvt

Source Section

RncEquipment

RrcAvgNbrCellPchFromCellFachAvg

Average number of UEs in CELL_PCH RRC state (Avg)

Data Source

RNC C-Node

Source Field

VS.RrcAvgNbrCellPch.FromCellFach.Avg

Source Section

RncEquipment

RrcAvgNbrCellPchFromCellFachCum

Average number of UEs in CELL_PCH RRC state (Cum)

Data Source

RNC C-Node

Source Field

VS.RrcAvgNbrCellPch.FromCellFach.Cum

Source Section

RncEquipment

RrcAvgNbrCellPchFromCellFachMax

Average number of UEs in CELL_PCH RRC state (Max)

Data Source

RNC C-Node

Source Field

VS.RrcAvgNbrCellPch.FromCellFach.Max

Source Section

RncEquipment

RrcAvgNbrCellPchFromCellFachMin

Average number of UEs in CELL_PCH RRC state (Min)

Data Source

RNC C-Node

Source Field

VS.RrcAvgNbrCellPch.FromCellFach.Min

Source Section

RncEquipment

RrcAvgNbrCellPchFromCellFachNbEvt

Average number of UEs in CELL_PCH RRC state (NbEvt)

Data Source

RNC C-Node

Source Field

VS.RrcAvgNbrCellPch.FromCellFach.NbEvt

Source Section

RncEquipment

RrcAvgNbrCellPchFromUraPchAvg

Average number of UEs in CELL_PCH RRC state (Avg)

Data Source

RNC C-Node

Source Field

VS.RrcAvgNbrCellPch.FromUraPch.Avg

Source Section

RncEquipment

RrcAvgNbrCellPchFromUraPchCum

Average number of UEs in CELL_PCH RRC state (Cum)

Data Source

RNC C-Node

Source Field

VS.RrcAvgNbrCellPch.FromUraPch.Cum

Source Section

RncEquipment

RrcAvgNbrCellPchFromUraPchMax

Average number of UEs in CELL_PCH RRC state (Max)

Data Source

RNC C-Node

Source Field

VS.RrcAvgNbrCellPch.FromUraPch.Max

Source Section

RncEquipment

RrcAvgNbrCellPchFromUraPchMin

Average number of UEs in CELL_PCH RRC state (Min)

Data Source

RNC C-Node

Source Field

VS.RrcAvgNbrCellPch.FromUraPch.Min

Source Section

RncEquipment

RrcAvgNbrCellPchFromUraPchNbEvt

Average number of UEs in CELL_PCH RRC state (NbEvt)

Data Source

RNC C-Node

Source Field

VS.RrcAvgNbrCellPch.FromUraPch.NbEvt

Source Section

RncEquipment

RrcAvgNbrUraPchFromCellDchAvg

Average number of UEs in URA_PCH RRC state (Avg)

Data Source

RNC C-Node

Source Field

VS.RrcAvgNbrUraPch.FromCellDch.Avg

Source Section

RncEquipment

RrcAvgNbrUraPchFromCellDchCum

Average number of UEs in URA_PCH RRC state (Cum)

Data Source

RNC C-Node

Source Field

VS.RrcAvgNbrUraPch.FromCellDch.Cum

Source Section

RncEquipment

RrcAvgNbrUraPchFromCellDchMax

Average number of UEs in URA_PCH RRC state (Max)

Data Source

RNC C-Node

Source Field

VS.RrcAvgNbrUraPch.FromCellDch.Max

Source Section

RncEquipment

RrcAvgNbrUraPchFromCellDchMin

Average number of UEs in URA_PCH RRC state (Min)

Data Source

RNC C-Node

Source Field

VS.RrcAvgNbrUraPch.FromCellDch.Min

Source Section

RncEquipment

RrcAvgNbrUraPchFromCellDchNbEvt

Average number of UEs in URA_PCH RRC state (NbEvt)

Data Source

RNC C-Node

Source Field

VS.RrcAvgNbrUraPch.FromCellDch.NbEvt

Source Section

RncEquipment

RrcAvgNbrUraPchFromCellFachAvg

Average number of UEs in URA_PCH RRC state (Avg)

Data Source

RNC C-Node

Source Field

VS.RrcAvgNbrUraPch.FromCellFach.Avg

Source Section

RncEquipment

RrcAvgNbrUraPchFromCellFachCum

Average number of UEs in URA_PCH RRC state (Cum)

Data Source

RNC C-Node

Source Field

VS.RrcAvgNbrUraPch.FromCellFach.Cum

Source Section

RncEquipment

RrcAvgNbrUraPchFromCellFachMax

Average number of UEs in URA_PCH RRC state (Max)

Data Source

RNC C-Node

Source Field

VS.RrcAvgNbrUraPch.FromCellFach.Max

Source Section

RncEquipment

RrcAvgNbrUraPchFromCellFachMin

Average number of UEs in URA_PCH RRC state (Min)

Data Source

RNC C-Node

Source Field

VS.RrcAvgNbrUraPch.FromCellFach.Min

Source Section

RncEquipment

RrcAvgNbrUraPchFromCellFachNbEvt

Average number of UEs in URA_PCH RRC state (NbEvt)

Data Source

RNC C-Node

Source Field

VS.RrcAvgNbrUraPch.FromCellFach.NbEvt

Source Section

RncEquipment

RrcAvgNbrUraPchFromCellPchAvg

Average number of UEs in URA_PCH RRC state (Avg)

Data Source

RNC C-Node

Source Field

VS.RrcAvgNbrUraPch.FromCellPch.Avg

Source Section

RncEquipment

RrcAvgNbrUraPchFromCellPchCum

Average number of UEs in URA_PCH RRC state (Cum)

Data Source

RNC C-Node

Source Field

VS.RrcAvgNbrUraPch.FromCellPch.Cum

Source Section

RncEquipment

RrcAvgNbrUraPchFromCellPchMax

Average number of UEs in URA_PCH RRC state (Max)

Data Source

RNC C-Node

Source Field

VS.RrcAvgNbrUraPch.FromCellPch.Max

Source Section

RncEquipment

RrcAvgNbrUraPchFromCellPchMin

Average number of UEs in URA_PCH RRC state (Min)

Data Source

RNC C-Node

Source Field

VS.RrcAvgNbrUraPch.FromCellPch.Min

Source Section

RncEquipment

RrcAvgNbrUraPchFromCellPchNbEvt

Average number of UEs in URA_PCH RRC state (NbEvt)

Data Source

RNC C-Node

Source Field

VS.RrcAvgNbrUraPch.FromCellPch.NbEvt

Source Section

RncEquipment

RrcNwkTransPchToFachOrDchCellDch

Number of network initiated upsizes from XXX_PCH to CELL_FACH or CELL_DCH (CellDch)

Data Source

RNC C-Node

Source Field

VS.RrcNwkTransPchToFachOrDch.CellDch

Source Section

RncEquipment

RrcNwkTransPchToFachOrDchCellFach

Number of network initiated upsizes from XXX_PCH to CELL_FACH or CELL_DCH (CellFach)

Data Source

RNC C-Node

Source Field

VS.RrcNwkTransPchToFachOrDch.CellFach

Source Section

RncEquipment

RrcTransCellPchToUraPch

Number of transitions from CELL_PCH to URA_PCH (RrcTransCellPchToUraPch)

Data Source

RNC C-Node

Source Field

VS.RrcTransCellPchToUraPch

Source Section

RncEquipment

RrcTransDchToPch

Number of transitions from CELL_DCH to XXX_PCH (RrcTransDchToPch)

Data Source

RNC C-Node

Source Field

VS.RrcTransDchToPch

Source Section

RncEquipment

SmcSuccessWithCoreNetworkCs

Number of successful Security Mode Commands at Iu interface (WithCoreNetworkCs)

Data Source

RNC C-Node

Source Field

VS.SmcSuccess.WithCoreNetworkCs

Source Section

RncEquipment

SmcSuccessWithCoreNetworkPs

Number of successful Security Mode Commands at Iu interface (WithCoreNetworkPs)

Data Source

RNC C-Node

Source Field

VS.SmcSuccess.WithCoreNetworkPs

Source Section

RncEquipment

SuccSCCPConn_CS

Number of Successful Signalling Connection Establishments for CS domain

Data Source

RNC

Source Field

VS.SuccSCCPConn.CS

Source Section

RNC Measurements on Iu Interface

SuccSCCPConn_PS

Number of Successful Signalling Connection Establishments for PS domain

Data Source

RNC

Source Field

VS.SuccSCCPConn.PS

Source Section

RNC Measurements on Iu Interface

UEDlRBRateAdapActivPsRB128D

Number of activation/modification of the traffic monitoring (PsRB128D)

Data Source

RNC C-Node

Source Field

VS.UEDlRBRateAdapActiv.PsRB128D

Source Section

RncEquipment

UEDlRBRateAdapActivPsRB16D

Number of activation/modification of the traffic monitoring (PsRB16D)

Data Source

RNC C-Node

Source Field

VS.UEDlRBRateAdapActiv.PsRB16D

Source Section

RncEquipment

UEDlRBRateAdapActivPsRB256D

Number of activation/modification of the traffic monitoring (PsRB256D)

Data Source

RNC C-Node

Source Field

VS.UEDlRBRateAdapActiv.PsRB256D

Source Section

RncEquipment

UEDlRBRateAdapActivPsRB32D

Number of activation/modification of the traffic monitoring (PsRB32D)

Data Source

RNC C-Node

Source Field

VS.UEDlRBRateAdapActiv.PsRB32D

Source Section

RncEquipment

UEDlRBRateAdapActivPsRB384D

Number of activation/modification of the traffic monitoring (PsRB384D)

Data Source

RNC C-Node

Source Field

VS.UEDlRBRateAdapActiv.PsRB384D

Source Section

RncEquipment

UEDlRBRateAdapActivPsRB64D

Number of activation/modification of the traffic monitoring (PsRB64D)

Data Source

RNC C-Node

Source Field

VS.UEDlRBRateAdapActiv.PsRB64D

Source Section

RncEquipment

UEDlRBRateAdapActivPsRBOtherD

Number of activation/modification of the traffic monitoring (PsRBOtherD)

Data Source

RNC C-Node

Source Field

VS.UEDlRBRateAdapActiv.PsRBOtherD

Source Section

RncEquipment

UEDlRBRateAdapDeactivPsRB128D

Number of deactivation of the traffic monitoring (PsRB128D)

Data Source

RNC C-Node

Source Field

VS.UEDlRBRateAdapDeactiv.PsRB128D

Source Section

RncEquipment

UEDlRBRateAdapDeactivPsRB16D

Number of deactivation of the traffic monitoring (PsRB16D)

Data Source

RNC C-Node

Source Field

VS.UEDlRBRateAdapDeactiv.PsRB16D

Source Section

RncEquipment

UEDlRBRateAdapDeactivPsRB256D

Number of deactivation of the traffic monitoring (PsRB256D)

Data Source

RNC C-Node

Source Field

VS.UEDlRBRateAdapDeactiv.PsRB256D

Source Section

RncEquipment

UEDlRBRateAdapDeactivPsRB32D

Number of deactivation of the traffic monitoring (PsRB32D)

Data Source

RNC C-Node

Source Field

VS.UEDlRBRateAdapDeactiv.PsRB32D

Source Section

RncEquipment

UEDlRBRateAdapDeactivPsRB384D

Number of deactivation of the traffic monitoring (PsRB384D)

Data Source

RNC C-Node

Source Field

VS.UEDlRBRateAdapDeactiv.PsRB384D

Source Section

RncEquipment

UEDlRBRateAdapDeactivPsRB64D

Number of deactivation of the traffic monitoring (PsRB64D)

Data Source

RNC C-Node

Source Field

VS.UEDlRBRateAdapDeactiv.PsRB64D

Source Section

RncEquipment

UEDlRBRateAdapDeactivPsRBOtherD

Number of deactivation of the traffic monitoring (PsRBOtherD)

Data Source

RNC C-Node

Source Field

VS.UEDlRBRateAdapDeactiv.PsRBOtherD

Source Section

RncEquipment

UEDlRBRateAdapDownReqPsRB128D

Number of RB rate downsize triggered by the traffic monitoring. (PsRB128D)

Data Source

RNC C-Node

Source Field

VS.UEDlRBRateAdapDownReq.PsRB128D

Source Section

RncEquipment

UEDlRBRateAdapDownReqPsRB16D

Number of RB rate downsize triggered by the traffic monitoring. (PsRB16D)

Data Source

RNC C-Node

Source Field

VS.UEDlRBRateAdapDownReq.PsRB16D

Source Section

RncEquipment

UEDlRBRateAdapDownReqPsRB256D

Number of RB rate downsize triggered by the traffic monitoring. (PsRB256D)

Data Source

RNC C-Node

Source Field

VS.UEDlRBRateAdapDownReq.PsRB256D

Source Section

RncEquipment

UEDlRBRateAdapDownReqPsRB32D

Number of RB rate downsize triggered by the traffic monitoring. (PsRB32D)

Data Source

RNC C-Node

Source Field

VS.UEDlRBRateAdapDownReq.PsRB32D

Source Section

RncEquipment

UEDlRBRateAdapDownReqPsRB384D

Number of RB rate downsize triggered by the traffic monitoring. (PsRB384D)

Data Source

RNC C-Node

Source Field

VS.UEDlRBRateAdapDownReq.PsRB384D

Source Section

RncEquipment

UEDlRBRateAdapDownReqPsRB64D

Number of RB rate downsize triggered by the traffic monitoring. (PsRB64D)

Data Source

RNC C-Node

Source Field

VS.UEDlRBRateAdapDownReq.PsRB64D

Source Section

RncEquipment

UEDlRBRateAdapDownReqPsRBOtherD

Number of RB rate downsize triggered by the traffic monitoring. (PsRBOtherD)

Data Source

RNC C-Node

Source Field

VS.UEDlRBRateAdapDownReq.PsRBOtherD

Source Section

RncEquipment

UEDlRBRateAdapDownSuccPsRB128D

Number of RB Reconfiguration Success resulting from the RB rate downsize (PsRB128D)

Data Source

RNC C-Node

Source Field

VS.UEDlRBRateAdapDownSucc.PsRB128D

Source Section

RncEquipment

UEDlRBRateAdapDownSuccPsRB16D

Number of RB Reconfiguration Success resulting from the RB rate downsize (PsRB16D)

Data Source

RNC C-Node

Source Field

VS.UEDlRBRateAdapDownSucc.PsRB16D

Source Section

RncEquipment

UEDlRBRateAdapDownSuccPsRB256D

Number of RB Reconfiguration Success resulting from the RB rate downsize (PsRB256D)

Data Source

RNC C-Node

Source Field

VS.UEDlRBRateAdapDownSucc.PsRB256D

Source Section

RncEquipment

UEDlRBRateAdapDownSuccPsRB32D

Number of RB Reconfiguration Success resulting from the RB rate downsize (PsRB32D)

Data Source

RNC C-Node

Source Field

VS.UEDlRBRateAdapDownSucc.PsRB32D

Source Section

RncEquipment

UEDlRBRateAdapDownSuccPsRB384D

Number of RB Reconfiguration Success resulting from the RB rate downsize (PsRB384D)

Data Source

RNC C-Node

Source Field

VS.UEDlRBRateAdapDownSucc.PsRB384D

Source Section

RncEquipment

UEDlRBRateAdapDownSuccPsRB64D

Number of RB Reconfiguration Success resulting from the RB rate downsize (PsRB64D)

Data Source

RNC C-Node

Source Field

VS.UEDlRBRateAdapDownSucc.PsRB64D

Source Section

RncEquipment

UEDlRBRateAdapDownSuccPsRBOtherD

Number of RB Reconfiguration Success resulting from the RB rate downsize (PsRBOtherD)

Data Source

RNC C-Node

Source Field

VS.UEDlRBRateAdapDownSucc.PsRBOtherD

Source Section

RncEquipment

UEDlRBRateAdapUpReqPsRB128D

Number of RB rate upsize triggered by the traffic monitoring. (PsRB128D)

Data Source

RNC C-Node

Source Field

VS.UEDlRBRateAdapUpReq.PsRB128D

Source Section

RncEquipment

UEDlRBRateAdapUpReqPsRB16D

Number of RB rate upsize triggered by the traffic monitoring. (PsRB16D)

Data Source

RNC C-Node

Source Field

VS.UEDlRBRateAdapUpReq.PsRB16D

Source Section

RncEquipment

UEDlRBRateAdapUpReqPsRB256D

Number of RB rate upsize triggered by the traffic monitoring. (PsRB256D)

Data Source

RNC C-Node

Source Field

VS.UEDlRBRateAdapUpReq.PsRB256D

Source Section

RncEquipment

UEDlRBRateAdapUpReqPsRB32D

Number of RB rate upsize triggered by the traffic monitoring. (PsRB32D)

Data Source

RNC C-Node

Source Field

VS.UEDlRBRateAdapUpReq.PsRB32D

Source Section

RncEquipment

UEDlRBRateAdapUpReqPsRB384D

Number of RB rate upsize triggered by the traffic monitoring. (PsRB384D)

Data Source

RNC C-Node

Source Field

VS.UEDlRBRateAdapUpReq.PsRB384D

Source Section

RncEquipment

UEDlRBRateAdapUpReqPsRB64D

Number of RB rate upsize triggered by the traffic monitoring. (PsRB64D)

Data Source

RNC C-Node

Source Field

VS.UEDlRBRateAdapUpReq.PsRB64D

Source Section

RncEquipment

UEDlRBRateAdapUpReqPsRBOtherD

Number of RB rate upsize triggered by the traffic monitoring. (PsRBOtherD)

Data Source

RNC C-Node

Source Field

VS.UEDlRBRateAdapUpReq.PsRBOtherD

Source Section

RncEquipment

UEDlRBRateAdapUpSuccPsRB128D

Number of RB Reconfiguration Success resulting from the RB rate upsize (PsRB128D)

Data Source

RNC C-Node

Source Field

VS.UEDlRBRateAdapUpSucc.PsRB128D

Source Section

RncEquipment

UEDlRBRateAdapUpSuccPsRB16D

Number of RB Reconfiguration Success resulting from the RB rate upsize (PsRB16D)

Data Source

RNC C-Node

Source Field

VS.UEDlRBRateAdapUpSucc.PsRB16D

Source Section

RncEquipment

UEDlRBRateAdapUpSuccPsRB256D

Number of RB Reconfiguration Success resulting from the RB rate upsize (PsRB256D)

Data Source

RNC C-Node

Source Field

VS.UEDlRBRateAdapUpSucc.PsRB256D

Source Section

RncEquipment

UEDlRBRateAdapUpSuccPsRB32D

Number of RB Reconfiguration Success resulting from the RB rate upsize (PsRB32D)

Data Source

RNC C-Node

Source Field

VS.UEDlRBRateAdapUpSucc.PsRB32D

Source Section

RncEquipment

UEDlRBRateAdapUpSuccPsRB384D

Number of RB Reconfiguration Success resulting from the RB rate upsize (PsRB384D)

Data Source

RNC C-Node

Source Field

VS.UEDlRBRateAdapUpSucc.PsRB384D

Source Section

RncEquipment

UEDlRBRateAdapUpSuccPsRB64D

Number of RB Reconfiguration Success resulting from the RB rate upsize (PsRB64D)

Data Source

RNC C-Node

Source Field

VS.UEDlRBRateAdapUpSucc.PsRB64D

Source Section

RncEquipment

UEDlRBRateAdapUpSuccPsRBOtherD

Number of RB Reconfiguration Success resulting from the RB rate upsize (PsRBOtherD)

Data Source

RNC C-Node

Source Field

VS.UEDlRBRateAdapUpSucc.PsRBOtherD

Source Section

RncEquipment

UeInvRelocPrepAttInterCN

Attempted Relocation Preparations (UE Involved) (InterCN)

Data Source

RNC C-Node

Source Field

VS.UeInvRelocPrepAtt.InterCN

Source Section

RncEquipment

UeInvRelocPrepAttIntraCN

Attempted Relocation Preparations (UE Involved) (IntraCN)

Data Source

RNC C-Node

Source Field

VS.UeInvRelocPrepAtt.IntraCN

Source Section

RncEquipment

UeInvRelocPrepFailureInterCN

Failed Relocation Preparations (UE Involved) (InterCN)

Data Source

RNC C-Node

Source Field

VS.UeInvRelocPrepFailure.InterCN

Source Section

RncEquipment

UeInvRelocPrepFailureIntraCN

Failed Relocation Preparations (UE Involved) (IntraCN)

Data Source

RNC C-Node

Source Field

VS.UeInvRelocPrepFailure.IntraCN

Source Section

RncEquipment

UeInvRelocPrepSuccInterCN

Successful Relocation Preparations (UE Involved) (InterCN)

Data Source

RNC C-Node

Source Field

VS.UeInvRelocPrepSucc.InterCN

Source Section

RncEquipment

UeInvRelocPrepSuccIntraCN

Successful Relocation Preparations (UE Involved) (IntraCN)

Data Source

RNC C-Node

Source Field

VS.UeInvRelocPrepSucc.IntraCN

Source Section

RncEquipment

UeInvRelocSuccInterCN

Successful Relocations (UE Involved) (InterCN)

Data Source

RNC C-Node

Source Field

VS.UeInvRelocSucc.InterCN

Source Section

RncEquipment

UeInvRelocSuccIntraCN

Successful Relocations (UE Involved) (IntraCN)

Data Source

RNC C-Node

Source Field

VS.UeInvRelocSucc.IntraCN

Source Section

RncEquipment

UEStateTransFail_Non_Cell_FACH_UE

Number of Failed RB Reconfiguration Attempts due to UE non supporting Cell FACH

Data Source

RNC

Source Field

VS.UEStateTransFail.Non_Cell_FACH_UE

Source Section

UE State Transition Performance Measurements

UEStateTransFail_Non_URA_PCH_UE

Number of Failed RB Reconfiguration Attempts due to Non-URA_PCH UE detected

Data Source

RNC

Source Field

VS.UEStateTransFail.Non_URA_PCH_UE

Source Section

UE State Transition Performance Measurements

UEUlRBRateAdapActivPsRB128U

Number of activation/modification of the traffic monitoring (PsRB128U)

Data Source

RNC C-Node

Source Field

VS.UEUlRBRateAdapActiv.PsRB128U

Source Section

RncEquipment

UEUlRBRateAdapActivPsRB16U

Number of activation/modification of the traffic monitoring (PsRB16U)

Data Source

RNC C-Node

Source Field

VS.UEUlRBRateAdapActiv.PsRB16U

Source Section

RncEquipment

UEUlRBRateAdapActivPsRB32U

Number of activation/modification of the traffic monitoring (PsRB32U)

Data Source

RNC C-Node

Source Field

VS.UEUlRBRateAdapActiv.PsRB32U

Source Section

RncEquipment

UEUlRBRateAdapActivPsRB384U

Number of activation/modification of the traffic monitoring (PsRB384U)

Data Source

RNC C-Node

Source Field

VS.UEUlRBRateAdapActiv.PsRB384U

Source Section

RncEquipment

UEUlRBRateAdapActivPsRB64U

Number of activation/modification of the traffic monitoring (PsRB64U)

Data Source

RNC C-Node

Source Field

VS.UEUlRBRateAdapActiv.PsRB64U

Source Section

RncEquipment

UEUlRBRateAdapActivPsRBOtherU

Number of activation/modification of the traffic monitoring (PsRBOtherU)

Data Source

RNC C-Node

Source Field

VS.UEUlRBRateAdapActiv.PsRBOtherU

Source Section

RncEquipment

UEUlRBRateAdapDeactivPsRB128U

Number of deactivation of the traffic monitoring (PsRB128U)

Data Source

RNC C-Node

Source Field

VS.UEUlRBRateAdapDeactiv.PsRB128U

Source Section

RncEquipment

UEUlRBRateAdapDeactivPsRB16U

Number of deactivation of the traffic monitoring (PsRB16U)

Data Source

RNC C-Node

Source Field

VS.UEUlRBRateAdapDeactiv.PsRB16U

Source Section

RncEquipment

UEUlRBRateAdapDeactivPsRB32U

Number of deactivation of the traffic monitoring (PsRB32U)

Data Source

RNC C-Node

Source Field

VS.UEUlRBRateAdapDeactiv.PsRB32U

Source Section

RncEquipment

UEUlRBRateAdapDeactivPsRB384U

Number of deactivation of the traffic monitoring (PsRB384U)

Data Source

RNC C-Node

Source Field

VS.UEUlRBRateAdapDeactiv.PsRB384U

Source Section

RncEquipment

UEUlRBRateAdapDeactivPsRB64U

Number of deactivation of the traffic monitoring (PsRB64U)

Data Source

RNC C-Node

Source Field

VS.UEUlRBRateAdapDeactiv.PsRB64U

Source Section

RncEquipment

UEUlRBRateAdapDeactivPsRBOtherU

Number of deactivation of the traffic monitoring (PsRBOtherU)

Data Source

RNC C-Node

Source Field

VS.UEUlRBRateAdapDeactiv.PsRBOtherU

Source Section

RncEquipment

UEUlRBRateAdapDownReqPsRB128U

Number of RB rate downsize triggered by the traffic monitoring. (PsRB128U)

Data Source

RNC C-Node

Source Field

VS.UEUlRBRateAdapDownReq.PsRB128U

Source Section

RncEquipment

UEUlRBRateAdapDownReqPsRB16U

Number of RB rate downsize triggered by the traffic monitoring. (PsRB16U)

Data Source

RNC C-Node

Source Field

VS.UEUlRBRateAdapDownReq.PsRB16U

Source Section

RncEquipment

UEUlRBRateAdapDownReqPsRB32U

Number of RB rate downsize triggered by the traffic monitoring. (PsRB32U)

Data Source

RNC C-Node

Source Field

VS.UEUlRBRateAdapDownReq.PsRB32U

Source Section

RncEquipment

UEUlRBRateAdapDownReqPsRB384U

Number of RB rate downsize triggered by the traffic monitoring. (PsRB384U)

Data Source

RNC C-Node

Source Field

VS.UEUlRBRateAdapDownReq.PsRB384U

Source Section

RncEquipment

UEUlRBRateAdapDownReqPsRB64U

Number of RB rate downsize triggered by the traffic monitoring. (PsRB64U)

Data Source

RNC C-Node

Source Field

VS.UEUlRBRateAdapDownReq.PsRB64U

Source Section

RncEquipment

UEUlRBRateAdapDownReqPsRBOtherU

Number of RB rate downsize triggered by the traffic monitoring. (PsRBOtherU)

Data Source

RNC C-Node

Source Field

VS.UEUlRBRateAdapDownReq.PsRBOtherU

Source Section

RncEquipment

UEUlRBRateAdapDownSuccPsRB128U

Number of RB Reconfiguration Success resulting from the RB rate downsize (PsRB128U)

Data Source

RNC C-Node

Source Field

VS.UEUlRBRateAdapDownSucc.PsRB128U

Source Section

RncEquipment

UEUlRBRateAdapDownSuccPsRB16U

Number of RB Reconfiguration Success resulting from the RB rate downsize (PsRB16U)

Data Source

RNC C-Node

Source Field

VS.UEUlRBRateAdapDownSucc.PsRB16U

Source Section

RncEquipment

UEUlRBRateAdapDownSuccPsRB32U

Number of RB Reconfiguration Success resulting from the RB rate downsize (PsRB32U)

Data Source

RNC C-Node

Source Field

VS.UEUlRBRateAdapDownSucc.PsRB32U

Source Section

RncEquipment

UEUlRBRateAdapDownSuccPsRB384U

Number of RB Reconfiguration Success resulting from the RB rate downsize (PsRB384U)

Data Source

RNC C-Node

Source Field

VS.UEUlRBRateAdapDownSucc.PsRB384U

Source Section

RncEquipment

UEUlRBRateAdapDownSuccPsRB64U

Number of RB Reconfiguration Success resulting from the RB rate downsize (PsRB64U)

Data Source

RNC C-Node

Source Field

VS.UEUlRBRateAdapDownSucc.PsRB64U

Source Section

RncEquipment

UEUlRBRateAdapDownSuccPsRBOtherU

Number of RB Reconfiguration Success resulting from the RB rate downsize (PsRBOtherU)

Data Source

RNC C-Node

Source Field

VS.UEUlRBRateAdapDownSucc.PsRBOtherU

Source Section

RncEquipment

UEUlRBRateAdapUpReqPsRB128U

Number of RB rate upsize triggered by the traffic monitoring. (PsRB128U)

Data Source

RNC C-Node

Source Field

VS.UEUlRBRateAdapUpReq.PsRB128U

Source Section

RncEquipment

UEUlRBRateAdapUpReqPsRB16U

Number of RB rate upsize triggered by the traffic monitoring. (PsRB16U)

Data Source

RNC C-Node

Source Field

VS.UEUlRBRateAdapUpReq.PsRB16U

Source Section

RncEquipment

UEUlRBRateAdapUpReqPsRB32U

Number of RB rate upsize triggered by the traffic monitoring. (PsRB32U)

Data Source

RNC C-Node

Source Field

VS.UEUlRBRateAdapUpReq.PsRB32U

Source Section

RncEquipment

UEUlRBRateAdapUpReqPsRB384U

Number of RB rate upsize triggered by the traffic monitoring. (PsRB384U)

Data Source

RNC C-Node

Source Field

VS.UEUlRBRateAdapUpReq.PsRB384U

Source Section

RncEquipment

UEUlRBRateAdapUpReqPsRB64U

Number of RB rate upsize triggered by the traffic monitoring. (PsRB64U)

Data Source

RNC C-Node

Source Field

VS.UEUlRBRateAdapUpReq.PsRB64U

Source Section

RncEquipment

UEUlRBRateAdapUpReqPsRBOtherU

Number of RB rate upsize triggered by the traffic monitoring. (PsRBOtherU)

Data Source

RNC C-Node

Source Field

VS.UEUlRBRateAdapUpReq.PsRBOtherU

Source Section

RncEquipment

UEUlRBRateAdapUpSuccPsRB128U

Number of RB Reconfiguration Success resulting from the RB rate upsize (PsRB128U)

Data Source

RNC C-Node

Source Field

VS.UEUlRBRateAdapUpSucc.PsRB128U

Source Section

RncEquipment

UEUlRBRateAdapUpSuccPsRB16U

Number of RB Reconfiguration Success resulting from the RB rate upsize (PsRB16U)

Data Source

RNC C-Node

Source Field

VS.UEUlRBRateAdapUpSucc.PsRB16U

Source Section

RncEquipment

UEUlRBRateAdapUpSuccPsRB32U

Number of RB Reconfiguration Success resulting from the RB rate upsize (PsRB32U)

Data Source

RNC C-Node

Source Field

VS.UEUlRBRateAdapUpSucc.PsRB32U

Source Section

RncEquipment

UEUlRBRateAdapUpSuccPsRB384U

Number of RB Reconfiguration Success resulting from the RB rate upsize (PsRB384U)

Data Source

RNC C-Node

Source Field

VS.UEUlRBRateAdapUpSucc.PsRB384U

Source Section

RncEquipment

UEUlRBRateAdapUpSuccPsRB64U

Number of RB Reconfiguration Success resulting from the RB rate upsize (PsRB64U)

Data Source

RNC C-Node

Source Field

VS.UEUlRBRateAdapUpSucc.PsRB64U

Source Section

RncEquipment

UEUlRBRateAdapUpSuccPsRBOtherU

Number of RB Reconfiguration Success resulting from the RB rate upsize (PsRBOtherU)

Data Source

RNC C-Node

Source Field

VS.UEUlRBRateAdapUpSucc.PsRBOtherU

Source Section

RncEquipment

UlDiscardNonConfTrafficUlRabCsData64

Counts the number of Kilo Bytes of data discarded by I-Node in UL if the source is non-conformant. This counter is only triggered for non-conformant sources. (UlRabCsData64)

Data Source

RNC C-Node

Source Field

VS.UlDiscardNonConfTraffic.UlRabCsData64

Source Section

RncEquipment

UlDiscardNonConfTrafficUlRabCsSpeech

Counts the number of Kilo Bytes of data discarded by I-Node in UL if the source is non-conformant. This counter is only triggered for non-conformant sources. (UlRabCsSpeech)

Data Source

RNC C-Node

Source Field

VS.UlDiscardNonConfTraffic.UlRabCsSpeech

Source Section

RncEquipment

UlDiscardNonConfTrafficUlRabCsStr

Counts the number of Kilo Bytes of data discarded by I-Node in UL if the source is non-conformant. This counter is only triggered for non-conformant sources. (UlRabCsStr)

Data Source

RNC C-Node

Source Field

VS.UlDiscardNonConfTraffic.UlRabCsStr

Source Section

RncEquipment

UlDiscardNonConfTrafficUlRabHsupa

Counts the number of Kilo Bytes of data discarded by I-Node in UL if the source is non-conformant. This counter is only triggered for non-conformant sources. (UlRabHsupa)

Data Source

RNC C-Node

Source Field

VS.UlDiscardNonConfTraffic.UlRabHsupa

Source Section

RncEquipment

UlDiscardNonConfTrafficUlRabOther

Counts the number of Kilo Bytes of data discarded by I-Node in UL if the source is non-conformant. This counter is only triggered for non-conformant sources. (UlRabOther)

Data Source

RNC C-Node

Source Field

VS.UlDiscardNonConfTraffic.UlRabOther

Source Section

RncEquipment

UlDiscardNonConfTrafficUlRabPsIb128

Counts the number of Kilo Bytes of data discarded by I-Node in UL if the source is non-conformant. This counter is only triggered for non-conformant sources. (UlRabPsIb128)

Data Source

RNC C-Node

Source Field

VS.UlDiscardNonConfTraffic.UlRabPsIb128

Source Section

RncEquipment

UlDiscardNonConfTrafficUlRabPsIb16

Counts the number of Kilo Bytes of data discarded by I-Node in UL if the source is non-conformant. This counter is only triggered for non-conformant sources. (UlRabPsIb16)

Data Source

RNC C-Node

Source Field

VS.UlDiscardNonConfTraffic.UlRabPsIb16

Source Section

RncEquipment

UlDiscardNonConfTrafficUlRabPsIb32

Counts the number of Kilo Bytes of data discarded by I-Node in UL if the source is non-conformant. This counter is only triggered for non-conformant sources. (UlRabPsIb32)

Data Source

RNC C-Node

Source Field

VS.UlDiscardNonConfTraffic.UlRabPsIb32

Source Section

RncEquipment

UlDiscardNonConfTrafficUlRabPsIb384

Counts the number of Kilo Bytes of data discarded by I-Node in UL if the source is non-conformant. This counter is only triggered for non-conformant sources. (UlRabPsIb384)

Data Source

RNC C-Node

Source Field

VS.UlDiscardNonConfTraffic.UlRabPsIb384

Source Section

RncEquipment

UlDiscardNonConfTrafficUlRabPsIb64

Counts the number of Kilo Bytes of data discarded by I-Node in UL if the source is non-conformant. This counter is only triggered for non-conformant sources. (UlRabPsIb64)

Data Source

RNC C-Node

Source Field

VS.UlDiscardNonConfTraffic.UlRabPsIb64

Source Section

RncEquipment

UlDiscardNonConfTrafficUlRabPsIb8

Counts the number of Kilo Bytes of data discarded by I-Node in UL if the source is non-conformant. This counter is only triggered for non-conformant sources. (UlRabPsIb8)

Data Source

RNC C-Node

Source Field

VS.UlDiscardNonConfTraffic.UlRabPsIb8

Source Section

RncEquipment

UlDiscardNonConfTrafficUlRabPsStr16

Counts the number of Kilo Bytes of data discarded by I-Node in UL if the source is non-conformant. This counter is only triggered for non-conformant sources. (UlRabPsStr16)

Data Source

RNC C-Node

Source Field

VS.UlDiscardNonConfTraffic.UlRabPsStr16

Source Section

RncEquipment

UlDiscardNonConfTrafficUlRabPsStr64

Counts the number of Kilo Bytes of data discarded by I-Node in UL if the source is non-conformant. This counter is only triggered for non-conformant sources. (UlRabPsStr64)

Data Source

RNC C-Node

Source Field

VS.UlDiscardNonConfTraffic.UlRabPsStr64

Source Section

RncEquipment

UlDiscardNonConfTrafficUlRabPsStrOther

Counts the number of Kilo Bytes of data discarded by I-Node in UL if the source is non-conformant. This counter is only triggered for non-conformant sources. (UlRabPsStrOther)

Data Source

RNC C-Node

Source Field

VS.UlDiscardNonConfTraffic.UlRabPsStrOther

Source Section

RncEquipment

UlDiscardNonConfTrafficUlRabSRB

Counts the number of Kilo Bytes of data discarded by I-Node in UL if the source is non-conformant. This counter is only triggered for non-conformant sources. (UlRabSRB)

Data Source

RNC C-Node

Source Field

VS.UlDiscardNonConfTraffic.UlRabSRB

Source Section

RncEquipment

UlIrmcacDowngradedBronzeOther

Number of times the Uplink iRM CAC downgrades but allocates the RB resources for a low priority user (OLS equals to bronze); this could occur during the resources allocation or reconfiguration of: an initial call establishment, a multi-service call establishment or release, an incoming relocation, an Always-on upsizing or an iRM scheduling upgrade or downgrade. (Other)

Data Source

RNC C-Node

Source Field

VS.UlIrmcacDowngradedBronze.Other

Source Section

RncEquipment

UlIrmcacDowngradedBronzePsIb128

Number of times the Uplink iRM CAC downgrades but allocates the RB resources for a low priority user (OLS equals to bronze); this could occur during the resources allocation or reconfiguration of: an initial call establishment, a multi-service call establishment or release, an incoming relocation, an Always-on upsizing or an iRM scheduling upgrade or downgrade. (PsIb128)

Data Source

RNC C-Node

Source Field

VS.UlIrmcacDowngradedBronze.PsIb128

Source Section

RncEquipment

UlIrmcacDowngradedBronzePsIb16

Number of times the Uplink iRM CAC downgrades but allocates the RB resources for a low priority user (OLS equals to bronze); this could occur during the resources allocation or reconfiguration of: an initial call establishment, a multi-service call establishment or release, an incoming relocation, an Always-on upsizing or an iRM scheduling upgrade or downgrade. (PsIb16)

Data Source

RNC C-Node

Source Field

VS.UlIrmcacDowngradedBronze.PsIb16

Source Section

RncEquipment

UlIrmcacDowngradedBronzePsIb32

Number of times the Uplink iRM CAC downgrades but allocates the RB resources for a low priority user (OLS equals to bronze); this could occur during the resources allocation or reconfiguration of: an initial call establishment, a multi-service call establishment or release, an incoming relocation, an Always-on upsizing or an iRM scheduling upgrade or downgrade. (PsIb32)

Data Source

RNC C-Node

Source Field

VS.UlIrmcacDowngradedBronze.PsIb32

Source Section

RncEquipment

UlIrmcacDowngradedBronzePsIb384

Number of times the Uplink iRM CAC downgrades but allocates the RB resources for a low priority user (OLS equals to bronze); this could occur during the resources allocation or reconfiguration of: an initial call establishment, a multi-service call establishment or release, an incoming relocation, an Always-on upsizing or an iRM scheduling upgrade or downgrade. (PsIb384)

Data Source

RNC C-Node

Source Field

VS.UlIrmcacDowngradedBronze.PsIb384

Source Section

RncEquipment

UlIrmcacDowngradedBronzePsIb64

Number of times the Uplink iRM CAC downgrades but allocates the RB resources for a low priority user (OLS equals to bronze); this could occur during the resources allocation or reconfiguration of: an initial call establishment, a multi-service call establishment or release, an incoming relocation, an Always-on upsizing or an iRM scheduling upgrade or downgrade. (PsIb64)

Data Source

RNC C-Node

Source Field

VS.UlIrmcacDowngradedBronze.PsIb64

Source Section

RncEquipment

UlIrmcacDowngradedBronzePsIb8

Number of times the Uplink iRM CAC downgrades but allocates the RB resources for a low priority user (OLS equals to bronze); this could occur during the resources allocation or reconfiguration of: an initial call establishment, a multi-service call establishment or release, an incoming relocation, an Always-on upsizing or an iRM scheduling upgrade or downgrade. (PsIb8)

Data Source

RNC C-Node

Source Field

VS.UlIrmcacDowngradedBronze.PsIb8

Source Section

RncEquipment

UlIrmcacDowngradedBronzePsOther

Number of times the Uplink iRM CAC downgrades but allocates the RB resources for a low priority user (OLS equals to bronze); this could occur during the resources allocation or reconfiguration of: an initial call establishment, a multi-service call establishment or release, an incoming relocation, an Always-on upsizing or an iRM scheduling upgrade or downgrade. (PsOther)

Data Source

RNC C-Node

Source Field

VS.UlIrmcacDowngradedBronze.PsOther

Source Section

RncEquipment

UlIrmcacDowngradedBronzePsStr128

Number of times the Uplink iRM CAC downgrades but allocates the RB resources for a low priority user (OLS equals to bronze); this could occur during the resources allocation or reconfiguration of: an initial call establishment, a multi-service call establishment or release, an incoming relocation, an Always-on upsizing or an iRM scheduling upgrade or downgrade. (PsStr128)

Data Source

RNC C-Node

Source Field

VS.UlIrmcacDowngradedBronze.PsStr128

Source Section

RncEquipment

UlIrmcacDowngradedBronzePsStr16

Number of times the Uplink iRM CAC downgrades but allocates the RB resources for a low priority user (OLS equals to bronze); this could occur during the resources allocation or reconfiguration of: an initial call establishment, a multi-service call establishment or release, an incoming relocation, an Always-on upsizing or an iRM scheduling upgrade or downgrade. (PsStr16)

Data Source

RNC C-Node

Source Field

VS.UlIrmcacDowngradedBronze.PsStr16

Source Section

RncEquipment

UlIrmcacDowngradedBronzePsStr32

Number of times the Uplink iRM CAC downgrades but allocates the RB resources for a low priority user (OLS equals to bronze); this could occur during the resources allocation or reconfiguration of: an initial call establishment, a multi-service call establishment or release, an incoming relocation, an Always-on upsizing or an iRM scheduling upgrade or downgrade. (PsStr32)

Data Source

RNC C-Node

Source Field

VS.UlIrmcacDowngradedBronze.PsStr32

Source Section

RncEquipment

UlIrmcacDowngradedBronzePsStr64

Number of times the Uplink iRM CAC downgrades but allocates the RB resources for a low priority user (OLS equals to bronze); this could occur during the resources allocation or reconfiguration of: an initial call establishment, a multi-service call establishment or release, an incoming relocation, an Always-on upsizing or an iRM scheduling upgrade or downgrade. (PsStr64)

Data Source

RNC C-Node

Source Field

VS.UlIrmcacDowngradedBronze.PsStr64

Source Section

RncEquipment

UlIrmcacDowngradedGoldOther

Number of times the Uplink iRM CAC downgrades but allocates the RB resources for a high priority user (OLS equals to gold); this could occur during the resources allocation or reconfiguration of: an initial call establishment, a multi-service call establishment or release, an incoming relocation, an Always-on upsizing or an iRM scheduling upgrade or downgrade. (Other)

Data Source

RNC C-Node

Source Field

VS.UlIrmcacDowngradedGold.Other

Source Section

RncEquipment

UlIrmcacDowngradedGoldPsIb128

Number of times the Uplink iRM CAC downgrades but allocates the RB resources for a high priority user (OLS equals to gold); this could occur during the resources allocation or reconfiguration of: an initial call establishment, a multi-service call establishment or release, an incoming relocation, an Always-on upsizing or an iRM scheduling upgrade or downgrade. (PsIb128)

Data Source

RNC C-Node

Source Field

VS.UlIrmcacDowngradedGold.PsIb128

Source Section

RncEquipment

UlIrmcacDowngradedGoldPsIb16

Number of times the Uplink iRM CAC downgrades but allocates the RB resources for a high priority user (OLS equals to gold); this could occur during the resources allocation or reconfiguration of: an initial call establishment, a multi-service call establishment or release, an incoming relocation, an Always-on upsizing or an iRM scheduling upgrade or downgrade. (PsIb16)

Data Source

RNC C-Node

Source Field

VS.UlIrmcacDowngradedGold.PsIb16

Source Section

RncEquipment

UlIrmcacDowngradedGoldPsIb32

Number of times the Uplink iRM CAC downgrades but allocates the RB resources for a high priority user (OLS equals to gold); this could occur during the resources allocation or reconfiguration of: an initial call establishment, a multi-service call establishment or release, an incoming relocation, an Always-on upsizing or an iRM scheduling upgrade or downgrade. (PsIb32)

Data Source

RNC C-Node

Source Field

VS.UlIrmcacDowngradedGold.PsIb32

Source Section

RncEquipment

UlIrmcacDowngradedGoldPsIb384

Number of times the Uplink iRM CAC downgrades but allocates the RB resources for a high priority user (OLS equals to gold); this could occur during the resources allocation or reconfiguration of: an initial call establishment, a multi-service call establishment or release, an incoming relocation, an Always-on upsizing or an iRM scheduling upgrade or downgrade. (PsIb384)

Data Source

RNC C-Node

Source Field

VS.UlIrmcacDowngradedGold.PsIb384

Source Section

RncEquipment

UlIrmcacDowngradedGoldPsIb64

Number of times the Uplink iRM CAC downgrades but allocates the RB resources for a high priority user (OLS equals to gold); this could occur during the resources allocation or reconfiguration of: an initial call establishment, a multi-service call establishment or release, an incoming relocation, an Always-on upsizing or an iRM scheduling upgrade or downgrade. (PsIb64)

Data Source

RNC C-Node

Source Field

VS.UlIrmcacDowngradedGold.PsIb64

Source Section

RncEquipment

UlIrmcacDowngradedGoldPsIb8

Number of times the Uplink iRM CAC downgrades but allocates the RB resources for a high priority user (OLS equals to gold); this could occur during the resources allocation or reconfiguration of: an initial call establishment, a multi-service call establishment or release, an incoming relocation, an Always-on upsizing or an iRM scheduling upgrade or downgrade. (PsIb8)

Data Source

RNC C-Node

Source Field

VS.UlIrmcacDowngradedGold.PsIb8

Source Section

RncEquipment

UlIrmcacDowngradedGoldPsOther

Number of times the Uplink iRM CAC downgrades but allocates the RB resources for a high priority user (OLS equals to gold); this could occur during the resources allocation or reconfiguration of: an initial call establishment, a multi-service call establishment or release, an incoming relocation, an Always-on upsizing or an iRM scheduling upgrade or downgrade. (PsOther)

Data Source

RNC C-Node

Source Field

VS.UlIrmcacDowngradedGold.PsOther

Source Section

RncEquipment

UlIrmcacDowngradedGoldPsStr128

Number of times the Uplink iRM CAC downgrades but allocates the RB resources for a high priority user (OLS equals to gold); this could occur during the resources allocation or reconfiguration of: an initial call establishment, a multi-service call establishment or release, an incoming relocation, an Always-on upsizing or an iRM scheduling upgrade or downgrade. (PsStr128)

Data Source

RNC C-Node

Source Field

VS.UlIrmcacDowngradedGold.PsStr128

Source Section

RncEquipment

UlIrmcacDowngradedGoldPsStr16

Number of times the Uplink iRM CAC downgrades but allocates the RB resources for a high priority user (OLS equals to gold); this could occur during the resources allocation or reconfiguration of: an initial call establishment, a multi-service call establishment or release, an incoming relocation, an Always-on upsizing or an iRM scheduling upgrade or downgrade. (PsStr16)

Data Source

RNC C-Node

Source Field

VS.UlIrmcacDowngradedGold.PsStr16

Source Section

RncEquipment

UlIrmcacDowngradedGoldPsStr32

Number of times the Uplink iRM CAC downgrades but allocates the RB resources for a high priority user (OLS equals to gold); this could occur during the resources allocation or reconfiguration of: an initial call establishment, a multi-service call establishment or release, an incoming relocation, an Always-on upsizing or an iRM scheduling upgrade or downgrade. (PsStr32)

Data Source

RNC C-Node

Source Field

VS.UlIrmcacDowngradedGold.PsStr32

Source Section

RncEquipment

UlIrmcacDowngradedGoldPsStr64

Number of times the Uplink iRM CAC downgrades but allocates the RB resources for a high priority user (OLS equals to gold); this could occur during the resources allocation or reconfiguration of: an initial call establishment, a multi-service call establishment or release, an incoming relocation, an Always-on upsizing or an iRM scheduling upgrade or downgrade. (PsStr64)

Data Source

RNC C-Node

Source Field

VS.UlIrmcacDowngradedGold.PsStr64

Source Section

RncEquipment

UlIrmcacDowngradedSilverOther

Number of times the Uplink iRM CAC downgrades but allocates the RB resources for a medium priority user (OLS equals to silver); this could occur during the resources allocation or reconfiguration of: an initial call establishment, a multi-service call establishment or release, an incoming relocation, an Always-on upsizing or an iRM scheduling upgrade or downgrade. (Other)

Data Source

RNC C-Node

Source Field

VS.UlIrmcacDowngradedSilver.Other

Source Section

RncEquipment

UlIrmcacDowngradedSilverPsIb128

Number of times the Uplink iRM CAC downgrades but allocates the RB resources for a medium priority user (OLS equals to silver); this could occur during the resources allocation or reconfiguration of: an initial call establishment, a multi-service call establishment or release, an incoming relocation, an Always-on upsizing or an iRM scheduling upgrade or downgrade. (PsIb128)

Data Source

RNC C-Node

Source Field

VS.UlIrmcacDowngradedSilver.PsIb128

Source Section

RncEquipment

UlIrmcacDowngradedSilverPsIb16

Number of times the Uplink iRM CAC downgrades but allocates the RB resources for a medium priority user (OLS equals to silver); this could occur during the resources allocation or reconfiguration of: an initial call establishment, a multi-service call establishment or release, an incoming relocation, an Always-on upsizing or an iRM scheduling upgrade or downgrade. (PsIb16)

Data Source

RNC C-Node

Source Field

VS.UlIrmcacDowngradedSilver.PsIb16

Source Section

RncEquipment

UlIrmcacDowngradedSilverPsIb32

Number of times the Uplink iRM CAC downgrades but allocates the RB resources for a medium priority user (OLS equals to silver); this could occur during the resources allocation or reconfiguration of: an initial call establishment, a multi-service call establishment or release, an incoming relocation, an Always-on upsizing or an iRM scheduling upgrade or downgrade. (PsIb32)

Data Source

RNC C-Node

Source Field

VS.UlIrmcacDowngradedSilver.PsIb32

Source Section

RncEquipment

UlIrmcacDowngradedSilverPsIb384

Number of times the Uplink iRM CAC downgrades but allocates the RB resources for a medium priority user (OLS equals to silver); this could occur during the resources allocation or reconfiguration of: an initial call establishment, a multi-service call establishment or release, an incoming relocation, an Always-on upsizing or an iRM scheduling upgrade or downgrade. (PsIb384)

Data Source

RNC C-Node

Source Field

VS.UlIrmcacDowngradedSilver.PsIb384

Source Section

RncEquipment

UlIrmcacDowngradedSilverPsIb64

Number of times the Uplink iRM CAC downgrades but allocates the RB resources for a medium priority user (OLS equals to silver); this could occur during the resources allocation or reconfiguration of: an initial call establishment, a multi-service call establishment or release, an incoming relocation, an Always-on upsizing or an iRM scheduling upgrade or downgrade. (PsIb64)

Data Source

RNC C-Node

Source Field

VS.UlIrmcacDowngradedSilver.PsIb64

Source Section

RncEquipment

UlIrmcacDowngradedSilverPsIb8

Number of times the Uplink iRM CAC downgrades but allocates the RB resources for a medium priority user (OLS equals to silver); this could occur during the resources allocation or reconfiguration of: an initial call establishment, a multi-service call establishment or release, an incoming relocation, an Always-on upsizing or an iRM scheduling upgrade or downgrade. (PsIb8)

Data Source

RNC C-Node

Source Field

VS.UlIrmcacDowngradedSilver.PsIb8

Source Section

RncEquipment

UlIrmcacDowngradedSilverPsOther

Number of times the Uplink iRM CAC downgrades but allocates the RB resources for a medium priority user (OLS equals to silver); this could occur during the resources allocation or reconfiguration of: an initial call establishment, a multi-service call establishment or release, an incoming relocation, an Always-on upsizing or an iRM scheduling upgrade or downgrade. (PsOther)

Data Source

RNC C-Node

Source Field

VS.UlIrmcacDowngradedSilver.PsOther

Source Section

RncEquipment

UlIrmcacDowngradedSilverPsStr128

Number of times the Uplink iRM CAC downgrades but allocates the RB resources for a medium priority user (OLS equals to silver); this could occur during the resources allocation or reconfiguration of: an initial call establishment, a multi-service call establishment or release, an incoming relocation, an Always-on upsizing or an iRM scheduling upgrade or downgrade. (PsStr128)

Data Source

RNC C-Node

Source Field

VS.UlIrmcacDowngradedSilver.PsStr128

Source Section

RncEquipment

UlIrmcacDowngradedSilverPsStr16

Number of times the Uplink iRM CAC downgrades but allocates the RB resources for a medium priority user (OLS equals to silver); this could occur during the resources allocation or reconfiguration of: an initial call establishment, a multi-service call establishment or release, an incoming relocation, an Always-on upsizing or an iRM scheduling upgrade or downgrade. (PsStr16)

Data Source

RNC C-Node

Source Field

VS.UlIrmcacDowngradedSilver.PsStr16

Source Section

RncEquipment

UlIrmcacDowngradedSilverPsStr32

Number of times the Uplink iRM CAC downgrades but allocates the RB resources for a medium priority user (OLS equals to silver); this could occur during the resources allocation or reconfiguration of: an initial call establishment, a multi-service call establishment or release, an incoming relocation, an Always-on upsizing or an iRM scheduling upgrade or downgrade. (PsStr32)

Data Source

RNC C-Node

Source Field

VS.UlIrmcacDowngradedSilver.PsStr32

Source Section

RncEquipment

UlIrmcacDowngradedSilverPsStr64

Number of times the Uplink iRM CAC downgrades but allocates the RB resources for a medium priority user (OLS equals to silver); this could occur during the resources allocation or reconfiguration of: an initial call establishment, a multi-service call establishment or release, an incoming relocation, an Always-on upsizing or an iRM scheduling upgrade or downgrade. (PsStr64)

Data Source

RNC C-Node

Source Field

VS.UlIrmcacDowngradedSilver.PsStr64

Source Section

RncEquipment

UlIrmcacMaintainedBronzeOther

Number of times the Uplink iRM CAC allocates the requested RB resources for a low priority user (OLS equals to bronze); this could occur during the resources allocation or reconfiguration of: an initial call establishment, a multi-service call establishment or release, an incoming relocation, an Always-on upsizing or an iRM scheduling upgrade or downgrade. (Other)

Data Source

RNC C-Node

Source Field

VS.UlIrmcacMaintainedBronze.Other

Source Section

RncEquipment

UlIrmcacMaintainedBronzePsIb128

Number of times the Uplink iRM CAC allocates the requested RB resources for a low priority user (OLS equals to bronze); this could occur during the resources allocation or reconfiguration of: an initial call establishment, a multi-service call establishment or release, an incoming relocation, an Always-on upsizing or an iRM scheduling upgrade or downgrade. (PsIb128)

Data Source

RNC C-Node

Source Field

VS.UlIrmcacMaintainedBronze.PsIb128

Source Section

RncEquipment

UlIrmcacMaintainedBronzePsIb16

Number of times the Uplink iRM CAC allocates the requested RB resources for a low priority user (OLS equals to bronze); this could occur during the resources allocation or reconfiguration of: an initial call establishment, a multi-service call establishment or release, an incoming relocation, an Always-on upsizing or an iRM scheduling upgrade or downgrade. (PsIb16)

Data Source

RNC C-Node

Source Field

VS.UlIrmcacMaintainedBronze.PsIb16

Source Section

RncEquipment

UlIrmcacMaintainedBronzePsIb32

Number of times the Uplink iRM CAC allocates the requested RB resources for a low priority user (OLS equals to bronze); this could occur during the resources allocation or reconfiguration of: an initial call establishment, a multi-service call establishment or release, an incoming relocation, an Always-on upsizing or an iRM scheduling upgrade or downgrade. (PsIb32)

Data Source

RNC C-Node

Source Field

VS.UlIrmcacMaintainedBronze.PsIb32

Source Section

RncEquipment

UlIrmcacMaintainedBronzePsIb384

Number of times the Uplink iRM CAC allocates the requested RB resources for a low priority user (OLS equals to bronze); this could occur during the resources allocation or reconfiguration of: an initial call establishment, a multi-service call establishment or release, an incoming relocation, an Always-on upsizing or an iRM scheduling upgrade or downgrade. (PsIb384)

Data Source

RNC C-Node

Source Field

VS.UlIrmcacMaintainedBronze.PsIb384

Source Section

RncEquipment

UlIrmcacMaintainedBronzePsIb64

Number of times the Uplink iRM CAC allocates the requested RB resources for a low priority user (OLS equals to bronze); this could occur during the resources allocation or reconfiguration of: an initial call establishment, a multi-service call establishment or release, an incoming relocation, an Always-on upsizing or an iRM scheduling upgrade or downgrade. (PsIb64)

Data Source

RNC C-Node

Source Field

VS.UlIrmcacMaintainedBronze.PsIb64

Source Section

RncEquipment

UlIrmcacMaintainedBronzePsIb8

Number of times the Uplink iRM CAC allocates the requested RB resources for a low priority user (OLS equals to bronze); this could occur during the resources allocation or reconfiguration

of: an initial call establishment, a multi-service call establishment or release, an incoming relocation, an Always-on upsizing or an iRM scheduling upgrade or downgrade. (PsIb8)

Data Source

RNC C-Node

Source Field

VS.UlIrmcacMaintainedBronze.PsIb8

Source Section

RncEquipment

UlIrmcacMaintainedBronzePsOther

Number of times the Uplink iRM CAC allocates the requested RB resources for a low priority user (OLS equals to bronze); this could occur during the resources allocation or reconfiguration of: an initial call establishment, a multi-service call establishment or release, an incoming relocation, an Always-on upsizing or an iRM scheduling upgrade or downgrade. (PsOther)

Data Source

RNC C-Node

Source Field

VS.UlIrmcacMaintainedBronze.PsOther

Source Section

RncEquipment

UlIrmcacMaintainedBronzePsStr128

Number of times the Uplink iRM CAC allocates the requested RB resources for a low priority user (OLS equals to bronze); this could occur during the resources allocation or reconfiguration of: an initial call establishment, a multi-service call establishment or release, an incoming relocation, an Always-on upsizing or an iRM scheduling upgrade or downgrade. (PsStr128)

Data Source

RNC C-Node

Source Field

VS.UlIrmcacMaintainedBronze.PsStr128

Source Section

RncEquipment

UlIrmcacMaintainedBronzePsStr16

Number of times the Uplink iRM CAC allocates the requested RB resources for a low priority user (OLS equals to bronze); this could occur during the resources allocation or reconfiguration of: an initial call establishment, a multi-service call establishment or release, an incoming relocation, an Always-on upsizing or an iRM scheduling upgrade or downgrade. (PsStr16)

Data Source

RNC C-Node

Source Field

VS.UlIrmcacMaintainedBronze.PsStr16

Source Section

RncEquipment

UlIrmcacMaintainedBronzePsStr32

Number of times the Uplink iRM CAC allocates the requested RB resources for a low priority user (OLS equals to bronze); this could occur during the resources allocation or reconfiguration of: an initial call establishment, a multi-service call establishment or release, an incoming relocation, an Always-on upsizing or an iRM scheduling upgrade or downgrade. (PsStr32)

Data Source

RNC C-Node

Source Field

VS.UlIrmcacMaintainedBronze.PsStr32

Source Section

RncEquipment

UlIrmcacMaintainedBronzePsStr64

Number of times the Uplink iRM CAC allocates the requested RB resources for a low priority user (OLS equals to bronze); this could occur during the resources allocation or reconfiguration of: an initial call establishment, a multi-service call establishment or release, an incoming relocation, an Always-on upsizing or an iRM scheduling upgrade or downgrade. (PsStr64)

Data Source

RNC C-Node

Source Field

VS.UlIrmcacMaintainedBronze.PsStr64

Source Section

RncEquipment

UlIrmcacMaintainedGoldOther

Number of times the Uplink iRM CAC allocates the requested RB resources for a high priority user (OLS equals to gold); this could occur during the resources allocation or reconfiguration of: an initial call establishment, a multi-service call establishment or release, an incoming relocation, an Always-on upsizing or an iRM scheduling upgrade or downgrade. (Other)

Data Source

RNC C-Node

Source Field

VS.UlIrmcacMaintainedGold.Other

Source Section

RncEquipment

UlIrmcacMaintainedGoldPsIb128

Number of times the Uplink iRM CAC allocates the requested RB resources for a high priority user (OLS equals to gold); this could occur during the resources allocation or reconfiguration of: an initial call establishment, a multi-service call establishment or release, an incoming relocation, an Always-on upsizing or an iRM scheduling upgrade or downgrade. (PsIb128)

Data Source

RNC C-Node

Source Field

VS.UlIrmcacMaintainedGold.PsIb128

Source Section

RncEquipment

UlIrmcacMaintainedGoldPsIb16

Number of times the Uplink iRM CAC allocates the requested RB resources for a high priority user (OLS equals to gold); this could occur during the resources allocation or reconfiguration of: an initial call establishment, a multi-service call establishment or release, an incoming relocation, an Always-on upsizing or an iRM scheduling upgrade or downgrade. (PsIb16)

Data Source

RNC C-Node

Source Field

VS.UlIrmcacMaintainedGold.PsIb16

Source Section

RncEquipment

UlIrmcacMaintainedGoldPsIb32

Number of times the Uplink iRM CAC allocates the requested RB resources for a high priority user (OLS equals to gold); this could occur during the resources allocation or reconfiguration of: an initial call establishment, a multi-service call establishment or release, an incoming relocation, an Always-on upsizing or an iRM scheduling upgrade or downgrade. (PsIb32)

Data Source

RNC C-Node

Source Field

VS.UlIrmcacMaintainedGold.PsIb32

Source Section

RncEquipment

UlIrmcacMaintainedGoldPsIb384

Number of times the Uplink iRM CAC allocates the requested RB resources for a high priority user (OLS equals to gold); this could occur during the resources allocation or reconfiguration of: an initial call establishment, a multi-service call establishment or release, an incoming relocation, an Always-on upsizing or an iRM scheduling upgrade or downgrade. (PsIb384)

Data Source

RNC C-Node

Source Field

VS.UlIrmcacMaintainedGold.PsIb384

Source Section

RncEquipment

UlIrmcacMaintainedGoldPsIb64

Number of times the Uplink iRM CAC allocates the requested RB resources for a high priority user (OLS equals to gold); this could occur during the resources allocation or reconfiguration of: an initial call establishment, a multi-service call establishment or release, an incoming relocation, an Always-on upsizing or an iRM scheduling upgrade or downgrade. (PsIb64)

Data Source

RNC C-Node

Source Field

VS.UlIrmcacMaintainedGold.PsIb64

Source Section

RncEquipment

UlIrmcacMaintainedGoldPsIb8

Number of times the Uplink iRM CAC allocates the requested RB resources for a high priority user (OLS equals to gold); this could occur during the resources allocation or reconfiguration of: an initial call establishment, a multi-service call establishment or release, an incoming relocation, an Always-on upsizing or an iRM scheduling upgrade or downgrade. (PsIb8)

Data Source

RNC C-Node

Source Field

VS.UlIrmcacMaintainedGold.PsIb8

Source Section

RncEquipment

UlIrmcacMaintainedGoldPsOther

Number of times the Uplink iRM CAC allocates the requested RB resources for a high priority user (OLS equals to gold); this could occur during the resources allocation or reconfiguration

of: an initial call establishment, a multi-service call establishment or release, an incoming relocation, an Always-on upsizing or an iRM scheduling upgrade or downgrade. (PsOther)

Data Source

RNC C-Node

Source Field

VS.UlIrmcacMaintainedGold.PsOther

Source Section

RncEquipment

UlIrmcacMaintainedGoldPsStr128

Number of times the Uplink iRM CAC allocates the requested RB resources for a high priority user (OLS equals to gold); this could occur during the resources allocation or reconfiguration of: an initial call establishment, a multi-service call establishment or release, an incoming relocation, an Always-on upsizing or an iRM scheduling upgrade or downgrade. (PsStr128)

Data Source

RNC C-Node

Source Field

VS.UlIrmcacMaintainedGold.PsStr128

Source Section

RncEquipment

UlIrmcacMaintainedGoldPsStr16

Number of times the Uplink iRM CAC allocates the requested RB resources for a high priority user (OLS equals to gold); this could occur during the resources allocation or reconfiguration of: an initial call establishment, a multi-service call establishment or release, an incoming relocation, an Always-on upsizing or an iRM scheduling upgrade or downgrade. (PsStr16)

Data Source

RNC C-Node

Source Field

VS.UlIrmcacMaintainedGold.PsStr16

Source Section

RncEquipment

UlIrmcacMaintainedGoldPsStr32

Number of times the Uplink iRM CAC allocates the requested RB resources for a high priority user (OLS equals to gold); this could occur during the resources allocation or reconfiguration of: an initial call establishment, a multi-service call establishment or release, an incoming relocation, an Always-on upsizing or an iRM scheduling upgrade or downgrade. (PsStr32)

Data Source

RNC C-Node

Source Field

VS.UlIrmcacMaintainedGold.PsStr32

Source Section

RncEquipment

UlIrmcacMaintainedGoldPsStr64

Number of times the Uplink iRM CAC allocates the requested RB resources for a high priority user (OLS equals to gold); this could occur during the resources allocation or reconfiguration of: an initial call establishment, a multi-service call establishment or release, an incoming relocation, an Always-on upsizing or an iRM scheduling upgrade or downgrade. (PsStr64)

Data Source

RNC C-Node

Source Field

VS.UlIrmcacMaintainedGold.PsStr64

Source Section

RncEquipment

UlIrmcacMaintainedSilverOther

Number of times the Uplink iRM CAC allocates the requested RB resources for a medium priority user (OLS equals to silver); this could occur during the resources allocation or reconfiguration of: an initial call establishment, a multi-service call establishment or release, an incoming relocation, an Always-on upsizing or an iRM scheduling upgrade or downgrade. (Other)

Data Source

RNC C-Node

Source Field

VS.UlIrmcacMaintainedSilver.Other

Source Section

RncEquipment

UlIrmcacMaintainedSilverPsIb128

Number of times the Uplink iRM CAC allocates the requested RB resources for a medium priority user (OLS equals to silver); this could occur during the resources allocation or reconfiguration of: an initial call establishment, a multi-service call establishment or release, an incoming relocation, an Always-on upsizing or an iRM scheduling upgrade or downgrade. (PsIb128)

Data Source

RNC C-Node

Source Field

VS.UlIrmcacMaintainedSilver.PsIb128

Source Section

RncEquipment

UlIrmcacMaintainedSilverPsIb16

Number of times the Uplink iRM CAC allocates the requested RB resources for a medium priority user (OLS equals to silver); this could occur during the resources allocation or reconfiguration of: an initial call establishment, a multi-service call establishment or release, an incoming relocation, an Always-on upsizing or an iRM scheduling upgrade or downgrade. (PsIb16)

Data Source

RNC C-Node

Source Field

VS.UlIrmcacMaintainedSilver.PsIb16

Source Section

RncEquipment

UlIrmcacMaintainedSilverPsIb32

Number of times the Uplink iRM CAC allocates the requested RB resources for a medium priority user (OLS equals to silver); this could occur during the resources allocation or reconfiguration of: an initial call establishment, a multi-service call establishment or release, an incoming relocation, an Always-on upsizing or an iRM scheduling upgrade or downgrade. (PsIb32)

Data Source

RNC C-Node

Source Field

VS.UlIrmcacMaintainedSilver.PsIb32

Source Section

RncEquipment

UlIrmcacMaintainedSilverPsIb384

Number of times the Uplink iRM CAC allocates the requested RB resources for a medium priority user (OLS equals to silver); this could occur during the resources allocation or reconfiguration of: an initial call establishment, a multi-service call establishment or release, an incoming relocation, an Always-on upsizing or an iRM scheduling upgrade or downgrade. (PsIb384)

Data Source

RNC C-Node

Source Field

VS.UlIrmcacMaintainedSilver.PsIb384

Source Section

RncEquipment

UlIrmcacMaintainedSilverPsIb64

Number of times the Uplink iRM CAC allocates the requested RB resources for a medium priority user (OLS equals to silver); this could occur during the resources allocation or reconfiguration of: an initial call establishment, a multi-service call establishment or release, an incoming relocation, an Always-on upsizing or an iRM scheduling upgrade or downgrade. (PsIb64)

Data Source

RNC C-Node

Source Field

VS.UlIrmcacMaintainedSilver.PsIb64

Source Section

RncEquipment

UlIrmcacMaintainedSilverPsIb8

Number of times the Uplink iRM CAC allocates the requested RB resources for a medium priority user (OLS equals to silver); this could occur during the resources allocation or reconfiguration of: an initial call establishment, a multi-service call establishment or release, an incoming relocation, an Always-on upsizing or an iRM scheduling upgrade or downgrade. (PsIb8)

Data Source

RNC C-Node

Source Field

VS.UlIrmcacMaintainedSilver.PsIb8

Source Section

RncEquipment

UlIrmcacMaintainedSilverPsOther

Number of times the Uplink iRM CAC allocates the requested RB resources for a medium priority user (OLS equals to silver); this could occur during the resources allocation or reconfiguration of: an initial call establishment, a multi-service call establishment or release, an incoming relocation, an Always-on upsizing or an iRM scheduling upgrade or downgrade. (PsOther)

Data Source

RNC C-Node

Source Field

VS.UlIrmcacMaintainedSilver.PsOther

Source Section

RncEquipment

UlIrmcacMaintainedSilverPsStr128

Number of times the Uplink iRM CAC allocates the requested RB resources for a medium priority user (OLS equals to silver); this could occur during the resources allocation or reconfiguration of: an initial call establishment, a multi-service call establishment or release, an incoming relocation, an Always-on upsizing or an iRM scheduling upgrade or downgrade. (PsStr128)

Data Source

RNC C-Node

Source Field

VS.UlIrmcacMaintainedSilver.PsStr128

Source Section

RncEquipment

UlIrmcacMaintainedSilverPsStr16

Number of times the Uplink iRM CAC allocates the requested RB resources for a medium priority user (OLS equals to silver); this could occur during the resources allocation or reconfiguration of: an initial call establishment, a multi-service call establishment or release, an incoming relocation, an Always-on upsizing or an iRM scheduling upgrade or downgrade. (PsStr16)

Data Source

RNC C-Node

Source Field

VS.UlIrmcacMaintainedSilver.PsStr16

Source Section

RncEquipment

UlIrmcacMaintainedSilverPsStr32

Number of times the Uplink iRM CAC allocates the requested RB resources for a medium priority user (OLS equals to silver); this could occur during the resources allocation or reconfiguration of: an initial call establishment, a multi-service call establishment or release, an incoming relocation, an Always-on upsizing or an iRM scheduling upgrade or downgrade. (PsStr32)

Data Source

RNC C-Node

Source Field

VS.UlIrmcacMaintainedSilver.PsStr32

Source Section

RncEquipment

UlIrmcacMaintainedSilverPsStr64

Number of times the Uplink iRM CAC allocates the requested RB resources for a medium priority user (OLS equals to silver); this could occur during the resources allocation or reconfiguration of: an initial call establishment, a multi-service call establishment or release, an incoming relocation, an Always-on upsizing or an iRM scheduling upgrade or downgrade. (PsStr64)

Data Source

RNC C-Node

Source Field

VS.UlIrmcacMaintainedSilver.PsStr64

Source Section

RncEquipment

UlIrmcacRejectedBronzeOther

Number of times the Uplink iRM CAC rejects the RB resources allocation for a low priority user (OLS equals to bronze); this could occur during the resources allocation or reconfiguration of: an initial call establishment, a multi-service call establishment or release, an incoming relocation, an Always-on upsizing or an iRM scheduling upgrade or downgrade. (Other)

Data Source

RNC C-Node

Source Field

VS.UlIrmcacRejectedBronze.Other

Source Section

RncEquipment

UlIrmcacRejectedBronzePsIb128

Number of times the Uplink iRM CAC rejects the RB resources allocation for a low priority user (OLS equals to bronze); this could occur during the resources allocation or reconfiguration of: an initial call establishment, a multi-service call establishment or release, an incoming relocation, an Always-on upsizing or an iRM scheduling upgrade or downgrade. (PsIb128)

Data Source

RNC C-Node

Source Field

VS.UlIrmcacRejectedBronze.PsIb128

Source Section

RncEquipment

UlIrmcacRejectedBronzePsIb16

Number of times the Uplink iRM CAC rejects the RB resources allocation for a low priority user (OLS equals to bronze); this could occur during the resources allocation or reconfiguration of: an initial call establishment, a multi-service call establishment or release, an incoming relocation, an Always-on upsizing or an iRM scheduling upgrade or downgrade. (PsIb16)

Data Source

RNC C-Node

Source Field

VS.UlIrmcacRejectedBronze.PsIb16

Source Section

RncEquipment

UlIrmcacRejectedBronzePsIb32

Number of times the Uplink iRM CAC rejects the RB resources allocation for a low priority user (OLS equals to bronze); this could occur during the resources allocation or reconfiguration of: an initial call establishment, a multi-service call establishment or release, an incoming relocation, an Always-on upsizing or an iRM scheduling upgrade or downgrade. (PsIb32)

Data Source

RNC C-Node

Source Field

VS.UlIrmcacRejectedBronze.PsIb32

Source Section

RncEquipment

UlIrmcacRejectedBronzePsIb384

Number of times the Uplink iRM CAC rejects the RB resources allocation for a low priority user (OLS equals to bronze); this could occur during the resources allocation or reconfiguration of: an initial call establishment, a multi-service call establishment or release, an incoming relocation, an Always-on upsizing or an iRM scheduling upgrade or downgrade. (PsIb384)

Data Source

RNC C-Node

Source Field

VS.UlIrmcacRejectedBronze.PsIb384

Source Section

RncEquipment

UlIrmcacRejectedBronzePsIb64

Number of times the Uplink iRM CAC rejects the RB resources allocation for a low priority user (OLS equals to bronze); this could occur during the resources allocation or reconfiguration of: an initial call establishment, a multi-service call establishment or release, an incoming relocation, an Always-on upsizing or an iRM scheduling upgrade or downgrade. (PsIb64)

Data Source

RNC C-Node

Source Field

VS.UlIrmcacRejectedBronze.PsIb64

Source Section

RncEquipment

UlIrmcacRejectedBronzePsIb8

Number of times the Uplink iRM CAC rejects the RB resources allocation for a low priority user (OLS equals to bronze); this could occur during the resources allocation or reconfiguration

of: an initial call establishment, a multi-service call establishment or release, an incoming relocation, an Always-on upsizing or an iRM scheduling upgrade or downgrade. (PsIb8)

Data Source

RNC C-Node

Source Field

VS.UlIrmcacRejectedBronze.PsIb8

Source Section

RncEquipment

UlIrmcacRejectedBronzePsOther

Number of times the Uplink iRM CAC rejects the RB resources allocation for a low priority user (OLS equals to bronze); this could occur during the resources allocation or reconfiguration of: an initial call establishment, a multi-service call establishment or release, an incoming relocation, an Always-on upsizing or an iRM scheduling upgrade or downgrade. (PsOther)

Data Source

RNC C-Node

Source Field

VS.UlIrmcacRejectedBronze.PsOther

Source Section

RncEquipment

UlIrmcacRejectedBronzePsStr128

Number of times the Uplink iRM CAC rejects the RB resources allocation for a low priority user (OLS equals to bronze); this could occur during the resources allocation or reconfiguration of: an initial call establishment, a multi-service call establishment or release, an incoming relocation, an Always-on upsizing or an iRM scheduling upgrade or downgrade. (PsStr128)

Data Source

RNC C-Node

Source Field

VS.UlIrmcacRejectedBronze.PsStr128

Source Section

RncEquipment

UlIrmcacRejectedBronzePsStr16

Number of times the Uplink iRM CAC rejects the RB resources allocation for a low priority user (OLS equals to bronze); this could occur during the resources allocation or reconfiguration of: an initial call establishment, a multi-service call establishment or release, an incoming relocation, an Always-on upsizing or an iRM scheduling upgrade or downgrade. (PsStr16)

Data Source

RNC C-Node

Source Field

VS.UlIrmcacRejectedBronze.PsStr16

Source Section

RncEquipment

UlIrmcacRejectedBronzePsStr32

Number of times the Uplink iRM CAC rejects the RB resources allocation for a low priority user (OLS equals to bronze); this could occur during the resources allocation or reconfiguration of: an initial call establishment, a multi-service call establishment or release, an incoming relocation, an Always-on upsizing or an iRM scheduling upgrade or downgrade. (PsStr32)

Data Source

RNC C-Node

Source Field

VS.UlIrmcacRejectedBronze.PsStr32

Source Section

RncEquipment

UlIrmcacRejectedBronzePsStr64

Number of times the Uplink iRM CAC rejects the RB resources allocation for a low priority user (OLS equals to bronze); this could occur during the resources allocation or reconfiguration of: an initial call establishment, a multi-service call establishment or release, an incoming relocation, an Always-on upsizing or an iRM scheduling upgrade or downgrade. (PsStr64)

Data Source

RNC C-Node

Source Field

VS.UlIrmcacRejectedBronze.PsStr64

Source Section

RncEquipment

UlIrmcacRejectedGoldOther

Number of times the Uplink iRM CAC rejects the RB resources allocation for a high priority user (OLS equals to gold); this could occur during the resources allocation or reconfiguration of: an initial call establishment, a multi-service call establishment or release, an incoming relocation, an Always-on upsizing or an iRM scheduling upgrade or downgrade. (Other)

Data Source

RNC C-Node

Source Field

VS.UlIrmcacRejectedGold.Other

Source Section

RncEquipment

UlIrmcacRejectedGoldPsIb128

Number of times the Uplink iRM CAC rejects the RB resources allocation for a high priority user (OLS equals to gold); this could occur during the resources allocation or reconfiguration of: an initial call establishment, a multi-service call establishment or release, an incoming relocation, an Always-on upsizing or an iRM scheduling upgrade or downgrade. (PsIb128)

Data Source

RNC C-Node

Source Field

VS.UlIrmcacRejectedGold.PsIb128

Source Section

RncEquipment

UlIrmcacRejectedGoldPsIb16

Number of times the Uplink iRM CAC rejects the RB resources allocation for a high priority user (OLS equals to gold); this could occur during the resources allocation or reconfiguration of: an initial call establishment, a multi-service call establishment or release, an incoming relocation, an Always-on upsizing or an iRM scheduling upgrade or downgrade. (PsIb16)

Data Source

RNC C-Node

Source Field

VS.UlIrmcacRejectedGold.PsIb16

Source Section

RncEquipment

UlIrmcacRejectedGoldPsIb32

Number of times the Uplink iRM CAC rejects the RB resources allocation for a high priority user (OLS equals to gold); this could occur during the resources allocation or reconfiguration of: an initial call establishment, a multi-service call establishment or release, an incoming relocation, an Always-on upsizing or an iRM scheduling upgrade or downgrade. (PsIb32)

Data Source

RNC C-Node

Source Field

VS.UlIrmcacRejectedGold.PsIb32

Source Section

RncEquipment

UlIrmcacRejectedGoldPsIb384

Number of times the Uplink iRM CAC rejects the RB resources allocation for a high priority user (OLS equals to gold); this could occur during the resources allocation or reconfiguration of: an initial call establishment, a multi-service call establishment or release, an incoming relocation, an Always-on upsizing or an iRM scheduling upgrade or downgrade. (PsIb384)

Data Source

RNC C-Node

Source Field

VS.UlIrmcacRejectedGold.PsIb384

Source Section

RncEquipment

UlIrmcacRejectedGoldPsIb64

Number of times the Uplink iRM CAC rejects the RB resources allocation for a high priority user (OLS equals to gold); this could occur during the resources allocation or reconfiguration of: an initial call establishment, a multi-service call establishment or release, an incoming relocation, an Always-on upsizing or an iRM scheduling upgrade or downgrade. (PsIb64)

Data Source

RNC C-Node

Source Field

VS.UlIrmcacRejectedGold.PsIb64

Source Section

RncEquipment

UlIrmcacRejectedGoldPsIb8

Number of times the Uplink iRM CAC rejects the RB resources allocation for a high priority user (OLS equals to gold); this could occur during the resources allocation or reconfiguration of: an initial call establishment, a multi-service call establishment or release, an incoming relocation, an Always-on upsizing or an iRM scheduling upgrade or downgrade. (PsIb8)

Data Source

RNC C-Node

Source Field

VS.UlIrmcacRejectedGold.PsIb8

Source Section

RncEquipment

UlIrmcacRejectedGoldPsOther

Number of times the Uplink iRM CAC rejects the RB resources allocation for a high priority user (OLS equals to gold); this could occur during the resources allocation or reconfiguration

of: an initial call establishment, a multi-service call establishment or release, an incoming relocation, an Always-on upsizing or an iRM scheduling upgrade or downgrade. (PsOther)

Data Source

RNC C-Node

Source Field

VS.UlIrmcacRejectedGold.PsOther

Source Section

RncEquipment

UlIrmcacRejectedGoldPsStr128

Number of times the Uplink iRM CAC rejects the RB resources allocation for a high priority user (OLS equals to gold); this could occur during the resources allocation or reconfiguration of: an initial call establishment, a multi-service call establishment or release, an incoming relocation, an Always-on upsizing or an iRM scheduling upgrade or downgrade. (PsStr128)

Data Source

RNC C-Node

Source Field

VS.UlIrmcacRejectedGold.PsStr128

Source Section

RncEquipment

UlIrmcacRejectedGoldPsStr16

Number of times the Uplink iRM CAC rejects the RB resources allocation for a high priority user (OLS equals to gold); this could occur during the resources allocation or reconfiguration of: an initial call establishment, a multi-service call establishment or release, an incoming relocation, an Always-on upsizing or an iRM scheduling upgrade or downgrade. (PsStr16)

Data Source

RNC C-Node

Source Field

VS.UlIrmcacRejectedGold.PsStr16

Source Section

RncEquipment

UlIrmcacRejectedGoldPsStr32

Number of times the Uplink iRM CAC rejects the RB resources allocation for a high priority user (OLS equals to gold); this could occur during the resources allocation or reconfiguration of: an initial call establishment, a multi-service call establishment or release, an incoming relocation, an Always-on upsizing or an iRM scheduling upgrade or downgrade. (PsStr32)

Data Source

RNC C-Node

Source Field

VS.UlIrmcacRejectedGold.PsStr32

Source Section

RncEquipment

UlIrmcacRejectedGoldPsStr64

Number of times the Uplink iRM CAC rejects the RB resources allocation for a high priority user (OLS equals to gold); this could occur during the resources allocation or reconfiguration of: an initial call establishment, a multi-service call establishment or release, an incoming relocation, an Always-on upsizing or an iRM scheduling upgrade or downgrade. (PsStr64)

Data Source

RNC C-Node

Source Field

VS.UlIrmcacRejectedGold.PsStr64

Source Section

RncEquipment

UlIrmcacRejectedSilverOther

Number of times the Uplink iRM CAC rejects the RB resources allocation for a medium priority user (OLS equals to silver); this could occur during the resources allocation or reconfiguration of: an initial call establishment, a multi-service call establishment or release, an incoming relocation, an Always-on upsizing or an iRM scheduling upgrade or downgrade. (Other)

Data Source

RNC C-Node

Source Field

VS.UlIrmcacRejectedSilver.Other

Source Section

RncEquipment

UlIrmcacRejectedSilverPsIb128

Number of times the Uplink iRM CAC rejects the RB resources allocation for a medium priority user (OLS equals to silver); this could occur during the resources allocation or reconfiguration of: an initial call establishment, a multi-service call establishment or release, an incoming relocation, an Always-on upsizing or an iRM scheduling upgrade or downgrade. (PsIb128)

Data Source

RNC C-Node

Source Field

VS.UlIrmcacRejectedSilver.PsIb128

Source Section

RncEquipment

UlIrmcacRejectedSilverPsIb16

Number of times the Uplink iRM CAC rejects the RB resources allocation for a medium priority user (OLS equals to silver); this could occur during the resources allocation or reconfiguration of: an initial call establishment, a multi-service call establishment or release, an incoming relocation, an Always-on upsizing or an iRM scheduling upgrade or downgrade. (PsIb16)

Data Source

RNC C-Node

Source Field

VS.UlIrmcacRejectedSilver.PsIb16

Source Section

RncEquipment

UlIrmcacRejectedSilverPsIb32

Number of times the Uplink iRM CAC rejects the RB resources allocation for a medium priority user (OLS equals to silver); this could occur during the resources allocation or reconfiguration of: an initial call establishment, a multi-service call establishment or release, an incoming relocation, an Always-on upsizing or an iRM scheduling upgrade or downgrade. (PsIb32)

Data Source

RNC C-Node

Source Field

VS.UlIrmcacRejectedSilver.PsIb32

Source Section

RncEquipment

UlIrmcacRejectedSilverPsIb384

Number of times the Uplink iRM CAC rejects the RB resources allocation for a medium priority user (OLS equals to silver); this could occur during the resources allocation or reconfiguration of: an initial call establishment, a multi-service call establishment or release, an incoming relocation, an Always-on upsizing or an iRM scheduling upgrade or downgrade. (PsIb384)

Data Source

RNC C-Node

Source Field

VS.UlIrmcacRejectedSilver.PsIb384

Source Section

RncEquipment

UlIrmcacRejectedSilverPsIb64

Number of times the Uplink iRM CAC rejects the RB resources allocation for a medium priority user (OLS equals to silver); this could occur during the resources allocation or reconfiguration of: an initial call establishment, a multi-service call establishment or release, an incoming relocation, an Always-on upsizing or an iRM scheduling upgrade or downgrade. (PsIb64)

Data Source

RNC C-Node

Source Field

VS.UlIrmcacRejectedSilver.PsIb64

Source Section

RncEquipment

UlIrmcacRejectedSilverPsIb8

Number of times the Uplink iRM CAC rejects the RB resources allocation for a medium priority user (OLS equals to silver); this could occur during the resources allocation or reconfiguration of: an initial call establishment, a multi-service call establishment or release, an incoming relocation, an Always-on upsizing or an iRM scheduling upgrade or downgrade. (PsIb8)

Data Source

RNC C-Node

Source Field

VS.UlIrmcacRejectedSilver.PsIb8

Source Section

RncEquipment

UlIrmcacRejectedSilverPsOther

Number of times the Uplink iRM CAC rejects the RB resources allocation for a medium priority user (OLS equals to silver); this could occur during the resources allocation or reconfiguration of: an initial call establishment, a multi-service call establishment or release, an incoming relocation, an Always-on upsizing or an iRM scheduling upgrade or downgrade. (PsOther)

Data Source

RNC C-Node

Source Field

VS.UlIrmcacRejectedSilver.PsOther

Source Section

RncEquipment

UlIrmcacRejectedSilverPsStr128

Number of times the Uplink iRM CAC rejects the RB resources allocation for a medium priority user (OLS equals to silver); this could occur during the resources allocation or reconfiguration of: an initial call establishment, a multi-service call establishment or release, an incoming relocation, an Always-on upsizing or an iRM scheduling upgrade or downgrade. (PsStr128)

Data Source

RNC C-Node

Source Field

VS.UlIrmcacRejectedSilver.PsStr128

Source Section

RncEquipment

UlIrmcacRejectedSilverPsStr16

Number of times the Uplink iRM CAC rejects the RB resources allocation for a medium priority user (OLS equals to silver); this could occur during the resources allocation or reconfiguration of: an initial call establishment, a multi-service call establishment or release, an incoming relocation, an Always-on upsizing or an iRM scheduling upgrade or downgrade. (PsStr16)

Data Source

RNC C-Node

Source Field

VS.UlIrmcacRejectedSilver.PsStr16

Source Section

RncEquipment

UlIrmcacRejectedSilverPsStr32

Number of times the Uplink iRM CAC rejects the RB resources allocation for a medium priority user (OLS equals to silver); this could occur during the resources allocation or reconfiguration of: an initial call establishment, a multi-service call establishment or release, an incoming relocation, an Always-on upsizing or an iRM scheduling upgrade or downgrade. (PsStr32)

Data Source

RNC C-Node

Source Field

VS.UlIrmcacRejectedSilver.PsStr32

Source Section

RncEquipment

UlIrmcacRejectedSilverPsStr64

Number of times the Uplink iRM CAC rejects the RB resources allocation for a medium priority user (OLS equals to silver); this could occur during the resources allocation or reconfiguration of: an initial call establishment, a multi-service call establishment or release, an incoming relocation, an Always-on upsizing or an iRM scheduling upgrade or downgrade. (PsStr64)

Data Source

RNC C-Node

Source Field

VS.UlIrmcacRejectedSilver.PsStr64

Source Section

RncEquipment

ULTransBlock_CSD

Total Number of Uplink Transport Blocks for CSD. (Sum aggregation.)

Data Source

RNC

Source Field

VS.ULTransBlock.CSD

Source Section

Common Control Channel

ULTransBlock_CSD_Avg

Total Number of Uplink Transport Blocks for CSD. This peg provides Average aggregation for the NumTransBlockTotUL.CSD measurement.

Data Source

RNC

Source Field

VS.ULTransBlock.CSD

Source Section

Common Control Channel

ULTransBlock_CSD_Max

Total Number of Uplink Transport Blocks for CSD. This peg provides Maximum aggregation for the NumTransBlockTotUL.CSD measurement.

Data Source

RNC

Source Field

VS.ULTransBlock.CSD

Source Section

Common Control Channel

ULTransBlock_CSD_SumMax

Total Number of Uplink Transport Blocks for CSD. This peg provides Sum across time and Maximum across elements aggregation for the NumTransBlockTotUL.CSD measurement.

Data Source

RNC

Source Field

VS.ULTransBlock.CSD

Source Section

Common Control Channel

ULTransBlock_CSV_12_2

Uplink Transport Blocks including CRC for 12.2kbps CSV

Data Source

RNC

Source Field

VS.ULTransBlock.CSV.12-2

Source Section

Common Control Channel

ULTransBlock_CSV_4_75

Uplink Transport Blocks including CRC for 4.75kbps CSV

Data Source

RNC

Source Field

VS.ULTransBlock.CSV.4-75

Source Section

Common Control Channel

ULTransBlock_CSV_5_9

Uplink Transport Blocks including CRC for 5.9kbps CSV

Data Source

RNC

Source Field

VS.ULTransBlock.CSV.5-9

Source Section

Common Control Channel

ULTransBlock_CSV_7_95

Uplink Transport Blocks including CRC for 7.95kbps CSV

Data Source

RNC

Source Field

VS.ULTransBlock.CSV.7-95

Source Section

Common Control Channel

ULTransBlock_PS

Total Number of Uplink Transport Blocks for PS. (Sum aggregation.)

Data Source

RNC

Source Field

VS.ULTransBlock.PS

Source Section

Common Control Channel

ULTransBlock_PS_Avg

Total Number of Uplink Transport Blocks for PS. This peg provides Average aggregation for the NumTransBlockTotUL.PS measurement.

Data Source

RNC

Source Field

VS.ULTransBlock.PS

Source Section

Common Control Channel

ULTransBlock_PS_Max

Total Number of Uplink Transport Blocks for PS. This peg provides Maximum aggregation for the NumTransBlockTotUL.PS measurement.

Data Source

RNC

Source Field

VS.ULTransBlock.PS

Source Section

Common Control Channel

ULTransBlock_PS_SumMax

Total Number of Uplink Transport Blocks for PS. This peg provides Sum across time and Maximum across elements aggregation for the NumTransBlockTotUL.PS measurement.

Data Source

RNC

Source Field

VS.ULTransBlock.PS

Source Section

Common Control Channel

ULTransBlockErr_CSD

Number of Errored Uplink Transport Blocks for CSD

Data Source

RNC

Source Field

VS.ULTransBlockErr.CSD

Source Section

Common Control Channel

ULTransBlockErr_CSV_12_2

Errored Uplink Transport Blocks for 12.2 CSV

Data Source

RNC

Source Field

VS.ULTransBlockErr.CSV.12-2

Source Section

Common Control Channel

ULTransBlockErr_CSV_4_75

Errored Uplink Transport Blocks for 4.75 CSV

Data Source

RNC

Source Field

VS.ULTransBlockErr.CSV.4-75

Source Section

Common Control Channel

ULTransBlockErr_CSV_5_9

Errored Uplink Transport Blocks for 5.9 CSV

Data Source

RNC

Source Field

VS.ULTransBlockErr.CSV.5-9

Source Section

Common Control Channel

ULTransBlockErr_CSV_7_95

Errored Uplink Transport Blocks for 7.95 CSV

Data Source

RNC

Source Field

VS.ULTransBlockErr.CSV.7-95

Source Section

Common Control Channel

ULTransBlockErr_PS

Number of Errored Uplink Transport Blocks for PS

Data Source

RNC

Source Field

VS.ULTransBlockErr.PS

Source Section

Common Control Channel

UnhandledPagingRequestsCsInternalResourcesNotAvailable

Number of CS paging request not sent to the I-Node to be broadcasted (InternalResourcesNotAvailable)

Data Source

RNC C-Node

Source Field

VS.UnhandledPagingRequestsCs.InternalResourcesNotAvailable

Source Section

RncEquipment

UnhandledPagingRequestsCsInvalidFormat

Number of CS paging request not sent to the I-Node to be broadcasted (InvalidFormat)

Data Source

RNC C-Node

Source Field

VS.UnhandledPagingRequestsCs.InvalidFormat

Source Section

RncEquipment

UnhandledPagingRequestsCsInvalidInformation

Number of CS paging request not sent to the I-Node to be broadcasted (InvalidInformation)

Data Source

RNC C-Node

Source Field

VS.UnhandledPagingRequestsCs.InvalidInformation

Source Section

RncEquipment

UnhandledPagingRequestsCsOtherCause

Number of CS paging request not sent to the I-Node to be broadcasted (OtherCause)

Data Source

RNC C-Node

Source Field

VS.UnhandledPagingRequestsCs.OtherCause

Source Section

RncEquipment

UnhandledPagingRequestsCsOverloadControls

Number of CS paging request not sent to the I-Node to be broadcasted (OverloadControls)

Data Source

RNC C-Node

Source Field

VS.UnhandledPagingRequestsCs.OverloadControls

Source Section

RncEquipment

UnhandledPagingRequestsCsResetInProgress

Number of CS paging request not sent to the I-Node to be broadcasted (ResetInProgress)

Data Source

RNC C-Node

Source Field

VS.UnhandledPagingRequestsCs.ResetInProgress

Source Section

RncEquipment

UnhandledPagingRequestsPsInternalResourcesNotAvailable

Number of PS paging request not sent to the I-Node to be broadcasted (InternalResourcesNotAvailable)

Data Source

RNC C-Node

Source Field

VS.UnhandledPagingRequestsPs.InternalResourcesNotAvailable

Source Section

RncEquipment

UnhandledPagingRequestsPsInvalidFormat

Number of PS paging request not sent to the I-Node to be broadcasted (InvalidFormat)

Data Source

RNC C-Node

Source Field

VS.UnhandledPagingRequestsPs.InvalidFormat

Source Section

RncEquipment

UnhandledPagingRequestsPsInvalidInformation

Number of PS paging request not sent to the I-Node to be broadcasted (InvalidInformation)

Data Source

RNC C-Node

Source Field

VS.UnhandledPagingRequestsPs.InvalidInformation

Source Section

RncEquipment

UnhandledPagingRequestsPsOtherCause

Number of PS paging request not sent to the I-Node to be broadcasted (OtherCause)

Data Source

RNC C-Node

Source Field

VS.UnhandledPagingRequestsPs.OtherCause

Source Section

RncEquipment

UnhandledPagingRequestsPsOverloadControls

Number of PS paging request not sent to the I-Node to be broadcasted (OverloadControls)

Data Source

RNC C-Node

Source Field

VS.UnhandledPagingRequestsPs.OverloadControls

Source Section

RncEquipment

UnhandledPagingRequestsPsResetInProgress

Number of PS paging request not sent to the I-Node to be broadcasted (ResetInProgress)

Data Source

RNC C-Node

Source Field

VS.UnhandledPagingRequestsPs.ResetInProgress

Source Section

RncEquipment

userLabel

A user-friendly (and user assigned) name of the associated object.

Data Source

OMC-U Bulk CM

Source Field

un:userLabel

Source Section

RncFunction

System Primitive Calculations

The following is a list of primitive calculations for the System entity.

GRAPHmultiLineSeparator

Special Control Field for Multi-Line Graphs

Calculation

```
""
```

NUMDAYS

of days in Report

Calculation

```
DAYSINREPORT()
```

Updated: 2009-06-23

NUMHOURS

of hours in Summation Data

Calculation

TMU Primitive Calculations

The following is a list of primitive calculations for the TMU entity.

GRAPHmultiLineSeparator

Special Control Field for Multi-Line Graphs

Calculation

```
""
```

NUMDAYS

of days in Report

Calculation

```
DAYSINREPORT()
```

NUMHOURS

of hours in Summation Data

Calculation

TMU Peg Counts

The following is a list of peg counts for the TMU entity.

RncCallCleanupIuCall

RncCallCleanup (IuCall)

Data Source

RNC C-Node

Source Field

VS.RncCallCleanup.IuCall

Source Section

TMU

RncCallCleanupUeCall

RncCallCleanup (UeCall)

Data Source

RNC C-Node

Source Field

VS.RncCallCleanup.UeCall

Source Section

TMU

RncCallCleanupUeRrc

RncCallCleanup (UeRrc)

Data Source

RNC C-Node

Source Field

VS.RncCallCleanup.UeRrc

Source Section

TMU

UnlistedNcell Primitive Calculations

The following is a list of primitive calculations for the UnlistedNcell entity.

GRAPHmultiLineSeparator

Special Control Field for Multi-Line Graphs

Calculation

""

NUMDAYS

of days in Report

Calculation

```
DAYSINREPORT()
```

NUMHOURS

of hours in Summation Data

Calculation

UnlistedNcell Peg Counts

The following is a list of peg counts for the UnlistedNcell entity.

Data_interval

Data interval for this collection of data in seconds. It is taken from the relevant <gp> tag in the RNC MATRIX XML data file. (0 indicates that daily data has been loaded within the last 24 hours.)

Data Source

RNC MATRIX

Source Field

<gp> tag

NumUnlistHORejPerNcell_RejHO

Number of rejected HO for an unlisted neighbour cell

Data Source

RNC MATRIX

Source Field

NumUnlistHORejPerNcell.RejHO

Source Section

Handover Matrix Counter for Soft/Softer Handover

UtranCell Primitive Calculations

The following is a list of primitive calculations for the UtranCell entity.

Air_Interface_Blocking

This KPI provides the blocking rate on the Uu interface. It is derived from RRC and RAB Connection Attempts, which failed due to reasons related to blocking on the air interface. For the RRC procedure this is derived from RRC connection establishment failure due to 'Call Admission Control' procedure denying access. For RAB establishment this is mapped on failures due to code starvation and 'Dynamic Bearer Control' denying access.

Calculation

```
(1.0 - ((1.0 - (RRC_FailConnEstab_CAC * 1.0 / RRC_AttConnEstab_sum)) * (1.0
- (vsum (RABFailEstab_Load, RABFailEstab_CodeStarv, 0) * 1.0 /
Total_RAB_Attempts))))
```

ave_rtwp

New name:RF_RTWP_Mean.Average Received Total Wideband Power in dBm

Calculation

```
RF_RTWP_Mean
```

ave_tssi

New name:RF_TxPwr_AllCodes_Mean.Average Transmitted Carrier Power as a percentage from 5 seconds samples

Calculation

```
RF_TxPwr_AllCodes_Mean
```

Average_Active_Set_Size

This KPI provides the 'overhead' due to SHO radio links, that is the number of radio links established per active UE (UEs with one or several RABs established).

Calculation

```
NumRLActAvg * 1.0 / (Mean_Number_of_Active_RABs_All_Services -
(Mean_Number_of_Active_RABs_All_Services * (vsum
(NumIntraRNCSHOAtt_CSVandPS, NumIntraRNCSHOAtt_CSDandPS, 0) * 1.0 /
Total_Number_of_Intra_RNC_SHO_Attempts)))
```

Average_CS_Data_Call_Hold_Time

This KPI provides the average CS Data Call Hold Time in seconds. It is derived from the average number of active CS data RABs multiplied with the appropriate time period and divided by the number of successful established CS data RABs.

Calculation

```
(NumActRABMean_CSD * Data_interval_for_RNC_data) * 1.0 / vsum
(RAB_AttEstabCS_ConvData, -1.0 * RAB_FailEstabCSNoQueuing_ConvData)
```

Average_CS_Speech_Call_Hold_Time

This KPI provides the average CS Speech Call Hold Time in seconds. It is derived from the average number of active CS speech RABs multiplied with the appropriate time period and divided by the number of successful established CS speech RABs.

Calculation

```
(NumActRABMean_CSV12 * Data_interval_for_RNC_data) * 1.0 / vsum
(RAB_AttEstabCS_ConvVoice, -1.0 * RAB_FailEstabCSNoQueuing_ConvVoice)
```

Average_PS_Data_Call_Hold_Time

This KPI provides the average PS Data Call Hold Time in seconds. It is derived from the average number of active PS RABs in Cell_DCH multiplied with the appropriate time period and divided by the number of successful established PS RABs.

Calculation

```
(Mean_Number_of_PS_DL_RABs_in_Cell_DCH * PS_RAB_Cell_DCH_to_Active_Factor *
Data_interval_for_RNC_data) * 1.0 / vsum (PS_RAB_Attempts, -1.0 *
PS_RAB_Establishment_Failures)
```

Avg_Number_Active_Radio_Links

Mean value of active Radio Link-Id samples measured over the Granularity interval

Calculation

```
NumRLActAvg
```

Cell_Factor_for_RNC_based_Data

This factor is used to break down RNC based PS traffic PMs (number of user bits) on a per cell basis. The PMs for 'Number of User Bits' are typically provided on a per RNC basis. To derive the cell basis, the cell based 'Mean Number of PS DL RABs in Cell_DCH' is used to determine the data on a per cell basis.

Calculation

```
Mean_Number_of_PS_DL_RABs_in_Cell_DCH * 1.0 / sum (NodeB.RNC.NodeB.Utran-
Cell, Mean_Number_of_PS_DL_RABs_in_Cell_DCH)
```

Cell_Update_Request_Rate_due_to_Cell_Reselection

This KPI reflects the rate of CELL UPDATE request messages with cause 'Cell Reselection' due to Cell reselection in Cell FACH in relation to the total number of cell updates.

Calculation

```
NumCellUpdateRequest_CellReselect * 100.0 /
Total_Number_of_Cell_Update_Requests
```

Cell_Update_Request_Rate_due_to_Paging_Response

This KPI reflects the rate of CELL UPDATE request messages with cause 'Paging Response' in relation to the total number of cell updates. Total number of paging response received from the UE, in response to group of RNCs initiated type 1 paging procedure.

Calculation

```
NumCellUpdateRequest_PagingResponse * 100.0 /
Total_Number_of_Cell_Update_Requests
```

Cell_Update_Request_Rate_due_to_Periodic_Cell_Update_in_Cell_FACH

This KPI reflects the rate of CELL UPDATE request messages with cause 'periodic cell update' due to expiry of T305 while the UE is in Cell_FACH for heart beat monitoring of the UE by UTRAN.

Calculation

```
NumCellUpdateRequest_PeriodUpdate * 100.0 /
Total_Number_of_Cell_Update_Requests
```

Cell_Update_Request_Rate_due_to_Radio_Link_Failure

This KPI reflects the rate of CELL UPDATE request messages with cause 'Radio Link Failure' due to the UE losing physical layer synchronisation for longer than T313 seconds in relation to the total number of cell updates.

Calculation

```
NumCellUpdateRequest_RLF * 100.0 / Total_Number_of_Cell_Update_Requests
```

Cell_Update_Request_Rate_due_to_Reentering_the_Service_Area

This KPI reflects the rate of CELL UPDATE request messages with cause 'Re-enter Service Area' due to a UE in Cell FACH losing communication with group of RNCs and regaining communication before expiry of T317 in relation to the total number of cell updates.

Calculation

```
NumCellUpdateRequest_ReenterSA * 100.0 /
Total_Number_of_Cell_Update_Requests
```

Cell_Update_Request_Rate_due_to_RLC_Error

This KPI reflects the rate of CELL UPDATE request messages with cause 'RLC unrecoverable error' due to a failure in RLC in relation to the total number of cell updates.

Calculation

```
NumCellUpdateRequest_RLCError * 100.0 /
Total_Number_of_Cell_Update_Requests
```

Cell_Update_Request_Rate_due_to_Uplink_Data_Transmission

This KPI reflects the rate of CELL UPDATE request messages with cause 'Uplink Data Transmission' attempting to transmit data in URA PCH state in relation to the total number of cell updates.

Calculation

```
NumCellUpdateRequest_ULData * 100.0 / Total_Number_of_Cell_Update_Requests
```

Channel_Occupancy_Rate_for_PCH

The Channel Occupancy Rate for PCH represents the ratio of total bits transferred on the PCH to maximum bits available for PCH usage (service rate) per Granularity period.

Calculation

```
ChannelOccupRatePCH
```

Channel_Occupancy_Rate_for_RACH

The Channel Occupancy Rate for RACH represents the ratio of total bits transferred on the RACH to maximum bits available for RACH usage (service rate) per Granularity period.

Calculation

```
ChannelOccupRateRACH
```

Channelization_code_usage

The Channelization code usage is defined as the average of the "equivalent" channelization codes used over the total number of available (root) codes.

Calculation

```
ChanCodeUtil
```

Compressed_Mode_Preparations_Success_Rate

This KPI provides the percentage of successful performed RL reconfiguration preparations due to Compressed Mode (CM) from the attempts.

Calculation

```
vsum (NumAttCMPrep, -1.0 * NumFailCMPrep, 0) * 100.0 / NumAttCMPrep
```

CS_Data_Call_Success_Rate

This KPI provides the rate for successful access to UTRAN resources for CS Data services. It is based on the Successful RRC Connection Establishment Rate for all services, the Standalone SRB Drop Rate and the CSD RAB Establishment Success Rate. The three KPIs are multiplied to get the overall CS Data Call Success Rate.

Calculation

```
(Successful_RRC_Connection_Establishment_Rate_including_repeated_attempts)
* (1.0 - (Standalone_SRB_Drop_Rate / 100.0)) *
(CSD_RAB_Establishment_Success_Rate / 100.0)
```

CS_Data_RAB_Drop_Rate

This KPI provides the percentage of successful established RABs that dropped due to any reason for service type CS Data.

Calculation

```
(RAB_RelCS_Data_CauseRLF * Total_RAB_Drop_Factor) * 100.0 / vsum
(RAB_AttEstabCS_ConvData, -1.0 * RAB_FailEstabCSNoQueuing_ConvData)
```

CS_Data_Service_Denied_ratio

This KPI provides the rate of attempted CS data calls, which were denied. It is based on the KPI CS Data Call Success Rate.

Calculation

```
(1.0 - CS_Data_Call_Success_Rate)
```

CS_RAB_Drop_Rate_due_to_RLF

This KPI provides the percentage of successful established CS RAB connections dropped due to radio link failure (RLF), where UTRAN failed to regain UL synchronisation on air interface after RLF timer expiry.

Calculation

```
vsum (RAB_RelCS_Voice_CauseRLF, RAB_RelCS_Data_CauseRLF, 0) * 100.0 / (vsum
(RAB_AttEstabCS_ConvVoice, RAB_AttEstabCS_ConvData) - vsum
(RAB_FailEstabCSNoQueuing_ConvVoice, RAB_FailEstabCSNoQueuing_ConvData))
```

CS_RAB_Establishment_Success_Rate

This KPI provides the percentage of RAB attempts for any CS call (voice and data), which succeed.

Calculation

```
vsum (RAB_AttEstabCS_ConvVoice, RAB_AttEstabCS_ConvData, -1.0 *
RAB_FailEstabCSNoQueuing_ConvVoice, -1.0 *
RAB_FailEstabCSNoQueuing_ConvData, 0) * 100.0 / vsum
(RAB_AttEstabCS_ConvVoice, RAB_AttEstabCS_ConvData)
```

CS_Speech_Call_Success_Rate

This KPI provides the rate for successful access to UTRAN resources for CS Voice services. It is based on the Successful RRC Connection Establishment Rate for all services, the Standalone

SRB Drop Rate and the CSV RAB Establishment Success Rate. The three KPIs are multiplied to get the overall CS Speech Call Success Rate.

Calculation

```
(Successful_RRC_Connection_Establishment_Rate_including_repeated_attempts)
* (1.0 - (Standalone_SRB_Drop_Rate / 100.0)) *
(CSV_RAB_Establishment_Success_Rate / 100.0)
```

CS_Speech_RAB_Drop_Rate

This KPI provides the percentage of successful established RABs that dropped due to any reason for service type CS Voice.

Calculation

```
(RAB_RelCS_Voice_CauseRLF * Total_RAB_Drop_Factor) * 100.0 / vsum
(RAB_AttEstabCS_ConvVoice, -1.0 * RAB_FailEstabCSNoQueuing_ConvVoice)
```

CS_UMTS_to_GSM_HHO_Failure_Rate_Configuration_Unacceptable

This KPI provides the percentage of failed inter RAT hard handover attempts towards GSM network for CS calls due to unacceptable configuration.

Calculation

```
IRATHO_FailOutCS_ConfUnaccept * 100.0 / IRATHO_AttOutCS
```

CS_UMTS_to_GSM_HHO_Failure_Rate_Physical_Channel_Failure

This KPI provides the percentage of failed inter RAT hard handover attempts towards GSM network for CS calls due to physical channel failure.

Calculation

```
IRATHO_FailOutCS_PhyChnFail * 100.0 / IRATHO_AttOutCS
```

CS_UMTS_to_GSM_HHO_Failure_Rate_Protocol_Error

This KPI provides the percentage of failed inter RAT hard handover attempts towards GSM network for CS calls due to protocol error.

Calculation

```
IRATHO_FailOutCS_ProtErr * 100.0 / IRATHO_AttOutCS
```

CS_UMTS_to_GSM_HHO_Inter_RAT_Success_Rate

This KPI indicates the hard handover inter RAT performance towards GSM network for CS calls.

Calculation

```
vsum (IRATHO_AttOutCS, -1.0 * IRATHO_FailOutCS_sum, 0) * 100.0 /
IRATHO_AttOutCS
```

CS_Voice_Service_Denied_ratio

This KPI provides the rate of attempted CS voice calls, which were denied. It is based on the KPI CS Speech Call Success Rate.

Calculation

```
(1.0 - CS_Speech_Call_Success_Rate)
```

CSD_Accessibility_Rate

CSD Accessibility Rate (RRC / RAB) provides the rate for successful access to UTRAN resources for CS Data services. It is based on the Successful RRC Connection Establishment Rate for all services and the RAB Establishment Success Rate for CSD. Both KPIs are multiplied.

Calculation

```
(Successful_RRC_Connection_Establishment_Rate_including_repeated_attempts
* CSD_RAB_Establishment_Success_Rate) / 100.0
```

CSD_RAB_Establishment_Success_Rate

This KPI provides the percentage of RAB attempts for CS Data calls, which succeed.

Calculation

```
vsum (RAB_AttEstabCS_ConvData, -1.0 * RAB_FailEstabCSNoQueuing_ConvData, 0)
* 100.0 / RAB_AttEstabCS_ConvData
```

CSV_Accessibility_Rate

CSV Accessibility Rate (RRC / RAB) provides the rate for successful access to UTRAN resources for CS Voice services. It is based on the Successful RRC Connection Establishment Rate for all services and the RAB Establishment Success Rate for CSV. Both KPIs are multiplied.

Calculation

```
(Successful_RRC_Connection_Establishment_Rate_including_repeated_attempts
* CSV_RAB_Establishment_Success_Rate) / 100.0
```

CSV_RAB_Establishment_Success_Rate

This KPI provides the percentage of RAB attempts for CS Voice calls, which succeed.

Calculation

```
vsum (RAB_AttEstabCS_ConvVoice, -1.0 * RAB_FailEstabCSNoQueuing_ConvVoice,
0) * 100.0 / RAB_AttEstabCS_ConvVoice
```

Failed_RRC_Connection_Establishment_Rate_Congestion

This KPI provides the percentage of failed RRC connection requests due to congestion. Congestion is detected by Call Admission Control procedure (CAC).

Calculation

```
RRC_FailConnEstab_CAC * 100.0 / RRC_AttConnEstab_sum
```

Failed_RRC_Connection_Establishment_Rate_RL_Setup_Failure

This KPI provides the percentage of failed RRC connection requests due to radio link (RL) setup failure.

Calculation

```
RRC_FailConnEstab_RLSetupFailure * 100.0 / RRC_AttConnEstab_sum
```

Failed_RRC_Connection_Establishment_Rate_Timeout

This KPI is the percentage of RRC connection request that have failed due to not receiving 'RRC Connection Setup Complete' on timer expiry.

Calculation

```
RRC_FailConnEstab_SetupIncomplete * 100.0 / RRC_AttConnEstab_sum
```

Forward_Power_Overload_Duration

The Forward Power Overload Duration represents the total time that a cell is overloaded due to Downlink Power Control budget.

Calculation

```
FwdPowerOvldDuration
```

fwd_chan_ovld

New name:RF_ForwrdTrafficChn_Overload.The percentage of time during which the carrier was in power control overload on the forward traffic channel due to power control budget.

Calculation

```
RF_ForwrdTrafficChn_Overload
```

GRAPHmultiLineSeparator

Special Control Field for Multi-Line Graphs

Calculation

```
""
```

Updated: 2009-06-23

GSM_to_UMTS_handover_failure_rate_due_to_HoNotEnabled

This KPI defines the failure rate for failed incoming GSM to UMTS handover due to GSM to UMTS handover not enable in target system.

Calculation

```
IRATHO_FailIncCS_HoNotEnabled * 100.0 / IRATHO_AttIncCS
```

GSM_to_UMTS_handover_failure_rate_due_to_RelocCancel

This KPI defines the failure rate for failed incoming GSM to UMTS handover due to a Relocation Cancellation.

Calculation

```
IRATHO_FailIncCS_RelocCancel * 100.0 / IRATHO_AttIncCS
```

GSM_to_UMTS_handover_failure_rate_due_to_timer_expiry

This KPI defines the failure rate for failed incoming GSM to UMTS handover due to timer expiry of T_hoToUtranComplete.

Calculation

```
IRATHO_FailIncCS_T_hoToUtranComplete * 100.0 / IRATHO_AttIncCS
```

Hard_Handover_Inter_RAT_Success_Rate_UMTS_to_GSM

This KPI indicates the overall hard handover inter RAT performance towards GSM network for CS calls starting from the relocation attempt.

Calculation

```
vsum (IRATHO_AttOutCS, -1.0 * IRATHO_FailOutCS_sum, 0) * 100.0 /
IRATHO_AttRelocPrepOutCS
```

HS_DSCH_Cell_Change_Failure_Rate_due_to_Transport_Channel_Reconfiguration_Failure

This KPI provides the HS-DSCH Cell Changes Failure Rate for a failed HS-DSCH Cell Change due to a Transport Channel reconfiguration failure.

Calculation

```
NumFailServCellChangeHSDSCH_transport_channel_reconf_failure * 100.0 /
NumAttServCellChangeHSDSCH
```

HS_DSCH_Cell_Change_Failure_Rate_due_to_Transport_Channel_Reconfiguration_Timeout

This KPI provides the HS-DSCH Cell Changes Failure Rate for a failed HS-DSCH Cell Change due to a Transport Channel reconfiguration timeout.

Calculation

```
NumFailServCellChangeHSDSCH_transport_channel_reconf_timeout * 100.0 /
NumAttServCellChangeHSDSCH
```

HS_DSCH_Cell_Change_Success_Rate

This KPI provides the percentage of successful performed serving HS-DSCH Cell Changes for HSDPA per serving HS-DSCH cell of the active set.

Calculation

```
vsum (NumAttServCellChangeHSDSCH, -1.0 * NumFailServCellChangeHSDSCH_sum,
0) * 100.0 / NumAttServCellChangeHSDSCH
```

HsDschDataFramePayloadData_Received

New name:MAC_DataFramePayload_HsDsch.Amount of Iub interface HS-DSCH DATA FRAME payload data in bits

Calculation

```
MAC_DataFramePayload_HsDsch
```

Incoming_CS_Inter_RAT_Handover_Success_Rate_GSM_to_UMTS

This KPI defines the success rate for incoming GSM to UMTS handover for CS calls.

Calculation

```
vsum (IRATHO_AttIncCS, -1.0 * IRATHO_FailIncCS_sum, 0) * 100.0 /
IRATHO_AttIncCS
```

InterFrequency_Hard_Handover_Failure_Rate_Quality_ConfigUnsupported

This KPI provides the failure rate for inter-frequency hard handovers due to quality failed due to unsupported configuration.

Calculation

```
HHO_FailInterFreq_Qual_ConfigUnsupported * 100.0 / HHO_AttInterFreq_Qual
```

InterFrequency_Hard_Handover_Failure_Rate_Quality_PhysChanFail

This KPI provides the failure rate for inter-frequency hard handovers due to quality failed due to a physical channel failure.

Calculation

```
HHO_FailInterFreq_Qual_PhysChanFail * 100.0 / HHO_AttInterFreq_Qual
```

InterFrequency_Hard_Handover_Failure_Rate_Quality_ProcTimeout

This KPI provides the failure rate for inter-frequency hard handovers due to quality failed due to a procedure timeout.

Calculation

```
HHO_FailInterFreq_Qual_ProcTimeout * 100.0 / HHO_AttInterFreq_Qual
```

InterFrequency_Hard_Handover_Failure_Rate_Quality_ProtErr

This KPI provides the failure rate for inter-frequency hard handovers due to quality failed due to a protocol error.

Calculation

```
HHO_FailInterFreq_Qual_ProtErr * 100.0 / HHO_AttInterFreq_Qual
```

InterFrequency_Hard_Handover_Success_Rate_Quality

This KPI provides the success rate for inter-frequency hard handovers due to quality of the used frequency.

Calculation

```
vsum (HHO_AttInterFreq_Qual, -1.0 * HHO_FailInterFreq_Qual_sum, 0) * 100.0
/ HHO_AttInterFreq_Qual
```

InterSystem_Directed_Retry_Failure_Rate_TarSys

This KPI provides the failure rate for CS inter-system directed retry due to a relocation failure in the target system per cell.

Calculation

```
NumFailRelocPrepUMTS_GSM_DirRetry_FailTarSys * 100.0 /
NumAttRelocPrepUMTS_GSM_DirRetry
```

InterSystem_Directed_Retry_Success_Rate

This KPI provides the success rate of relocation preparations for CS inter-system directed retry per cell.

Calculation

```
vsum (NumAttRelocPrepUMTS_GSM_DirRetry, -1.0 *
NumFailRelocPrepUMTS_GSM_DirRetry_sum, 0) * 100.0 /
NumAttRelocPrepUMTS_GSM_DirRetry
```

Intra_RNC_SHO_Fail_Rate_No_Reply

The Intra RNC SHO Failure Rate due to No Reply is the percentage of the failed performed intra RNC SHO with cause: No Reply.

Calculation

```
NumIntraRNCSHOFail_NoReply * 100.0 / vsum (NumIntraRNCSHOAtt_CSV,
NumIntraRNCSHOAtt_CSVandPS, NumIntraRNCSHOAtt_PS_LowData,
NumIntraRNCSHOAtt_PS_HighData, NumIntraRNCSHOAtt_Signalling)
```

Intra_RNC_SHO_Fail_Rate_UE_Rej

The Intra RNC SHO Failure Rate due to UE Reject is the percentage of the failed performed intra RNC SHO due to "Active Set Update Failure" message received from the UE.

Calculation

```
NumIntraRNCSHOFail_UERej * 100.0 / vsum (NumIntraRNCSHOAtt_CSV,
NumIntraRNCSHOAtt_CSVandPS, NumIntraRNCSHOAtt_PS_LowData,
NumIntraRNCSHOAtt_PS_HighData, NumIntraRNCSHOAtt_Signalling)
```

Intra_RNC_SHO_Success_Rate_CS_Data

The Intra RNC SHO Success Rate for CS Data is the percentage of the successful performed intra RNC SHO within the serving RNC with service type CSD.

Calculation

```
vsum (NumIntraRNCSHOAtt_CSD, -1.0 * NumIntraRNCSHOFail_CSD, 0) * 100.0 /
NumIntraRNCSHOAtt_CSD
```

Intra_RNC_SHO_Success_Rate_CSD_and_PS

The Intra RNC SHO Success Rate for CS Data with any PS data rate is the percentage of the successful performed intra RNC SHO with service type CSD and PS.

Calculation

```
vsum (NumIntraRNCSHOAtt_CSDandPS, -1.0 * NumIntraRNCSHOFail_CSDandPS, 0) *
100.0 / NumIntraRNCSHOAtt_CSDandPS
```

Intra_RNC_SHO_Success_Rate_CSV

The Performed Intra RNC SHO Success Rate for CSV is the percentage of the successful performed intra RNC SHO with service type CSV.

Calculation

```
vsum (NumIntraRNCSHOAtt_CSV, -1.0 * NumIntraRNCSHOFail_CSV, 0) * 100.0 /
NumIntraRNCSHOAtt_CSV
```

Intra_RNC_SHO_Success_Rate_CSV_and_PS

The Intra RNC SHO Success Rate for CS Voice with any PS data rate is the percentage of the successful performed intra RNC SHO with service type CSV and PS.

Calculation

```
vsum (NumIntraRNCSHOAtt_CSVandPS, -1.0 * NumIntraRNCSHOFail_CSVandPS, 0) *
100.0 / NumIntraRNCSHOAtt_CSVandPS
```

Intra_RNC_SHO_Success_Rate_Low_Datarate

The Intra RNC SHO Success Rate for Low Datarate is the percentage of the successful performed intra RNC SHO with service type PS with Datarate <= 64k.

Calculation

```
vsum (NumIntraRNCSHOAtt_PS_LowData, -1.0 * NumIntraRNCSHOFail_PS_LowData,
0) * 100.0 / NumIntraRNCSHOAtt_PS_LowData
```

Likely_Dropped_Call_Rate_in_Target_System_due_to_CS_UMTS_to_GSM_HHO

This KPI indicates the potential dropped CS calls in the target system due to UMTS to GSM HHO. It is the rate of dropped CS calls in relation to the attempts.

Calculation

```
IRATHO_TRelocOverall * 100.0 / IRATHO_AttOutCS
```

MacHsPayloadData_Sent

New name:MAC_PayloadData_HS_ToRadio.Amount of Uu interface MAC-hs payload data

Calculation

```
MAC_PayloadData_HS_ToRadio
```

MacHsPayloadDataACKed_Sent

New name:MAC_PayloadData_HS_ACKed.Amount of Uu interface MAC-hs payload data ACKed

Calculation

```
MAC_PayloadData_HS_ACKed
```

MacHsPayloadDataRetrans_Sent

New name:MAC_PayloadData_HS_Retrans.Amount of Uu interface MAC-hs payload data retransmitted

Calculation

```
MAC_PayloadData_HS_Retrans
```

Max_Number_Active_Radio_Links

Maximum value of the active Radio Link-Id samples, sampled over the Granularity period.

Calculation

```
NumRLActMax
```

max_rtwp

New name:RF_RTWP_Max.Maximum Received Total Wideband Power in dBm

Calculation

```
RF_RTWP_Max
```

max_tssi

New name:RF_TxPwr_AllCodes_Max.Maximum Transmitted Carrier Power as a percentage from 5 seconds samples

Calculation

```
RF_TxPwr_AllCodes_Max
```

MaxHsDschProvidedBitRate_Sent

New name:MAC_ProvidedBitRate_HsDsch_Max.The maximum value of MAC-d PDU bits/s, successfully transmitted over the radio interface, for any of the priority classes associated with the UE context specific HS-DSCH Priority Queues

Calculation

```
MAC_ProvidedBitRate_HsDsch_Max
```

MaxNumMACdPdu_Queued

New name:MAC_NumPduQueued_MacD_HsDsch_Max.Maximum HS-DSCH Priority Queue Length

Calculation

```
MAC_NumPduQueued_MacD_HsDsch_Max
```

MaxTransCarrPwrCodesNotHsdpa_Sent

New name:RF_TxPwr_CodesNotHSDPA_Max.Maximum Transmitted Carrier Power of all Codes not used for HSDPA

Calculation

```
RF_TxPwr_CodesNotHSDPA_Max
```

Mean_Number_of_Active_CS_RABs

This KPI provides the average number of CS RABs being in Cell_DCH state. CS Voice and Data RABs are summed up. CS RABs being in Cell_DCH are considered as active.

Calculation

```
vsum (NumActRABMean_CSV12, NumActRABMean_CSD, 0)
```

Mean_Number_of_Active_HSDSCH_RABs

This KPI provides the average number of active HSDSCH RABs.

Calculation

```
vsum (NumActRABMean_Bgrd_HSDSCH, NumActRABMean_Intact_HSDSCH, 0)
```

Mean_Number_of_Active_PS_DL_RABs

This KPI provides the average number of active PS DL RABs independent of transport channel type and data rate.

Calculation

```
vsum (NumActRABMean_Bgrd_DCH, NumActRABMean_Bgrd_HSDSCH,
NumActRABMean_Intact_DCH, NumActRABMean_Intact_HSDSCH,
NumActRABMean_Strm_DCH, 0)
```

Mean_Number_of_Active_PS_DL_RABs_on_DCH

This KPI provides the average number of active PS DL RABs on transport channel DCH independent of the data rate.

Calculation

```
vsum (NumActRABMean_Bgrd_DCH, NumActRABMean_Intact_DCH,
NumActRABMean_Strm_DCH, 0)
```

Mean_Number_of_Active_RABs_All_Services

This KPI provides the average number of active RABs independent of service type. PS RABs are derived from the DL mean number of active RABs.

Calculation

```
vsum (NumActRABMean_CSV12, NumActRABMean_CSD,
Mean_Number_of_Active_PS_DL_RABs, 0)
```

Mean_Number_of_HSDSCH_RABs_in_Cell_DCH

This KPI provides the average number of PS RABs on HSDSCH transport channel being in Cell_DCH state.

Calculation

```
vsum (MeanNbrRABCellDCH_Bgrd_HSDSCH, MeanNbrRABCellDCH_Intact_HSDSCH, 0)
```

Mean_Number_of_PS_DL_RABs_in_Cell_DCH

This KPI provides the average number of PS DL RABs independent of transport channel usage and data rate being in Cell_DCH state.

Calculation

```
vsum (MeanNbrRABCellDCH_Bgrd_DCH, MeanNbrRABCellDCH_Bgrd_HSDSCH,
MeanNbrRABCellDCH_Intact_DCH, MeanNbrRABCellDCH_Intact_HSDSCH,
MeanNbrRABCellDCH_Strm_DCH, 0)
```

Mean_Number_of_PS_RABs_on_DCH_in_Cell_DCH

This KPI provides the average number of PS DL RABs using the DCH transport channel being in Cell_DCH state.

Calculation

```
vsum (MeanNbrRABCellDCH_Bgrd_DCH, MeanNbrRABCellDCH_Intact_DCH,
MeanNbrRABCellDCH_Strm_DCH, 0)
```

Mean_Number_of_RABs_All_Services_in_Cell_DCH

This KPI provides the average number of RABs independent of service type being in Cell_DCH state. For PS service type the DL mean number of RABs in Cell_DCH is used.

Calculation

```
vsum (NumActRABMean_CSV12, NumActRABMean_CSD,
Mean_Number_of_PS_DL_RABs_in_Cell_DCH, 0)
```

MeanNbrRABCellDCH_Bgrd_DCH

New name:RAB_MeanCellDCH_Bgrd_DCH.Mean number of PS RABs in Cell_DCH with QoS class Background mapped on DCH

Calculation

```
RAB_MeanCellDCH_Bgrd_DCH
```

MeanNbrRABCellDCH_Bgrd_HSDSCH

New name:RAB_MeanCellDCH_Bgrd_HSDSCH.Mean number of PS RABs in Cell_DCH with QoS class Background mapped on HS-DSCH

Calculation

```
RAB_MeanCellDCH_Bgrd_HSDSCH
```

MeanNbrRABCellDCH_Intact_DCH

New name:RAB_MeanCellDCH_Intact_DCH.Mean number of PS RABs in Cell_DCH with QoS class Interactive mapped on DCH

Calculation

```
RAB_MeanCellDCH_Intact_DCH
```

MeanNbrRABCellDCH_Intact_HSDSCH

New name:RAB_MeanCellDCH_Intact_HSDSCH.Mean number of PS RABs in Cell_DCH with QoS class Interactive mapped on HS-DSCH

Calculation

```
RAB_MeanCellDCH_Intact_HSDSCH
```

MeanNbrRABCellDCH_PS128DL

New name:RAB_MeanCellDCH_PS128DL.Mean number of RABs in Cell_DCH for Service Type PS 128 kbps DL

Calculation

```
RAB_MeanCellDCH_PS128DL
```

MeanNbrRABCellDCH_PS128UL

New name:RAB_MeanCellDCH_PS128UL.Mean number of RABs in Cell_DCH for Service Type PS 128 kbps UL

Calculation

```
RAB_MeanCellDCH_PS128UL
```

MeanNbrRABCellDCH_PS32DL

New name:RAB_MeanCellDCH_PS32DL.Mean number of RABs in Cell_DCH for Service Type PS 32 kbps DL

Calculation

```
RAB_MeanCellDCH_PS32DL
```

MeanNbrRABCellDCH_PS32UL

New name:RAB_MeanCellDCH_PS32UL.Mean number of RABs in Cell_DCH for Service Type PS 32 kbps UL

Calculation

```
RAB_MeanCellDCH_PS32UL
```

MeanNbrRABCellDCH_PS384DL

New name:RAB_MeanCellDCH_PS384DL.Mean number of RABs in Cell_DCH for Service Type PS 384 kbps DL

Calculation

```
RAB_MeanCellDCH_PS384DL
```

MeanNbrRABCellDCH_PS64DL

New name:RAB_MeanCellDCH_PS64DL.Mean number of RABs in Cell_DCH for Service Type PS 64 kbps DL

Calculation

```
RAB_MeanCellDCH_PS64DL
```

MeanNbrRABCellDCH_PS64UL

New name:RAB_MeanCellDCH_PS64UL.Mean number of RABs in Cell_DCH for Service Type PS 64 kbps UL

Calculation

```
RAB_MeanCellDCH_PS64UL
```

MeanNbrRABCellDCH_PS8DL

New name:RAB_MeanCellDCH_PS8DL.Mean number of RABs in Cell_DCH for Service Type PS 8 kbps DL

Calculation

```
RAB_MeanCellDCH_PS8DL
```

MeanNbrRABCellDCH_PS8UL

New name:RAB_MeanCellDCH_PS8UL.Mean number of RABs in Cell_DCH for Service Type PS 8 kbps UL

Calculation

```
RAB_MeanCellDCH_PS8UL
```

MeanNbrRABCellDCH_Strm_DCH

New name:RAB_MeanCellDCH_Strm_DCH.Mean number of PS RABs in Cell_DCH with QoS Class Streaming mapped on DCH

Calculation

```
RAB_MeanCellDCH_Strm_DCH
```

MeanNumHSDPA_UE_AllocDCH

New name:RAB_MeanCellDCH_DCHLackHSDPARsrc.Mean Number of HSDPA UEs allocated on DCH instead of HS-DSCH due to lack of resources

Calculation

```
RAB_MeanCellDCH_DCHLackHSDPARsrc
```

MeanNumHSDPA_UE_AllocHS_DSCH

New name:RAB_MeanCellDCH_HS_DSCH.Mean Number of HSDPA UEs allocated on HS-DSCH

Calculation

```
RAB_MeanCellDCH_HS_DSCH
```

NumActRABMean_CSD

New name:RAB_MeanCellDCH_CSD.Mean Number of Active RABs for Service Type CSD

Calculation

```
RAB_MeanCellDCH_CSD
```

NumActRABMean_CSD_sum

New name:RAB_MeanCellDCH_CSD_sum.Mean Number of Active RABs for Service Type CSD. This peg provides Sum aggregation for the NumActRABMean.CSD measurement

Calculation

```
RAB_MeanCellDCH_CSD_sum
```

NumActRABMean_CSV12

New name:RAB_MeanCellDCH_CSV.Mean number of active RABs for Service Type CSV

Calculation

```
RAB_MeanCellDCH_CSV
```

NumActRABMean_CSV12_sum

New name:RAB_MeanCellDCH_CSV_sum.Mean number of active RABs for Service Type CSV. This peg provides Sum aggregation for the NumActRABMean.CSV12 measurement

Calculation

```
RAB_MeanCellDCH_CSV_sum
```

NumAttCMPrep

New name:CompMode_AttPrepare.Attempted Compressed Mode Preparations

Calculation

```
CompMode_AttPrepare
```

NumAttRelocPrepUMTS_GSM_DirRetry

New name:IRATHO_AttRelocPrep_DirRetry.Attempted Relocation Preparations for Inter-system Directed Retry

Calculation

```
IRATHO_AttRelocPrep_DirRetry
```

NumAttServCellChangeHSDSCH

New name:AttServCellChangeHSDSCH.Attempted Serving HS-DSCH Cell Changes

Calculation

```
AttServCellChangeHSDSCH
```

NumBadRACHTransBlock

New name:RACHTransBlock_Bad.Number of RACH Transport Blocks received with bad CRC

Calculation

```
RACHTransBlock_Bad
```

Number_of_Discarded_MAC_hs_Payload_Data

This KPI defines the Number of Discarded MAC-hs Payload Data. It is calculated from the Number of MAC-hs Payload Data sent to the radio minus the MAC-hs Payload Data positive acknowledged and the retransmitted MAC-hs Payload Data.

Calculation

```
vsum (MacHsPayloadData_Sent, -1.0 * MacHsPayloadDataACKed_Sent, -1.0 *
MacHsPayloadDataRetrans_Sent, 0)
```

Number_of_MAC_hs_Transport_Blocks_sent

This KPI defines the Number of MAC-hs PDUs (Transport Blocks) sent by the MAC-hs scheduler to the radio. It is calculated from the Number of MAC-hs PDUs which have been acknowledged with ACK and the Number of discarded MAC-hs PDUs.

Calculation

```
vsum (NumMacHsPduAck_Received, NumMacHsPdu_Discarded, 0)
```

NumCellUpdateRequest_CellReselect

New name:MM_CellUpdateReq_CellReselect.Number of Cell Update Requests for Cell Reselection.

Calculation

```
MM_CellUpdateReq_CellReselect
```

NumCellUpdateRequest_PagingResponse

New name:MM_CellUpdateReq_PagingResponse.Number of Cell Update Requests for Paging Responses

Calculation

```
MM_CellUpdateReq_PagingResponse
```

NumCellUpdateRequest_PeriodUpdate

New name:MM_CellUpdateReq_PeriodUpdate.Number of Cell Update Request with Cause Periodic Update in Cell FACH

Calculation

```
MM_CellUpdateReq_PeriodUpdate
```

NumCellUpdateRequest_ReenterSA

New name:MM_CellUpdateReq_ReenterSA.Number of Cell Update Requests for Re-entering SA

Calculation

```
MM_CellUpdateReq_ReenterSA
```

NumCellUpdateRequest_RLCError

New name:MM_CellUpdateReq_RLCError.Number of Cell Update Requests for RLC Error

Calculation

```
MM_CellUpdateReq_RLCError
```

NumCellUpdateRequest_RLF

New name:MM_CellUpdateReq_RLF.Number of Cell Update Requests for RLF

Calculation

```
MM_CellUpdateReq_RLF
```

NumCellUpdateRequest_ULData

New name:MM_CellUpdateReq_ULData.Number of Cell Update Requests for UL Data

Calculation

```
MM_CellUpdateReq_ULData
```

NUMDAYS

of days in Report

Calculation

```
DAYSINREPORT()
```

NumFailCMPrep

New name:CompMode_FailPrepare.Failed Compressed Mode Preparations

Calculation

```
CompMode_FailPrepare
```

NumFailRelocPrepUMTS_GSM_DirRetry_FailTarSys

New name:IRATHO_FailRelocPrep_DirRetry_FailTarSys.Failed Relocation Preparations for Inter-system Directed Retry due to Reloaction Failure in Target System

Calculation

```
IRATHO_FailRelocPrep_DirRetry_FailTarSys
```

NumFailServCellChangeHSDSCH_sum

New name:FailServCellChgHSDSCH_sum.Failed Serving HS-DSCH Cell Changes due to all causes

Calculation

```
FailServCellChgHSDSCH_sum
```

NumFailServCellChangeHSDSCH_transport_channel_reconf_failure

New name:FailServCellChgHSDSCH_TransChnRecfgFail.Failed Serving HS-DSCH Cell Changes due to transport channel reconfiguartion failure

Calculation

```
FailServCellChgHSDSCH_TransChnRecfgFail
```

NumFailServCellChangeHSDSCH_transport_channel_reconf_timeout

New name:FailServCellChgHSDSCH_TransChnRecfgTout.Failed Serving HS-DSCH Cell Changes due to transport channel reconfiguration timeout

Calculation

```
FailServCellChgHSDSCH_TransChnRecfgTout
```

NumGoodRACHTransBlock

New name:RACHTransBlock_Good.Number of RACH Transport Blocks received with good CRC

Calculation

```
RACHTransBlock_Good
```

NUMHOURS

of hours in Summation Data

Calculation

NumIntraRNCSHOAtt_CSD

New name:SHO_AttRLAddUESide_IntraRNC_CSD.Number of Intra-RNC Soft/Softer Handover Attempts for Service Type CS Data

Calculation

```
SHO_AttRLAddUESide_IntraRNC_CSD
```

NumIntraRNCSHOAtt_CSDandPS

New name:SHO_AttRLAddUESide_IntraRNC_CSDandPS.Number of Intra-RNC Soft/Softer Handover Attempts for Service Type Circuit Switched Data combined with any PS data rate

Calculation

```
SHO_AttRLAddUESide_IntraRNC_CSDandPS
```

NumIntraRNCSHOAtt_CSV

New name:SHO_AttRLAddUESide_IntraRNC_CSV.Number of Intra-RNC Soft/Softer Handover Attempts for CS Voice

Calculation

```
SHO_AttRLAddUESide_IntraRNC_CSV
```

NumIntraRNCSHOAtt_CSVandPS

New name:SHO_AttRLAddUESide_IntraRNC_CSVandPS.Number of Intra-RNC Soft/Softer Handover Attempts for Service Type Circuit Switched Voice combined with any PS data rate

Calculation

```
SHO_AttRLAddUESide_IntraRNC_CSVandPS
```

NumIntraRNCSHOAtt_PS_HighData

New name:SHO_AttRLAddUESide_IntraRNC_PSHighData.Number of Intra-RNC Soft/Softer Handover Attempts for PS with high data rate, >64kbps

Calculation

```
SHO_AttRLAddUESide_IntraRNC_PSHighData
```

NumIntraRNCSHOAtt_PS_LowData

New name:SHO_AttRLAddUESide_IntraRNC_PSLowData.Number of Intra-RNC Soft/Softer Handover Attempts for PS with low data rate, <=64kbps

Calculation

```
SHO_AttRLAddUESide_IntraRNC_PSLowData
```

NumIntraRNCSHOAtt_Signalling

New name:SHO_AttRLAddUESide_IntraRNC_Signalling.Number of Intra-RNC Soft/Softer Handover Attempts for signalling

Calculation

```
SHO_AttRLAddUESide_IntraRNC_Signalling
```

NumIntraRNCSHOFail_CSD

New name:SHO_FailRLAddUESide_IntraRNC_CSD.Number of Failed Intra-RNC Soft/Softer Handover Attempts for Service Type CS Data

Calculation

```
SHO_FailRLAddUESide_IntraRNC_CSD
```

NumIntraRNCSHOFail_CSDandPS

New name:SHO_FailRLAddUESide_IntraRNC_CSDandPS.Number of Failed Intra-RNC Soft/Softer Handover Attempts for Service Type CS Data combined with PS (any Data Rate)

Calculation

```
SHO_FailRLAddUESide_IntraRNC_CSDandPS
```

NumIntraRNCSHOFail_CSV

New name:SHO_FailRLAddUESide_IntraRNC_CSV.Number of Failed Intra-RNC Soft/Softer Handover Attempts for CS Voice

Calculation

```
SHO_FailRLAddUESide_IntraRNC_CSV
```

NumIntraRNCSHOFail_CSVandPS

New name:SHO_FailRLAddUESide_IntraRNC_CSVandPS.Number of Failed Intra-RNC Soft/Softer Handover Attempts for Service Type Circuit Switched Voice combined with any PS data rate

Calculation

```
SHO_FailRLAddUESide_IntraRNC_CSVandPS
```

NumIntraRNCSHOFail_PS_HighData

New name:SHO_FailRLAddUESide_IntraRNC_PSHighData.Number of Failed Intra-RNC Soft/Softer Handover Attempts for PS with high data rate, >64kbps

Calculation

```
SHO_FailRLAddUESide_IntraRNC_PSHighData
```

NumIntraRNCSHOFail_PS_LowData

New name:SHO_FailRLAddUESide_IntraRNC_PSLowData.Number of Failed Intra-RNC Soft/Softer Handover Attempts for PS with low data rate, <=64kbps

Calculation

```
SHO_FailRLAddUESide_IntraRNC_PSLowData
```

NumIntraRNCSHOFail_Signalling

New name:SHO_FailRLAddUESide_IntraRNC_Signalling.Number of Failed Intra-RNC Soft/ Softer Handover Attempts for signalling

Calculation

```
SHO_FailRLAddUESide_IntraRNC_Signalling
```

NumMacHsPdu_Discarded

New name:MAC_NumPdu_HS_Discard.Number of Transport Blocks discarded

Calculation

```
MAC_NumPdu_HS_Discard
```

NumMacHsPdu16QAM_Sent

New name:MAC_NumPdu_HS_16QAM.Number of MAC-hs PDUs with the 16QAM modulation scheme

Calculation

```
MAC_NumPdu_HS_16QAM
```

NumMacHsPduAck_Received

New name:MAC_NumPdu_HS_Ack.Number of Transport Blocks Acknowledged with ACK

Calculation

```
MAC_NumPdu_HS_Ack
```

NumMacHsPduNack_Received

New name:MAC_NumPdu_HS_Nack.Number of Transport Blocks Acknowledged with NACK

Calculation

```
MAC_NumPdu_HS_Nack
```

NumMacHsPduQPSK_Sent

New name:MAC_NumPdu_HS_QPSK.Number of MAC-hs PDUs with the QPSK modulation scheme

Calculation

```
MAC_NumPdu_HS_QPSK
```

NumMacHsPduRetrans_Sent

New name:MAC_NumPdu_HS_Retrans.Number of Transport Blocks retransmitted

Calculation

```
MAC_NumPdu_HS_Retrans
```

NumPageAttDiscard

New name:MM_PagAttDiscard. Number of Paging Attempts discarded by RNC

Calculation

```
MM_PagAttDiscard
```

NumRABMean_CMActive

New name:RAB_MeanCellDCH_CompMode.Mean Number of RABs in Compressed Mode

Calculation

```
RAB_MeanCellDCH_CompMode
```

NumRBReconfAtt_DCH_FACH

New name:UEStateTransAtt_DCH_FACH.Number of RB Reconfiguration Attempts: Cell DCH to Cell FACH

Calculation

```
UEStateTransAtt_DCH_FACH
```

NumRBReconfAtt_DCH_HSDSCH_sum

New name:ReconfAtt_DCH_HSDSCH.Total Number of RB Reconfiguration Attempts: DCH to HS-DSCH

Calculation

```
ReconfAtt_DCH_HSDSCH
```

NumRBReconfAtt_DCH_Inc

New name:DataRateAtt_Inc.Number of Data Rate Reconfiguration Attempts made by the RNC in Cell DCH to increase the data rate

Calculation

```
DataRateAtt_Inc
```

NumRBReconfAtt_DCH_PCH

New name:UEStateTransAtt_DCH_PCH.Number of attempted RB reconfigurations to move a UE from Cell DCH to URA PCH

Calculation

```
UEStateTransAtt_DCH_PCH
```

NumRBReconfAtt_FACH_DCH

New name:UEStateTransAtt_FACH_DCH.Number of RB Reconfiguration Attempts: Cell FACH to Cell DCH

Calculation

```
UEStateTransAtt_FACH_DCH
```

NumRBReconfAtt_FACH_DCH_HSDSCH

New name:UEStateTransAtt_FACH_DCH_HSDSCH.Number of RB Reconfiguration Attempts: Cell_FACH to Cell_DCH with HS-DSCH

Calculation

```
UEStateTransAtt_FACH_DCH_HSDSCH
```

NumRBReconfAtt_HSDSCH_DCH_sum

New name:RB_ReconfAtt_HSDSCH_DCH_sum.Total Number of RB Reconfiguration Attempts: HS-DSCH to DCH

Calculation

```
RB_ReconfAtt_HSDSCH_DCH_sum
```

NumRBReconfAtt_PCH_DCH

New name:UEStateTransAtt_PCH_DCH.Number of attempted RB reconfigurations to move a UE from URA PCH to Cell DCH

Calculation

```
UEStateTransAtt_PCH_DCH
```

NumRBReconfAtt_PCH_DCH_HSDSCH

New name:UEStateTransAtt_PCH_DCH_HSDSCH.Number of RB Reconfiguration Attempts: URA_PCH to Cell_DCH with HS-DSCH

Calculation

```
UEStateTransAtt_PCH_DCH_HSDSCH
```

NumRBReconfAtt_PCH_FACH

New name:UEStateTransAtt_PCH_FACH.Number of RB Reconfiguration Attempts: URA PCH to Cell FACH

Calculation

```
UEStateTransAtt_PCH_FACH
```

NumRBReconfFail_DCH_FACH

New name:UEStateTransFail_DCH_FACH.Number of Failed RB Reconfiguration Attempts: Cell DCH to Cell FACH

Calculation

```
UEStateTransFail_DCH_FACH
```

NumRBReconfFail_DCH_HSDSCH_causeDBC

New name:ReconfFail_DCH_HSDSCH_causeDBC.Number of Failed RB Reconfiguration Attempts: DCH to HS-DSCH due to DBC

Calculation

```
ReconfFail_DCH_HSDSCH_causeDBC
```

NumRBReconfFail_DCH_HSDSCH_sum

New name:ReconfFail_DCH_HSDSCH_sum.Total Number of Failed RB Reconfiguration: DCH to HS-DSCH

Calculation

```
ReconfFail_DCH_HSDSCH_sum
```

NumRBReconfFail_DCH_PCH

New name:UEStateTransFail_DCH_PCH.Number of failed Cell DCH to URA PCH transitions

Calculation

```
UEStateTransFail_DCH_PCH
```

Updated: 2009-06-23

NumRBReconfFail_FACH_DCH_HSDSCH

New name:UEStateTransFail_FACH_DCH_HSDSCH.Number of Failed RB Reconfiguration Attempts: Cell_FACH to Cell_DCH with HS-DSCH

Calculation

```
UEStateTransFail_FACH_DCH_HSDSCH
```

NumRBReconfFail_HSDSCH_DCH_causeDBC

New name:RB_ReconfFail_HSDSCH_DCH_causeDBC.Number of Failed RB Reconfiguration Attempts: HS-DSCH to DCH due to DBC

Calculation

```
RB_ReconfFail_HSDSCH_DCH_causeDBC
```

NumRBReconfFail_HSDSCH_DCH_sum

New name:RB_ReconfFail_HSDSCH_DCH_sum.Total Number of Failed RB Reconfiguration: HS-DSCH to DCH

Calculation

```
RB_ReconfFail_HSDSCH_DCH_sum
```

NumRBReconfFail_PCH_DCH

New name:UEStateTransFail_PCH_DCH.Number of failed URA PCH to Cell DCH transitions

Calculation

```
UEStateTransFail_PCH_DCH
```

NumRBReconfFail_PCH_DCH_HSDSCH

New name:UEStateTransFail_PCH_DCH_HSDSCH.Number of Failed RB Reconfiguration Attempts: URA_PCH to Cell_DCH with HS-DSCH

Calculation

```
UEStateTransFail_PCH_DCH_HSDSCH
```

NumRBReconfFail_PCH_FACH

New name:UEStateTransFail_PCH_FACH.Number of Failed RB Reconfiguration Attempts: URA PCH to Cell FACH

Calculation

```
UEStateTransFail_PCH_FACH
```

NumRLActAvg

New name:RLM_MeanActiveRL.Average number of Active Radio Links

Calculation

```
RLM_MeanActiveRL
```

NumRLActMax

New name:RLM_MaxActiveRL.Maximum number of Active Radio Links

Calculation

```
RLM_MaxActiveRL
```

NumRLReconfigAtt

New name:RLM_AttRLReconfig.Number of RL Reconfiguration Attempts

Calculation

```
RLM_AttRLReconfig
```

NumRLReconfigFail_NodeBRes

New name:RLM_FailRLReconfig_NodeBRes.Number of Failed Radio Link Reconfiguration Requests due to Failure at the Radio Level

Calculation

```
RLM_FailRLReconfig_NodeBRes
```

NumRLReconfigFail_sum

New name:RLM_FailRLReconfig_sum.Number of Failed Radio Link Reconfiguration Requests

Calculation

```
RLM_FailRLReconfig_sum
```

NumRLReconfigFail_Timeout

New name:RLM_FailRLReconfig_Timeout.Number of Failed Radio Link Reconfiguration Requests due to Timeout

Calculation

```
RLM_FailRLReconfig_Timeout
```

NumRLReconfigFail_TransRes

New name:RLM_FailRLReconfig_TransRes.Number of Failed Radio Link Reconfiguration Requests due to Failure at the Transport Network Level

Calculation

```
RLM_FailRLReconfig_TransRes
```

NumRRCConnDrop_CellResel_CellUp

New name:MM_RRCConnDrop_CellResel_CellUp.Number of Dropped RRC Connection due to no UE response during Cell Reselection

Calculation

```
MM_RRCConnDrop_CellResel_CellUp
```

NumRRCConnDrop_CellReselDRNC

New name:MM_RRC_ConnDrop_CellReselDRNC.Number of Pre-emptively Dropped RRC Connection due to DRNC move in URA_PCH

Calculation

```
MM_RRC_ConnDrop_CellReselDRNC
```

NumRRCConnDrop_DCH_HSDSCH

New name:MM_RRC_ConnDrop_DCH_HSDSCH.Number of Dropped RRC Connections during DCH to HS-DSCH reconfiguration.

Calculation

```
MM_RRC_ConnDrop_DCH_HSDSCH
```

NumRRCConnDrop_dch_pch_ReconfigFailure

New name:MM_RRC_ConnDrop_dch_pch_ReconfigFailure.Number of Dropped RRC Connections due to Failed Reconfiguration Response on Cell DCH to URA_PCH transition

Calculation

```
MM_RRC_ConnDrop_dch_pch_ReconfigFailure
```

NumRRCConnDrop_fach_dch_ReconfigFailure

New name:MM_RRC_ConnDrop_fach_dch_ReconfigFailure.Number of Dropped RRC Connections during Reconfiguration: Cell FACH to Cell DCH

Calculation

```
MM_RRC_ConnDrop_fach_dch_ReconfigFailure
```

NumRRCConnDrop_HSDSCH_DCH

New name:MM_RRC_ConnDrop_HSDSCH_DCH.Number of Dropped RRC Connections during HS-DSCH to DCH reconfiguration.

Calculation

```
MM_RRC_ConnDrop_HSDSCH_DCH
```

NumRRCConnDrop_Non_URA_PCH_timeout

New name:MM_RRC_ConnDrop_UE_Inactivity.Number of dropped RRC Connections due to non-URA_PCH timeout

Calculation

```
MM_RRC_ConnDrop_UE_Inactivity
```

NumRRCConnDrop_pch_dch_FailureIE

New name:MM_RRC_ConnDrop_pch_dch_FailureIE.Number of Dropped RRC Connections due to UE specified error on URA_PCH to Cell DCH transition

Calculation

```
MM_RRC_ConnDrop_pch_dch_FailureIE
```

NumRRCConnDrop_pch_dch_PhyChan

New name:MM_RRC_ConnDrop_pch_dch_PhyChan.Number of Dropped RRC Connections due to physical channel re-establishment failure on URA_PCH to Cell DCH transition

Calculation

```
MM_RRC_ConnDrop_pch_dch_PhyChan
```

NumRRCConnDrop_pch_dch_ReconfigFailure

New name:MM_RRC_ConnDrop_pch_dch_ReconfigFailure.Number of Dropped RRC Connections due to Failed Reconfiguration Response on URA_PCH to Cell DCH transition

Calculation

```
MM_RRC_ConnDrop_pch_dch_ReconfigFailure
```

NumRRCConnDrop_Period_CellUpdate

New name:RRCConnDrop_Period_CellUpdate.Number of Dropped RRC Connection due to Failed Periodical Cell Update in Cell FACH

Calculation

```
RRCConnDrop_Period_CellUpdate
```

NumRRCConnDrop_ReenterSA

New name:MM_RRC_ConnDrop_ReenterSA.Number of Dropped RRC Connections due to UE Re-entering SA

Calculation

```
MM_RRC_ConnDrop_ReenterSA
```

NumUraUpdateRequest_PeriodUpdate

New name:MM_UraUpdateReq_PeriodUpdate.Number of URA Update Requests for Periodic Update

Calculation

```
MM_UraUpdateReq_PeriodUpdate
```

NumUraUpdateRequest_UraChange

New name:MM_UraUpdateReq_UraChange.Number of URA Update Requests for URA Change

Calculation

```
MM_UraUpdateReq_UraChange
```

PS_Accessibility_Rate

PS Accessibility Rate (RRC / RAB) provides the rate for successful access to UTRAN resources for PS services. It is based on the Successful RRC Connection Establishment Rate for all services and the PS RAB Establishment Success Rate. Both KPIs are multiplied.

Calculation

```
(Successful_RRC_Connection_Establishment_Rate_including_repeated_attempts
* PS_RAB_Establishment_Success_Rate) / 100.0
```

PS_Call_Success_Rate

This KPI provides the rate for successful access to UTRAN resources for PS services. It is based on the Successful RRC Connection Establishment Rate for all services, the Standalone SRB Drop Rate and the PS RAB Establishment Success Rate. The three KPIs are multiplied to get the overall PS Call Success Rate.

Calculation

```
(Successful_RRC_Connection_Establishment_Rate_including_repeated_attempts)
* (1.0 - (Standalone_SRB_Drop_Rate / 100.0)) *
(PS_RAB_Establishment_Success_Rate / 100.0)
```

PS_Data_RAB_Drop_Rate

This KPI provides the percentage of successful established RABs that dropped due to any reason for any PS service type.

Calculation

```
(Total_PS_Dropped_RABs_cause_RLF * Total_RAB_Drop_Factor) * 100.0 / vsum
(PS_RAB_Attempts, -1.0 * PS_RAB_Establishment_Failures)
```

Updated: 2009-06-23

PS_Data_Service_Denied_ratio

This KPI provides the rate of attempted PS data calls, which were denied. It is based on the KPI PS Call Success Rate.

Calculation

```
(1.0 - PS_Call_Success_Rate)
```

PS_RAB_Attempts

This KPI provides the sum of all PS RAB attempts independent of the DCH or HSDSCH and data rate.

Calculation

```
vsum (RAB_AttEstabPS_DataRateLE64, RAB_AttEstabPS_DataRateGT64LE384,
RAB_AttEstabPS_DataRateGT384, 0)
```

PS_RAB_Cell_DCH_to_Active_Factor

This factor is used to calculate the difference between PS RABs being in Cell_DCH state and 'active' RABs', where active refers to data is actively transmitted on the RAB. The difference is based on the inactivity timer used in Cell_DCH, which is started on inactivity detection. On inactivity timer expiry the UE moves to Cell_FACH state.

Calculation

```
Mean_Number_of_Active_PS_DL_RABs * 1.0 /
Mean_Number_of_PS_DL_RABs_in_Cell_DCH
```

PS_RAB_Drop_Rate_due_to_RLF

This KPI provides the percentage of successful established PS RAB connections dropped due to radio link failure (RLF), where UTRAN failed to regain UL synchronisation on air interface after RLF timer expiry.

Calculation

```
Total_PS_Dropped_RABs_cause_RLF * 100.0 / vsum (PS_RAB_Attempts, -1.0 *
PS_RAB_Establishment_Failures)
```

PS_RAB_Establishment_Failures

This KPI provides the sum of all PS RAB establishment failures independent of DCH or HSDSCH and or data rate.

Calculation

```
vsum (RAB_FailEstabPS_DataRateLE64, RAB_FailEstabPS_DataRateGT64LE384,
RAB_FailEstabPS_DataRateGT384, 0)
```

PS_RAB_Establishment_Success_Rate

This KPI provides the percentage of RAB attempts for any PS call independent of DCH / HSDSCH usage and data rate, which succeed.

Calculation

```
vsum (PS_RAB_Attempts, -1.0 * PS_RAB_Establishment_Failures, 0) * 100.0 /
PS_RAB_Attempts
```

PS_RAB_Establishment_Success_Rate_for_Data_Rate_64_to_384

This KPI provides the percentage of RAB attempts for PS calls with data rate greater than 64 kbps and less or equal to 384 kbps in the DL, which succeed.

Calculation

```
vsum (RAB_AttEstabPS_DataRateGT64LE384, -1.0 *
RAB_FailEstabPS_DataRateGT64LE384, 0) * 100.0 /
RAB_AttEstabPS_DataRateGT64LE384
```

PS_RAB_Establishment_Success_Rate_for_Data_Rate_GT_384

This KPI provides the percentage of RAB attempts for PS calls with data rate greater than 384 kbps in the DL, which succeed.

Calculation

```
vsum (RAB_AttEstabPS_DataRateGT384, -1.0 * RAB_FailEstabPS_DataRateGT384,
0) * 100.0 / RAB_AttEstabPS_DataRateGT384
```

PS_RAB_Establishment_Success_Rate_for_Data_Rate_LE_64

This KPI provides the percentage of RAB attempts for PS calls with data rate less or equal to 64 kbps in the DL, which succeed.

Calculation

```
vsum (RAB_AttEstabPS_DataRateLE64, -1.0 * RAB_FailEstabPS_DataRateLE64, 0)
* 100.0 / RAB_AttEstabPS_DataRateLE64
```

PS_RAB_Establishment_Success_Rate_for_QoS_Background

This KPI provides the percentage of PS RAB attempts with class 'background' independent of DCH / HSDSCH usage and data rate, which succeed.

Calculation

```
vsum (RAB_AttEstabPS_Bgrd, -1.0 * RAB_FailEstabPSNoQueuing_Bgrd, 0) * 100.0
/ RAB_AttEstabPS_Bgrd
```

PS_RAB_Establishment_Success_Rate_for_QoS_Interactive

This KPI provides the percentage of PS RAB attempts with class 'interactive' independent of DCH / HSDSCH usage and data rate, which succeed.

Calculation

```
vsum (RAB_AttEstabPS_Intact, -1.0 * RAB_FailEstabPSNoQueuing_Intact, 0) *
100.0 / RAB_AttEstabPS_Intact
```

PS_RAB_Establishment_Success_Rate_for_QoS_Streaming

This KPI provides the percentage of PS RAB attempts with class 'streaming' independent of the data rate, which succeed.

Calculation

```
vsum (RAB_AttEstabPS_Strm, -1.0 * RAB_FailEstabPSNoQueuing_Strm, 0) * 100.0
/ RAB_AttEstabPS_Strm
```

RAB_Drop_Rate_due_to_Congestion

This KPI provides the percentage of successful established PS RABs that dropped due to congestion.

Calculation

```
RAB_RelPS_CauseCong * 100.0 / vsum (PS_RAB_Attempts, -1.0 *
PS_RAB_Establishment_Failures)
```

RAB_Drop_Rate_due_to_RLF

This KPI provides the percentage of any successful established RAB connection dropped due to radio link failure (RLF) for any service type, where UTRAN failed to regain UL synchronisation on air interface after RLF timer expiry.

Calculation

```
vsum (RAB_RelCS_Voice_CauseRLF, RAB_RelCS_Data_CauseRLF,
Total_PS_Dropped_RABs_cause_RLF, 0) * 100.0 / vsum (Total_RAB_Attempts, -
1.0 * Total_RAB_Establishment_Failures)
```

RAB_Establishment_Failure_Rate_due_to_Code_Starvation

This KPI provides the percentage of all RAB attempts independent of service type, which failed due to 'Code Starvation'.

Calculation

```
RABFailEstab_CodeStarv * 100.0 / Total_RAB_Attempts
```

RAB_Establishment_Failure_Rate_due_to_Overload

This KPI provides the percentage of RAB attempts, which failed due to traffic overload or congestion against the number of valid calls/sessions requested for all service types. Within the UTRAN a Radio Access Bearer (RAB) identifies a call/session.

Calculation

```
RABFailEstab_Load * 100.0 / Total_RAB_Attempts
```

RAB_Establishment_Failure_Rate_due_to_RB_Setup_Failure

This KPI provides the percentage of all RAB attempts independent of service type, which failed due to Radio Bearer Setup Failure. RB Setup Failure is detected by "Radio Bearer SetUp Failure" or Radio Bearer Reconfiguration Failure message from the UE causing the RNC to send a RAB Response message with cause 'Failure in the Radio Interface Procedure'

Calculation

```
RABFailEstab_RBSetupFail * 100.0 / Total_RAB_Attempts
```

RAB_Establishment_Failure_Rate_due_to_T3_Expiry

This KPI provides the percentage of all RAB attempts independent of service type, which failed due Timer T3 Expiry. Timer T3 (RADIO_BEARER_SETUP_TIMER) expires during a Radio Bearer Setup context causing the RNC to send a RAB Response message with cause 'Failure in the Radio Interface Procedure'

Calculation

```
RABFailEstab_T3 * 100.0 / Total_RAB_Attempts
```

RAB_Establishment_Success_Rate

This KPI provides the percentage of all RAB attempts independent of service type and data rate, which succeed.

Calculation

```
vsum (Total_RAB_Attempts, -1.0 * Total_RAB_Establishment_Failures, 0) *
100.0 / Total_RAB_Attempts
```

RAB_FailEstabPS_DataRateGT384

New name:RAB_FailEstabPSNoQueuing_DataRateGT384.Number of RAB Establishment Failures for PS > 384 kbps

Calculation

```
RAB_FailEstabPSNoQueuing_DataRateGT384
```

RAB_FailEstabPS_DataRateGT64LE384

New name:RAB_FailEstabPSNoQue_DataRateGT64LE384.Number of RAB Establishment Failures for PS data rates 64<x<=384 kbps

Calculation

```
RAB_FailEstabPSNoQue_DataRateGT64LE384
```

RAB_FailEstabPS_DataRateLE64

New name:RAB_FailEstabPSNoQueuing_DataRateLE64.Number of RAB Establishment Failures for PS data rates <= 64 kbps

Calculation

```
RAB_FailEstabPSNoQueuing_DataRateLE64
```

RAB_RelPS_HSDSCH_CauseRLF_ReconfFail

New name:RAB_Drop_PS_HSDSCH_CauseULRLF_ReconfFail.Number of Dropped PS RABs mapped to HS-DSCH caused by unsuccessful reconfiguration from HS_DSCH to DCH following RLF (loss of synchronisation)

Calculation

```
RAB_Drop_PS_HSDSCH_CauseULRLF_ReconfFail
```

RACH_Transport_Block_Good_CRC_Rate

The RACH Transport Block Good CRC Rate is the percentage of RACH Transport Blocks with Good CRC.

Calculation

```
NumGoodRACHTransBlock * 100.0 / vsum (NumGoodRACHTransBlock, Num-
BadRACHTransBlock)
```

Radio_Link_Addition_Success_Rate_on_Iub

This KPI provides the performance of the radio link addition procedure on the Iub per target cell.

Calculation

```
vsum (SHO_AttRLAddIubUTRANSide, -1.0 * SHO_FailRLAddIubUTRANSide_sum, 0) *
100.0 / SHO_AttRLAddIubUTRANSide
```

Radio_Link_Setup_Failure_Rate_on_Iub_NodeB_Resource

This KPI provides the percentage of the radio link setup attempts (sent by the RNC to the Node B) for all service types that failed during the Radio Link establishment procedure due to missing CE resources in the NodeB on the Iub interface.

Calculation

```
SHO_FailRLSetupIubUTRANSide_NodeBRes * 100.0 / SHO_AttRLSetupIubUTRANSide
```

Radio_Link_Setup_Failure_Rate_on_Iub_Transport_Resource

This KPI provides the percentage of the radio link setup attempts (sent by the RNC to the Node B) for all service types that failed during the Radio Link establishment procedure due to missing binding ids on the Iub interface.

Calculation

```
SHO_FailRLSetupIubUTRANSide_TransRes * 100.0 / SHO_AttRLSetupIubUTRANSide
```

Radio_Link_Setup_Success_Rate_on_Iub

This KPI provides the percentage of the radio link setup attempts (sent by the RNC to the Node B) for all service types that have been successfully set up during the Radio Link establishment procedure on the Iub interface. The number of successful radio link reconfigurations or successful radio link additions is not measured here.

Calculation

```
vsum (SHO_AttRLSetupIubUTRANSide, -1.0 * SHO_FailRLSetupIubUTRANSide_sum,
0) * 100.0 / SHO_AttRLSetupIubUTRANSide
```

Relocation_Preparation_for_CS_UMTS_to_GSM_HHO_Success_Rate

This KPI indicates the relocation preparation performance for UMTS to GSM HHO for CS calls.

Calculation

```
vsum (IRATHO_AttRelocPrepOutCS, -1.0 * IRATHO_FailRelocPrepOutCS_sum, 0) *
100.0 / IRATHO_AttRelocPrepOutCS
```

Relocation_Preparation_UMTS_to_GSM_Failure_Rate_no_RR_available_in_Target_System

This KPI indicates the relocation preparation failure rate due to missing radio resource in the target system for UMTS to GSM HHO for CS calls.

Calculation

```
IRATHO_FailRelocPrepOutCS_NoRRTarSys * 100.0 / IRATHO_AttRelocPrepOutCS
```

Relocation_Preparation_UMTS_to_GSM_Failure_Rate_Relocation_Failure_in_Target_System

This KPI indicates the relocation preparation failure rate due to relocation failure in the target system for UMTS to GSM HHO for CS calls.

Calculation

```
IRATHO_FailRelocPrepOutCS_FailTarSys * 100.0 / IRATHO_AttRelocPrepOutCS
```

Relocation_Preparation_UMTS_to_GSM_Failure_Rate_Relocation_not_Supported_in_Target_System

This KPI indicates the relocation preparation failure rate due to relocation not supported in the target RNC or target system for UMTS to GSM HHO for CS calls.

Calculation

```
IRATHO_FailRelocPrepOutCS_NotSupTarSys * 100.0 / IRATHO_AttRelocPrepOutCS
```

Relocation_Preparation_UMTS_to_GSM_Failure_Rate_Relocation_Target_not_allowed

This KPI indicates the relocation preparation failure rate due to relocation target not allowed for UMTS to GSM HHO for CS calls.

Calculation

```
IRATHO_FailRelocPrepOutCS_TarNotAllowed * 100.0 / IRATHO_AttRelocPrepOutCS
```

Relocation_Preparation_UMTS_to_GSM_Failure_Rate_T_RELOCprep_Expiry

This KPI indicates the relocation preparation failure rate due to supervision timer expiry (T_RELOCprep) for UMTS to GSM HHO for CS calls.

Calculation

```
IRATHO_FailRelocPrepOutCS_T_RELOCprep_exp * 100.0 /
IRATHO_AttRelocPrepOutCS
```

RF_Rtwp_GT100_LE99

New name:RF_RTWP_LE99.Received Total Wideband Power RTWP Distribution provides the number of 100ms samples that the RTWP was >-100 & <=-99dBm

Calculation

```
RF_RTWP_LE99
```

RF_Rtwp_GT101_LE100

New name:RF_RTWP_LE100.Received Total Wideband Power RTWP Distribution provides the number of 100ms samples that the RTWP was >-101 & <=-100dBm

Calculation

```
RF_RTWP_LE100
```

RF_Rtwp_GT102_LE101

New name:RF_RTWP_LE101.Received Total Wideband Power RTWP Distribution provides the number of 100ms samples that the RTWP was >-102 & <=-101dBm

Calculation

```
RF_RTWP_LE101
```

RF_Rtwp_GT103_LE102

New name:RF_RTWP_LE102.Received Total Wideband Power RTWP Distribution provides the number of 100ms samples that the RTWP was >-103 & <=-102dBm

Calculation

```
RF_RTWP_LE102
```

RF_Rtwp_GT104_LE103

New name:RF_RTWP_LE103.Received Total Wideband Power RTWP Distribution provides the number of 100ms samples that the RTWP was >-104 & <=-103dBm

Calculation

```
RF_RTWP_LE103
```

RF_Rtwp_GT105_LE104

New name:RF_RTWP_LE104.Received Total Wideband Power RTWP Distribution provides the number of 100ms samples that the RTWP was >-105 & <=-104dBm

Calculation

```
RF_RTWP_LE104
```

RF_Rtwp_GT106_LE105

New name:RF_RTWP_LE105.Received Total Wideband Power RTWP Distribution provides the number of 100ms samples that the RTWP was >-106 & <=-105dBm

Calculation

```
RF_RTWP_LE105
```

RF_Rtwp_GT107_LE106

New name:RF_RTWP_LE106.Received Total Wideband Power RTWP Distribution provides the number of 100ms samples that the RTWP was >-107 & <=-106dBm

Calculation

```
RF_RTWP_LE106
```

RF_Rtwp_GT108_LE107

New name:RF_RTWP_LE107.Received Total Wideband Power RTWP Distribution provides the number of 100ms samples that the RTWP was >-108 & <=-107dBm

Calculation

```
RF_RTWP_LE107
```

RF_Rtwp_GT109_LE108

New name:RF_RTWP_LE108.Received Total Wideband Power RTWP Distribution provides the number of 100ms samples that the RTWP was >-109 & <=-108dBm

Calculation

```
RF_RTWP_LE108
```

RF_Rtwp_GT110_LE109

New name:RF_RTWP_LE109.Received Total Wideband Power RTWP Distribution provides the number of 100ms samples that the RTWP was >-110 & <=-109dBm

Calculation

```
RF_RTWP_LE109
```

RF_Rtwp_GT91_LE90

New name:RF_RTWP_LE90.Received Total Wideband Power RTWP Distribution provides the number of 100ms samples that the RTWP was >-91 & <=-90dBm

Calculation

```
RF_RTWP_LE90
```

RF_Rtwp_GT92_LE91

New name:RF_RTWP_LE91.Received Total Wideband Power RTWP Distribution provides the number of 100ms samples that the RTWP was >-92 & <=-91dBm

Calculation

```
RF_RTWP_LE91
```

RF_Rtwp_GT93_LE92

New name:RF_RTWP_LE92.Received Total Wideband Power RTWP Distribution provides the number of 100ms samples that the RTWP was >-93 & <=-92dBm

Calculation

```
RF_RTWP_LE92
```

RF_Rtwp_GT94_LE93

New name:RF_RTWP_LE93.Received Total Wideband Power RTWP Distribution provides the number of 100ms samples that the RTWP was >-94 & <=-93dBm

Calculation

```
RF_RTWP_LE93
```

RF_Rtwp_GT95_LE94

New name:RF_RTWP_LE94.Received Total Wideband Power RTWP Distribution provides the number of 100ms samples that the RTWP was >-95 & <=-94dBm

Calculation

```
RF_RTWP_LE94
```

RF_Rtwp_GT96_LE95

New name:RF_RTWP_LE95.Received Total Wideband Power RTWP Distribution provides the number of 100ms samples that the RTWP was >-96 & <=-95dBm

Calculation

```
RF_RTWP_LE95
```

RF_Rtwp_GT97_LE96

New name:RF_RTWP_LE96.Received Total Wideband Power RTWP Distribution provides the number of 100ms samples that the RTWP was >-97 & <=-96dBm

Calculation

```
RF_RTWP_LE96
```

RF_Rtwp_GT98_LE97

New name:RF_RTWP_LE97.Received Total Wideband Power RTWP Distribution provides the number of 100ms samples that the RTWP was >-98 & <=-97dBm

Calculation

```
RF_RTWP_LE97
```

RF_Rtwp_GT99_LE98

New name:RF_RTWP_LE98.Received Total Wideband Power RTWP Distribution provides the number of 100ms samples that the RTWP was >-99 & <=-98dBm

Calculation

```
RF_RTWP_LE98
```

RF_TxPwr_GT0_LE10

New name:RF_TxPwr_AllCodes_LE10.Transmitted Carrier Power Distribution provides the number of 100ms samples that the percentage of Tx power was >0% & <=10%

Calculation

```
RF_TxPwr_AllCodes_LE10
```

RF_TxPwr_GT10_LE20

New name:RF_TxPwr_AllCodes_LE20.Transmitted Carrier Power Distribution provides the number of 100ms samples that the percentage of Tx power was >10% & <=20%

Calculation

```
RF_TxPwr_AllCodes_LE20
```

RF_TxPwr_GT20_LE30

New name:RF_TxPwr_AllCodes_LE30.Transmitted Carrier Power Distribution provides the number of 100ms samples that the percentage of Tx power was >20% & <=30%

Calculation

```
RF_TxPwr_AllCodes_LE30
```

RF_TxPwr_GT30_LE40

New name:RF_TxPwr_AllCodes_LE40.Transmitted Carrier Power Distribution provides the number of 100ms samples that the percentage of Tx power was >30% & <=40%

Calculation

```
RF_TxPwr_AllCodes_LE40
```

RF_TxPwr_GT40_LE50

New name:RF_TxPwr_AllCodes_LE50.Transmitted Carrier Power Distribution provides the number of 100ms samples that the percentage of Tx power was >40% & <=50%

Calculation

```
RF_TxPwr_AllCodes_LE50
```

RF_TxPwr_GT50_LE60

New name:RF_TxPwr_AllCodes_LE60.Transmitted Carrier Power Distribution provides the number of 100ms samples that the percentage of Tx power was >50% & <=60%

Calculation

```
RF_TxPwr_AllCodes_LE60
```

RF_TxPwr_GT60_LE70

New name:RF_TxPwr_AllCodes_LE70.Transmitted Carrier Power Distribution provides the number of 100ms samples that the percentage of Tx power was >60% & <=70%

Calculation

```
RF_TxPwr_AllCodes_LE70
```

RF_TxPwr_GT70_LE80

New name:RF_TxPwr_AllCodes_LE80.Transmitted Carrier Power Distribution provides the number of 100ms samples that the percentage of Tx power was >70% & <=80%

Calculation

```
RF_TxPwr_AllCodes_LE80
```

RF_TxPwr_GT80_LE90

New name:RF_TxPwr_AllCodes_LE90.Transmitted Carrier Power Distribution provides the number of 100ms samples that the percentage of Tx power was >80% & <=90%

Calculation

```
RF_TxPwr_AllCodes_LE90
```

RF_TxPwr_GT90_LE100

New name:RF_TxPwr_AllCodes_LE100.Transmitted Carrier Power Distribution provides the number of 100ms samples that the percentage of Tx power was >90% & <=100%

Calculation

```
RF_TxPwr_AllCodes_LE100
```

RL_Blocking

This KPI provides the rate of attempted RL establishment attempts, which were denied due to radio resource shortages. RL setup and addition attempts are both considered for RL blocking. RL blocking is derived from failure attempts due to missing transport (binding id) and NodeB (CE) resources.

Calculation

```
vsum (SHO_FailRLSetupIubUTRANSide_NodeBRes,
SHO_FailRLSetupIubUTRANSide_TransRes, SHO_FailRLAddIubUTRANSide_NodeBRes,
SHO_FailRLAddIubUTRANSide_TransRes, 0) * 1.0 / vsum
(SHO_AttRLSetupIubUTRANSide, SHO_AttRLAddIubUTRANSide)
```

RL_Reconfiguration_Failure_Rate_Radio_Level

This KPI provides the percentage of the RL reconfiguration attempts that failed due to Radio Network Layer.

Calculation

```
NumRLReconfigFail_NodeBRes * 100.0 / NumRLReconfigAtt
```

RL_Reconfiguration_Failure_Rate_Timeout

This KPI provides the percentage of the RL reconfiguration attempts that failed due to timeout (T1 or T4 expiry).

Calculation

```
NumRLReconfigFail_Timeout * 100.0 / NumRLReconfigAtt
```

RL_Reconfiguration_Failure_Rate_Transport_Network_Level

This KPI provides the percentage of the RL reconfiguration attempts that failed due to Transport Network Layer.

Calculation

```
NumRLReconfigFail_TransRes * 100.0 / NumRLReconfigAtt
```

RRC_AttConnEstab_OrigCallVoice

New name:RRC_AttConnEstab_OrigConvCall.Number of Attempted RRC Connections Establishments for Originating Voice Calls

Calculation

```
RRC_AttConnEstab_OrigConvCall
```

RRC_AttConnEstab_TermCallVoice

New name:RRC_AttConnEstab_TermConvCall.Number of Attempted RRC Connections Establishments for Terminating Voice Calls

Calculation

```
RRC_AttConnEstab_TermConvCall
```

RRC_AttConnRel_Drop_RLF

New name:RRC_AttConnRel_Drop_ULRLF. Number of Dropped RRC Connections caused by Radio Link Failure

Calculation

```
RRC_AttConnRel_Drop_ULRLF
```

RRC_Connection_Drop_Rate

This KPI provides the rate of all RRC connection Requests successfully established that dropped.

Calculation

```
RRC_AttConnRel_Drop_sum * 100.0 / RRC_SuccConnEstab_sum
```

RRC_Connection_Drop_Rate_caused_by_RLF

This KPI reflects the rate of RRC connections dropped due to radio link failure (RLF), where UTRAN failed to regain UL synchronisation on air interface after RLF timer expiry.

Calculation

```
RRC_AttConnRel_Drop_RLF * 100.0 / RRC_SuccConnEstab_sum
```

RRC_Connection_Drop_Rate_DCH_PCH_due_to_Failed_Reconfiguration_Response

This KPI reflects the rate of RRC connections dropped due to failed reconfiguration response message going from Cell DCH to URA_PCH.

Calculation

```
NumRRCConnDrop_dch_pch_ReconfigFailure * 100.0 / RRC_SuccConnEstab_sum
```

RRC_Connection_Drop_Rate_due_to_DCH_to_HSDSCH_Reconfiguration_Failure

The 'RRC Connection Dropping Rate due to DCH to HSDSCH Reconfiguration Failure' provides the percentage of dropped RRC Connections due to failed DCH to HSDSCH reconfiguration.

Calculation

```
NumRRCConnDrop_DCH_HSDSCH * 100.0 / RRC_SuccConnEstab_sum
```

RRC_Connection_Drop_Rate_due_to_Failed_Periodic_Cell_Update_in_Cell_FACH

The 'RRC Connection Drop Rate due to Failed Periodic Cell Update in Cell_FACH' provides the percentage of dropped RRC Connections due to a UE failing to respond with a Periodical Cell Update message in Cell FACH.

Calculation

```
NumRRCConnDrop_Period_CellUpdate * 100.0 / RRC_SuccConnEstab_sum
```

RRC_Connection_Drop_Rate_due_to_HSDSCH_to_DCH_Reconfiguration_Failure

The 'RRC Connection Dropping Rate due to HSDSCH to DCH Reconfiguration Failure' provides the percentage of dropped RRC Connections due to failed HSDSCH to DCH reconfiguration.

Calculation

```
NumRRCConnDrop_HSDSCH_DCH * 100.0 / RRC_SuccConnEstab_sum
```

RRC_Connection_Drop_Rate_due_to_no_UE_response_during_cell_reselection

The 'RRC Connection Dropping Rate due to no UE response during cell reselection' provides the percentage of dropped RRC Connections due to no UE response during cell reselection procedure.

Calculation

```
NumRRCConnDrop_CellResel_CellUp * 100.0 / RRC_SuccConnEstab_sum
```

RRC_Connection_Drop_Rate_due_to_nonURA_PCH_Timeout

This KPI reflects the rate of RRC connections dropped due to UE inactivity either

Calculation

```
NumRRCConnDrop_Non_URA_PCH_timeout * 100.0 / RRC_SuccConnEstab_sum
```

RRC_Connection_Drop_Rate_due_to_UE_Reentering_SA

This KPI provides the dropped RRC connection rate due to reception of Cell Update request messages with cause 'Re-enter Service Area'. This is caused by a UE in Cell FACH losing communication with UTRAN and regaining communication before expiry of T317.

Calculation

```
NumCellUpdateRequest_ReenterSA * 100.0 / RRC_SuccConnEstab_sum
```

RRC_Connection_Drop_Rate_due_to_UE_RLC_Unrecoverable_Error

This KPI provides the dropped RRC connection rate due to reception of Cell Update message with cause RLC Unrecoverable Error due to a failure in RLC.

Calculation

```
NumCellUpdateRequest_RLCError * 100.0 / RRC_SuccConnEstab_sum
```

RRC_Connection_Drop_Rate_due_to_UE_Specific_Error

This KPI reflects the rate of RRC connections dropped due to UE specified error on URA_PCH to Cell DCH transition.

Calculation

```
NumRRCConnDrop_pch_dch_FailureIE * 100.0 / RRC_SuccConnEstab_sum
```

RRC_Connection_Drop_Rate_FACH_DCH_due_to_Failed_Reconfiguration_Response

This KPI reflects the rate of RRC connections dropped due to failed reconfiguration response message going from Cell FACH to Cell_DCH.

Calculation

```
NumRRCConnDrop_fach_dch_ReconfigFailure * 100.0 / RRC_SuccConnEstab_sum
```

RRC_Connection_Drop_Rate_PCH_DCH_due_to_Failed_Reconfiguration_Response

This KPI reflects the rate of RRC connections dropped due to failed reconfiguration response message going from URA_PCH to Cell DCH.

Calculation

```
NumRRCConnDrop_pch_dch_ReconfigFailure * 100.0 / RRC_SuccConnEstab_sum
```

RRC_Connection_Drop_Rate_PCH_DCH_due_to_Physical_Channel_Reestablishment_Failure

This KPI reflects the rate of RRC connections dropped going from URA_PCH to Cell DCH due to physical channel re-establishment failure.

Calculation

```
NumRRCConnDrop_pch_dch_PhyChan * 100.0 / RRC_SuccConnEstab_sum
```

RRC_Connection_Establishment_Failures_including_failures_due_to_repeated_attempts

This KPI provides the total number of RRC Connection failures including failed attempts due to repeated attempts.

Calculation

```
vsum (RRC_AttConnEstab_sum, -1.0 * RRC_SuccConnEstab_sum, 0)
```

SHO_AttRLAddIubUTRANSide

New name:RLM_AttRLAddIub.Attempted Radio Link Additions on Iub (UTRAN side)

Calculation

```
RLM_AttRLAddIub
```

SHO_AttRLSetupIubUTRANSide

New name:RLM_AttRLSetupIub.Attempted Radio Link Setups on Iub (UTRAN side)

Calculation

```
RLM_AttRLSetupIub
```

SHO_FailRLAddIubUTRANSide_TransRes

New name:RLM_FailRLAddIub_TransRes.Failed Radio Link Addition Attempts on Iub (UTRAN side) due to Transmission Resources

Calculation

```
RLM_FailRLAddIub_TransRes
```

Standalone_SRB_Drop_Rate

This KPI provides the percentage of dropped RRC connections (SRBs) established for user calls between the time the RRC connection is established and the arrival of the first RAB Assignment from the CN against the number of successful RRC Connection Establishments for calls being setup.

Calculation

```
RRC_AttConnRel_Drop_CallSetup * 100.0 / RRC_SuccConnEstab_call
```

Successful_Active_Set_Update_Addition_Rate_Utrancell

The 'Successful Active Set Update Addition Rate' provides the percentage of successful performed active set update procedures in the context to add / replace a radio link.

Calculation

```
vsum (Total_Number_of_Intra_RNC_SHO_Attempts, -1.0 *
Total_Number_of_Intra_RNC_SHO_Failures, 0) * 100.0 /
Total_Number_of_Intra_RNC_SHO_Attempts
```

Successful_Active_Set_Update_Deletion_Rate

The 'Successful Active Set Update Deletion Rate' provides the percentage of successful performed active set update procedures in the context to delete a radio link from the active set.

Calculation

```
SHO_SuccRLDelUESide * 100.0 / SHO_AttRLDelUESide
```

Successful_Performed_Intra_RNC_SHO_Rate_High_Datarate

The Intra RNC SHO Success Rate for High Datarate is the percentage of the successful performed intra RNC SHO with service type PS with Datarate > 64k.

Calculation

```
vsum (NumIntraRNCSHOAtt_PS_HighData, -1.0 * NumIntraRNCSHOFail_PS_HighData,
0) * 100.0 / NumIntraRNCSHOAtt_PS_HighData
```

Successful_Performed_Intra_RNC_SHO_Rate_Signalling

The Intra RNC SHO Success Rate for Signalling is the percentage of the successful performed intra RNC SHO for Signalling.

Calculation

```
vsum (NumIntraRNCSHOAtt_Signalling, -1.0 * NumIntraRNCSHOFail_Signalling,
0) * 100.0 / NumIntraRNCSHOAtt_Signalling
```

Successful_RRC_Connection_Establishment_Rate_including_repeated_attempts

This KPI provides the percentage of RRC connection request messages sent by the UE that have been successfully established. Repeated RRC connection attempts from the same UE are included. An RRC connection is identified as successfully established by the 'RRC connection setup complete' message.

Calculation

```
RRC_SuccConnEstab_sum * 100.0 / RRC_AttConnEstab_sum
```

Total_Intra_RNC_SHO_Success_Rate

The Total Intra RNC SHO Success Rate is the percentage of the successful performed intra RNC SHO.

Calculation

```
vsum (NumIntraRNCSHOAtt_CSV, NumIntraRNCSHOAtt_CSD,
NumIntraRNCSHOAtt_CSVandPS, NumIntraRNCSHOAtt_CSDandPS,
NumIntraRNCSHOAtt_PS_LowData, NumIntraRNCSHOAtt_PS_HighData,
NumIntraRNCSHOAtt_Signalling, -1.0 * NumIntraRNCSHOFail_CSV, -1.0 *
NumIntraRNCSHOFail_CSD, -1.0 * NumIntraRNCSHOFail_CSVandPS, -1.0 *
NumIntraRNCSHOFail_CSDandPS, -1.0 * NumIntraRNCSHOFail_PS_LowData, -1.0 *
NumIntraRNCSHOFail_PS_HighData, -1.0 * NumIntraRNCSHOFail_Signalling, 0) *
100.0 / vsum (NumIntraRNCSHOAtt_CSV, NumIntraRNCSHOAtt_CSD,
NumIntraRNCSHOAtt_CSVandPS, NumIntraRNCSHOAtt_CSDandPS,
NumIntraRNCSHOAtt_PS_LowData, NumIntraRNCSHOAtt_PS_HighData,
NumIntraRNCSHOAtt_Signalling)
```

Total_Number_of_Cell_Update_Requests

This KPI provides the total number of 'Cell Updates' received derived from the sum of all cell update per cause counters.

Calculation

```
vsum (NumCellUpdateRequest_PagingResponse, NumCellUpdateRequest_ULData,
NumCellUpdateRequest_CellReselect, NumCellUpdateRequest_ReenterSA,
NumCellUpdateRequest_RLF, NumCellUpdateRequest_RLCError,
NumCellUpdateRequest_PeriodUpdate, 0)
```

Total_Number_of_Intra_RNC_SHO_Attempts

The total number of intra RNC SHO attempts is calculated by summing up all intra RNC SHO attempts per RL type.

Calculation

```
vsum (NumIntraRNCSHOAtt_CSV, NumIntraRNCSHOAtt_CSD,
NumIntraRNCSHOAtt_CSVandPS, NumIntraRNCSHOAtt_CSDandPS,
NumIntraRNCSHOAtt_PS_LowData, NumIntraRNCSHOAtt_PS_HighData,
NumIntraRNCSHOAtt_Signalling, 0)
```

Total_Number_of_Intra_RNC_SHO_Failures

The total number of intra RNC SHO failures is calculated by summing up all intra RNC SHO failures per RL type.

Calculation

```
vsum (NumIntraRNCSHOFail_CSV, NumIntraRNCSHOFail_CSD,
NumIntraRNCSHOFail_CSVandPS, NumIntraRNCSHOFail_CSDandPS,
NumIntraRNCSHOFail_PS_LowData, NumIntraRNCSHOFail_PS_HighData,
NumIntraRNCSHOFail_Signalling, 0)
```

Total_Number_of_UL_CS_Data_Transport_Blocks

This KPI provides the total Number of UL CS Data Transport Blocks on a per cell basis. In order to derive the cell basis from the RNC based transport block PM, the 'cell factor' is multiplied.

Calculation

```
NodeB.RNC.NumTransBlockTotUL_CSD * (NumActRABMean_CSD * 1.0 / sum
(NodeB.RNC.NodeB.UtranCell, NumActRABMean_CSD))
```

Total_Number_of_UL_CS_Speech_Transport_Blocks

This KPI provides the total Number of UL CS Speech Transport Blocks on a per cell basis. In order to derive the cell basis from the RNC based transport block PM, the 'cell fraction' is multiplied.

Calculation

```
NodeB.RNC.NumTransBlockTotUL_CSV * (NumActRABMean_CSV12 * 1.0 / sum
(NodeB.RNC.NodeB.UtranCell, NumActRABMean_CSV12))
```

Total_Number_of_URA_Update_Requests

This KPI reflects the 'Total Number of URA Update Requests'.

Calculation

```
vsum (NumUraUpdateRequest_UraChange, NumUraUpdateRequest_PeriodUpdate, 0)
```

Total_PS_Dropped_RABs_cause_RLF

This KPI provides the total number (sum) of all PS RABs dropped due to radio link failure (RLF), where UTRAN failed to regain UL synchronisation on air interface after RLF timer expiry.

Calculation

```
vsum (RAB_RelPS_DCH_CauseRLF, RAB_RelPS_HSDSCH_CauseRLF,
RAB_RelPS_HSDSCH_CauseRLF_ReconfFail, 0)
```

Total_RAB_Attempts

This KPI provides the sum of all RAB attempts independent of the service type or data rate.

Calculation

```
vsum (RAB_AttEstabCS_ConvVoice, RAB_AttEstabCS_ConvData,
RAB_AttEstabPS_DataRateLE64, RAB_AttEstabPS_DataRateGT64LE384,
RAB_AttEstabPS_DataRateGT384, 0)
```

Total_RAB_Drop_Factor

The 'Total to RLF Drop RAB Factor' gives the relation between 'total number of dropped RABs' to 'total number of dropped RABs due RLF'.

Calculation

```
RAB_Rel_Drop_sum * 1.0 / vsum (RAB_RelCS_Voice_CauseRLF,
RAB_RelCS_Data_CauseRLF, RAB_RelPS_DCH_CauseRLF,
RAB_RelPS_HSDSCH_CauseRLF, RAB_RelPS_HSDSCH_CauseRLF_ReconfFail)
```

Total_RAB_Drop_Rate

This KPI provides the percentage of successful established RABs for all service types, which drop. This includes any abnormal RAB release including drops caused by Operator invoked OAM operations (e.g. 'RESET' and 'LOCK') and in case pre-emption forces a RAB connection to be released.

Calculation

```
RAB_Rel_Drop_sum * 100.0 / vsum (Total_RAB_Attempts, -1.0 *
Total_RAB_Establishment_Failures)
```

Total_RAB_Establishment_Failures

This KPI provides the sum of all RAB attempts independent of the service type or data rate.

Calculation

```
vsum (RAB_FailEstabCSNoQueuing_ConvVoice,
RAB_FailEstabCSNoQueuing_ConvData, RAB_FailEstabPS_DataRateLE64,
RAB_FailEstabPS_DataRateGT64LE384, RAB_FailEstabPS_DataRateGT384, 0)
```

Total_Radio_Link_Dropping_Rate

The Total Radio Link Dropping Rate is the overall RL dropping rate due to radio link failures.

Calculation

```
vsum (RlFailSync, RlFailNotSync, 0) * 100.0 / vsum
(SHO_AttRLAddIubUTRANSide, SHO_AttRLSetupIubUTRANSide, -1.0 *
SHO_FailRLAddIubUTRANSide_sum, -1.0 * SHO_FailRLSetupIubUTRANSide_sum)
```

Total_Radio_Link_Establishment_Success_Rate_on_Iub

The Total Radio Link Establishment Success Rate on Iub is the ratio between the completed Radio Link setup attempts due call setup request plus the successful radio link addition attempts against the setup attempts due to call setup attempt plus the addition attempts aggregated over all service types on the Iub.

Calculation

```
vsum (SHO_AttRLSetupIubUTRANSide, SHO_AttRLAddIubUTRANSide, -1.0 *
SHO_FailRLSetupIubUTRANSide_sum, -1.0 * SHO_FailRLAddIubUTRANSide_sum, 0) *
100.0 / vsum (SHO_AttRLSetupIubUTRANSide, SHO_AttRLAddIubUTRANSide)
```

Total_Radio_Link_Reconfiguration_Success_Rate

The Total Radio Link Reconfiguration Success Rate is the percentage of the radio link reconfigurations attempts that have been successful during the call setup, data rate change or change to compressed mode for all traffic types.

Calculation

```
vsum (NumRLReconfigAtt, -1.0 * NumRLReconfigFail_sum, 0) * 100.0 / NumRLRe-
configAtt
```

UE_Data_Rate_Reconfiguration_Success_Rate

The 'UE Data Rate Reconfiguration Success Rate' is the percentage of UEs in Cell_DCH successfully being reconfigured to a higher or lower data rate.

Calculation

```
vsum (NumRBReconfAtt_DCH_Inc, NumRBReconfAtt_DCH_Dec, -1.0 *
NumRBReconfFail_DCH_Fail, 0) * 100.0 / vsum (NumRBReconfAtt_DCH_Inc,
NumRBReconfAtt_DCH_Dec)
```

UE_DCH_to_HSDSCH_Reconfiguration_Failure_Rate_due_to_Resource_Shortage

The 'UE DCH to HSDSCH Reconfiguration Failure Rate due to Resource Shortage' provides the percentage of failed UE DCH to HSDSCH reconfiguration attempts caused by resource shortage found by Dynamic Bearer Control Procedure (DBC).

Calculation

```
NumRBReconfFail_DCH_HSDSCH_causeDBC * 100.0 / NumRBReconfAtt_DCH_HSDSCH_sum
```

UE_DCH_to_HSDSCH_Reconfiguration_Success_Rate

The 'UE DCH to HSDSCH Reconfiguration Success Rate' provides the percentage of successfully performed UE DCH to HSDSCH reconfiguration attempts.

Calculation

```
vsum (NumRBReconfAtt_DCH_HSDSCH_sum, -1.0 * NumRBReconfFail_DCH_HSDSCH_sum,
0) * 100.0 / NumRBReconfAtt_DCH_HSDSCH_sum
```

Updated: 2009-06-23

UE_HSDSCH_to_DCH_Reconfiguration_Failure_Rate_due_to_Resource_Shortage

The 'UE HSDSCH to DCH Reconfiguration Failure Rate due to Resource Shortage' provides the percentage of failed UE HSDSCH to DCH reconfiguration attempts caused by resource shortage found by Dynamic Bearer Control Procedure (DBC).

Calculation

```
NumRBReconfFail_HSDSCH_DCH_causeDBC * 100.0 / NumRBReconfAtt_HSDSCH_DCH_sum
```

UE_HSDSCH_to_DCH_Reconfiguration_Success_Rate

The 'UE HSDSCH to DCH Reconfiguration Success Rate' provides the percentage of successfully performed UE HSDSCH to DCH reconfiguration attempts.

Calculation

```
vsum (NumRBReconfAtt_HSDSCH_DCH_sum, -1.0 * NumRBReconfFail_HSDSCH_DCH_sum,
0) * 100.0 / NumRBReconfAtt_HSDSCH_DCH_sum
```

UE_State_Transition_Cell_DCH_to_Cell_FACH_Success_Rate

The 'UE State Transition Cell_DCH to Cell_FACH Success Rate' is the percentage of UE successfully transitioning from Cell_DCH to Cell_FACH.

Calculation

```
vsum (NumRBReconfAtt_DCH_FACH, -1.0 * NumRBReconfFail_DCH_FACH, 0) * 100.0
/ NumRBReconfAtt_DCH_FACH
```

UE_State_Transition_Cell_DCH_to_URA_PCH_Success_Rate

The 'UE State Transition Cell_DCH to URA_PCH Success Rate' is the percentage of UE successfully transitioning from Cell_DCH to URA_PCH.

Calculation

```
vsum (NumRBReconfAtt_DCH_PCH, -1.0 * NumRBReconfFail_DCH_PCH, 0) * 100.0 /
NumRBReconfAtt_DCH_PCH
```

UE_State_Transition_Cell_FACH_to_Cell_DCH_Success_Rate

The 'UE State Transition Cell_FACH to Cell_DCH Success Rate' is the percentage of UE successfully transitioning from Cell_FACH to Cell_DCH.

Calculation

```
vsum (NumRBReconfAtt_FACH_DCH, -1.0 * NumRBReconfFail_FACH_DCH, 0) * 100.0
/ NumRBReconfAtt_FACH_DCH
```

UE_State_Transition_Cell_FACH_to_Cell_DCH_with_HS_DSCH_Success_Rate

The 'UE State Transition Cell_FACH to Cell_DCH with HS-DSCH Success Rate' is the percentage of UE successfully transitioning from Cell_FACH to Cell_DCH with HS-DSCH to be used.

Calculation

```
vsum (NumRBReconfAtt_FACH_DCH_HSDSCH, -1.0 *
NumRBReconfFail_FACH_DCH_HSDSCH, 0) * 100.0 /
NumRBReconfAtt_FACH_DCH_HSDSCH
```

UE_State_Transition_URA_PCH_to_Cell_DCH_Success_Rate

The 'UE State Transition URA_PCH to Cell_DCH Success Rate' is the percentage of UE successfully transitioning from URA_PCH to Cell_DCH.

Calculation

```
vsum (NumRBReconfAtt_PCH_DCH, -1.0 * NumRBReconfFail_PCH_DCH, 0) * 100.0 /
NumRBReconfAtt_PCH_DCH
```

UE_State_Transition_URA_PCH_to_Cell_DCH_with_HS_DSCH_Success_Rate

The 'UE State Transition URA_PCH to Cell_DCH with HS-DSCH Success Rate' is the percentage of UE successfully transitioning from URA_PCH to Cell_DCH with HS-DSCH to be used.

Calculation

```
vsum (NumRBReconfAtt_PCH_DCH_HSDSCH, -1.0 * NumRBReconfFail_PCH_DCH_HSDSCH,
0) * 100.0 / NumRBReconfAtt_PCH_DCH_HSDSCH
```

UE_State_Transition_URA_PCH_to_Cell_FACH_Success_Rate

The 'UE State Transition URA_PCH to Cell_FACH Success Rate' is the percentage of UE successfully transitioning from URA_PCH to Cell_FACH.

Calculation

```
vsum (NumRBReconfAtt_PCH_FACH, -1.0 * NumRBReconfFail_FACH_DCH, 0) * 100.0
/ NumRBReconfAtt_PCH_FACH
```

URA_Update_Request_Rate_due_to_Change_of_URA

This KPI reflects the rate of URA UPDATE request messages with cause 'Change of URA' in relation to the total number of URA updates.

Calculation

```
NumUraUpdateRequest_UraChange * 100.0 / Total_Number_of_URA_Update_Requests
```

URA_Update_Request_Rate_due_to_Periodic_URA_Update

This KPI reflects the rate of URA UPDATE request messages with cause 'Periodic URA Update' in relation to the total number of URA updates.

Calculation

```
NumUraUpdateRequest_PeriodUpdate * 100.0 /
Total_Number_of_URA_Update_Requests
```

UtranCell Peg Counts

The following is a list of peg counts for the UtranCell entity.

_3g2gOutHoFailureCsFailureRadioProc

Number of failed outgoing Handovers from 3G to 2G. Only applicable in the context of Directed Retry for WPS calls. (CsFailureRadioProc)

Data Source

RNC C-Node

Source Field

VS.3g2gOutHoFailure.CsFailureRadioProc

Source Section

FddCell

_3g2gOutHoFailurePsFailureRadioproc

Number of failed outgoing Handovers from 3G to 2G. Only applicable in the context of Directed Retry for WPS calls. (PsFailureRadioproc)

Data Source

RNC C-Node

Source Field

VS.3g2gOutHoFailure.PsFailureRadioproc

Source Section

FddCell

_3g2gOutHoFailureRelocCancel

Number of failed outgoing Handovers from 3G to 2G. Only applicable in the context of Directed Retry for WPS calls. (RelocCancel)

Data Source

RNC C-Node

Source Field

VS.3g2gOutHoFailure.RelocCancel

Source Section

FddCell

_3g2gOutHoFailureRelocComplFail

Number of failed outgoing Handovers from 3G to 2G. Only applicable in the context of Directed Retry for WPS calls. (RelocComplFail)

Data Source

RNC C-Node

Source Field

VS.3g2gOutHoFailure.RelocComplFail

Source Section

FddCell

_3g2gOutHoFailureRelocPrepOrCancel

Number of failed outgoing Handovers from 3G to 2G. Only applicable in the context of Directed Retry for WPS calls. (RelocPrepOrCancel)

Data Source

RNC C-Node

Source Field

VS.3g2gOutHoFailure.RelocPrepOrCancel

Source Section

FddCell

_3g2gOutHoFailureUnexpected

Number of failed outgoing Handovers from 3G to 2G. Only applicable in the context of Directed Retry for WPS calls. (Unexpected)

Data Source

RNC C-Node

Source Field

VS.3g2gOutHoFailure.Unexpected

Source Section

FddCell

_3gto2gHoDetectionFromFddcellNoRsrcAvailCacFailure

Number of HO detection taken from fddcell at RRM level in RNC with a reference cell for which the iRNC is serving. This is in the scope of HO 3G to 2G initiation, for CS and PS (NoRsrcAvailCacFailure)

Data Source

RNC C-Node

Source Field

VS.3gto2gHoDetectionFromFddcell.NoRsrcAvailCacFailure

Source Section

FddCell

_3gto2gHoDetectionFromFddcellRescueCs

Number of HO detection taken from fddcell at RRM level in RNC with a reference cell for which the iRNC is serving. This is in the scope of HO 3G to 2G initiation, for CS and PS (RescueCs)

Data Source

RNC C-Node

Source Field

VS.3gto2gHoDetectionFromFddcell.RescueCs

Source Section

FddCell

_3gto2gHoDetectionFromFddcellRescuePs

Number of HO detection taken from fddcell at RRM level in RNC with a reference cell for which the iRNC is serving. This is in the scope of HO 3G to 2G initiation, for CS and PS (RescuePs)

Data Source

RNC C-Node

Source Field

VS.3gto2gHoDetectionFromFddcell.RescuePs

Source Section

FddCell

_3gto2gHoDetectionFromFddcellService

Number of HO detection taken from fddcell at RRM level in RNC with a reference cell for which the iRNC is serving. This is in the scope of HO 3G to 2G initiation, for CS and PS (Service)

Data Source

RNC C-Node

Source Field

VS.3gto2gHoDetectionFromFddcell.Service

Source Section

FddCell

_3gto2gOutHoSuccessNoRsrcCs

Number of successful outgoing Handovers from 3G to 2G. (NoRsrcCs)

Data Source

RNC C-Node

Source Field

VS.3gto2gOutHoSuccess.NoRsrcCs

Source Section

FddCell

_3gto2gOutHoSuccessNoRsrcPs

Number of successful outgoing Handovers from 3G to 2G. (NoRsrcPs)

Data Source

RNC C-Node

Source Field

VS.3gto2gOutHoSuccess.NoRsrcPs

Source Section

FddCell

_3gto2gOutHoSuccessRescueCs

Number of successful outgoing Handovers from 3G to 2G. (RescueCs)

Data Source

RNC C-Node

Source Field

VS.3gto2gOutHoSuccess.RescueCs

Source Section

FddCell

_3gto2gOutHoSuccessRescuePs

Number of successful outgoing Handovers from 3G to 2G. (RescuePs)

Data Source

RNC C-Node

Source Field

VS.3gto2gOutHoSuccess.RescuePs

Source Section

FddCell

_3gto2gOutHoSuccessServiceCs

Number of successful outgoing Handovers from 3G to 2G. (ServiceCs)

Data Source

RNC C-Node

Source Field

VS.3gto2gOutHoSuccess.ServiceCs

Source Section

FddCell

_3gto2gOutHoSuccessServicePs

Number of successful outgoing Handovers from 3G to 2G. (ServicePs)

Data Source

RNC C-Node

Source Field

VS.3gto2gOutHoSuccess.ServicePs

Source Section

FddCell

AggrCellListAmbigCellInterFreq

The aggregate inter-frequency neighbor list contains an ambiguous cell. (AggrCellListAmbigCellInterFreq)

Data Source

RNC C-Node

Source Field

VS.AggrCellListAmbigCellInterFreq

Source Section

FddCell

AggrCellListAmbigCellInterRAT

The aggregate inter-RAT neighbor list contains an ambiguous cell. (AggrCellListAmbigCellInterRAT)

Data Source

RNC C-Node

Source Field

VS.AggrCellListAmbigCellInterRAT

Source Section

FddCell

AggregateCellListAmbiguousCellIntraFreq

The aggregate intra-frequency neighbour list contains an ambiguous cell. (AggregateCellListAmbiguousCellIntraFreq)

Data Source

RNC C-Node

Source Field

VS.AggregateCellListAmbiguousCellIntraFreq

Source Section

FddCell

AmrClDlRtAmrRtChgLnk10p2

Number of AMR frames by DL rate (AmrRtChgLnk10p2)

Data Source

RNC C-Node

Source Field

VS.AmrClDlRt.AmrRtChgLnk10p2

Source Section

FddCell

AmrClDlRtAmrRtChgLnk12p2

Number of AMR frames by DL rate (AmrRtChgLnk12p2)

Data Source

RNC C-Node

Source Field

VS.AmrClDlRt.AmrRtChgLnk12p2

Source Section

FddCell

AmrClDlRtAmrRtChgLnk4p75

Number of AMR frames by DL rate (AmrRtChgLnk4p75)

Data Source

RNC C-Node

Source Field

VS.AmrClDlRt.AmrRtChgLnk4p75

Source Section

FddCell

AmrClDlRtAmrRtChgLnk5p15

Number of AMR frames by DL rate (AmrRtChgLnk5p15)

Data Source

RNC C-Node

Source Field

VS.AmrClDlRt.AmrRtChgLnk5p15

Source Section

FddCell

AmrClDlRtAmrRtChgLnk5p9

Number of AMR frames by DL rate (AmrRtChgLnk5p9)

Data Source

RNC C-Node

Source Field

VS.AmrClDlRt.AmrRtChgLnk5p9

Source Section

FddCell

AmrClDlRtAmrRtChgLnk6p7

Number of AMR frames by DL rate (AmrRtChgLnk6p7)

Data Source

RNC C-Node

Source Field

VS.AmrClDlRt.AmrRtChgLnk6p7

Source Section

FddCell

AmrClDlRtAmrRtChgLnk7p4

Number of AMR frames by DL rate (AmrRtChgLnk7p4)

Data Source

RNC C-Node

Source Field

VS.AmrClDlRt.AmrRtChgLnk7p4

Source Section

FddCell

AmrClDlRtAmrRtChgLnk7p95

Number of AMR frames by DL rate (AmrRtChgLnk7p95)

Data Source

RNC C-Node

Source Field

VS.AmrClDlRt.AmrRtChgLnk7p95

Source Section

FddCell

AmrClDlRtAmrRtChgLnkSid

Number of AMR frames by DL rate (AmrRtChgLnkSid)

Data Source

RNC C-Node

Source Field

VS.AmrClDlRt.AmrRtChgLnkSid

Source Section

FddCell

AmrClUlRtAmrRtChgLnk10p2

Number of AMR frames by UL rate (AmrRtChgLnk10p2)

Data Source

RNC C-Node

Source Field

VS.AmrClUlRt.AmrRtChgLnk10p2

Source Section

FddCell

AmrClUlRtAmrRtChgLnk12p2

Number of AMR frames by UL rate (AmrRtChgLnk12p2)

Data Source

RNC C-Node

Source Field

VS.AmrClUlRt.AmrRtChgLnk12p2

Source Section

FddCell

AmrClUlRtAmrRtChgLnk4p75

Number of AMR frames by UL rate (AmrRtChgLnk4p75)

Data Source

RNC C-Node

Source Field

VS.AmrClUlRt.AmrRtChgLnk4p75

Source Section

FddCell

AmrClUlRtAmrRtChgLnk5p15

Number of AMR frames by UL rate (AmrRtChgLnk5p15)

Data Source

RNC C-Node

Source Field

VS.AmrClUlRt.AmrRtChgLnk5p15

Source Section

FddCell

AmrClUlRtAmrRtChgLnk5p9

Number of AMR frames by UL rate (AmrRtChgLnk5p9)

Data Source

RNC C-Node

Source Field

VS.AmrClUlRt.AmrRtChgLnk5p9

Source Section

FddCell

AmrClUlRtAmrRtChgLnk6p7

Number of AMR frames by UL rate (AmrRtChgLnk6p7)

Data Source

RNC C-Node

Source Field

VS.AmrClUlRt.AmrRtChgLnk6p7

Source Section

FddCell

AmrClUlRtAmrRtChgLnk7p4

Number of AMR frames by UL rate (AmrRtChgLnk7p4)

Data Source

RNC C-Node

Source Field

VS.AmrClUlRt.AmrRtChgLnk7p4

Source Section

FddCell

AmrClUlRtAmrRtChgLnk7p95

Number of AMR frames by UL rate (AmrRtChgLnk7p95)

Data Source

RNC C-Node

Source Field

VS.AmrClUlRt.AmrRtChgLnk7p95

Source Section

FddCell

AmrClUlRtAmrRtChgLnkSid

Number of AMR frames by UL rate (AmrRtChgLnkSid)

Data Source

RNC C-Node

Source Field

VS.AmrClUlRt.AmrRtChgLnkSid

Source Section

FddCell

AmrNbInitialMaxRateAMR102

Number of times an AMR-NB rate is selected as the max allowed rate at call setup time. This counter helps to provide some statistics on the initial AMR-NB max rate selected at admission time (AMR102)

Data Source

RNC C-Node

Source Field

VS.AmrNbInitialMaxRate.AMR102

Source Section

FddCell

AmrNbInitialMaxRateAMR122

Number of times an AMR-NB rate is selected as the max allowed rate at call setup time. This counter helps to provide some statistics on the initial AMR-NB max rate selected at admission time (AMR122)

Data Source

RNC C-Node

Source Field

VS.AmrNbInitialMaxRate.AMR122

Source Section

FddCell

AmrNbInitialMaxRateAMR475

Number of times an AMR-NB rate is selected as the max allowed rate at call setup time. This counter helps to provide some statistics on the initial AMR-NB max rate selected at admission time (AMR475)

Data Source

RNC C-Node

Source Field

VS.AmrNbInitialMaxRate.AMR475

Source Section

FddCell

AmrNbInitialMaxRateAMR515

Number of times an AMR-NB rate is selected as the max allowed rate at call setup time. This counter helps to provide some statistics on the initial AMR-NB max rate selected at admission time (AMR515)

Data Source

RNC C-Node

Source Field

VS.AmrNbInitialMaxRate.AMR515

Source Section

FddCell

AmrNbInitialMaxRateAMR59

Number of times an AMR-NB rate is selected as the max allowed rate at call setup time. This counter helps to provide some statistics on the initial AMR-NB max rate selected at admission time (AMR59)

Data Source

RNC C-Node

Source Field

VS.AmrNbInitialMaxRate.AMR59

Source Section

FddCell

AmrNbInitialMaxRateAMR67

Number of times an AMR-NB rate is selected as the max allowed rate at call setup time. This counter helps to provide some statistics on the initial AMR-NB max rate selected at admission time (AMR67)

Data Source

RNC C-Node

Source Field

VS.AmrNbInitialMaxRate.AMR67

Source Section

FddCell

AmrNbInitialMaxRateAMR74

Number of times an AMR-NB rate is selected as the max allowed rate at call setup time. This counter helps to provide some statistics on the initial AMR-NB max rate selected at admission time (AMR74)

Data Source

RNC C-Node

Source Field

VS.AmrNbInitialMaxRate.AMR74

Source Section

FddCell

AmrNbInitialMaxRateAMR795

Number of times an AMR-NB rate is selected as the max allowed rate at call setup time. This counter helps to provide some statistics on the initial AMR-NB max rate selected at admission time (AMR795)

Data Source

RNC C-Node

Source Field

VS.AmrNbInitialMaxRate.AMR795

Source Section

FddCell

AmrRateReconfig5p9Att

Number of voice RB Reconfiguration attempts from AMR5.9 to AMR12.2 due to PS RAB addition. (Att)

Data Source

RNC C-Node

Source Field

VS.AmrRateReconfig5p9.Att

Source Section

FddCell

AmrRateReconfig5p9Succ

Number of successful voice RB Reconfigurations from AMR5.9 to AMR12.2 due to PS RAB addition (Succ)

Data Source

RNC C-Node

Source Field

VS.AmrRateReconfig5p9.Succ

Source Section

FddCell

AttServCellChangeEDCH

Attempted Serving E-DCH Cell Changes

Data Source

RNC

Source Field

VS.AttServCellChangeEDCH

Source Section

UtranCell

AttServCellChangeHSDSCH

Attempted Serving HS-DSCH Cell Changes

Data Source

RNC

Source Field

VS.AttServCellChangeHSDSCH

Source Section

PMs in support of HS-DSCH Cell Change

AvgMbmsPtmRbEstPerReqMbmsRabTypeBgnd64Avg

Average number of MBMS PTM RB established per MBMS RAB Type, counted per cell. (Avg)

Data Source

RNC C-Node

Source Field

VS.AvgMbmsPtmRbEstPerReqMbmsRabType.Bgnd64.Avg

Source Section

FddCell

AvgMbmsPtmRbEstPerReqMbmsRabTypeBgnd64Cum

Average number of MBMS PTM RB established per MBMS RAB Type, counted per cell. (Cum)

Data Source

RNC C-Node

Source Field

VS.AvgMbmsPtmRbEstPerReqMbmsRabType.Bgnd64.Cum

Source Section

FddCell

AvgMbmsPtmRbEstPerReqMbmsRabTypeBgnd64Max

Average number of MBMS PTM RB established per MBMS RAB Type, counted per cell. (Max)

Data Source

RNC C-Node

Source Field

VS.AvgMbmsPtmRbEstPerReqMbmsRabType.Bgnd64.Max

Source Section

FddCell

AvgMbmsPtmRbEstPerReqMbmsRabTypeBgnd64Min

Average number of MBMS PTM RB established per MBMS RAB Type, counted per cell. (Min)

Data Source

RNC C-Node

Source Field

VS.AvgMbmsPtmRbEstPerReqMbmsRabType.Bgnd64.Min

Source Section

FddCell

AvgMbmsPtmRbEstPerReqMbmsRabTypeBgnd64NbEvt

Average number of MBMS PTM RB established per MBMS RAB Type, counted per cell. (NbEvt)

Data Source

RNC C-Node

Source Field

VS.AvgMbmsPtmRbEstPerReqMbmsRabType.Bgnd64.NbEvt

Source Section

FddCell

AvgMbmsPtmRbEstPerReqMbmsRabTypeStr128Avg

Average number of MBMS PTM RB established per MBMS RAB Type, counted per cell. (Avg)

Data Source

RNC C-Node

Source Field

VS.AvgMbmsPtmRbEstPerReqMbmsRabType.Str128.Avg

Source Section

FddCell

AvgMbmsPtmRbEstPerReqMbmsRabTypeStr128Cum

Average number of MBMS PTM RB established per MBMS RAB Type, counted per cell. (Cum)

Data Source

RNC C-Node

Source Field

VS.AvgMbmsPtmRbEstPerReqMbmsRabType.Str128.Cum

Source Section

FddCell

AvgMbmsPtmRbEstPerReqMbmsRabTypeStr128Max

Average number of MBMS PTM RB established per MBMS RAB Type, counted per cell. (Max)

Data Source

RNC C-Node

Source Field

VS.AvgMbmsPtmRbEstPerReqMbmsRabType.Str128.Max

Source Section

FddCell

AvgMbmsPtmRbEstPerReqMbmsRabTypeStr128Min

Average number of MBMS PTM RB established per MBMS RAB Type, counted per cell. (Min)

Data Source

RNC C-Node

Source Field

VS.AvgMbmsPtmRbEstPerReqMbmsRabType.Str128.Min

Source Section

FddCell

AvgMbmsPtmRbEstPerReqMbmsRabTypeStr128NbEvt

Average number of MBMS PTM RB established per MBMS RAB Type, counted per cell. (NbEvt)

Data Source

RNC C-Node

Source Field

VS.AvgMbmsPtmRbEstPerReqMbmsRabType.Str128.NbEvt

Source Section

FddCell

AvgMbmsPtmRbEstPerReqMbmsRabTypeStr256Avg

Average number of MBMS PTM RB established per MBMS RAB Type, counted per cell. (Avg)

Data Source

RNC C-Node

Source Field

VS.AvgMbmsPtmRbEstPerReqMbmsRabType.Str256.Avg

Source Section

FddCell

AvgMbmsPtmRbEstPerReqMbmsRabTypeStr256Cum

Average number of MBMS PTM RB established per MBMS RAB Type, counted per cell. (Cum)

Data Source

RNC C-Node

Source Field

VS.AvgMbmsPtmRbEstPerReqMbmsRabType.Str256.Cum

Source Section

FddCell

AvgMbmsPtmRbEstPerReqMbmsRabTypeStr256Max

Average number of MBMS PTM RB established per MBMS RAB Type, counted per cell. (Max)

Data Source

RNC C-Node

Source Field

VS.AvgMbmsPtmRbEstPerReqMbmsRabType.Str256.Max

Source Section

FddCell

AvgMbmsPtmRbEstPerReqMbmsRabTypeStr256Min

Average number of MBMS PTM RB established per MBMS RAB Type, counted per cell. (Min)

Data Source

RNC C-Node

Source Field

VS.AvgMbmsPtmRbEstPerReqMbmsRabType.Str256.Min

Source Section

FddCell

AvgMbmsPtmRbEstPerReqMbmsRabTypeStr256NbEvt

Average number of MBMS PTM RB established per MBMS RAB Type, counted per cell. (NbEvt)

Data Source

RNC C-Node

Source Field

VS.AvgMbmsPtmRbEstPerReqMbmsRabType.Str256.NbEvt

Source Section

FddCell

AvgTxPowerAvg

Average of Tx Power measurements received from that cell (Avg)

Data Source

RNC C-Node

Source Field

VS.AvgTxPower.Avg

Source Section

FddCell

AvgTxPowerCum

Average of Tx Power measurements received from that cell (Cum)

Data Source

RNC C-Node

Source Field

VS.AvgTxPower.Cum

Source Section

FddCell

AvgTxPowerMax

Average of Tx Power measurements received from that cell (Max)

Data Source

RNC C-Node

Source Field

VS.AvgTxPower.Max

Source Section

FddCell

AvgTxPowerMin

Average of Tx Power measurements received from that cell (Min)

Data Source

RNC C-Node

Source Field

VS.AvgTxPower.Min

Source Section

FddCell

AvgTxPowerNbEvt

Average of Tx Power measurements received from that cell (NbEvt)

Data Source

RNC C-Node

Source Field

VS.AvgTxPower.NbEvt

Source Section

FddCell

bchPower

The power of the broadcast channel in the cell (Ref. 3GPP TS 25.433).

Data Source

OMC-U Bulk CM

Source Field

un:bchPower

Source Section

UtranCell

BmcCtchTrafVol

CTCH traffic volume. Count the number of CTCH blocks that are used. (BmcCtchTrafVol)

Data Source

RNC C-Node

Source Field

VS.BmcCtchTrafVol

Source Section

FddCell

CallAnswMulMoCsAnswer

Number of UL_DT (CONNECT ACK) or DL_DT (CP ACK) messages received related to the Multi-RAB Mobile Originating calls in CS core network domain. (Answer)

Data Source

RNC C-Node

Source Field

VS.CallAnswMulMoCs.Answer

Source Section

FddCell

CallAnswMulMoPsAnswer

Number of DL_DT (ACTIVATE PDP CONTEXT ACCEPT or CP ACK) messages received related to the Multi-RAB Mobile Originating calls in PS core network domain. (Answer)

Data Source

RNC C-Node

Source Field

VS.CallAnswMulMoPs.Answer

Source Section

FddCell

CallAnswMulMoPsHSDPAAnswer

Number of DL_DT (ACTIVATE PDP CONTEXT ACCEPT or CP ACK) messages received related to the Multi-RAB Mobile Originating calls in PS core network domain. (HSDPAAnswer)

Data Source

RNC C-Node

Source Field

VS.CallAnswMulMoPs.HSDPAAnswer

Source Section

FddCell

CallAnswMulMoPsHSDPAPresv

Number of DL_DT (ACTIVATE PDP CONTEXT ACCEPT or CP ACK) messages received related to the Multi-RAB Mobile Originating calls in PS core network domain. (HSDPAPresv)

Data Source

RNC C-Node

Source Field

VS.CallAnswMulMoPs.HSDPAPresv

Source Section

FddCell

CallAnswMulMoPsPresv

Number of DL_DT (ACTIVATE PDP CONTEXT ACCEPT or CP ACK) messages received related to the Multi-RAB Mobile Originating calls in PS core network domain. (Presv)

Data Source

RNC C-Node

Source Field

VS.CallAnswMulMoPs.Presv

Source Section

FddCell

CallAnswMulMtCsAnswer

Number of DL_DT (CONNECT ACK) or UL_DT (CP ACK) messages received related to the Multi-RAB Mobile Terminating calls in CS core network domain. (Answer)

Data Source

RNC C-Node

Source Field

VS.CallAnswMulMtCs.Answer

Source Section

FddCell

CallAnswMulMtPsAnswer

Number of DL_DT (ACTIVATE PDP CONTEXT ACCEPT) messages received related to the Multi-RAB Mobile Terminating calls in PS core network domain. (Answer)

Data Source

RNC C-Node

Source Field

VS.CallAnswMulMtPs.Answer

Source Section

FddCell

CallAnswMulMtPsHSDPAAnswer

Number of DL_DT (ACTIVATE PDP CONTEXT ACCEPT) messages received related to the Multi-RAB Mobile Terminating calls in PS core network domain. (HSDPAAnswer)

Data Source

RNC C-Node

Source Field

VS.CallAnswMulMtPs.HSDPAAnswer

Source Section

FddCell

CallAnswMulMtPsHSDPAPresv

Number of DL_DT (ACTIVATE PDP CONTEXT ACCEPT) messages received related to the Multi-RAB Mobile Terminating calls in PS core network domain. (HSDPAPresv)

Data Source

RNC C-Node

Source Field

VS.CallAnswMulMtPs.HSDPAPresv

Source Section

FddCell

CallAnswMulMtPsPresv

Number of DL_DT (ACTIVATE PDP CONTEXT ACCEPT) messages received related to the Multi-RAB Mobile Terminating calls in PS core network domain. (Presv)

Data Source

RNC C-Node

Source Field

VS.CallAnswMulMtPs.Presv

Source Section

FddCell

CallAnswNorMoCsConvCirEtc

Number of UL_DT (CONNECT ACK), DL_DT (CP ACK) messages received related to the normal Mobile Originating calls in CS core network domain. (ConvCirEtc)

Data Source

RNC C-Node

Source Field

VS.CallAnswNorMoCs.ConvCirEtc

Source Section

FddCell

CallAnswNorMoCsConvVce

Number of UL_DT (CONNECT ACK), DL_DT (CP ACK) messages received related to the normal Mobile Originating calls in CS core network domain. (ConvVce)

Data Source

RNC C-Node

Source Field

VS.CallAnswNorMoCs.ConvVce

Source Section

FddCell

CallAnswNorMoCsEmr

Number of UL_DT (CONNECT ACK), DL_DT (CP ACK) messages received related to the normal Mobile Originating calls in CS core network domain. (Emr)

Data Source

RNC C-Node

Source Field

VS.CallAnswNorMoCs.Emr

Source Section

FddCell

CallAnswNorMoCsSMS

Number of UL_DT (CONNECT ACK), DL_DT (CP ACK) messages received related to the normal Mobile Originating calls in CS core network domain. (SMS)

Data Source

RNC C-Node

Source Field

VS.CallAnswNorMoCs.SMS

Source Section

FddCell

CallAnswNorMoCsSuppl

Number of UL_DT (CONNECT ACK), DL_DT (CP ACK) messages received related to the normal Mobile Originating calls in CS core network domain. (Suppl)

Data Source

RNC C-Node

Source Field

VS.CallAnswNorMoCs.Suppl

Source Section

FddCell

CallAnswNorMoPsBgrd

Number of DL_DT (ACTIVATE PDP CONTEXT ACCEPT or CP ACK) messages received related to the normal Mobile Originating calls in PS core network domain. (Bgrd)

Data Source

RNC C-Node

Source Field

VS.CallAnswNorMoPs.Bgrd

Source Section

FddCell

CallAnswNorMoPsConv

Number of DL_DT (ACTIVATE PDP CONTEXT ACCEPT or CP ACK) messages received related to the normal Mobile Originating calls in PS core network domain. (Conv)

Data Source

RNC C-Node

Source Field

VS.CallAnswNorMoPs.Conv

Source Section

FddCell

CallAnswNorMoPsEmr

Number of DL_DT (ACTIVATE PDP CONTEXT ACCEPT or CP ACK) messages received related to the normal Mobile Originating calls in PS core network domain. (Emr)

Data Source

RNC C-Node

Source Field

VS.CallAnswNorMoPs.Emr

Source Section

FddCell

CallAnswNorMoPsHSDPABgrd

Number of DL_DT (ACTIVATE PDP CONTEXT ACCEPT or CP ACK) messages received related to the normal Mobile Originating calls in PS core network domain. (HSDPABgrd)

Data Source

RNC C-Node

Source Field

VS.CallAnswNorMoPs.HSDPABgrd

Source Section

FddCell

CallAnswNorMoPsHSDPAConv

Number of DL_DT (ACTIVATE PDP CONTEXT ACCEPT or CP ACK) messages received related to the normal Mobile Originating calls in PS core network domain. (HSDPAConv)

Data Source

RNC C-Node

Source Field

VS.CallAnswNorMoPs.HSDPAConv

Source Section

FddCell

CallAnswNorMoPsHSDPAEmr

Number of DL_DT (ACTIVATE PDP CONTEXT ACCEPT or CP ACK) messages received related to the normal Mobile Originating calls in PS core network domain. (HSDPAEmr)

Data Source

RNC C-Node

Source Field

VS.CallAnswNorMoPs.HSDPAEmr

Source Section

FddCell

CallAnswNorMoPsHSDPAIntact

Number of DL_DT (ACTIVATE PDP CONTEXT ACCEPT or CP ACK) messages received related to the normal Mobile Originating calls in PS core network domain. (HSDPAIntact)

Data Source

RNC C-Node

Source Field

VS.CallAnswNorMoPs.HSDPAIntact

Source Section

FddCell

CallAnswNorMoPsHSDPAPresv

Number of DL_DT (ACTIVATE PDP CONTEXT ACCEPT or CP ACK) messages received related to the normal Mobile Originating calls in PS core network domain. (HSDPAPresv)

Data Source

RNC C-Node

Source Field

VS.CallAnswNorMoPs.HSDPAPresv

Source Section

FddCell

CallAnswNorMoPsHSDPAStrm

Number of DL_DT (ACTIVATE PDP CONTEXT ACCEPT or CP ACK) messages received related to the normal Mobile Originating calls in PS core network domain. (HSDPAStrm)

Data Source

RNC C-Node

Source Field

VS.CallAnswNorMoPs.HSDPAStrm

Source Section

FddCell

CallAnswNorMoPsHSDPASubs

Number of DL_DT (ACTIVATE PDP CONTEXT ACCEPT or CP ACK) messages received related to the normal Mobile Originating calls in PS core network domain. (HSDPASubs)

Data Source

RNC C-Node

Source Field

VS.CallAnswNorMoPs.HSDPASubs

Source Section

FddCell

CallAnswNorMoPsIntact

Number of DL_DT (ACTIVATE PDP CONTEXT ACCEPT or CP ACK) messages received related to the normal Mobile Originating calls in PS core network domain. (Intact)

Data Source

RNC C-Node

Source Field

VS.CallAnswNorMoPs.Intact

Source Section

FddCell

CallAnswNorMoPsPresv

Number of DL_DT (ACTIVATE PDP CONTEXT ACCEPT or CP ACK) messages received related to the normal Mobile Originating calls in PS core network domain. (Presv)

Data Source

RNC C-Node

Source Field

VS.CallAnswNorMoPs.Presv

Source Section

FddCell

CallAnswNorMoPsSMS

Number of DL_DT (ACTIVATE PDP CONTEXT ACCEPT or CP ACK) messages received related to the normal Mobile Originating calls in PS core network domain. (SMS)

Data Source

RNC C-Node

Source Field

VS.CallAnswNorMoPs.SMS

Source Section

FddCell

CallAnswNorMoPsStrm

Number of DL_DT (ACTIVATE PDP CONTEXT ACCEPT or CP ACK) messages received related to the normal Mobile Originating calls in PS core network domain. (Strm)

Data Source

RNC C-Node

Source Field

VS.CallAnswNorMoPs.Strm

Source Section

FddCell

CallAnswNorMoPsSubs

Number of DL_DT (ACTIVATE PDP CONTEXT ACCEPT or CP ACK) messages received related to the normal Mobile Originating calls in PS core network domain. (Subs)

Data Source

RNC C-Node

Source Field

VS.CallAnswNorMoPs.Subs

Source Section

FddCell

CallAnswNorMtCsConvCirEtc

Number of DL_DT (CONNECT ACK), UL_DT (CP ACK) messages received related to the normal Mobile Terminating calls in CS core network domain. (ConvCirEtc)

Data Source

RNC C-Node

Source Field

VS.CallAnswNorMtCs.ConvCirEtc

Source Section

FddCell

CallAnswNorMtCsConvVce

Number of DL_DT (CONNECT ACK), UL_DT (CP ACK) messages received related to the normal Mobile Terminating calls in CS core network domain. (ConvVce)

Data Source

RNC C-Node

Source Field

VS.CallAnswNorMtCs.ConvVce

Source Section

FddCell

CallAnswNorMtCsSMS

Number of DL_DT (CONNECT ACK), UL_DT (CP ACK) messages received related to the normal Mobile Terminating calls in CS core network domain. (SMS)

Data Source

RNC C-Node

Source Field

VS.CallAnswNorMtCs.SMS

Source Section

FddCell

CallAnswNorMtCsSuppl

Number of DL_DT (CONNECT ACK), UL_DT (CP ACK) messages received related to the normal Mobile Terminating calls in CS core network domain. (Suppl)

Data Source

RNC C-Node

Source Field

VS.CallAnswNorMtCs.Suppl

Source Section

FddCell

CallAnswNorMtPsBgrd

Number of DL_DT (ACTIVATE PDP CONTEXT ACCEPT) or UL_DT (CP ACK) messages received related to the normal Mobile Terminating calls in PS core network domain. (Bgrd)

Data Source

RNC C-Node

Source Field

VS.CallAnswNorMtPs.Bgrd

Source Section

FddCell

CallAnswNorMtPsConv

Number of DL_DT (ACTIVATE PDP CONTEXT ACCEPT) or UL_DT (CP ACK) messages received related to the normal Mobile Terminating calls in PS core network domain. (Conv)

Data Source

RNC C-Node

Source Field

VS.CallAnswNorMtPs.Conv

Source Section

FddCell

CallAnswNorMtPsHSDPABgrd

Number of DL_DT (ACTIVATE PDP CONTEXT ACCEPT) or UL_DT (CP ACK) messages received related to the normal Mobile Terminating calls in PS core network domain. (HSDPABgrd)

Data Source

RNC C-Node

Source Field

VS.CallAnswNorMtPs.HSDPABgrd

Source Section

FddCell

CallAnswNorMtPsHSDPAConv

Number of DL_DT (ACTIVATE PDP CONTEXT ACCEPT) or UL_DT (CP ACK) messages received related to the normal Mobile Terminating calls in PS core network domain. (HSDPAConv)

Data Source

RNC C-Node

Source Field

VS.CallAnswNorMtPs.HSDPAConv

Source Section

FddCell

CallAnswNorMtPsHSDPAIntact

Number of DL_DT (ACTIVATE PDP CONTEXT ACCEPT) or UL_DT (CP ACK) messages received related to the normal Mobile Terminating calls in PS core network domain. (HSDPAIntact)

Data Source

RNC C-Node

Source Field

VS.CallAnswNorMtPs.HSDPAIntact

Source Section

FddCell

CallAnswNorMtPsHSDPAPresv

Number of DL_DT (ACTIVATE PDP CONTEXT ACCEPT) or UL_DT (CP ACK) messages received related to the normal Mobile Terminating calls in PS core network domain. (HSDPAPresv)

Data Source

RNC C-Node

Source Field

VS.CallAnswNorMtPs.HSDPAPresv

Source Section

FddCell

CallAnswNorMtPsHSDPAStrm

Number of DL_DT (ACTIVATE PDP CONTEXT ACCEPT) or UL_DT (CP ACK) messages received related to the normal Mobile Terminating calls in PS core network domain. (HSDPAStrm)

Data Source

RNC C-Node

Source Field

VS.CallAnswNorMtPs.HSDPAStrm

Source Section

FddCell

CallAnswNorMtPsIntact

Number of DL_DT (ACTIVATE PDP CONTEXT ACCEPT) or UL_DT (CP ACK) messages received related to the normal Mobile Terminating calls in PS core network domain. (Intact)

Data Source

RNC C-Node

Source Field

VS.CallAnswNorMtPs.Intact

Source Section

FddCell

CallAnswNorMtPsPresv

Number of DL_DT (ACTIVATE PDP CONTEXT ACCEPT) or UL_DT (CP ACK) messages received related to the normal Mobile Terminating calls in PS core network domain. (Presv)

Data Source

RNC C-Node

Source Field

VS.CallAnswNorMtPs.Presv

Source Section

FddCell

CallAnswNorMtPsSMS

Number of DL_DT (ACTIVATE PDP CONTEXT ACCEPT) or UL_DT (CP ACK) messages received related to the normal Mobile Terminating calls in PS core network domain. (SMS)

Data Source

RNC C-Node

Source Field

VS.CallAnswNorMtPs.SMS

Source Section

FddCell

CallAnswNorMtPsStrm

Number of DL_DT (ACTIVATE PDP CONTEXT ACCEPT) or UL_DT (CP ACK) messages received related to the normal Mobile Terminating calls in PS core network domain. (Strm)

Data Source

RNC C-Node

Source Field

VS.CallAnswNorMtPs.Strm

Source Section

FddCell

CallAttMulMoCsAtt

Number of INITIAL DIRECT TRANSFER messages received related to the Multi-RAB Mobile Originating calls in CS core network domain. (Att)

Data Source

RNC C-Node

Source Field

VS.CallAttMulMoCs.Att

Source Section

FddCell

CallAttMulMoPsAtt

Number of INITIAL DIRECT TRANSFER messages received related to the Multi-RAB Mobile Originating calls in PS core network domain.(*) (Att)

Data Source

RNC C-Node

Source Field

VS.CallAttMulMoPs.Att

Source Section

FddCell

CallAttMulMoPsPresv

Number of INITIAL DIRECT TRANSFER messages received related to the Multi-RAB Mobile Originating calls in PS core network domain.(*) (Presv)

Data Source

RNC C-Node

Source Field

VS.CallAttMulMoPs.Presv

Source Section

FddCell

CallAttMulMtCsAtt

Number of INITIAL DIRECT TRANSFER messages received related to the Multi-RAB Mobile Terminating calls in CS core network domain. (Att)

Data Source

RNC C-Node

Source Field

VS.CallAttMulMtCs.Att

Source Section

FddCell

CallAttMulMtPsAtt

Number of INITIAL DIRECT TRANSFER messages received related to the Multi-RAB Mobile Terminating calls in PS core network domain.(*) (Att)

Data Source

RNC C-Node

Source Field

VS.CallAttMulMtPs.Att

Source Section

FddCell

CallAttMulMtPsPresv

Number of INITIAL DIRECT TRANSFER messages received related to the Multi-RAB Mobile Terminating calls in PS core network domain.(*) (Presv)

Data Source

RNC C-Node

Source Field

VS.CallAttMulMtPs.Presv

Source Section

FddCell

CallAttNorMoCsConv

Number of INITIAL DIRECT TRANSFER messages received related to the Normal Mobile Originating calls in CS core network domain. (Conv)

Data Source

RNC C-Node

Source Field

VS.CallAttNorMoCs.Conv

Source Section

FddCell

CallAttNorMoCsEmr

Number of INITIAL DIRECT TRANSFER messages received related to the Normal Mobile Originating calls in CS core network domain. (Emr)

Data Source

RNC C-Node

Source Field

VS.CallAttNorMoCs.Emr

Source Section

FddCell

CallAttNorMoCsSMS

Number of INITIAL DIRECT TRANSFER messages received related to the Normal Mobile Originating calls in CS core network domain. (SMS)

Data Source

RNC C-Node

Source Field

VS.CallAttNorMoCs.SMS

Source Section

FddCell

CallAttNorMoCsSuppl

Number of INITIAL DIRECT TRANSFER messages received related to the Normal Mobile Originating calls in CS core network domain. (Suppl)

Data Source

RNC C-Node

Source Field

VS.CallAttNorMoCs.Suppl

Source Section

FddCell

CallAttNorMoPsBgrd

Number of INITIAL DIRECT TRANSFER messages received related to the Normal Mobile Originating calls in PS core network domain (Bgrd)

Data Source

RNC C-Node

Source Field

VS.CallAttNorMoPs.Bgrd

Source Section

FddCell

CallAttNorMoPsConv

Number of INITIAL DIRECT TRANSFER messages received related to the Normal Mobile Originating calls in PS core network domain (Conv)

Data Source

RNC C-Node

Source Field

VS.CallAttNorMoPs.Conv

Source Section

FddCell

CallAttNorMoPsEmr

Number of INITIAL DIRECT TRANSFER messages received related to the Normal Mobile Originating calls in PS core network domain (Emr)

Data Source

RNC C-Node

Source Field

VS.CallAttNorMoPs.Emr

Source Section

FddCell

CallAttNorMoPsIntact

Number of INITIAL DIRECT TRANSFER messages received related to the Normal Mobile Originating calls in PS core network domain (Intact)

Data Source

RNC C-Node

Source Field

VS.CallAttNorMoPs.Intact

Source Section

FddCell

CallAttNorMoPsPresv

Number of INITIAL DIRECT TRANSFER messages received related to the Normal Mobile Originating calls in PS core network domain (Presv)

Data Source

RNC C-Node

Source Field

VS.CallAttNorMoPs.Presv

Source Section

FddCell

CallAttNorMoPsSMS

Number of INITIAL DIRECT TRANSFER messages received related to the Normal Mobile Originating calls in PS core network domain (SMS)

Data Source

RNC C-Node

Source Field

VS.CallAttNorMoPs.SMS

Source Section

FddCell

CallAttNorMoPsStrm

Number of INITIAL DIRECT TRANSFER messages received related to the Normal Mobile Originating calls in PS core network domain (Strm)

Data Source

RNC C-Node

Source Field

VS.CallAttNorMoPs.Strm

Source Section

FddCell

CallAttNorMoPsSubs

Number of INITIAL DIRECT TRANSFER messages received related to the Normal Mobile Originating calls in PS core network domain (Subs)

Data Source

RNC C-Node

Source Field

VS.CallAttNorMoPs.Subs

Source Section

FddCell

CallAttNorMtCsConv

Number of INITIAL DIRECT TRANSFER messages received related to the normal Mobile Terminating calls in CS core network domain. (Conv)

Data Source

RNC C-Node

Source Field

VS.CallAttNorMtCs.Conv

Source Section

FddCell

CallAttNorMtCsSMS

Number of INITIAL DIRECT TRANSFER messages received related to the normal Mobile Terminating calls in CS core network domain. (SMS)

Data Source

RNC C-Node

Source Field

VS.CallAttNorMtCs.SMS

Source Section

FddCell

CallAttNorMtCsSuppl

Number of INITIAL DIRECT TRANSFER messages received related to the normal Mobile Terminating calls in CS core network domain. (Suppl)

Data Source

RNC C-Node

Source Field

VS.CallAttNorMtCs.Suppl

Source Section

FddCell

CallAttNorMtPsBgrd

Number of INITIAL DIRECT TRANSFER messages received related to the normal Mobile Terminating calls in PS core network domain. (Bgrd)

Data Source

RNC C-Node

Source Field

VS.CallAttNorMtPs.Bgrd

Source Section

FddCell

CallAttNorMtPsConv

Number of INITIAL DIRECT TRANSFER messages received related to the normal Mobile Terminating calls in PS core network domain. (Conv)

Data Source

RNC C-Node

Source Field

VS.CallAttNorMtPs.Conv

Source Section

FddCell

CallAttNorMtPsIntact

Number of INITIAL DIRECT TRANSFER messages received related to the normal Mobile Terminating calls in PS core network domain. (Intact)

Data Source

RNC C-Node

Source Field

VS.CallAttNorMtPs.Intact

Source Section

FddCell

CallAttNorMtPsPresv

Number of INITIAL DIRECT TRANSFER messages received related to the normal Mobile Terminating calls in PS core network domain. (Presv)

Data Source

RNC C-Node

Source Field

VS.CallAttNorMtPs.Presv

Source Section

FddCell

CallAttNorMtPsSMS

Number of INITIAL DIRECT TRANSFER messages received related to the normal Mobile Terminating calls in PS core network domain. (SMS)

Data Source

RNC C-Node

Source Field

VS.CallAttNorMtPs.SMS

Source Section

FddCell

CallAttNorMtPsStrm

Number of INITIAL DIRECT TRANSFER messages received related to the normal Mobile Terminating calls in PS core network domain. (Strm)

Data Source

RNC C-Node

Source Field

VS.CallAttNorMtPs.Strm

Source Section

FddCell

CallEstablishmentDurationBackgroundAvg

Duration of the successful call establishment (Avg)

Data Source

RNC C-Node

Source Field

VS.CallEstablishmentDuration.Background.Avg

Source Section

FddCell

CallEstablishmentDurationBackgroundCum

Duration of the successful call establishment (Cum)

Data Source

RNC C-Node

Source Field

VS.CallEstablishmentDuration.Background.Cum

Source Section

FddCell

CallEstablishmentDurationBackgroundMax

Duration of the successful call establishment (Max)

Data Source

RNC C-Node

Source Field

VS.CallEstablishmentDuration.Background.Max

Source Section

FddCell

CallEstablishmentDurationBackgroundMin

Duration of the successful call establishment (Min)

Data Source

RNC C-Node

Source Field

VS.CallEstablishmentDuration.Background.Min

Source Section

FddCell

CallEstablishmentDurationBackgroundNbEvt

Duration of the successful call establishment (NbEvt)

Data Source

RNC C-Node

Source Field

VS.CallEstablishmentDuration.Background.NbEvt

Source Section

FddCell

CallEstablishmentDurationConversationalAvg

Duration of the successful call establishment (Avg)

Data Source

RNC C-Node

Source Field

VS.CallEstablishmentDuration.Conversational.Avg

Source Section

FddCell

CallEstablishmentDurationConversationalCum

Duration of the successful call establishment (Cum)

Data Source

RNC C-Node

Source Field

VS.CallEstablishmentDuration.Conversational.Cum

Source Section

FddCell

CallEstablishmentDurationConversationalMax

Duration of the successful call establishment (Max)

Data Source

RNC C-Node

Source Field

VS.CallEstablishmentDuration.Conversational.Max

Source Section

FddCell

CallEstablishmentDurationConversationalMin

Duration of the successful call establishment (Min)

Data Source

RNC C-Node

Source Field

VS.CallEstablishmentDuration.Conversational.Min

Source Section

FddCell

CallEstablishmentDurationConversationalNbEvt

Duration of the successful call establishment (NbEvt)

Data Source

RNC C-Node

Source Field

VS.CallEstablishmentDuration.Conversational.NbEvt

Source Section

FddCell

CallEstablishmentDurationInteractiveAvg

Duration of the successful call establishment (Avg)

Data Source

RNC C-Node

Source Field

VS.CallEstablishmentDuration.Interactive.Avg

Source Section

FddCell

CallEstablishmentDurationInteractiveCum

Duration of the successful call establishment (Cum)

Data Source

RNC C-Node

Source Field

VS.CallEstablishmentDuration.Interactive.Cum

Source Section

FddCell

CallEstablishmentDurationInteractiveMax

Duration of the successful call establishment (Max)

Data Source

RNC C-Node

Source Field

VS.CallEstablishmentDuration.Interactive.Max

Source Section

FddCell

CallEstablishmentDurationInteractiveMin

Duration of the successful call establishment (Min)

Data Source

RNC C-Node

Source Field

VS.CallEstablishmentDuration.Interactive.Min

Source Section

FddCell

CallEstablishmentDurationInteractiveNbEvt

Duration of the successful call establishment (NbEvt)

Data Source

RNC C-Node

Source Field

VS.CallEstablishmentDuration.Interactive.NbEvt

Source Section

FddCell

CallEstablishmentDurationStreamingAvg

Duration of the successful call establishment (Avg)

Data Source

RNC C-Node

Source Field

VS.CallEstablishmentDuration.Streaming.Avg

Source Section

FddCell

CallEstablishmentDurationStreamingCum

Duration of the successful call establishment (Cum)

Data Source

RNC C-Node

Source Field

VS.CallEstablishmentDuration.Streaming.Cum

Source Section

FddCell

CallEstablishmentDurationStreamingMax

Duration of the successful call establishment (Max)

Data Source

RNC C-Node

Source Field

VS.CallEstablishmentDuration.Streaming.Max

Source Section

FddCell

CallEstablishmentDurationStreamingMin

Duration of the successful call establishment (Min)

Data Source

RNC C-Node

Source Field

VS.CallEstablishmentDuration.Streaming.Min

Source Section

FddCell

CallEstablishmentDurationStreamingNbEvt

Duration of the successful call establishment (NbEvt)

Data Source

RNC C-Node

Source Field

VS.CallEstablishmentDuration.Streaming.NbEvt

Source Section

FddCell

CARRPwrDataAvg

Average power used for data calls at Cell level (used for Cell_RRM). Power control is taken into account. (Avg)

Data Source

RNC C-Node

Source Field

VS.CARRPwrData.Avg

Source Section

FddCell

CARRPwrDataCum

Average power used for data calls at Cell level (used for Cell_RRM). Power control is taken into account. (Cum)

Data Source

RNC C-Node

Source Field

VS.CARRPwrData.Cum

Source Section

FddCell

CARRPwrDataMax

Average power used for data calls at Cell level (used for Cell_RRM). Power control is taken into account. (Max)

Data Source

RNC C-Node

Source Field

VS.CARRPwrData.Max

Source Section

FddCell

CARRPwrDataMin

Average power used for data calls at Cell level (used for Cell_RRM). Power control is taken into account. (Min)

Data Source

RNC C-Node

Source Field

VS.CARRPwrData.Min

Source Section

FddCell

CARRPwrDataNbEvt

Average power used for data calls at Cell level (used for Cell_RRM). Power control is taken into account. (NbEvt)

Data Source

RNC C-Node

Source Field

VS.CARRPwrData.NbEvt

Source Section

FddCell

CARRPwrMiscellaneousAvg

Average power used for miscellaneous (used for Cell_RRM). Power control is taken into account. (Avg)

Data Source

RNC C-Node

Source Field

VS.CARRPwrMiscellaneous.Avg

Source Section

FddCell

CARRPwrMiscellaneousCum

Average power used for miscellaneous (used for Cell_RRM). Power control is taken into account. (Cum)

Data Source

RNC C-Node

Source Field

VS.CARRPwrMiscellaneous.Cum

Source Section

FddCell

CARRPwrMiscellaneousMax

Average power used for miscellaneous (used for Cell_RRM). Power control is taken into account. (Max)

Data Source

RNC C-Node

Source Field

VS.CARRPwrMiscellaneous.Max

Source Section

FddCell

CARRPwrMiscellaneousMin

Average power used for miscellaneous (used for Cell_RRM). Power control is taken into account. (Min)

Data Source

RNC C-Node

Source Field

VS.CARRPwrMiscellaneous.Min

Source Section

FddCell

CARRPwrMiscellaneousNbEvt

Average power used for miscellaneous (used for Cell_RRM). Power control is taken into account. (NbEvt)

Data Source

RNC C-Node

Source Field

VS.CARRPwrMiscellaneous.NbEvt

Source Section

FddCell

CARRPwrSignallingAvg

Average power used for signalling (used for Cell_RRM). Power control is taken into account. (Avg)

Data Source

RNC C-Node

Source Field

VS.CARRPwrSignalling.Avg

Source Section

FddCell

CARRPwrSignallingCum

Average power used for signalling (used for Cell_RRM). Power control is taken into account. (Cum)

Data Source

RNC C-Node

Source Field

VS.CARRPwrSignalling.Cum

Source Section

FddCell

CARRPwrSignallingMax

Average power used for signalling (used for Cell_RRM). Power control is taken into account. (Max)

Data Source

RNC C-Node

Source Field

VS.CARRPwrSignalling.Max

Source Section

FddCell

CARRPwrSignallingMin

Average power used for signalling (used for Cell_RRM). Power control is taken into account. (Min)

Data Source

RNC C-Node

Source Field

VS.CARRPwrSignalling.Min

Source Section

FddCell

CARRPwrSignallingNbEvt

Average power used for signalling (used for Cell_RRM). Power control is taken into account. (NbEvt)

Data Source

RNC C-Node

Source Field

VS.CARRPwrSignalling.NbEvt

Source Section

FddCell

CARRPwrSpeechAvg

Average power used for speech calls at Cell level (used for Cell_RRM). Power control is taken into account (Avg)

Data Source

RNC C-Node

Source Field

VS.CARRPwrSpeech.Avg

Source Section

FddCell

CARRPwrSpeechCum

Average power used for speech calls at Cell level (used for Cell_RRM). Power control is taken into account (Cum)

Data Source

RNC C-Node

Source Field

VS.CARRPwrSpeech.Cum

Source Section

FddCell

CARRPwrSpeechMax

Average power used for speech calls at Cell level (used for Cell_RRM). Power control is taken into account (Max)

Data Source

RNC C-Node

Source Field

VS.CARRPwrSpeech.Max

Source Section

FddCell

CARRPwrSpeechMin

Average power used for speech calls at Cell level (used for Cell_RRM). Power control is taken into account (Min)

Data Source

RNC C-Node

Source Field

VS.CARRPwrSpeech.Min

Source Section

FddCell

CARRPwrSpeechNbEvt

Average power used for speech calls at Cell level (used for Cell_RRM). Power control is taken into account (NbEvt)

Data Source

RNC C-Node

Source Field

VS.CARRPwrSpeech.NbEvt

Source Section

FddCell

CellAttWithUeCatPerCellUeCategory1

Number of call attempts, with each UE category number (#1~12), per cell (UeCategory1)

Data Source

RNC C-Node

Source Field

VS.CellAttWithUeCatPerCell.UeCategory1

Source Section

FddCell

CellAttWithUeCatPerCellUeCategory10

Number of call attempts, with each UE category number (#1~12), per cell (UeCategory10)

Data Source

RNC C-Node

Source Field

VS.CellAttWithUeCatPerCell.UeCategory10

Source Section

FddCell

CellAttWithUeCatPerCellUeCategory11

Number of call attempts, with each UE category number (#1~12), per cell (UeCategory11)

Data Source

RNC C-Node

Source Field

VS.CellAttWithUeCatPerCell.UeCategory11

Source Section

FddCell

CellAttWithUeCatPerCellUeCategory12

Number of call attempts, with each UE category number (#1~12), per cell (UeCategory12)

Data Source

RNC C-Node

Source Field

VS.CellAttWithUeCatPerCell.UeCategory12

Source Section

FddCell

CellAttWithUeCatPerCellUeCategory2

Number of call attempts, with each UE category number (#1~12), per cell (UeCategory2)

Data Source

RNC C-Node

Source Field

VS.CellAttWithUeCatPerCell.UeCategory2

Source Section

FddCell

CellAttWithUeCatPerCellUeCategory3

Number of call attempts, with each UE category number (#1~12), per cell (UeCategory3)

Data Source

RNC C-Node

Source Field

VS.CellAttWithUeCatPerCell.UeCategory3

Source Section

FddCell

CellAttWithUeCatPerCellUeCategory4

Number of call attempts, with each UE category number (#1~12), per cell (UeCategory4)

Data Source

RNC C-Node

Source Field

VS.CellAttWithUeCatPerCell.UeCategory4

Source Section

FddCell

CellAttWithUeCatPerCellUeCategory5

Number of call attempts, with each UE category number (#1~12), per cell (UeCategory5)

Data Source

RNC C-Node

Source Field

VS.CellAttWithUeCatPerCell.UeCategory5

Source Section

FddCell

CellAttWithUeCatPerCellUeCategory6

Number of call attempts, with each UE category number (#1~12), per cell (UeCategory6)

Data Source

RNC C-Node

Source Field

VS.CellAttWithUeCatPerCell.UeCategory6

Source Section

FddCell

CellAttWithUeCatPerCellUeCategory7

Number of call attempts, with each UE category number (#1~12), per cell (UeCategory7)

Data Source

RNC C-Node

Source Field

VS.CellAttWithUeCatPerCell.UeCategory7

Source Section

FddCell

CellAttWithUeCatPerCellUeCategory8

Number of call attempts, with each UE category number (#1~12), per cell (UeCategory8)

Data Source

RNC C-Node

Source Field

VS.CellAttWithUeCatPerCell.UeCategory8

Source Section

FddCell

CellAttWithUeCatPerCellUeCategory9

Number of call attempts, with each UE category number (#1~12), per cell (UeCategory9)

Data Source

RNC C-Node

Source Field

VS.CellAttWithUeCatPerCell.UeCategory9

Source Section

FddCell

ChanCodeUtil

Average utilisation of the channelization codes as a percentage

Data Source

RNC

Source Field

VS.ChanCodeUtil

Source Section

Common Control Channel

ChannelOccupRatePCH

Channel Occupancy rate for PCH

Data Source

RNC

Source Field

VS.ChannelOccupRatePCH

Source Section

Common Control Channel

ChannelOccupRateRACH

Channel Occupancy rate for RACH

Data Source

RNC

Source Field

VS.ChannelOccupRateRACH

Source Section

Common Control Channel

cId

cId is the identifier of a cell in one RNC (Ref. 3GPP TS 25.401).

Data Source

OMC-U Bulk CM

Source Field

un:cId

Source Section

UtranCell

CNInitAmrNbUlRateCtrl

Number of CN initiated RRC TFC control in AMR calls (CNInitAmrNbUlRateCtrl)

Data Source

RNC C-Node

Source Field

VS.CNInitAmrNbUlRateCtrl

Source Section

FddCell

CommonMacDownlinkCcchSdu

Number of SDUs received by the MAC layer for the CCCH of the Cell (from RLC counter: MAC_CCCH_DL_SDU_CNT) in the downlink direction (CommonMacDownlinkCcchSdu)

Data Source

RNC C-Node

Source Field

VS.CommonMacDownlinkCcchSdu

Source Section

FddCell

CommonMacDownlinkDcchOverFachSdu

Number of SDUs received by the MAC layer for a DCCH over the FACH of the Cell (from RLC counter: MAC_DCCH_OVER_FACH_DL_SDU_CNT) in the downlink direction (CommonMacDownlinkDcchOverFachSdu)

Data Source

RNC C-Node

Source Field

VS.CommonMacDownlinkDcchOverFachSdu

Source Section

FddCell

CommonMacDownlinkDtchOverFachSdu

Number of SDUs received by the MAC layer for a DTCH over the FACH of the Cell (from RLC counter: MAC_DTCH_OVER_FACH_DL_SDU_CNT) in the downlink direction (CommonMacDownlinkDtchOverFachSdu)

Data Source

RNC C-Node

Source Field

VS.CommonMacDownlinkDtchOverFachSdu

Source Section

FddCell

CommonMacDownlinkPcchSdu

Number of SDUs received by the MAC layer for the PCCH of the Cell (from RLC counter: MAC_PCCH_DL_SDU_CNT) (CommonMacDownlinkPcchSdu)

Data Source

RNC C-Node

Source Field

VS.CommonMacDownlinkPcchSdu

Source Section

FddCell

CommonMacUplinkCcchSdu

Number of SDUs received by the MAC layer for the CCCH of the Cell (from RLC counter: MAC_CCCH_UL_SDU_CNT) in the uplink direction (CommonMacUplinkCcchSdu)

Data Source

RNC C-Node

Source Field

VS.CommonMacUplinkCcchSdu

Source Section

FddCell

CommonMacUplinkDcchOverRachSdu

Number of SDUs received by the MAC layer for a DCCH over the RACH of the Cell (from RLC counter: MAC_DCCH_OVER_RACH_UL_SDU_CNT) in the uplink direction (CommonMacUplinkDcchOverRachSdu)

Data Source

RNC C-Node

Source Field

VS.CommonMacUplinkDcchOverRachSdu

Source Section

FddCell

CommonMacUplinkDtchOverRachSdu

Number of SDUs received by the MAC layer for a DTCH over the RACH of the Cell (from RLC counter: MAC_DTCH_OVER_RACH_UL_SDU_CNT) in the uplink direction (CommonMacUplinkDtchOverRachSdu)

Data Source

RNC C-Node

Source Field

VS.CommonMacUplinkDtchOverRachSdu

Source Section

FddCell

CommonRlcCcchDiscardSdu

Number of sdu discarded on CCCH or CTCH RLC for the Cell. (from Rlc counter RLC_CCCH_DIS_SDU_DL_CNT) (CommonRlcCcchDiscardSdu)

Data Source

RNC C-Node

Source Field

VS.CommonRlcCcchDiscardSdu

Source Section

FddCell

CommonRlcCcchDownlinkKbytes

Number of Kbytes of data (payload) sent on common downlink RLC CCCH or CTCH for the Cell (from RLC counter: RLC_CCCH_TOTAL_DL_CNT) (CommonRlcCcchDownlinkKbytes)

Data Source

RNC C-Node

Source Field

VS.CommonRlcCcchDownlinkKbytes

Source Section

FddCell

CommonRlcCcchDownlinkSdu

Number of sdu sent on CCCH or CTCH downlink RLC for the Cell (from Rlc counter RLC_CCCH_SDU_DL_CNT) (CommonRlcCcchDownlinkSdu)

Data Source

RNC C-Node

Source Field

VS.CommonRlcCcchDownlinkSdu

Source Section

FddCell

CommonRlcCcchPadding

Number of dummy padding Kbytes generated on CCCH or CTCH RLC for the Cell. (from Rlc counter RLC_CCCH_PAD_DL_CNT) (CommonRlcCcchPadding)

Data Source

RNC C-Node

Source Field

VS.CommonRlcCcchPadding

Source Section

FddCell

CommonUplinkTimingAdjustmentFrames

Number of uplink traffic channel sync frames on the Iub for the Cell (from counter IUBCCH_UL_TIMADJ_FRAMES_CNT) (CommonUplinkTimingAdjustmentFrames)

Data Source

RNC C-Node

Source Field

VS.CommonUplinkTimingAdjustmentFrames

Source Section

FddCell

CommonUplinkTrafficChnlSyncFrames

Number of uplink traffic channel sync frames on the Iub for the Cell (from counter IUBCCH_UL_TRCHNSYN_FRAMES_CNT) (CommonUplinkTrafficChnlSyncFrames)

Data Source

RNC C-Node

Source Field

VS.CommonUplinkTrafficChnlSyncFrames

Source Section

FddCell

CompMode_AttPrepare

Attempted Compressed Mode Preparations

Data Source

RNC

Source Field

VS.CompMode.AttPrepare

Source Section

Compressed Mode Performance Measurements

CompMode_FailPrepare

Failed Compressed Mode Preparations

Data Source

RNC

Source Field

VS.CompMode.FailPrepare

Source Section

Compressed Mode Performance Measurements

CsDropRelocImgAtt

The number of CS call released abnormally. (ImgAtt)

Data Source

RNC C-Node

Source Field

VS.CsDropReloc.ImgAtt

Source Section

FddCell

CsDropRelocVceAtt

The number of CS call released abnormally. (VceAtt)

Data Source

RNC C-Node

Source Field

VS.CsDropReloc.VceAtt

Source Section

FddCell

CsLocalRegState2FailureCnInvalSub

CS Local Registration Failure at state 2. (CnInvalSub)

Data Source

RNC C-Node

Source Field

VS.CsLocalRegState2Failure.CnInvalSub

Source Section

FddCell

CsLocalRegState2FailureNo7Fail

CS Local Registration Failure at state 2. (No7Fail)

Data Source

RNC C-Node

Source Field

VS.CsLocalRegState2Failure.No7Fail

Source Section

FddCell

CsLocalRegState2FailureRrcFail

CS Local Registration Failure at state 2. (RrcFail)

Data Source

RNC C-Node

Source Field

VS.CsLocalRegState2Failure.RrcFail

Source Section

FddCell

CsMoCallAvgHoldingTimeConvAvg

CS mobile originating call average holding time (Avg)

Data Source

RNC C-Node

Source Field

VS.CsMoCallAvgHoldingTime.Conv.Avg

Source Section

FddCell

CsMoCallAvgHoldingTimeConvCum

CS mobile originating call average holding time (Cum)

Data Source

RNC C-Node

Source Field

VS.CsMoCallAvgHoldingTime.Conv.Cum

Source Section

FddCell

CsMoCallAvgHoldingTimeConvMax

CS mobile originating call average holding time (Max)

Data Source

RNC C-Node

Source Field

VS.CsMoCallAvgHoldingTime.Conv.Max

Source Section

FddCell

CsMoCallAvgHoldingTimeConvMin

CS mobile originating call average holding time (Min)

Data Source

RNC C-Node

Source Field

VS.CsMoCallAvgHoldingTime.Conv.Min

Source Section

FddCell

CsMoCallAvgHoldingTimeConvNbEvt

CS mobile originating call average holding time (NbEvt)

Data Source

RNC C-Node

Source Field

VS.CsMoCallAvgHoldingTime.Conv.NbEvt

Source Section

FddCell

CsMoCallAvgHoldingTimeEmerAvg

CS mobile originating call average holding time (Avg)

Data Source

RNC C-Node

Source Field

VS.CsMoCallAvgHoldingTime.Emer.Avg

Source Section

FddCell

CsMoCallAvgHoldingTimeEmerCum

CS mobile originating call average holding time (Cum)

Data Source

RNC C-Node

Source Field

VS.CsMoCallAvgHoldingTime.Emer.Cum

Source Section

FddCell

CsMoCallAvgHoldingTimeEmerMax

CS mobile originating call average holding time (Max)

Data Source

RNC C-Node

Source Field

VS.CsMoCallAvgHoldingTime.Emer.Max

Source Section

FddCell

CsMoCallAvgHoldingTimeEmerMin

CS mobile originating call average holding time (Min)

Data Source

RNC C-Node

Source Field

VS.CsMoCallAvgHoldingTime.Emer.Min

Source Section

FddCell

CsMoCallAvgHoldingTimeEmerNbEvt

CS mobile originating call average holding time (NbEvt)

Data Source

RNC C-Node

Source Field

VS.CsMoCallAvgHoldingTime.Emer.NbEvt

Source Section

FddCell

CsMoRabCallAvgSetupTimeConvAvg

CS mobile originating RAB call average set up time (Avg)

Data Source

RNC C-Node

Source Field

VS.CsMoRabCallAvgSetupTime.Conv.Avg

Source Section

FddCell

CsMoRabCallAvgSetupTimeConvCum

CS mobile originating RAB call average set up time (Cum)

Data Source

RNC C-Node

Source Field

VS.CsMoRabCallAvgSetupTime.Conv.Cum

Source Section

FddCell

CsMoRabCallAvgSetupTimeConvMax

CS mobile originating RAB call average set up time (Max)

Data Source

RNC C-Node

Source Field

VS.CsMoRabCallAvgSetupTime.Conv.Max

Source Section

FddCell

CsMoRabCallAvgSetupTimeConvMin

CS mobile originating RAB call average set up time (Min)

Data Source

RNC C-Node

Source Field

VS.CsMoRabCallAvgSetupTime.Conv.Min

Source Section

FddCell

CsMoRabCallAvgSetupTimeConvNbEvt

CS mobile originating RAB call average set up time (NbEvt)

Data Source

RNC C-Node

Source Field

VS.CsMoRabCallAvgSetupTime.Conv.NbEvt

Source Section

FddCell

CsMoRabCallAvgSetupTimeEmerAvg

CS mobile originating RAB call average set up time (Avg)

Data Source

RNC C-Node

Source Field

VS.CsMoRabCallAvgSetupTime.Emer.Avg

Source Section

FddCell

CsMoRabCallAvgSetupTimeEmerCum

CS mobile originating RAB call average set up time (Cum)

Data Source

RNC C-Node

Source Field

VS.CsMoRabCallAvgSetupTime.Emer.Cum

Source Section

FddCell

CsMoRabCallAvgSetupTimeEmerMax

CS mobile originating RAB call average set up time (Max)

Data Source

RNC C-Node

Source Field

VS.CsMoRabCallAvgSetupTime.Emer.Max

Source Section

FddCell

CsMoRabCallAvgSetupTimeEmerMin

CS mobile originating RAB call average set up time (Min)

Data Source

RNC C-Node

Source Field

VS.CsMoRabCallAvgSetupTime.Emer.Min

Source Section

FddCell

CsMoRabCallAvgSetupTimeEmerNbEvt

CS mobile originating RAB call average set up time (NbEvt)

Data Source

RNC C-Node

Source Field

VS.CsMoRabCallAvgSetupTime.Emer.NbEvt

Source Section

FddCell

CsMoState2FailureCnCallBarS2

number of CS mobile originating failure at state 2. (CnCallBarS2)

Data Source

RNC C-Node

Source Field

VS.CsMoState2Failure.CnCallBarS2

Source Section

FddCell

CsMoState2FailureCnFwdCntErrS2

number of CS mobile originating failure at state 2. (CnFwdCntErrS2)

Data Source

RNC C-Node

Source Field

VS.CsMoState2Failure.CnFwdCntErrS2

Source Section

FddCell

CsMoState2FailureCnImsiDetS2

number of CS mobile originating failure at state 2. (CnImsiDetS2)

Data Source

RNC C-Node

Source Field

VS.CsMoState2Failure.CnImsiDetS2

Source Section

FddCell

CsMoState2FailureCnIncmpPrfS2

number of CS mobile originating failure at state 2. (CnIncmpPrfS2)

Data Source

RNC C-Node

Source Field

VS.CsMoState2Failure.CnIncmpPrfS2

Source Section

FddCell

CsMoState2FailureCnIncomDialS2

number of CS mobile originating failure at state 2. (CnIncomDialS2)

Data Source

RNC C-Node

Source Field

VS.CsMoState2Failure.CnIncomDialS2

Source Section

FddCell

CsMoState2FailureCnInvalSubS2

number of CS mobile originating failure at state 2. (CnInvalSubS2)

Data Source

RNC C-Node

Source Field

VS.CsMoState2Failure.CnInvalSubS2

Source Section

FddCell

CsMoState2FailureCnIsupErrS2

number of CS mobile originating failure at state 2. (CnIsupErrS2)

Data Source

RNC C-Node

Source Field

VS.CsMoState2Failure.CnIsupErrS2

Source Section

FddCell

CsMoState2FailureCnMobileErrS2

number of CS mobile originating failure at state 2. (CnMobileErrS2)

Data Source

RNC C-Node

Source Field

VS.CsMoState2Failure.CnMobileErrS2

Source Section

FddCell

CsMoState2FailureCnOrgRelCspS2

number of CS mobile originating failure at state 2. (CnOrgRelCspS2)

Data Source

RNC C-Node

Source Field

VS.CsMoState2Failure.CnOrgRelCspS2

Source Section

FddCell

CsMoState2FailureCnOrgRelMmS2

number of CS mobile originating failure at state 2. (CnOrgRelMmS2)

Data Source

RNC C-Node

Source Field

VS.CsMoState2Failure.CnOrgRelMmS2

Source Section

FddCell

CsMoState2FailureCnPagNoRspS2

number of CS mobile originating failure at state 2. (CnPagNoRspS2)

Data Source

RNC C-Node

Source Field

VS.CsMoState2Failure.CnPagNoRspS2

Source Section

FddCell

CsMoState2FailureCnSysFailS2

number of CS mobile originating failure at state 2. (CnSysFailS2)

Data Source

RNC C-Node

Source Field

VS.CsMoState2Failure.CnSysFailS2

Source Section

FddCell

CsMoState2FailureCnTerEtcS2

number of CS mobile originating failure at state 2. (CnTerEtcS2)

Data Source

RNC C-Node

Source Field

VS.CsMoState2Failure.CnTerEtcS2

Source Section

FddCell

CsMoState2FailureCnUserBusyS2

number of CS mobile originating failure at state 2. (CnUserBusyS2)

Data Source

RNC C-Node

Source Field

VS.CsMoState2Failure.CnUserBusyS2

Source Section

FddCell

CsMoState2FailureCnWrongFtnS2

number of CS mobile originating failure at state 2. (CnWrongFtnS2)

Data Source

RNC C-Node

Source Field

VS.CsMoState2Failure.CnWrongFtnS2

Source Section

FddCell

CsMoState2FailureCnWrongNoS2

number of CS mobile originating failure at state 2. (CnWrongNoS2)

Data Source

RNC C-Node

Source Field

VS.CsMoState2Failure.CnWrongNoS2

Source Section

FddCell

CsMoState3FailureCnFwdCntErrS3

number of CS mobile originating failure at state 3. (CnFwdCntErrS3)

Data Source

RNC C-Node

Source Field

VS.CsMoState3Failure.CnFwdCntErrS3

Source Section

FddCell

CsMoState3FailureCnIncmpPrfS3

number of CS mobile originating failure at state 3. (CnIncmpPrfS3)

Data Source

RNC C-Node

Source Field

VS.CsMoState3Failure.CnIncmpPrfS3

Source Section

FddCell

CsMoState3FailureCnIsupErrS3

number of CS mobile originating failure at state 3. (CnIsupErrS3)

Data Source

RNC C-Node

Source Field

VS.CsMoState3Failure.CnIsupErrS3

Source Section

FddCell

CsMoState3FailureCnMobileErrS3

number of CS mobile originating failure at state 3. (CnMobileErrS3)

Data Source

RNC C-Node

Source Field

VS.CsMoState3Failure.CnMobileErrS3

Source Section

FddCell

CsMoState3FailureCnOrgRelCspS3

number of CS mobile originating failure at state 3. (CnOrgRelCspS3)

Data Source

RNC C-Node

Source Field

VS.CsMoState3Failure.CnOrgRelCspS3

Source Section

FddCell

CsMoState3FailureCnWrongFtnS3

number of CS mobile originating failure at state 3. (CnWrongFtnS3)

Data Source

RNC C-Node

Source Field

VS.CsMoState3Failure.CnWrongFtnS3

Source Section

FddCell

CsMoState4FailureCnFwdCntErrS4

number of CS mobile originating failure at state 4. (CnFwdCntErrS4)

Data Source

RNC C-Node

Source Field

VS.CsMoState4Failure.CnFwdCntErrS4

Source Section

FddCell

CsMoState4FailureCnIsupErrS4

number of CS mobile originating failure at state 4. (CnIsupErrS4)

Data Source

RNC C-Node

Source Field

VS.CsMoState4Failure.CnIsupErrS4

Source Section

FddCell

CsMoState4FailureCnMobileErrS4

number of CS mobile originating failure at state 4. (CnMobileErrS4)

Data Source

RNC C-Node

Source Field

VS.CsMoState4Failure.CnMobileErrS4

Source Section

FddCell

CsMoState4FailureCnNoAnsS4

number of CS mobile originating failure at state 4. (CnNoAnsS4)

Data Source

RNC C-Node

Source Field

VS.CsMoState4Failure.CnNoAnsS4

Source Section

FddCell

CsMoState4FailureCnOrgRelCspS4

number of CS mobile originating failure at state 4. (CnOrgRelCspS4)

Data Source

RNC C-Node

Source Field

VS.CsMoState4Failure.CnOrgRelCspS4

Source Section

FddCell

CsMoState4FailureCnTerEtcS4

number of CS mobile originating failure at state 4. (CnTerEtcS4)

Data Source

RNC C-Node

Source Field

VS.CsMoState4Failure.CnTerEtcS4

Source Section

FddCell

CsMoState4FailureCnWrongFtnS4

number of CS mobile originating failure at state 4. (CnWrongFtnS4)

Data Source

RNC C-Node

Source Field

VS.CsMoState4Failure.CnWrongFtnS4

Source Section

FddCell

CsMtCallAvgHoldingTimeConvAvg

CS mobile terminating call average holding time (Avg)

Data Source

RNC C-Node

Source Field

VS.CsMtCallAvgHoldingTime.Conv.Avg

Source Section

FddCell

CsMtCallAvgHoldingTimeConvCum

CS mobile terminating call average holding time (Cum)

Data Source

RNC C-Node

Source Field

VS.CsMtCallAvgHoldingTime.Conv.Cum

Source Section

FddCell

CsMtCallAvgHoldingTimeConvMax

CS mobile terminating call average holding time (Max)

Data Source

RNC C-Node

Source Field

VS.CsMtCallAvgHoldingTime.Conv.Max

Source Section

FddCell

CsMtCallAvgHoldingTimeConvMin

CS mobile terminating call average holding time (Min)

Data Source

RNC C-Node

Source Field

VS.CsMtCallAvgHoldingTime.Conv.Min

Source Section

FddCell

CsMtCallAvgHoldingTimeConvNbEvt

CS mobile terminating call average holding time (NbEvt)

Data Source

RNC C-Node

Source Field

VS.CsMtCallAvgHoldingTime.Conv.NbEvt

Source Section

FddCell

CsMtRabCallAvgSetupTimeConvAvg

CS mobile terminating RAB call average set up time (Avg)

Data Source

RNC C-Node

Source Field

VS.CsMtRabCallAvgSetupTime.Conv.Avg

Source Section

FddCell

CsMtRabCallAvgSetupTimeConvCum

CS mobile terminating RAB call average set up time (Cum)

Data Source

RNC C-Node

Source Field

VS.CsMtRabCallAvgSetupTime.Conv.Cum

Source Section

FddCell

CsMtRabCallAvgSetupTimeConvMax

CS mobile terminating RAB call average set up time (Max)

Data Source

RNC C-Node

Source Field

VS.CsMtRabCallAvgSetupTime.Conv.Max

Source Section

FddCell

CsMtRabCallAvgSetupTimeConvMin

CS mobile terminating RAB call average set up time (Min)

Data Source

RNC C-Node

Source Field

VS.CsMtRabCallAvgSetupTime.Conv.Min

Source Section

FddCell

CsMtRabCallAvgSetupTimeConvNbEvt

CS mobile terminating RAB call average set up time (NbEvt)

Data Source

RNC C-Node

Source Field

VS.CsMtRabCallAvgSetupTime.Conv.NbEvt

Source Section

FddCell

CsMtState2FailureCnFwdCntErrS2

number of CS mobile terminating failure at state 2. (CnFwdCntErrS2)

Data Source

RNC C-Node

Source Field

VS.CsMtState2Failure.CnFwdCntErrS2

Source Section

FddCell

CsMtState2FailureCnInvalSubS2

number of CS mobile terminating failure at state 2. (CnInvalSubS2)

Data Source

RNC C-Node

Source Field

VS.CsMtState2Failure.CnInvalSubS2

Source Section

FddCell

CsMtState2FailureCnIsupErrS2

number of CS mobile terminating failure at state 2. (CnIsupErrS2)

Data Source

RNC C-Node

Source Field

VS.CsMtState2Failure.CnIsupErrS2

Source Section

FddCell

CsMtState2FailureCnMobileErrS2

number of CS mobile terminating failure at state 2. (CnMobileErrS2)

Data Source

RNC C-Node

Source Field

VS.CsMtState2Failure.CnMobileErrS2

Source Section

FddCell

CsMtState2FailureCnOrgRelCspS2

number of CS mobile terminating failure at state 2. (CnOrgRelCspS2)

Data Source

RNC C-Node

Source Field

VS.CsMtState2Failure.CnOrgRelCspS2

Source Section

FddCell

CsMtState2FailureCnOrgRelMmS2

number of CS mobile terminating failure at state 2. (CnOrgRelMmS2)

Data Source

RNC C-Node

Source Field

VS.CsMtState2Failure.CnOrgRelMmS2

Source Section

FddCell

CsMtState3FailureCnFwdCntErrS3

number of CS mobile terminating failure at state 3. (CnFwdCntErrS3)

Data Source

RNC C-Node

Source Field

VS.CsMtState3Failure.CnFwdCntErrS3

Source Section

FddCell

CsMtState3FailureCnIsupErrS3

number of CS mobile terminating failure at state 3. (CnIsupErrS3)

Data Source

RNC C-Node

Source Field

VS.CsMtState3Failure.CnIsupErrS3

Source Section

FddCell

CsMtState3FailureCnMobileErrS3

number of CS mobile terminating failure at state 3. (CnMobileErrS3)

Data Source

RNC C-Node

Source Field

VS.CsMtState3Failure.CnMobileErrS3

Source Section

FddCell

CsMtState3FailureCnOrgRelCspS3

number of CS mobile terminating failure at state 3. (CnOrgRelCspS3)

Data Source

RNC C-Node

Source Field

VS.CsMtState3Failure.CnOrgRelCspS3

Source Section

FddCell

CsMtState4FailureCnFwdCntErrS4

number of CS mobile terminating failure at state 4. (CnFwdCntErrS4)

Data Source

RNC C-Node

Source Field

VS.CsMtState4Failure.CnFwdCntErrS4

Source Section

FddCell

CsMtState4FailureCnIsupErrS4

number of CS mobile terminating failure at state 4. (CnIsupErrS4)

Data Source

RNC C-Node

Source Field

VS.CsMtState4Failure.CnIsupErrS4

Source Section

FddCell

CsMtState4FailureCnMobileErrS4

number of CS mobile terminating failure at state 4. (CnMobileErrS4)

Data Source

RNC C-Node

Source Field

VS.CsMtState4Failure.CnMobileErrS4

Source Section

FddCell

CsMtState4FailureCnNoAnsS4

number of CS mobile terminating failure at state 4. (CnNoAnsS4)

Data Source

RNC C-Node

Source Field

VS.CsMtState4Failure.CnNoAnsS4

Source Section

FddCell

CsMtState4FailureCnOrgRelCspS4

number of CS mobile terminating failure at state 4. (CnOrgRelCspS4)

Data Source

RNC C-Node

Source Field

VS.CsMtState4Failure.CnOrgRelCspS4

Source Section

FddCell

CsMtState4FailureCnTerEtcS4

number of CS mobile terminating failure at state 4. (CnTerEtcS4)

Data Source

RNC C-Node

Source Field

VS.CsMtState4Failure.CnTerEtcS4

Source Section

FddCell

CsSuccRelocImgAtt

The number of CS call allocated at new RNC by relocation successful (ImgAtt)

Data Source

RNC C-Node

Source Field

VS.CsSuccReloc.ImgAtt

Source Section

FddCell

CsSuccRelocVceAtt

The number of CS call allocated at new RNC by relocation successful (VceAtt)

Data Source

RNC C-Node

Source Field

VS.CsSuccReloc.VceAtt

Source Section

FddCell

Data_interval_for_NodeB_data

Data interval for the Node B data collection in seconds. It is taken from the relevant <gp> tag in the Node B XML data file.

Data Source

NodeB

Source Field

<gp> tag

Data_interval_for_RNC_data

Data interval for the RNC data collection in seconds. It is taken from the relevant <gp> tag in the RNC XML data file.

Data Source

RNC

Source Field

<gp> tag

DataRateAtt_Dec_CongControl

Attempts to Decrease the Data Rate due to Congestion Control

Data Source

RNC

Source Field

VS.DataRateAtt.Dec.CongControl

Source Section

Data Rate Modification Performance Measurements

DataRateAtt_Dec_CSDestab

Attempts to Decrease the Data Rate due to CSD Establishment

Data Source

RNC

Source Field

VS.DataRateAtt.Dec.CSDestab

Source Section

Data Rate Modification Performance Measurements

DataRateAtt_Dec_QoSDBC

Attempts to Decrease the Data Rate due to QoS based DBC Downgrade

Data Source

RNC

Source Field

VS.DataRateAtt.Dec.QoSDBC

Source Section

Data Rate Modification Performance Measurements

DataRateAtt_Dec_Qual

Attempts to Decrease the Data Rate due to Quality

Data Source

RNC

Source Field

VS.DataRateAtt.Dec.Qual

Source Section

Data Rate Modification Performance Measurements

DataRateAtt_Dec_RABMod

Attempts to Decrease the RB Data Rate due to RAB Modification

Data Source

RNC

Source Field

VS.DataRateAtt.Dec.RABMod

Source Section

Data Rate Modification Performance Measurements

DataRateAtt_Dec_Traffic

Attempts to Decrease the Data Rate due to Decreased Traffic Amount

Data Source

RNC

Source Field

VS.DataRateAtt.Dec.Traffic

Source Section

Data Rate Modification Performance Measurements

DataRateAtt_Inc

Number of Data Rate Reconfiguration Attempts made by the RNC in Cell DCH to increase the data rate

Data Source

RNC

Source Field

VS.DataRateAtt.Inc

Source Section

Data Rate Modification Performance Measurements

DataRateAtt_Inc_CSV

Attempted Increase of CSV Data Rate (AMR Codec Change)

Data Source

RNC

Source Field

VS.DataRateAtt.Inc.CSV

Source Section

Speech Codecs

DataRateAttDecCongDowngradeDL

Number of attempts to decrease the data rate due to congestion downgrade. (DL)

Data Source

RNC C-Node

Source Field

VS.DataRateAtt.Dec.CongDowngrade.DL

Source Section

FddCell

DataRateAttDecCongDowngradeUL

Number of attempts to decrease the data rate due to congestion downgrade. (UL)

Data Source

RNC C-Node

Source Field

VS.DataRateAtt.Dec.CongDowngrade.UL

Source Section

FddCell

DataRateAttDecRABModCell

The number of attempts to decrease the data rate on the RB initiated by an RNC RAB Modification Request per cell. (Cell)

Data Source

RNC C-Node

Source Field

VS.DataRateAtt.Dec.RABMod.Cell

Source Section

FddCell

DataRateFail_Dec_RABMod

Failed Attempts to Modify the RB Data Rate due to RAB Modification

Data Source

RNC

Source Field

VS.DataRateFail.Dec.RABMod

Source Section

Data Rate Modification Performance Measurements

DataRateFail_FailMsg

Number of Failed Data Rate Modification Attempts - Transport Channel Reconfiguration Failure Message received

Data Source

RNC

Source Field

VS.DataRateFail.FailMsg

Source Section

Data Rate Modification Performance Measurements

DataRateFail_Timeout

Number of Failed Data Rate Modification Attempts - Timeout

Data Source

RNC

Source Field

VS.DataRateFail.Timeout

Source Section

Data Rate Modification Performance Measurements

DataRateFailDecRABModCell

The number of failed attempts to modify the data rate on the RB, where the data rate modification is initiated by a RNC initiated RAB Modification. (Cell)

Data Source

RNC C-Node

Source Field

VS.DataRateFail.Dec.RABMod.Cell

Source Section

FddCell

DataRateSucc_Inc_CSV

Successful Increase of CSV Data Rate (AMR Codec Change)

Data Source

RNC

Source Field

VS.DataRateSucc.Inc.CSV

Source Section

Speech Codecs

DCHToHsdpaUnsuccessfulRABRelease

Number of unsuccessful DCH to HSDPA transition. Counter is meaningless when feature PM 29797 Multi-service on HSDPA is enabled (RABRelease)

Data Source

RNC C-Node

Source Field

VS.DCHToHsdpaUnsuccessful.RABRelease

Source Section

FddCell

DCHToHsdpaUnsuccessfulRABSetup

Number of unsuccessful DCH to HSDPA transition. Counter is meaningless when feature PM 29797 Multi-service on HSDPA is enabled (RABSetup)

Data Source

RNC C-Node

Source Field

VS.DCHToHsdpaUnsuccessful.RABSetup

Source Section

FddCell

DdUlAmrABtBadFrmAmrRtChgLnkFrm10p2

Number of AMR frames with Class A bits Transport Block received with CRCi = 1 (AmrRtChgLnkFrm10p2)

Data Source

RNC C-Node

Source Field

VS.DdUlAmrABtBadFrm.AmrRtChgLnkFrm10p2

Source Section

FddCell

DdUlAmrABtBadFrmAmrRtChgLnkFrm12p2

Number of AMR frames with Class A bits Transport Block received with CRCi = 1 (AmrRtChgLnkFrm12p2)

Data Source

RNC C-Node

Source Field

VS.DdUlAmrABtBadFrm.AmrRtChgLnkFrm12p2

Source Section

FddCell

DdUlAmrABtBadFrmAmrRtChgLnkFrm4p75

Number of AMR frames with Class A bits Transport Block received with CRCi = 1 (AmrRtChgLnkFrm4p75)

Data Source

RNC C-Node

Source Field

VS.DdUlAmrABtBadFrm.AmrRtChgLnkFrm4p75

Source Section

FddCell

DdUlAmrABtBadFrmAmrRtChgLnkFrm5p15

Number of AMR frames with Class A bits Transport Block received with CRCi = 1 (AmrRtChgLnkFrm5p15)

Data Source

RNC C-Node

Source Field

VS.DdUlAmrABtBadFrm.AmrRtChgLnkFrm5p15

Source Section

FddCell

DdUlAmrABtBadFrmAmrRtChgLnkFrm5p9

Number of AMR frames with Class A bits Transport Block received with CRCi = 1 (AmrRtChgLnkFrm5p9)

Data Source

RNC C-Node

Source Field

VS.DdUlAmrABtBadFrm.AmrRtChgLnkFrm5p9

Source Section

FddCell

DdUlAmrABtBadFrmAmrRtChgLnkFrm6p7

Number of AMR frames with Class A bits Transport Block received with CRCi = 1 (AmrRtChgLnkFrm6p7)

Data Source

RNC C-Node

Source Field

VS.DdUlAmrABtBadFrm.AmrRtChgLnkFrm6p7

Source Section

FddCell

DdUlAmrABtBadFrmAmrRtChgLnkFrm7p4

Number of AMR frames with Class A bits Transport Block received with CRCi = 1 (AmrRtChgLnkFrm7p4)

Data Source

RNC C-Node

Source Field

VS.DdUlAmrABtBadFrm.AmrRtChgLnkFrm7p4

Source Section

FddCell

DdUlAmrABtBadFrmAmrRtChgLnkFrm7p95

Number of AMR frames with Class A bits Transport Block received with CRCi = 1 (AmrRtChgLnkFrm7p95)

Data Source

RNC C-Node

Source Field

VS.DdUlAmrABtBadFrm.AmrRtChgLnkFrm7p95

Source Section

FddCell

DdUlAmrABtGoodFrmAmrRtChgLnkFrm10p2

Number of AMR frames with Class A bits Transport Block received with CRCi = 0 (AmrRtChgLnkFrm10p2)

Data Source

RNC C-Node

Source Field

VS.DdUlAmrABtGoodFrm.AmrRtChgLnkFrm10p2

Source Section

FddCell

DdUlAmrABtGoodFrmAmrRtChgLnkFrm12p2

Number of AMR frames with Class A bits Transport Block received with CRCi = 0 (AmrRtChgLnkFrm12p2)

Data Source

RNC C-Node

Source Field

VS.DdUlAmrABtGoodFrm.AmrRtChgLnkFrm12p2

Source Section

FddCell

DdUlAmrABtGoodFrmAmrRtChgLnkFrm4p75

Number of AMR frames with Class A bits Transport Block received with CRCi = 0 (AmrRtChgLnkFrm4p75)

Data Source

RNC C-Node

Source Field

VS.DdUlAmrABtGoodFrm.AmrRtChgLnkFrm4p75

Source Section

FddCell

DdUlAmrABtGoodFrmAmrRtChgLnkFrm5p15

Number of AMR frames with Class A bits Transport Block received with CRCi = 0 (AmrRtChgLnkFrm5p15)

Data Source

RNC C-Node

Source Field

VS.DdUlAmrABtGoodFrm.AmrRtChgLnkFrm5p15

Source Section

FddCell

DdUlAmrABtGoodFrmAmrRtChgLnkFrm5p9

Number of AMR frames with Class A bits Transport Block received with CRCi = 0 (AmrRtChgLnkFrm5p9)

Data Source

RNC C-Node

Source Field

VS.DdUlAmrABtGoodFrm.AmrRtChgLnkFrm5p9

Source Section

FddCell

DdUlAmrABtGoodFrmAmrRtChgLnkFrm6p7

Number of AMR frames with Class A bits Transport Block received with CRCi = 0 (AmrRtChgLnkFrm6p7)

Data Source

RNC C-Node

Source Field

VS.DdUlAmrABtGoodFrm.AmrRtChgLnkFrm6p7

Source Section

FddCell

DdUlAmrABtGoodFrmAmrRtChgLnkFrm7p4

Number of AMR frames with Class A bits Transport Block received with CRCi = 0 (AmrRtChgLnkFrm7p4)

Data Source

RNC C-Node

Source Field

VS.DdUlAmrABtGoodFrm.AmrRtChgLnkFrm7p4

Source Section

FddCell

DdUlAmrABtGoodFrmAmrRtChgLnkFrm7p95

Number of AMR frames with Class A bits Transport Block received with CRCi = 0 (AmrRtChgLnkFrm7p95)

Data Source

RNC C-Node

Source Field

VS.DdUlAmrABtGoodFrm.AmrRtChgLnkFrm7p95

Source Section

FddCell

DdUlAmrWbABtBadFrmAmrWbRt1265

Number of AMR WB frames with Class A bits Transport Block received with CRCi = 1 (AmrWbRt1265)

Data Source

RNC C-Node

Source Field

VS.DdUlAmrWbABtBadFrm.AmrWbRt1265

Source Section

FddCell

DdUlAmrWbABtBadFrmAmrWbRt660

Number of AMR WB frames with Class A bits Transport Block received with CRCi = 1 (AmrWbRt660)

Data Source

RNC C-Node

Source Field

VS.DdUlAmrWbABtBadFrm.AmrWbRt660

Source Section

FddCell

DdUlAmrWbABtBadFrmAmrWbRt885

Number of AMR WB frames with Class A bits Transport Block received with CRCi = 1 (AmrWbRt885)

Data Source

RNC C-Node

Source Field

VS.DdUlAmrWbABtBadFrm.AmrWbRt885

Source Section

FddCell

DdUlAmrWbABtGoodFrmAmrWbRt1265

Number of AMR WB frames with Class A bits Transport Block received with CRCi = 0 (AmrWbRt1265)

Data Source

RNC C-Node

Source Field

VS.DdUlAmrWbABtGoodFrm.AmrWbRt1265

Source Section

FddCell

DdUlAmrWbABtGoodFrmAmrWbRt660

Number of AMR WB frames with Class A bits Transport Block received with CRCi = 0 (AmrWbRt660)

Data Source

RNC C-Node

Source Field

VS.DdUlAmrWbABtGoodFrm.AmrWbRt660

Source Section

FddCell

DdUlAmrWbABtGoodFrmAmrWbRt885

Number of AMR WB frames with Class A bits Transport Block received with CRCi = 0 (AmrWbRt885)

Data Source

RNC C-Node

Source Field

VS.DdUlAmrWbABtGoodFrm.AmrWbRt885

Source Section

FddCell

DedicatedDownlinkActivityRlcRefCellDlRabCsData64

Time that RAB is actively transmitting data in the downlink (DlRabCsData64)

Data Source

RNC C-Node

Source Field

VS.DedicatedDownlinkActivityRlcRefCell.DlRabCsData64

Source Section

FddCell

DedicatedDownlinkActivityRlcRefCellDlRabCsSpeech

Time that RAB is actively transmitting data in the downlink (DlRabCsSpeech)

Data Source

RNC C-Node

Source Field

VS.DedicatedDownlinkActivityRlcRefCell.DlRabCsSpeech

Source Section

FddCell

DedicatedDownlinkActivityRlcRefCellDlRabCsStr

Time that RAB is actively transmitting data in the downlink (DlRabCsStr)

Data Source

RNC C-Node

Source Field

VS.DedicatedDownlinkActivityRlcRefCell.DlRabCsStr

Source Section

FddCell

DedicatedDownlinkActivityRlcRefCellDlRabHsdpa

Time that RAB is actively transmitting data in the downlink (DlRabHsdpa)

Data Source

RNC C-Node

Source Field

VS.DedicatedDownlinkActivityRlcRefCell.DlRabHsdpa

Source Section

FddCell

DedicatedDownlinkActivityRlcRefCellDlRabOther

Time that RAB is actively transmitting data in the downlink (DlRabOther)

Data Source

RNC C-Node

Source Field

VS.DedicatedDownlinkActivityRlcRefCell.DlRabOther

Source Section

FddCell

DedicatedDownlinkActivityRlcRefCellDlRabPsIb128

Time that RAB is actively transmitting data in the downlink (DlRabPsIb128)

Data Source

RNC C-Node

Source Field

VS.DedicatedDownlinkActivityRlcRefCell.DlRabPsIb128

Source Section

FddCell

DedicatedDownlinkActivityRlcRefCellDlRabPsIb16

Time that RAB is actively transmitting data in the downlink (DlRabPsIb16)

Data Source

RNC C-Node

Source Field

VS.DedicatedDownlinkActivityRlcRefCell.DlRabPsIb16

Source Section

FddCell

DedicatedDownlinkActivityRlcRefCellDlRabPsIb256

Time that RAB is actively transmitting data in the downlink (DlRabPsIb256)

Data Source

RNC C-Node

Source Field

VS.DedicatedDownlinkActivityRlcRefCell.DlRabPsIb256

Source Section

FddCell

DedicatedDownlinkActivityRlcRefCellDlRabPsIb32

Time that RAB is actively transmitting data in the downlink (DlRabPsIb32)

Data Source

RNC C-Node

Source Field

VS.DedicatedDownlinkActivityRlcRefCell.DlRabPsIb32

Source Section

FddCell

DedicatedDownlinkActivityRlcRefCellDlRabPsIb384

Time that RAB is actively transmitting data in the downlink (DlRabPsIb384)

Data Source

RNC C-Node

Source Field

VS.DedicatedDownlinkActivityRlcRefCell.DlRabPsIb384

Source Section

FddCell

DedicatedDownlinkActivityRlcRefCellDlRabPsIb64

Time that RAB is actively transmitting data in the downlink (DlRabPsIb64)

Data Source

RNC C-Node

Source Field

VS.DedicatedDownlinkActivityRlcRefCell.DlRabPsIb64

Source Section

FddCell

DedicatedDownlinkActivityRlcRefCellDlRabPsIb8

Time that RAB is actively transmitting data in the downlink (DlRabPsIb8)

Data Source

RNC C-Node

Source Field

VS.DedicatedDownlinkActivityRlcRefCell.DlRabPsIb8

Source Section

FddCell

DedicatedDownlinkActivityRlcRefCellDlRabPsStr128

Time that RAB is actively transmitting data in the downlink (DlRabPsStr128)

Data Source

RNC C-Node

Source Field

VS.DedicatedDownlinkActivityRlcRefCell.DlRabPsStr128

Source Section

FddCell

DedicatedDownlinkActivityRlcRefCellDlRabPsStr256

Time that RAB is actively transmitting data in the downlink (DlRabPsStr256)

Data Source

RNC C-Node

Source Field

VS.DedicatedDownlinkActivityRlcRefCell.DlRabPsStr256

Source Section

FddCell

DedicatedDownlinkActivityRlcRefCellDlRabPsStr384

Time that RAB is actively transmitting data in the downlink (DlRabPsStr384)

Data Source

RNC C-Node

Source Field

VS.DedicatedDownlinkActivityRlcRefCell.DlRabPsStr384

Source Section

FddCell

DedicatedDownlinkActivityRlcRefCellDlRabPsStrOther

Time that RAB is actively transmitting data in the downlink (DlRabPsStrOther)

Data Source

RNC C-Node

Source Field

VS.DedicatedDownlinkActivityRlcRefCell.DlRabPsStrOther

Source Section

FddCell

DedicatedDownlinkActivityRlcRefCellDlRabSRB

Time that RAB is actively transmitting data in the downlink (DlRabSRB)

Data Source

RNC C-Node

Source Field

VS.DedicatedDownlinkActivityRlcRefCell.DlRabSRB

Source Section

FddCell

DedicatedDownlinkKbytesRlcActiveCellsDlRabCsData64

Number of Kbytes of SDU sent on downlink for each cell of the active set (DlRabCsData64)

Data Source

RNC C-Node

Source Field

VS.DedicatedDownlinkKbytesRlcActiveCells.DlRabCsData64

Source Section

FddCell

DedicatedDownlinkKbytesRlcActiveCellsDlRabCsSpeech

Number of Kbytes of SDU sent on downlink for each cell of the active set (DlRabCsSpeech)

Data Source

RNC C-Node

Source Field

VS.DedicatedDownlinkKbytesRlcActiveCells.DlRabCsSpeech

Source Section

FddCell

DedicatedDownlinkKbytesRlcActiveCellsDlRabCsStr

Number of Kbytes of SDU sent on downlink for each cell of the active set (DlRabCsStr)

Data Source

RNC C-Node

Source Field

VS.DedicatedDownlinkKbytesRlcActiveCells.DlRabCsStr

Source Section

FddCell

DedicatedDownlinkKbytesRlcActiveCellsDlRabHsdpa

Number of Kbytes of SDU sent on downlink for each cell of the active set (DlRabHsdpa)

Data Source

RNC C-Node

Source Field

VS.DedicatedDownlinkKbytesRlcActiveCells.DlRabHsdpa

Source Section

FddCell

DedicatedDownlinkKbytesRlcActiveCellsDlRabOther

Number of Kbytes of SDU sent on downlink for each cell of the active set (DlRabOther)

Data Source

RNC C-Node

Source Field

VS.DedicatedDownlinkKbytesRlcActiveCells.DlRabOther

Source Section

FddCell

DedicatedDownlinkKbytesRlcActiveCellsDlRabPsIb128

Number of Kbytes of SDU sent on downlink for each cell of the active set (DlRabPsIb128)

Data Source

RNC C-Node

Source Field

VS.DedicatedDownlinkKbytesRlcActiveCells.DlRabPsIb128

Source Section

FddCell

DedicatedDownlinkKbytesRlcActiveCellsDlRabPsIb16

Number of Kbytes of SDU sent on downlink for each cell of the active set (DlRabPsIb16)

Data Source

RNC C-Node

Source Field

VS.DedicatedDownlinkKbytesRlcActiveCells.DlRabPsIb16

Source Section

FddCell

DedicatedDownlinkKbytesRlcActiveCellsDlRabPsIb256

Number of Kbytes of SDU sent on downlink for each cell of the active set (DlRabPsIb256)

Data Source

RNC C-Node

Source Field

VS.DedicatedDownlinkKbytesRlcActiveCells.DlRabPsIb256

Source Section

FddCell

DedicatedDownlinkKbytesRlcActiveCellsDlRabPsIb32

Number of Kbytes of SDU sent on downlink for each cell of the active set (DlRabPsIb32)

Data Source

RNC C-Node

Source Field

VS.DedicatedDownlinkKbytesRlcActiveCells.DlRabPsIb32

Source Section

FddCell

DedicatedDownlinkKbytesRlcActiveCellsDlRabPsIb384

Number of Kbytes of SDU sent on downlink for each cell of the active set (DlRabPsIb384)

Data Source

RNC C-Node

Source Field

VS.DedicatedDownlinkKbytesRlcActiveCells.DlRabPsIb384

Source Section

FddCell

DedicatedDownlinkKbytesRlcActiveCellsDlRabPsIb64

Number of Kbytes of SDU sent on downlink for each cell of the active set (DlRabPsIb64)

Data Source

RNC C-Node

Source Field

VS.DedicatedDownlinkKbytesRlcActiveCells.DlRabPsIb64

Source Section

FddCell

DedicatedDownlinkKbytesRlcActiveCellsDlRabPsIb8

Number of Kbytes of SDU sent on downlink for each cell of the active set (DlRabPsIb8)

Data Source

RNC C-Node

Source Field

VS.DedicatedDownlinkKbytesRlcActiveCells.DlRabPsIb8

Source Section

FddCell

DedicatedDownlinkKbytesRlcActiveCellsDlRabPsStr128

Number of Kbytes of SDU sent on downlink for each cell of the active set (DlRabPsStr128)

Data Source

RNC C-Node

Source Field

VS.DedicatedDownlinkKbytesRlcActiveCells.DlRabPsStr128

Source Section

FddCell

DedicatedDownlinkKbytesRlcActiveCellsDlRabPsStr256

Number of Kbytes of SDU sent on downlink for each cell of the active set (DlRabPsStr256)

Data Source

RNC C-Node

Source Field

VS.DedicatedDownlinkKbytesRlcActiveCells.DlRabPsStr256

Source Section

FddCell

DedicatedDownlinkKbytesRlcActiveCellsDlRabPsStr384

Number of Kbytes of SDU sent on downlink for each cell of the active set (DlRabPsStr384)

Data Source

RNC C-Node

Source Field

VS.DedicatedDownlinkKbytesRlcActiveCells.DlRabPsStr384

Source Section

FddCell

DedicatedDownlinkKbytesRlcActiveCellsDlRabPsStrOther

Number of Kbytes of SDU sent on downlink for each cell of the active set (DlRabPsStrOther)

Data Source

RNC C-Node

Source Field

VS.DedicatedDownlinkKbytesRlcActiveCells.DlRabPsStrOther

Source Section

FddCell

DedicatedDownlinkKbytesRlcActiveCellsDlRabSRB

Number of Kbytes of SDU sent on downlink for each cell of the active set (DlRabSRB)

Data Source

RNC C-Node

Source Field

VS.DedicatedDownlinkKbytesRlcActiveCells.DlRabSRB

Source Section

FddCell

DedicatedDownlinkKbytesRlcReferenceCellDlRabCsData64

Number of Kbytes of SDU sent on downlink for the reference cell (DlRabCsData64)

Data Source

RNC C-Node

Source Field

VS.DedicatedDownlinkKbytesRlcReferenceCell.DlRabCsData64

Source Section

FddCell

DedicatedDownlinkKbytesRlcReferenceCellDlRabCsSpeech

Number of Kbytes of SDU sent on downlink for the reference cell (DlRabCsSpeech)

Data Source

RNC C-Node

Source Field

VS.DedicatedDownlinkKbytesRlcReferenceCell.DlRabCsSpeech

Source Section

FddCell

DedicatedDownlinkKbytesRlcReferenceCellDlRabCsStr

Number of Kbytes of SDU sent on downlink for the reference cell (DlRabCsStr)

Data Source

RNC C-Node

Source Field

VS.DedicatedDownlinkKbytesRlcReferenceCell.DlRabCsStr

Source Section

FddCell

DedicatedDownlinkKbytesRlcReferenceCellDlRabHsdpa

Number of Kbytes of SDU sent on downlink for the reference cell (DlRabHsdpa)

Data Source

RNC C-Node

Source Field

VS.DedicatedDownlinkKbytesRlcReferenceCell.DlRabHsdpa

Source Section

FddCell

DedicatedDownlinkKbytesRlcReferenceCellDlRabOther

Number of Kbytes of SDU sent on downlink for the reference cell (DlRabOther)

Data Source

RNC C-Node

Source Field

VS.DedicatedDownlinkKbytesRlcReferenceCell.DlRabOther

Source Section

FddCell

DedicatedDownlinkKbytesRlcReferenceCellDlRabPsIb128

Number of Kbytes of SDU sent on downlink for the reference cell (DlRabPsIb128)

Data Source

RNC C-Node

Source Field

VS.DedicatedDownlinkKbytesRlcReferenceCell.DlRabPsIb128

Source Section

FddCell

DedicatedDownlinkKbytesRlcReferenceCellDlRabPsIb16

Number of Kbytes of SDU sent on downlink for the reference cell (DlRabPsIb16)

Data Source

RNC C-Node

Source Field

VS.DedicatedDownlinkKbytesRlcReferenceCell.DlRabPsIb16

Source Section

FddCell

DedicatedDownlinkKbytesRlcReferenceCellDlRabPsIb256

Number of Kbytes of SDU sent on downlink for the reference cell (DlRabPsIb256)

Data Source

RNC C-Node

Source Field

VS.DedicatedDownlinkKbytesRlcReferenceCell.DlRabPsIb256

Source Section

FddCell

DedicatedDownlinkKbytesRlcReferenceCellDlRabPsIb32

Number of Kbytes of SDU sent on downlink for the reference cell (DlRabPsIb32)

Data Source

RNC C-Node

Source Field

VS.DedicatedDownlinkKbytesRlcReferenceCell.DlRabPsIb32

Source Section

FddCell

DedicatedDownlinkKbytesRlcReferenceCellDlRabPsIb384

Number of Kbytes of SDU sent on downlink for the reference cell (DlRabPsIb384)

Data Source

RNC C-Node

Source Field

VS.DedicatedDownlinkKbytesRlcReferenceCell.DlRabPsIb384

Source Section

FddCell

DedicatedDownlinkKbytesRlcReferenceCellDlRabPsIb64

Number of Kbytes of SDU sent on downlink for the reference cell (DlRabPsIb64)

Data Source

RNC C-Node

Source Field

VS.DedicatedDownlinkKbytesRlcReferenceCell.DlRabPsIb64

Source Section

FddCell

DedicatedDownlinkKbytesRlcReferenceCellDlRabPsIb8

Number of Kbytes of SDU sent on downlink for the reference cell (DlRabPsIb8)

Data Source

RNC C-Node

Source Field

VS.DedicatedDownlinkKbytesRlcReferenceCell.DlRabPsIb8

Source Section

FddCell

DedicatedDownlinkKbytesRlcReferenceCellDlRabPsStr128

Number of Kbytes of SDU sent on downlink for the reference cell (DlRabPsStr128)

Data Source

RNC C-Node

Source Field

VS.DedicatedDownlinkKbytesRlcReferenceCell.DlRabPsStr128

Source Section

FddCell

DedicatedDownlinkKbytesRlcReferenceCellDlRabPsStr256

Number of Kbytes of SDU sent on downlink for the reference cell (DlRabPsStr256)

Data Source

RNC C-Node

Source Field

VS.DedicatedDownlinkKbytesRlcReferenceCell.DlRabPsStr256

Source Section

FddCell

DedicatedDownlinkKbytesRlcReferenceCellDlRabPsStr384

Number of Kbytes of SDU sent on downlink for the reference cell (DlRabPsStr384)

Data Source

RNC C-Node

Source Field

VS.DedicatedDownlinkKbytesRlcReferenceCell.DlRabPsStr384

Source Section

FddCell

DedicatedDownlinkKbytesRlcReferenceCellDlRabPsStrOther

Number of Kbytes of SDU sent on downlink for the reference cell (DlRabPsStrOther)

Data Source

RNC C-Node

Source Field

VS.DedicatedDownlinkKbytesRlcReferenceCell.DlRabPsStrOther

Source Section

FddCell

DedicatedDownlinkKbytesRlcReferenceCellDlRabSRB

Number of Kbytes of SDU sent on downlink for the reference cell (DlRabSRB)

Data Source

RNC C-Node

Source Field

VS.DedicatedDownlinkKbytesRlcReferenceCell.DlRabSRB

Source Section

FddCell

DedicatedDownlinkPdusRlcReferenceCellDlRabCsData64

Number of RLC PDUs sent on downlink for the reference cell (DlRabCsData64)

Data Source

RNC C-Node

Source Field

VS.DedicatedDownlinkPdusRlcReferenceCell.DlRabCsData64

Source Section

FddCell

DedicatedDownlinkPdusRlcReferenceCellDlRabCsSpeech

Number of RLC PDUs sent on downlink for the reference cell (DlRabCsSpeech)

Data Source

RNC C-Node

Source Field

VS.DedicatedDownlinkPdusRlcReferenceCell.DlRabCsSpeech

Source Section

FddCell

DedicatedDownlinkPdusRlcReferenceCellDlRabCsStr

Number of RLC PDUs sent on downlink for the reference cell (DlRabCsStr)

Data Source

RNC C-Node

Source Field

VS.DedicatedDownlinkPdusRlcReferenceCell.DlRabCsStr

Source Section

FddCell

DedicatedDownlinkPdusRlcReferenceCellDlRabHsdpa

Number of RLC PDUs sent on downlink for the reference cell (DlRabHsdpa)

Data Source

RNC C-Node

Source Field

VS.DedicatedDownlinkPdusRlcReferenceCell.DlRabHsdpa

Source Section

FddCell

DedicatedDownlinkPdusRlcReferenceCellDlRabOther

Number of RLC PDUs sent on downlink for the reference cell (DlRabOther)

Data Source

RNC C-Node

Source Field

VS.DedicatedDownlinkPdusRlcReferenceCell.DlRabOther

Source Section

FddCell

DedicatedDownlinkPdusRlcReferenceCellDlRabPsIb128

Number of RLC PDUs sent on downlink for the reference cell (DlRabPsIb128)

Data Source

RNC C-Node

Source Field

VS.DedicatedDownlinkPdusRlcReferenceCell.DlRabPsIb128

Source Section

FddCell

DedicatedDownlinkPdusRlcReferenceCellDlRabPsIb16

Number of RLC PDUs sent on downlink for the reference cell (DlRabPsIb16)

Data Source

RNC C-Node

Source Field

VS.DedicatedDownlinkPdusRlcReferenceCell.DlRabPsIb16

Source Section

FddCell

DedicatedDownlinkPdusRlcReferenceCellDlRabPsIb256

Number of RLC PDUs sent on downlink for the reference cell (DlRabPsIb256)

Data Source

RNC C-Node

Source Field

VS.DedicatedDownlinkPdusRlcReferenceCell.DlRabPsIb256

Source Section

FddCell

DedicatedDownlinkPdusRlcReferenceCellDlRabPsIb32

Number of RLC PDUs sent on downlink for the reference cell (DlRabPsIb32)

Data Source

RNC C-Node

Source Field

VS.DedicatedDownlinkPdusRlcReferenceCell.DlRabPsIb32

Source Section

FddCell

DedicatedDownlinkPdusRlcReferenceCellDlRabPsIb384

Number of RLC PDUs sent on downlink for the reference cell (DlRabPsIb384)

Data Source

RNC C-Node

Source Field

VS.DedicatedDownlinkPdusRlcReferenceCell.DlRabPsIb384

Source Section

FddCell

DedicatedDownlinkPdusRlcReferenceCellDlRabPsIb64

Number of RLC PDUs sent on downlink for the reference cell (DlRabPsIb64)

Data Source

RNC C-Node

Source Field

VS.DedicatedDownlinkPdusRlcReferenceCell.DlRabPsIb64

Source Section

FddCell

DedicatedDownlinkPdusRlcReferenceCellDlRabPsIb8

Number of RLC PDUs sent on downlink for the reference cell (DlRabPsIb8)

Data Source

RNC C-Node

Source Field

VS.DedicatedDownlinkPdusRlcReferenceCell.DlRabPsIb8

Source Section

FddCell

DedicatedDownlinkPdusRlcReferenceCellDlRabPsStr128

Number of RLC PDUs sent on downlink for the reference cell (DlRabPsStr128)

Data Source

RNC C-Node

Source Field

VS.DedicatedDownlinkPdusRlcReferenceCell.DlRabPsStr128

Source Section

FddCell

DedicatedDownlinkPdusRlcReferenceCellDlRabPsStr256

Number of RLC PDUs sent on downlink for the reference cell (DlRabPsStr256)

Data Source

RNC C-Node

Source Field

VS.DedicatedDownlinkPdusRlcReferenceCell.DlRabPsStr256

Source Section

FddCell

DedicatedDownlinkPdusRlcReferenceCellDlRabPsStr384

Number of RLC PDUs sent on downlink for the reference cell (DlRabPsStr384)

Data Source

RNC C-Node

Source Field

VS.DedicatedDownlinkPdusRlcReferenceCell.DlRabPsStr384

Source Section

FddCell

DedicatedDownlinkPdusRlcReferenceCellDlRabPsStrOther

Number of RLC PDUs sent on downlink for the reference cell (DlRabPsStrOther)

Data Source

RNC C-Node

Source Field

VS.DedicatedDownlinkPdusRlcReferenceCell.DlRabPsStrOther

Source Section

FddCell

DedicatedDownlinkPdusRlcReferenceCellDlRabSRB

Number of RLC PDUs sent on downlink for the reference cell (DlRabSRB)

Data Source

RNC C-Node

Source Field

VS.DedicatedDownlinkPdusRlcReferenceCell.DlRabSRB

Source Section

FddCell

DedicatedDownlinkRetransmittedPdusRlcReferenceCellDlRabCsData64

Number of downlink RLC PDUs retransmitted on the reference cell. This counter is not applicable to CS Radio Bearers (only applicable to AM RBs). (DlRabCsData64)

Data Source

RNC C-Node

Source Field

VS.DedicatedDownlinkRetransmittedPdusRlcReferenceCell.DlRabCsData64

Source Section

FddCell

DedicatedDownlinkRetransmittedPdusRlcReferenceCellDlRabCsSpeech

Number of downlink RLC PDUs retransmitted on the reference cell. This counter is not applicable to CS Radio Bearers (only applicable to AM RBs). (DlRabCsSpeech)

Data Source

RNC C-Node

Source Field

VS.DedicatedDownlinkRetransmittedPdusRlcReferenceCell.DlRabCsSpeech

Source Section

FddCell

DedicatedDownlinkRetransmittedPdusRlcReferenceCellDlRabCsStr

Number of downlink RLC PDUs retransmitted on the reference cell. This counter is not applicable to CS Radio Bearers (only applicable to AM RBs). (DlRabCsStr)

Data Source

RNC C-Node

Source Field

VS.DedicatedDownlinkRetransmittedPdusRlcReferenceCell.DlRabCsStr

Source Section

FddCell

DedicatedDownlinkRetransmittedPdusRlcReferenceCellDlRabHsdpa

Number of downlink RLC PDUs retransmitted on the reference cell. This counter is not applicable to CS Radio Bearers (only applicable to AM RBs). (DlRabHsdpa)

Data Source

RNC C-Node

Source Field

VS.DedicatedDownlinkRetransmittedPdusRlcReferenceCell.DlRabHsdpa

Source Section

FddCell

DedicatedDownlinkRetransmittedPdusRlcReferenceCellDlRabOther

Number of downlink RLC PDUs retransmitted on the reference cell. This counter is not applicable to CS Radio Bearers (only applicable to AM RBs). (DlRabOther)

Data Source

RNC C-Node

Source Field

VS.DedicatedDownlinkRetransmittedPdusRlcReferenceCell.DlRabOther

Source Section

FddCell

DedicatedDownlinkRetransmittedPdusRlcReferenceCellDlRabPsIb128

Number of downlink RLC PDUs retransmitted on the reference cell. This counter is not applicable to CS Radio Bearers (only applicable to AM RBs). (DlRabPsIb128)

Data Source

RNC C-Node

Source Field

VS.DedicatedDownlinkRetransmittedPdusRlcReferenceCell.DlRabPsIb128

Source Section

FddCell

DedicatedDownlinkRetransmittedPdusRlcReferenceCellDlRabPsIb16

Number of downlink RLC PDUs retransmitted on the reference cell. This counter is not applicable to CS Radio Bearers (only applicable to AM RBs). (DlRabPsIb16)

Data Source

RNC C-Node

Source Field

VS.DedicatedDownlinkRetransmittedPdusRlcReferenceCell.DlRabPsIb16

Source Section

FddCell

DedicatedDownlinkRetransmittedPdusRlcReferenceCellDlRabPsIb256

Number of downlink RLC PDUs retransmitted on the reference cell. This counter is not applicable to CS Radio Bearers (only applicable to AM RBs). (DlRabPsIb256)

Data Source

RNC C-Node

Source Field

VS.DedicatedDownlinkRetransmittedPdusRlcReferenceCell.DlRabPsIb256

Source Section

FddCell

DedicatedDownlinkRetransmittedPdusRlcReferenceCellDlRabPsIb32

Number of downlink RLC PDUs retransmitted on the reference cell. This counter is not applicable to CS Radio Bearers (only applicable to AM RBs). (DlRabPsIb32)

Data Source

RNC C-Node

Source Field

VS.DedicatedDownlinkRetransmittedPdusRlcReferenceCell.DlRabPsIb32

Source Section

FddCell

DedicatedDownlinkRetransmittedPdusRlcReferenceCellDlRabPsIb384

Number of downlink RLC PDUs retransmitted on the reference cell. This counter is not applicable to CS Radio Bearers (only applicable to AM RBs). (DlRabPsIb384)

Data Source

RNC C-Node

Source Field

VS.DedicatedDownlinkRetransmittedPdusRlcReferenceCell.DlRabPsIb384

Source Section

FddCell

DedicatedDownlinkRetransmittedPdusRlcReferenceCellDlRabPsIb64

Number of downlink RLC PDUs retransmitted on the reference cell. This counter is not applicable to CS Radio Bearers (only applicable to AM RBs). (DlRabPsIb64)

Data Source

RNC C-Node

Source Field

VS.DedicatedDownlinkRetransmittedPdusRlcReferenceCell.DlRabPsIb64

Source Section

FddCell

DedicatedDownlinkRetransmittedPdusRlcReferenceCellDlRabPsIb8

Number of downlink RLC PDUs retransmitted on the reference cell. This counter is not applicable to CS Radio Bearers (only applicable to AM RBs). (DlRabPsIb8)

Data Source

RNC C-Node

Source Field

VS.DedicatedDownlinkRetransmittedPdusRlcReferenceCell.DlRabPsIb8

Source Section

FddCell

DedicatedDownlinkRetransmittedPdusRlcReferenceCellDlRabPsStr128

Number of downlink RLC PDUs retransmitted on the reference cell. This counter is not applicable to CS Radio Bearers (only applicable to AM RBs). (DlRabPsStr128)

Data Source

RNC C-Node

Source Field

VS.DedicatedDownlinkRetransmittedPdusRlcReferenceCell.DlRabPsStr128

Source Section

FddCell

DedicatedDownlinkRetransmittedPdusRlcReferenceCellDlRabPsStr256

Number of downlink RLC PDUs retransmitted on the reference cell. This counter is not applicable to CS Radio Bearers (only applicable to AM RBs). (DlRabPsStr256)

Data Source

RNC C-Node

Source Field

VS.DedicatedDownlinkRetransmittedPdusRlcReferenceCell.DlRabPsStr256

Source Section

FddCell

DedicatedDownlinkRetransmittedPdusRlcReferenceCellDlRabPsStr384

Number of downlink RLC PDUs retransmitted on the reference cell. This counter is not applicable to CS Radio Bearers (only applicable to AM RBs). (DlRabPsStr384)

Data Source

RNC C-Node

Source Field

VS.DedicatedDownlinkRetransmittedPdusRlcReferenceCell.DlRabPsStr384

Source Section

FddCell

DedicatedDownlinkRetransmittedPdusRlcReferenceCellDlRabPsStrOther

Number of downlink RLC PDUs retransmitted on the reference cell. This counter is not applicable to CS Radio Bearers (only applicable to AM RBs). (DlRabPsStrOther)

Data Source

RNC C-Node

Source Field

VS.DedicatedDownlinkRetransmittedPdusRlcReferenceCell.DlRabPsStrOther

Source Section

FddCell

DedicatedDownlinkRetransmittedPdusRlcReferenceCellDlRabSRB

Number of downlink RLC PDUs retransmitted on the reference cell. This counter is not applicable to CS Radio Bearers (only applicable to AM RBs). (DlRabSRB)

Data Source

RNC C-Node

Source Field

VS.DedicatedDownlinkRetransmittedPdusRlcReferenceCell.DlRabSRB

Source Section

FddCell

DedicatedDownlinkSduRlcRefCellDlRabCsData64

Number of SDUs sent on dedicated downlink RLCs (from RLC counter DCH_DL_SDU) (DlRabCsData64)

Data Source

RNC C-Node

Source Field

VS.DedicatedDownlinkSduRlcRefCell.DlRabCsData64

Source Section

FddCell

DedicatedDownlinkSduRlcRefCellDlRabCsSpeech

Number of SDUs sent on dedicated downlink RLCs (from RLC counter DCH_DL_SDU) (DlRabCsSpeech)

Data Source

RNC C-Node

Source Field

VS.DedicatedDownlinkSduRlcRefCell.DlRabCsSpeech

Source Section

FddCell

DedicatedDownlinkSduRlcRefCellDlRabCsStr

Number of SDUs sent on dedicated downlink RLCs (from RLC counter DCH_DL_SDU) (DlRabCsStr)

Data Source

RNC C-Node

Source Field

VS.DedicatedDownlinkSduRlcRefCell.DlRabCsStr

Source Section

FddCell

DedicatedDownlinkSduRlcRefCellDlRabHsdpa

Number of SDUs sent on dedicated downlink RLCs (from RLC counter DCH_DL_SDU) (DlRabHsdpa)

Data Source

RNC C-Node

Source Field

VS.DedicatedDownlinkSduRlcRefCell.DlRabHsdpa

Source Section

FddCell

DedicatedDownlinkSduRlcRefCellDlRabOther

Number of SDUs sent on dedicated downlink RLCs (from RLC counter DCH_DL_SDU) (DlRabOther)

Data Source

RNC C-Node

Source Field

VS.DedicatedDownlinkSduRlcRefCell.DlRabOther

Source Section

FddCell

DedicatedDownlinkSduRlcRefCellDlRabPsIb128

Number of SDUs sent on dedicated downlink RLCs (from RLC counter DCH_DL_SDU) (DlRabPsIb128)

Data Source

RNC C-Node

Source Field

VS.DedicatedDownlinkSduRlcRefCell.DlRabPsIb128

Source Section

FddCell

DedicatedDownlinkSduRlcRefCellDlRabPsIb16

Number of SDUs sent on dedicated downlink RLCs (from RLC counter DCH_DL_SDU) (DlRabPsIb16)

Data Source

RNC C-Node

Source Field

VS.DedicatedDownlinkSduRlcRefCell.DlRabPsIb16

Source Section

FddCell

DedicatedDownlinkSduRlcRefCellDlRabPsIb256

Number of SDUs sent on dedicated downlink RLCs (from RLC counter DCH_DL_SDU) (DlRabPsIb256)

Data Source

RNC C-Node

Source Field

VS.DedicatedDownlinkSduRlcRefCell.DlRabPsIb256

Source Section

FddCell

DedicatedDownlinkSduRlcRefCellDlRabPsIb32

Number of SDUs sent on dedicated downlink RLCs (from RLC counter DCH_DL_SDU) (DlRabPsIb32)

Data Source

RNC C-Node

Source Field

VS.DedicatedDownlinkSduRlcRefCell.DlRabPsIb32

Source Section

FddCell

DedicatedDownlinkSduRlcRefCellDlRabPsIb384

Number of SDUs sent on dedicated downlink RLCs (from RLC counter DCH_DL_SDU) (DlRabPsIb384)

Data Source

RNC C-Node

Source Field

VS.DedicatedDownlinkSduRlcRefCell.DlRabPsIb384

Source Section

FddCell

DedicatedDownlinkSduRlcRefCellDlRabPsIb64

Number of SDUs sent on dedicated downlink RLCs (from RLC counter DCH_DL_SDU) (DlRabPsIb64)

Data Source

RNC C-Node

Source Field

VS.DedicatedDownlinkSduRlcRefCell.DlRabPsIb64

Source Section

FddCell

DedicatedDownlinkSduRlcRefCellDlRabPsIb8

Number of SDUs sent on dedicated downlink RLCs (from RLC counter DCH_DL_SDU) (DlRabPsIb8)

Data Source

RNC C-Node

Source Field

VS.DedicatedDownlinkSduRlcRefCell.DlRabPsIb8

Source Section

FddCell

DedicatedDownlinkSduRlcRefCellDlRabPsStr128

Number of SDUs sent on dedicated downlink RLCs (from RLC counter DCH_DL_SDU) (DlRabPsStr128)

Data Source

RNC C-Node

Source Field

VS.DedicatedDownlinkSduRlcRefCell.DlRabPsStr128

Source Section

FddCell

DedicatedDownlinkSduRlcRefCellDlRabPsStr256

Number of SDUs sent on dedicated downlink RLCs (from RLC counter DCH_DL_SDU) (DlRabPsStr256)

Data Source

RNC C-Node

Source Field

VS.DedicatedDownlinkSduRlcRefCell.DlRabPsStr256

Source Section

FddCell

DedicatedDownlinkSduRlcRefCellDlRabPsStr384

Number of SDUs sent on dedicated downlink RLCs (from RLC counter DCH_DL_SDU) (DlRabPsStr384)

Data Source

RNC C-Node

Source Field

VS.DedicatedDownlinkSduRlcRefCell.DlRabPsStr384

Source Section

FddCell

DedicatedDownlinkSduRlcRefCellDlRabPsStrOther

Number of SDUs sent on dedicated downlink RLCs (from RLC counter DCH_DL_SDU) (DlRabPsStrOther)

Data Source

RNC C-Node

Source Field

VS.DedicatedDownlinkSduRlcRefCell.DlRabPsStrOther

Source Section

FddCell

DedicatedDownlinkSduRlcRefCellDlRabSRB

Number of SDUs sent on dedicated downlink RLCs (from RLC counter DCH_DL_SDU) (DlRabSRB)

Data Source

RNC C-Node

Source Field

VS.DedicatedDownlinkSduRlcRefCell.DlRabSRB

Source Section

FddCell

DedicatedUlBlerMeasuredAmrVce

The number of times that a BLER is measured per TTI (AmrVce)

Data Source

RNC C-Node

Source Field

VS.DedicatedUlBlerMeasured.AmrVce

Source Section

FddCell

DedicatedUlBlerMeasuredCs64

The number of times that a BLER is measured per TTI (Cs64)

Data Source

RNC C-Node

Source Field

VS.DedicatedUlBlerMeasured.Cs64

Source Section

FddCell

DedicatedUlBlerMeasuredPs128

The number of times that a BLER is measured per TTI (Ps128)

Data Source

RNC C-Node

Source Field

VS.DedicatedUlBlerMeasured.Ps128

Source Section

FddCell

DedicatedUlBlerMeasuredPs384

The number of times that a BLER is measured per TTI (Ps384)

Data Source

RNC C-Node

Source Field

VS.DedicatedUlBlerMeasured.Ps384

Source Section

FddCell

DedicatedUlBlerMeasuredPs64

The number of times that a BLER is measured per TTI (Ps64)

Data Source

RNC C-Node

Source Field

VS.DedicatedUlBlerMeasured.Ps64

Source Section

FddCell

DedicatedUlBlerOverTargetBlerAmrVce

The number of times that a measured BLER per TTI exceeded the target BLER (AmrVce)

Data Source

RNC C-Node

Source Field

VS.DedicatedUlBlerOverTargetBler.AmrVce

Source Section

FddCell

DedicatedUlBlerOverTargetBlerCs64

The number of times that a measured BLER per TTI exceeded the target BLER (Cs64)

Data Source

RNC C-Node

Source Field

VS.DedicatedUlBlerOverTargetBler.Cs64

Source Section

FddCell

DedicatedUlBlerOverTargetBlerPs128

The number of times that a measured BLER per TTI exceeded the target BLER (Ps128)

Data Source

RNC C-Node

Source Field

VS.DedicatedUlBlerOverTargetBler.Ps128

Source Section

FddCell

DedicatedUlBlerOverTargetBlerPs384

The number of times that a measured BLER per TTI exceeded the target BLER (Ps384)

Data Source

RNC C-Node

Source Field

VS.DedicatedUlBlerOverTargetBler.Ps384

Source Section

FddCell

DedicatedUlBlerOverTargetBlerPs64

The number of times that a measured BLER per TTI exceeded the target BLER (Ps64)

Data Source

RNC C-Node

Source Field

VS.DedicatedUlBlerOverTargetBler.Ps64

Source Section

FddCell

DedicatedUlSIRchangedAmrVce

The number of times that a target SIR is changed (AmrVce)

Data Source

RNC C-Node

Source Field

VS.DedicatedUlSIRchanged.AmrVce

Source Section

FddCell

DedicatedUlSIRchangedCs64

The number of times that a target SIR is changed (Cs64)

Data Source

RNC C-Node

Source Field

VS.DedicatedUlSIRchanged.Cs64

Source Section

FddCell

DedicatedUlSIRchangedPs128

The number of times that a target SIR is changed (Ps128)

Data Source

RNC C-Node

Source Field

VS.DedicatedUlSIRchanged.Ps128

Source Section

FddCell

DedicatedUlSIRchangedPs384

The number of times that a target SIR is changed (Ps384)

Data Source

RNC C-Node

Source Field

VS.DedicatedUlSIRchanged.Ps384

Source Section

FddCell

DedicatedUlSIRchangedPs64

The number of times that a target SIR is changed (Ps64)

Data Source

RNC C-Node

Source Field

VS.DedicatedUlSIRchanged.Ps64

Source Section

FddCell

DedicatedUlSIROverMaxSIRAmrVce

The number of times that a changed target SIR exceeded the MAX SIR (AmrVce)

Data Source

RNC C-Node

Source Field

VS.DedicatedUlSIROverMaxSIR.AmrVce

Source Section

FddCell

DedicatedUlSIROverMaxSIRCs64

The number of times that a changed target SIR exceeded the MAX SIR (Cs64)

Data Source

RNC C-Node

Source Field

VS.DedicatedUlSIROverMaxSIR.Cs64

Source Section

FddCell

DedicatedUlSIROverMaxSIRPs128

The number of times that a changed target SIR exceeded the MAX SIR (Ps128)

Data Source

RNC C-Node

Source Field

VS.DedicatedUlSIROverMaxSIR.Ps128

Source Section

FddCell

DedicatedUlSIROverMaxSIRPs384

The number of times that a changed target SIR exceeded the MAX SIR (Ps384)

Data Source

RNC C-Node

Source Field

VS.DedicatedUlSIROverMaxSIR.Ps384

Source Section

FddCell

DedicatedUlSIROverMaxSIRPs64

The number of times that a changed target SIR exceeded the MAX SIR (Ps64)

Data Source

RNC C-Node

Source Field

VS.DedicatedUlSIROverMaxSIR.Ps64

Source Section

FddCell

DedicatedUlSumSIRAmrVce

The sum of the target SIRs which is chaneged for power control (AmrVce)

Data Source

RNC C-Node

Source Field

VS.DedicatedUlSumSIR.AmrVce

Source Section

FddCell

DedicatedUlSumSIRCs64

The sum of the target SIRs which is chaneged for power control (Cs64)

Data Source

RNC C-Node

Source Field

VS.DedicatedUlSumSIR.Cs64

Source Section

FddCell

DedicatedUlSumSIRPs128

The sum of the target SIRs which is chaneged for power control (Ps128)

Data Source

RNC C-Node

Source Field

VS.DedicatedUlSumSIR.Ps128

Source Section

FddCell

DedicatedUlSumSIRPs384

The sum of the target SIRs which is chaneged for power control (Ps384)

Data Source

RNC C-Node

Source Field

VS.DedicatedUlSumSIR.Ps384

Source Section

FddCell

DedicatedUlSumSIRPs64

The sum of the target SIRs which is chaneged for power control (Ps64)

Data Source

RNC C-Node

Source Field

VS.DedicatedUlSumSIR.Ps64

Source Section

FddCell

DedicatedUplinkActivityRlcRefCellUlRabCsData64

Time that RAB is actively transmitting data in the uplink (UlRabCsData64)

Data Source

RNC C-Node

Source Field

VS.DedicatedUplinkActivityRlcRefCell.UlRabCsData64

Source Section

FddCell

DedicatedUplinkActivityRlcRefCellUlRabCsSpeech

Time that RAB is actively transmitting data in the uplink (UlRabCsSpeech)

Data Source

RNC C-Node

Source Field

VS.DedicatedUplinkActivityRlcRefCell.UlRabCsSpeech

Source Section

FddCell

DedicatedUplinkActivityRlcRefCellUlRabCsStr

Time that RAB is actively transmitting data in the uplink (UlRabCsStr)

Data Source

RNC C-Node

Source Field

VS.DedicatedUplinkActivityRlcRefCell.UlRabCsStr

Source Section

FddCell

DedicatedUplinkActivityRlcRefCellUlRabHsupa

Time that RAB is actively transmitting data in the uplink (UlRabHsupa)

Data Source

RNC C-Node

Source Field

VS.DedicatedUplinkActivityRlcRefCell.UlRabHsupa

Source Section

FddCell

DedicatedUplinkActivityRlcRefCellUlRabOther

Time that RAB is actively transmitting data in the uplink (UlRabOther)

Data Source

RNC C-Node

Source Field

VS.DedicatedUplinkActivityRlcRefCell.UlRabOther

Source Section

FddCell

DedicatedUplinkActivityRlcRefCellUlRabPsIb128

Time that RAB is actively transmitting data in the uplink (UlRabPsIb128)

Data Source

RNC C-Node

Source Field

VS.DedicatedUplinkActivityRlcRefCell.UlRabPsIb128

Source Section

FddCell

DedicatedUplinkActivityRlcRefCellUlRabPsIb16

Time that RAB is actively transmitting data in the uplink (UlRabPsIb16)

Data Source

RNC C-Node

Source Field

VS.DedicatedUplinkActivityRlcRefCell.UlRabPsIb16

Source Section

FddCell

DedicatedUplinkActivityRlcRefCellUlRabPsIb32

Time that RAB is actively transmitting data in the uplink (UlRabPsIb32)

Data Source

RNC C-Node

Source Field

VS.DedicatedUplinkActivityRlcRefCell.UlRabPsIb32

Source Section

FddCell

DedicatedUplinkActivityRlcRefCellUlRabPsIb384

Time that RAB is actively transmitting data in the uplink (UlRabPsIb384)

Data Source

RNC C-Node

Source Field

VS.DedicatedUplinkActivityRlcRefCell.UlRabPsIb384

Source Section

FddCell

DedicatedUplinkActivityRlcRefCellUlRabPsIb64

Time that RAB is actively transmitting data in the uplink (UlRabPsIb64)

Data Source

RNC C-Node

Source Field

VS.DedicatedUplinkActivityRlcRefCell.UlRabPsIb64

Source Section

FddCell

DedicatedUplinkActivityRlcRefCellUlRabPsIb8

Time that RAB is actively transmitting data in the uplink (UlRabPsIb8)

Data Source

RNC C-Node

Source Field

VS.DedicatedUplinkActivityRlcRefCell.UlRabPsIb8

Source Section

FddCell

DedicatedUplinkActivityRlcRefCellUlRabPsStr16

Time that RAB is actively transmitting data in the uplink (UlRabPsStr16)

Data Source

RNC C-Node

Source Field

VS.DedicatedUplinkActivityRlcRefCell.UlRabPsStr16

Source Section

FddCell

DedicatedUplinkActivityRlcRefCellUlRabPsStr64

Time that RAB is actively transmitting data in the uplink (UlRabPsStr64)

Data Source

RNC C-Node

Source Field

VS.DedicatedUplinkActivityRlcRefCell.UlRabPsStr64

Source Section

FddCell

DedicatedUplinkActivityRlcRefCellUlRabPsStrOther

Time that RAB is actively transmitting data in the uplink (UlRabPsStrOther)

Data Source

RNC C-Node

Source Field

VS.DedicatedUplinkActivityRlcRefCell.UlRabPsStrOther

Source Section

FddCell

DedicatedUplinkActivityRlcRefCellUlRabSRB

Time that RAB is actively transmitting data in the uplink (UlRabSRB)

Data Source

RNC C-Node

Source Field

VS.DedicatedUplinkActivityRlcRefCell.UlRabSRB

Source Section

FddCell

DedicatedUplinkBadPdusRlcRefCellUlRabCsData64

Number of bad PDUs sent on Dedicated uplink for the reference cell (UlRabCsData64)

Data Source

RNC C-Node

Source Field

VS.DedicatedUplinkBadPdusRlcRefCell.UlRabCsData64

Source Section

FddCell

DedicatedUplinkBadPdusRlcRefCellUlRabCsSpeech

Number of bad PDUs sent on Dedicated uplink for the reference cell (UlRabCsSpeech)

Data Source

RNC C-Node

Source Field

VS.DedicatedUplinkBadPdusRlcRefCell.UlRabCsSpeech

Source Section

FddCell

DedicatedUplinkBadPdusRlcRefCellUlRabCsStr

Number of bad PDUs sent on Dedicated uplink for the reference cell (UlRabCsStr)

Data Source

RNC C-Node

Source Field

VS.DedicatedUplinkBadPdusRlcRefCell.UlRabCsStr

Source Section

FddCell

DedicatedUplinkBadPdusRlcRefCellUlRabHsupa

Number of bad PDUs sent on Dedicated uplink for the reference cell (UlRabHsupa)

Data Source

RNC C-Node

Source Field

VS.DedicatedUplinkBadPdusRlcRefCell.UlRabHsupa

Source Section

FddCell

DedicatedUplinkBadPdusRlcRefCellUlRabOther

Number of bad PDUs sent on Dedicated uplink for the reference cell (UlRabOther)

Data Source

RNC C-Node

Source Field

VS.DedicatedUplinkBadPdusRlcRefCell.UlRabOther

Source Section

FddCell

DedicatedUplinkBadPdusRlcRefCellUlRabPsIb128

Number of bad PDUs sent on Dedicated uplink for the reference cell (UlRabPsIb128)

Data Source

RNC C-Node

Source Field

VS.DedicatedUplinkBadPdusRlcRefCell.UlRabPsIb128

Source Section

FddCell

DedicatedUplinkBadPdusRlcRefCellUlRabPsIb16

Number of bad PDUs sent on Dedicated uplink for the reference cell (UlRabPsIb16)

Data Source

RNC C-Node

Source Field

VS.DedicatedUplinkBadPdusRlcRefCell.UlRabPsIb16

Source Section

FddCell

DedicatedUplinkBadPdusRlcRefCellUlRabPsIb32

Number of bad PDUs sent on Dedicated uplink for the reference cell (UlRabPsIb32)

Data Source

RNC C-Node

Source Field

VS.DedicatedUplinkBadPdusRlcRefCell.UlRabPsIb32

Source Section

FddCell

DedicatedUplinkBadPdusRlcRefCellUlRabPsIb384

Number of bad PDUs sent on Dedicated uplink for the reference cell (UlRabPsIb384)

Data Source

RNC C-Node

Source Field

VS.DedicatedUplinkBadPdusRlcRefCell.UlRabPsIb384

Source Section

FddCell

DedicatedUplinkBadPdusRlcRefCellUlRabPsIb64

Number of bad PDUs sent on Dedicated uplink for the reference cell (UlRabPsIb64)

Data Source

RNC C-Node

Source Field

VS.DedicatedUplinkBadPdusRlcRefCell.UlRabPsIb64

Source Section

FddCell

DedicatedUplinkBadPdusRlcRefCellUlRabPsIb8

Number of bad PDUs sent on Dedicated uplink for the reference cell (UlRabPsIb8)

Data Source

RNC C-Node

Source Field

VS.DedicatedUplinkBadPdusRlcRefCell.UlRabPsIb8

Source Section

FddCell

DedicatedUplinkBadPdusRlcRefCellUlRabPsStr16

Number of bad PDUs sent on Dedicated uplink for the reference cell (UlRabPsStr16)

Data Source

RNC C-Node

Source Field

VS.DedicatedUplinkBadPdusRlcRefCell.UlRabPsStr16

Source Section

FddCell

DedicatedUplinkBadPdusRlcRefCellUlRabPsStr64

Number of bad PDUs sent on Dedicated uplink for the reference cell (UlRabPsStr64)

Data Source

RNC C-Node

Source Field

VS.DedicatedUplinkBadPdusRlcRefCell.UlRabPsStr64

Source Section

FddCell

DedicatedUplinkBadPdusRlcRefCellUlRabPsStrOther

Number of bad PDUs sent on Dedicated uplink for the reference cell (UlRabPsStrOther)

Data Source

RNC C-Node

Source Field

VS.DedicatedUplinkBadPdusRlcRefCell.UlRabPsStrOther

Source Section

FddCell

DedicatedUplinkBadPdusRlcRefCellUlRabSRB

Number of bad PDUs sent on Dedicated uplink for the reference cell (UlRabSRB)

Data Source

RNC C-Node

Source Field

VS.DedicatedUplinkBadPdusRlcRefCell.UlRabSRB

Source Section

FddCell

DedicatedUplinkBadPdusRlcReferenceCellUlRabCsData64

Number of PS Transport Block(TB)/PDU received with CRCi = 1 (UlRabCsData64)

Data Source

RNC C-Node

Source Field

VS.DedicatedUplinkBadPdusRlcReferenceCell.UlRabCsData64

Source Section

FddCell

DedicatedUplinkBadPdusRlcReferenceCellUlRabCsSpeech

Number of PS Transport Block(TB)/PDU received with CRCi = 1 (UlRabCsSpeech)

Data Source

RNC C-Node

Source Field

VS.DedicatedUplinkBadPdusRlcReferenceCell.UlRabCsSpeech

Source Section

FddCell

DedicatedUplinkBadPdusRlcReferenceCellUlRabCsStr

Number of PS Transport Block(TB)/PDU received with CRCi = 1 (UlRabCsStr)

Data Source

RNC C-Node

Source Field

VS.DedicatedUplinkBadPdusRlcReferenceCell.UlRabCsStr

Source Section

FddCell

DedicatedUplinkBadPdusRlcReferenceCellUlRabHsupa

Number of PS Transport Block(TB)/PDU received with CRCi = 1 (UlRabHsupa)

Data Source

RNC C-Node

Source Field

VS.DedicatedUplinkBadPdusRlcReferenceCell.UlRabHsupa

Source Section

FddCell

DedicatedUplinkBadPdusRlcReferenceCellUlRabOther

Number of PS Transport Block(TB)/PDU received with CRCi = 1 (UlRabOther)

Data Source

RNC C-Node

Source Field

VS.DedicatedUplinkBadPdusRlcReferenceCell.UlRabOther

Source Section

FddCell

DedicatedUplinkBadPdusRlcReferenceCellUlRabPsIb128

Number of PS Transport Block(TB)/PDU received with CRCi = 1 (UlRabPsIb128)

Data Source

RNC C-Node

Source Field

VS.DedicatedUplinkBadPdusRlcReferenceCell.UlRabPsIb128

Source Section

FddCell

DedicatedUplinkBadPdusRlcReferenceCellUlRabPsIb16

Number of PS Transport Block(TB)/PDU received with CRCi = 1 (UlRabPsIb16)

Data Source

RNC C-Node

Source Field

VS.DedicatedUplinkBadPdusRlcReferenceCell.UlRabPsIb16

Source Section

FddCell

DedicatedUplinkBadPdusRlcReferenceCellUlRabPsIb32

Number of PS Transport Block(TB)/PDU received with CRCi = 1 (UlRabPsIb32)

Data Source

RNC C-Node

Source Field

VS.DedicatedUplinkBadPdusRlcReferenceCell.UlRabPsIb32

Source Section

FddCell

DedicatedUplinkBadPdusRlcReferenceCellUlRabPsIb384

Number of PS Transport Block(TB)/PDU received with CRCi = 1 (UlRabPsIb384)

Data Source

RNC C-Node

Source Field

VS.DedicatedUplinkBadPdusRlcReferenceCell.UlRabPsIb384

Source Section

FddCell

DedicatedUplinkBadPdusRlcReferenceCellUlRabPsIb64

Number of PS Transport Block(TB)/PDU received with CRCi = 1 (UlRabPsIb64)

Data Source

RNC C-Node

Source Field

VS.DedicatedUplinkBadPdusRlcReferenceCell.UlRabPsIb64

Source Section

FddCell

DedicatedUplinkBadPdusRlcReferenceCellUlRabPsIb8

Number of PS Transport Block(TB)/PDU received with CRCi = 1 (UlRabPsIb8)

Data Source

RNC C-Node

Source Field

VS.DedicatedUplinkBadPdusRlcReferenceCell.UlRabPsIb8

Source Section

FddCell

DedicatedUplinkBadPdusRlcReferenceCellUlRabPsStr16

Number of PS Transport Block(TB)/PDU received with CRCi = 1 (UlRabPsStr16)

Data Source

RNC C-Node

Source Field

VS.DedicatedUplinkBadPdusRlcReferenceCell.UlRabPsStr16

Source Section

FddCell

DedicatedUplinkBadPdusRlcReferenceCellUlRabPsStr64

Number of PS Transport Block(TB)/PDU received with CRCi = 1 (UlRabPsStr64)

Data Source

RNC C-Node

Source Field

VS.DedicatedUplinkBadPdusRlcReferenceCell.UlRabPsStr64

Source Section

FddCell

DedicatedUplinkBadPdusRlcReferenceCellUlRabPsStrOther

Number of PS Transport Block(TB)/PDU received with CRCi = 1 (UlRabPsStrOther)

Data Source

RNC C-Node

Source Field

VS.DedicatedUplinkBadPdusRlcReferenceCell.UlRabPsStrOther

Source Section

FddCell

DedicatedUplinkBadPdusRlcReferenceCellUlRabSRB

Number of PS Transport Block(TB)/PDU received with CRCi = 1 (UlRabSRB)

Data Source

RNC C-Node

Source Field

VS.DedicatedUplinkBadPdusRlcReferenceCell.UlRabSRB

Source Section

FddCell

DedicatedUplinkKbytesRlcActiveCellsUlRabCsData64

Number of Kbytes of SDU sent on uplink for each cell of the active set (UlRabCsData64)

Data Source

RNC C-Node

Source Field

VS.DedicatedUplinkKbytesRlcActiveCells.UlRabCsData64

Source Section

FddCell

DedicatedUplinkKbytesRlcActiveCellsUlRabCsSpeech

Number of Kbytes of SDU sent on uplink for each cell of the active set (UlRabCsSpeech)

Data Source

RNC C-Node

Source Field

VS.DedicatedUplinkKbytesRlcActiveCells.UlRabCsSpeech

Source Section

FddCell

DedicatedUplinkKbytesRlcActiveCellsUlRabCsStr

Number of Kbytes of SDU sent on uplink for each cell of the active set (UlRabCsStr)

Data Source

RNC C-Node

Source Field

VS.DedicatedUplinkKbytesRlcActiveCells.UlRabCsStr

Source Section

FddCell

DedicatedUplinkKbytesRlcActiveCellsUlRabHsupa

Number of Kbytes of SDU sent on uplink for each cell of the active set (UlRabHsupa)

Data Source

RNC C-Node

Source Field

VS.DedicatedUplinkKbytesRlcActiveCells.UlRabHsupa

Source Section

FddCell

DedicatedUplinkKbytesRlcActiveCellsUlRabOther

Number of Kbytes of SDU sent on uplink for each cell of the active set (UlRabOther)

Data Source

RNC C-Node

Source Field

VS.DedicatedUplinkKbytesRlcActiveCells.UlRabOther

Source Section

FddCell

DedicatedUplinkKbytesRlcActiveCellsUlRabPsIb128

Number of Kbytes of SDU sent on uplink for each cell of the active set (UlRabPsIb128)

Data Source

RNC C-Node

Source Field

VS.DedicatedUplinkKbytesRlcActiveCells.UlRabPsIb128

Source Section

FddCell

DedicatedUplinkKbytesRlcActiveCellsUlRabPsIb16

Number of Kbytes of SDU sent on uplink for each cell of the active set (UlRabPsIb16)

Data Source

RNC C-Node

Source Field

VS.DedicatedUplinkKbytesRlcActiveCells.UlRabPsIb16

Source Section

FddCell

DedicatedUplinkKbytesRlcActiveCellsUlRabPsIb32

Number of Kbytes of SDU sent on uplink for each cell of the active set (UlRabPsIb32)

Data Source

RNC C-Node

Source Field

VS.DedicatedUplinkKbytesRlcActiveCells.UlRabPsIb32

Source Section

FddCell

DedicatedUplinkKbytesRlcActiveCellsUlRabPsIb384

Number of Kbytes of SDU sent on uplink for each cell of the active set (UlRabPsIb384)

Data Source

RNC C-Node

Source Field

VS.DedicatedUplinkKbytesRlcActiveCells.UlRabPsIb384

Source Section

FddCell

DedicatedUplinkKbytesRlcActiveCellsUlRabPsIb64

Number of Kbytes of SDU sent on uplink for each cell of the active set (UlRabPsIb64)

Data Source

RNC C-Node

Source Field

VS.DedicatedUplinkKbytesRlcActiveCells.UlRabPsIb64

Source Section

FddCell

DedicatedUplinkKbytesRlcActiveCellsUlRabPsIb8

Number of Kbytes of SDU sent on uplink for each cell of the active set (UlRabPsIb8)

Data Source

RNC C-Node

Source Field

VS.DedicatedUplinkKbytesRlcActiveCells.UlRabPsIb8

Source Section

FddCell

DedicatedUplinkKbytesRlcActiveCellsUlRabPsStr16

Number of Kbytes of SDU sent on uplink for each cell of the active set (UlRabPsStr16)

Data Source

RNC C-Node

Source Field

VS.DedicatedUplinkKbytesRlcActiveCells.UlRabPsStr16

Source Section

FddCell

DedicatedUplinkKbytesRlcActiveCellsUlRabPsStr64

Number of Kbytes of SDU sent on uplink for each cell of the active set (UlRabPsStr64)

Data Source

RNC C-Node

Source Field

VS.DedicatedUplinkKbytesRlcActiveCells.UlRabPsStr64

Source Section

FddCell

DedicatedUplinkKbytesRlcActiveCellsUlRabPsStrOther

Number of Kbytes of SDU sent on uplink for each cell of the active set (UlRabPsStrOther)

Data Source

RNC C-Node

Source Field

VS.DedicatedUplinkKbytesRlcActiveCells.UlRabPsStrOther

Source Section

FddCell

DedicatedUplinkKbytesRlcActiveCellsUlRabSRB

Number of Kbytes of SDU sent on uplink for each cell of the active set (UlRabSRB)

Data Source

RNC C-Node

Source Field

VS.DedicatedUplinkKbytesRlcActiveCells.UlRabSRB

Source Section

FddCell

DedicatedUplinkKbytesRlcReferenceCellUlRabCsData64

Number of Kbytes of SDU sent on uplink for the reference cell. (UlRabCsData64)

Data Source

RNC C-Node

Source Field

VS.DedicatedUplinkKbytesRlcReferenceCell.UlRabCsData64

Source Section

FddCell

DedicatedUplinkKbytesRlcReferenceCellUlRabCsSpeech

Number of Kbytes of SDU sent on uplink for the reference cell. (UlRabCsSpeech)

Data Source

RNC C-Node

Source Field

VS.DedicatedUplinkKbytesRlcReferenceCell.UlRabCsSpeech

Source Section

FddCell

DedicatedUplinkKbytesRlcReferenceCellUlRabCsStr

Number of Kbytes of SDU sent on uplink for the reference cell. (UlRabCsStr)

Data Source

RNC C-Node

Source Field

VS.DedicatedUplinkKbytesRlcReferenceCell.UlRabCsStr

Source Section

FddCell

DedicatedUplinkKbytesRlcReferenceCellUlRabHsupa

Number of Kbytes of SDU sent on uplink for the reference cell. (UlRabHsupa)

Data Source

RNC C-Node

Source Field

VS.DedicatedUplinkKbytesRlcReferenceCell.UlRabHsupa

Source Section

FddCell

DedicatedUplinkKbytesRlcReferenceCellUlRabOther

Number of Kbytes of SDU sent on uplink for the reference cell. (UlRabOther)

Data Source

RNC C-Node

Source Field

VS.DedicatedUplinkKbytesRlcReferenceCell.UlRabOther

Source Section

FddCell

DedicatedUplinkKbytesRlcReferenceCellUlRabPsIb128

Number of Kbytes of SDU sent on uplink for the reference cell. (UlRabPsIb128)

Data Source

RNC C-Node

Source Field

VS.DedicatedUplinkKbytesRlcReferenceCell.UlRabPsIb128

Source Section

FddCell

DedicatedUplinkKbytesRlcReferenceCellUlRabPsIb16

Number of Kbytes of SDU sent on uplink for the reference cell. (UlRabPsIb16)

Data Source

RNC C-Node

Source Field

VS.DedicatedUplinkKbytesRlcReferenceCell.UlRabPsIb16

Source Section

FddCell

DedicatedUplinkKbytesRlcReferenceCellUlRabPsIb32

Number of Kbytes of SDU sent on uplink for the reference cell. (UlRabPsIb32)

Data Source

RNC C-Node

Source Field

VS.DedicatedUplinkKbytesRlcReferenceCell.UlRabPsIb32

Source Section

FddCell

DedicatedUplinkKbytesRlcReferenceCellUlRabPsIb384

Number of Kbytes of SDU sent on uplink for the reference cell. (UlRabPsIb384)

Data Source

RNC C-Node

Source Field

VS.DedicatedUplinkKbytesRlcReferenceCell.UlRabPsIb384

Source Section

FddCell

DedicatedUplinkKbytesRlcReferenceCellUlRabPsIb64

Number of Kbytes of SDU sent on uplink for the reference cell. (UlRabPsIb64)

Data Source

RNC C-Node

Source Field

VS.DedicatedUplinkKbytesRlcReferenceCell.UlRabPsIb64

Source Section

FddCell

DedicatedUplinkKbytesRlcReferenceCellUlRabPsIb8

Number of Kbytes of SDU sent on uplink for the reference cell. (UlRabPsIb8)

Data Source

RNC C-Node

Source Field

VS.DedicatedUplinkKbytesRlcReferenceCell.UlRabPsIb8

Source Section

FddCell

DedicatedUplinkKbytesRlcReferenceCellUlRabPsStr16

Number of Kbytes of SDU sent on uplink for the reference cell. (UlRabPsStr16)

Data Source

RNC C-Node

Source Field

VS.DedicatedUplinkKbytesRlcReferenceCell.UlRabPsStr16

Source Section

FddCell

DedicatedUplinkKbytesRlcReferenceCellUlRabPsStr64

Number of Kbytes of SDU sent on uplink for the reference cell. (UlRabPsStr64)

Data Source

RNC C-Node

Source Field

VS.DedicatedUplinkKbytesRlcReferenceCell.UlRabPsStr64

Source Section

FddCell

DedicatedUplinkKbytesRlcReferenceCellUlRabPsStrOther

Number of Kbytes of SDU sent on uplink for the reference cell. (UlRabPsStrOther)

Data Source

RNC C-Node

Source Field

VS.DedicatedUplinkKbytesRlcReferenceCell.UlRabPsStrOther

Source Section

FddCell

DedicatedUplinkKbytesRlcReferenceCellUlRabSRB

Number of Kbytes of SDU sent on uplink for the reference cell. (UlRabSRB)

Data Source

RNC C-Node

Source Field

VS.DedicatedUplinkKbytesRlcReferenceCell.UlRabSRB

Source Section

FddCell

DedicatedUplinkPdusRlcReferenceCellUlRabCsData64

Number of RLC PDUs sent on uplink for the reference cell. (UlRabCsData64)

Data Source

RNC C-Node

Source Field

VS.DedicatedUplinkPdusRlcReferenceCell.UlRabCsData64

Source Section

FddCell

DedicatedUplinkPdusRlcReferenceCellUlRabCsSpeech

Number of RLC PDUs sent on uplink for the reference cell. (UlRabCsSpeech)

Data Source

RNC C-Node

Source Field

VS.DedicatedUplinkPdusRlcReferenceCell.UlRabCsSpeech

Source Section

FddCell

DedicatedUplinkPdusRlcReferenceCellUlRabCsStr

Number of RLC PDUs sent on uplink for the reference cell. (UlRabCsStr)

Data Source

RNC C-Node

Source Field

VS.DedicatedUplinkPdusRlcReferenceCell.UlRabCsStr

Source Section

FddCell

DedicatedUplinkPdusRlcReferenceCellUlRabHsupa

Number of RLC PDUs sent on uplink for the reference cell. (UlRabHsupa)

Data Source

RNC C-Node

Source Field

VS.DedicatedUplinkPdusRlcReferenceCell.UlRabHsupa

Source Section

FddCell

DedicatedUplinkPdusRlcReferenceCellUlRabOther

Number of RLC PDUs sent on uplink for the reference cell. (UlRabOther)

Data Source

RNC C-Node

Source Field

VS.DedicatedUplinkPdusRlcReferenceCell.UlRabOther

Source Section

FddCell

DedicatedUplinkPdusRlcReferenceCellUlRabPsIb128

Number of RLC PDUs sent on uplink for the reference cell. (UlRabPsIb128)

Data Source

RNC C-Node

Source Field

VS.DedicatedUplinkPdusRlcReferenceCell.UlRabPsIb128

Source Section

FddCell

DedicatedUplinkPdusRlcReferenceCellUlRabPsIb16

Number of RLC PDUs sent on uplink for the reference cell. (UlRabPsIb16)

Data Source

RNC C-Node

Source Field

VS.DedicatedUplinkPdusRlcReferenceCell.UlRabPsIb16

Source Section

FddCell

DedicatedUplinkPdusRlcReferenceCellUlRabPsIb32

Number of RLC PDUs sent on uplink for the reference cell. (UlRabPsIb32)

Data Source

RNC C-Node

Source Field

VS.DedicatedUplinkPdusRlcReferenceCell.UlRabPsIb32

Source Section

FddCell

DedicatedUplinkPdusRlcReferenceCellUlRabPsIb384

Number of RLC PDUs sent on uplink for the reference cell. (UlRabPsIb384)

Data Source

RNC C-Node

Source Field

VS.DedicatedUplinkPdusRlcReferenceCell.UlRabPsIb384

Source Section

FddCell

DedicatedUplinkPdusRlcReferenceCellUlRabPsIb64

Number of RLC PDUs sent on uplink for the reference cell. (UlRabPsIb64)

Data Source

RNC C-Node

Source Field

VS.DedicatedUplinkPdusRlcReferenceCell.UlRabPsIb64

Source Section

FddCell

DedicatedUplinkPdusRlcReferenceCellUlRabPsIb8

Number of RLC PDUs sent on uplink for the reference cell. (UlRabPsIb8)

Data Source

RNC C-Node

Source Field

VS.DedicatedUplinkPdusRlcReferenceCell.UlRabPsIb8

Source Section

FddCell

DedicatedUplinkPdusRlcReferenceCellUlRabPsStr16

Number of RLC PDUs sent on uplink for the reference cell. (UlRabPsStr16)

Data Source

RNC C-Node

Source Field

VS.DedicatedUplinkPdusRlcReferenceCell.UlRabPsStr16

Source Section

FddCell

DedicatedUplinkPdusRlcReferenceCellUlRabPsStr64

Number of RLC PDUs sent on uplink for the reference cell. (UlRabPsStr64)

Data Source

RNC C-Node

Source Field

VS.DedicatedUplinkPdusRlcReferenceCell.UlRabPsStr64

Source Section

FddCell

DedicatedUplinkPdusRlcReferenceCellUlRabPsStrOther

Number of RLC PDUs sent on uplink for the reference cell. (UlRabPsStrOther)

Data Source

RNC C-Node

Source Field

VS.DedicatedUplinkPdusRlcReferenceCell.UlRabPsStrOther

Source Section

FddCell

DedicatedUplinkPdusRlcReferenceCellUlRabSRB

Number of RLC PDUs sent on uplink for the reference cell. (UlRabSRB)

Data Source

RNC C-Node

Source Field

VS.DedicatedUplinkPdusRlcReferenceCell.UlRabSRB

Source Section

FddCell

DedicatedUplinkSduRlcRefCellUlRabCsData64

Number of SDUs received on dedicated uplink RLCs (from RLC counter DCH_UL_SDU) (UlRabCsData64)

Data Source

RNC C-Node

Source Field

VS.DedicatedUplinkSduRlcRefCell.UlRabCsData64

Source Section

FddCell

DedicatedUplinkSduRlcRefCellUlRabCsSpeech

Number of SDUs received on dedicated uplink RLCs (from RLC counter DCH_UL_SDU) (UlRabCsSpeech)

Data Source

RNC C-Node

Source Field

VS.DedicatedUplinkSduRlcRefCell.UlRabCsSpeech

Source Section

FddCell

DedicatedUplinkSduRlcRefCellUlRabCsStr

Number of SDUs received on dedicated uplink RLCs (from RLC counter DCH_UL_SDU) (UlRabCsStr)

Data Source

RNC C-Node

Source Field

VS.DedicatedUplinkSduRlcRefCell.UlRabCsStr

Source Section

FddCell

DedicatedUplinkSduRlcRefCellUlRabHsupa

Number of SDUs received on dedicated uplink RLCs (from RLC counter DCH_UL_SDU) (UlRabHsupa)

Data Source

RNC C-Node

Source Field

VS.DedicatedUplinkSduRlcRefCell.UlRabHsupa

Source Section

FddCell

DedicatedUplinkSduRlcRefCellUlRabOther

Number of SDUs received on dedicated uplink RLCs (from RLC counter DCH_UL_SDU) (UlRabOther)

Data Source

RNC C-Node

Source Field

VS.DedicatedUplinkSduRlcRefCell.UlRabOther

Source Section

FddCell

DedicatedUplinkSduRlcRefCellUlRabPsIb128

Number of SDUs received on dedicated uplink RLCs (from RLC counter DCH_UL_SDU) (UlRabPsIb128)

Data Source

RNC C-Node

Source Field

VS.DedicatedUplinkSduRlcRefCell.UlRabPsIb128

Source Section

FddCell

DedicatedUplinkSduRlcRefCellUlRabPsIb16

Number of SDUs received on dedicated uplink RLCs (from RLC counter DCH_UL_SDU) (UlRabPsIb16)

Data Source

RNC C-Node

Source Field

VS.DedicatedUplinkSduRlcRefCell.UlRabPsIb16

Source Section

FddCell

DedicatedUplinkSduRlcRefCellUlRabPsIb32

Number of SDUs received on dedicated uplink RLCs (from RLC counter DCH_UL_SDU) (UlRabPsIb32)

Data Source

RNC C-Node

Source Field

VS.DedicatedUplinkSduRlcRefCell.UlRabPsIb32

Source Section

FddCell

DedicatedUplinkSduRlcRefCellUlRabPsIb384

Number of SDUs received on dedicated uplink RLCs (from RLC counter DCH_UL_SDU) (UlRabPsIb384)

Data Source

RNC C-Node

Source Field

VS.DedicatedUplinkSduRlcRefCell.UlRabPsIb384

Source Section

FddCell

DedicatedUplinkSduRlcRefCellUlRabPsIb64

Number of SDUs received on dedicated uplink RLCs (from RLC counter DCH_UL_SDU) (UlRabPsIb64)

Data Source

RNC C-Node

Source Field

VS.DedicatedUplinkSduRlcRefCell.UlRabPsIb64

Source Section

FddCell

DedicatedUplinkSduRlcRefCellUlRabPsIb8

Number of SDUs received on dedicated uplink RLCs (from RLC counter DCH_UL_SDU) (UlRabPsIb8)

Data Source

RNC C-Node

Source Field

VS.DedicatedUplinkSduRlcRefCell.UlRabPsIb8

Source Section

FddCell

DedicatedUplinkSduRlcRefCellUlRabPsStr16

Number of SDUs received on dedicated uplink RLCs (from RLC counter DCH_UL_SDU) (UlRabPsStr16)

Data Source

RNC C-Node

Source Field

VS.DedicatedUplinkSduRlcRefCell.UlRabPsStr16

Source Section

FddCell

DedicatedUplinkSduRlcRefCellUlRabPsStr64

Number of SDUs received on dedicated uplink RLCs (from RLC counter DCH_UL_SDU) (UlRabPsStr64)

Data Source

RNC C-Node

Source Field

VS.DedicatedUplinkSduRlcRefCell.UlRabPsStr64

Source Section

FddCell

DedicatedUplinkSduRlcRefCellUlRabPsStrOther

Number of SDUs received on dedicated uplink RLCs (from RLC counter DCH_UL_SDU) (UlRabPsStrOther)

Data Source

RNC C-Node

Source Field

VS.DedicatedUplinkSduRlcRefCell.UlRabPsStrOther

Source Section

FddCell

DedicatedUplinkSduRlcRefCellUlRabSRB

Number of SDUs received on dedicated uplink RLCs (from RLC counter DCH_UL_SDU) (UlRabSRB)

Data Source

RNC C-Node

Source Field

VS.DedicatedUplinkSduRlcRefCell.UlRabSRB

Source Section

FddCell

DistDlTtlPwrRatioPwrRt00To40pc

DL TX power ratio P/Pmax received from NBAP common measurement per cell. It details the number of common measurements, according to their respective ranges and during the reporting period (PwrRt00To40pc)

Data Source

RNC C-Node

Source Field

VS.DistDlTtlPwrRatio.PwrRt00To40pc

Source Section

FddCell

DistDlTtlPwrRatioPwrRt40To70pc

DL TX power ratio P/Pmax received from NBAP common measurement per cell. It details the number of common measurements, according to their respective ranges and during the reporting period (PwrRt40To70pc)

Data Source

RNC C-Node

Source Field

VS.DistDlTtlPwrRatio.PwrRt40To70pc

Source Section

FddCell

DistDlTtlPwrRatioPwrRt70To80pc

DL TX power ratio P/Pmax received from NBAP common measurement per cell. It details the number of common measurements, according to their respective ranges and during the reporting period (PwrRt70To80pc)

Data Source

RNC C-Node

Source Field

VS.DistDlTtlPwrRatio.PwrRt70To80pc

Source Section

FddCell

DistDlTtlPwrRatioPwrRt80To90pc

DL TX power ratio P/Pmax received from NBAP common measurement per cell. It details the number of common measurements, according to their respective ranges and during the reporting period (PwrRt80To90pc)

Data Source

RNC C-Node

Source Field

VS.DistDlTtlPwrRatio.PwrRt80To90pc

Source Section

FddCell

DistDlTtlPwrRatioPwrRt90To100pc

DL TX power ratio P/Pmax received from NBAP common measurement per cell. It details the number of common measurements, according to their respective ranges and during the reporting period (PwrRt90To100pc)

Data Source

RNC C-Node

Source Field

VS.DistDlTtlPwrRatio.PwrRt90To100pc

Source Section

FddCell

DistPropDelayPerRange15LeDelayLt18Chips

Distribution of propagation delays, as expressed in the 3GPP25.433 Nbap Rl Setup Request / Propagation Delay IE when present (15LeDelayLt18Chips)

Data Source

RNC C-Node

Source Field

VS.DistPropDelayPerRange.15LeDelayLt18Chips

Source Section

FddCell

DistPropDelayPerRange19LeDelayLe765Chips

Distribution of propagation delays, as expressed in the 3GPP25.433 Nbap Rl Setup Request / Propagation Delay IE when present (19LeDelayLe765Chips)

Data Source

RNC C-Node

Source Field

VS.DistPropDelayPerRange.19LeDelayLe765Chips

Source Section

FddCell

DistPropDelayPerRange9LeDelayLt15Chips

Distribution of propagation delays, as expressed in the 3GPP25.433 Nbap Rl Setup Request / Propagation Delay IE when present (9LeDelayLt15Chips)

Data Source

RNC C-Node

Source Field

VS.DistPropDelayPerRange.9LeDelayLt15Chips

Source Section

FddCell

DistPropDelayPerRangeDelayLt9Chips

Distribution of propagation delays, as expressed in the 3GPP25.433 Nbap Rl Setup Request / Propagation Delay IE when present (DelayLt9Chips)

Data Source

RNC C-Node

Source Field

VS.DistPropDelayPerRange.DelayLt9Chips

Source Section

FddCell

DistRssiDistRssiMeasLtN1050

Uplink RSSI received from NBAP common measurement per cell. It details the number of common measurements (here, UL RSSI level) according to their respective ranges and during the reporting period. (DistRssiMeasLtN1050)

Data Source

RNC C-Node

Source Field

VS.DistRssi.DistRssiMeasLtN1050

Source Section

FddCell

DistRssiDistRssiN1000LeMeasLtN970

Uplink RSSI received from NBAP common measurement per cell. It details the number of common measurements (here, UL RSSI level) according to their respective ranges and during the reporting period. (DistRssiN1000LeMeasLtN970)

Data Source

RNC C-Node

Source Field

VS.DistRssi.DistRssiN1000LeMeasLtN970

Source Section

FddCell

DistRssiDistRssiN1030LeMeasLtN1000

Uplink RSSI received from NBAP common measurement per cell. It details the number of common measurements (here, UL RSSI level) according to their respective ranges and during the reporting period. (DistRssiN1030LeMeasLtN1000)

Data Source

RNC C-Node

Source Field

VS.DistRssi.DistRssiN1030LeMeasLtN1000

Source Section

FddCell

DistRssiDistRssiN1050LeMeasLtN1030

Uplink RSSI received from NBAP common measurement per cell. It details the number of common measurements (here, UL RSSI level) according to their respective ranges and during the reporting period. (DistRssiN1050LeMeasLtN1030)

Data Source

RNC C-Node

Source Field

VS.DistRssi.DistRssiN1050LeMeasLtN1030

Source Section

FddCell

DistRssiDistRssiN970LeMeas

Uplink RSSI received from NBAP common measurement per cell. It details the number of common measurements (here, UL RSSI level) according to their respective ranges and during the reporting period. (DistRssiN970LeMeas)

Data Source

RNC C-Node

Source Field

VS.DistRssi.DistRssiN970LeMeas

Source Section

FddCell

DlAmrRtChg

Number of DL rate change in AMR calls (DlAmrRtChg)

Data Source

RNC C-Node

Source Field

VS.DlAmrRtChg

Source Section

FddCell

DlAmrWbFrmRtAmrWbRts12p65

Number of DL AMR WB frames by rate (AmrWbRts12p65)

Data Source

RNC C-Node

Source Field

VS.DlAmrWbFrmRt.AmrWbRts12p65

Source Section

FddCell

DlAmrWbFrmRtAmrWbRts6p60

Number of DL AMR WB frames by rate (AmrWbRts6p60)

Data Source

RNC C-Node

Source Field

VS.DlAmrWbFrmRt.AmrWbRts6p60

Source Section

FddCell

DlAmrWbFrmRtAmrWbRts8p85

Number of DL AMR WB frames by rate (AmrWbRts8p85)

Data Source

RNC C-Node

Source Field

VS.DlAmrWbFrmRt.AmrWbRts8p85

Source Section

FddCell

DlAmrWbFrmRtAmrWbRtsSid

Number of DL AMR WB frames by rate (AmrWbRtsSid)

Data Source

RNC C-Node

Source Field

VS.DlAmrWbFrmRt.AmrWbRtsSid

Source Section

FddCell

DlAmrWbRtChg

Number of DL rate change in AMR WB calls (DlAmrWbRtChg)

Data Source

RNC C-Node

Source Field

VS.DlAmrWbRtChg

Source Section

FddCell

DlAsConfIdAvgNbrEstablishedDlAsCnfCsDataAvg

indicates an average of the number of DlAsConfIds established per iRNC, based on time average over collection period (Avg)

Data Source

RNC C-Node

Source Field

VS.DlAsConfIdAvgNbrEstablished.DlAsCnfCsData.Avg

Source Section

FddCell

DlAsConfIdAvgNbrEstablishedDlAsCnfCsDataCum

indicates an average of the number of DlAsConfIds established per iRNC, based on time average over collection period (Cum)

Data Source

RNC C-Node

Source Field

VS.DlAsConfIdAvgNbrEstablished.DlAsCnfCsData.Cum

Source Section

FddCell

DlAsConfIdAvgNbrEstablishedDlAsCnfCsDataMax

indicates an average of the number of DlAsConfIds established per iRNC, based on time average over collection period (Max)

Data Source

RNC C-Node

Source Field

VS.DlAsConfIdAvgNbrEstablished.DlAsCnfCsData.Max

Source Section

FddCell

DlAsConfIdAvgNbrEstablishedDlAsCnfCsDataMin

indicates an average of the number of DlAsConfIds established per iRNC, based on time average over collection period (Min)

Data Source

RNC C-Node

Source Field

VS.DlAsConfIdAvgNbrEstablished.DlAsCnfCsData.Min

Source Section

FddCell

DlAsConfIdAvgNbrEstablishedDlAsCnfCsDataNbEvt

indicates an average of the number of DlAsConfIds established per iRNC, based on time average over collection period (NbEvt)

Data Source

RNC C-Node

Source Field

VS.DlAsConfIdAvgNbrEstablished.DlAsCnfCsData.NbEvt

Source Section

FddCell

DlAsConfIdAvgNbrEstablishedDlAsCnfCsSpeechNbLrAmrAvg

indicates an average of the number of DlAsConfIds established per iRNC, based on time average over collection period (Avg)

Data Source

RNC C-Node

Source Field

VS.DlAsConfIdAvgNbrEstablished.DlAsCnfCsSpeechNbLrAmr.Avg

Source Section

FddCell

DlAsConfIdAvgNbrEstablishedDlAsCnfCsSpeechNbLrAmrCum

indicates an average of the number of DlAsConfIds established per iRNC, based on time average over collection period (Cum)

Data Source

RNC C-Node

Source Field

VS.DlAsConfIdAvgNbrEstablished.DlAsCnfCsSpeechNbLrAmr.Cum

Source Section

FddCell

DlAsConfIdAvgNbrEstablishedDlAsCnfCsSpeechNbLrAmrMax

indicates an average of the number of DlAsConfIds established per iRNC, based on time average over collection period (Max)

Data Source

RNC C-Node

Source Field

VS.DlAsConfIdAvgNbrEstablished.DlAsCnfCsSpeechNbLrAmr.Max

Source Section

FddCell

DlAsConfIdAvgNbrEstablishedDlAsCnfCsSpeechNbLrAmrMin

indicates an average of the number of DlAsConfIds established per iRNC, based on time average over collection period (Min)

Data Source

RNC C-Node

Source Field

VS.DlAsConfIdAvgNbrEstablished.DlAsCnfCsSpeechNbLrAmr.Min

Source Section

FddCell

DlAsConfIdAvgNbrEstablishedDlAsCnfCsSpeechNbLrAmrNbEvt

indicates an average of the number of DlAsConfIds established per iRNC, based on time average over collection period (NbEvt)

Data Source

RNC C-Node

Source Field

VS.DlAsConfIdAvgNbrEstablished.DlAsCnfCsSpeechNbLrAmr.NbEvt

Source Section

FddCell

DlAsConfIdAvgNbrEstablishedDlAsCnfCsSpeechWbAmrAvg

indicates an average of the number of DlAsConfIds established per iRNC, based on time average over collection period (Avg)

Data Source

RNC C-Node

Source Field

VS.DlAsConfIdAvgNbrEstablished.DlAsCnfCsSpeechWbAmr.Avg

Source Section

FddCell

DlAsConfIdAvgNbrEstablishedDlAsCnfCsSpeechWbAmrCum

indicates an average of the number of DlAsConfIds established per iRNC, based on time average over collection period (Cum)

Data Source

RNC C-Node

Source Field

VS.DlAsConfIdAvgNbrEstablished.DlAsCnfCsSpeechWbAmr.Cum

Source Section

FddCell

DlAsConfIdAvgNbrEstablishedDlAsCnfCsSpeechWbAmrMax

indicates an average of the number of DlAsConfIds established per iRNC, based on time average over collection period (Max)

Data Source

RNC C-Node

Source Field

VS.DlAsConfIdAvgNbrEstablished.DlAsCnfCsSpeechWbAmr.Max

Source Section

FddCell

DlAsConfIdAvgNbrEstablishedDlAsCnfCsSpeechWbAmrMin

indicates an average of the number of DlAsConfIds established per iRNC, based on time average over collection period (Min)

Data Source

RNC C-Node

Source Field

VS.DlAsConfIdAvgNbrEstablished.DlAsCnfCsSpeechWbAmr.Min

Source Section

FddCell

DlAsConfIdAvgNbrEstablishedDlAsCnfCsSpeechWbAmrNbEvt

indicates an average of the number of DlAsConfIds established per iRNC, based on time average over collection period (NbEvt)

Data Source

RNC C-Node

Source Field

VS.DlAsConfIdAvgNbrEstablished.DlAsCnfCsSpeechWbAmr.NbEvt

Source Section

FddCell

DlAsConfIdAvgNbrEstablishedDlAsCnfCsStr144Avg

indicates an average of the number of DlAsConfIds established per iRNC, based on time average over collection period (Avg)

Data Source

RNC C-Node

Source Field

VS.DlAsConfIdAvgNbrEstablished.DlAsCnfCsStr144.Avg

Source Section

FddCell

DlAsConfIdAvgNbrEstablishedDlAsCnfCsStr144Cum

indicates an average of the number of DlAsConfIds established per iRNC, based on time average over collection period (Cum)

Data Source

RNC C-Node

Source Field

VS.DlAsConfIdAvgNbrEstablished.DlAsCnfCsStr144.Cum

Source Section

FddCell

DlAsConfIdAvgNbrEstablishedDlAsCnfCsStr144Max

indicates an average of the number of DlAsConfIds established per iRNC, based on time average over collection period (Max)

Data Source

RNC C-Node

Source Field

VS.DlAsConfIdAvgNbrEstablished.DlAsCnfCsStr144.Max

Source Section

FddCell

DlAsConfIdAvgNbrEstablishedDlAsCnfCsStr144Min

indicates an average of the number of DlAsConfIds established per iRNC, based on time average over collection period (Min)

Data Source

RNC C-Node

Source Field

VS.DlAsConfIdAvgNbrEstablished.DlAsCnfCsStr144.Min

Source Section

FddCell

DlAsConfIdAvgNbrEstablishedDlAsCnfCsStr144NbEvt

indicates an average of the number of DlAsConfIds established per iRNC, based on time average over collection period (NbEvt)

Data Source

RNC C-Node

Source Field

VS.DlAsConfIdAvgNbrEstablished.DlAsCnfCsStr144.NbEvt

Source Section

FddCell

DlAsConfIdAvgNbrEstablishedDlAsCnfCsStr576Avg

indicates an average of the number of DlAsConfIds established per iRNC, based on time average over collection period (Avg)

Data Source

RNC C-Node

Source Field

VS.DlAsConfIdAvgNbrEstablished.DlAsCnfCsStr576.Avg

Source Section

FddCell

DlAsConfIdAvgNbrEstablishedDlAsCnfCsStr576Cum

indicates an average of the number of DlAsConfIds established per iRNC, based on time average over collection period (Cum)

Data Source

RNC C-Node

Source Field

VS.DlAsConfIdAvgNbrEstablished.DlAsCnfCsStr576.Cum

Source Section

FddCell

DlAsConfIdAvgNbrEstablishedDlAsCnfCsStr576Max

indicates an average of the number of DlAsConfIds established per iRNC, based on time average over collection period (Max)

Data Source

RNC C-Node

Source Field

VS.DlAsConfIdAvgNbrEstablished.DlAsCnfCsStr576.Max

Source Section

FddCell

DlAsConfIdAvgNbrEstablishedDlAsCnfCsStr576Min

indicates an average of the number of DlAsConfIds established per iRNC, based on time average over collection period (Min)

Data Source

RNC C-Node

Source Field

VS.DlAsConfIdAvgNbrEstablished.DlAsCnfCsStr576.Min

Source Section

FddCell

DlAsConfIdAvgNbrEstablishedDlAsCnfCsStr576NbEvt

indicates an average of the number of DlAsConfIds established per iRNC, based on time average over collection period (NbEvt)

Data Source

RNC C-Node

Source Field

VS.DlAsConfIdAvgNbrEstablished.DlAsCnfCsStr576.NbEvt

Source Section

FddCell

DlAsConfIdAvgNbrEstablishedDlAsCnfHsdpaAvg

indicates an average of the number of DlAsConfIds established per iRNC, based on time average over collection period (Avg)

Data Source

RNC C-Node

Source Field

VS.DlAsConfIdAvgNbrEstablished.DlAsCnfHsdpa.Avg

Source Section

FddCell

DlAsConfIdAvgNbrEstablishedDlAsCnfHsdpaCum

indicates an average of the number of DlAsConfIds established per iRNC, based on time average over collection period (Cum)

Data Source

RNC C-Node

Source Field

VS.DlAsConfIdAvgNbrEstablished.DlAsCnfHsdpa.Cum

Source Section

FddCell

DlAsConfIdAvgNbrEstablishedDlAsCnfHsdpaMax

indicates an average of the number of DlAsConfIds established per iRNC, based on time average over collection period (Max)

Data Source

RNC C-Node

Source Field

VS.DlAsConfIdAvgNbrEstablished.DlAsCnfHsdpa.Max

Source Section

FddCell

DlAsConfIdAvgNbrEstablishedDlAsCnfHsdpaMin

indicates an average of the number of DlAsConfIds established per iRNC, based on time average over collection period (Min)

Data Source

RNC C-Node

Source Field

VS.DlAsConfIdAvgNbrEstablished.DlAsCnfHsdpa.Min

Source Section

FddCell

DlAsConfIdAvgNbrEstablishedDlAsCnfHsdpaNbEvt

indicates an average of the number of DlAsConfIds established per iRNC, based on time average over collection period (NbEvt)

Data Source

RNC C-Node

Source Field

VS.DlAsConfIdAvgNbrEstablished.DlAsCnfHsdpa.NbEvt

Source Section

FddCell

DlAsConfIdAvgNbrEstablishedDlAsCnfOtherAvg

indicates an average of the number of DlAsConfIds established per iRNC, based on time average over collection period (Avg)

Data Source

RNC C-Node

Source Field

VS.DlAsConfIdAvgNbrEstablished.DlAsCnfOther.Avg

Source Section

FddCell

DlAsConfIdAvgNbrEstablishedDlAsCnfOtherCum

indicates an average of the number of DlAsConfIds established per iRNC, based on time average over collection period (Cum)

Data Source

RNC C-Node

Source Field

VS.DlAsConfIdAvgNbrEstablished.DlAsCnfOther.Cum

Source Section

FddCell

DlAsConfIdAvgNbrEstablishedDlAsCnfOtherMax

indicates an average of the number of DlAsConfIds established per iRNC, based on time average over collection period (Max)

Data Source

RNC C-Node

Source Field

VS.DlAsConfIdAvgNbrEstablished.DlAsCnfOther.Max

Source Section

FddCell

DlAsConfIdAvgNbrEstablishedDlAsCnfOtherMin

indicates an average of the number of DlAsConfIds established per iRNC, based on time average over collection period (Min)

Data Source

RNC C-Node

Source Field

VS.DlAsConfIdAvgNbrEstablished.DlAsCnfOther.Min

Source Section

FddCell

DlAsConfIdAvgNbrEstablishedDlAsCnfOtherNbEvt

indicates an average of the number of DlAsConfIds established per iRNC, based on time average over collection period (NbEvt)

Data Source

RNC C-Node

Source Field

VS.DlAsConfIdAvgNbrEstablished.DlAsCnfOther.NbEvt

Source Section

FddCell

DlAsConfIdAvgNbrEstablishedDlAsCnfPsIB0Avg

indicates an average of the number of DlAsConfIds established per iRNC, based on time average over collection period (Avg)

Data Source

RNC C-Node

Source Field

VS.DlAsConfIdAvgNbrEstablished.DlAsCnfPsIB0.Avg

Source Section

FddCell

DlAsConfIdAvgNbrEstablishedDlAsCnfPsIB0Cum

indicates an average of the number of DlAsConfIds established per iRNC, based on time average over collection period (Cum)

Data Source

RNC C-Node

Source Field

VS.DlAsConfIdAvgNbrEstablished.DlAsCnfPsIB0.Cum

Source Section

FddCell

DlAsConfIdAvgNbrEstablishedDlAsCnfPsIB0Max

indicates an average of the number of DlAsConfIds established per iRNC, based on time average over collection period (Max)

Data Source

RNC C-Node

Source Field

VS.DlAsConfIdAvgNbrEstablished.DlAsCnfPsIB0.Max

Source Section

FddCell

DlAsConfIdAvgNbrEstablishedDlAsCnfPsIB0Min

indicates an average of the number of DlAsConfIds established per iRNC, based on time average over collection period (Min)

Data Source

RNC C-Node

Source Field

VS.DlAsConfIdAvgNbrEstablished.DlAsCnfPsIB0.Min

Source Section

FddCell

DlAsConfIdAvgNbrEstablishedDlAsCnfPsIB0NbEvt

indicates an average of the number of DlAsConfIds established per iRNC, based on time average over collection period (NbEvt)

Data Source

RNC C-Node

Source Field

VS.DlAsConfIdAvgNbrEstablished.DlAsCnfPsIB0.NbEvt

Source Section

FddCell

DlAsConfIdAvgNbrEstablishedDlAsCnfPsIB128Avg

indicates an average of the number of DlAsConfIds established per iRNC, based on time average over collection period (Avg)

Data Source

RNC C-Node

Source Field

VS.DlAsConfIdAvgNbrEstablished.DlAsCnfPsIB128.Avg

Source Section

FddCell

DlAsConfIdAvgNbrEstablishedDlAsCnfPsIB128Cum

indicates an average of the number of DlAsConfIds established per iRNC, based on time average over collection period (Cum)

Data Source

RNC C-Node

Source Field

VS.DlAsConfIdAvgNbrEstablished.DlAsCnfPsIB128.Cum

Source Section

FddCell

DlAsConfIdAvgNbrEstablishedDlAsCnfPsIB128Max

indicates an average of the number of DlAsConfIds established per iRNC, based on time average over collection period (Max)

Data Source

RNC C-Node

Source Field

VS.DlAsConfIdAvgNbrEstablished.DlAsCnfPsIB128.Max

Source Section

FddCell

DlAsConfIdAvgNbrEstablishedDlAsCnfPsIB128Min

indicates an average of the number of DlAsConfIds established per iRNC, based on time average over collection period (Min)

Data Source

RNC C-Node

Source Field

VS.DlAsConfIdAvgNbrEstablished.DlAsCnfPsIB128.Min

Source Section

FddCell

DlAsConfIdAvgNbrEstablishedDlAsCnfPsIB128NbEvt

indicates an average of the number of DlAsConfIds established per iRNC, based on time average over collection period (NbEvt)

Data Source

RNC C-Node

Source Field

VS.DlAsConfIdAvgNbrEstablished.DlAsCnfPsIB128.NbEvt

Source Section

FddCell

DlAsConfIdAvgNbrEstablishedDlAsCnfPsIB16Avg

indicates an average of the number of DlAsConfIds established per iRNC, based on time average over collection period (Avg)

Data Source

RNC C-Node

Source Field

VS.DlAsConfIdAvgNbrEstablished.DlAsCnfPsIB16.Avg

Source Section

FddCell

DlAsConfIdAvgNbrEstablishedDlAsCnfPsIB16Cum

indicates an average of the number of DlAsConfIds established per iRNC, based on time average over collection period (Cum)

Data Source

RNC C-Node

Source Field

VS.DlAsConfIdAvgNbrEstablished.DlAsCnfPsIB16.Cum

Source Section

FddCell

DlAsConfIdAvgNbrEstablishedDlAsCnfPsIB16Max

indicates an average of the number of DlAsConfIds established per iRNC, based on time average over collection period (Max)

Data Source

RNC C-Node

Source Field

VS.DlAsConfIdAvgNbrEstablished.DlAsCnfPsIB16.Max

Source Section

FddCell

DlAsConfIdAvgNbrEstablishedDlAsCnfPsIB16Min

indicates an average of the number of DlAsConfIds established per iRNC, based on time average over collection period (Min)

Data Source

RNC C-Node

Source Field

VS.DlAsConfIdAvgNbrEstablished.DlAsCnfPsIB16.Min

Source Section

FddCell

DlAsConfIdAvgNbrEstablishedDlAsCnfPsIB16NbEvt

indicates an average of the number of DlAsConfIds established per iRNC, based on time average over collection period (NbEvt)

Data Source

RNC C-Node

Source Field

VS.DlAsConfIdAvgNbrEstablished.DlAsCnfPsIB16.NbEvt

Source Section

FddCell

DlAsConfIdAvgNbrEstablishedDlAsCnfPsIB256Avg

indicates an average of the number of DlAsConfIds established per iRNC, based on time average over collection period (Avg)

Data Source

RNC C-Node

Source Field

VS.DlAsConfIdAvgNbrEstablished.DlAsCnfPsIB256.Avg

Source Section

FddCell

DlAsConfIdAvgNbrEstablishedDlAsCnfPsIB256Cum

indicates an average of the number of DlAsConfIds established per iRNC, based on time average over collection period (Cum)

Data Source

RNC C-Node

Source Field

VS.DlAsConfIdAvgNbrEstablished.DlAsCnfPsIB256.Cum

Source Section

FddCell

DlAsConfIdAvgNbrEstablishedDlAsCnfPsIB256Max

indicates an average of the number of DlAsConfIds established per iRNC, based on time average over collection period (Max)

Data Source

RNC C-Node

Source Field

VS.DlAsConfIdAvgNbrEstablished.DlAsCnfPsIB256.Max

Source Section

FddCell

DlAsConfIdAvgNbrEstablishedDlAsCnfPsIB256Min

indicates an average of the number of DlAsConfIds established per iRNC, based on time average over collection period (Min)

Data Source

RNC C-Node

Source Field

VS.DlAsConfIdAvgNbrEstablished.DlAsCnfPsIB256.Min

Source Section

FddCell

DlAsConfIdAvgNbrEstablishedDlAsCnfPsIB256NbEvt

indicates an average of the number of DlAsConfIds established per iRNC, based on time average over collection period (NbEvt)

Data Source

RNC C-Node

Source Field

VS.DlAsConfIdAvgNbrEstablished.DlAsCnfPsIB256.NbEvt

Source Section

FddCell

DlAsConfIdAvgNbrEstablishedDlAsCnfPsIB32Avg

indicates an average of the number of DlAsConfIds established per iRNC, based on time average over collection period (Avg)

Data Source

RNC C-Node

Source Field

VS.DlAsConfIdAvgNbrEstablished.DlAsCnfPsIB32.Avg

Source Section

FddCell

DlAsConfIdAvgNbrEstablishedDlAsCnfPsIB32Cum

indicates an average of the number of DlAsConfIds established per iRNC, based on time average over collection period (Cum)

Data Source

RNC C-Node

Source Field

VS.DlAsConfIdAvgNbrEstablished.DlAsCnfPsIB32.Cum

Source Section

FddCell

DlAsConfIdAvgNbrEstablishedDlAsCnfPsIB32Max

indicates an average of the number of DlAsConfIds established per iRNC, based on time average over collection period (Max)

Data Source

RNC C-Node

Source Field

VS.DlAsConfIdAvgNbrEstablished.DlAsCnfPsIB32.Max

Source Section

FddCell

DlAsConfIdAvgNbrEstablishedDlAsCnfPsIB32Min

indicates an average of the number of DlAsConfIds established per iRNC, based on time average over collection period (Min)

Data Source

RNC C-Node

Source Field

VS.DlAsConfIdAvgNbrEstablished.DlAsCnfPsIB32.Min

Source Section

FddCell

DlAsConfIdAvgNbrEstablishedDlAsCnfPsIB32NbEvt

indicates an average of the number of DlAsConfIds established per iRNC, based on time average over collection period (NbEvt)

Data Source

RNC C-Node

Source Field

VS.DlAsConfIdAvgNbrEstablished.DlAsCnfPsIB32.NbEvt

Source Section

FddCell

DlAsConfIdAvgNbrEstablishedDlAsCnfPsIB384Avg

indicates an average of the number of DlAsConfIds established per iRNC, based on time average over collection period (Avg)

Data Source

RNC C-Node

Source Field

VS.DlAsConfIdAvgNbrEstablished.DlAsCnfPsIB384.Avg

Source Section

FddCell

DlAsConfIdAvgNbrEstablishedDlAsCnfPsIB384Cum

indicates an average of the number of DlAsConfIds established per iRNC, based on time average over collection period (Cum)

Data Source

RNC C-Node

Source Field

VS.DlAsConfIdAvgNbrEstablished.DlAsCnfPsIB384.Cum

Source Section

FddCell

DlAsConfIdAvgNbrEstablishedDlAsCnfPsIB384Max

indicates an average of the number of DlAsConfIds established per iRNC, based on time average over collection period (Max)

Data Source

RNC C-Node

Source Field

VS.DlAsConfIdAvgNbrEstablished.DlAsCnfPsIB384.Max

Source Section

FddCell

DlAsConfIdAvgNbrEstablishedDlAsCnfPsIB384Min

indicates an average of the number of DlAsConfIds established per iRNC, based on time average over collection period (Min)

Data Source

RNC C-Node

Source Field

VS.DlAsConfIdAvgNbrEstablished.DlAsCnfPsIB384.Min

Source Section

FddCell

DlAsConfIdAvgNbrEstablishedDlAsCnfPsIB384NbEvt

indicates an average of the number of DlAsConfIds established per iRNC, based on time average over collection period (NbEvt)

Data Source

RNC C-Node

Source Field

VS.DlAsConfIdAvgNbrEstablished.DlAsCnfPsIB384.NbEvt

Source Section

FddCell

DlAsConfIdAvgNbrEstablishedDlAsCnfPsIB64Avg

indicates an average of the number of DlAsConfIds established per iRNC, based on time average over collection period (Avg)

Data Source

RNC C-Node

Source Field

VS.DlAsConfIdAvgNbrEstablished.DlAsCnfPsIB64.Avg

Source Section

FddCell

DlAsConfIdAvgNbrEstablishedDlAsCnfPsIB64Cum

indicates an average of the number of DlAsConfIds established per iRNC, based on time average over collection period (Cum)

Data Source

RNC C-Node

Source Field

VS.DlAsConfIdAvgNbrEstablished.DlAsCnfPsIB64.Cum

Source Section

FddCell

DlAsConfIdAvgNbrEstablishedDlAsCnfPsIB64Max

indicates an average of the number of DlAsConfIds established per iRNC, based on time average over collection period (Max)

Data Source

RNC C-Node

Source Field

VS.DlAsConfIdAvgNbrEstablished.DlAsCnfPsIB64.Max

Source Section

FddCell

DlAsConfIdAvgNbrEstablishedDlAsCnfPsIB64Min

indicates an average of the number of DlAsConfIds established per iRNC, based on time average over collection period (Min)

Data Source

RNC C-Node

Source Field

VS.DlAsConfIdAvgNbrEstablished.DlAsCnfPsIB64.Min

Source Section

FddCell

DlAsConfIdAvgNbrEstablishedDlAsCnfPsIB64NbEvt

indicates an average of the number of DlAsConfIds established per iRNC, based on time average over collection period (NbEvt)

Data Source

RNC C-Node

Source Field

VS.DlAsConfIdAvgNbrEstablished.DlAsCnfPsIB64.NbEvt

Source Section

FddCell

DlAsConfIdAvgNbrEstablishedDlAsCnfPsIB8Avg

indicates an average of the number of DlAsConfIds established per iRNC, based on time average over collection period (Avg)

Data Source

RNC C-Node

Source Field

VS.DlAsConfIdAvgNbrEstablished.DlAsCnfPsIB8.Avg

Source Section

FddCell

DlAsConfIdAvgNbrEstablishedDlAsCnfPsIB8Cum

indicates an average of the number of DlAsConfIds established per iRNC, based on time average over collection period (Cum)

Data Source

RNC C-Node

Source Field

VS.DlAsConfIdAvgNbrEstablished.DlAsCnfPsIB8.Cum

Source Section

FddCell

DlAsConfIdAvgNbrEstablishedDlAsCnfPsIB8Max

indicates an average of the number of DlAsConfIds established per iRNC, based on time average over collection period (Max)

Data Source

RNC C-Node

Source Field

VS.DlAsConfIdAvgNbrEstablished.DlAsCnfPsIB8.Max

Source Section

FddCell

DlAsConfIdAvgNbrEstablishedDlAsCnfPsIB8Min

indicates an average of the number of DlAsConfIds established per iRNC, based on time average over collection period (Min)

Data Source

RNC C-Node

Source Field

VS.DlAsConfIdAvgNbrEstablished.DlAsCnfPsIB8.Min

Source Section

FddCell

DlAsConfIdAvgNbrEstablishedDlAsCnfPsIB8NbEvt

indicates an average of the number of DlAsConfIds established per iRNC, based on time average over collection period (NbEvt)

Data Source

RNC C-Node

Source Field

VS.DlAsConfIdAvgNbrEstablished.DlAsCnfPsIB8.NbEvt

Source Section

FddCell

DlAsConfIdAvgNbrEstablishedDlAsCnfPsStr128Avg

indicates an average of the number of DlAsConfIds established per iRNC, based on time average over collection period (Avg)

Data Source

RNC C-Node

Source Field

VS.DlAsConfIdAvgNbrEstablished.DlAsCnfPsStr128.Avg

Source Section

FddCell

DlAsConfIdAvgNbrEstablishedDlAsCnfPsStr128Cum

indicates an average of the number of DlAsConfIds established per iRNC, based on time average over collection period (Cum)

Data Source

RNC C-Node

Source Field

VS.DlAsConfIdAvgNbrEstablished.DlAsCnfPsStr128.Cum

Source Section

FddCell

DlAsConfIdAvgNbrEstablishedDlAsCnfPsStr128Max

indicates an average of the number of DlAsConfIds established per iRNC, based on time average over collection period (Max)

Data Source

RNC C-Node

Source Field

VS.DlAsConfIdAvgNbrEstablished.DlAsCnfPsStr128.Max

Source Section

FddCell

DlAsConfIdAvgNbrEstablishedDlAsCnfPsStr128Min

indicates an average of the number of DlAsConfIds established per iRNC, based on time average over collection period (Min)

Data Source

RNC C-Node

Source Field

VS.DlAsConfIdAvgNbrEstablished.DlAsCnfPsStr128.Min

Source Section

FddCell

DlAsConfIdAvgNbrEstablishedDlAsCnfPsStr128NbEvt

indicates an average of the number of DlAsConfIds established per iRNC, based on time average over collection period (NbEvt)

Data Source

RNC C-Node

Source Field

VS.DlAsConfIdAvgNbrEstablished.DlAsCnfPsStr128.NbEvt

Source Section

FddCell

DlAsConfIdAvgNbrEstablishedDlAsCnfPsStr16Avg

indicates an average of the number of DlAsConfIds established per iRNC, based on time average over collection period (Avg)

Data Source

RNC C-Node

Source Field

VS.DlAsConfIdAvgNbrEstablished.DlAsCnfPsStr16.Avg

Source Section

FddCell

DlAsConfIdAvgNbrEstablishedDlAsCnfPsStr16Cum

indicates an average of the number of DlAsConfIds established per iRNC, based on time average over collection period (Cum)

Data Source

RNC C-Node

Source Field

VS.DlAsConfIdAvgNbrEstablished.DlAsCnfPsStr16.Cum

Source Section

FddCell

DlAsConfIdAvgNbrEstablishedDlAsCnfPsStr16Max

indicates an average of the number of DlAsConfIds established per iRNC, based on time average over collection period (Max)

Data Source

RNC C-Node

Source Field

VS.DlAsConfIdAvgNbrEstablished.DlAsCnfPsStr16.Max

Source Section

FddCell

DlAsConfIdAvgNbrEstablishedDlAsCnfPsStr16Min

indicates an average of the number of DlAsConfIds established per iRNC, based on time average over collection period (Min)

Data Source

RNC C-Node

Source Field

VS.DlAsConfIdAvgNbrEstablished.DlAsCnfPsStr16.Min

Source Section

FddCell

DlAsConfIdAvgNbrEstablishedDlAsCnfPsStr16NbEvt

indicates an average of the number of DlAsConfIds established per iRNC, based on time average over collection period (NbEvt)

Data Source

RNC C-Node

Source Field

VS.DlAsConfIdAvgNbrEstablished.DlAsCnfPsStr16.NbEvt

Source Section

FddCell

DlAsConfIdAvgNbrEstablishedDlAsCnfPsStr256Avg

indicates an average of the number of DlAsConfIds established per iRNC, based on time average over collection period (Avg)

Data Source

RNC C-Node

Source Field

VS.DlAsConfIdAvgNbrEstablished.DlAsCnfPsStr256.Avg

Source Section

FddCell

DlAsConfIdAvgNbrEstablishedDlAsCnfPsStr256Cum

indicates an average of the number of DlAsConfIds established per iRNC, based on time average over collection period (Cum)

Data Source

RNC C-Node

Source Field

VS.DlAsConfIdAvgNbrEstablished.DlAsCnfPsStr256.Cum

Source Section

FddCell

DlAsConfIdAvgNbrEstablishedDlAsCnfPsStr256Max

indicates an average of the number of DlAsConfIds established per iRNC, based on time average over collection period (Max)

Data Source

RNC C-Node

Source Field

VS.DlAsConfIdAvgNbrEstablished.DlAsCnfPsStr256.Max

Source Section

FddCell

DlAsConfIdAvgNbrEstablishedDlAsCnfPsStr256Min

indicates an average of the number of DlAsConfIds established per iRNC, based on time average over collection period (Min)

Data Source

RNC C-Node

Source Field

VS.DlAsConfIdAvgNbrEstablished.DlAsCnfPsStr256.Min

Source Section

FddCell

DlAsConfIdAvgNbrEstablishedDlAsCnfPsStr256NbEvt

indicates an average of the number of DlAsConfIds established per iRNC, based on time average over collection period (NbEvt)

Data Source

RNC C-Node

Source Field

VS.DlAsConfIdAvgNbrEstablished.DlAsCnfPsStr256.NbEvt

Source Section

FddCell

DlAsConfIdAvgNbrEstablishedDlAsCnfPsStr384Avg

indicates an average of the number of DlAsConfIds established per iRNC, based on time average over collection period (Avg)

Data Source

RNC C-Node

Source Field

VS.DlAsConfIdAvgNbrEstablished.DlAsCnfPsStr384.Avg

Source Section

FddCell

DlAsConfIdAvgNbrEstablishedDlAsCnfPsStr384Cum

indicates an average of the number of DlAsConfIds established per iRNC, based on time average over collection period (Cum)

Data Source

RNC C-Node

Source Field

VS.DlAsConfIdAvgNbrEstablished.DlAsCnfPsStr384.Cum

Source Section

FddCell

DlAsConfIdAvgNbrEstablishedDlAsCnfPsStr384Max

indicates an average of the number of DlAsConfIds established per iRNC, based on time average over collection period (Max)

Data Source

RNC C-Node

Source Field

VS.DlAsConfIdAvgNbrEstablished.DlAsCnfPsStr384.Max

Source Section

FddCell

DlAsConfIdAvgNbrEstablishedDlAsCnfPsStr384Min

indicates an average of the number of DlAsConfIds established per iRNC, based on time average over collection period (Min)

Data Source

RNC C-Node

Source Field

VS.DlAsConfIdAvgNbrEstablished.DlAsCnfPsStr384.Min

Source Section

FddCell

DlAsConfIdAvgNbrEstablishedDlAsCnfPsStr384NbEvt

indicates an average of the number of DlAsConfIds established per iRNC, based on time average over collection period (NbEvt)

Data Source

RNC C-Node

Source Field

VS.DlAsConfIdAvgNbrEstablished.DlAsCnfPsStr384.NbEvt

Source Section

FddCell

DlAsConfIdAvgNbrEstablishedDlAsCnfPsStr64Avg

indicates an average of the number of DlAsConfIds established per iRNC, based on time average over collection period (Avg)

Data Source

RNC C-Node

Source Field

VS.DlAsConfIdAvgNbrEstablished.DlAsCnfPsStr64.Avg

Source Section

FddCell

DlAsConfIdAvgNbrEstablishedDlAsCnfPsStr64Cum

indicates an average of the number of DlAsConfIds established per iRNC, based on time average over collection period (Cum)

Data Source

RNC C-Node

Source Field

VS.DlAsConfIdAvgNbrEstablished.DlAsCnfPsStr64.Cum

Source Section

FddCell

DlAsConfIdAvgNbrEstablishedDlAsCnfPsStr64Max

indicates an average of the number of DlAsConfIds established per iRNC, based on time average over collection period (Max)

Data Source

RNC C-Node

Source Field

VS.DlAsConfIdAvgNbrEstablished.DlAsCnfPsStr64.Max

Source Section

FddCell

DlAsConfIdAvgNbrEstablishedDlAsCnfPsStr64Min

indicates an average of the number of DlAsConfIds established per iRNC, based on time average over collection period (Min)

Data Source

RNC C-Node

Source Field

VS.DlAsConfIdAvgNbrEstablished.DlAsCnfPsStr64.Min

Source Section

FddCell

DlAsConfIdAvgNbrEstablishedDlAsCnfPsStr64NbEvt

indicates an average of the number of DlAsConfIds established per iRNC, based on time average over collection period (NbEvt)

Data Source

RNC C-Node

Source Field

VS.DlAsConfIdAvgNbrEstablished.DlAsCnfPsStr64.NbEvt

Source Section

FddCell

DlAsConfIdAvgNbrEstablishedDlAsCnfSignallingAvg

indicates an average of the number of DlAsConfIds established per iRNC, based on time average over collection period (Avg)

Data Source

RNC C-Node

Source Field

VS.DlAsConfIdAvgNbrEstablished.DlAsCnfSignalling.Avg

Source Section

FddCell

DlAsConfIdAvgNbrEstablishedDlAsCnfSignallingCum

indicates an average of the number of DlAsConfIds established per iRNC, based on time average over collection period (Cum)

Data Source

RNC C-Node

Source Field

VS.DlAsConfIdAvgNbrEstablished.DlAsCnfSignalling.Cum

Source Section

FddCell

DlAsConfIdAvgNbrEstablishedDlAsCnfSignallingMax

indicates an average of the number of DlAsConfIds established per iRNC, based on time average over collection period (Max)

Data Source

RNC C-Node

Source Field

VS.DlAsConfIdAvgNbrEstablished.DlAsCnfSignalling.Max

Source Section

FddCell

DlAsConfIdAvgNbrEstablishedDlAsCnfSignallingMin

indicates an average of the number of DlAsConfIds established per iRNC, based on time average over collection period (Min)

Data Source

RNC C-Node

Source Field

VS.DlAsConfIdAvgNbrEstablished.DlAsCnfSignalling.Min

Source Section

FddCell

DlAsConfIdAvgNbrEstablishedDlAsCnfSignallingNbEvt

indicates an average of the number of DlAsConfIds established per iRNC, based on time average over collection period (NbEvt)

Data Source

RNC C-Node

Source Field

VS.DlAsConfIdAvgNbrEstablished.DlAsCnfSignalling.NbEvt

Source Section

FddCell

DlAsConfIdAvgNbrEstablishedDlAsCnfTrbCellFachAvg

indicates an average of the number of DlAsConfIds established per iRNC, based on time average over collection period (Avg)

Data Source

RNC C-Node

Source Field

VS.DlAsConfIdAvgNbrEstablished.DlAsCnfTrbCellFach.Avg

Source Section

FddCell

DlAsConfIdAvgNbrEstablishedDlAsCnfTrbCellFachCum

indicates an average of the number of DlAsConfIds established per iRNC, based on time average over collection period (Cum)

Data Source

RNC C-Node

Source Field

VS.DlAsConfIdAvgNbrEstablished.DlAsCnfTrbCellFach.Cum

Source Section

FddCell

DlAsConfIdAvgNbrEstablishedDlAsCnfTrbCellFachMax

indicates an average of the number of DlAsConfIds established per iRNC, based on time average over collection period (Max)

Data Source

RNC C-Node

Source Field

VS.DlAsConfIdAvgNbrEstablished.DlAsCnfTrbCellFach.Max

Source Section

FddCell

DlAsConfIdAvgNbrEstablishedDlAsCnfTrbCellFachMin

indicates an average of the number of DlAsConfIds established per iRNC, based on time average over collection period (Min)

Data Source

RNC C-Node

Source Field

VS.DlAsConfIdAvgNbrEstablished.DlAsCnfTrbCellFach.Min

Source Section

FddCell

DlAsConfIdAvgNbrEstablishedDlAsCnfTrbCellFachNbEvt

indicates an average of the number of DlAsConfIds established per iRNC, based on time average over collection period (NbEvt)

Data Source

RNC C-Node

Source Field

VS.DlAsConfIdAvgNbrEstablished.DlAsCnfTrbCellFach.NbEvt

Source Section

FddCell

DlTtlPwrHsdpaGbrOnly00LeRatioLt20

Ratio between the DL total power reserved for GBR on HSDPA users (according to the reported NBAP common meas 'HS-DSCH Req power' from NodeB) and Pmax. (00LeRatioLt20)

Data Source

RNC C-Node

Source Field

VS.DlTtlPwrHsdpaGbrOnly.00LeRatioLt20

Source Section

FddCell

DlTtlPwrHsdpaGbrOnly20LeRatioLt40

Ratio between the DL total power reserved for GBR on HSDPA users (according to the reported NBAP common meas 'HS-DSCH Req power' from NodeB) and Pmax. (20LeRatioLt40)

Data Source

RNC C-Node

Source Field

VS.DlTtlPwrHsdpaGbrOnly.20LeRatioLt40

Source Section

FddCell

DlTtlPwrHsdpaGbrOnly40LeRatioLt60

Ratio between the DL total power reserved for GBR on HSDPA users (according to the reported NBAP common meas 'HS-DSCH Req power' from NodeB) and Pmax. (40LeRatioLt60)

Data Source

RNC C-Node

Source Field

VS.DlTtlPwrHsdpaGbrOnly.40LeRatioLt60

Source Section

FddCell

DlTtlPwrHsdpaGbrOnly60LeRatioLt80

Ratio between the DL total power reserved for GBR on HSDPA users (according to the reported NBAP common meas 'HS-DSCH Req power' from NodeB) and Pmax. (60LeRatioLt80)

Data Source

RNC C-Node

Source Field

VS.DlTtlPwrHsdpaGbrOnly.60LeRatioLt80

Source Section

FddCell

DlTtlPwrHsdpaGbrOnly80LeRatioLe100

Ratio between the DL total power reserved for GBR on HSDPA users (according to the reported NBAP common meas 'HS-DSCH Req power' from NodeB) and Pmax. (80LeRatioLe100)

Data Source

RNC C-Node

Source Field

VS.DlTtlPwrHsdpaGbrOnly.80LeRatioLe100

Source Section

FddCell

DlTtlPwrHsdpaNonGbrOnly00LeRatioLt20

Ratio between the DL total power reserved for non-GBR HSDPA users (the ones for which power self-tuning is not applied) and Pmax. (00LeRatioLt20)

Data Source

RNC C-Node

Source Field

VS.DlTtlPwrHsdpaNonGbrOnly.00LeRatioLt20

Source Section

FddCell

DlTtlPwrHsdpaNonGbrOnly20LeRatioLt40

Ratio between the DL total power reserved for non-GBR HSDPA users (the ones for which power self-tuning is not applied) and Pmax. (20LeRatioLt40)

Data Source

RNC C-Node

Source Field

VS.DlTtlPwrHsdpaNonGbrOnly.20LeRatioLt40

Source Section

FddCell

DlTtlPwrHsdpaNonGbrOnly40LeRatioLt60

Ratio between the DL total power reserved for non-GBR HSDPA users (the ones for which power self-tuning is not applied) and Pmax. (40LeRatioLt60)

Data Source

RNC C-Node

Source Field

VS.DlTtlPwrHsdpaNonGbrOnly.40LeRatioLt60

Source Section

FddCell

DlTtlPwrHsdpaNonGbrOnly60LeRatioLt80

Ratio between the DL total power reserved for non-GBR HSDPA users (the ones for which power self-tuning is not applied) and Pmax. (60LeRatioLt80)

Data Source

RNC C-Node

Source Field

VS.DlTtlPwrHsdpaNonGbrOnly.60LeRatioLt80

Source Section

FddCell

DlTtlPwrHsdpaNonGbrOnly80LeRatioLe100

Ratio between the DL total power reserved for non-GBR HSDPA users (the ones for which power self-tuning is not applied) and Pmax. (80LeRatioLe100)

Data Source

RNC C-Node

Source Field

VS.DlTtlPwrHsdpaNonGbrOnly.80LeRatioLe100

Source Section

FddCell

DlTtlTxPwrR99Only00LeRatioLt20

DL TX power (of all codes not used for HS transmission) ratio P/Pmax received from NBAP common measurement per cell. (00LeRatioLt20)

Data Source

RNC C-Node

Source Field

VS.DlTtlTxPwrR99Only.00LeRatioLt20

Source Section

FddCell

DlTtlTxPwrR99Only20LeRatioLt40

DL TX power (of all codes not used for HS transmission) ratio P/Pmax received from NBAP common measurement per cell. (20LeRatioLt40)

Data Source

RNC C-Node

Source Field

VS.DlTtlTxPwrR99Only.20LeRatioLt40

Source Section

FddCell

DlTtlTxPwrR99Only40LeRatioLt60

DL TX power (of all codes not used for HS transmission) ratio P/Pmax received from NBAP common measurement per cell. (40LeRatioLt60)

Data Source

RNC C-Node

Source Field

VS.DlTtlTxPwrR99Only.40LeRatioLt60

Source Section

FddCell

DlTtlTxPwrR99Only60LeRatioLt80

DL TX power (of all codes not used for HS transmission) ratio P/Pmax received from NBAP common measurement per cell. (60LeRatioLt80)

Data Source

RNC C-Node

Source Field

VS.DlTtlTxPwrR99Only.60LeRatioLt80

Source Section

FddCell

DlTtlTxPwrR99Only80LeRatioLe100

DL TX power (of all codes not used for HS transmission) ratio P/Pmax received from NBAP common measurement per cell. (80LeRatioLe100)

Data Source

RNC C-Node

Source Field

VS.DlTtlTxPwrR99Only.80LeRatioLe100

Source Section

FddCell

DownsizingStep1SuccessDchHsdpa

Number of successful downsizing to always on step1 for communication which reference cell is on serving RNC. This counter is screened according to the source downlink ASConfId (DchHsdpa)

Data Source

RNC C-Node

Source Field

VS.DownsizingStep1Success.DchHsdpa

Source Section

FddCell

DownsizingStep1SuccessDchOther

Number of successful downsizing to always on step1 for communication which reference cell is on serving RNC. This counter is screened according to the source downlink ASConfId (DchOther)

Data Source

RNC C-Node

Source Field

VS.DownsizingStep1Success.DchOther

Source Section

FddCell

DownsizingStep1SuccessDchPsIb128

Number of successful downsizing to always on step1 for communication which reference cell is on serving RNC. This counter is screened according to the source downlink ASConfId (DchPsIb128)

Data Source

RNC C-Node

Source Field

VS.DownsizingStep1Success.DchPsIb128

Source Section

FddCell

DownsizingStep1SuccessDchPsIb256

Number of successful downsizing to always on step1 for communication which reference cell is on serving RNC. This counter is screened according to the source downlink ASConfId (DchPsIb256)

Data Source

RNC C-Node

Source Field

VS.DownsizingStep1Success.DchPsIb256

Source Section

FddCell

DownsizingStep1SuccessDchPsIb384

Number of successful downsizing to always on step1 for communication which reference cell is on serving RNC. This counter is screened according to the source downlink ASConfId (DchPsIb384)

Data Source

RNC C-Node

Source Field

VS.DownsizingStep1Success.DchPsIb384

Source Section

FddCell

DownsizingStep1SuccessDchPsIb64

Number of successful downsizing to always on step1 for communication which reference cell is on serving RNC. This counter is screened according to the source downlink ASConfId (DchPsIb64)

Data Source

RNC C-Node

Source Field

VS.DownsizingStep1Success.DchPsIb64

Source Section

FddCell

DownsizingStep1SuccessDchPsIbLt64

Number of successful downsizing to always on step1 for communication which reference cell is on serving RNC. This counter is screened according to the source downlink ASConfId (DchPsIbLt64)

Data Source

RNC C-Node

Source Field

VS.DownsizingStep1Success.DchPsIbLt64

Source Section

FddCell

DownsizingStep1UnsuccessDchHsdpa

Number of unsuccessful downsizing to always on step1 for communication which reference cell is on serving RNC. This counter is screened according to the source downlink ASConfId (DchHsdpa)

Data Source

RNC C-Node

Source Field

VS.DownsizingStep1Unsuccess.DchHsdpa

Source Section

FddCell

DownsizingStep1UnsuccessDchOther

Number of unsuccessful downsizing to always on step1 for communication which reference cell is on serving RNC. This counter is screened according to the source downlink ASConfId (DchOther)

Data Source

RNC C-Node

Source Field

VS.DownsizingStep1Unsuccess.DchOther

Source Section

FddCell

DownsizingStep1UnsuccessDchPsIb128

Number of unsuccessful downsizing to always on step1 for communication which reference cell is on serving RNC. This counter is screened according to the source downlink ASConfId (DchPsIb128)

Data Source

RNC C-Node

Source Field

VS.DownsizingStep1Unsuccess.DchPsIb128

Source Section

FddCell

DownsizingStep1UnsuccessDchPsIb256

Number of unsuccessful downsizing to always on step1 for communication which reference cell is on serving RNC. This counter is screened according to the source downlink ASConfId (DchPsIb256)

Data Source

RNC C-Node

Source Field

VS.DownsizingStep1Unsuccess.DchPsIb256

Source Section

FddCell

DownsizingStep1UnsuccessDchPsIb384

Number of unsuccessful downsizing to always on step1 for communication which reference cell is on serving RNC. This counter is screened according to the source downlink ASConfId (DchPsIb384)

Data Source

RNC C-Node

Source Field

VS.DownsizingStep1Unsuccess.DchPsIb384

Source Section

FddCell

DownsizingStep1UnsuccessDchPsIb64

Number of unsuccessful downsizing to always on step1 for communication which reference cell is on serving RNC. This counter is screened according to the source downlink ASConfId (DchPsIb64)

Data Source

RNC C-Node

Source Field

VS.DownsizingStep1Unsuccess.DchPsIb64

Source Section

FddCell

DownsizingStep1UnsuccessDchPsIbLt64

Number of unsuccessful downsizing to always on step1 for communication which reference cell is on serving RNC. This counter is screened according to the source downlink ASConfId (DchPsIbLt64)

Data Source

RNC C-Node

Source Field

VS.DownsizingStep1Unsuccess.DchPsIbLt64

Source Section

FddCell

DownsizingStep2SuccessDwnStp2CellFach

Number of successful communication release, due to a transition to always on step2, for communication which reference cell is on serving RNC. This counter is screened according to the source downlink ASConfId. This counter is "Always 0" (not used) when the xPCH feature is active. The screening #0 (DwnStp2Other) is pegged with the number of RB Reconfiguration Failure messages received from the UE with cause ("Configuration Unsupported") when the RB Reconf. Message leading to the failure was triggering a transition to xPCH. (DwnStp2CellFach)

Data Source

RNC C-Node

Source Field

VS.DownsizingStep2Success.DwnStp2CellFach

Source Section

FddCell

DownsizingStep2SuccessDwnStp2DchPsIb0

Number of successful communication release, due to a transition to always on step2, for communication which reference cell is on serving RNC. This counter is screened according to the source downlink ASConfId. This counter is "Always 0" (not used) when the xPCH feature is active. The screening #0 (DwnStp2Other) is pegged with the number of RB Reconfiguration Failure messages received from the UE with cause ("Configuration Unsupported") when the RB Reconf. Message leading to the failure was triggering a transition to xPCH. (DwnStp2DchPsIb0)

Data Source

RNC C-Node

Source Field

VS.DownsizingStep2Success.DwnStp2DchPsIb0

Source Section

FddCell

DownsizingStep2SuccessDwnStp2DchPsIb8

Number of successful communication release, due to a transition to always on step2, for communication which reference cell is on serving RNC. This counter is screened according to the source downlink ASConfId. This counter is "Always 0" (not used) when the xPCH feature is active. The screening #0 (DwnStp2Other) is pegged with the number of RB Reconfiguration Failure messages received from the UE with cause ("Configuration Unsupported") when the RB Reconf. Message leading to the failure was triggering a transition to xPCH. (DwnStp2DchPsIb8)

Data Source

RNC C-Node

Source Field

VS.DownsizingStep2Success.DwnStp2DchPsIb8

Source Section

FddCell

DownsizingStep2SuccessDwnStp2Other

Number of successful communication release, due to a transition to always on step2, for communication which reference cell is on serving RNC. This counter is screened according to the source downlink ASConfId. This counter is "Always 0" (not used) when the xPCH feature is active. The screening #0 (DwnStp2Other) is pegged with the number of RB Reconfiguration Failure messages received from the UE with cause ("Configuration Unsupported") when the RB Reconf. Message leading to the failure was triggering a transition to xPCH. (DwnStp2Other)

Data Source

RNC C-Node

Source Field

VS.DownsizingStep2Success.DwnStp2Other

Source Section

FddCell

EdchActiveSetSucAdditionEdchSetup

Number of successful RL addition in the E-DCH active set. (EdchSetup)

Data Source

RNC C-Node

Source Field

VS.EdchActiveSetSucAddition.EdchSetup

Source Section

FddCell

EdchActiveSetSucAdditionRrcEvent1A1C

Number of successful RL addition in the E-DCH active set. (RrcEvent1A1C)

Data Source

RNC C-Node

Source Field

VS.EdchActiveSetSucAddition.RrcEvent1A1C

Source Section

FddCell

EdchActiveSetSucAdditionRrcEvent1D

Number of successful RL addition in the E-DCH active set. (RrcEvent1D)

Data Source

RNC C-Node

Source Field

VS.EdchActiveSetSucAddition.RrcEvent1D

Source Section

FddCell

EdchActiveSetSucAdditionRrcEvent1J

Number of successful RL addition in the E-DCH active set. (RrcEvent1J)

Data Source

RNC C-Node

Source Field

VS.EdchActiveSetSucAddition.RrcEvent1J

Source Section

FddCell

EdchActiveSetSucDelEdchRelease

Number of successful RL deletion from the E-DCH active set. (EdchRelease)

Data Source

RNC C-Node

Source Field

VS.EdchActiveSetSucDel.EdchRelease

Source Section

FddCell

EdchActiveSetSucDelRrcEvent1B1A

Number of successful RL deletion from the E-DCH active set. (RrcEvent1B1A)

Data Source

RNC C-Node

Source Field

VS.EdchActiveSetSucDel.RrcEvent1B1A

Source Section

FddCell

EdchActiveSetSucDelRrcEvent1D

Number of successful RL deletion from the E-DCH active set. (RrcEvent1D)

Data Source

RNC C-Node

Source Field

VS.EdchActiveSetSucDel.RrcEvent1D

Source Section

FddCell

EdchActiveSetSucDelRrcEvent1J

Number of successful RL deletion from the E-DCH active set. (RrcEvent1J)

Data Source

RNC C-Node

Source Field

VS.EdchActiveSetSucDel.RrcEvent1J

Source Section

FddCell

EdchActiveSetUnsucAddEdchSetup

Number of unsuccessful RL addition in the E-DCH active set. (EdchSetup)

Data Source

RNC C-Node

Source Field

VS.EdchActiveSetUnsucAdd.EdchSetup

Source Section

FddCell

EdchActiveSetUnsucAddRrcEvent1A1C

Number of unsuccessful RL addition in the E-DCH active set. (RrcEvent1A1C)

Data Source

RNC C-Node

Source Field

VS.EdchActiveSetUnsucAdd.RrcEvent1A1C

Source Section

FddCell

EdchActiveSetUnsucAddRrcEvent1D

Number of unsuccessful RL addition in the E-DCH active set. (RrcEvent1D)

Data Source

RNC C-Node

Source Field

VS.EdchActiveSetUnsucAdd.RrcEvent1D

Source Section

FddCell

EdchActiveSetUnsucAddRrcEvent1J

Number of unsuccessful RL addition in the E-DCH active set. (RrcEvent1J)

Data Source

RNC C-Node

Source Field

VS.EdchActiveSetUnsucAdd.RrcEvent1J

Source Section

FddCell

EdchActiveSetUnsucDelEdchRelease

Number of unsuccessful RL deletion from the E-DCH active set. (EdchRelease)

Data Source

RNC C-Node

Source Field

VS.EdchActiveSetUnsucDel.EdchRelease

Source Section

FddCell

EdchActiveSetUnsucDelRrcEvent1B1A

Number of unsuccessful RL deletion from the E-DCH active set. (RrcEvent1B1A)

Data Source

RNC C-Node

Source Field

VS.EdchActiveSetUnsucDel.RrcEvent1B1A

Source Section

FddCell

EdchActiveSetUnsucDelRrcEvent1D

Number of unsuccessful RL deletion from the E-DCH active set. (RrcEvent1D)

Data Source

RNC C-Node

Source Field

VS.EdchActiveSetUnsucDel.RrcEvent1D

Source Section

FddCell

EdchActiveSetUnsucDelRrcEvent1J

Number of unsuccessful RL deletion from the E-DCH active set. (RrcEvent1J)

Data Source

RNC C-Node

Source Field

VS.EdchActiveSetUnsucDel.RrcEvent1J

Source Section

FddCell

EdchCellDeletionActSetUpd

Number of E-DCH Cell Deletion (ActSetUpd)

Data Source

RNC C-Node

Source Field

VS.EdchCellDeletion.ActSetUpd

Source Section

FddCell

EdchCellDeletionRadioLinkFail

Number of E-DCH Cell Deletion (RadioLinkFail)

Data Source

RNC C-Node

Source Field

VS.EdchCellDeletion.RadioLinkFail

Source Section

FddCell

EdchFpRetransHarqNharqFailInd

Number of E-DCH HARQ retransmissions for each sub-frame. (NharqFailInd)

Data Source

RNC C-Node

Source Field

VS.EdchFpRetransHarq.NharqFailInd

Source Section

FddCell

EdchFpRetransHarqNsubfrmNharqEq0

Number of E-DCH HARQ retransmissions for each sub-frame. (NsubfrmNharqEq0)

Data Source

RNC C-Node

Source Field

VS.EdchFpRetransHarq.NsubfrmNharqEq0

Source Section

FddCell

EdchFpRetransHarqNsubfrmNharqEq1

Number of E-DCH HARQ retransmissions for each sub-frame. (NsubfrmNharqEq1)

Data Source

RNC C-Node

Source Field

VS.EdchFpRetransHarq.NsubfrmNharqEq1

Source Section

FddCell

EdchFpRetransHarqNsubfrmNharqEq2

Number of E-DCH HARQ retransmissions for each sub-frame. (NsubfrmNharqEq2)

Data Source

RNC C-Node

Source Field

VS.EdchFpRetransHarq.NsubfrmNharqEq2

Source Section

FddCell

EdchFpRetransHarqNsubfrmNharqEq3

Number of E-DCH HARQ retransmissions for each sub-frame. (NsubfrmNharqEq3)

Data Source

RNC C-Node

Source Field

VS.EdchFpRetransHarq.NsubfrmNharqEq3

Source Section

FddCell

EdchFpRetransHarqNsubfrmNharqGt3

Number of E-DCH HARQ retransmissions for each sub-frame. (NsubfrmNharqGt3)

Data Source

RNC C-Node

Source Field

VS.EdchFpRetransHarq.NsubfrmNharqGt3

Source Section

FddCell

EdchIubTnlCongestIndcDelayBuildUp

Number of E-DCH Congestion Indication sent. (DelayBuildUp)

Data Source

RNC C-Node

Source Field

VS.EdchIubTnlCongestIndc.DelayBuildUp

Source Section

FddCell

EdchIubTnlCongestIndcFrameLoss

Number of E-DCH Congestion Indication sent. (FrameLoss)

Data Source

RNC C-Node

Source Field

VS.EdchIubTnlCongestIndc.FrameLoss

Source Section

FddCell

EdchIubTnlCongestIndcNoCongestion

Number of E-DCH Congestion Indication sent. (NoCongestion)

Data Source

RNC C-Node

Source Field

VS.EdchIubTnlCongestIndc.NoCongestion

Source Section

FddCell

EdchIubTnlCongestIndcReserved

Number of E-DCH Congestion Indication sent. (Reserved)

Data Source

RNC C-Node

Source Field

VS.EdchIubTnlCongestIndc.Reserved

Source Section

FddCell

EdchIuRelAbnormalCACReject

Number of Iu release requested for E-DCH call. (CACReject)

Data Source

RNC C-Node

Source Field

VS.EdchIuRelAbnormal.CACReject

Source Section

FddCell

EdchIuRelAbnormalMobilityFailure

Number of Iu release requested for E-DCH call. (MobilityFailure)

Data Source

RNC C-Node

Source Field

VS.EdchIuRelAbnormal.MobilityFailure

Source Section

FddCell

EdchLinkImbalance

Number of detected uplink and downlink imbalances. (EdchLinkImbalance)

Data Source

RNC C-Node

Source Field

VS.EdchLinkImbalance

Source Section

FddCell

EdchMacTsnReassemblyErrDupTsn

Number of Error TSN detected (DupTsn)

Data Source

RNC C-Node

Source Field

VS.EdchMacTsnReassemblyErr.DupTsn

Source Section

FddCell

EdchMacTsnReassemblyErrUnrecovTsn

Number of Error TSN detected (UnrecovTsn)

Data Source

RNC C-Node

Source Field

VS.EdchMacTsnReassemblyErr.UnrecovTsn

Source Section

FddCell

EdchSucMobilityEdchCallToEdchCallInterFreqMob

Number of successful E-DCH mobility. (EdchCallToEdchCallInterFreqMob)

Data Source

RNC C-Node

Source Field

VS.EdchSucMobility.EdchCallToEdchCallInterFreqMob

Source Section

FddCell

EdchSucMobilityEdchCallToEdchCallIntraFreqMob

Number of successful E-DCH mobility. (EdchCallToEdchCallIntraFreqMob)

Data Source

RNC C-Node

Source Field

VS.EdchSucMobility.EdchCallToEdchCallIntraFreqMob

Source Section

FddCell

EdchSucMobilityEdchCallToNonEdchCallInterFreqMob

Number of successful E-DCH mobility. (EdchCallToNonEdchCallInterFreqMob)

Data Source

RNC C-Node

Source Field

VS.EdchSucMobility.EdchCallToNonEdchCallInterFreqMob

Source Section

FddCell

EdchSucMobilityEdchCallToNonEdchCallIntraFreqMob

Number of successful E-DCH mobility. (EdchCallToNonEdchCallIntraFreqMob)

Data Source

RNC C-Node

Source Field

VS.EdchSucMobility.EdchCallToNonEdchCallIntraFreqMob

Source Section

FddCell

EdchSucMobilityEdchCallTTI10ToEdchCallTTI2

Number of successful E-DCH mobility. (EdchCallTTI10ToEdchCallTTI2)

Data Source

RNC C-Node

Source Field

VS.EdchSucMobility.EdchCallTTI10ToEdchCallTTI2

Source Section

FddCell

EdchSucMobilityEdchCallTTI2ToEdchCallTTI10

Number of successful E-DCH mobility. (EdchCallTTI2ToEdchCallTTI10)

Data Source

RNC C-Node

Source Field

VS.EdchSucMobility.EdchCallTTI2ToEdchCallTTI10

Source Section

FddCell

EdchSucMobilityEdchCallTTI2ToEdchCallTTI2

Number of successful E-DCH mobility. (EdchCallTTI2ToEdchCallTTI2)

Data Source

RNC C-Node

Source Field

VS.EdchSucMobility.EdchCallTTI2ToEdchCallTTI2

Source Section

FddCell

EdchSucMobilityNonEdchCallToEdchCallInterFreqMob

Number of successful E-DCH mobility. (NonEdchCallToEdchCallInterFreqMob)

Data Source

RNC C-Node

Source Field

VS.EdchSucMobility.NonEdchCallToEdchCallInterFreqMob

Source Section

FddCell

EdchSucMobilityNonEdchCallToEdchCallIntraFreqMob

Number of successful E-DCH mobility. (NonEdchCallToEdchCallIntraFreqMob)

Data Source

RNC C-Node

Source Field

VS.EdchSucMobility.NonEdchCallToEdchCallIntraFreqMob

Source Section

FddCell

EdchUnsucMobilityEdchCallToEdchCallInterFreqMob

Number of unsuccessful E-DCH mobility. (EdchCallToEdchCallInterFreqMob)

Data Source

RNC C-Node

Source Field

VS.EdchUnsucMobility.EdchCallToEdchCallInterFreqMob

Source Section

FddCell

EdchUnsucMobilityEdchCallToEdchCallIntraFreqMob

Number of unsuccessful E-DCH mobility. (EdchCallToEdchCallIntraFreqMob)

Data Source

RNC C-Node

Source Field

VS.EdchUnsucMobility.EdchCallToEdchCallIntraFreqMob

Source Section

FddCell

EdchUnsucMobilityEdchCallToNonEdchCallInterFreqMob

Number of unsuccessful E-DCH mobility. (EdchCallToNonEdchCallInterFreqMob)

Data Source

RNC C-Node

Source Field

VS.EdchUnsucMobility.EdchCallToNonEdchCallInterFreqMob

Source Section

FddCell

EdchUnsucMobilityEdchCallToNonEdchCallIntraFreqMob

Number of unsuccessful E-DCH mobility. (EdchCallToNonEdchCallIntraFreqMob)

Data Source

RNC C-Node

Source Field

VS.EdchUnsucMobility.EdchCallToNonEdchCallIntraFreqMob

Source Section

FddCell

EdchUnsucMobilityEdchCallTTI10ToEdchCallTTI2

Number of unsuccessful E-DCH mobility. (EdchCallTTI10ToEdchCallTTI2)

Data Source

RNC C-Node

Source Field

VS.EdchUnsucMobility.EdchCallTTI10ToEdchCallTTI2

Source Section

FddCell

EdchUnsucMobilityEdchCallTTI2ToEdchCallTTI10

Number of unsuccessful E-DCH mobility. (EdchCallTTI2ToEdchCallTTI10)

Data Source

RNC C-Node

Source Field

VS.EdchUnsucMobility.EdchCallTTI2ToEdchCallTTI10

Source Section

FddCell

EdchUnsucMobilityEdchCallTTI2ToEdchCallTTI2

Number of unsuccessful E-DCH mobility. (EdchCallTTI2ToEdchCallTTI2)

Data Source

RNC C-Node

Source Field

VS.EdchUnsucMobility.EdchCallTTI2ToEdchCallTTI2

Source Section

FddCell

EdchUnsucMobilityNonEdchCallToEdchCallInterFreqMob

Number of unsuccessful E-DCH mobility. (NonEdchCallToEdchCallInterFreqMob)

Data Source

RNC C-Node

Source Field

VS.EdchUnsucMobility.NonEdchCallToEdchCallInterFreqMob

Source Section

FddCell

EdchUnsucMobilityNonEdchCallToEdchCallIntraFreqMob

Number of unsuccessful E-DCH mobility. (NonEdchCallToEdchCallIntraFreqMob)

Data Source

RNC C-Node

Source Field

VS.EdchUnsucMobility.NonEdchCallToEdchCallIntraFreqMob

Source Section

FddCell

ExcdAggrCellListSizeInterFreqAvg

Amount by which the maximum inter-frequency neighbor list size is exceeded. (Avg)

Data Source

RNC C-Node

Source Field

VS.ExcdAggrCellListSizeInterFreq.Avg

Source Section

FddCell

ExcdAggrCellListSizeInterFreqCum

Amount by which the maximum inter-frequency neighbor list size is exceeded. (Cum)

Data Source

RNC C-Node

Source Field

VS.ExcdAggrCellListSizeInterFreq.Cum

Source Section

FddCell

ExcdAggrCellListSizeInterFreqMax

Amount by which the maximum inter-frequency neighbor list size is exceeded. (Max)

Data Source

RNC C-Node

Source Field

VS.ExcdAggrCellListSizeInterFreq.Max

Source Section

FddCell

ExcdAggrCellListSizeInterFreqMin

Amount by which the maximum inter-frequency neighbor list size is exceeded. (Min)

Data Source

RNC C-Node

Source Field

VS.ExcdAggrCellListSizeInterFreq.Min

Source Section

FddCell

ExcdAggrCellListSizeInterFreqNbEvt

Amount by which the maximum inter-frequency neighbor list size is exceeded. (NbEvt)

Data Source

RNC C-Node

Source Field

VS.ExcdAggrCellListSizeInterFreq.NbEvt

Source Section

FddCell

ExcdAggrCellListSizeInterRATAvg

Amount by which the maximum inter-RAT neighbor list size is exceeded. (Avg)

Data Source

RNC C-Node

Source Field

VS.ExcdAggrCellListSizeInterRAT.Avg

Source Section

FddCell

ExcdAggrCellListSizeInterRATCum

Amount by which the maximum inter-RAT neighbor list size is exceeded. (Cum)

Data Source

RNC C-Node

Source Field

VS.ExcdAggrCellListSizeInterRAT.Cum

Source Section

FddCell

ExcdAggrCellListSizeInterRATMax

Amount by which the maximum inter-RAT neighbor list size is exceeded. (Max)

Data Source

RNC C-Node

Source Field

VS.ExcdAggrCellListSizeInterRAT.Max

Source Section

FddCell

ExcdAggrCellListSizeInterRATMin

Amount by which the maximum inter-RAT neighbor list size is exceeded. (Min)

Data Source

RNC C-Node

Source Field

VS.ExcdAggrCellListSizeInterRAT.Min

Source Section

FddCell

ExcdAggrCellListSizeInterRATNbEvt

Amount by which the maximum inter-RAT neighbor list size is exceeded. (NbEvt)

Data Source

RNC C-Node

Source Field

VS.ExcdAggrCellListSizeInterRAT.NbEvt

Source Section

FddCell

ExceededAggregateCellListSizeIntraFreqAvg

Amount by which the maximum intra-frequency neighbour list size is exceeded (Avg)

Data Source

RNC C-Node

Source Field

VS.ExceededAggregateCellListSizeIntraFreq.Avg

Source Section

FddCell

ExceededAggregateCellListSizeIntraFreqCum

Amount by which the maximum intra-frequency neighbour list size is exceeded (Cum)

Data Source

RNC C-Node

Source Field

VS.ExceededAggregateCellListSizeIntraFreq.Cum

Source Section

FddCell

ExceededAggregateCellListSizeIntraFreqMax

Amount by which the maximum intra-frequency neighbour list size is exceeded (Max)

Data Source

RNC C-Node

Source Field

VS.ExceededAggregateCellListSizeIntraFreq.Max

Source Section

FddCell

ExceededAggregateCellListSizeIntraFreqMin

Amount by which the maximum intra-frequency neighbour list size is exceeded (Min)

Data Source

RNC C-Node

Source Field

VS.ExceededAggregateCellListSizeIntraFreq.Min

Source Section

FddCell

ExceededAggregateCellListSizeIntraFreqNbEvt

Amount by which the maximum intra-frequency neighbour list size is exceeded (NbEvt)

Data Source

RNC C-Node

Source Field

VS.ExceededAggregateCellListSizeIntraFreq.NbEvt

Source Section

FddCell

FailNotState1MulMoCsEtcFailInState2

Number of call failures with Multi-RAB originating establishment state other than 1 in CS domain (EtcFailInState2)

Data Source

RNC C-Node

Source Field

VS.FailNotState1MulMoCs.EtcFailInState2

Source Section

FddCell

FailNotState1MulMoCsEtcFailInState3

Number of call failures with Multi-RAB originating establishment state other than 1 in CS domain (EtcFailInState3)

Data Source

RNC C-Node

Source Field

VS.FailNotState1MulMoCs.EtcFailInState3

Source Section

FddCell

FailNotState1MulMoCsEtcFailInState4

Number of call failures with Multi-RAB originating establishment state other than 1 in CS domain (EtcFailInState4)

Data Source

RNC C-Node

Source Field

VS.FailNotState1MulMoCs.EtcFailInState4

Source Section

FddCell

FailNotState1MulMoCsEtcFailInState5

Number of call failures with Multi-RAB originating establishment state other than 1 in CS domain (EtcFailInState5)

Data Source

RNC C-Node

Source Field

VS.FailNotState1MulMoCs.EtcFailInState5

Source Section

FddCell

FailNotState1MulMoCsFailOtherState2IncompleteCall

Number of call failures with Multi-RAB originating establishment state other than 1 in CS domain (FailOtherState2IncompleteCall)

Data Source

RNC C-Node

Source Field

VS.FailNotState1MulMoCs.FailOtherState2IncompleteCall

Source Section

FddCell

FailNotState1MulMoCsFailOtherState3IncompleteCall

Number of call failures with Multi-RAB originating establishment state other than 1 in CS domain (FailOtherState3IncompleteCall)

Data Source

RNC C-Node

Source Field

VS.FailNotState1MulMoCs.FailOtherState3IncompleteCall

Source Section

FddCell

FailNotState1MulMoCsFailOtherState4IncompleteCall

Number of call failures with Multi-RAB originating establishment state other than 1 in CS domain (FailOtherState4IncompleteCall)

Data Source

RNC C-Node

Source Field

VS.FailNotState1MulMoCs.FailOtherState4IncompleteCall

Source Section

FddCell

FailNotState1MulMoPsEtcFailInState2

Number of call failures with Multi-RAB originating establishment state other than 1 in PS domain (EtcFailInState2)

Data Source

RNC C-Node

Source Field

VS.FailNotState1MulMoPs.EtcFailInState2

Source Section

FddCell

FailNotState1MulMoPsEtcFailInState3

Number of call failures with Multi-RAB originating establishment state other than 1 in PS domain (EtcFailInState3)

Data Source

RNC C-Node

Source Field

VS.FailNotState1MulMoPs.EtcFailInState3

Source Section

FddCell

FailNotState1MulMoPsEtcFailInState4

Number of call failures with Multi-RAB originating establishment state other than 1 in PS domain (EtcFailInState4)

Data Source

RNC C-Node

Source Field

VS.FailNotState1MulMoPs.EtcFailInState4

Source Section

FddCell

FailNotState1MulMoPsEtcFailInState5

Number of call failures with Multi-RAB originating establishment state other than 1 in PS domain (EtcFailInState5)

Data Source

RNC C-Node

Source Field

VS.FailNotState1MulMoPs.EtcFailInState5

Source Section

FddCell

FailNotState1MulMoPsFailOtherState2IncompleteCall

Number of call failures with Multi-RAB originating establishment state other than 1 in PS domain (FailOtherState2IncompleteCall)

Data Source

RNC C-Node

Source Field

VS.FailNotState1MulMoPs.FailOtherState2IncompleteCall

Source Section

FddCell

FailNotState1MulMoPsFailOtherState3IncompleteCall

Number of call failures with Multi-RAB originating establishment state other than 1 in PS domain (FailOtherState3IncompleteCall)

Data Source

RNC C-Node

Source Field

VS.FailNotState1MulMoPs.FailOtherState3IncompleteCall

Source Section

FddCell

FailNotState1MulMoPsFailOtherState4IncompleteCall

Number of call failures with Multi-RAB originating establishment state other than 1 in PS domain (FailOtherState4IncompleteCall)

Data Source

RNC C-Node

Source Field

VS.FailNotState1MulMoPs.FailOtherState4IncompleteCall

Source Section

FddCell

FailNotState1MulMtCsEtcFailInState2

Number of call failures with Multi-RAB terminating establishment and CS domain in state other than 1 (EtcFailInState2)

Data Source

RNC C-Node

Source Field

VS.FailNotState1MulMtCs.EtcFailInState2

Source Section

FddCell

FailNotState1MulMtCsEtcFailInState3

Number of call failures with Multi-RAB terminating establishment and CS domain in state other than 1 (EtcFailInState3)

Data Source

RNC C-Node

Source Field

VS.FailNotState1MulMtCs.EtcFailInState3

Source Section

FddCell

FailNotState1MulMtCsEtcFailInState4

Number of call failures with Multi-RAB terminating establishment and CS domain in state other than 1 (EtcFailInState4)

Data Source

RNC C-Node

Source Field

VS.FailNotState1MulMtCs.EtcFailInState4

Source Section

FddCell

FailNotState1MulMtCsEtcFailInState5

Number of call failures with Multi-RAB terminating establishment and CS domain in state other than 1 (EtcFailInState5)

Data Source

RNC C-Node

Source Field

VS.FailNotState1MulMtCs.EtcFailInState5

Source Section

FddCell

FailNotState1MulMtCsFailOtherState2IncompleteCall

Number of call failures with Multi-RAB terminating establishment and CS domain in state other than 1 (FailOtherState2IncompleteCall)

Data Source

RNC C-Node

Source Field

VS.FailNotState1MulMtCs.FailOtherState2IncompleteCall

Source Section

FddCell

FailNotState1MulMtCsFailOtherState3IncompleteCall

Number of call failures with Multi-RAB terminating establishment and CS domain in state other than 1 (FailOtherState3IncompleteCall)

Data Source

RNC C-Node

Source Field

VS.FailNotState1MulMtCs.FailOtherState3IncompleteCall

Source Section

FddCell

FailNotState1MulMtCsFailOtherState4IncompleteCall

Number of call failures with Multi-RAB terminating establishment and CS domain in state other than 1 (FailOtherState4IncompleteCall)

Data Source

RNC C-Node

Source Field

VS.FailNotState1MulMtCs.FailOtherState4IncompleteCall

Source Section

FddCell

FailNotState1MulMtPsEtcFailInState2

Number of call failures with Multi-RAB terminating establishment and PS domain in state other than 1 (EtcFailInState2)

Data Source

RNC C-Node

Source Field

VS.FailNotState1MulMtPs.EtcFailInState2

Source Section

FddCell

FailNotState1MulMtPsEtcFailInState3

Number of call failures with Multi-RAB terminating establishment and PS domain in state other than 1 (EtcFailInState3)

Data Source

RNC C-Node

Source Field

VS.FailNotState1MulMtPs.EtcFailInState3

Source Section

FddCell

FailNotState1MulMtPsEtcFailInState4

Number of call failures with Multi-RAB terminating establishment and PS domain in state other than 1 (EtcFailInState4)

Data Source

RNC C-Node

Source Field

VS.FailNotState1MulMtPs.EtcFailInState4

Source Section

FddCell

FailNotState1MulMtPsEtcFailInState5

Number of call failures with Multi-RAB terminating establishment and PS domain in state other than 1 (EtcFailInState5)

Data Source

RNC C-Node

Source Field

VS.FailNotState1MulMtPs.EtcFailInState5

Source Section

FddCell

FailNotState1MulMtPsFailOtherState2IncompleteCall

Number of call failures with Multi-RAB terminating establishment and PS domain in state other than 1 (FailOtherState2IncompleteCall)

Data Source

RNC C-Node

Source Field

VS.FailNotState1MulMtPs.FailOtherState2IncompleteCall

Source Section

FddCell

FailNotState1MulMtPsFailOtherState3IncompleteCall

Number of call failures with Multi-RAB terminating establishment and PS domain in state other than 1 (FailOtherState3IncompleteCall)

Data Source

RNC C-Node

Source Field

VS.FailNotState1MulMtPs.FailOtherState3IncompleteCall

Source Section

FddCell

FailNotState1MulMtPsFailOtherState4IncompleteCall

Number of call failures with Multi-RAB terminating establishment and PS domain in state other than 1 (FailOtherState4IncompleteCall)

Data Source

RNC C-Node

Source Field

VS.FailNotState1MulMtPs.FailOtherState4IncompleteCall

Source Section

FddCell

FailNotState1NorMoCsCirEtcConvFailInState3

Number of call failures with normal originating establishment state other than 1 in CS domain (CirEtcConvFailInState3)

Data Source

RNC C-Node

Source Field

VS.FailNotState1NorMoCs.CirEtcConvFailInState3

Source Section

FddCell

FailNotState1NorMoCsCirEtcConvFailInState4

Number of call failures with normal originating establishment state other than 1 in CS domain (CirEtcConvFailInState4)

Data Source

RNC C-Node

Source Field

VS.FailNotState1NorMoCs.CirEtcConvFailInState4

Source Section

FddCell

FailNotState1NorMoCsCirEtcConvFailInState5

Number of call failures with normal originating establishment state other than 1 in CS domain (CirEtcConvFailInState5)

Data Source

RNC C-Node

Source Field

VS.FailNotState1NorMoCs.CirEtcConvFailInState5

Source Section

FddCell

FailNotState1NorMoCsFailOtherState2IncompleteCall

Number of call failures with normal originating establishment state other than 1 in CS domain (FailOtherState2IncompleteCall)

Data Source

RNC C-Node

Source Field

VS.FailNotState1NorMoCs.FailOtherState2IncompleteCall

Source Section

FddCell

FailNotState1NorMoCsFailOtherState3IncompleteCall

Number of call failures with normal originating establishment state other than 1 in CS domain (FailOtherState3IncompleteCall)

Data Source

RNC C-Node

Source Field

VS.FailNotState1NorMoCs.FailOtherState3IncompleteCall

Source Section

FddCell

FailNotState1NorMoCsFailOtherState4IncompleteCall

Number of call failures with normal originating establishment state other than 1 in CS domain (FailOtherState4IncompleteCall)

Data Source

RNC C-Node

Source Field

VS.FailNotState1NorMoCs.FailOtherState4IncompleteCall

Source Section

FddCell

FailNotState1NorMoCsFailState2

Number of call failures with normal originating establishment state other than 1 in CS domain (FailState2)

Data Source

RNC C-Node

Source Field

VS.FailNotState1NorMoCs.FailState2

Source Section

FddCell

FailNotState1NorMoCsVceEtcConvFailInState3

Number of call failures with normal originating establishment state other than 1 in CS domain (VceEtcConvFailInState3)

Data Source

RNC C-Node

Source Field

VS.FailNotState1NorMoCs.VceEtcConvFailInState3

Source Section

FddCell

FailNotState1NorMoCsVceEtcConvFailInState4

Number of call failures with normal originating establishment state other than 1 in CS domain (VceEtcConvFailInState4)

Data Source

RNC C-Node

Source Field

VS.FailNotState1NorMoCs.VceEtcConvFailInState4

Source Section

FddCell

FailNotState1NorMoCsVceEtcConvFailInState5

Number of call failures with normal originating establishment state other than 1 in CS domain (VceEtcConvFailInState5)

Data Source

RNC C-Node

Source Field

VS.FailNotState1NorMoCs.VceEtcConvFailInState5

Source Section

FddCell

FailNotState1NorMoPsEtcFailInState2

Number of call failures with normal originating establishment state other than 1 in PS domain (EtcFailInState2)

Data Source

RNC C-Node

Source Field

VS.FailNotState1NorMoPs.EtcFailInState2

Source Section

FddCell

FailNotState1NorMoPsEtcFailInState3

Number of call failures with normal originating establishment state other than 1 in PS domain (EtcFailInState3)

Data Source

RNC C-Node

Source Field

VS.FailNotState1NorMoPs.EtcFailInState3

Source Section

FddCell

FailNotState1NorMoPsEtcFailInState4

Number of call failures with normal originating establishment state other than 1 in PS domain (EtcFailInState4)

Data Source

RNC C-Node

Source Field

VS.FailNotState1NorMoPs.EtcFailInState4

Source Section

FddCell

FailNotState1NorMoPsEtcFailInState5

Number of call failures with normal originating establishment state other than 1 in PS domain (EtcFailInState5)

Data Source

RNC C-Node

Source Field

VS.FailNotState1NorMoPs.EtcFailInState5

Source Section

FddCell

FailNotState1NorMoPsFailOtherState2IncompleteCall

Number of call failures with normal originating establishment state other than 1 in PS domain (FailOtherState2IncompleteCall)

Data Source

RNC C-Node

Source Field

VS.FailNotState1NorMoPs.FailOtherState2IncompleteCall

Source Section

FddCell

FailNotState1NorMoPsFailOtherState3IncompleteCall

Number of call failures with normal originating establishment state other than 1 in PS domain (FailOtherState3IncompleteCall)

Data Source

RNC C-Node

Source Field

VS.FailNotState1NorMoPs.FailOtherState3IncompleteCall

Source Section

FddCell

FailNotState1NorMoPsFailOtherState4IncompleteCall

Number of call failures with normal originating establishment state other than 1 in PS domain (FailOtherState4IncompleteCall)

Data Source

RNC C-Node

Source Field

VS.FailNotState1NorMoPs.FailOtherState4IncompleteCall

Source Section

FddCell

FailNotState1NorMtCsCirEtcConvFailInState3

Number of call failures with normal terminating establishment state other than 1 in CS domain (CirEtcConvFailInState3)

Data Source

RNC C-Node

Source Field

VS.FailNotState1NorMtCs.CirEtcConvFailInState3

Source Section

FddCell

FailNotState1NorMtCsCirEtcConvFailInState4

Number of call failures with normal terminating establishment state other than 1 in CS domain (CirEtcConvFailInState4)

Data Source

RNC C-Node

Source Field

VS.FailNotState1NorMtCs.CirEtcConvFailInState4

Source Section

FddCell

FailNotState1NorMtCsCirEtcConvFailInState5

Number of call failures with normal terminating establishment state other than 1 in CS domain (CirEtcConvFailInState5)

Data Source

RNC C-Node

Source Field

VS.FailNotState1NorMtCs.CirEtcConvFailInState5

Source Section

FddCell

FailNotState1NorMtCsFailOtherState2IncompleteCall

Number of call failures with normal terminating establishment state other than 1 in CS domain (FailOtherState2IncompleteCall)

Data Source

RNC C-Node

Source Field

VS.FailNotState1NorMtCs.FailOtherState2IncompleteCall

Source Section

FddCell

FailNotState1NorMtCsFailOtherState3IncompleteCall

Number of call failures with normal terminating establishment state other than 1 in CS domain (FailOtherState3IncompleteCall)

Data Source

RNC C-Node

Source Field

VS.FailNotState1NorMtCs.FailOtherState3IncompleteCall

Source Section

FddCell

FailNotState1NorMtCsFailOtherState4IncompleteCall

Number of call failures with normal terminating establishment state other than 1 in CS domain (FailOtherState4IncompleteCall)

Data Source

RNC C-Node

Source Field

VS.FailNotState1NorMtCs.FailOtherState4IncompleteCall

Source Section

FddCell

FailNotState1NorMtCsFailState2

Number of call failures with normal terminating establishment state other than 1 in CS domain (FailState2)

Data Source

RNC C-Node

Source Field

VS.FailNotState1NorMtCs.FailState2

Source Section

FddCell

FailNotState1NorMtCsVceEtcConvFailInState3

Number of call failures with normal terminating establishment state other than 1 in CS domain (VceEtcConvFailInState3)

Data Source

RNC C-Node

Source Field

VS.FailNotState1NorMtCs.VceEtcConvFailInState3

Source Section

FddCell

FailNotState1NorMtCsVceEtcConvFailInState4

Number of call failures with normal terminating establishment state other than 1 in CS domain (VceEtcConvFailInState4)

Data Source

RNC C-Node

Source Field

VS.FailNotState1NorMtCs.VceEtcConvFailInState4

Source Section

FddCell

FailNotState1NorMtCsVceEtcConvFailInState5

Number of call failures with normal terminating establishment state other than 1 in CS domain (VceEtcConvFailInState5)

Data Source

RNC C-Node

Source Field

VS.FailNotState1NorMtCs.VceEtcConvFailInState5

Source Section

FddCell

FailNotState1NorMtPsEtcFailInState2

Number of call failures with normal terminating establishment state other than 1 in PS domain (EtcFailInState2)

Data Source

RNC C-Node

Source Field

VS.FailNotState1NorMtPs.EtcFailInState2

Source Section

FddCell

FailNotState1NorMtPsEtcFailInState3

Number of call failures with normal terminating establishment state other than 1 in PS domain (EtcFailInState3)

Data Source

RNC C-Node

Source Field

VS.FailNotState1NorMtPs.EtcFailInState3

Source Section

FddCell

FailNotState1NorMtPsEtcFailInState4

Number of call failures with normal terminating establishment state other than 1 in PS domain (EtcFailInState4)

Data Source

RNC C-Node

Source Field

VS.FailNotState1NorMtPs.EtcFailInState4

Source Section

FddCell

FailNotState1NorMtPsEtcFailInState5

Number of call failures with normal terminating establishment state other than 1 in PS domain (EtcFailInState5)

Data Source

RNC C-Node

Source Field

VS.FailNotState1NorMtPs.EtcFailInState5

Source Section

FddCell

FailNotState1NorMtPsFailOtherState2IncompleteCall

Number of call failures with normal terminating establishment state other than 1 in PS domain (FailOtherState2IncompleteCall)

Data Source

RNC C-Node

Source Field

VS.FailNotState1NorMtPs.FailOtherState2IncompleteCall

Source Section

FddCell

FailNotState1NorMtPsFailOtherState3IncompleteCall

Number of call failures with normal terminating establishment state other than 1 in PS domain (FailOtherState3IncompleteCall)

Data Source

RNC C-Node

Source Field

VS.FailNotState1NorMtPs.FailOtherState3IncompleteCall

Source Section

FddCell

FailNotState1NorMtPsFailOtherState4IncompleteCall

Number of call failures with normal terminating establishment state other than 1 in PS domain (FailOtherState4IncompleteCall)

Data Source

RNC C-Node

Source Field

VS.FailNotState1NorMtPs.FailOtherState4IncompleteCall

Source Section

FddCell

FailServCellChgEDCH_TransChnRecfgFail

Failed Serving E-DCH Cell Changes per failure cause: RNC receives a TRANSPORT CHANNEL RECONFIGURATION FAILURE message from the UE.

Data Source

RNC

Source Field

VS.FailServCellChangeEDCH.TransChnReconfigFail

Source Section

UtranCell

FailServCellChgEDCH_TransChnRecfgTout

Failed Serving E-DCH Cell Changes per failure cause: timer expiry when no TRANSPORT CHANNEL RECONFIGURATION COMPLETE message is received from the UE

Data Source

RNC

Source Field

VS.FailServCellChangeEDCH.TransChnReconfigTout

Source Section

UtranCell

FailServCellChgHSDSCH_sum

Failed Serving HS-DSCH Cell Changes due to all causes

Data Source

RNC

Source Field

VS.FailServCellChangeHSDSCH.sum

Source Section

PMs in support of HS-DSCH Cell Change

FailServCellChgHSDSCH_TransChnRecfgFail

Failed Serving HS-DSCH Cell Changes due to transport channel reconfiguartion failure

Data Source

RNC

Source Field

VS.FailServCellChangeHSDSCH.TransChnReconfigFail

Source Section

PMs in support of HS-DSCH Cell Change

FailServCellChgHSDSCH_TransChnRecfgTout

Failed Serving HS-DSCH Cell Changes due to transport channel reconfiguration timeout

Data Source

RNC

Source Field

VS.FailServCellChangeHSDSCH.TransChnReconfigTout

Source Section

PMs in support of HS-DSCH Cell Change

FailState1NorMoEtcfail

Number of call failures with normal originating establishment in state 1 (Etcfail)

Data Source

RNC C-Node

Source Field

VS.FailState1NorMo.Etcfail

Source Section

FddCell

FailState1NorMtEtcfail

Number of call failures with normal terminating establishment in state 1 (Etcfail)

Data Source

RNC C-Node

Source Field

VS.FailState1NorMt.Etcfail

Source Section

FddCell

FirstRrcConnectionRequestCallReestab

Number of first RRC connection requests for a given UE on a given cell. (CallReestab)

Data Source

RNC C-Node

Source Field

VS.FirstRrcConnectionRequest.CallReestab

Source Section

FddCell

FirstRrcConnectionRequestDetach

Number of first RRC connection requests for a given UE on a given cell. (Detach)

Data Source

RNC C-Node

Source Field

VS.FirstRrcConnectionRequest.Detach

Source Section

FddCell

FirstRrcConnectionRequestEmergency

Number of first RRC connection requests for a given UE on a given cell. (Emergency)

Data Source

RNC C-Node

Source Field

VS.FirstRrcConnectionRequest.Emergency

Source Section

FddCell

FirstRrcConnectionRequestIRATCCO

Number of first RRC connection requests for a given UE on a given cell. (IRATCCO)

Data Source

RNC C-Node

Source Field

VS.FirstRrcConnectionRequest.IRATCCO

Source Section

FddCell

FirstRrcConnectionRequestIRATCellResel

Number of first RRC connection requests for a given UE on a given cell. (IRATCellResel)

Data Source

RNC C-Node

Source Field

VS.FirstRrcConnectionRequest.IRATCellResel

Source Section

FddCell

FirstRrcConnectionRequestOrigBgrdCall

Number of first RRC connection requests for a given UE on a given cell. (OrigBgrdCall)

Data Source

RNC C-Node

Source Field

VS.FirstRrcConnectionRequest.OrigBgrdCall

Source Section

FddCell

FirstRrcConnectionRequestOrigConvCall

Number of first RRC connection requests for a given UE on a given cell. (OrigConvCall)

Data Source

RNC C-Node

Source Field

VS.FirstRrcConnectionRequest.OrigConvCall

Source Section

FddCell

FirstRrcConnectionRequestOrigHighPrioSig

Number of first RRC connection requests for a given UE on a given cell. (OrigHighPrioSig)

Data Source

RNC C-Node

Source Field

VS.FirstRrcConnectionRequest.OrigHighPrioSig

Source Section

FddCell

FirstRrcConnectionRequestOrigIntactCall

Number of first RRC connection requests for a given UE on a given cell. (OrigIntactCall)

Data Source

RNC C-Node

Source Field

VS.FirstRrcConnectionRequest.OrigIntactCall

Source Section

FddCell

FirstRrcConnectionRequestOrigLowPrioSig

Number of first RRC connection requests for a given UE on a given cell. (OrigLowPrioSig)

Data Source

RNC C-Node

Source Field

VS.FirstRrcConnectionRequest.OrigLowPrioSig

Source Section

FddCell

FirstRrcConnectionRequestOrigStrmCal

Number of first RRC connection requests for a given UE on a given cell. (OrigStrmCal)

Data Source

RNC C-Node

Source Field

VS.FirstRrcConnectionRequest.OrigStrmCal

Source Section

FddCell

FirstRrcConnectionRequestOrigSubscCall

Number of first RRC connection requests for a given UE on a given cell. (OrigSubscCall)

Data Source

RNC C-Node

Source Field

VS.FirstRrcConnectionRequest.OrigSubscCall

Source Section

FddCell

FirstRrcConnectionRequestRegistration

Number of first RRC connection requests for a given UE on a given cell. (Registration)

Data Source

RNC C-Node

Source Field

VS.FirstRrcConnectionRequest.Registration

Source Section

FddCell

FirstRrcConnectionRequestSpare12

Number of first RRC connection requests for a given UE on a given cell. (Spare12)

Data Source

RNC C-Node

Source Field

VS.FirstRrcConnectionRequest.Spare12

Source Section

FddCell

FirstRrcConnectionRequestTermBgrdCall

Number of first RRC connection requests for a given UE on a given cell. (TermBgrdCall)

Data Source

RNC C-Node

Source Field

VS.FirstRrcConnectionRequest.TermBgrdCall

Source Section

FddCell

FirstRrcConnectionRequestTermConvCall

Number of first RRC connection requests for a given UE on a given cell. (TermConvCall)

Data Source

RNC C-Node

Source Field

VS.FirstRrcConnectionRequest.TermConvCall

Source Section

FddCell

FirstRrcConnectionRequestTermHighPrioSig

Number of first RRC connection requests for a given UE on a given cell. (TermHighPrioSig)

Data Source

RNC C-Node

Source Field

VS.FirstRrcConnectionRequest.TermHighPrioSig

Source Section

FddCell

FirstRrcConnectionRequestTermIntactCall

Number of first RRC connection requests for a given UE on a given cell. (TermIntactCall)

Data Source

RNC C-Node

Source Field

VS.FirstRrcConnectionRequest.TermIntactCall

Source Section

FddCell

FirstRrcConnectionRequestTermLowPrioSig

Number of first RRC connection requests for a given UE on a given cell. (TermLowPrioSig)

Data Source

RNC C-Node

Source Field

VS.FirstRrcConnectionRequest.TermLowPrioSig

Source Section

FddCell

FirstRrcConnectionRequestTermStrmCall

Number of first RRC connection requests for a given UE on a given cell. (TermStrmCall)

Data Source

RNC C-Node

Source Field

VS.FirstRrcConnectionRequest.TermStrmCall

Source Section

FddCell

FirstRrcConnectionRequestTermUnknown

Number of first RRC connection requests for a given UE on a given cell. (TermUnknown)

Data Source

RNC C-Node

Source Field

VS.FirstRrcConnectionRequest.TermUnknown

Source Section

FddCell

FwdPowerOvldDuration

Forward Power Overload Duration represents the total time that a cell is overloaded due to Forward Power Control budget

Data Source

RNC

Source Field

VS.FwdPowerOvldDuration

Source Section

Common Control Channel

GrantedTypeAmrNbConfigAmrNbHighRate

Number of times an AMR configuration is granted at CS Narrow Band AMR RAB establishment (RAB setup and Relocation) for Iu UP V1. (AmrNbHighRate)

Data Source

RNC C-Node

Source Field

VS.GrantedTypeAmrNbConfig.AmrNbHighRate

Source Section

FddCell

GrantedTypeAmrNbConfigAmrNbLowRate

Number of times an AMR configuration is granted at CS Narrow Band AMR RAB establishment (RAB setup and Relocation) for Iu UP V1. (AmrNbLowRate)

Data Source

RNC C-Node

Source Field

VS.GrantedTypeAmrNbConfig.AmrNbLowRate

Source Section

FddCell

HHO_AttInterFreq_Qual

Succeeded by:HHO_AttPrepOutInterFreq_Qual. Attempted inter-frequency hard handovers due to quality

Data Source

RNC

Source Field

HHO.AttInterFreq.Qual

Source Section

Quality based inter-frequency hard handover

HHO_AttOutInterFreq_Load

Attempted outgoing inter-frequency hard handovers due to load on the used frequency, is initiated by sending one of the RRC Messages to the UE: PHYSICAL CHANNEL RECONFIGURATION, TRANSPORT CHANNEL RECONFIGURATION, RADIO BEARER RECONFIGURATION

Data Source

RNC

Source Field

HHO.AttOutInterFreq.Load

Source Section

Load based Inter-frequency Hard Handover

HHO_AttOutInterFreq_Qual

Attempted outgoing inter-frequency hard handovers due to quality is initiated by sending of the RRC messages to the UE: PHYSICAL CHANNEL RECONFIGURATION, TRANSPORT CHANNEL RECONFIGURATION, RADIO BEARER RECONFIGURATION

Data Source

RNC

Source Field

HHO.AttOutInterFreq.Qual

Source Section

Quality based inter-frequency hard handover

HHO_AttPrepOutInterFreq_Load

Attempted preparations for outgoing inter-frequency hard handovers due to load

Data Source

RNC

Source Field

VS.HHO.AttPrepOutInterFreq.Load

Source Section

Load based Inter-frequency Hard Handover

HHO_AttPrepOutInterFreq_Qual

Attempted preparations for outgoing inter-frequency hard handovers due to quality

Data Source

RNC

Source Field

VS.HHO.AttPrepOutInterFreq.Qual

Source Section

Quality based inter-frequency hard handover

HHO_AttPrepOutInterFreq_Qual_RSCP

Attempted preparations for outgoing inter-frequency hard handovers - quality due to RSCP - UtranCell

Data Source

RNC

Source Field

VS.HHO.AttPrepOutInterFreq.Qual.RSCP

Source Section

Quality based inter-frequency hard handover

HHO_FailInterFreq_Qual_ConfigUnsupported

Failed inter-frequency hard handovers due to quality due to Configuration is unsupported

Data Source

RNC

Source Field

HHO.FailInterFreq.Qual.ConfigUnsupported

Source Section

Quality based inter-frequency hard handover

HHO_FailInterFreq_Qual_PhysChanFail

Failed inter-frequency hard handovers due to quality due to Physical Channel Failure

Data Source

RNC

Source Field

HHO.FailInterFreq.Qual.PhysChanFail

Source Section

Quality based inter-frequency hard handover

HHO_FailInterFreq_Qual_ProcTimeout

Retired fr 3.0.6.0.0 - Failed inter-frequency hard handovers due to quality due to Procedural Timeout

Data Source

RNC

Source Field

HHO.FailInterFreq.Qual.ProcTimeout

Source Section

Quality based inter-frequency hard handover

HHO_FailInterFreq_Qual_ProtErr

Failed inter-frequency hard handovers due to quality due to Protocol Error

Data Source

RNC

Source Field

HHO.FailInterFreq.Qual.ProtErr

Source Section

Quality based inter-frequency hard handover

HHO_FailInterFreq_Qual_sum

Failed inter-frequency hard handovers due to quality due to all causes

Data Source

RNC

Source Field

HHO.FailInterFreq.Qual.sum

Source Section

Quality based inter-frequency hard handover

HHO_FailOutInterFreq_Load_ConfigUnsupp

Failed outgoing inter-frequency hard handovers due to load-Cause: Configuration Unsupported

Data Source

RNC

Source Field

HHO.FailOutInterFreq.Load.ConfigUnsupported

Source Section

Load based Inter-frequency Hard Handover

HHO_FailOutInterFreq_Load_PhysChanFail

Failed outgoing inter-frequency hard handovers due to load-Cause:Physical Channel Failure

Data Source

RNC

Source Field

HHO.FailOutInterFreq.Load.PhysChanFail

Source Section

Load based Inter-frequency Hard Handover

HHO_FailOutInterFreq_Load_ProtErr

Failed outgoing inter-frequency hard handovers due to load-Cause: Protocol Error

Data Source

RNC

Source Field

HHO.FailOutInterFreq.Load.ProtErr

Source Section

Load based Inter-frequency Hard Handover

HHO_FailOutInterFreq_Qual_ConfigUnsupp

Failed outgoing inter-frequency hard handovers due to quality-Cause:Configuration Unsupported

Data Source

RNC

Source Field

HHO.FailOutInterFreq.Qual.ConfigUnsupported

Source Section

Quality based inter-frequency hard handover

HHO_FailOutInterFreq_Qual_PhysChanFail

Failed outgoing inter-frequency hard handovers due to quality-Cause:Physical Channel Fail

Data Source

RNC

Source Field

HHO.FailOutInterFreq.Qual.PhysChanFail

Source Section

Quality based inter-frequency hard handover

HHO_FailOutInterFreq_Qual_ProtErr

Failed outgoing inter-frequency hard handovers due to quality-Cause:Protocol Error

Data Source

RNC

Source Field

HHO.FailOutInterFreq.Qual.ProtErr

Source Section

Quality based inter-frequency hard handover

HHO_SuccOutInterFreq_Load

Successful outgoing inter-frequency hard handovers due to load which is indicated by one of the RRC messages sent from UE to the source RNC:PHYSICAL CHANNEL RECONFIGURATION COMPLETE, TRANSPORT CHANNEL RECONFIGURATION COMPLETE, RADIO BEARER RECONFIGURATION COMPLETE

Data Source

RNC

Source Field

HHO.SuccOutInterFreq.Load

Source Section

Load based Inter-frequency Hard Handover

HHO_SuccOutInterFreq_Qual

Successful outgoing inter-frequency hard handovers due to quality which is indicated by receipt of one of the RRC messages sent from the UE to the source RNC as a response on a channel reconfiguration attempt: PHYSICAL CHANNEL RECONFIGURATION COMPLETE,TRANSPORT CHANNEL RECONFIGURATION COMPLETE, RADIO BEARER RECONFIGURATION COMPLETE

Data Source

RNC

Source Field

HHO.SuccOutInterFreq.Qual

Source Section

Quality based inter-frequency hard handover

HHOAttOutInterFreq

Total number of attempted outgoing inter-frequency hard handovers (AttOutInterFreq)

Data Source

RNC C-Node

Source Field

HHO.AttOutInterFreq

Source Section

FddCell

HHOAttOutInterFreqEcNo

Attempted outgoing inter-frequency hard handovers due to insufficient Ec/No quality of the used frequency. (EcNo)

Data Source

RNC C-Node

Source Field

HHO.AttOutInterFreq.EcNo

Source Section

FddCell

HHOAttOutInterFreqRSCP

Attempted outgoing inter-frequency hard handovers due to insufficient RSCP quality of the used frequency (RSCP)

Data Source

RNC C-Node

Source Field

HHO.AttOutInterFreq.RSCP

Source Section

FddCell

HHOSuccOutInterFreq

Total number of successful outgoing inter-frequency hard handovers. (SuccOutInterFreq)

Data Source

RNC C-Node

Source Field

HHO.SuccOutInterFreq

Source Section

FddCell

HHOSuccOutInterFreqEcNo

Successful outgoing inter-frequency hard handovers due to insufficient Ec/No quality of the used frequency. (EcNo)

Data Source

RNC C-Node

Source Field

HHO.SuccOutInterFreq.EcNo

Source Section

FddCell

HHOSuccOutInterFreqRSCP

Successful outgoing inter-frequency hard handovers due to insufficient RSCP quality of the used frequency. (RSCP)

Data Source

RNC C-Node

Source Field

HHO.SuccOutInterFreq.RSCP

Source Section

FddCell

HsdpaCACSuccess

Number of HSDPA CAC (HsdpaCACSuccess)

Data Source

RNC C-Node

Source Field

VS.HsdpaCACSuccess

Source Section

FddCell

HsdpaCACUnsuccessfulMaxAggGBR

Number of HSDPA CAC (MaxAggGBR)

Data Source

RNC C-Node

Source Field

VS.HsdpaCACUnsuccessful.MaxAggGBR

Source Section

FddCell

HsdpaCACUnsuccessfulMaxNumHsdpaUsers

Number of HSDPA CAC (MaxNumHsdpaUsers)

Data Source

RNC C-Node

Source Field

VS.HsdpaCACUnsuccessful.MaxNumHsdpaUsers

Source Section

FddCell

HsdpaCACUnsuccessfulMaxNumStreamHsdpaUsers

Number of HSDPA CAC (MaxNumStreamHsdpaUsers)

Data Source

RNC C-Node

Source Field

VS.HsdpaCACUnsuccessful.MaxNumStreamHsdpaUsers

Source Section

FddCell

HsdpaCellDeletionActSetUpd

Number of HSDPA Cell Deletion: the call is then still in a HSDPA state but there is no more HSDPA server. (ActSetUpd)

Data Source

RNC C-Node

Source Field

VS.HsdpaCellDeletion.ActSetUpd

Source Section

FddCell

HsdpaCellDeletionRadioLinkFail

Number of HSDPA Cell Deletion: the call is then still in a HSDPA state but there is no more HSDPA server. (RadioLinkFail)

Data Source

RNC C-Node

Source Field

VS.HsdpaCellDeletion.RadioLinkFail

Source Section

FddCell

HsdpaDCHToHsdpaTransSucc

Number of successful DCH to HSDPA transition.Counter is not significant when feature PM 29797 Multi-service on HSDPA is enabled (HsdpaDCHToHsdpaTransSucc)

Data Source

RNC C-Node

Source Field

VS.HsdpaDCHToHsdpaTransSucc

Source Section

FddCell

HsdpaIubCreditsConsumedRabPsIBHsdpa

Counts the total credits grants by NodeB in Kilo Bytes that are actually consumed by the I-Node. (RabPsIBHsdpa)

Data Source

RNC C-Node

Source Field

VS.HsdpaIubCreditsConsumed.RabPsIBHsdpa

Source Section

FddCell

HsdpaIubCreditsConsumedRabPsStrHsdpa

Counts the total credits grants by NodeB in Kilo Bytes that are actually consumed by the I-Node. (RabPsStrHsdpa)

Data Source

RNC C-Node

Source Field

VS.HsdpaIubCreditsConsumed.RabPsStrHsdpa

Source Section

FddCell

HsdpaIubCreditsRequestedRabPsIBHsdpa

Counts the total credits requested by the I-Node from NodeB in Kilo Bytes (RabPsIBHsdpa)

Data Source

RNC C-Node

Source Field

VS.HsdpaIubCreditsRequested.RabPsIBHsdpa

Source Section

FddCell

HsdpaIubCreditsRequestedRabPsStrHsdpa

Counts the total credits requested by the I-Node from NodeB in Kilo Bytes (RabPsStrHsdpa)

Data Source

RNC C-Node

Source Field

VS.HsdpaIubCreditsRequested.RabPsStrHsdpa

Source Section

FddCell

HsdpaIubDlControlFramesRabPsIBHsdpa

Counts the total number of downlink control frames sent to NodeB. The trigger is a control frame to NodeB (i.e., Capacity Request Frame). (RabPsIBHsdpa)

Data Source

RNC C-Node

Source Field

VS.HsdpaIubDlControlFrames.RabPsIBHsdpa

Source Section

FddCell

HsdpaIubDlControlFramesRabPsStrHsdpa

Counts the total number of downlink control frames sent to NodeB. The trigger is a control frame to NodeB (i.e., Capacity Request Frame). (RabPsStrHsdpa)

Data Source

RNC C-Node

Source Field

VS.HsdpaIubDlControlFrames.RabPsStrHsdpa

Source Section

FddCell

HsdpaIubFPDiscardedBytes

Counts the number of bytes discarded on the Iub HS-DSCH FP. The counter precision is a function of the PC update reporting period. (HsdpaIubFPDiscardedBytes)

Data Source

RNC C-Node

Source Field

VS.HsdpaIubFPDiscardedBytes

Source Section

FddCell

HsdpaIubNonZeroCapacityAllocRabPsIBHsdpa

Counts the total number of capacity allocation frames sent by NodeB with non-zero grant. (RabPsIBHsdpa)

Data Source

RNC C-Node

Source Field

VS.HsdpaIubNonZeroCapacityAlloc.RabPsIBHsdpa

Source Section

FddCell

HsdpaIubNonZeroCapacityAllocRabPsStrHsdpa

Counts the total number of capacity allocation frames sent by NodeB with non-zero grant. (RabPsStrHsdpa)

Data Source

RNC C-Node

Source Field

VS.HsdpaIubNonZeroCapacityAlloc.RabPsStrHsdpa

Source Section

FddCell

HsdpaIubZeroCapacityAllocRabPsIBHsdpa

Counts the total number of capacity allocation frames sent by NodeB with zero grant. (RabPsIBHsdpa)

Data Source

RNC C-Node

Source Field

VS.HsdpaIubZeroCapacityAlloc.RabPsIBHsdpa

Source Section

FddCell

HsdpaIubZeroCapacityAllocRabPsStrHsdpa

Counts the total number of capacity allocation frames sent by NodeB with zero grant. (RabPsStrHsdpa)

Data Source

RNC C-Node

Source Field

VS.HsdpaIubZeroCapacityAlloc.RabPsStrHsdpa

Source Section

FddCell

HsdpaIuRelAbnormalCACReject

Number of Iu release requested for HSDPA call. May happen after HSDPA credit allocation protocol error, a CAC reject during mobility phase or another failure during mobility phase. (CACReject)

Data Source

RNC C-Node

Source Field

VS.HsdpaIuRelAbnormal.CACReject

Source Section

FddCell

HsdpaIuRelAbnormalCreditAllocProtErr

Number of Iu release requested for HSDPA call. May happen after HSDPA credit allocation protocol error, a CAC reject during mobility phase or another failure during mobility phase. (CreditAllocProtErr)

Data Source

RNC C-Node

Source Field

VS.HsdpaIuRelAbnormal.CreditAllocProtErr

Source Section

FddCell

HsdpaIuRelAbnormalMobilityFailure

Number of Iu release requested for HSDPA call. May happen after HSDPA credit allocation protocol error, a CAC reject during mobility phase or another failure during mobility phase. (MobilityFailure)

Data Source

RNC C-Node

Source Field

VS.HsdpaIuRelAbnormal.MobilityFailure

Source Section

FddCell

HsdpaMobilitySuccessHsdpaToHsdpa

Number of successful HSDPA mobility: 1) HSDPA Cell to HSDPA Cell, 2) R99 Cell to HSDPA Cell, 3) HSDPA Cell to R99 Cell. Reference Cell is new primary cell of call. (HsdpaToHsdpa)

Data Source

RNC C-Node

Source Field

VS.HsdpaMobilitySuccess.HsdpaToHsdpa

Source Section

FddCell

HsdpaMobilitySuccessHsdpaToHsdpaInterFreq

Number of successful HSDPA mobility: 1) HSDPA Cell to HSDPA Cell, 2) R99 Cell to HSDPA Cell, 3) HSDPA Cell to R99 Cell. Reference Cell is new primary cell of call. (HsdpaToHsdpaInterFreq)

Data Source

RNC C-Node

Source Field

VS.HsdpaMobilitySuccess.HsdpaToHsdpaInterFreq

Source Section

FddCell

HsdpaMobilitySuccessHsdpaToNonHsdpa

Number of successful HSDPA mobility: 1) HSDPA Cell to HSDPA Cell, 2) R99 Cell to HSDPA Cell, 3) HSDPA Cell to R99 Cell. Reference Cell is new primary cell of call. (HsdpaToNonHsdpa)

Data Source

RNC C-Node

Source Field

VS.HsdpaMobilitySuccess.HsdpaToNonHsdpa

Source Section

FddCell

HsdpaMobilitySuccessHsdpaToNonHsdpaInterFreq

Number of successful HSDPA mobility: 1) HSDPA Cell to HSDPA Cell, 2) R99 Cell to HSDPA Cell, 3) HSDPA Cell to R99 Cell. Reference Cell is new primary cell of call. (HsdpaToNonHsdpaInterFreq)

Data Source

RNC C-Node

Source Field

VS.HsdpaMobilitySuccess.HsdpaToNonHsdpaInterFreq

Source Section

FddCell

HsdpaMobilitySuccessNonHsdpaToHsdpa

Number of successful HSDPA mobility: 1) HSDPA Cell to HSDPA Cell, 2) R99 Cell to HSDPA Cell, 3) HSDPA Cell to R99 Cell. Reference Cell is new primary cell of call. (NonHsdpaToHsdpa)

Data Source

RNC C-Node

Source Field

VS.HsdpaMobilitySuccess.NonHsdpaToHsdpa

Source Section

FddCell

HsdpaMobilitySuccessNonHsdpaToHsdpaInterFreq

Number of successful HSDPA mobility: 1) HSDPA Cell to HSDPA Cell, 2) R99 Cell to HSDPA Cell, 3) HSDPA Cell to R99 Cell. Reference Cell is new primary cell of call. (NonHsdpaToHsdpaInterFreq)

Data Source

RNC C-Node

Source Field

VS.HsdpaMobilitySuccess.NonHsdpaToHsdpaInterFreq

Source Section

FddCell

HsdpaMobilityUnsuccessfulHsdpaToHsdpa

Number of unsuccessful HSDPA mobility: 1) HSDPA Cell to HSDPA Cell, 2) R99 Cell to HSDPA Cell, 3) HSDPA Cell to R99 Cell. Reference Cell is new primary cell of call. (HsdpaToHsdpa)

Data Source

RNC C-Node

Source Field

VS.HsdpaMobilityUnsuccessful.HsdpaToHsdpa

Source Section

FddCell

HsdpaMobilityUnsuccessfulHsdpaToHsdpaInterFreq

Number of unsuccessful HSDPA mobility: 1) HSDPA Cell to HSDPA Cell, 2) R99 Cell to HSDPA Cell, 3) HSDPA Cell to R99 Cell. Reference Cell is new primary cell of call. (HsdpaToHsdpaInterFreq)

Data Source

RNC C-Node

Source Field

VS.HsdpaMobilityUnsuccessful.HsdpaToHsdpaInterFreq

Source Section

FddCell

HsdpaMobilityUnsuccessfulHsdpaToNonHsdpa

Number of unsuccessful HSDPA mobility: 1) HSDPA Cell to HSDPA Cell, 2) R99 Cell to HSDPA Cell, 3) HSDPA Cell to R99 Cell. Reference Cell is new primary cell of call. (HsdpaToNonHsdpa)

Data Source

RNC C-Node

Source Field

VS.HsdpaMobilityUnsuccessful.HsdpaToNonHsdpa

Source Section

FddCell

HsdpaMobilityUnsuccessfulHsdpaToNonHsdpaInterFreq

Number of unsuccessful HSDPA mobility: 1) HSDPA Cell to HSDPA Cell, 2) R99 Cell to HSDPA Cell, 3) HSDPA Cell to R99 Cell. Reference Cell is new primary cell of call. (HsdpaToNonHsdpaInterFreq)

Data Source

RNC C-Node

Source Field

VS.HsdpaMobilityUnsuccessful.HsdpaToNonHsdpaInterFreq

Source Section

FddCell

HsdpaMobilityUnsuccessfulNonHsdpaToHsdpa

Number of unsuccessful HSDPA mobility: 1) HSDPA Cell to HSDPA Cell, 2) R99 Cell to HSDPA Cell, 3) HSDPA Cell to R99 Cell. Reference Cell is new primary cell of call. (NonHsdpaToHsdpa)

Data Source

RNC C-Node

Source Field

VS.HsdpaMobilityUnsuccessful.NonHsdpaToHsdpa

Source Section

FddCell

HsdpaMobilityUnsuccessfulNonHsdpaToHsdpaInterFreq

Number of unsuccessful HSDPA mobility: 1) HSDPA Cell to HSDPA Cell, 2) R99 Cell to HSDPA Cell, 3) HSDPA Cell to R99 Cell. Reference Cell is new primary cell of call. (NonHsdpaToHsdpaInterFreq)

Data Source

RNC C-Node

Source Field

VS.HsdpaMobilityUnsuccessful.NonHsdpaToHsdpaInterFreq

Source Section

FddCell

HsdpaToDCHSuccRABRelease

Number of successful HSDPA to DCH transition. Counter is meaningless when feature PM 29797 Multi-service on HSDPA is enabled (RABRelease)

Data Source

RNC C-Node

Source Field

VS.HsdpaToDCHSucc.RABRelease

Source Section

FddCell

HsdpaToDCHSuccRABSetup

Number of successful HSDPA to DCH transition. Counter is meaningless when feature PM 29797 Multi-service on HSDPA is enabled (RABSetup)

Data Source

RNC C-Node

Source Field

VS.HsdpaToDCHSucc.RABSetup

Source Section

FddCell

HsdpaToDCHUnsuccessfulRABRelease

Number of unsuccessful HSDPA to DCH transition. Counter is meaningless when feature PM 29797 Multi-service on HSDPA is enabled (RABRelease)

Data Source

RNC C-Node

Source Field

VS.HsdpaToDCHUnsuccessful.RABRelease

Source Section

FddCell

HsdpaToDCHUnsuccessfulRABSetup

Number of unsuccessful HSDPA to DCH transition. Counter is meaningless when feature PM 29797 Multi-service on HSDPA is enabled (RABSetup)

Data Source

RNC C-Node

Source Field

VS.HsdpaToDCHUnsuccessful.RABSetup

Source Section

FddCell

HsdschRlcSduDiscardReestab

Indicates the amount of discarded SDUs (Kbytes) due to RLC re-establishment over collection period. (HsdschRlcSduDiscardReestab)

Data Source

RNC C-Node

Source Field

VS.HsdschRlcSduDiscardReestab

Source Section

FddCell

HsPdschDynCodeMgmtRealloc

After activation of the feature called HSDPA dynamic downlink code tree management and for a particular cell, this is the number of times the reallocation of OVSF SFx codes for HS-PDSCH is requested and successful (HsPdschDynCodeMgmtRealloc)

Data Source

RNC C-Node

Source Field

VS.HsPdschDynCodeMgmtRealloc

Source Section

FddCell

HsPdschDynCodeMgmtStealing

After activation of the feature called HSDPA dynamic downlink code tree management and for a particular cell, this is the number of times the stealing of OVSF SFx codes for DCH is requested and successful (HsPdschDynCodeMgmtStealing)

Data Source

RNC C-Node

Source Field

VS.HsPdschDynCodeMgmtStealing

Source Section

FddCell

ImctaRbSetupSuccIncomingRefCellTgtCallCsData

Number of incoming Radio Bearer setup successfully after RAB addition CAC failure triggered IMCTA.Incremented on the new reference cell on new carrier (i.e., target cell). (TgtCallCsData)

Data Source

RNC C-Node

Source Field

VS.ImctaRbSetupSuccIncomingRefCell.TgtCallCsData

Source Section

FddCell

ImctaRbSetupSuccIncomingRefCellTgtCallCsSpeechNbLrAmr

Number of incoming Radio Bearer setup successfully after RAB addition CAC failure triggered IMCTA.Incremented on the new reference cell on new carrier (i.e., target cell). (TgtCallCsSpeechNbLrAmr)

Data Source

RNC C-Node

Source Field

VS.ImctaRbSetupSuccIncomingRefCell.TgtCallCsSpeechNbLrAmr

Source Section

FddCell

ImctaRbSetupSuccIncomingRefCellTgtCallCsSpeechWbAmr

Number of incoming Radio Bearer setup successfully after RAB addition CAC failure triggered IMCTA.Incremented on the new reference cell on new carrier (i.e., target cell). (TgtCallCsSpeechWbAmr)

Data Source

RNC C-Node

Source Field

VS.ImctaRbSetupSuccIncomingRefCell.TgtCallCsSpeechWbAmr

Source Section

FddCell

ImctaRbSetupSuccIncomingRefCellTgtCallCsStr

Number of incoming Radio Bearer setup successfully after RAB addition CAC failure triggered IMCTA.Incremented on the new reference cell on new carrier (i.e., target cell). (TgtCallCsStr)

Data Source

RNC C-Node

Source Field

VS.ImctaRbSetupSuccIncomingRefCell.TgtCallCsStr

Source Section

FddCell

ImctaRbSetupSuccIncomingRefCellTgtCallHsdpaEdch

Number of incoming Radio Bearer setup successfully after RAB addition CAC failure triggered IMCTA.Incremented on the new reference cell on new carrier (i.e., target cell). (TgtCallHsdpaEdch)

Data Source

RNC C-Node

Source Field

VS.ImctaRbSetupSuccIncomingRefCell.TgtCallHsdpaEdch

Source Section

FddCell

ImctaRbSetupSuccIncomingRefCellTgtCallHsdpaR99

Number of incoming Radio Bearer setup successfully after RAB addition CAC failure triggered IMCTA.Incremented on the new reference cell on new carrier (i.e., target cell). (TgtCallHsdpaR99)

Data Source

RNC C-Node

Source Field

VS.ImctaRbSetupSuccIncomingRefCell.TgtCallHsdpaR99

Source Section

FddCell

ImctaRbSetupSuccIncomingRefCellTgtCallOther

Number of incoming Radio Bearer setup successfully after RAB addition CAC failure triggered IMCTA.Incremented on the new reference cell on new carrier (i.e., target cell). (TgtCallOther)

Data Source

RNC C-Node

Source Field

VS.ImctaRbSetupSuccIncomingRefCell.TgtCallOther

Source Section

FddCell

ImctaRbSetupSuccIncomingRefCellTgtCallPsIb128

Number of incoming Radio Bearer setup successfully after RAB addition CAC failure triggered IMCTA.Incremented on the new reference cell on new carrier (i.e., target cell). (TgtCallPsIb128)

Data Source

RNC C-Node

Source Field

VS.ImctaRbSetupSuccIncomingRefCell.TgtCallPsIb128

Source Section

FddCell

ImctaRbSetupSuccIncomingRefCellTgtCallPsIb256

Number of incoming Radio Bearer setup successfully after RAB addition CAC failure triggered IMCTA.Incremented on the new reference cell on new carrier (i.e., target cell). (TgtCallPsIb256)

Data Source

RNC C-Node

Source Field

VS.ImctaRbSetupSuccIncomingRefCell.TgtCallPsIb256

Source Section

FddCell

ImctaRbSetupSuccIncomingRefCellTgtCallPsIb384

Number of incoming Radio Bearer setup successfully after RAB addition CAC failure triggered IMCTA.Incremented on the new reference cell on new carrier (i.e., target cell). (TgtCallPsIb384)

Data Source

RNC C-Node

Source Field

VS.ImctaRbSetupSuccIncomingRefCell.TgtCallPsIb384

Source Section

FddCell

ImctaRbSetupSuccIncomingRefCellTgtCallPsIb64

Number of incoming Radio Bearer setup successfully after RAB addition CAC failure triggered IMCTA.Incremented on the new reference cell on new carrier (i.e., target cell). (TgtCallPsIb64)

Data Source

RNC C-Node

Source Field

VS.ImctaRbSetupSuccIncomingRefCell.TgtCallPsIb64

Source Section

FddCell

ImctaRbSetupSuccIncomingRefCellTgtCallPsIbLt64

Number of incoming Radio Bearer setup successfully after RAB addition CAC failure triggered IMCTA.Incremented on the new reference cell on new carrier (i.e., target cell). (TgtCallPsIbLt64)

Data Source

RNC C-Node

Source Field

VS.ImctaRbSetupSuccIncomingRefCell.TgtCallPsIbLt64

Source Section

FddCell

ImctaRbSetupSuccIncomingRefCellTgtCallPsStr128

Number of incoming Radio Bearer setup successfully after RAB addition CAC failure triggered IMCTA.Incremented on the new reference cell on new carrier (i.e., target cell). (TgtCallPsStr128)

Data Source

RNC C-Node

Source Field

VS.ImctaRbSetupSuccIncomingRefCell.TgtCallPsStr128

Source Section

FddCell

ImctaRbSetupSuccIncomingRefCellTgtCallPsStr256

Number of incoming Radio Bearer setup successfully after RAB addition CAC failure triggered IMCTA.Incremented on the new reference cell on new carrier (i.e., target cell). (TgtCallPsStr256)

Data Source

RNC C-Node

Source Field

VS.ImctaRbSetupSuccIncomingRefCell.TgtCallPsStr256

Source Section

FddCell

ImctaRbSetupSuccIncomingRefCellTgtCallPsStr384

Number of incoming Radio Bearer setup successfully after RAB addition CAC failure triggered IMCTA.Incremented on the new reference cell on new carrier (i.e., target cell). (TgtCallPsStr384)

Data Source

RNC C-Node

Source Field

VS.ImctaRbSetupSuccIncomingRefCell.TgtCallPsStr384

Source Section

FddCell

ImctaRbSetupSuccIncomingRefCellTgtCallPsStr64

Number of incoming Radio Bearer setup successfully after RAB addition CAC failure triggered IMCTA.Incremented on the new reference cell on new carrier (i.e., target cell). (TgtCallPsStr64)

Data Source

RNC C-Node

Source Field

VS.ImctaRbSetupSuccIncomingRefCell.TgtCallPsStr64

Source Section

FddCell

ImctaRbSetupSuccIncomingRefCellTgtCallPsStrLt64

Number of incoming Radio Bearer setup successfully after RAB addition CAC failure triggered IMCTA.Incremented on the new reference cell on new carrier (i.e., target cell). (TgtCallPsStrLt64)

Data Source

RNC C-Node

Source Field

VS.ImctaRbSetupSuccIncomingRefCell.TgtCallPsStrLt64

Source Section

FddCell

ImctaRbSetupSuccOutgoingRefCellTgtCallCsData

Number of outgoing Radio Bearers setup successfully after RAB addition CAC failure triggered IMCTA. Incremented on the reference cell on previous carrier (i.e. the source cell). (TgtCallCsData)

Data Source

RNC C-Node

Source Field

VS.ImctaRbSetupSuccOutgoingRefCell.TgtCallCsData

Source Section

FddCell

ImctaRbSetupSuccOutgoingRefCellTgtCallCsSpeechNbLrAmr

Number of outgoing Radio Bearers setup successfully after RAB addition CAC failure triggered IMCTA. Incremented on the reference cell on previous carrier (i.e. the source cell). (TgtCallCsSpeechNbLrAmr)

Data Source

RNC C-Node

Source Field

VS.ImctaRbSetupSuccOutgoingRefCell.TgtCallCsSpeechNbLrAmr

Source Section

FddCell

ImctaRbSetupSuccOutgoingRefCellTgtCallCsSpeechWbAmr

Number of outgoing Radio Bearers setup successfully after RAB addition CAC failure triggered IMCTA. Incremented on the reference cell on previous carrier (i.e. the source cell). (TgtCallCsSpeechWbAmr)

Data Source

RNC C-Node

Source Field

VS.ImctaRbSetupSuccOutgoingRefCell.TgtCallCsSpeechWbAmr

Source Section

FddCell

ImctaRbSetupSuccOutgoingRefCellTgtCallCsStr

Number of outgoing Radio Bearers setup successfully after RAB addition CAC failure triggered IMCTA. Incremented on the reference cell on previous carrier (i.e. the source cell). (TgtCallCsStr)

Data Source

RNC C-Node

Source Field

VS.ImctaRbSetupSuccOutgoingRefCell.TgtCallCsStr

Source Section

FddCell

ImctaRbSetupSuccOutgoingRefCellTgtCallHsdpaEdch

Number of outgoing Radio Bearers setup successfully after RAB addition CAC failure triggered IMCTA. Incremented on the reference cell on previous carrier (i.e. the source cell). (TgtCallHsdpaEdch)

Data Source

RNC C-Node

Source Field

VS.ImctaRbSetupSuccOutgoingRefCell.TgtCallHsdpaEdch

Source Section

FddCell

ImctaRbSetupSuccOutgoingRefCellTgtCallHsdpaR99

Number of outgoing Radio Bearers setup successfully after RAB addition CAC failure triggered IMCTA. Incremented on the reference cell on previous carrier (i.e. the source cell). (TgtCallHsdpaR99)

Data Source

RNC C-Node

Source Field

VS.ImctaRbSetupSuccOutgoingRefCell.TgtCallHsdpaR99

Source Section

FddCell

ImctaRbSetupSuccOutgoingRefCellTgtCallOther

Number of outgoing Radio Bearers setup successfully after RAB addition CAC failure triggered IMCTA. Incremented on the reference cell on previous carrier (i.e. the source cell). (TgtCallOther)

Data Source

RNC C-Node

Source Field

VS.ImctaRbSetupSuccOutgoingRefCell.TgtCallOther

Source Section

FddCell

ImctaRbSetupSuccOutgoingRefCellTgtCallPsIb128

Number of outgoing Radio Bearers setup successfully after RAB addition CAC failure triggered IMCTA. Incremented on the reference cell on previous carrier (i.e. the source cell). (TgtCallPsIb128)

Data Source

RNC C-Node

Source Field

VS.ImctaRbSetupSuccOutgoingRefCell.TgtCallPsIb128

Source Section

FddCell

ImctaRbSetupSuccOutgoingRefCellTgtCallPsIb256

Number of outgoing Radio Bearers setup successfully after RAB addition CAC failure triggered IMCTA. Incremented on the reference cell on previous carrier (i.e. the source cell). (TgtCallPsIb256)

Data Source

RNC C-Node

Source Field

VS.ImctaRbSetupSuccOutgoingRefCell.TgtCallPsIb256

Source Section

FddCell

ImctaRbSetupSuccOutgoingRefCellTgtCallPsIb384

Number of outgoing Radio Bearers setup successfully after RAB addition CAC failure triggered IMCTA. Incremented on the reference cell on previous carrier (i.e. the source cell). (TgtCallPsIb384)

Data Source

RNC C-Node

Source Field

VS.ImctaRbSetupSuccOutgoingRefCell.TgtCallPsIb384

Source Section

FddCell

ImctaRbSetupSuccOutgoingRefCellTgtCallPsIb64

Number of outgoing Radio Bearers setup successfully after RAB addition CAC failure triggered IMCTA. Incremented on the reference cell on previous carrier (i.e. the source cell). (TgtCallPsIb64)

Data Source

RNC C-Node

Source Field

VS.ImctaRbSetupSuccOutgoingRefCell.TgtCallPsIb64

Source Section

FddCell

ImctaRbSetupSuccOutgoingRefCellTgtCallPsIbLt64

Number of outgoing Radio Bearers setup successfully after RAB addition CAC failure triggered IMCTA. Incremented on the reference cell on previous carrier (i.e. the source cell). (TgtCallPsIbLt64)

Data Source

RNC C-Node

Source Field

VS.ImctaRbSetupSuccOutgoingRefCell.TgtCallPsIbLt64

Source Section

FddCell

ImctaRbSetupSuccOutgoingRefCellTgtCallPsStr128

Number of outgoing Radio Bearers setup successfully after RAB addition CAC failure triggered IMCTA. Incremented on the reference cell on previous carrier (i.e. the source cell). (TgtCallPsStr128)

Data Source

RNC C-Node

Source Field

VS.ImctaRbSetupSuccOutgoingRefCell.TgtCallPsStr128

Source Section

FddCell

ImctaRbSetupSuccOutgoingRefCellTgtCallPsStr256

Number of outgoing Radio Bearers setup successfully after RAB addition CAC failure triggered IMCTA. Incremented on the reference cell on previous carrier (i.e. the source cell). (TgtCallPsStr256)

Data Source

RNC C-Node

Source Field

VS.ImctaRbSetupSuccOutgoingRefCell.TgtCallPsStr256

Source Section

FddCell

ImctaRbSetupSuccOutgoingRefCellTgtCallPsStr384

Number of outgoing Radio Bearers setup successfully after RAB addition CAC failure triggered IMCTA. Incremented on the reference cell on previous carrier (i.e. the source cell). (TgtCallPsStr384)

Data Source

RNC C-Node

Source Field

VS.ImctaRbSetupSuccOutgoingRefCell.TgtCallPsStr384

Source Section

FddCell

ImctaRbSetupSuccOutgoingRefCellTgtCallPsStr64

Number of outgoing Radio Bearers setup successfully after RAB addition CAC failure triggered IMCTA. Incremented on the reference cell on previous carrier (i.e. the source cell). (TgtCallPsStr64)

Data Source

RNC C-Node

Source Field

VS.ImctaRbSetupSuccOutgoingRefCell.TgtCallPsStr64

Source Section

FddCell

ImctaRbSetupSuccOutgoingRefCellTgtCallPsStrLt64

Number of outgoing Radio Bearers setup successfully after RAB addition CAC failure triggered IMCTA. Incremented on the reference cell on previous carrier (i.e. the source cell). (TgtCallPsStrLt64)

Data Source

RNC C-Node

Source Field

VS.ImctaRbSetupSuccOutgoingRefCell.TgtCallPsStrLt64

Source Section

FddCell

IncomInterFreqHoAttNoRsrcAvailCacFailure

Number of Hard Handovers attempted to this cell located on Serving RNC from another cell on a different frequency from the same RNC (NoRsrcAvailCacFailure)

Data Source

RNC C-Node

Source Field

VS.IncomInterFreqHoAtt.NoRsrcAvailCacFailure

Source Section

FddCell

IncomInterFreqHoAttRescue

Number of Hard Handovers attempted to this cell located on Serving RNC from another cell on a different frequency from the same RNC (Rescue)

Data Source

RNC C-Node

Source Field

VS.IncomInterFreqHoAtt.Rescue

Source Section

FddCell

IncomInterFreqHoAttService

Number of Hard Handovers attempted to this cell located on Serving RNC from another cell on a different frequency from the same RNC (Service)

Data Source

RNC C-Node

Source Field

VS.IncomInterFreqHoAtt.Service

Source Section

FddCell

IncomInterFreqHoSucNoRsrcAvailCacFailure

Number of successful Hard Handovers to this cell located on Serving RNC from another cell on a different frequency from the same RNC (NoRsrcAvailCacFailure)

Data Source

RNC C-Node

Source Field

VS.IncomInterFreqHoSuc.NoRsrcAvailCacFailure

Source Section

FddCell

IncomInterFreqHoSucRescue

Number of successful Hard Handovers to this cell located on Serving RNC from another cell on a different frequency from the same RNC (Rescue)

Data Source

RNC C-Node

Source Field

VS.IncomInterFreqHoSuc.Rescue

Source Section

FddCell

IncomInterFreqHoSucService

Number of successful Hard Handovers to this cell located on Serving RNC from another cell on a different frequency from the same RNC (Service)

Data Source

RNC C-Node

Source Field

VS.IncomInterFreqHoSuc.Service

Source Section

FddCell

InterFrequencyHoTrigByAlarmCpichEcNo

Number of inter-frequency handovers with a reference cell for which the RNC is serving and the handover has been initiated because of Alarm criteria hit (CpichEcNo)

Data Source

RNC C-Node

Source Field

VS.InterFrequencyHoTrigByAlarm.CpichEcNo

Source Section

FddCell

InterFrequencyHoTrigByAlarmCpichRscp

Number of inter-frequency handovers with a reference cell for which the RNC is serving and the handover has been initiated because of Alarm criteria hit (CpichRscp)

Data Source

RNC C-Node

Source Field

VS.InterFrequencyHoTrigByAlarm.CpichRscp

Source Section

FddCell

InterFrequencyHoTrigByAlarmUeTxPowerMax

Number of inter-frequency handovers with a reference cell for which the RNC is serving and the handover has been initiated because of Alarm criteria hit (UeTxPowerMax)

Data Source

RNC C-Node

Source Field

VS.InterFrequencyHoTrigByAlarm.UeTxPowerMax

Source Section

FddCell

InterPlmnOutgoingHardHoAttemptInterFreqTimeCriticalRelocation

Number of attempted outgoing relocation toward another PLMN (InterFreqTimeCriticalRelocation)

Data Source

RNC C-Node

Source Field

VS.InterPlmnOutgoingHardHoAttempt.InterFreqTimeCriticalRelocation

Source Section

FddCell

InterPlmnOutgoingHardHoAttemptIntraFreqTimeCriticalRelocation

Number of attempted outgoing relocation toward another PLMN (IntraFreqTimeCriticalRelocation)

Data Source

RNC C-Node

Source Field

VS.InterPlmnOutgoingHardHoAttempt.IntraFreqTimeCriticalRelocation

Source Section

FddCell

InterPlmnOutgoingHardHoAttemptNoRscrAvailReloc

Number of attempted outgoing relocation toward another PLMN (NoRscrAvailReloc)

Data Source

RNC C-Node

Source Field

VS.InterPlmnOutgoingHardHoAttempt.NoRscrAvailReloc

Source Section

FddCell

InterPlmnOutgoingHardHoAttemptServiceReloc

Number of attempted outgoing relocation toward another PLMN (ServiceReloc)

Data Source

RNC C-Node

Source Field

VS.InterPlmnOutgoingHardHoAttempt.ServiceReloc

Source Section

FddCell

InterPlmnOutgoingHardHoFailureInterFreqFailureInRadioProcedures

Number of failed outgoing hard HOs to an RNC in a different PLMN (InterFreqFailureInRadioProcedures)

Data Source

RNC C-Node

Source Field

VS.InterPlmnOutgoingHardHoFailure.InterFreqFailureInRadioProcedures

Source Section

FddCell

InterPlmnOutgoingHardHoFailureInterFreqFailureInRelocationProcedures0

Number of failed outgoing hard HOs to an RNC in a different PLMN (InterFreqFailureInRelocationProcedures0)

Data Source

RNC C-Node

Source Field

VS.InterPlmnOutgoingHardHoFailure.InterFreqFailureInRelocationProcedures0

Source Section

FddCell

InterPlmnOutgoingHardHoFailureInterFreqFailureInRelocationProcedures1

Number of failed outgoing hard HOs to an RNC in a different PLMN (InterFreqFailureInRelocationProcedures1)

Data Source

RNC C-Node

Source Field

VS.InterPlmnOutgoingHardHoFailure.InterFreqFailureInRelocationProcedures1

Source Section

FddCell

InterPlmnOutgoingHardHoFailureInterFreqFailureInRncProcedures

Number of failed outgoing hard HOs to an RNC in a different PLMN (InterFreqFailureInRncProcedures)

Data Source

RNC C-Node

Source Field

VS.InterPlmnOutgoingHardHoFailure.InterFreqFailureInRncProcedures

Source Section

FddCell

InterPlmnOutgoingHardHoFailureInterFreqUnexpectedCase

Number of failed outgoing hard HOs to an RNC in a different PLMN (InterFreqUnexpectedCase)

Data Source

RNC C-Node

Source Field

VS.InterPlmnOutgoingHardHoFailure.InterFreqUnexpectedCase

Source Section

FddCell

InterPlmnOutgoingHardHoFailureIntraFreqFailureInRadioProcedures

Number of failed outgoing hard HOs to an RNC in a different PLMN (IntraFreqFailureInRadioProcedures)

Data Source

RNC C-Node

Source Field

VS.InterPlmnOutgoingHardHoFailure.IntraFreqFailureInRadioProcedures

Source Section

FddCell

InterPlmnOutgoingHardHoFailureIntraFreqFailureInRelocationProcedures0

Number of failed outgoing hard HOs to an RNC in a different PLMN (IntraFreqFailureInRelocationProcedures0)

Data Source

RNC C-Node

Source Field

VS.InterPlmnOutgoingHardHoFailure.IntraFreqFailureInRelocationProcedures0

Source Section

FddCell

InterPlmnOutgoingHardHoFailureIntraFreqFailureInRelocationProcedures1

Number of failed outgoing hard HOs to an RNC in a different PLMN (IntraFreqFailureInRelocationProcedures1)

Data Source

RNC C-Node

Source Field

VS.InterPlmnOutgoingHardHoFailure.IntraFreqFailureInRelocationProcedures1

Source Section

FddCell

InterPlmnOutgoingHardHoFailureIntraFreqFailureInRncProcedures

Number of failed outgoing hard HOs to an RNC in a different PLMN (IntraFreqFailureInRncProcedures)

Data Source

RNC C-Node

Source Field

VS.InterPlmnOutgoingHardHoFailure.IntraFreqFailureInRncProcedures

Source Section

FddCell

InterPlmnOutgoingHardHoFailureIntraFreqUnexpectedCase

Number of failed outgoing hard HOs to an RNC in a different PLMN (IntraFreqUnexpectedCase)

Data Source

RNC C-Node

Source Field

VS.InterPlmnOutgoingHardHoFailure.IntraFreqUnexpectedCase

Source Section

FddCell

InterPlmnOutgoingHardHoSuccessInterFreqTimeCriticalRelocation

Number of successful Hard Handovers to an RNC in a different PLMN (InterFreqTimeCriticalRelocation)

Data Source

RNC C-Node

Source Field

VS.InterPlmnOutgoingHardHoSuccess.InterFreqTimeCriticalRelocation

Source Section

FddCell

InterPlmnOutgoingHardHoSuccessIntraFreqTimeCriticalRelocation

Number of successful Hard Handovers to an RNC in a different PLMN (IntraFreqTimeCriticalRelocation)

Data Source

RNC C-Node

Source Field

VS.InterPlmnOutgoingHardHoSuccess.IntraFreqTimeCriticalRelocation

Source Section

FddCell

InterPlmnOutgoingHardHoSuccessNoRscrAvailReloc

Number of successful Hard Handovers to an RNC in a different PLMN (NoRscrAvailReloc)

Data Source

RNC C-Node

Source Field

VS.InterPlmnOutgoingHardHoSuccess.NoRscrAvailReloc

Source Section

FddCell

InterPlmnOutgoingHardHoSuccessServiceReloc

Number of successful Hard Handovers to an RNC in a different PLMN (ServiceReloc)

Data Source

RNC C-Node

Source Field

VS.InterPlmnOutgoingHardHoSuccess.ServiceReloc

Source Section

FddCell

InterRncWithoutIurOutgoingHardHoAttemptInterFreqTimeCriticalRelocation

Number of attempted outgoing relocation to another RNC in the same PLMN, which is not connected by an Iur link. (InterFreqTimeCriticalRelocation)

Data Source

RNC C-Node

Source Field

VS.InterRncWithoutIurOutgoingHardHoAttempt.InterFreqTimeCriticalRelocation

Source Section

FddCell

InterRncWithoutIurOutgoingHardHoAttemptIntraFreqTimeCriticalRelocation

Number of attempted outgoing relocation to another RNC in the same PLMN, which is not connected by an Iur link. (IntraFreqTimeCriticalRelocation)

Data Source

RNC C-Node

Source Field

VS.InterRncWithoutIurOutgoingHardHoAttempt.IntraFreqTimeCriticalRelocation

Source Section

FddCell

InterRncWithoutIurOutgoingHardHoAttemptNoRscrAvailReloc

Number of attempted outgoing relocation to another RNC in the same PLMN, which is not connected by an Iur link. (NoRscrAvailReloc)

Data Source

RNC C-Node

Source Field

VS.InterRncWithoutIurOutgoingHardHoAttempt.NoRscrAvailReloc

Source Section

FddCell

InterRncWithoutIurOutgoingHardHoAttemptServiceReloc

Number of attempted outgoing relocation to another RNC in the same PLMN, which is not connected by an Iur link. (ServiceReloc)

Data Source

RNC C-Node

Source Field

VS.InterRncWithoutIurOutgoingHardHoAttempt.ServiceReloc

Source Section

FddCell

InterRncWithoutIurOutgoingHardHoFailureInterFreqFailureInRadioProcedures

Number of failed outgoing hard HOs to an RNC in the same PLMN, which is not connected by an Iur link. (InterFreqFailureInRadioProcedures)

Data Source

RNC C-Node

Source Field

VS.InterRncWithoutIurOutgoingHardHoFailure.InterFreqFailureInRadioProcedures

Source Section

FddCell

InterRncWithoutIurOutgoingHardHoFailureInterFreqFailureInRelocationProcedures0

Number of failed outgoing hard HOs to an RNC in the same PLMN, which is not connected by an Iur link. (InterFreqFailureInRelocationProcedures0)

Data Source

RNC C-Node

Source Field

VS.InterRncWithoutIurOutgoingHardHoFailure.InterFreqFailureInRelocationProcedures0

Source Section

FddCell

InterRncWithoutIurOutgoingHardHoFailureInterFreqFailureInRelocationProcedures1

Number of failed outgoing hard HOs to an RNC in the same PLMN, which is not connected by an Iur link. (InterFreqFailureInRelocationProcedures1)

Data Source

RNC C-Node

Source Field

VS.InterRncWithoutIurOutgoingHardHoFailure.InterFreqFailureInRelocationProcedures1

Source Section

FddCell

InterRncWithoutIurOutgoingHardHoFailureInterFreqFailureInRncProcedures

Number of failed outgoing hard HOs to an RNC in the same PLMN, which is not connected by an Iur link. (InterFreqFailureInRncProcedures)

Data Source

RNC C-Node

Source Field

VS.InterRncWithoutIurOutgoingHardHoFailure.InterFreqFailureInRncProcedures

Source Section

FddCell

InterRncWithoutIurOutgoingHardHoFailureInterFreqUnexpectedCase

Number of failed outgoing hard HOs to an RNC in the same PLMN, which is not connected by an Iur link. (InterFreqUnexpectedCase)

Data Source

RNC C-Node

Source Field

VS.InterRncWithoutIurOutgoingHardHoFailure.InterFreqUnexpectedCase

Source Section

FddCell

InterRncWithoutIurOutgoingHardHoFailureIntraFreqFailureInRadioProcedures

Number of failed outgoing hard HOs to an RNC in the same PLMN, which is not connected by an Iur link. (IntraFreqFailureInRadioProcedures)

Data Source

RNC C-Node

Source Field

VS.InterRncWithoutIurOutgoingHardHoFailure.IntraFreqFailureInRadioProcedures

Source Section

FddCell

InterRncWithoutIurOutgoingHardHoFailureIntraFreqFailureInRelocationProcedures0

Number of failed outgoing hard HOs to an RNC in the same PLMN, which is not connected by an Iur link. (IntraFreqFailureInRelocationProcedures0)

Data Source

RNC C-Node

Source Field

VS.InterRncWithoutIurOutgoingHardHoFailure.IntraFreqFailureInRelocationProcedures0

Source Section

FddCell

InterRncWithoutIurOutgoingHardHoFailureIntraFreqFailureInRelocationProcedures1

Number of failed outgoing hard HOs to an RNC in the same PLMN, which is not connected by an Iur link. (IntraFreqFailureInRelocationProcedures1)

Data Source

RNC C-Node

Source Field

VS.InterRncWithoutIurOutgoingHardHoFailure.IntraFreqFailureInRelocationProcedures1

Source Section

FddCell

InterRncWithoutIurOutgoingHardHoFailureIntraFreqFailureInRncProcedures

Number of failed outgoing hard HOs to an RNC in the same PLMN, which is not connected by an Iur link. (IntraFreqFailureInRncProcedures)

Data Source

RNC C-Node

Source Field

VS.InterRncWithoutIurOutgoingHardHoFailure.IntraFreqFailureInRncProcedures

Source Section

FddCell

InterRncWithoutIurOutgoingHardHoFailureIntraFreqUnexpectedCase

Number of failed outgoing hard HOs to an RNC in the same PLMN, which is not connected by an Iur link. (IntraFreqUnexpectedCase)

Data Source

RNC C-Node

Source Field

VS.InterRncWithoutIurOutgoingHardHoFailure.IntraFreqUnexpectedCase

Source Section

FddCell

InterRncWithoutIurOutgoingHardHoSuccessInterFreqTimeCriticalRelocation

Number of successful Hard Handovers to an RNC in the same PLMN, without an Iur link. (InterFreqTimeCriticalRelocation)

Data Source

RNC C-Node

Source Field

VS.InterRncWithoutIurOutgoingHardHoSuccess.InterFreqTimeCriticalRelocation

Source Section

FddCell

InterRncWithoutIurOutgoingHardHoSuccessIntraFreqTimeCriticalRelocation

Number of successful Hard Handovers to an RNC in the same PLMN, without an Iur link. (IntraFreqTimeCriticalRelocation)

Data Source

RNC C-Node

Source Field

VS.InterRncWithoutIurOutgoingHardHoSuccess.IntraFreqTimeCriticalRelocation

Source Section

FddCell

InterRncWithoutIurOutgoingHardHoSuccessNoRscrAvailReloc

Number of successful Hard Handovers to an RNC in the same PLMN, without an Iur link. (NoRscrAvailReloc)

Data Source

RNC C-Node

Source Field

VS.InterRncWithoutIurOutgoingHardHoSuccess.NoRscrAvailReloc

Source Section

FddCell

InterRncWithoutIurOutgoingHardHoSuccessServiceReloc

Number of successful Hard Handovers to an RNC in the same PLMN, without an Iur link. (ServiceReloc)

Data Source

RNC C-Node

Source Field

VS.InterRncWithoutIurOutgoingHardHoSuccess.ServiceReloc

Source Section

FddCell

IntraFreqMeasAverageOfCallEventModeCellAvg

Average of Call in event mode over a period within a cell (Avg)

Data Source

RNC C-Node

Source Field

VS.IntraFreqMeasAverageOfCallEventModeCell.Avg

Source Section

FddCell

IntraFreqMeasAverageOfCallEventModeCellCum

Average of Call in event mode over a period within a cell (Cum)

Data Source

RNC C-Node

Source Field

VS.IntraFreqMeasAverageOfCallEventModeCell.Cum

Source Section

FddCell

IntraFreqMeasAverageOfCallEventModeCellMax

Average of Call in event mode over a period within a cell (Max)

Data Source

RNC C-Node

Source Field

VS.IntraFreqMeasAverageOfCallEventModeCell.Max

Source Section

FddCell

IntraFreqMeasAverageOfCallEventModeCellMin

Average of Call in event mode over a period within a cell (Min)

Data Source

RNC C-Node

Source Field

VS.IntraFreqMeasAverageOfCallEventModeCell.Min

Source Section

FddCell

IntraFreqMeasAverageOfCallEventModeCellNbEvt

Average of Call in event mode over a period within a cell (NbEvt)

Data Source

RNC C-Node

Source Field

VS.IntraFreqMeasAverageOfCallEventModeCell.NbEvt

Source Section

FddCell

IntraFreqMeasAverageOfCallPeriodicModeCellAvg

Average of Call in periodic mode over a period within a cell (Avg)

Data Source

RNC C-Node

Source Field

VS.IntraFreqMeasAverageOfCallPeriodicModeCell.Avg

Source Section

FddCell

IntraFreqMeasAverageOfCallPeriodicModeCellCum

Average of Call in periodic mode over a period within a cell (Cum)

Data Source

RNC C-Node

Source Field

VS.IntraFreqMeasAverageOfCallPeriodicModeCell.Cum

Source Section

FddCell

IntraFreqMeasAverageOfCallPeriodicModeCellMax

Average of Call in periodic mode over a period within a cell (Max)

Data Source

RNC C-Node

Source Field

VS.IntraFreqMeasAverageOfCallPeriodicModeCell.Max

Source Section

FddCell

IntraFreqMeasAverageOfCallPeriodicModeCellMin

Average of Call in periodic mode over a period within a cell (Min)

Data Source

RNC C-Node

Source Field

VS.IntraFreqMeasAverageOfCallPeriodicModeCell.Min

Source Section

FddCell

IntraFreqMeasAverageOfCallPeriodicModeCellNbEvt

Average of Call in periodic mode over a period within a cell (NbEvt)

Data Source

RNC C-Node

Source Field

VS.IntraFreqMeasAverageOfCallPeriodicModeCell.NbEvt

Source Section

FddCell

IntraRncIncInterFreqHoAttemptHoWithCmMeas

Number of Intra RNC Hard Handovers attempted to this cell from another cell in the same RNC on a different frequency. (HoWithCmMeas)

Data Source

RNC C-Node

Source Field

VS.IntraRncIncInterFreqHoAttempt.HoWithCmMeas

Source Section

FddCell

IntraRncIncInterFreqHoAttemptHoWithCmMeasInterBand

Number of Intra RNC Hard Handovers attempted to this cell from another cell in the same RNC on a different frequency. (HoWithCmMeasInterBand)

Data Source

RNC C-Node

Source Field

VS.IntraRncIncInterFreqHoAttempt.HoWithCmMeasInterBand

Source Section

FddCell

IntraRncIncInterFreqHoAttemptHsdpaMobToHsdpaLayer

Number of Intra RNC Hard Handovers attempted to this cell from another cell in the same RNC on a different frequency. (HsdpaMobToHsdpaLayer)

Data Source

RNC C-Node

Source Field

VS.IntraRncIncInterFreqHoAttempt.HsdpaMobToHsdpaLayer

Source Section

FddCell

IntraRncIncInterFreqHoAttemptHsdpaMobToNonHsdpaLayer

Number of Intra RNC Hard Handovers attempted to this cell from another cell in the same RNC on a different frequency. (HsdpaMobToNonHsdpaLayer)

Data Source

RNC C-Node

Source Field

VS.IntraRncIncInterFreqHoAttempt.HsdpaMobToNonHsdpaLayer

Source Section

FddCell

IntraRncIncInterFreqHoAttemptNonHsdpaMobToNonHsdpaLayer

Number of Intra RNC Hard Handovers attempted to this cell from another cell in the same RNC on a different frequency. (NonHsdpaMobToNonHsdpaLayer)

Data Source

RNC C-Node

Source Field

VS.IntraRncIncInterFreqHoAttempt.NonHsdpaMobToNonHsdpaLayer

Source Section

FddCell

IntraRncIncInterFreqHoFailHoWithCmMeasFailRRC

Number of Intra RNC Hard Handovers attempted to this cell from another using another frequency in the same RNC that failed to complete succesfully. (HoWithCmMeasFailRRC)

Data Source

RNC C-Node

Source Field

VS.IntraRncIncInterFreqHoFail.HoWithCmMeasFailRRC

Source Section

FddCell

IntraRncIncInterFreqHoFailHoWithCmMeasInterBand

Number of Intra RNC Hard Handovers attempted to this cell from another using another frequency in the same RNC that failed to complete succesfully. (HoWithCmMeasInterBand)

Data Source

RNC C-Node

Source Field

VS.IntraRncIncInterFreqHoFail.HoWithCmMeasInterBand

Source Section

FddCell

IntraRncIncInterFreqHoFailHoWithCmMeasNodeBFail

Number of Intra RNC Hard Handovers attempted to this cell from another using another frequency in the same RNC that failed to complete succesfully. (HoWithCmMeasNodeBFail)

Data Source

RNC C-Node

Source Field

VS.IntraRncIncInterFreqHoFail.HoWithCmMeasNodeBFail

Source Section

FddCell

IntraRncIncInterFreqHoFailHoWithCmMeasNoRsrc

Number of Intra RNC Hard Handovers attempted to this cell from another using another frequency in the same RNC that failed to complete succesfully. (HoWithCmMeasNoRsrc)

Data Source

RNC C-Node

Source Field

VS.IntraRncIncInterFreqHoFail.HoWithCmMeasNoRsrc

Source Section

FddCell

IntraRncIncInterFreqHoFailHoWithMeasFailRRC

Number of Intra RNC Hard Handovers attempted to this cell from another using another frequency in the same RNC that failed to complete succesfully. (HoWithMeasFailRRC)

Data Source

RNC C-Node

Source Field

VS.IntraRncIncInterFreqHoFail.HoWithMeasFailRRC

Source Section

FddCell

IntraRncIncInterFreqHoFailHoWithMeasNodeBFail

Number of Intra RNC Hard Handovers attempted to this cell from another using another frequency in the same RNC that failed to complete succesfully. (HoWithMeasNodeBFail)

Data Source

RNC C-Node

Source Field

VS.IntraRncIncInterFreqHoFail.HoWithMeasNodeBFail

Source Section

FddCell

IntraRncOutInterFreqHoAttemptHoWithCmMeas

Number of Intra RNC Hard Handovers attempted from this cell to another cell using another frequency in the same RNC. (HoWithCmMeas)

Data Source

RNC C-Node

Source Field

VS.IntraRncOutInterFreqHoAttempt.HoWithCmMeas

Source Section

FddCell

IntraRncOutInterFreqHoAttemptHoWithCmMeasInterBand

Number of Intra RNC Hard Handovers attempted from this cell to another cell using another frequency in the same RNC. (HoWithCmMeasInterBand)

Data Source

RNC C-Node

Source Field

VS.IntraRncOutInterFreqHoAttempt.HoWithCmMeasInterBand

Source Section

FddCell

IntraRncOutInterFreqHoAttemptHsdpaMobToHsdpaLayer

Number of Intra RNC Hard Handovers attempted from this cell to another cell using another frequency in the same RNC. (HsdpaMobToHsdpaLayer)

Data Source

RNC C-Node

Source Field

VS.IntraRncOutInterFreqHoAttempt.HsdpaMobToHsdpaLayer

Source Section

FddCell

IntraRncOutInterFreqHoAttemptHsdpaMobToNonHsdpaLayer

Number of Intra RNC Hard Handovers attempted from this cell to another cell using another frequency in the same RNC. (HsdpaMobToNonHsdpaLayer)

Data Source

RNC C-Node

Source Field

VS.IntraRncOutInterFreqHoAttempt.HsdpaMobToNonHsdpaLayer

Source Section

FddCell

IntraRncOutInterFreqHoAttemptNonHsdpaMobToNonHsdpaLayer

Number of Intra RNC Hard Handovers attempted from this cell to another cell using another frequency in the same RNC. (NonHsdpaMobToNonHsdpaLayer)

Data Source

RNC C-Node

Source Field

VS.IntraRncOutInterFreqHoAttempt.NonHsdpaMobToNonHsdpaLayer

Source Section

FddCell

IntraRncOutInterFreqHoFailHoWithCmMeasFailRRC

Number of Intra RNC Hard Handovers attempted from this cell to another cell using another frequency in the same RNC that failed to complete succesfully. (HoWithCmMeasFailRRC)

Data Source

RNC C-Node

Source Field

VS.IntraRncOutInterFreqHoFail.HoWithCmMeasFailRRC

Source Section

FddCell

IntraRncOutInterFreqHoFailHoWithCmMeasInterBand

Number of Intra RNC Hard Handovers attempted from this cell to another cell using another frequency in the same RNC that failed to complete succesfully. (HoWithCmMeasInterBand)

Data Source

RNC C-Node

Source Field

VS.IntraRncOutInterFreqHoFail.HoWithCmMeasInterBand

Source Section

FddCell

IntraRncOutInterFreqHoFailHoWithCmMeasNodeBFail

Number of Intra RNC Hard Handovers attempted from this cell to another cell using another frequency in the same RNC that failed to complete succesfully. (HoWithCmMeasNodeBFail)

Data Source

RNC C-Node

Source Field

VS.IntraRncOutInterFreqHoFail.HoWithCmMeasNodeBFail

Source Section

FddCell

IntraRncOutInterFreqHoFailHoWithCmMeasNoRsrc

Number of Intra RNC Hard Handovers attempted from this cell to another cell using another frequency in the same RNC that failed to complete succesfully. (HoWithCmMeasNoRsrc)

Data Source

RNC C-Node

Source Field

VS.IntraRncOutInterFreqHoFail.HoWithCmMeasNoRsrc

Source Section

FddCell

IntraRncOutInterFreqHoFailHoWithMeasFailRRC

Number of Intra RNC Hard Handovers attempted from this cell to another cell using another frequency in the same RNC that failed to complete succesfully. (HoWithMeasFailRRC)

Data Source

RNC C-Node

Source Field

VS.IntraRncOutInterFreqHoFail.HoWithMeasFailRRC

Source Section

FddCell

IntraRncOutInterFreqHoFailHoWithMeasNodeBFail

Number of Intra RNC Hard Handovers attempted from this cell to another cell using another frequency in the same RNC that failed to complete succesfully. (HoWithMeasNodeBFail)

Data Source

RNC C-Node

Source Field

VS.IntraRncOutInterFreqHoFail.HoWithMeasNodeBFail

Source Section

FddCell

IRATHO_AttIncCS

The number of attempted GSM to UMTS handovers per cell (incoming HO)

Data Source

RNC

Source Field

IRATHO.AttIncCS

Source Section

GSM to UMTS Handover

IRATHO_AttOutCS

The number of attempted UMTS to GSM handovers per cell from UEs point of view (outgoing HO)

Data Source

RNC

Source Field

IRATHO.AttOutCS

Source Section

UMTS to GSM Handover PMs

IRATHO_AttOutCS_RSCP

Attempted UMTS to GSM Handovers initiated due to Received Signal Code Power(RSCP)

Data Source

RNC

Source Field

IRATHO.AttOutCS.RSCP

Source Section

Active Set Size Distribution of Radio Links

IRATHO_AttOutPSUTRAN

Attempted outgoing packet switched inter-RAT handovers, UTRAN controlled

Data Source

RNC

Source Field

IRATHO.AttOutPSUTRAN

Source Section

Packet switched inter-RAT handover (Cell Change Order from UTRAN)

IRATHO_AttOutPSUTRAN_RSCP

Attempted outgoing packet switched inter-RAT handovers, UTRAN controlled initiated due to Received Signal Code Power(RSCP)

Data Source

RNC

Source Field

IRATHO.AttOutPSUTRAN.RSCP

Source Section

Packet switched inter-RAT handover (Cell Change Order from UTRAN)

IRATHO_AttRelocPrep_DirRetry

Attempted Relocation Preparations for Inter-system Directed Retry

Data Source

RNC

Source Field

VS.IRATHO.AttRelocPrep.DirRetry

Source Section

Inter-System Directed Retry

IRATHO_AttRelocPrepOutCS

Attempted relocation preparations for UMTS to GSM handover

Data Source

RNC

Source Field

IRATHO.AttRelocPrepOutCS

Source Section

UMTS to GSM Handover PMs

IRATHO_FailIncCS_HoNotEnabled

Failed GSM to UMTS handovers due to GSM to UMTS Handover Not Enabled

Data Source

RNC

Source Field

IRATHO.FailIncCS.HoNotEnabled

Source Section

GSM to UMTS Handover

IRATHO_FailIncCS_RelocCancel

Failed GSM to UMTS handovers due to Relocation Cancel

Data Source

RNC

Source Field

IRATHO.FailIncCS.RelocCancel

Source Section

GSM to UMTS Handover

IRATHO_FailIncCS_sum

Failed GSM to UMTS handovers due to all causes

Data Source

RNC

Source Field

IRATHO.FailIncCS.sum

Source Section

GSM to UMTS Handover

IRATHO_FailIncCS_T_hoToUtranComplete

Failed GSM to UMTS handovers due to timer T_hoToUtranComplete expiry

Data Source

RNC

Source Field

IRATHO.FailIncCS.T_hoToUtranComplete

Source Section

GSM to UMTS Handover

IRATHO_FailOutCS_ConfUnaccept

Failed UMTS to GSM handovers due to Configuration unacceptable

Data Source

RNC

Source Field

IRATHO.FailOutCS.ConfUnaccept

Source Section

UMTS to GSM Handover PMs

IRATHO_FailOutCS_PhyChnFail

Failed UMTS to GSM handovers due to Physical Channel Failure

Data Source

RNC

Source Field

IRATHO.FailOutCS.PhyChnFail

Source Section

UMTS to GSM Handover PMs

IRATHO_FailOutCS_ProtErr

Failed UMTS to GSM handovers due to Protocol Error

Data Source

RNC

Source Field

IRATHO.FailOutCS.ProtErr

Source Section

UMTS to GSM Handover PMs

IRATHO_FailOutCS_sum

Retired fr 3.0.6.0.0 - Failed UMTS to GSM handovers due to all causes

Data Source

RNC

Source Field

IRATHO.FailOutCS.sum

Source Section

UMTS to GSM Handover PMs

IRATHO_FailOutPSUTRAN_ConfUnaccept

Failed outgoing packet switched inter-RAT handovers UTRAN controlled-Cause: Configuration unacceptable

Data Source

RNC

Source Field

IRATHO.FailOutPSUTRAN.ConfUnaccept

Source Section

Packet switched inter-RAT handover (Cell Change Order from UTRAN)

IRATHO_FailOutPSUTRAN_PhyChnFail

Failed outgoing packet switched inter-RAT handovers UTRAN controlled-Cause: Physical Channel Failure

Data Source

RNC

Source Field

IRATHO.FailOutPSUTRAN.PhyChnFail

Source Section

Packet switched inter-RAT handover (Cell Change Order from UTRAN)

IRATHO_FailOutPSUTRAN_ProtErr

Failed outgoing packet switched inter-RAT handovers UTRAN controlled-Cause: Protocol Error

Data Source

RNC

Source Field

IRATHO.FailOutPSUTRAN.ProtErr

Source Section

Packet switched inter-RAT handover (Cell Change Order from UTRAN)

IRATHO_FailOutPSUTRAN_sum

Failed outgoing packet switched inter-RAT handovers UTRAN controlled - Cause: sum

Data Source

RNC

Source Field

IRATHO.FailOutPSUTRAN.sum

Source Section

Packet switched inter-RAT handover (Cell Change Order from UTRAN)

IRATHO_FailOutPSUTRAN_Unspec

Failed outgoing packet switched inter-RAT handovers UTRAN controlled. Cause: Unspecified

Data Source

RNC

Source Field

IRATHO.FailOutPSUTRAN.Unspec

Source Section

UtranCell

IRATHO_FailRelocPrep_DirRetry_FailTarSys

Failed Relocation Preparations for Inter-system Directed Retry due to Reloaction Failure in Target System

Data Source

RNC

Source Field

VS.IRATHO.FailRelocPrep.DirRetry.FailTarSys

Source Section

Inter-System Directed Retry

IRATHO_FailRelocPrep_DirRetry_NoRRTarSys

Failed relocation preparations for inter-system directed retry-Cause:No Radio Resources Available in Target Cell

Data Source

RNC

Source Field

VS.IRATHO.FailRelocPrep.DirRetry.NoRRTarSys

Source Section

Inter-System Directed Retry

IRATHO_FailRelocPrep_DirRetryIncompRxSt

Failed relocation preparations for inter-system directed retry-Cause: Message not compatible with receiver state

Data Source

RNC

Source Field

VS.IRATHO.FailRelocPrep.DirRetry.IncompRxState

Source Section

Inter-System Directed Retry

IRATHO_FailRelocPrep_DirRetryNotSupTar

Failed relocation preparations for inter-system directed retry-Cause:Relocation not supported in Target System

Data Source

RNC

Source Field

VS.IRATHO.FailRelocPrep.DirRetry.NotSupTarSys

Source Section

Inter-System Directed Retry

IRATHO_FailRelocPrep_DirRetryT_RELOCprep

Failed relocation preparations for inter-system directed retry-Cause: T_RELOCprep expiry

Data Source

RNC

Source Field

VS.IRATHO.FailRelocPrep.DirRetry.T_RELOCprep_exp

Source Section

Inter-System Directed Retry

IRATHO_FailRelocPrep_DirRetryTarNotAllow

Failed relocation preparations for inter-system directed retry-Cause:Relocation Target not allowed

Data Source

RNC

Source Field

VS.IRATHO.FailRelocPrep.DirRetry.TarNotAllowed

Source Section

Inter-System Directed Retry

IRATHO_FailRelocPrepOutCS_AbstSyntErr

Failed relocation preparations for UMTS to GSM handover per failure cause: Abstract Syntax Error (Reject) (100)

Data Source

RNC

Source Field

IRATHO.FailRelocPrepOutCS.AbstSyntErr

Source Section

UtranCell

IRATHO_FailRelocPrepOutCS_FailTarSys

Failed relocation preparations for UMTS to GSM handover due to Relocation Failure in Target System

Data Source

RNC

Source Field

IRATHO.FailRelocPrepOutCS.FailTarSys

Source Section

UMTS to GSM Handover PMs

IRATHO_FailRelocPrepOutCS_NoResAv

Failed relocation preparations for UMTS to GSM handover per failure cause: No Resource Available (114)

Data Source

RNC

Source Field

IRATHO.FailRelocPrepOutCS.NoResAv

Source Section

UtranCell

IRATHO_FailRelocPrepOutCS_NoRRTarCell

Failed relocation preparations for UMTS to GSM handover per failure cause: No Radio Resources Available in Target Cell (53)

Data Source

RNC

Source Field

IRATHO.FailRelocPrepOutCS.NoRRTarCell

Source Section

UtranCell

IRATHO_FailRelocPrepOutCS_NoRRTarSys

Renamed 4.3.7.0.10 - new name:IRATHO_FailRelocPrepOutCS_NoRRTarCell. Failed relocation preparations for UMTS to GSM handover due to No Radio Resources Available in Target Cell

Data Source

RNC

Source Field

IRATHO.FailRelocPrepOutCS.NoRRTarSys

Source Section

UMTS to GSM Handover PMs

IRATHO_FailRelocPrepOutCS_NotSupTarSys

Failed relocation preparations for UMTS to GSM handover due to Relocation not supported in Target System

Data Source

RNC

Source Field

IRATHO.FailRelocPrepOutCS.NotSupTarSys

Source Section

UMTS to GSM Handover PMs

IRATHO_FailRelocPrepOutCS_OmInt

Failed relocation preparations for UMTS to GSM handover per failure cause: O&M Intervention (113)

Data Source

RNC

Source Field

IRATHO.FailRelocPrepOutCS.OmInt

Source Section

UtranCell

IRATHO_FailRelocPrepOutCS_RelocCanc

The number of failed relocation preparations for UMTS to GSM handover due to normal call termination.

Data Source

RNC

Source Field

IRATHO.FailRelocPrepOutCS.RelocCanc

Source Section

UMTS to GSM Handover PMs

IRATHO_FailRelocPrepOutCS_ReqCiphNotSupp

Failed relocation preparations for UMTS to GSM handover per failure cause: Requested Ciphering and/or Integrity Protection Algorithms not Supported (12)

Data Source

RNC

Source Field

IRATHO.FailRelocPrepOutCS.ReqCiphNotSupp

Source Section

UtranCell

IRATHO_FailRelocPrepOutCS_sum

Failed relocation preparations for UMTS to GSM handover due to all causes

Data Source

RNC

Source Field

IRATHO.FailRelocPrepOutCS.sum

Source Section

UMTS to GSM Handover PMs

IRATHO_FailRelocPrepOutCS_T_RELOCprep_exp

Failed relocation preparations for UMTS to GSM handover due to Expiry of the timer T_RELOCprep

Data Source

RNC

Source Field

IRATHO.FailRelocPrepOutCS.T_RELOCprep_exp

Source Section

UMTS to GSM Handover PMs

IRATHO_FailRelocPrepOutCS_TarNotAllowed

Failed relocation preparations for UMTS to GSM handover due to Relocation Target Not Allowed

Data Source

RNC

Source Field

IRATHO.FailRelocPrepOutCS.TarNotAllowed

Source Section

UMTS to GSM Handover PMs

IRATHO_FailRelocPrepOutCS_UnspecFail

Failed relocation preparations for UMTS to GSM handover per failure cause: Unspecified Failure (115)

Data Source

RNC

Source Field

IRATHO.FailRelocPrepOutCS.UnspecFail

Source Section

UtranCell

IRATHO_SuccIncCS

Successful GSM to UMTS handovers (incoming HO)

Data Source

RNC

Source Field

IRATHO.SuccIncCS

Source Section

UtranCell

IRATHO_SuccOutCS

Number of successful outgoing circuit switched inter-RAT handovers

Data Source

RNC

Source Field

IRATHO.SuccOutCS

Source Section

Active Set Size Distribution of Radio Links

IRATHO_SuccOutCS_DirRetry

Successful Inter-system UMTS to GSM Directed Retry

Data Source

RNC

Source Field

VS.IRATHO.SuccOutCS.DirRetry

Source Section

UtranCell

IRATHO_SuccOutCS_RSCP

Number of successful outgoing circuit switched inter-RAT handovers initiated due to RSCP

Data Source

RNC

Source Field

IRATHO.SuccOutCS.RSCP

Source Section

Active Set Size Distribution of Radio Links

IRATHO_SuccOutPSUTRAN

Successful outgoing packet switched inter-RAT handovers, UTRAN controlled

Data Source

RNC

Source Field

IRATHO.SuccOutPSUTRAN

Source Section

Packet switched inter-RAT handover (Cell Change Order from UTRAN)

IRATHO_SuccOutPSUTRAN_RSCP

Successful outgoing packet switched inter-RAT handovers, UTRAN controlled initiated due to Received Signal Code Power(RSCP)

Data Source

RNC

Source Field

IRATHO.SuccOutPSUTRAN.RSCP

Source Section

Packet switched inter-RAT handover (Cell Change Order from UTRAN)

IRATHO_SuccRelocPrep_DirRetry

Successful Relocation Preparations for Inter-system Directed Retry

Data Source

RNC

Source Field

VS.IRATHO.SuccRelocPrep.DirRetry

Source Section

Inter-System Directed Retry

IRATHO_SuccRelocPrepOutCS

Successful relocation preparations for UMTS to GSM handover

Data Source

RNC

Source Field

IRATHO.SuccRelocPrepOutCS

Source Section

UtranCell

IRATHO_TimeoutOutPSUTRAN

Outgoing packet switched inter-RAT handovers UTRAN controlled timeouts

Data Source

RNC

Source Field

VS.IRATHO.TimeoutOutPSUTRAN

Source Section

Packet switched inter-RAT handover (Cell Change Order from UTRAN)

IRATHO_TRelocOverall

The number of times the timer TRelocOverall has expired in case of a UMTS to GSM handover. The call may not have been dropped.

Data Source

RNC

Source Field

IRATHO.TRelocOverall

Source Section

UMTS to GSM Handover PMs

IRATHOAttOutCS

This measurement provides the number of attempted outgoing CS inter-RAT hard handovers. It is a synthetic counter of VS.RrcHoFromUtranCmdTrigByEcNo.RescueCs+VS.RrcHoFromUtranCmdTrigByRscp.RescueCs+sum(VS.RrcHoFromUtranCmdTrigRnc)+VS.RrcHoFromUtranCmdTrigByUeTxPowerMax+VS.RRCCdmaHOFromUtranCmd.Handover

Data Source

RNC C-Node

Source Field

IRATHO.AttOutCS

Source Section

FddCell

IRATHOAttRelocPrepDirRetry

Attempted relocation preparations for inter-system UMTS to GSM directed retry. (DirRetry)

Data Source

RNC C-Node

Source Field

VS.IRATHO.AttRelocPrep.DirRetry

Source Section

FddCell

IRATHOAttRelocPrepOutCS

Attempted relocation preparations for CS UMTS to GSM handover (CS inter-RAT Handover Attempt) from network point of view based on the strongest cell of the active link. (AttRelocPrepOutCS)

Data Source

RNC C-Node

Source Field

IRATHO.AttRelocPrepOutCS

© Copyright IBM Corp. 1999, 2009. All rights reserved.

Source Section

FddCell

IRATHOAttRelocPrepOutCSNextBestCell

Attempted relocation preparations for CS UMTS to GSM handover to the next best GSM cell (CS inter-RAT Handover Attempt) from network point of view based on the reference cell (strongest cell of the active link). This PM counter is similar to PM counter IRATHO_AttRelocPrepOutCS. The difference is that IRATHO_AttRelocPrepOutCS counts all defined events, but this counter counts only events that appeared at additional IRAT HO attempts as defined in TN-34230. All events that are counted by this counter are counted by IRATHO_AttRelocPrepOutCS too. This PM counter can be used to create KPIs which count attempted, successful and failing overall procedures (first and additional IRAT HO preparations). (NextBestCell)

Data Source

RNC C-Node

Source Field

IRATHO.AttRelocPrepOutCS.NextBestCell

Source Section

FddCell

IRATHOAttRelocPrepOutCSWPS

Attempted CS IRAT relocation preparations of CAC failure initiated Directed Retries of Wireless Priority Service (WPS) calls. Only applicable in the context of Directed Retry for WPS calls. (WPS)

Data Source

RNC C-Node

Source Field

VS.IRATHO.AttRelocPrepOutCS.WPS

Source Section

FddCell

IRATHOCancelRelocPrepDirRetryCallRel

Inter-system directed retry relocation preparation procedures cancelled due to normal call termination based on Iu Release Command. (CallRel)

Data Source

RNC C-Node

Source Field

VS.IRATHO.CancelRelocPrep.DirRetry.CallRel

Source Section

FddCell

IRATHOCancelRelocPrepOutCSCallRel

Relocation preparation procedures for UMTS to GSM handover cancelled due to normal call termination based on Iu Release Command. (CallRel)

Data Source

RNC C-Node

Source Field

VS.IRATHO.CancelRelocPrepOutCS.CallRel

Source Section

FddCell

IRATHOECIHOAttHO

This PM counts the number of Emergency calls for that an Immediate Inter-System Handover is attempted. Only applicable for the context of "Emergency Call Immediate Inter-System Handover". (AttHO)

Data Source

RNC C-Node

Source Field

VS.IRATHO.ECIHO.AttHO

Source Section

FddCell

© Copyright IBM Corp. 1999, 2009. All rights reserved.

IRATHOECIHOAttRelocPrep

The number of attempted relocation preparations for Emergency Call Immediate Inter-System Handover (ECIHO). Only applicable for the context of "Emergency Call Immediate Inter-System Handover". (AttRelocPrep)

Data Source

RNC C-Node

Source Field

VS.IRATHO.ECIHO.AttRelocPrep

Source Section

FddCell

IRATHOECIHOAttRRCHO

The number of attempted handovers for Emergency Call Immediate Inter-System Handover (ECIHO). Only applicable for the context of "Emergency Call Immediate Inter-System Handover". (AttRRCHO)

Data Source

RNC C-Node

Source Field

VS.IRATHO.ECIHO.AttRRCHO

Source Section

FddCell

IRATHOECIHOCancelHO

The number of Emergency calls for that an Immediate Inter-System Handover is cancelled by normal call release after the RAB has been successfully established and before the handover is initiated by a relocation preparation procedure. Only applicable for the context of "Emergency Call Immediate Inter-System Handover". (CancelHO)

Data Source

RNC C-Node

Source Field

VS.IRATHO.ECIHO.CancelHO

Source Section

FddCell

IRATHOECIHOCancelRelocPrep

The number of Emergency calls that an Immediate Inter-System Handover is cancelled by normal call release during ongoing relocation preparation procedure. Only applicable for the context of "Emergency Call Immediate Inter-System Handover". (CancelRelocPrep)

Data Source

RNC C-Node

Source Field

VS.IRATHO.ECIHO.CancelRelocPrep

Source Section

FddCell

IRATHOECIHOSuccHO

The number of successful Emergency Call Immediate Inter-System Handovers (ECIHO). Only applicable for the context of "Emergency Call Immediate Inter-System Handover". (SuccHO)

Data Source

RNC C-Node

Source Field

VS.IRATHO.ECIHO.SuccHO

Source Section

FddCell

IRATHOFailIncCSRelocCancel

Cancelled incoming CS IRAT (GSM to UMTS) handover. (RelocCancel)

Data Source

RNC C-Node

Source Field

IRATHO.FailIncCS.RelocCancel

© Copyright IBM Corp. 1999, 2009. All rights reserved.

Source Section

FddCell

IRATHOFailOutCS

This measurement provides the number of failed outgoing CS inter-RAT hard handovers. It is a synthetic counter of
sum(VS.RrcHoFromUtranFailure)+VS.RRCCdmaHOFromUtranFail.FailHO

Data Source

RNC C-Node

Source Field

IRATHO.FailOutCS

Source Section

FddCell

IRATHOFailOutPSUTRANNoRsrcCacFailure

Number of Inter Rat Cell Change Order failure received by RNC with a reference cell for which the iRNC is serving. This is in the scope of 3G to 2G handover, PS only (NoRsrcCacFailure)

Data Source

RNC C-Node

Source Field

IRATHO.FailOutPSUTRAN.NoRsrcCacFailure

Source Section

FddCell

IRATHOFailOutPSUTRANRescuePs

Number of Inter Rat Cell Change Order failure received by RNC with a reference cell for which the iRNC is serving. This is in the scope of 3G to 2G handover, PS only (RescuePs)

Data Source

RNC C-Node

Source Field

IRATHO.FailOutPSUTRAN.RescuePs

Source Section

FddCell

IRATHOFailOutPSUTRANServicePs

Number of Inter Rat Cell Change Order failure received by RNC with a reference cell for which the iRNC is serving. This is in the scope of 3G to 2G handover, PS only (ServicePs)

Data Source

RNC C-Node

Source Field

IRATHO.FailOutPSUTRAN.ServicePs

Source Section

FddCell

IRATHOFailRelocPrepDirRetryRelocCanc

Failed inter-system directed retry relocation preparation procedures due to relocation cancel. (RelocCanc)

Data Source

RNC C-Node

Source Field

IRATHO.FailRelocPrep.DirRetry.RelocCanc

Source Section

FddCell

IRATHOFailRelocPrepOutCS_TrLdHighTarCell

Failed relocation preparations for UMTS to GSM handover per failure cause: Traffic Load in The Target Cell Higher Than in the Source Cell (57)

Data Source

RNC

Source Field

IRATHO.FailRelocPrepOutCS.TrLdHighTarCell

© Copyright IBM Corp. 1999, 2009. All rights reserved.

Source Section

UtranCell

IRATHOFailRelocPrepOutCSAbstSyntErr

Failed relocation preparations for UMTS to GSM handover on the reference cell from network point of view per failure cause (AbstSyntErr)

Data Source

RNC C-Node

Source Field

IRATHO.FailRelocPrepOutCS.AbstSyntErr

Source Section

FddCell

IRATHOFailRelocPrepOutCSFailTarSys

Failed relocation preparations for UMTS to GSM handover on the reference cell from network point of view per failure cause (FailTarSys)

Data Source

RNC C-Node

Source Field

IRATHO.FailRelocPrepOutCS.FailTarSys

Source Section

FddCell

IRATHOFailRelocPrepOutCSNoResAvr

Failed relocation preparations for UMTS to GSM handover on the reference cell from network point of view per failure cause (NoResAvr)

Data Source

RNC C-Node

Source Field

IRATHO.FailRelocPrepOutCS.NoResAvr

Source Section

FddCell

IRATHOFailRelocPrepOutCSNoRRTarCell

Failed relocation preparations for UMTS to GSM handover on the reference cell from network point of view per failure cause (NoRRTarCell)

Data Source

RNC C-Node

Source Field

IRATHO.FailRelocPrepOutCS.NoRRTarCell

Source Section

FddCell

IRATHOFailRelocPrepOutCSNotSupTarSys

Failed relocation preparations for UMTS to GSM handover on the reference cell from network point of view per failure cause (NotSupTarSys)

Data Source

RNC C-Node

Source Field

IRATHO.FailRelocPrepOutCS.NotSupTarSys

Source Section

FddCell

IRATHOFailRelocPrepOutCSOmInt

Failed relocation preparations for UMTS to GSM handover on the reference cell from network point of view per failure cause (OmInt)

Data Source

RNC C-Node

Source Field

IRATHO.FailRelocPrepOutCS.OmInt

© Copyright IBM Corp. 1999, 2009. All rights reserved.

Source Section

FddCell

IRATHOFailRelocPrepOutCSRelocCanc

Failed relocation preparations for UMTS to GSM handover on the reference cell from network point of view per failure cause (RelocCanc)

Data Source

RNC C-Node

Source Field

IRATHO.FailRelocPrepOutCS.RelocCanc

Source Section

FddCell

IRATHOFailRelocPrepOutCSReqCiphNotSuppr

Failed relocation preparations for UMTS to GSM handover on the reference cell from network point of view per failure cause (ReqCiphNotSuppr)

Data Source

RNC C-Node

Source Field

IRATHO.FailRelocPrepOutCS.ReqCiphNotSuppr

Source Section

FddCell

IRATHOFailRelocPrepOutCSSum

Failed relocation preparations for UMTS to GSM handover on the reference cell from network point of view. (Sum)

Data Source

RNC C-Node

Source Field

IRATHO.FailRelocPrepOutCS.Sum

Source Section

FddCell

IRATHOFailRelocPrepOutCSTarNotAllowed

Failed relocation preparations for UMTS to GSM handover on the reference cell from network point of view per failure cause (TarNotAllowed)

Data Source

RNC C-Node

Source Field

IRATHO.FailRelocPrepOutCS.TarNotAllowed

Source Section

FddCell

IRATHOFailRelocPrepOutCSTRELOCprep_exp

Failed relocation preparations for UMTS to GSM handover on the reference cell from network point of view per failure cause (TRELOCprep_exp)

Data Source

RNC C-Node

Source Field

IRATHO.FailRelocPrepOutCS.TRELOCprep_exp

Source Section

FddCell

IRATHOFailRelocPrepOutCSTrLdHighTarCell

Failed relocation preparations for UMTS to GSM handover on the reference cell from network point of view per failure cause (TrLdHighTarCell)

Data Source

RNC C-Node

Source Field

IRATHO.FailRelocPrepOutCS.TrLdHighTarCell

© Copyright IBM Corp. 1999, 2009. All rights reserved.

Source Section

FddCell

IRATHOFailRelocPrepOutCSUnspecFail

Failed relocation preparations for UMTS to GSM handover on the reference cell from network point of view per failure cause (UnspecFail)

Data Source

RNC C-Node

Source Field

IRATHO.FailRelocPrepOutCS.UnspecFail

Source Section

FddCell

IRATHOSuccIncCS

Successful CS GSM to UMTS handover (incoming HO). (SuccIncCS)

Data Source

RNC C-Node

Source Field

IRATHO.SuccIncCS

Source Section

FddCell

IRATHOSuccOutCSNoRsrcCs

Successful outgoing CS 3G to 2G handover (CS Inter-RAT handover). (NoRsrcCs)

Data Source

RNC C-Node

Source Field

IRATHO.SuccOutCS.NoRsrcCs

Source Section

FddCell

IRATHOSuccOutCSRescueCs

Successful outgoing CS 3G to 2G handover (CS Inter-RAT handover). (RescueCs)

Data Source

RNC C-Node

Source Field

IRATHO.SuccOutCS.RescueCs

Source Section

FddCell

IRATHOSuccOutCSServiceCs

Successful outgoing CS 3G to 2G handover (CS Inter-RAT handover). (ServiceCs)

Data Source

RNC C-Node

Source Field

IRATHO.SuccOutCS.ServiceCs

Source Section

FddCell

IRATHOSuccOutPSNoRsrcPs

Successful outgoing UTRAN controlled PS 3G to 2G handover (PS Inter-RAT handover). Packet Switched inter-RAT handover is implemented by the Cell Change Order from UTRAN procedure. (NoRsrcPs)

Data Source

RNC C-Node

Source Field

IRATHO.SuccOutPS.NoRsrcPs

© Copyright IBM Corp. 1999, 2009. All rights reserved.

Source Section

FddCell

IRATHOSuccOutPSRescuePs

Successful outgoing UTRAN controlled PS 3G to 2G handover (PS Inter-RAT handover). Packet Switched inter-RAT handover is implemented by the Cell Change Order from UTRAN procedure. (RescuePs)

Data Source

RNC C-Node

Source Field

IRATHO.SuccOutPS.RescuePs

Source Section

FddCell

IRATHOSuccOutPSServicePs

Successful outgoing UTRAN controlled PS 3G to 2G handover (PS Inter-RAT handover). Packet Switched inter-RAT handover is implemented by the Cell Change Order from UTRAN procedure. (ServicePs)

Data Source

RNC C-Node

Source Field

IRATHO.SuccOutPS.ServicePs

Source Section

FddCell

IRATHOSuccRelocDirRetry

Successful Inter-system UMTS to GSM Directed Retry. (DirRetry)

Data Source

RNC C-Node

Source Field

VS.IRATHO.SuccReloc.DirRetry

Source Section

FddCell

IRATHOSuccRelocPrepDirRetry

Successful relocation preparations for inter-system UMTS to GSM directed retry. (DirRetry)

Data Source

RNC C-Node

Source Field

VS.IRATHO.SuccRelocPrep.DirRetry

Source Section

FddCell

IRATHOSuccRelocPrepOutCSNextBestCell

Successful relocation preparations for CS UMTS to GSM handover to the next best GSM cell (CS inter-RAT Handover Attempt) from network point of view based on the reference cell (strongest cell of the active link). (NextBestCell)

Data Source

RNC C-Node

Source Field

IRATHO.SuccRelocPrepOutCS.NextBestCell

Source Section

FddCell

IRATHOTimeoutOutPSUTRAN

Outgoing packet switched inter-RAT handovers UTRAN controlled timeouts (TimeoutOutPSUTRAN)

Data Source

RNC C-Node

Source Field

VS.IRATHO.TimeoutOutPSUTRAN

© Copyright IBM Corp. 1999, 2009. All rights reserved.

Source Section

FddCell

IRATHOTrelocOverall

UMTS to GSM handovers TRelocOverall Expiry (TrelocOverall)

Data Source

RNC C-Node

Source Field

IRATHO.TrelocOverall

Source Section

FddCell

IRATHOWPSAttDirectedRetry

Attempted CAC failure initiated Directed Retries of Wireless Priority Service (WPS) calls. Number of attempted CAC failure initiated Directed Retries of Wireless Priority Service (WPS) calls. Only applicable in the context of Directed Retry for WPS calls. (AttDirectedRetry)

Data Source

RNC C-Node

Source Field

VS.IRATHO.WPS.AttDirectedRetry

Source Section

FddCell

IRATHOWPSAttHO

Attempted CS IRAT handovers of CAC failure initiated Directed Retries of Wireless Priority Service (WPS) calls. Only applicable in the context of Directed Retry for WPS calls. (AttHO)

Data Source

RNC C-Node

Source Field

VS.IRATHO.WPS.AttHO

Source Section

FddCell

IRATHOWPSCancelHO

Cancelled WPS CS IRAT Directed Retry attempts. The number of WPS calls for that the Directed Retry is cancelled by normal call release after the RAB Assignment was received and before the Directed Retry is initiated by a relocation preparation procedure. Only applicable for the context of WPS call Directed Retry. (CancelHO)

Data Source

RNC C-Node

Source Field

VS.IRATHO.WPS.CancelHO

Source Section

FddCell

IRATHOWPSCancelRelocPrep

Cancelled WPS CS IRAT Directed Retry Relocation Preparations. The number of WPS calls for that the Directed Retry is cancelled by normal call release during ongoing relocation preparation procedure. Only applicable for the context of WPS call Directed Retry. (CancelRelocPrep)

Data Source

RNC C-Node

Source Field

VS.IRATHO.WPS.CancelRelocPrep

Source Section

FddCell

IRATHOWPSSuccDirectedRetry

Successful CAC failure initiated CS IRAT Directed Retries of Wireless Priority Service (WPS) calls. Only applicable in the context of Directed Retry for WPS calls. (SuccDirectedRetry)

Data Source

RNC C-Node

© Copyright IBM Corp. 1999, 2009. All rights reserved.

Source Field

VS.IRATHO.WPS.SuccDirectedRetry

Source Section

FddCell

IrmcacDistributionEcNOPwrRngN11LeMeasLtN7

The number of dedicated measurements (DL CPICH_Ec/Io level) according to their respective ranges. (PwrRngN11LeMeasLtN7)

Data Source

RNC C-Node

Source Field

VS.IrmcacDistributionEcNO.PwrRngN11LeMeasLtN7

Source Section

FddCell

IrmcacDistributionEcNOPwrRngN13LeMeasLtN11

The number of dedicated measurements (DL CPICH_Ec/Io level) according to their respective ranges. (PwrRngN13LeMeasLtN11)

Data Source

RNC C-Node

Source Field

VS.IrmcacDistributionEcNO.PwrRngN13LeMeasLtN11

Source Section

FddCell

IrmcacDistributionEcNOPwrRngN15LeMeasLtN13

The number of dedicated measurements (DL CPICH_Ec/Io level) according to their respective ranges. (PwrRngN15LeMeasLtN13)

Data Source

RNC C-Node

Source Field

VS.IrmcacDistributionEcNO.PwrRngN15LeMeasLtN13

Source Section

FddCell

IrmcacDistributionEcNOPwrRngN24LeMeasLtN15

The number of dedicated measurements (DL CPICH_Ec/Io level) according to their respective ranges. (PwrRngN24LeMeasLtN15)

Data Source

RNC C-Node

Source Field

VS.IrmcacDistributionEcNO.PwrRngN24LeMeasLtN15

Source Section

FddCell

IrmcacDistributionEcNOPwrRngN7LeMeasLt0

The number of dedicated measurements (DL CPICH_Ec/Io level) according to their respective ranges. (PwrRngN7LeMeasLt0)

Data Source

RNC C-Node

Source Field

VS.IrmcacDistributionEcNO.PwrRngN7LeMeasLt0

Source Section

FddCell

IrmcacDistributionRscpN105LeMeasLtN95

Percentage per range of RSCP measurements received from UEs with that reference cell (N105LeMeasLtN95)

Data Source

RNC C-Node

© Copyright IBM Corp. 1999, 2009. All rights reserved.

Source Field

VS.IrmcacDistributionRscp.N105LeMeasLtN95

Source Section

FddCell

IrmcacDistributionRscpN110LeMeasLtN105

Percentage per range of RSCP measurements received from UEs with that reference cell (N110LeMeasLtN105)

Data Source

RNC C-Node

Source Field

VS.IrmcacDistributionRscp.N110LeMeasLtN105

Source Section

FddCell

IrmcacDistributionRscpN120LeMeasLtN110

Percentage per range of RSCP measurements received from UEs with that reference cell (N120LeMeasLtN110)

Data Source

RNC C-Node

Source Field

VS.IrmcacDistributionRscp.N120LeMeasLtN110

Source Section

FddCell

IrmcacDistributionRscpN80LeMeasLeN25

Percentage per range of RSCP measurements received from UEs with that reference cell (N80LeMeasLeN25)

Data Source

RNC C-Node

Source Field

VS.IrmcacDistributionRscp.N80LeMeasLeN25

Source Section

FddCell

IrmcacDistributionRscpN95LeMeasLtN80

Percentage per range of RSCP measurements received from UEs with that reference cell (N95LeMeasLtN80)

Data Source

RNC C-Node

Source Field

VS.IrmcacDistributionRscp.N95LeMeasLtN80

Source Section

FddCell

IrmcacPowerDistRng0to40pcTotPwr

Number of seconds per range of power considered by the CAC algorithm for that cell. The percentage is calculated as PowerReserved divided by MaxTxPower. (Rng0to40pcTotPwr)

Data Source

RNC C-Node

Source Field

VS.IrmcacPowerDist.Rng0to40pcTotPwr

Source Section

FddCell

IrmcacPowerDistRng40to70pcTotPwr

Number of seconds per range of power considered by the CAC algorithm for that cell. The percentage is calculated as PowerReserved divided by MaxTxPower. (Rng40to70pcTotPwr)

Data Source

RNC C-Node

© Copyright IBM Corp. 1999, 2009. All rights reserved.

Source Field

VS.IrmcacPowerDist.Rng40to70pcTotPwr

Source Section

FddCell

IrmcacPowerDistRng70to80pcTotPwr

Number of seconds per range of power considered by the CAC algorithm for that cell. The percentage is calculated as PowerReserved divided by MaxTxPower. (Rng70to80pcTotPwr)

Data Source

RNC C-Node

Source Field

VS.IrmcacPowerDist.Rng70to80pcTotPwr

Source Section

FddCell

IrmcacPowerDistRng80to90pcTotPwr

Number of seconds per range of power considered by the CAC algorithm for that cell. The percentage is calculated as PowerReserved divided by MaxTxPower. (Rng80to90pcTotPwr)

Data Source

RNC C-Node

Source Field

VS.IrmcacPowerDist.Rng80to90pcTotPwr

Source Section

FddCell

IrmcacPowerDistRng90to100pcTotPwr

Number of seconds per range of power considered by the CAC algorithm for that cell. The percentage is calculated as PowerReserved divided by MaxTxPower. (Rng90to100pcTotPwr)

Data Source

RNC C-Node

Source Field

VS.IrmcacPowerDist.Rng90to100pcTotPwr

Source Section

FddCell

IrmcacRadioLinkColorGreen

Number of time Color is Green for the Radio Link which is the reference cell for the UE (IrmcacRadioLinkColorGreen)

Data Source

RNC C-Node

Source Field

VS.IrmcacRadioLinkColorGreen

Source Section

FddCell

IrmcacRadioLinkColorRed

Number of time Color is Red for the Radio Link which is the reference cell for the UE (IrmcacRadioLinkColorRed)

Data Source

RNC C-Node

Source Field

VS.IrmcacRadioLinkColorRed

Source Section

FddCell

IrmPreemptionTimeCellColorCongestedAvg

Load counter that tracks the percentage of time during a collection period that a particular cell is considered congested by iRM because of either Code shortage or Power shortage (Avg)

Data Source

RNC C-Node

© Copyright IBM Corp. 1999, 2009. All rights reserved.

Source Field

VS.IrmPreemptionTimeCellColorCongested.Avg

Source Section

FddCell

IrmPreemptionTimeCellColorCongestedBecauseOfOvsfCodesAvg

Load counter that tracks the percentage of time during a collection period that a particular cell is considered congested by iRM because of Code shortage (Avg)

Data Source

RNC C-Node

Source Field

VS.IrmPreemptionTimeCellColorCongestedBecauseOfOvsfCodes.Avg

Source Section

FddCell

IrmPreemptionTimeCellColorCongestedBecauseOfOvsfCodesCum

Load counter that tracks the percentage of time during a collection period that a particular cell is considered congested by iRM because of Code shortage (Cum)

Data Source

RNC C-Node

Source Field

VS.IrmPreemptionTimeCellColorCongestedBecauseOfOvsfCodes.Cum

Source Section

FddCell

IrmPreemptionTimeCellColorCongestedBecauseOfOvsfCodesMax

Load counter that tracks the percentage of time during a collection period that a particular cell is considered congested by iRM because of Code shortage (Max)

Data Source

RNC C-Node

Source Field

VS.IrmPreemptionTimeCellColorCongestedBecauseOfOvsfCodes.Max

Source Section

FddCell

IrmPreemptionTimeCellColorCongestedBecauseOfOvsfCodesMin

Load counter that tracks the percentage of time during a collection period that a particular cell is considered congested by iRM because of Code shortage (Min)

Data Source

RNC C-Node

Source Field

VS.IrmPreemptionTimeCellColorCongestedBecauseOfOvsfCodes.Min

Source Section

FddCell

IrmPreemptionTimeCellColorCongestedBecauseOfOvsfCodesNbEvt

Load counter that tracks the percentage of time during a collection period that a particular cell is considered congested by iRM because of Code shortage (NbEvt)

Data Source

RNC C-Node

Source Field

VS.IrmPreemptionTimeCellColorCongestedBecauseOfOvsfCodes.NbEvt

Source Section

FddCell

IrmPreemptionTimeCellColorCongestedBecauseOfPowerAvg

Load counter that tracks the percentage of time during a collection period that a particular cell is considered congested by iRM because of Power shortage (Avg)

Data Source

RNC C-Node

© Copyright IBM Corp. 1999, 2009. All rights reserved.

Source Field

VS.IrmPreemptionTimeCellColorCongestedBecauseOfPower.Avg

Source Section

FddCell

IrmPreemptionTimeCellColorCongestedBecauseOfPowerCum

Load counter that tracks the percentage of time during a collection period that a particular cell is considered congested by iRM because of Power shortage (Cum)

Data Source

RNC C-Node

Source Field

VS.IrmPreemptionTimeCellColorCongestedBecauseOfPower.Cum

Source Section

FddCell

IrmPreemptionTimeCellColorCongestedBecauseOfPowerMax

Load counter that tracks the percentage of time during a collection period that a particular cell is considered congested by iRM because of Power shortage (Max)

Data Source

RNC C-Node

Source Field

VS.IrmPreemptionTimeCellColorCongestedBecauseOfPower.Max

Source Section

FddCell

IrmPreemptionTimeCellColorCongestedBecauseOfPowerMin

Load counter that tracks the percentage of time during a collection period that a particular cell is considered congested by iRM because of Power shortage (Min)

Data Source

RNC C-Node

Source Field

VS.IrmPreemptionTimeCellColorCongestedBecauseOfPower.Min

Source Section

FddCell

IrmPreemptionTimeCellColorCongestedBecauseOfPowerNbEvt

Load counter that tracks the percentage of time during a collection period that a particular cell is considered congested by iRM because of Power shortage (NbEvt)

Data Source

RNC C-Node

Source Field

VS.IrmPreemptionTimeCellColorCongestedBecauseOfPower.NbEvt

Source Section

FddCell

IrmPreemptionTimeCellColorCongestedCum

Load counter that tracks the percentage of time during a collection period that a particular cell is considered congested by iRM because of either Code shortage or Power shortage (Cum)

Data Source

RNC C-Node

Source Field

VS.IrmPreemptionTimeCellColorCongested.Cum

Source Section

FddCell

IrmPreemptionTimeCellColorCongestedMax

Load counter that tracks the percentage of time during a collection period that a particular cell is considered congested by iRM because of either Code shortage or Power shortage (Max)

Data Source

RNC C-Node

© Copyright IBM Corp. 1999, 2009. All rights reserved.

Source Field

VS.IrmPreemptionTimeCellColorCongested.Max

Source Section

FddCell

IrmPreemptionTimeCellColorCongestedMin

Load counter that tracks the percentage of time during a collection period that a particular cell is considered congested by iRM because of either Code shortage or Power shortage (Min)

Data Source

RNC C-Node

Source Field

VS.IrmPreemptionTimeCellColorCongested.Min

Source Section

FddCell

IrmPreemptionTimeCellColorCongestedNbEvt

Load counter that tracks the percentage of time during a collection period that a particular cell is considered congested by iRM because of either Code shortage or Power shortage (NbEvt)

Data Source

RNC C-Node

Source Field

VS.IrmPreemptionTimeCellColorCongested.NbEvt

Source Section

FddCell

IrmPreemptionTimeDlIubTransportCongestedAvg

Load counter that tracks the time during a collection period that a particular cell is considered Congested by iRM Preemption because of Downlink Iub transport shortage. (Avg)

Data Source

RNC C-Node

Source Field

VS.IrmPreemptionTimeDlIubTransportCongested.Avg

Source Section

FddCell

IrmPreemptionTimeDlIubTransportCongestedCum

Load counter that tracks the time during a collection period that a particular cell is considered Congested by iRM Preemption because of Downlink Iub transport shortage. (Cum)

Data Source

RNC C-Node

Source Field

VS.IrmPreemptionTimeDlIubTransportCongested.Cum

Source Section

FddCell

IrmPreemptionTimeDlIubTransportCongestedMax

Load counter that tracks the time during a collection period that a particular cell is considered Congested by iRM Preemption because of Downlink Iub transport shortage. (Max)

Data Source

RNC C-Node

Source Field

VS.IrmPreemptionTimeDlIubTransportCongested.Max

Source Section

FddCell

IrmPreemptionTimeDlIubTransportCongestedMin

Load counter that tracks the time during a collection period that a particular cell is considered Congested by iRM Preemption because of Downlink Iub transport shortage. (Min)

Data Source

RNC C-Node

© Copyright IBM Corp. 1999, 2009. All rights reserved.

Source Field

VS.IrmPreemptionTimeDlIubTransportCongested.Min

Source Section

FddCell

IrmPreemptionTimeDlIubTransportCongestedNbEvt

Load counter that tracks the time during a collection period that a particular cell is considered Congested by iRM Preemption because of Downlink Iub transport shortage. (NbEvt)

Data Source

RNC C-Node

Source Field

VS.IrmPreemptionTimeDlIubTransportCongested.NbEvt

Source Section

FddCell

IRMSchedulingDowngradedFailureDchPsIb128

Number of times a reconfiguration failure occurs after activation of feature called IRM scheduling downgrading based on TxCP. For a primary cell on SRNC and a radio quality degradation (detected by Transmitted Code Power) on a PS I/B or PS S call, this counter counts the number of reconfiguration failure (downgrading). (DchPsIb128)

Data Source

RNC C-Node

Source Field

VS.IRMSchedulingDowngradedFailure.DchPsIb128

Source Section

FddCell

IRMSchedulingDowngradedFailureDchPsIb16

Number of times a reconfiguration failure occurs after activation of feature called IRM scheduling downgrading based on TxCP. For a primary cell on SRNC and a radio quality degradation (detected by Transmitted Code Power) on a PS I/B or PS S call, this counter counts the number of reconfiguration failure (downgrading). (DchPsIb16)

Data Source

RNC C-Node

Source Field

VS.IRMSchedulingDowngradedFailure.DchPsIb16

Source Section

FddCell

IRMSchedulingDowngradedFailureDchPsIb256

Number of times a reconfiguration failure occurs after activation of feature called IRM scheduling downgrading based on TxCP. For a primary cell on SRNC and a radio quality degradation (detected by Transmitted Code Power) on a PS I/B or PS S call, this counter counts the number of reconfiguration failure (downgrading). (DchPsIb256)

Data Source

RNC C-Node

Source Field

VS.IRMSchedulingDowngradedFailure.DchPsIb256

Source Section

FddCell

IRMSchedulingDowngradedFailureDchPsIb32

Number of times a reconfiguration failure occurs after activation of feature called IRM scheduling downgrading based on TxCP. For a primary cell on SRNC and a radio quality degradation (detected by Transmitted Code Power) on a PS I/B or PS S call, this counter counts the number of reconfiguration failure (downgrading). (DchPsIb32)

Data Source

RNC C-Node

Source Field

VS.IRMSchedulingDowngradedFailure.DchPsIb32

Source Section

FddCell

© Copyright IBM Corp. 1999, 2009. All rights reserved.

IRMSchedulingDowngradedFailureDchPsIb384

Number of times a reconfiguration failure occurs after activation of feature called IRM scheduling downgrading based on TxCP. For a primary cell on SRNC and a radio quality degradation (detected by Transmitted Code Power) on a PS I/B or PS S call, this counter counts the number of reconfiguration failure (downgrading). (DchPsIb384)

Data Source

RNC C-Node

Source Field

VS.IRMSchedulingDowngradedFailure.DchPsIb384

Source Section

FddCell

IRMSchedulingDowngradedFailureDchPsIb64

Number of times a reconfiguration failure occurs after activation of feature called IRM scheduling downgrading based on TxCP. For a primary cell on SRNC and a radio quality degradation (detected by Transmitted Code Power) on a PS I/B or PS S call, this counter counts the number of reconfiguration failure (downgrading). (DchPsIb64)

Data Source

RNC C-Node

Source Field

VS.IRMSchedulingDowngradedFailure.DchPsIb64

Source Section

FddCell

IRMSchedulingDowngradedFailureDchPsStr128

Number of times a reconfiguration failure occurs after activation of feature called IRM scheduling downgrading based on TxCP. For a primary cell on SRNC and a radio quality degradation (detected by Transmitted Code Power) on a PS I/B or PS S call, this counter counts the number of reconfiguration failure (downgrading). (DchPsStr128)

Data Source

RNC C-Node

Source Field

VS.IRMSchedulingDowngradedFailure.DchPsStr128

Source Section

FddCell

IRMSchedulingDowngradedFailureDchPsStr16

Number of times a reconfiguration failure occurs after activation of feature called IRM scheduling downgrading based on TxCP. For a primary cell on SRNC and a radio quality degradation (detected by Transmitted Code Power) on a PS I/B or PS S call, this counter counts the number of reconfiguration failure (downgrading). (DchPsStr16)

Data Source

RNC C-Node

Source Field

VS.IRMSchedulingDowngradedFailure.DchPsStr16

Source Section

FddCell

IRMSchedulingDowngradedFailureDchPsStr256

Number of times a reconfiguration failure occurs after activation of feature called IRM scheduling downgrading based on TxCP. For a primary cell on SRNC and a radio quality degradation (detected by Transmitted Code Power) on a PS I/B or PS S call, this counter counts the number of reconfiguration failure (downgrading). (DchPsStr256)

Data Source

RNC C-Node

Source Field

VS.IRMSchedulingDowngradedFailure.DchPsStr256

Source Section

FddCell

IRMSchedulingDowngradedFailureDchPsStr384

Number of times a reconfiguration failure occurs after activation of feature called IRM scheduling downgrading based on TxCP. For a primary cell on SRNC and a radio quality

© Copyright IBM Corp. 1999, 2009. All rights reserved.

degradation (detected by Transmitted Code Power) on a PS I/B or PS S call, this counter counts the number of reconfiguration failure (downgrading). (DchPsStr384)

Data Source

RNC C-Node

Source Field

VS.IRMSchedulingDowngradedFailure.DchPsStr384

Source Section

FddCell

IRMSchedulingDowngradedFailureDchPsStr64

Number of times a reconfiguration failure occurs after activation of feature called IRM scheduling downgrading based on TxCP. For a primary cell on SRNC and a radio quality degradation (detected by Transmitted Code Power) on a PS I/B or PS S call, this counter counts the number of reconfiguration failure (downgrading). (DchPsStr64)

Data Source

RNC C-Node

Source Field

VS.IRMSchedulingDowngradedFailure.DchPsStr64

Source Section

FddCell

IRMSchedulingDowngradedFailureOther

Number of times a reconfiguration failure occurs after activation of feature called IRM scheduling downgrading based on TxCP. For a primary cell on SRNC and a radio quality degradation (detected by Transmitted Code Power) on a PS I/B or PS S call, this counter counts the number of reconfiguration failure (downgrading). (Other)

Data Source

RNC C-Node

Source Field

VS.IRMSchedulingDowngradedFailure.Other

Source Section

FddCell

IRMSchedulingDowngradedSuccessDchPsIb128

Number of times the RB is downgraded after activation of feature called IRM scheduling downgrading based on TxCP. For a primary cell on SRNC and a radio quality degradation (detected by Transmitted Code Power) on a PS I/B or PS S call, this counter counts the number of throughput downgradings (DchPsIb128)

Data Source

RNC C-Node

Source Field

VS.IRMSchedulingDowngradedSuccess.DchPsIb128

Source Section

FddCell

IRMSchedulingDowngradedSuccessDchPsIb16

Number of times the RB is downgraded after activation of feature called IRM scheduling downgrading based on TxCP. For a primary cell on SRNC and a radio quality degradation (detected by Transmitted Code Power) on a PS I/B or PS S call, this counter counts the number of throughput downgradings (DchPsIb16)

Data Source

RNC C-Node

Source Field

VS.IRMSchedulingDowngradedSuccess.DchPsIb16

Source Section

FddCell

IRMSchedulingDowngradedSuccessDchPsIb256

Number of times the RB is downgraded after activation of feature called IRM scheduling downgrading based on TxCP. For a primary cell on SRNC and a radio quality degradation (detected by Transmitted Code Power) on a PS I/B or PS S call, this counter counts the number of throughput downgradings (DchPsIb256)

© Copyright IBM Corp. 1999, 2009. All rights reserved.

Data Source

RNC C-Node

Source Field

VS.IRMSchedulingDowngradedSuccess.DchPsIb256

Source Section

FddCell

IRMSchedulingDowngradedSuccessDchPsIb32

Number of times the RB is downgraded after activation of feature called IRM scheduling downgrading based on TxCP. For a primary cell on SRNC and a radio quality degradation (detected by Transmitted Code Power) on a PS I/B or PS S call, this counter counts the number of throughput downgradings (DchPsIb32)

Data Source

RNC C-Node

Source Field

VS.IRMSchedulingDowngradedSuccess.DchPsIb32

Source Section

FddCell

IRMSchedulingDowngradedSuccessDchPsIb384

Number of times the RB is downgraded after activation of feature called IRM scheduling downgrading based on TxCP. For a primary cell on SRNC and a radio quality degradation (detected by Transmitted Code Power) on a PS I/B or PS S call, this counter counts the number of throughput downgradings (DchPsIb384)

Data Source

RNC C-Node

Source Field

VS.IRMSchedulingDowngradedSuccess.DchPsIb384

Source Section

FddCell

IRMSchedulingDowngradedSuccessDchPsIb64

Number of times the RB is downgraded after activation of feature called IRM scheduling downgrading based on TxCP. For a primary cell on SRNC and a radio quality degradation (detected by Transmitted Code Power) on a PS I/B or PS S call, this counter counts the number of throughput downgradings (DchPsIb64)

Data Source

RNC C-Node

Source Field

VS.IRMSchedulingDowngradedSuccess.DchPsIb64

Source Section

FddCell

IRMSchedulingDowngradedSuccessDchPsStr128

Number of times the RB is downgraded after activation of feature called IRM scheduling downgrading based on TxCP. For a primary cell on SRNC and a radio quality degradation (detected by Transmitted Code Power) on a PS I/B or PS S call, this counter counts the number of throughput downgradings (DchPsStr128)

Data Source

RNC C-Node

Source Field

VS.IRMSchedulingDowngradedSuccess.DchPsStr128

Source Section

FddCell

IRMSchedulingDowngradedSuccessDchPsStr16

Number of times the RB is downgraded after activation of feature called IRM scheduling downgrading based on TxCP. For a primary cell on SRNC and a radio quality degradation (detected by Transmitted Code Power) on a PS I/B or PS S call, this counter counts the number of throughput downgradings (DchPsStr16)

Data Source

RNC C-Node

© Copyright IBM Corp. 1999, 2009. All rights reserved.

Source Field

VS.IRMSchedulingDowngradedSuccess.DchPsStr16

Source Section

FddCell

IRMSchedulingDowngradedSuccessDchPsStr256

Number of times the RB is downgraded after activation of feature called IRM scheduling downgrading based on TxCP. For a primary cell on SRNC and a radio quality degradation (detected by Transmitted Code Power) on a PS I/B or PS S call, this counter counts the number of throughput downgradings (DchPsStr256)

Data Source

RNC C-Node

Source Field

VS.IRMSchedulingDowngradedSuccess.DchPsStr256

Source Section

FddCell

IRMSchedulingDowngradedSuccessDchPsStr384

Number of times the RB is downgraded after activation of feature called IRM scheduling downgrading based on TxCP. For a primary cell on SRNC and a radio quality degradation (detected by Transmitted Code Power) on a PS I/B or PS S call, this counter counts the number of throughput downgradings (DchPsStr384)

Data Source

RNC C-Node

Source Field

VS.IRMSchedulingDowngradedSuccess.DchPsStr384

Source Section

FddCell

IRMSchedulingDowngradedSuccessDchPsStr64

Number of times the RB is downgraded after activation of feature called IRM scheduling downgrading based on TxCP. For a primary cell on SRNC and a radio quality degradation

(detected by Transmitted Code Power) on a PS I/B or PS S call, this counter counts the number of throughput downgradings (DchPsStr64)

Data Source

RNC C-Node

Source Field

VS.IRMSchedulingDowngradedSuccess.DchPsStr64

Source Section

FddCell

IRMSchedulingDowngradedSuccessOther

Number of times the RB is downgraded after activation of feature called IRM scheduling downgrading based on TxCP. For a primary cell on SRNC and a radio quality degradation (detected by Transmitted Code Power) on a PS I/B or PS S call, this counter counts the number of throughput downgradings (Other)

Data Source

RNC C-Node

Source Field

VS.IRMSchedulingDowngradedSuccess.Other

Source Section

FddCell

IRMTimeCellRadioColorRedAvg

Load counter that tracks the percentage of time during a collection period that a particular cell is considered red by iRM (Avg)

Data Source

RNC C-Node

Source Field

VS.IRMTimeCellRadioColorRed.Avg

Source Section

FddCell

© Copyright IBM Corp. 1999, 2009. All rights reserved.

IRMTimeCellRadioColorRedCum

Load counter that tracks the percentage of time during a collection period that a particular cell is considered red by iRM (Cum)

Data Source

RNC C-Node

Source Field

VS.IRMTimeCellRadioColorRed.Cum

Source Section

FddCell

IRMTimeCellRadioColorRedMax

Load counter that tracks the percentage of time during a collection period that a particular cell is considered red by iRM (Max)

Data Source

RNC C-Node

Source Field

VS.IRMTimeCellRadioColorRed.Max

Source Section

FddCell

IRMTimeCellRadioColorRedMin

Load counter that tracks the percentage of time during a collection period that a particular cell is considered red by iRM (Min)

Data Source

RNC C-Node

Source Field

VS.IRMTimeCellRadioColorRed.Min

Source Section

FddCell

IRMTimeCellRadioColorRedNbEvt

Load counter that tracks the percentage of time during a collection period that a particular cell is considered red by iRM (NbEvt)

Data Source

RNC C-Node

Source Field

VS.IRMTimeCellRadioColorRed.NbEvt

Source Section

FddCell

IRMTimeCellRadioColorYellowAvg

Load counter that tracks the percentage of time during a collection period that a particular cell is considered yellow by iRM (Avg)

Data Source

RNC C-Node

Source Field

VS.IRMTimeCellRadioColorYellow.Avg

Source Section

FddCell

IRMTimeCellRadioColorYellowCum

Load counter that tracks the percentage of time during a collection period that a particular cell is considered yellow by iRM (Cum)

Data Source

RNC C-Node

Source Field

VS.IRMTimeCellRadioColorYellow.Cum

Source Section

FddCell

© Copyright IBM Corp. 1999, 2009. All rights reserved.

IRMTimeCellRadioColorYellowMax

Load counter that tracks the percentage of time during a collection period that a particular cell is considered yellow by iRM (Max)

Data Source

RNC C-Node

Source Field

VS.IRMTimeCellRadioColorYellow.Max

Source Section

FddCell

IRMTimeCellRadioColorYellowMin

Load counter that tracks the percentage of time during a collection period that a particular cell is considered yellow by iRM (Min)

Data Source

RNC C-Node

Source Field

VS.IRMTimeCellRadioColorYellow.Min

Source Section

FddCell

IRMTimeCellRadioColorYellowNbEvt

Load counter that tracks the percentage of time during a collection period that a particular cell is considered yellow by iRM (NbEvt)

Data Source

RNC C-Node

Source Field

VS.IRMTimeCellRadioColorYellow.NbEvt

Source Section

FddCell

IRMTimeDlCodesSF16RsrvHsAvg

Load counter that tracks the average number of DL codes (on SF 16 only) reserved for HSDPA users at RNC level. (Avg)

Data Source

RNC C-Node

Source Field

VS.IRMTimeDlCodesSF16RsrvHs.Avg

Source Section

FddCell

IRMTimeDlCodesSF16RsrvHsCum

Load counter that tracks the average number of DL codes (on SF 16 only) reserved for HSDPA users at RNC level. (Cum)

Data Source

RNC C-Node

Source Field

VS.IRMTimeDlCodesSF16RsrvHs.Cum

Source Section

FddCell

IRMTimeDlCodesSF16RsrvHsMax

Load counter that tracks the average number of DL codes (on SF 16 only) reserved for HSDPA users at RNC level. (Max)

Data Source

RNC C-Node

Source Field

VS.IRMTimeDlCodesSF16RsrvHs.Max

Source Section

FddCell

© Copyright IBM Corp. 1999, 2009. All rights reserved.

IRMTimeDlCodesSF16RsrvHsMin

Load counter that tracks the average number of DL codes (on SF 16 only) reserved for HSDPA users at RNC level. (Min)

Data Source

RNC C-Node

Source Field

VS.IRMTimeDlCodesSF16RsrvHs.Min

Source Section

FddCell

IRMTimeDlCodesSF16RsrvHsNbEvt

Load counter that tracks the average number of DL codes (on SF 16 only) reserved for HSDPA users at RNC level. (NbEvt)

Data Source

RNC C-Node

Source Field

VS.IRMTimeDlCodesSF16RsrvHs.NbEvt

Source Section

FddCell

IrmTimeDlIubTransportColorRedDlCsAvg

Load counter that tracks the percentage of time during a collection period that a particular cell is considered red by iRM because of Downlink Iub transport resource shortage (Avg)

Data Source

RNC C-Node

Source Field

VS.IrmTimeDlIubTransportColorRed.DlCs.Avg

Source Section

FddCell

IrmTimeDlIubTransportColorRedDlCsCum

Load counter that tracks the percentage of time during a collection period that a particular cell is considered red by iRM because of Downlink Iub transport resource shortage (Cum)

Data Source

RNC C-Node

Source Field

VS.IrmTimeDlIubTransportColorRed.DlCs.Cum

Source Section

FddCell

IrmTimeDlIubTransportColorRedDlCsMax

Load counter that tracks the percentage of time during a collection period that a particular cell is considered red by iRM because of Downlink Iub transport resource shortage (Max)

Data Source

RNC C-Node

Source Field

VS.IrmTimeDlIubTransportColorRed.DlCs.Max

Source Section

FddCell

IrmTimeDlIubTransportColorRedDlCsMin

Load counter that tracks the percentage of time during a collection period that a particular cell is considered red by iRM because of Downlink Iub transport resource shortage (Min)

Data Source

RNC C-Node

Source Field

VS.IrmTimeDlIubTransportColorRed.DlCs.Min

Source Section

FddCell

© Copyright IBM Corp. 1999, 2009. All rights reserved.

IrmTimeDlIubTransportColorRedDlCsNbEvt

Load counter that tracks the percentage of time during a collection period that a particular cell is considered red by iRM because of Downlink Iub transport resource shortage (NbEvt)

Data Source

RNC C-Node

Source Field

VS.IrmTimeDlIubTransportColorRed.DlCs.NbEvt

Source Section

FddCell

IrmTimeDlIubTransportColorRedDlPsIbDchAvg

Load counter that tracks the percentage of time during a collection period that a particular cell is considered red by iRM because of Downlink Iub transport resource shortage (Avg)

Data Source

RNC C-Node

Source Field

VS.IrmTimeDlIubTransportColorRed.DlPsIbDch.Avg

Source Section

FddCell

IrmTimeDlIubTransportColorRedDlPsIbDchCum

Load counter that tracks the percentage of time during a collection period that a particular cell is considered red by iRM because of Downlink Iub transport resource shortage (Cum)

Data Source

RNC C-Node

Source Field

VS.IrmTimeDlIubTransportColorRed.DlPsIbDch.Cum

Source Section

FddCell

IrmTimeDlIubTransportColorRedDlPsIbDchMax

Load counter that tracks the percentage of time during a collection period that a particular cell is considered red by iRM because of Downlink Iub transport resource shortage (Max)

Data Source

RNC C-Node

Source Field

VS.IrmTimeDlIubTransportColorRed.DlPsIbDch.Max

Source Section

FddCell

IrmTimeDlIubTransportColorRedDlPsIbDchMin

Load counter that tracks the percentage of time during a collection period that a particular cell is considered red by iRM because of Downlink Iub transport resource shortage (Min)

Data Source

RNC C-Node

Source Field

VS.IrmTimeDlIubTransportColorRed.DlPsIbDch.Min

Source Section

FddCell

IrmTimeDlIubTransportColorRedDlPsIbDchNbEvt

Load counter that tracks the percentage of time during a collection period that a particular cell is considered red by iRM because of Downlink Iub transport resource shortage (NbEvt)

Data Source

RNC C-Node

Source Field

VS.IrmTimeDlIubTransportColorRed.DlPsIbDch.NbEvt

Source Section

FddCell

© Copyright IBM Corp. 1999, 2009. All rights reserved.

IrmTimeDlIubTransportColorRedDlPsStrDchAvg

Load counter that tracks the percentage of time during a collection period that a particular cell is considered red by iRM because of Downlink Iub transport resource shortage (Avg)

Data Source

RNC C-Node

Source Field

VS.IrmTimeDlIubTransportColorRed.DlPsStrDch.Avg

Source Section

FddCell

IrmTimeDlIubTransportColorRedDlPsStrDchCum

Load counter that tracks the percentage of time during a collection period that a particular cell is considered red by iRM because of Downlink Iub transport resource shortage (Cum)

Data Source

RNC C-Node

Source Field

VS.IrmTimeDlIubTransportColorRed.DlPsStrDch.Cum

Source Section

FddCell

IrmTimeDlIubTransportColorRedDlPsStrDchMax

Load counter that tracks the percentage of time during a collection period that a particular cell is considered red by iRM because of Downlink Iub transport resource shortage (Max)

Data Source

RNC C-Node

Source Field

VS.IrmTimeDlIubTransportColorRed.DlPsStrDch.Max

Source Section

FddCell

IrmTimeDlIubTransportColorRedDlPsStrDchMin

Load counter that tracks the percentage of time during a collection period that a particular cell is considered red by iRM because of Downlink Iub transport resource shortage (Min)

Data Source

RNC C-Node

Source Field

VS.IrmTimeDlIubTransportColorRed.DlPsStrDch.Min

Source Section

FddCell

IrmTimeDlIubTransportColorRedDlPsStrDchNbEvt

Load counter that tracks the percentage of time during a collection period that a particular cell is considered red by iRM because of Downlink Iub transport resource shortage (NbEvt)

Data Source

RNC C-Node

Source Field

VS.IrmTimeDlIubTransportColorRed.DlPsStrDch.NbEvt

Source Section

FddCell

IrmTimeDlIubTransportColorYellowDlCsAvg

Load counter that tracks the percentage of time during a collection period that a particular cell is considered yellow by iRM because of Downlink Iub transport resource shortage (Avg)

Data Source

RNC C-Node

Source Field

VS.IrmTimeDlIubTransportColorYellow.DlCs.Avg

Source Section

FddCell

© Copyright IBM Corp. 1999, 2009. All rights reserved.

IrmTimeDlIubTransportColorYellowDlCsCum

Load counter that tracks the percentage of time during a collection period that a particular cell is considered yellow by iRM because of Downlink Iub transport resource shortage (Cum)

Data Source

RNC C-Node

Source Field

VS.IrmTimeDlIubTransportColorYellow.DlCs.Cum

Source Section

FddCell

IrmTimeDlIubTransportColorYellowDlCsMax

Load counter that tracks the percentage of time during a collection period that a particular cell is considered yellow by iRM because of Downlink Iub transport resource shortage (Max)

Data Source

RNC C-Node

Source Field

VS.IrmTimeDlIubTransportColorYellow.DlCs.Max

Source Section

FddCell

IrmTimeDlIubTransportColorYellowDlCsMin

Load counter that tracks the percentage of time during a collection period that a particular cell is considered yellow by iRM because of Downlink Iub transport resource shortage (Min)

Data Source

RNC C-Node

Source Field

VS.IrmTimeDlIubTransportColorYellow.DlCs.Min

Source Section

FddCell

IrmTimeDlIubTransportColorYellowDlCsNbEvt

Load counter that tracks the percentage of time during a collection period that a particular cell is considered yellow by iRM because of Downlink Iub transport resource shortage (NbEvt)

Data Source

RNC C-Node

Source Field

VS.IrmTimeDlIubTransportColorYellow.DlCs.NbEvt

Source Section

FddCell

IrmTimeDlIubTransportColorYellowDlPsIbDchAvg

Load counter that tracks the percentage of time during a collection period that a particular cell is considered yellow by iRM because of Downlink Iub transport resource shortage (Avg)

Data Source

RNC C-Node

Source Field

VS.IrmTimeDlIubTransportColorYellow.DlPsIbDch.Avg

Source Section

FddCell

IrmTimeDlIubTransportColorYellowDlPsIbDchCum

Load counter that tracks the percentage of time during a collection period that a particular cell is considered yellow by iRM because of Downlink Iub transport resource shortage (Cum)

Data Source

RNC C-Node

Source Field

VS.IrmTimeDlIubTransportColorYellow.DlPsIbDch.Cum

Source Section

FddCell

© Copyright IBM Corp. 1999, 2009. All rights reserved.

IrmTimeDlIubTransportColorYellowDlPsIbDchMax

Load counter that tracks the percentage of time during a collection period that a particular cell is considered yellow by iRM because of Downlink Iub transport resource shortage (Max)

Data Source

RNC C-Node

Source Field

VS.IrmTimeDlIubTransportColorYellow.DlPsIbDch.Max

Source Section

FddCell

IrmTimeDlIubTransportColorYellowDlPsIbDchMin

Load counter that tracks the percentage of time during a collection period that a particular cell is considered yellow by iRM because of Downlink Iub transport resource shortage (Min)

Data Source

RNC C-Node

Source Field

VS.IrmTimeDlIubTransportColorYellow.DlPsIbDch.Min

Source Section

FddCell

IrmTimeDlIubTransportColorYellowDlPsIbDchNbEvt

Load counter that tracks the percentage of time during a collection period that a particular cell is considered yellow by iRM because of Downlink Iub transport resource shortage (NbEvt)

Data Source

RNC C-Node

Source Field

VS.IrmTimeDlIubTransportColorYellow.DlPsIbDch.NbEvt

Source Section

FddCell

IrmTimeDlIubTransportColorYellowDlPsStrDchAvg

Load counter that tracks the percentage of time during a collection period that a particular cell is considered yellow by iRM because of Downlink Iub transport resource shortage (Avg)

Data Source

RNC C-Node

Source Field

VS.IrmTimeDlIubTransportColorYellow.DlPsStrDch.Avg

Source Section

FddCell

IrmTimeDlIubTransportColorYellowDlPsStrDchCum

Load counter that tracks the percentage of time during a collection period that a particular cell is considered yellow by iRM because of Downlink Iub transport resource shortage (Cum)

Data Source

RNC C-Node

Source Field

VS.IrmTimeDlIubTransportColorYellow.DlPsStrDch.Cum

Source Section

FddCell

IrmTimeDlIubTransportColorYellowDlPsStrDchMax

Load counter that tracks the percentage of time during a collection period that a particular cell is considered yellow by iRM because of Downlink Iub transport resource shortage (Max)

Data Source

RNC C-Node

Source Field

VS.IrmTimeDlIubTransportColorYellow.DlPsStrDch.Max

Source Section

FddCell

© Copyright IBM Corp. 1999, 2009. All rights reserved.

IrmTimeDlIubTransportColorYellowDlPsStrDchMin

Load counter that tracks the percentage of time during a collection period that a particular cell is considered yellow by iRM because of Downlink Iub transport resource shortage (Min)

Data Source

RNC C-Node

Source Field

VS.IrmTimeDlIubTransportColorYellow.DlPsStrDch.Min

Source Section

FddCell

IrmTimeDlIubTransportColorYellowDlPsStrDchNbEvt

Load counter that tracks the percentage of time during a collection period that a particular cell is considered yellow by iRM because of Downlink Iub transport resource shortage (NbEvt)

Data Source

RNC C-Node

Source Field

VS.IrmTimeDlIubTransportColorYellow.DlPsStrDch.NbEvt

Source Section

FddCell

IRMTimeFreeDlCodesBySpreadingFactor128Avg

Load counter that tracks the average number of free DL codes for each spreading factor (Avg)

Data Source

RNC C-Node

Source Field

VS.IRMTimeFreeDlCodesBySpreadingFactor.128.Avg

Source Section

FddCell

IRMTimeFreeDlCodesBySpreadingFactor128Cum

Load counter that tracks the average number of free DL codes for each spreading factor (Cum)

Data Source

RNC C-Node

Source Field

VS.IRMTimeFreeDlCodesBySpreadingFactor.128.Cum

Source Section

FddCell

IRMTimeFreeDlCodesBySpreadingFactor128Max

Load counter that tracks the average number of free DL codes for each spreading factor (Max)

Data Source

RNC C-Node

Source Field

VS.IRMTimeFreeDlCodesBySpreadingFactor.128.Max

Source Section

FddCell

IRMTimeFreeDlCodesBySpreadingFactor128Min

Load counter that tracks the average number of free DL codes for each spreading factor (Min)

Data Source

RNC C-Node

Source Field

VS.IRMTimeFreeDlCodesBySpreadingFactor.128.Min

Source Section

FddCell

IRMTimeFreeDlCodesBySpreadingFactor128NbEvt

Load counter that tracks the average number of free DL codes for each spreading factor (NbEvt)

© Copyright IBM Corp. 1999, 2009. All rights reserved.

Data Source

RNC C-Node

Source Field

VS.IRMTimeFreeDlCodesBySpreadingFactor.128.NbEvt

Source Section

FddCell

IRMTimeFreeDlCodesBySpreadingFactor16Avg

Load counter that tracks the average number of free DL codes for each spreading factor (Avg)

Data Source

RNC C-Node

Source Field

VS.IRMTimeFreeDlCodesBySpreadingFactor.16.Avg

Source Section

FddCell

IRMTimeFreeDlCodesBySpreadingFactor16Cum

Load counter that tracks the average number of free DL codes for each spreading factor (Cum)

Data Source

RNC C-Node

Source Field

VS.IRMTimeFreeDlCodesBySpreadingFactor.16.Cum

Source Section

FddCell

IRMTimeFreeDlCodesBySpreadingFactor16Max

Load counter that tracks the average number of free DL codes for each spreading factor (Max)

Data Source

RNC C-Node

Source Field

VS.IRMTimeFreeDlCodesBySpreadingFactor.16.Max

Source Section

FddCell

IRMTimeFreeDlCodesBySpreadingFactor16Min

Load counter that tracks the average number of free DL codes for each spreading factor (Min)

Data Source

RNC C-Node

Source Field

VS.IRMTimeFreeDlCodesBySpreadingFactor.16.Min

Source Section

FddCell

IRMTimeFreeDlCodesBySpreadingFactor16NbEvt

Load counter that tracks the average number of free DL codes for each spreading factor (NbEvt)

Data Source

RNC C-Node

Source Field

VS.IRMTimeFreeDlCodesBySpreadingFactor.16.NbEvt

Source Section

FddCell

IRMTimeFreeDlCodesBySpreadingFactor256Avg

Load counter that tracks the average number of free DL codes for each spreading factor (Avg)

Data Source

RNC C-Node

Source Field

VS.IRMTimeFreeDlCodesBySpreadingFactor.256.Avg

© Copyright IBM Corp. 1999, 2009. All rights reserved.

Source Section

FddCell

IRMTimeFreeDlCodesBySpreadingFactor256Cum

Load counter that tracks the average number of free DL codes for each spreading factor (Cum)

Data Source

RNC C-Node

Source Field

VS.IRMTimeFreeDlCodesBySpreadingFactor.256.Cum

Source Section

FddCell

IRMTimeFreeDlCodesBySpreadingFactor256Max

Load counter that tracks the average number of free DL codes for each spreading factor (Max)

Data Source

RNC C-Node

Source Field

VS.IRMTimeFreeDlCodesBySpreadingFactor.256.Max

Source Section

FddCell

IRMTimeFreeDlCodesBySpreadingFactor256Min

Load counter that tracks the average number of free DL codes for each spreading factor (Min)

Data Source

RNC C-Node

Source Field

VS.IRMTimeFreeDlCodesBySpreadingFactor.256.Min

Source Section

FddCell

IRMTimeFreeDlCodesBySpreadingFactor256NbEvt

Load counter that tracks the average number of free DL codes for each spreading factor (NbEvt)

Data Source

RNC C-Node

Source Field

VS.IRMTimeFreeDlCodesBySpreadingFactor.256.NbEvt

Source Section

FddCell

IRMTimeFreeDlCodesBySpreadingFactor32Avg

Load counter that tracks the average number of free DL codes for each spreading factor (Avg)

Data Source

RNC C-Node

Source Field

VS.IRMTimeFreeDlCodesBySpreadingFactor.32.Avg

Source Section

FddCell

IRMTimeFreeDlCodesBySpreadingFactor32Cum

Load counter that tracks the average number of free DL codes for each spreading factor (Cum)

Data Source

RNC C-Node

Source Field

VS.IRMTimeFreeDlCodesBySpreadingFactor.32.Cum

Source Section

FddCell

IRMTimeFreeDlCodesBySpreadingFactor32Max

Load counter that tracks the average number of free DL codes for each spreading factor (Max)

© Copyright IBM Corp. 1999, 2009. All rights reserved.

Data Source

RNC C-Node

Source Field

VS.IRMTimeFreeDlCodesBySpreadingFactor.32.Max

Source Section

FddCell

IRMTimeFreeDlCodesBySpreadingFactor32Min

Load counter that tracks the average number of free DL codes for each spreading factor (Min)

Data Source

RNC C-Node

Source Field

VS.IRMTimeFreeDlCodesBySpreadingFactor.32.Min

Source Section

FddCell

IRMTimeFreeDlCodesBySpreadingFactor32NbEvt

Load counter that tracks the average number of free DL codes for each spreading factor (NbEvt)

Data Source

RNC C-Node

Source Field

VS.IRMTimeFreeDlCodesBySpreadingFactor.32.NbEvt

Source Section

FddCell

IRMTimeFreeDlCodesBySpreadingFactor4Avg

Load counter that tracks the average number of free DL codes for each spreading factor (Avg)

Data Source

RNC C-Node

Source Field

VS.IRMTimeFreeDlCodesBySpreadingFactor.4.Avg

Source Section

FddCell

IRMTimeFreeDlCodesBySpreadingFactor4Cum

Load counter that tracks the average number of free DL codes for each spreading factor (Cum)

Data Source

RNC C-Node

Source Field

VS.IRMTimeFreeDlCodesBySpreadingFactor.4.Cum

Source Section

FddCell

IRMTimeFreeDlCodesBySpreadingFactor4Max

Load counter that tracks the average number of free DL codes for each spreading factor (Max)

Data Source

RNC C-Node

Source Field

VS.IRMTimeFreeDlCodesBySpreadingFactor.4.Max

Source Section

FddCell

IRMTimeFreeDlCodesBySpreadingFactor4Min

Load counter that tracks the average number of free DL codes for each spreading factor (Min)

Data Source

RNC C-Node

Source Field

VS.IRMTimeFreeDlCodesBySpreadingFactor.4.Min

© Copyright IBM Corp. 1999, 2009. All rights reserved.

Source Section

FddCell

IRMTimeFreeDlCodesBySpreadingFactor4NbEvt

Load counter that tracks the average number of free DL codes for each spreading factor (NbEvt)

Data Source

RNC C-Node

Source Field

VS.IRMTimeFreeDlCodesBySpreadingFactor.4.NbEvt

Source Section

FddCell

IRMTimeFreeDlCodesBySpreadingFactor64Avg

Load counter that tracks the average number of free DL codes for each spreading factor (Avg)

Data Source

RNC C-Node

Source Field

VS.IRMTimeFreeDlCodesBySpreadingFactor.64.Avg

Source Section

FddCell

IRMTimeFreeDlCodesBySpreadingFactor64Cum

Load counter that tracks the average number of free DL codes for each spreading factor (Cum)

Data Source

RNC C-Node

Source Field

VS.IRMTimeFreeDlCodesBySpreadingFactor.64.Cum

Source Section

FddCell

IRMTimeFreeDlCodesBySpreadingFactor64Max

Load counter that tracks the average number of free DL codes for each spreading factor (Max)

Data Source

RNC C-Node

Source Field

VS.IRMTimeFreeDlCodesBySpreadingFactor.64.Max

Source Section

FddCell

IRMTimeFreeDlCodesBySpreadingFactor64Min

Load counter that tracks the average number of free DL codes for each spreading factor (Min)

Data Source

RNC C-Node

Source Field

VS.IRMTimeFreeDlCodesBySpreadingFactor.64.Min

Source Section

FddCell

IRMTimeFreeDlCodesBySpreadingFactor64NbEvt

Load counter that tracks the average number of free DL codes for each spreading factor (NbEvt)

Data Source

RNC C-Node

Source Field

VS.IRMTimeFreeDlCodesBySpreadingFactor.64.NbEvt

Source Section

FddCell

IRMTimeFreeDlCodesBySpreadingFactor8Avg

Load counter that tracks the average number of free DL codes for each spreading factor (Avg)

© Copyright IBM Corp. 1999, 2009. All rights reserved.

Data Source

RNC C-Node

Source Field

VS.IRMTimeFreeDlCodesBySpreadingFactor.8.Avg

Source Section

FddCell

IRMTimeFreeDlCodesBySpreadingFactor8Cum

Load counter that tracks the average number of free DL codes for each spreading factor (Cum)

Data Source

RNC C-Node

Source Field

VS.IRMTimeFreeDlCodesBySpreadingFactor.8.Cum

Source Section

FddCell

IRMTimeFreeDlCodesBySpreadingFactor8Max

Load counter that tracks the average number of free DL codes for each spreading factor (Max)

Data Source

RNC C-Node

Source Field

VS.IRMTimeFreeDlCodesBySpreadingFactor.8.Max

Source Section

FddCell

IRMTimeFreeDlCodesBySpreadingFactor8Min

Load counter that tracks the average number of free DL codes for each spreading factor (Min)

Data Source

RNC C-Node

Source Field

VS.IRMTimeFreeDlCodesBySpreadingFactor.8.Min

Source Section

FddCell

IRMTimeFreeDlCodesBySpreadingFactor8NbEvt

Load counter that tracks the average number of free DL codes for each spreading factor (NbEvt)

Data Source

RNC C-Node

Source Field

VS.IRMTimeFreeDlCodesBySpreadingFactor.8.NbEvt

Source Section

FddCell

IRMTimeULRadioLoadColorRedAvg

Percentage of time during a collection period that the UL Radio Load color is red for the relating cell. (Avg)

Data Source

RNC C-Node

Source Field

VS.IRMTimeULRadioLoadColorRed.Avg

Source Section

FddCell

IRMTimeULRadioLoadColorRedCum

Percentage of time during a collection period that the UL Radio Load color is red for the relating cell. (Cum)

Data Source

RNC C-Node

© Copyright IBM Corp. 1999, 2009. All rights reserved.

Source Field

VS.IRMTimeULRadioLoadColorRed.Cum

Source Section

FddCell

IRMTimeULRadioLoadColorRedMax

Percentage of time during a collection period that the UL Radio Load color is red for the relating cell. (Max)

Data Source

RNC C-Node

Source Field

VS.IRMTimeULRadioLoadColorRed.Max

Source Section

FddCell

IRMTimeULRadioLoadColorRedMin

Percentage of time during a collection period that the UL Radio Load color is red for the relating cell. (Min)

Data Source

RNC C-Node

Source Field

VS.IRMTimeULRadioLoadColorRed.Min

Source Section

FddCell

IRMTimeULRadioLoadColorRedNbEvt

Percentage of time during a collection period that the UL Radio Load color is red for the relating cell. (NbEvt)

Data Source

RNC C-Node

Source Field

VS.IRMTimeULRadioLoadColorRed.NbEvt

Source Section

FddCell

IRMTimeULRadioLoadColorYellowAvg

Percentage of time during a collection period that the UL Radio Load color is yellow for the relating cell. (Avg)

Data Source

RNC C-Node

Source Field

VS.IRMTimeULRadioLoadColorYellow.Avg

Source Section

FddCell

IRMTimeULRadioLoadColorYellowCum

Percentage of time during a collection period that the UL Radio Load color is yellow for the relating cell. (Cum)

Data Source

RNC C-Node

Source Field

VS.IRMTimeULRadioLoadColorYellow.Cum

Source Section

FddCell

IRMTimeULRadioLoadColorYellowMax

Percentage of time during a collection period that the UL Radio Load color is yellow for the relating cell. (Max)

Data Source

RNC C-Node

© Copyright IBM Corp. 1999, 2009. All rights reserved.

Source Field

VS.IRMTimeULRadioLoadColorYellow.Max

Source Section

FddCell

IRMTimeULRadioLoadColorYellowMin

Percentage of time during a collection period that the UL Radio Load color is yellow for the relating cell. (Min)

Data Source

RNC C-Node

Source Field

VS.IRMTimeULRadioLoadColorYellow.Min

Source Section

FddCell

IRMTimeULRadioLoadColorYellowNbEvt

Percentage of time during a collection period that the UL Radio Load color is yellow for the relating cell. (NbEvt)

Data Source

RNC C-Node

Source Field

VS.IRMTimeULRadioLoadColorYellow.NbEvt

Source Section

FddCell

IrmUpgradingCommandHighBitRate

Number of upgrading commands for the primary cells on SRNC (HighBitRate)

Data Source

RNC C-Node

Source Field

VS.IrmUpgradingCommand.HighBitRate

Source Section

FddCell

IrmUpgradingCommandLowBitRate

Number of upgrading commands for the primary cells on SRNC (LowBitRate)

Data Source

RNC C-Node

Source Field

VS.IrmUpgradingCommand.LowBitRate

Source Section

FddCell

IrmUpgradingSuccessfulHighBitRate

Number of successful upgradings for the primary cells on SRNC (HighBitRate)

Data Source

RNC C-Node

Source Field

VS.IrmUpgradingSuccessful.HighBitRate

Source Section

FddCell

IrmUpgradingSuccessfulLowBitRate

Number of successful upgradings for the primary cells on SRNC (LowBitRate)

Data Source

RNC C-Node

Source Field

VS.IrmUpgradingSuccessful.LowBitRate

© Copyright IBM Corp. 1999, 2009. All rights reserved.

Source Section

FddCell

IuAbnormalReleaseRequestCsDlAsCnfCsData

Number of Iu abnormal release request that increments whenever RNC requests Iu release due to abnormal conditions (DlAsCnfCsData)

Data Source

RNC C-Node

Source Field

VS.IuAbnormalReleaseRequestCs.DlAsCnfCsData

Source Section

FddCell

IuAbnormalReleaseRequestCsDlAsCnfCsSigPs

Number of Iu abnormal release request that increments whenever RNC requests Iu release due to abnormal conditions (DlAsCnfCsSigPs)

Data Source

RNC C-Node

Source Field

VS.IuAbnormalReleaseRequestCs.DlAsCnfCsSigPs

Source Section

FddCell

IuAbnormalReleaseRequestCsDlAsCnfCsSpeechNbLrAmr

Number of Iu abnormal release request that increments whenever RNC requests Iu release due to abnormal conditions (DlAsCnfCsSpeechNbLrAmr)

Data Source

RNC C-Node

Source Field

VS.IuAbnormalReleaseRequestCs.DlAsCnfCsSpeechNbLrAmr

Source Section

FddCell

IuAbnormalReleaseRequestCsDlAsCnfCsSpeechWbAmr

Number of Iu abnormal release request that increments whenever RNC requests Iu release due to abnormal conditions (DlAsCnfCsSpeechWbAmr)

Data Source

RNC C-Node

Source Field

VS.IuAbnormalReleaseRequestCs.DlAsCnfCsSpeechWbAmr

Source Section

FddCell

IuAbnormalReleaseRequestCsDlAsCnfCsStr14_4

Number of Iu abnormal release request that increments whenever RNC requests Iu release due to abnormal conditions (DlAsCnfCsStr14_4)

Data Source

RNC C-Node

Source Field

VS.IuAbnormalReleaseRequestCs.DlAsCnfCsStr14_4

Source Section

FddCell

IuAbnormalReleaseRequestCsDlAsCnfCsStr57_6

Number of Iu abnormal release request that increments whenever RNC requests Iu release due to abnormal conditions (DlAsCnfCsStr57_6)

Data Source

RNC C-Node

Source Field

VS.IuAbnormalReleaseRequestCs.DlAsCnfCsStr57_6

© Copyright IBM Corp. 1999, 2009. All rights reserved.

Source Section

FddCell

IuAbnormalReleaseRequestCsDlAsCnfOther

Number of Iu abnormal release request that increments whenever RNC requests Iu release due to abnormal conditions (DlAsCnfOther)

Data Source

RNC C-Node

Source Field

VS.IuAbnormalReleaseRequestCs.DlAsCnfOther

Source Section

FddCell

IuAbnormalReleaseRequestCsDlAsCnfSig

Number of Iu abnormal release request that increments whenever RNC requests Iu release due to abnormal conditions (DlAsCnfSig)

Data Source

RNC C-Node

Source Field

VS.IuAbnormalReleaseRequestCs.DlAsCnfSig

Source Section

FddCell

IuAbnormalReleaseRequestPsDlAsCnfHsdpa

Number of DlAsConfIds that increments for multi-service whenever RNC requests Iu release due to abnormal conditions (DlAsCnfHsdpa)

Data Source

RNC C-Node

Source Field

VS.IuAbnormalReleaseRequestPs.DlAsCnfHsdpa

Source Section

FddCell

IuAbnormalReleaseRequestPsDlAsCnfOther

Number of DlAsConfIds that increments for multi-service whenever RNC requests Iu release due to abnormal conditions (DlAsCnfOther)

Data Source

RNC C-Node

Source Field

VS.IuAbnormalReleaseRequestPs.DlAsCnfOther

Source Section

FddCell

IuAbnormalReleaseRequestPsDlAsCnfPsIB128

Number of DlAsConfIds that increments for multi-service whenever RNC requests Iu release due to abnormal conditions (DlAsCnfPsIB128)

Data Source

RNC C-Node

Source Field

VS.IuAbnormalReleaseRequestPs.DlAsCnfPsIB128

Source Section

FddCell

IuAbnormalReleaseRequestPsDlAsCnfPsIB256

Number of DlAsConfIds that increments for multi-service whenever RNC requests Iu release due to abnormal conditions (DlAsCnfPsIB256)

Data Source

RNC C-Node

Source Field

VS.IuAbnormalReleaseRequestPs.DlAsCnfPsIB256

© Copyright IBM Corp. 1999, 2009. All rights reserved.

Source Section

FddCell

IuAbnormalReleaseRequestPsDlAsCnfPsIB384

Number of DlAsConfIds that increments for multi-service whenever RNC requests Iu release due to abnormal conditions (DlAsCnfPsIB384)

Data Source

RNC C-Node

Source Field

VS.IuAbnormalReleaseRequestPs.DlAsCnfPsIB384

Source Section

FddCell

IuAbnormalReleaseRequestPsDlAsCnfPsIB64

Number of DlAsConfIds that increments for multi-service whenever RNC requests Iu release due to abnormal conditions (DlAsCnfPsIB64)

Data Source

RNC C-Node

Source Field

VS.IuAbnormalReleaseRequestPs.DlAsCnfPsIB64

Source Section

FddCell

IuAbnormalReleaseRequestPsDlAsCnfPsIBLt64

Number of DlAsConfIds that increments for multi-service whenever RNC requests Iu release due to abnormal conditions (DlAsCnfPsIBLt64)

Data Source

RNC C-Node

Source Field

VS.IuAbnormalReleaseRequestPs.DlAsCnfPsIBLt64

Source Section

FddCell

IuAbnormalReleaseRequestPsDlAsCnfPsSigCs

Number of DlAsConfIds that increments for multi-service whenever RNC requests Iu release due to abnormal conditions (DlAsCnfPsSigCs)

Data Source

RNC C-Node

Source Field

VS.IuAbnormalReleaseRequestPs.DlAsCnfPsSigCs

Source Section

FddCell

IuAbnormalReleaseRequestPsDlAsCnfPsStr128

Number of DlAsConfIds that increments for multi-service whenever RNC requests Iu release due to abnormal conditions (DlAsCnfPsStr128)

Data Source

RNC C-Node

Source Field

VS.IuAbnormalReleaseRequestPs.DlAsCnfPsStr128

Source Section

FddCell

IuAbnormalReleaseRequestPsDlAsCnfPsStr256

Number of DlAsConfIds that increments for multi-service whenever RNC requests Iu release due to abnormal conditions (DlAsCnfPsStr256)

Data Source

RNC C-Node

Source Field

VS.IuAbnormalReleaseRequestPs.DlAsCnfPsStr256

© Copyright IBM Corp. 1999, 2009. All rights reserved.

Source Section

FddCell

IuAbnormalReleaseRequestPsDlAsCnfPsStr384

Number of DlAsConfIds that increments for multi-service whenever RNC requests Iu release due to abnormal conditions (DlAsCnfPsStr384)

Data Source

RNC C-Node

Source Field

VS.IuAbnormalReleaseRequestPs.DlAsCnfPsStr384

Source Section

FddCell

IuAbnormalReleaseRequestPsDlAsCnfPsStr64

Number of DlAsConfIds that increments for multi-service whenever RNC requests Iu release due to abnormal conditions (DlAsCnfPsStr64)

Data Source

RNC C-Node

Source Field

VS.IuAbnormalReleaseRequestPs.DlAsCnfPsStr64

Source Section

FddCell

IuAbnormalReleaseRequestPsDlAsCnfPsStrLt64

Number of DlAsConfIds that increments for multi-service whenever RNC requests Iu release due to abnormal conditions (DlAsCnfPsStrLt64)

Data Source

RNC C-Node

Source Field

VS.IuAbnormalReleaseRequestPs.DlAsCnfPsStrLt64

Source Section

FddCell

IuAbnormalReleaseRequestPsDlAsCnfSig

Number of DlAsConfIds that increments for multi-service whenever RNC requests Iu release due to abnormal conditions (DlAsCnfSig)

Data Source

RNC C-Node

Source Field

VS.IuAbnormalReleaseRequestPs.DlAsCnfSig

Source Section

FddCell

IuAbnormalReleaseRequestPsDlAsCnfTrbCellFach

Number of DlAsConfIds that increments for multi-service whenever RNC requests Iu release due to abnormal conditions (DlAsCnfTrbCellFach)

Data Source

RNC C-Node

Source Field

VS.IuAbnormalReleaseRequestPs.DlAsCnfTrbCellFach

Source Section

FddCell

IuAbnormalReleaseRequestPsDlAsCnfxPch

Number of DlAsConfIds that increments for multi-service whenever RNC requests Iu release due to abnormal conditions (DlAsCnfxPch)

Data Source

RNC C-Node

Source Field

VS.IuAbnormalReleaseRequestPs.DlAsCnfxPch

© Copyright IBM Corp. 1999, 2009. All rights reserved.

Source Section

FddCell

IuAbnRelReqPsPerULRbEDCH

Number of Iu abnormal release request that increments whenever RNC requests Iu release due to abnormal conditions. Reference cell on the serving RNC (EDCH)

Data Source

RNC C-Node

Source Field

VS.IuAbnRelReqPsPerULRb.EDCH

Source Section

FddCell

IuAbnRelReqPsPerULRbOther

Number of Iu abnormal release request that increments whenever RNC requests Iu release due to abnormal conditions. Reference cell on the serving RNC (Other)

Data Source

RNC C-Node

Source Field

VS.IuAbnRelReqPsPerULRb.Other

Source Section

FddCell

IuAbnRelReqPsPerULRbR99

Number of Iu abnormal release request that increments whenever RNC requests Iu release due to abnormal conditions. Reference cell on the serving RNC (R99)

Data Source

RNC C-Node

Source Field

VS.IuAbnRelReqPsPerULRb.R99

Source Section

FddCell

IuDlAmrFrmFqcFrmBad

Number of AMR frames received on Iu by FQC (FrmBad)

Data Source

RNC C-Node

Source Field

VS.IuDlAmrFrmFqc.FrmBad

Source Section

FddCell

IuDlAmrFrmFqcFrmBadRadio

Number of AMR frames received on Iu by FQC (FrmBadRadio)

Data Source

RNC C-Node

Source Field

VS.IuDlAmrFrmFqc.FrmBadRadio

Source Section

FddCell

IuDlAmrFrmFqcFrmGood

Number of AMR frames received on Iu by FQC (FrmGood)

Data Source

RNC C-Node

Source Field

VS.IuDlAmrFrmFqc.FrmGood

Source Section

FddCell

© Copyright IBM Corp. 1999, 2009. All rights reserved.

IuDlAmrWbFrmFqcFrmBad

Number of AMR WB frames received on Iu by FQC (FrmBad)

Data Source

RNC C-Node

Source Field

VS.IuDlAmrWbFrmFqc.FrmBad

Source Section

FddCell

IuDlAmrWbFrmFqcFrmBadRadio

Number of AMR WB frames received on Iu by FQC (FrmBadRadio)

Data Source

RNC C-Node

Source Field

VS.IuDlAmrWbFrmFqc.FrmBadRadio

Source Section

FddCell

IuDlAmrWbFrmFqcFrmGood

Number of AMR WB frames received on Iu by FQC (FrmGood)

Data Source

RNC C-Node

Source Field

VS.IuDlAmrWbFrmFqc.FrmGood

Source Section

FddCell

IuRcvdAmrRtCtrl

Number of received Iu rate control in AMR calls (IuRcvdAmrRtCtrl)

Data Source

RNC C-Node

Source Field

VS.IuRcvdAmrRtCtrl

Source Section

FddCell

IuRcvdAmrWbRtCtrl

Number of received Iu rate control in AMR WB calls (IuRcvdAmrWbRtCtrl)

Data Source

RNC C-Node

Source Field

VS.IuRcvdAmrWbRtCtrl

Source Section

FddCell

IurDrncRadioLinkAdditionSuccessCsData

Number of successful radio link addition for drift part of iRNC (CsData)

Data Source

RNC C-Node

Source Field

VS.IurDrncRadioLinkAdditionSuccess.CsData

Source Section

FddCell

IurDrncRadioLinkAdditionSuccessCsDataPsDch

Number of successful radio link addition for drift part of iRNC (CsDataPsDch)

Data Source

RNC C-Node

© Copyright IBM Corp. 1999, 2009. All rights reserved.

Source Field

VS.IurDrncRadioLinkAdditionSuccess.CsDataPsDch

Source Section

FddCell

IurDrncRadioLinkAdditionSuccessCsDataPsHsdpa

Number of successful radio link addition for drift part of iRNC (CsDataPsHsdpa)

Data Source

RNC C-Node

Source Field

VS.IurDrncRadioLinkAdditionSuccess.CsDataPsHsdpa

Source Section

FddCell

IurDrncRadioLinkAdditionSuccessCsSpeech

Number of successful radio link addition for drift part of iRNC (CsSpeech)

Data Source

RNC C-Node

Source Field

VS.IurDrncRadioLinkAdditionSuccess.CsSpeech

Source Section

FddCell

IurDrncRadioLinkAdditionSuccessCsSpeechHsdpa

Number of successful radio link addition for drift part of iRNC (CsSpeechHsdpa)

Data Source

RNC C-Node

Source Field

VS.IurDrncRadioLinkAdditionSuccess.CsSpeechHsdpa

Source Section

FddCell

IurDrncRadioLinkAdditionSuccessCsSpeechPsDch

Number of successful radio link addition for drift part of iRNC (CsSpeechPsDch)

Data Source

RNC C-Node

Source Field

VS.IurDrncRadioLinkAdditionSuccess.CsSpeechPsDch

Source Section

FddCell

IurDrncRadioLinkAdditionSuccessCsSpeechPsDchPsDch

Number of successful radio link addition for drift part of iRNC (CsSpeechPsDchPsDch)

Data Source

RNC C-Node

Source Field

VS.IurDrncRadioLinkAdditionSuccess.CsSpeechPsDchPsDch

Source Section

FddCell

IurDrncRadioLinkAdditionSuccessCsSpeechPsDchPsHsdpa

Number of successful radio link addition for drift part of iRNC (CsSpeechPsDchPsHsdpa)

Data Source

RNC C-Node

Source Field

VS.IurDrncRadioLinkAdditionSuccess.CsSpeechPsDchPsHsdpa

Source Section

FddCell

© Copyright IBM Corp. 1999, 2009. All rights reserved.

IurDrncRadioLinkAdditionSuccessCsStr

Number of successful radio link addition for drift part of iRNC (CsStr)

Data Source

RNC C-Node

Source Field

VS.IurDrncRadioLinkAdditionSuccess.CsStr

Source Section

FddCell

IurDrncRadioLinkAdditionSuccessOther

Number of successful radio link addition for drift part of iRNC (Other)

Data Source

RNC C-Node

Source Field

VS.IurDrncRadioLinkAdditionSuccess.Other

Source Section

FddCell

IurDrncRadioLinkAdditionSuccessPsDchDlDchUl

Number of successful radio link addition for drift part of iRNC (PsDchDlDchUl)

Data Source

RNC C-Node

Source Field

VS.IurDrncRadioLinkAdditionSuccess.PsDchDlDchUl

Source Section

FddCell

IurDrncRadioLinkAdditionSuccessPsDchPsDch

Number of successful radio link addition for drift part of iRNC (PsDchPsDch)

Data Source

RNC C-Node

Source Field

VS.IurDrncRadioLinkAdditionSuccess.PsDchPsDch

Source Section

FddCell

IurDrncRadioLinkAdditionSuccessPsDchPsHsdpa

Number of successful radio link addition for drift part of iRNC (PsDchPsHsdpa)

Data Source

RNC C-Node

Source Field

VS.IurDrncRadioLinkAdditionSuccess.PsDchPsHsdpa

Source Section

FddCell

IurDrncRadioLinkAdditionSuccessPsHsdpaDchUl

Number of successful radio link addition for drift part of iRNC (PsHsdpaDchUl)

Data Source

RNC C-Node

Source Field

VS.IurDrncRadioLinkAdditionSuccess.PsHsdpaDchUl

Source Section

FddCell

IurDrncRadioLinkAdditionSuccessPsHsdpaDlDchEdchUl

Number of successful radio link addition for drift part of iRNC (PsHsdpaDlDchEdchUl)

Data Source

RNC C-Node

© Copyright IBM Corp. 1999, 2009. All rights reserved.

Source Field

VS.IurDrncRadioLinkAdditionSuccess.PsHsdpaDlDchEdchUl

Source Section

FddCell

IurDrncRadioLinkAdditionSuccessPsHsdpaDlEdchUl

Number of successful radio link addition for drift part of iRNC (PsHsdpaDlEdchUl)

Data Source

RNC C-Node

Source Field

VS.IurDrncRadioLinkAdditionSuccess.PsHsdpaDlEdchUl

Source Section

FddCell

IurDrncRadioLinkAdditionSuccessSig

Number of successful radio link addition for drift part of iRNC (Sig)

Data Source

RNC C-Node

Source Field

VS.IurDrncRadioLinkAdditionSuccess.Sig

Source Section

FddCell

IurDrncRadioLinkAdditionUnsuccessNbapRefusal

Number of unsuccessful radio link setup for drift part of iRNC (NbapRefusal)

Data Source

RNC C-Node

Source Field

VS.IurDrncRadioLinkAdditionUnsuccess.NbapRefusal

Source Section

FddCell

IurDrncRadioLinkAdditionUnsuccessNoRadioResource

Number of unsuccessful radio link setup for drift part of iRNC (NoRadioResource)

Data Source

RNC C-Node

Source Field

VS.IurDrncRadioLinkAdditionUnsuccess.NoRadioResource

Source Section

FddCell

IurDrncRadioLinkAdditionUnsuccessRequestedConfigurationNotSupport

Number of unsuccessful radio link setup for drift part of iRNC (RequestedConfigurationNotSupport)

Data Source

RNC C-Node

Source Field

VS.IurDrncRadioLinkAdditionUnsuccess.RequestedConfigurationNotSupport

Source Section

FddCell

IurDrncRadioLinkAdditionUnsuccessUnspecified

Number of unsuccessful radio link setup for drift part of iRNC (Unspecified)

Data Source

RNC C-Node

Source Field

VS.IurDrncRadioLinkAdditionUnsuccess.Unspecified

© Copyright IBM Corp. 1999, 2009. All rights reserved.

Source Section

FddCell

IurDrncRadioLinkDeletionSuccess

Number of successful radio link deletion for drift part of iRNC (IurDrncRadioLinkDeletionSuccess)

Data Source

RNC C-Node

Source Field

VS.IurDrncRadioLinkDeletionSuccess

Source Section

FddCell

IurDrncRadioLinkReconfigurationCancel

Number of radio link reconfiguration cancel sent for drift part of iRNC (counted per radio link and not per message) (IurDrncRadioLinkReconfigurationCancel)

Data Source

RNC C-Node

Source Field

VS.IurDrncRadioLinkReconfigurationCancel

Source Section

FddCell

IurDrncRadioLinkReconfigurationCommitCsData

Number of radio link reconfiguration commit (CsData)

Data Source

RNC C-Node

Source Field

VS.IurDrncRadioLinkReconfigurationCommit.CsData

Source Section

FddCell

IurDrncRadioLinkReconfigurationCommitCsDataPsDch

Number of radio link reconfiguration commit (CsDataPsDch)

Data Source

RNC C-Node

Source Field

VS.IurDrncRadioLinkReconfigurationCommit.CsDataPsDch

Source Section

FddCell

IurDrncRadioLinkReconfigurationCommitCsDataPsHsdpa

Number of radio link reconfiguration commit (CsDataPsHsdpa)

Data Source

RNC C-Node

Source Field

VS.IurDrncRadioLinkReconfigurationCommit.CsDataPsHsdpa

Source Section

FddCell

IurDrncRadioLinkReconfigurationCommitCsSpeech

Number of radio link reconfiguration commit (CsSpeech)

Data Source

RNC C-Node

Source Field

VS.IurDrncRadioLinkReconfigurationCommit.CsSpeech

Source Section

FddCell

© Copyright IBM Corp. 1999, 2009. All rights reserved.

IurDrncRadioLinkReconfigurationCommitCsSpeechHsdpa

Number of radio link reconfiguration commit (CsSpeechHsdpa)

Data Source

RNC C-Node

Source Field

VS.IurDrncRadioLinkReconfigurationCommit.CsSpeechHsdpa

Source Section

FddCell

IurDrncRadioLinkReconfigurationCommitCsSpeechPsDch

Number of radio link reconfiguration commit (CsSpeechPsDch)

Data Source

RNC C-Node

Source Field

VS.IurDrncRadioLinkReconfigurationCommit.CsSpeechPsDch

Source Section

FddCell

IurDrncRadioLinkReconfigurationCommitCsSpeechPsDchPsDch

Number of radio link reconfiguration commit (CsSpeechPsDchPsDch)

Data Source

RNC C-Node

Source Field

VS.IurDrncRadioLinkReconfigurationCommit.CsSpeechPsDchPsDch

Source Section

FddCell

IurDrncRadioLinkReconfigurationCommitCsSpeechPsDchPsHsdpa

Number of radio link reconfiguration commit (CsSpeechPsDchPsHsdpa)

Data Source

RNC C-Node

Source Field

VS.IurDrncRadioLinkReconfigurationCommit.CsSpeechPsDchPsHsdpa

Source Section

FddCell

IurDrncRadioLinkReconfigurationCommitCsStr

Number of radio link reconfiguration commit (CsStr)

Data Source

RNC C-Node

Source Field

VS.IurDrncRadioLinkReconfigurationCommit.CsStr

Source Section

FddCell

IurDrncRadioLinkReconfigurationCommitOther

Number of radio link reconfiguration commit (Other)

Data Source

RNC C-Node

Source Field

VS.IurDrncRadioLinkReconfigurationCommit.Other

Source Section

FddCell

IurDrncRadioLinkReconfigurationCommitPsDchDlDchUl

Number of radio link reconfiguration commit (PsDchDlDchUl)

Data Source

RNC C-Node

© Copyright IBM Corp. 1999, 2009. All rights reserved.

Source Field

VS.IurDrncRadioLinkReconfigurationCommit.PsDchDlDchUl

Source Section

FddCell

IurDrncRadioLinkReconfigurationCommitPsDchPsDch

Number of radio link reconfiguration commit (PsDchPsDch)

Data Source

RNC C-Node

Source Field

VS.IurDrncRadioLinkReconfigurationCommit.PsDchPsDch

Source Section

FddCell

IurDrncRadioLinkReconfigurationCommitPsDchPsHsdpa

Number of radio link reconfiguration commit (PsDchPsHsdpa)

Data Source

RNC C-Node

Source Field

VS.IurDrncRadioLinkReconfigurationCommit.PsDchPsHsdpa

Source Section

FddCell

IurDrncRadioLinkReconfigurationCommitPsHsdpaDchUl

Number of radio link reconfiguration commit (PsHsdpaDchUl)

Data Source

RNC C-Node

Source Field

VS.IurDrncRadioLinkReconfigurationCommit.PsHsdpaDchUl

Source Section

FddCell

IurDrncRadioLinkReconfigurationCommitPsHsdpaDlDchEdchUl

Number of radio link reconfiguration commit (PsHsdpaDlDchEdchUl)

Data Source

RNC C-Node

Source Field

VS.IurDrncRadioLinkReconfigurationCommit.PsHsdpaDlDchEdchUl

Source Section

FddCell

IurDrncRadioLinkReconfigurationCommitPsHsdpaDlEdchUl

Number of radio link reconfiguration commit (PsHsdpaDlEdchUl)

Data Source

RNC C-Node

Source Field

VS.IurDrncRadioLinkReconfigurationCommit.PsHsdpaDlEdchUl

Source Section

FddCell

IurDrncRadioLinkReconfigurationCommitSig

Number of radio link reconfiguration commit (Sig)

Data Source

RNC C-Node

Source Field

VS.IurDrncRadioLinkReconfigurationCommit.Sig

Source Section

FddCell

© Copyright IBM Corp. 1999, 2009. All rights reserved.

IurDrncRadioLinkReconfigurationPrepareSuccessCsData

Number of successful synchronised radio link reconfiguration preparation for drift part of iRNC (CsData)

Data Source

RNC C-Node

Source Field

VS.IurDrncRadioLinkReconfigurationPrepareSuccess.CsData

Source Section

FddCell

IurDrncRadioLinkReconfigurationPrepareSuccessCsDataPsDch

Number of successful synchronised radio link reconfiguration preparation for drift part of iRNC (CsDataPsDch)

Data Source

RNC C-Node

Source Field

VS.IurDrncRadioLinkReconfigurationPrepareSuccess.CsDataPsDch

Source Section

FddCell

IurDrncRadioLinkReconfigurationPrepareSuccessCsDataPsHsdpa

Number of successful synchronised radio link reconfiguration preparation for drift part of iRNC (CsDataPsHsdpa)

Data Source

RNC C-Node

Source Field

VS.IurDrncRadioLinkReconfigurationPrepareSuccess.CsDataPsHsdpa

Source Section

FddCell

IurDrncRadioLinkReconfigurationPrepareSuccessCsSpeech

Number of successful synchronised radio link reconfiguration preparation for drift part of iRNC (CsSpeech)

Data Source

RNC C-Node

Source Field

VS.IurDrncRadioLinkReconfigurationPrepareSuccess.CsSpeech

Source Section

FddCell

IurDrncRadioLinkReconfigurationPrepareSuccessCsSpeechHsdpa

Number of successful synchronised radio link reconfiguration preparation for drift part of iRNC (CsSpeechHsdpa)

Data Source

RNC C-Node

Source Field

VS.IurDrncRadioLinkReconfigurationPrepareSuccess.CsSpeechHsdpa

Source Section

FddCell

IurDrncRadioLinkReconfigurationPrepareSuccessCsSpeechPsDch

Number of successful synchronised radio link reconfiguration preparation for drift part of iRNC (CsSpeechPsDch)

Data Source

RNC C-Node

Source Field

VS.IurDrncRadioLinkReconfigurationPrepareSuccess.CsSpeechPsDch

Source Section

FddCell

© Copyright IBM Corp. 1999, 2009. All rights reserved.

IurDrncRadioLinkReconfigurationPrepareSuccessCsSpeechPsDchPsDch

Number of successful synchronised radio link reconfiguration preparation for drift part of iRNC (CsSpeechPsDchPsDch)

Data Source

RNC C-Node

Source Field

VS.IurDrncRadioLinkReconfigurationPrepareSuccess.CsSpeechPsDchPsDch

Source Section

FddCell

IurDrncRadioLinkReconfigurationPrepareSuccessCsSpeechPsDchPsHsdpa

Number of successful synchronised radio link reconfiguration preparation for drift part of iRNC (CsSpeechPsDchPsHsdpa)

Data Source

RNC C-Node

Source Field

VS.IurDrncRadioLinkReconfigurationPrepareSuccess.CsSpeechPsDchPsHsdpa

Source Section

FddCell

IurDrncRadioLinkReconfigurationPrepareSuccessCsStr

Number of successful synchronised radio link reconfiguration preparation for drift part of iRNC (CsStr)

Data Source

RNC C-Node

Source Field

VS.IurDrncRadioLinkReconfigurationPrepareSuccess.CsStr

Source Section

FddCell

IurDrncRadioLinkReconfigurationPrepareSuccessOther

Number of successful synchronised radio link reconfiguration preparation for drift part of iRNC (Other)

Data Source

RNC C-Node

Source Field

VS.IurDrncRadioLinkReconfigurationPrepareSuccess.Other

Source Section

FddCell

IurDrncRadioLinkReconfigurationPrepareSuccessPsDchDlDchUl

Number of successful synchronised radio link reconfiguration preparation for drift part of iRNC (PsDchDlDchUl)

Data Source

RNC C-Node

Source Field

VS.IurDrncRadioLinkReconfigurationPrepareSuccess.PsDchDlDchUl

Source Section

FddCell

IurDrncRadioLinkReconfigurationPrepareSuccessPsDchPsDch

Number of successful synchronised radio link reconfiguration preparation for drift part of iRNC (PsDchPsDch)

Data Source

RNC C-Node

Source Field

VS.IurDrncRadioLinkReconfigurationPrepareSuccess.PsDchPsDch

Source Section

FddCell

© Copyright IBM Corp. 1999, 2009. All rights reserved.

IurDrncRadioLinkReconfigurationPrepareSuccessPsDchPsHsdpa

Number of successful synchronised radio link reconfiguration preparation for drift part of iRNC (PsDchPsHsdpa)

Data Source

RNC C-Node

Source Field

VS.IurDrncRadioLinkReconfigurationPrepareSuccess.PsDchPsHsdpa

Source Section

FddCell

IurDrncRadioLinkReconfigurationPrepareSuccessPsHsdpaDchUl

Number of successful synchronised radio link reconfiguration preparation for drift part of iRNC (PsHsdpaDchUl)

Data Source

RNC C-Node

Source Field

VS.IurDrncRadioLinkReconfigurationPrepareSuccess.PsHsdpaDchUl

Source Section

FddCell

IurDrncRadioLinkReconfigurationPrepareSuccessPsHsdpaDlDchEdchUl

Number of successful synchronised radio link reconfiguration preparation for drift part of iRNC (PsHsdpaDlDchEdchUl)

Data Source

RNC C-Node

Source Field

VS.IurDrncRadioLinkReconfigurationPrepareSuccess.PsHsdpaDlDchEdchUl

Source Section

FddCell

IurDrncRadioLinkReconfigurationPrepareSuccessPsHsdpaDlEdchUl

Number of successful synchronised radio link reconfiguration preparation for drift part of iRNC (PsHsdpaDlEdchUl)

Data Source

RNC C-Node

Source Field

VS.IurDrncRadioLinkReconfigurationPrepareSuccess.PsHsdpaDlEdchUl

Source Section

FddCell

IurDrncRadioLinkReconfigurationPrepareSuccessSig

Number of successful synchronised radio link reconfiguration preparation for drift part of iRNC (Sig)

Data Source

RNC C-Node

Source Field

VS.IurDrncRadioLinkReconfigurationPrepareSuccess.Sig

Source Section

FddCell

IurDrncRadioLinkReconfigurationPrepareUnsuccessLackBwthIub

Number of unsuccessful radio link reconfiguration preparation for drift part of iRNC (LackBwthIub)

Data Source

RNC C-Node

Source Field

VS.IurDrncRadioLinkReconfigurationPrepareUnsuccess.LackBwthIub

Source Section

FddCell

© Copyright IBM Corp. 1999, 2009. All rights reserved.

IurDrncRadioLinkReconfigurationPrepareUnsuccessLackBwthIur

Number of unsuccessful radio link reconfiguration preparation for drift part of iRNC (LackBwthIur)

Data Source

RNC C-Node

Source Field

VS.IurDrncRadioLinkReconfigurationPrepareUnsuccess.LackBwthIur

Source Section

FddCell

IurDrncRadioLinkReconfigurationPrepareUnsuccessLackTransportIdIub

Number of unsuccessful radio link reconfiguration preparation for drift part of iRNC (LackTransportIdIub)

Data Source

RNC C-Node

Source Field

VS.IurDrncRadioLinkReconfigurationPrepareUnsuccess.LackTransportIdIub

Source Section

FddCell

IurDrncRadioLinkReconfigurationPrepareUnsuccessLackTransportIdIur

Number of unsuccessful radio link reconfiguration preparation for drift part of iRNC (LackTransportIdIur)

Data Source

RNC C-Node

Source Field

VS.IurDrncRadioLinkReconfigurationPrepareUnsuccess.LackTransportIdIur

Source Section

FddCell

IurDrncRadioLinkReconfigurationPrepareUnsuccessNbapRefusal

Number of unsuccessful radio link reconfiguration preparation for drift part of iRNC (NbapRefusal)

Data Source

RNC C-Node

Source Field

VS.IurDrncRadioLinkReconfigurationPrepareUnsuccess.NbapRefusal

Source Section

FddCell

IurDrncRadioLinkReconfigurationPrepareUnsuccessNoRadioResource

Number of unsuccessful radio link reconfiguration preparation for drift part of iRNC (NoRadioResource)

Data Source

RNC C-Node

Source Field

VS.IurDrncRadioLinkReconfigurationPrepareUnsuccess.NoRadioResource

Source Section

FddCell

IurDrncRadioLinkReconfigurationPrepareUnsuccessRequestedConfigurationNotSupport

Number of unsuccessful radio link reconfiguration preparation for drift part of iRNC (RequestedConfigurationNotSupport)

Data Source

RNC C-Node

Source Field

VS.IurDrncRadioLinkReconfigurationPrepareUnsuccess.RequestedConfigurationNotSupport

Source Section

FddCell

© Copyright IBM Corp. 1999, 2009. All rights reserved.

IurDrncRadioLinkReconfigurationPrepareUnsuccessUnspecified

Number of unsuccessful radio link reconfiguration preparation for drift part of iRNC (Unspecified)

Data Source

RNC C-Node

Source Field

VS.IurDrncRadioLinkReconfigurationPrepareUnsuccess.Unspecified

Source Section

FddCell

IurDrncRadioLinkSetupSuccessCsData

Number of successful radio link setup for drift part of iRNC (CsData)

Data Source

RNC C-Node

Source Field

VS.IurDrncRadioLinkSetupSuccess.CsData

Source Section

FddCell

IurDrncRadioLinkSetupSuccessCsDataPsDch

Number of successful radio link setup for drift part of iRNC (CsDataPsDch)

Data Source

RNC C-Node

Source Field

VS.IurDrncRadioLinkSetupSuccess.CsDataPsDch

Source Section

FddCell

IurDrncRadioLinkSetupSuccessCsDataPsHsdpa

Number of successful radio link setup for drift part of iRNC (CsDataPsHsdpa)

Data Source

RNC C-Node

Source Field

VS.IurDrncRadioLinkSetupSuccess.CsDataPsHsdpa

Source Section

FddCell

IurDrncRadioLinkSetupSuccessCsSpeech

Number of successful radio link setup for drift part of iRNC (CsSpeech)

Data Source

RNC C-Node

Source Field

VS.IurDrncRadioLinkSetupSuccess.CsSpeech

Source Section

FddCell

IurDrncRadioLinkSetupSuccessCsSpeechHsdpa

Number of successful radio link setup for drift part of iRNC (CsSpeechHsdpa)

Data Source

RNC C-Node

Source Field

VS.IurDrncRadioLinkSetupSuccess.CsSpeechHsdpa

Source Section

FddCell

IurDrncRadioLinkSetupSuccessCsSpeechPsDch

Number of successful radio link setup for drift part of iRNC (CsSpeechPsDch)

© Copyright IBM Corp. 1999, 2009. All rights reserved.

Data Source

RNC C-Node

Source Field

VS.IurDrncRadioLinkSetupSuccess.CsSpeechPsDch

Source Section

FddCell

IurDrncRadioLinkSetupSuccessCsSpeechPsDchPsDch

Number of successful radio link setup for drift part of iRNC (CsSpeechPsDchPsDch)

Data Source

RNC C-Node

Source Field

VS.IurDrncRadioLinkSetupSuccess.CsSpeechPsDchPsDch

Source Section

FddCell

IurDrncRadioLinkSetupSuccessCsSpeechPsDchPsHsdpa

Number of successful radio link setup for drift part of iRNC (CsSpeechPsDchPsHsdpa)

Data Source

RNC C-Node

Source Field

VS.IurDrncRadioLinkSetupSuccess.CsSpeechPsDchPsHsdpa

Source Section

FddCell

IurDrncRadioLinkSetupSuccessCsStr

Number of successful radio link setup for drift part of iRNC (CsStr)

Data Source

RNC C-Node

Source Field

VS.IurDrncRadioLinkSetupSuccess.CsStr

Source Section

FddCell

IurDrncRadioLinkSetupSuccessOther

Number of successful radio link setup for drift part of iRNC (Other)

Data Source

RNC C-Node

Source Field

VS.IurDrncRadioLinkSetupSuccess.Other

Source Section

FddCell

IurDrncRadioLinkSetupSuccessPsDchDlDchUl

Number of successful radio link setup for drift part of iRNC (PsDchDlDchUl)

Data Source

RNC C-Node

Source Field

VS.IurDrncRadioLinkSetupSuccess.PsDchDlDchUl

Source Section

FddCell

IurDrncRadioLinkSetupSuccessPsDchPsDch

Number of successful radio link setup for drift part of iRNC (PsDchPsDch)

Data Source

RNC C-Node

Source Field

VS.IurDrncRadioLinkSetupSuccess.PsDchPsDch

© Copyright IBM Corp. 1999, 2009. All rights reserved.

Source Section

FddCell

IurDrncRadioLinkSetupSuccessPsDchPsHsdpa

Number of successful radio link setup for drift part of iRNC (PsDchPsHsdpa)

Data Source

RNC C-Node

Source Field

VS.IurDrncRadioLinkSetupSuccess.PsDchPsHsdpa

Source Section

FddCell

IurDrncRadioLinkSetupSuccessPsHsdpaDchUl

Number of successful radio link setup for drift part of iRNC (PsHsdpaDchUl)

Data Source

RNC C-Node

Source Field

VS.IurDrncRadioLinkSetupSuccess.PsHsdpaDchUl

Source Section

FddCell

IurDrncRadioLinkSetupSuccessPsHsdpaDlDchEdchUl

Number of successful radio link setup for drift part of iRNC (PsHsdpaDlDchEdchUl)

Data Source

RNC C-Node

Source Field

VS.IurDrncRadioLinkSetupSuccess.PsHsdpaDlDchEdchUl

Source Section

FddCell

IurDrncRadioLinkSetupSuccessPsHsdpaDlEdchUl

Number of successful radio link setup for drift part of iRNC (PsHsdpaDlEdchUl)

Data Source

RNC C-Node

Source Field

VS.IurDrncRadioLinkSetupSuccess.PsHsdpaDlEdchUl

Source Section

FddCell

IurDrncRadioLinkSetupSuccessSig

Number of successful radio link setup for drift part of iRNC (Sig)

Data Source

RNC C-Node

Source Field

VS.IurDrncRadioLinkSetupSuccess.Sig

Source Section

FddCell

IurDrncRadioLinkSetupUnsuccessNbapRefusal

Number of unsuccessful radio link setup for drift part of iRNC (NbapRefusal)

Data Source

RNC C-Node

Source Field

VS.IurDrncRadioLinkSetupUnsuccess.NbapRefusal

Source Section

FddCell

IurDrncRadioLinkSetupUnsuccessNoRadioResource

Number of unsuccessful radio link setup for drift part of iRNC (NoRadioResource)

© Copyright IBM Corp. 1999, 2009. All rights reserved.

Data Source

RNC C-Node

Source Field

VS.IurDrncRadioLinkSetupUnsuccess.NoRadioResource

Source Section

FddCell

IurDrncRadioLinkSetupUnsuccessRequestedConfigurationNotSupport

Number of unsuccessful radio link setup for drift part of iRNC (RequestedConfigurationNotSupport)

Data Source

RNC C-Node

Source Field

VS.IurDrncRadioLinkSetupUnsuccess.RequestedConfigurationNotSupport

Source Section

FddCell

IurDrncRadioLinkSetupUnsuccessUnspecified

Number of unsuccessful radio link setup for drift part of iRNC (Unspecified)

Data Source

RNC C-Node

Source Field

VS.IurDrncRadioLinkSetupUnsuccess.Unspecified

Source Section

FddCell

IuReleaseCmdAfterCcConAckCsData

Number of RANAP Iu Release Command messages received by the RNC on the Iu after CC Connect Ack. (CsData)

Data Source

RNC C-Node

Source Field

VS.IuReleaseCmdAfterCcConAck.CsData

Source Section

FddCell

IuReleaseCmdAfterCcConAckCsSpeech

Number of RANAP Iu Release Command messages received by the RNC on the Iu after CC Connect Ack. (CsSpeech)

Data Source

RNC C-Node

Source Field

VS.IuReleaseCmdAfterCcConAck.CsSpeech

Source Section

FddCell

IuReleaseCmdAfterCcConAckCsStr144

Number of RANAP Iu Release Command messages received by the RNC on the Iu after CC Connect Ack. (CsStr144)

Data Source

RNC C-Node

Source Field

VS.IuReleaseCmdAfterCcConAck.CsStr144

Source Section

FddCell

IuReleaseCmdAfterCcConAckCsStr576

Number of RANAP Iu Release Command messages received by the RNC on the Iu after CC Connect Ack. (CsStr576)

© Copyright IBM Corp. 1999, 2009. All rights reserved.

Data Source

RNC C-Node

Source Field

VS.IuReleaseCmdAfterCcConAck.CsStr576

Source Section

FddCell

IuReleaseCmdAfterCcConAckOther

Number of RANAP Iu Release Command messages received by the RNC on the Iu after CC Connect Ack. (Other)

Data Source

RNC C-Node

Source Field

VS.IuReleaseCmdAfterCcConAck.Other

Source Section

FddCell

IuReleaseCmdBeforeCcConAckCsData

Number of RANAP Iu Release Command messages received by RNC on the Iu before CC Connect Ack. (CsData)

Data Source

RNC C-Node

Source Field

VS.IuReleaseCmdBeforeCcConAck.CsData

Source Section

FddCell

IuReleaseCmdBeforeCcConAckCsSpeechNbLrAmr

Number of RANAP Iu Release Command messages received by RNC on the Iu before CC Connect Ack. (CsSpeechNbLrAmr)

Data Source

RNC C-Node

Source Field

VS.IuReleaseCmdBeforeCcConAck.CsSpeechNbLrAmr

Source Section

FddCell

IuReleaseCmdBeforeCcConAckCsSpeechWbAmr

Number of RANAP Iu Release Command messages received by RNC on the Iu before CC Connect Ack. (CsSpeechWbAmr)

Data Source

RNC C-Node

Source Field

VS.IuReleaseCmdBeforeCcConAck.CsSpeechWbAmr

Source Section

FddCell

IuReleaseCmdBeforeCcConAckCsStr144

Number of RANAP Iu Release Command messages received by RNC on the Iu before CC Connect Ack. (CsStr144)

Data Source

RNC C-Node

Source Field

VS.IuReleaseCmdBeforeCcConAck.CsStr144

Source Section

FddCell

IuReleaseCmdBeforeCcConAckCsStr576

Number of RANAP Iu Release Command messages received by RNC on the Iu before CC Connect Ack. (CsStr576)

© Copyright IBM Corp. 1999, 2009. All rights reserved.

Data Source

RNC C-Node

Source Field

VS.IuReleaseCmdBeforeCcConAck.CsStr576

Source Section

FddCell

IuReleaseCmdBeforeCcConAckOther

Number of RANAP Iu Release Command messages received by RNC on the Iu before CC Connect Ack. (Other)

Data Source

RNC C-Node

Source Field

VS.IuReleaseCmdBeforeCcConAck.Other

Source Section

FddCell

IuReleaseCmdBeforeCcConAckSig

Number of RANAP Iu Release Command messages received by RNC on the Iu before CC Connect Ack. (Sig)

Data Source

RNC C-Node

Source Field

VS.IuReleaseCmdBeforeCcConAck.Sig

Source Section

FddCell

IuReleaseCommandCsNoRemainingRab

Number of RANAP/IU_RELEASE_COMMAND messages received by RNC. (NoRemainingRab)

Data Source

RNC C-Node

Source Field

VS.IuReleaseCommandCs.NoRemainingRab

Source Section

FddCell

IuReleaseCommandCsNormalRelease

Number of RANAP/IU_RELEASE_COMMAND messages received by RNC. (NormalRelease)

Data Source

RNC C-Node

Source Field

VS.IuReleaseCommandCs.NormalRelease

Source Section

FddCell

IuReleaseCommandCsOamIntervention

Number of RANAP/IU_RELEASE_COMMAND messages received by RNC. (OamIntervention)

Data Source

RNC C-Node

Source Field

VS.IuReleaseCommandCs.OamIntervention

Source Section

FddCell

IuReleaseCommandCsOther

Number of RANAP/IU_RELEASE_COMMAND messages received by RNC. (Other)

© Copyright IBM Corp. 1999, 2009. All rights reserved.

Data Source

RNC C-Node

Source Field

VS.IuReleaseCommandCs.Other

Source Section

FddCell

IuReleaseCommandCsReleaseDueToUtranGeneratedReason

Number of RANAP/IU_RELEASE_COMMAND messages received by RNC. (ReleaseDueToUtranGeneratedReason)

Data Source

RNC C-Node

Source Field

VS.IuReleaseCommandCs.ReleaseDueToUtranGeneratedReason

Source Section

FddCell

IuReleaseCommandCsRelocationCancelled

Number of RANAP/IU_RELEASE_COMMAND messages received by RNC. (RelocationCancelled)

Data Source

RNC C-Node

Source Field

VS.IuReleaseCommandCs.RelocationCancelled

Source Section

FddCell

IuReleaseCommandCsSucc3G2GReloc

Number of RANAP/IU_RELEASE_COMMAND messages received by RNC. (Succ3G2GReloc)

Data Source

RNC C-Node

Source Field

VS.IuReleaseCommandCs.Succ3G2GReloc

Source Section

FddCell

IuReleaseCommandCsSucc3G3GReloc

Number of RANAP/IU_RELEASE_COMMAND messages received by RNC. (Succ3G3GReloc)

Data Source

RNC C-Node

Source Field

VS.IuReleaseCommandCs.Succ3G3GReloc

Source Section

FddCell

IuReleaseCommandCsUnspecifiedFailure

Number of RANAP/IU_RELEASE_COMMAND messages received by RNC. (UnspecifiedFailure)

Data Source

RNC C-Node

Source Field

VS.IuReleaseCommandCs.UnspecifiedFailure

Source Section

FddCell

IuReleaseCommandCsUserInactivity

Number of RANAP/IU_RELEASE_COMMAND messages received by RNC. (UserInactivity)

© Copyright IBM Corp. 1999, 2009. All rights reserved.

Data Source

RNC C-Node

Source Field

VS.IuReleaseCommandCs.UserInactivity

Source Section

FddCell

IuReleaseCommandPsNoRemainingRab

Number of RANAP/IU_RELEASE_COMMAND messages received by RNC. (NoRemainingRab)

Data Source

RNC C-Node

Source Field

VS.IuReleaseCommandPs.NoRemainingRab

Source Section

FddCell

IuReleaseCommandPsNormalRelease

Number of RANAP/IU_RELEASE_COMMAND messages received by RNC. (NormalRelease)

Data Source

RNC C-Node

Source Field

VS.IuReleaseCommandPs.NormalRelease

Source Section

FddCell

IuReleaseCommandPsOamIntervention

Number of RANAP/IU_RELEASE_COMMAND messages received by RNC. (OamIntervention)

Data Source

RNC C-Node

Source Field

VS.IuReleaseCommandPs.OamIntervention

Source Section

FddCell

IuReleaseCommandPsOther

Number of RANAP/IU_RELEASE_COMMAND messages received by RNC. (Other)

Data Source

RNC C-Node

Source Field

VS.IuReleaseCommandPs.Other

Source Section

FddCell

IuReleaseCommandPsReleaseDueToUtranGeneratedReason

Number of RANAP/IU_RELEASE_COMMAND messages received by RNC. (ReleaseDueToUtranGeneratedReason)

Data Source

RNC C-Node

Source Field

VS.IuReleaseCommandPs.ReleaseDueToUtranGeneratedReason

Source Section

FddCell

IuReleaseCommandPsRelocationCancelled

Number of RANAP/IU_RELEASE_COMMAND messages received by RNC. (RelocationCancelled)

© Copyright IBM Corp. 1999, 2009. All rights reserved.

Data Source

RNC C-Node

Source Field

VS.IuReleaseCommandPs.RelocationCancelled

Source Section

FddCell

IuReleaseCommandPsSucc3G2GReloc

Number of RANAP/IU_RELEASE_COMMAND messages received by RNC. (Succ3G2GReloc)

Data Source

RNC C-Node

Source Field

VS.IuReleaseCommandPs.Succ3G2GReloc

Source Section

FddCell

IuReleaseCommandPsSucc3G3GReloc

Number of RANAP/IU_RELEASE_COMMAND messages received by RNC. (Succ3G3GReloc)

Data Source

RNC C-Node

Source Field

VS.IuReleaseCommandPs.Succ3G3GReloc

Source Section

FddCell

IuReleaseCommandPsUnspecifiedFailure

Number of RANAP/IU_RELEASE_COMMAND messages received by RNC. (UnspecifiedFailure)

Data Source

RNC C-Node

Source Field

VS.IuReleaseCommandPs.UnspecifiedFailure

Source Section

FddCell

IuReleaseCommandPsUserInactivity

Number of RANAP/IU_RELEASE_COMMAND messages received by RNC. (UserInactivity)

Data Source

RNC C-Node

Source Field

VS.IuReleaseCommandPs.UserInactivity

Source Section

FddCell

IuReleaseCompleteCsDlAsCnfCsData

Number of RANAP Iu Release Complete sent by RNC to CN on the Iu interface on CS domain (DlAsCnfCsData)

Data Source

RNC C-Node

Source Field

VS.IuReleaseCompleteCs.DlAsCnfCsData

Source Section

FddCell

IuReleaseCompleteCsDlAsCnfCsSigPs

Number of RANAP Iu Release Complete sent by RNC to CN on the Iu interface on CS domain (DlAsCnfCsSigPs)

© Copyright IBM Corp. 1999, 2009. All rights reserved.

Data Source

RNC C-Node

Source Field

VS.IuReleaseCompleteCs.DlAsCnfCsSigPs

Source Section

FddCell

IuReleaseCompleteCsDlAsCnfCsSpeechNbLrAmr

Number of RANAP Iu Release Complete sent by RNC to CN on the Iu interface on CS domain (DlAsCnfCsSpeechNbLrAmr)

Data Source

RNC C-Node

Source Field

VS.IuReleaseCompleteCs.DlAsCnfCsSpeechNbLrAmr

Source Section

FddCell

IuReleaseCompleteCsDlAsCnfCsSpeechWbAmr

Number of RANAP Iu Release Complete sent by RNC to CN on the Iu interface on CS domain (DlAsCnfCsSpeechWbAmr)

Data Source

RNC C-Node

Source Field

VS.IuReleaseCompleteCs.DlAsCnfCsSpeechWbAmr

Source Section

FddCell

IuReleaseCompleteCsDlAsCnfCsStr14_4

Number of RANAP Iu Release Complete sent by RNC to CN on the Iu interface on CS domain (DlAsCnfCsStr14_4)

Data Source

RNC C-Node

Source Field

VS.IuReleaseCompleteCs.DlAsCnfCsStr14_4

Source Section

FddCell

IuReleaseCompleteCsDlAsCnfCsStr57_6

Number of RANAP Iu Release Complete sent by RNC to CN on the Iu interface on CS domain (DlAsCnfCsStr57_6)

Data Source

RNC C-Node

Source Field

VS.IuReleaseCompleteCs.DlAsCnfCsStr57_6

Source Section

FddCell

IuReleaseCompleteCsDlAsCnfOther

Number of RANAP Iu Release Complete sent by RNC to CN on the Iu interface on CS domain (DlAsCnfOther)

Data Source

RNC C-Node

Source Field

VS.IuReleaseCompleteCs.DlAsCnfOther

Source Section

FddCell

IuReleaseCompleteCsDlAsCnfSig

Number of RANAP Iu Release Complete sent by RNC to CN on the Iu interface on CS domain (DlAsCnfSig)

© Copyright IBM Corp. 1999, 2009. All rights reserved.

Data Source

RNC C-Node

Source Field

VS.IuReleaseCompleteCs.DlAsCnfSig

Source Section

FddCell

IuReleaseReqAfterCcConAckCsData

Number of RANAP Iu Release Request messages sent by RNC on the Iu after CC Connect Ack. (CsData)

Data Source

RNC C-Node

Source Field

VS.IuReleaseReqAfterCcConAck.CsData

Source Section

FddCell

IuReleaseReqAfterCcConAckCsSpeech

Number of RANAP Iu Release Request messages sent by RNC on the Iu after CC Connect Ack. (CsSpeech)

Data Source

RNC C-Node

Source Field

VS.IuReleaseReqAfterCcConAck.CsSpeech

Source Section

FddCell

IuReleaseReqAfterCcConAckCsStr144

Number of RANAP Iu Release Request messages sent by RNC on the Iu after CC Connect Ack. (CsStr144)

Data Source

RNC C-Node

Source Field

VS.IuReleaseReqAfterCcConAck.CsStr144

Source Section

FddCell

IuReleaseReqAfterCcConAckCsStr576

Number of RANAP Iu Release Request messages sent by RNC on the Iu after CC Connect Ack. (CsStr576)

Data Source

RNC C-Node

Source Field

VS.IuReleaseReqAfterCcConAck.CsStr576

Source Section

FddCell

IuReleaseReqAfterCcConAckOther

Number of RANAP Iu Release Request messages sent by RNC on the Iu after CC Connect Ack. (Other)

Data Source

RNC C-Node

Source Field

VS.IuReleaseReqAfterCcConAck.Other

Source Section

FddCell

IuReleaseReqBeforeCcConAckCsData

Number of RANAP Iu Release Request messages sent by RNC to the Iu before CC Connect Ack. (CsData)

© Copyright IBM Corp. 1999, 2009. All rights reserved.

Data Source

RNC C-Node

Source Field

VS.IuReleaseReqBeforeCcConAck.CsData

Source Section

FddCell

IuReleaseReqBeforeCcConAckCsSpeechNbLrAmr

Number of RANAP Iu Release Request messages sent by RNC to the Iu before CC Connect Ack. (CsSpeechNbLrAmr)

Data Source

RNC C-Node

Source Field

VS.IuReleaseReqBeforeCcConAck.CsSpeechNbLrAmr

Source Section

FddCell

IuReleaseReqBeforeCcConAckCsSpeechWbAmr

Number of RANAP Iu Release Request messages sent by RNC to the Iu before CC Connect Ack. (CsSpeechWbAmr)

Data Source

RNC C-Node

Source Field

VS.IuReleaseReqBeforeCcConAck.CsSpeechWbAmr

Source Section

FddCell

IuReleaseReqBeforeCcConAckCsStr144

Number of RANAP Iu Release Request messages sent by RNC to the Iu before CC Connect Ack. (CsStr144)

Data Source

RNC C-Node

Source Field

VS.IuReleaseReqBeforeCcConAck.CsStr144

Source Section

FddCell

IuReleaseReqBeforeCcConAckCsStr576

Number of RANAP Iu Release Request messages sent by RNC to the Iu before CC Connect Ack. (CsStr576)

Data Source

RNC C-Node

Source Field

VS.IuReleaseReqBeforeCcConAck.CsStr576

Source Section

FddCell

IuReleaseReqBeforeCcConAckOther

Number of RANAP Iu Release Request messages sent by RNC to the Iu before CC Connect Ack. (Other)

Data Source

RNC C-Node

Source Field

VS.IuReleaseReqBeforeCcConAck.Other

Source Section

FddCell

IuReleaseReqBeforeCcConAckSig

Number of RANAP Iu Release Request messages sent by RNC to the Iu before CC Connect Ack. (Sig)

© Copyright IBM Corp. 1999, 2009. All rights reserved.

Data Source

RNC C-Node

Source Field

VS.IuReleaseReqBeforeCcConAck.Sig

Source Section

FddCell

IuReleaseReqCsAbnormalConditionTimerRelocExpiry

Number of RANAP/IU_RELEASE_REQUEST sent by RNC to CoreNetwork CS (AbnormalConditionTimerRelocExpiry)

Data Source

RNC C-Node

Source Field

VS.IuReleaseReqCs.AbnormalConditionTimerRelocExpiry

Source Section

FddCell

IuReleaseReqCsConnectionWithNodeBLost

Number of RANAP/IU_RELEASE_REQUEST sent by RNC to CoreNetwork CS (ConnectionWithNodeBLost)

Data Source

RNC C-Node

Source Field

VS.IuReleaseReqCs.ConnectionWithNodeBLost

Source Section

FddCell

IuReleaseReqCsDlRLCErrSRB

Number of RANAP/IU_RELEASE_REQUEST sent by RNC to CoreNetwork CS (DlRLCErrSRB)

Data Source

RNC C-Node

Source Field

VS.IuReleaseReqCs.DlRLCErrSRB

Source Section

FddCell

IuReleaseReqCsFailureInTheRadioInterfaceProcedure

Number of RANAP/IU_RELEASE_REQUEST sent by RNC to CoreNetwork CS (FailureInTheRadioInterfaceProcedure)

Data Source

RNC C-Node

Source Field

VS.IuReleaseReqCs.FailureInTheRadioInterfaceProcedure

Source Section

FddCell

IuReleaseReqCsNoRemainingRAB

Number of RANAP/IU_RELEASE_REQUEST sent by RNC to CoreNetwork CS (NoRemainingRAB)

Data Source

RNC C-Node

Source Field

VS.IuReleaseReqCs.NoRemainingRAB

Source Section

FddCell

IuReleaseReqCsNoResourceAvailable

Number of RANAP/IU_RELEASE_REQUEST sent by RNC to CoreNetwork CS (NoResourceAvailable)

© Copyright IBM Corp. 1999, 2009. All rights reserved.

Data Source

RNC C-Node

Source Field

VS.IuReleaseReqCs.NoResourceAvailable

Source Section

FddCell

IuReleaseReqCsOamIntervention

Number of RANAP/IU_RELEASE_REQUEST sent by RNC to CoreNetwork CS (OamIntervention)

Data Source

RNC C-Node

Source Field

VS.IuReleaseReqCs.OamIntervention

Source Section

FddCell

IuReleaseReqCsOtherCause

Number of RANAP/IU_RELEASE_REQUEST sent by RNC to CoreNetwork CS (OtherCause)

Data Source

RNC C-Node

Source Field

VS.IuReleaseReqCs.OtherCause

Source Section

FddCell

IuReleaseReqCsRadioConnectionWithUeLost

Number of RANAP/IU_RELEASE_REQUEST sent by RNC to CoreNetwork CS (RadioConnectionWithUeLost)

Data Source

RNC C-Node

Source Field

VS.IuReleaseReqCs.RadioConnectionWithUeLost

Source Section

FddCell

IuReleaseReqCsReleaseDueToUtranGeneratedReason

Number of RANAP/IU_RELEASE_REQUEST sent by RNC to CoreNetwork CS (ReleaseDueToUtranGeneratedReason)

Data Source

RNC C-Node

Source Field

VS.IuReleaseReqCs.ReleaseDueToUtranGeneratedReason

Source Section

FddCell

IuReleaseReqCsRepeatedIntegrityCheckFailure

Number of RANAP/IU_RELEASE_REQUEST sent by RNC to CoreNetwork CS (RepeatedIntegrityCheckFailure)

Data Source

RNC C-Node

Source Field

VS.IuReleaseReqCs.RepeatedIntegrityCheckFailure

Source Section

FddCell

IuReleaseReqCsT360Expiry

Number of RANAP/IU_RELEASE_REQUEST sent by RNC to CoreNetwork CS (T360Expiry)

© Copyright IBM Corp. 1999, 2009. All rights reserved.

Data Source

RNC C-Node

Source Field

VS.IuReleaseReqCs.T360Expiry

Source Section

FddCell

IuReleaseReqCsUeGeneratedSignallingConnectionRelease

Number of RANAP/IU_RELEASE_REQUEST sent by RNC to CoreNetwork CS (UeGeneratedSignallingConnectionRelease)

Data Source

RNC C-Node

Source Field

VS.IuReleaseReqCs.UeGeneratedSignallingConnectionRelease

Source Section

FddCell

IuReleaseReqCsUlRLCErrSRB

Number of RANAP/IU_RELEASE_REQUEST sent by RNC to CoreNetwork CS (UlRLCErrSRB)

Data Source

RNC C-Node

Source Field

VS.IuReleaseReqCs.UlRLCErrSRB

Source Section

FddCell

IuReleaseReqCsUnspecifiedFailure

Number of RANAP/IU_RELEASE_REQUEST sent by RNC to CoreNetwork CS (UnspecifiedFailure)

Data Source

RNC C-Node

Source Field

VS.IuReleaseReqCs.UnspecifiedFailure

Source Section

FddCell

IuReleaseReqPsAbnormalConditionTimerRelocExpiry

Number of RANAP/IU_RELEASE_REQUEST sent by RNC to CoreNetwork PS (AbnormalConditionTimerRelocExpiry)

Data Source

RNC C-Node

Source Field

VS.IuReleaseReqPs.AbnormalConditionTimerRelocExpiry

Source Section

FddCell

IuReleaseReqPsCellReselFail

Number of RANAP/IU_RELEASE_REQUEST sent by RNC to CoreNetwork PS (CellReselFail)

Data Source

RNC C-Node

Source Field

VS.IuReleaseReqPs.CellReselFail

Source Section

FddCell

IuReleaseReqPsConnectionWithNodeBLost

Number of RANAP/IU_RELEASE_REQUEST sent by RNC to CoreNetwork PS (ConnectionWithNodeBLost)

© Copyright IBM Corp. 1999, 2009. All rights reserved.

Data Source

RNC C-Node

Source Field

VS.IuReleaseReqPs.ConnectionWithNodeBLost

Source Section

FddCell

IuReleaseReqPsDlRLCErrSRB

Number of RANAP/IU_RELEASE_REQUEST sent by RNC to CoreNetwork PS (DlRLCErrSRB)

Data Source

RNC C-Node

Source Field

VS.IuReleaseReqPs.DlRLCErrSRB

Source Section

FddCell

IuReleaseReqPsDlRLCErrTRB

Number of RANAP/IU_RELEASE_REQUEST sent by RNC to CoreNetwork PS (DlRLCErrTRB)

Data Source

RNC C-Node

Source Field

VS.IuReleaseReqPs.DlRLCErrTRB

Source Section

FddCell

IuReleaseReqPsFailureInTheRadioInterfaceProcedure

Number of RANAP/IU_RELEASE_REQUEST sent by RNC to CoreNetwork PS (FailureInTheRadioInterfaceProcedure)

Data Source

RNC C-Node

Source Field

VS.IuReleaseReqPs.FailureInTheRadioInterfaceProcedure

Source Section

FddCell

IuReleaseReqPsIuUserPlaneFailure

Number of RANAP/IU_RELEASE_REQUEST sent by RNC to CoreNetwork PS (IuUserPlaneFailure)

Data Source

RNC C-Node

Source Field

VS.IuReleaseReqPs.IuUserPlaneFailure

Source Section

FddCell

IuReleaseReqPsNoRemainingRAB

Number of RANAP/IU_RELEASE_REQUEST sent by RNC to CoreNetwork PS (NoRemainingRAB)

Data Source

RNC C-Node

Source Field

VS.IuReleaseReqPs.NoRemainingRAB

Source Section

FddCell

IuReleaseReqPsNoResourceAvailable

Number of RANAP/IU_RELEASE_REQUEST sent by RNC to CoreNetwork PS (NoResourceAvailable)

© Copyright IBM Corp. 1999, 2009. All rights reserved.

Data Source

RNC C-Node

Source Field

VS.IuReleaseReqPs.NoResourceAvailable

Source Section

FddCell

IuReleaseReqPsOamIntervention

Number of RANAP/IU_RELEASE_REQUEST sent by RNC to CoreNetwork PS (OamIntervention)

Data Source

RNC C-Node

Source Field

VS.IuReleaseReqPs.OamIntervention

Source Section

FddCell

IuReleaseReqPsPhyChnReestabFail

Number of RANAP/IU_RELEASE_REQUEST sent by RNC to CoreNetwork PS (PhyChnReestabFail)

Data Source

RNC C-Node

Source Field

VS.IuReleaseReqPs.PhyChnReestabFail

Source Section

FddCell

IuReleaseReqPsRadioCnxUeLost

Number of RANAP/IU_RELEASE_REQUEST sent by RNC to CoreNetwork PS (RadioCnxUeLost)

Data Source

RNC C-Node

Source Field

VS.IuReleaseReqPs.RadioCnxUeLost

Source Section

FddCell

IuReleaseReqPsReleaseDueToUtranGeneratedReason

Number of RANAP/IU_RELEASE_REQUEST sent by RNC to CoreNetwork PS (ReleaseDueToUtranGeneratedReason)

Data Source

RNC C-Node

Source Field

VS.IuReleaseReqPs.ReleaseDueToUtranGeneratedReason

Source Section

FddCell

IuReleaseReqPsRepeatedIntegrityCheckFailure

Number of RANAP/IU_RELEASE_REQUEST sent by RNC to CoreNetwork PS (RepeatedIntegrityCheckFailure)

Data Source

RNC C-Node

Source Field

VS.IuReleaseReqPs.RepeatedIntegrityCheckFailure

Source Section

FddCell

IuReleaseReqPSSum

Total number of RANAP/IU_RELEASE_REQUEST sent by RNC to CoreNetwork PS (Sum)

© Copyright IBM Corp. 1999, 2009. All rights reserved.

Data Source

RNC C-Node

Source Field

VS.IuReleaseReq.PS.Sum

Source Section

FddCell

IuReleaseReqPsT305Expiry

Number of RANAP/IU_RELEASE_REQUEST sent by RNC to CoreNetwork PS (T305Expiry)

Data Source

RNC C-Node

Source Field

VS.IuReleaseReqPs.T305Expiry

Source Section

FddCell

IuReleaseReqPsT360Expiry

Number of RANAP/IU_RELEASE_REQUEST sent by RNC to CoreNetwork PS (T360Expiry)

Data Source

RNC C-Node

Source Field

VS.IuReleaseReqPs.T360Expiry

Source Section

FddCell

IuReleaseReqPsUeGeneratedSignallingConnectionRelease

Number of RANAP/IU_RELEASE_REQUEST sent by RNC to CoreNetwork PS (UeGeneratedSignallingConnectionRelease)

Data Source

RNC C-Node

Source Field

VS.IuReleaseReqPs.UeGeneratedSignallingConnectionRelease

Source Section

FddCell

IuReleaseReqPsUlRLCErrSRB

Number of RANAP/IU_RELEASE_REQUEST sent by RNC to CoreNetwork PS (UlRLCErrSRB)

Data Source

RNC C-Node

Source Field

VS.IuReleaseReqPs.UlRLCErrSRB

Source Section

FddCell

IuReleaseReqPsUlRLCErrTRB

Number of RANAP/IU_RELEASE_REQUEST sent by RNC to CoreNetwork PS (UlRLCErrTRB)

Data Source

RNC C-Node

Source Field

VS.IuReleaseReqPs.UlRLCErrTRB

Source Section

FddCell

IuReleaseReqPsUnspecifiedFailure

Number of RANAP/IU_RELEASE_REQUEST sent by RNC to CoreNetwork PS (UnspecifiedFailure)

© Copyright IBM Corp. 1999, 2009. All rights reserved.

Data Source

RNC C-Node

Source Field

VS.IuReleaseReqPs.UnspecifiedFailure

Source Section

FddCell

IuReleaseReqPsUserInactivity

Number of RANAP/IU_RELEASE_REQUEST sent by RNC to CoreNetwork PS (UserInactivity)

Data Source

RNC C-Node

Source Field

VS.IuReleaseReqPs.UserInactivity

Source Section

FddCell

IuReleaseReqPsUtranPageFail

Number of RANAP/IU_RELEASE_REQUEST sent by RNC to CoreNetwork PS (UtranPageFail)

Data Source

RNC C-Node

Source Field

VS.IuReleaseReqPs.UtranPageFail

Source Section

FddCell

IuRelocationRequestFailuresCs2Gto3GIuCnxCtxt

Number of relocation requests failures on CS Iu interface (2Gto3GIuCnxCtxt)

Data Source

RNC C-Node

Source Field

VS.IuRelocationRequestFailuresCs.2Gto3GIuCnxCtxt

Source Section

FddCell

IuRelocationRequestFailuresCs2Gto3GRejectionCannotEstablishLocation

Number of relocation requests failures on CS Iu interface (2Gto3GRejectionCannotEstablishLocation)

Data Source

RNC C-Node

Source Field

VS.IuRelocationRequestFailuresCs.2Gto3GRejectionCannotEstablishLocation

Source Section

FddCell

IuRelocationRequestFailuresCs2Gto3GRejectionDueToFailureInTargetSystem

Number of relocation requests failures on CS Iu interface (2Gto3GRejectionDueToFailureInTargetSystem)

Data Source

RNC C-Node

Source Field

VS.IuRelocationRequestFailuresCs.2Gto3GRejectionDueToFailureInTargetSystem

Source Section

FddCell

IuRelocationRequestFailuresCs2Gto3GRejectionDueToTimeOut

Number of relocation requests failures on CS Iu interface (2Gto3GRejectionDueToTimeOut)

© Copyright IBM Corp. 1999, 2009. All rights reserved.

Data Source

RNC C-Node

Source Field

VS.IuRelocationRequestFailuresCs.2Gto3GRejectionDueToTimeOut

Source Section

FddCell

IuRelocationRequestFailuresCs2Gto3GRejectionOtherCauses

Number of relocation requests failures on CS Iu interface (2Gto3GRejectionOtherCauses)

Data Source

RNC C-Node

Source Field

VS.IuRelocationRequestFailuresCs.2Gto3GRejectionOtherCauses

Source Section

FddCell

IuRelocationRequestFailuresCs2Gto3GRRCCtxt

Number of relocation requests failures on CS Iu interface (2Gto3GRRCCtxt)

Data Source

RNC C-Node

Source Field

VS.IuRelocationRequestFailuresCs.2Gto3GRRCCtxt

Source Section

FddCell

IuRelocationRequestFailuresCs3Gto3GIuCnxCtxt

Number of relocation requests failures on CS Iu interface (3Gto3GIuCnxCtxt)

Data Source

RNC C-Node

Source Field

VS.IuRelocationRequestFailuresCs.3Gto3GIuCnxCtxt

Source Section

FddCell

IuRelocationRequestFailuresCs3Gto3GIuCnxCtxtUeNotInv

Number of relocation requests failures on CS Iu interface (3Gto3GIuCnxCtxtUeNotInv)

Data Source

RNC C-Node

Source Field

VS.IuRelocationRequestFailuresCs.3Gto3GIuCnxCtxtUeNotInv

Source Section

FddCell

IuRelocationRequestFailuresCs3Gto3GOtherRelocFailureUeNotInv

Number of relocation requests failures on CS Iu interface (3Gto3GOtherRelocFailureUeNotInv)

Data Source

RNC C-Node

Source Field

VS.IuRelocationRequestFailuresCs.3Gto3GOtherRelocFailureUeNotInv

Source Section

FddCell

IuRelocationRequestFailuresCs3Gto3GRejectionCannotEstablishLocation

Number of relocation requests failures on CS Iu interface (3Gto3GRejectionCannotEstablishLocation)

Data Source

RNC C-Node

© Copyright IBM Corp. 1999, 2009. All rights reserved.

Source Field

VS.IuRelocationRequestFailuresCs.3Gto3GRejectionCannotEstablishLocation

Source Section

FddCell

IuRelocationRequestFailuresCs3Gto3GRejectionDueToFailureInTargetSystem

Number of relocation requests failures on CS Iu interface (3Gto3GRejectionDueToFailureInTargetSystem)

Data Source

RNC C-Node

Source Field

VS.IuRelocationRequestFailuresCs.3Gto3GRejectionDueToFailureInTargetSystem

Source Section

FddCell

IuRelocationRequestFailuresCs3Gto3GRejectionDueToTimeOut

Number of relocation requests failures on CS Iu interface (3Gto3GRejectionDueToTimeOut)

Data Source

RNC C-Node

Source Field

VS.IuRelocationRequestFailuresCs.3Gto3GRejectionDueToTimeOut

Source Section

FddCell

IuRelocationRequestFailuresCs3Gto3GRejectionOtherCauses

Number of relocation requests failures on CS Iu interface (3Gto3GRejectionOtherCauses)

Data Source

RNC C-Node

Source Field

VS.IuRelocationRequestFailuresCs.3Gto3GRejectionOtherCauses

Source Section

FddCell

IuRelocationRequestFailuresCs3Gto3GRelocFailureInTargetSysUeNotInv

Number of relocation requests failures on CS Iu interface (3Gto3GRelocFailureInTargetSysUeNotInv)

Data Source

RNC C-Node

Source Field

VS.IuRelocationRequestFailuresCs.3Gto3GRelocFailureInTargetSysUeNotInv

Source Section

FddCell

IuRelocationRequestFailuresCs3Gto3GRelocTimeOutUeNotInv

Number of relocation requests failures on CS Iu interface (3Gto3GRelocTimeOutUeNotInv)

Data Source

RNC C-Node

Source Field

VS.IuRelocationRequestFailuresCs.3Gto3GRelocTimeOutUeNotInv

Source Section

FddCell

IuRelocationRequestFailuresCs3Gto3GRRCCtxt

Number of relocation requests failures on CS Iu interface (3Gto3GRRCCtxt)

Data Source

RNC C-Node

© Copyright IBM Corp. 1999, 2009. All rights reserved.

Source Field

VS.IuRelocationRequestFailuresCs.3Gto3GRRCCtxt

Source Section

FddCell

IuRelocationRequestFailuresPs3Gto3GIuCnxCtxt

Number of relocation requests failures on PS Iu interface (3Gto3GIuCnxCtxt)

Data Source

RNC C-Node

Source Field

VS.IuRelocationRequestFailuresPs.3Gto3GIuCnxCtxt

Source Section

FddCell

IuRelocationRequestFailuresPs3Gto3GIuCnxCtxtUeNotInv

Number of relocation requests failures on PS Iu interface (3Gto3GIuCnxCtxtUeNotInv)

Data Source

RNC C-Node

Source Field

VS.IuRelocationRequestFailuresPs.3Gto3GIuCnxCtxtUeNotInv

Source Section

FddCell

IuRelocationRequestFailuresPs3Gto3GOtherRelocFailureUeNotInv

Number of relocation requests failures on PS Iu interface (3Gto3GOtherRelocFailureUeNotInv)

Data Source

RNC C-Node

Source Field

VS.IuRelocationRequestFailuresPs.3Gto3GOtherRelocFailureUeNotInv

Source Section

FddCell

IuRelocationRequestFailuresPs3Gto3GRejectionCannotEstablishLocation

Number of relocation requests failures on PS Iu interface (3Gto3GRejectionCannotEstablishLocation)

Data Source

RNC C-Node

Source Field

VS.IuRelocationRequestFailuresPs.3Gto3GRejectionCannotEstablishLocation

Source Section

FddCell

IuRelocationRequestFailuresPs3Gto3GRejectionDueToFailureInTargetSystem

Number of relocation requests failures on PS Iu interface (3Gto3GRejectionDueToFailureInTargetSystem)

Data Source

RNC C-Node

Source Field

VS.IuRelocationRequestFailuresPs.3Gto3GRejectionDueToFailureInTargetSystem

Source Section

FddCell

IuRelocationRequestFailuresPs3Gto3GRejectionDueToTimeOut

Number of relocation requests failures on PS Iu interface (3Gto3GRejectionDueToTimeOut)

Data Source

RNC C-Node

Source Field

VS.IuRelocationRequestFailuresPs.3Gto3GRejectionDueToTimeOut

© Copyright IBM Corp. 1999, 2009. All rights reserved.

Source Section

FddCell

IuRelocationRequestFailuresPs3Gto3GRejectionOtherCauses

Number of relocation requests failures on PS Iu interface (3Gto3GRejectionOtherCauses)

Data Source

RNC C-Node

Source Field

VS.IuRelocationRequestFailuresPs.3Gto3GRejectionOtherCauses

Source Section

FddCell

IuRelocationRequestFailuresPs3Gto3GRelocFailureInTargetSysUeNotInv

Number of relocation requests failures on PS Iu interface (3Gto3GRelocFailureInTargetSysUeNotInv)

Data Source

RNC C-Node

Source Field

VS.IuRelocationRequestFailuresPs.3Gto3GRelocFailureInTargetSysUeNotInv

Source Section

FddCell

IuRelocationRequestFailuresPs3Gto3GRelocTimeOutUeNotInv

Number of relocation requests failures on PS Iu interface (3Gto3GRelocTimeOutUeNotInv)

Data Source

RNC C-Node

Source Field

VS.IuRelocationRequestFailuresPs.3Gto3GRelocTimeOutUeNotInv

Source Section

FddCell

IuRelocationRequestFailuresPs3Gto3GRRCCtxt

Number of relocation requests failures on PS Iu interface (3Gto3GRRCCtxt)

Data Source

RNC C-Node

Source Field

VS.IuRelocationRequestFailuresPs.3Gto3GRRCCtxt

Source Section

FddCell

IuRelocationRequestsCs2Gto3GRelocation

Number of relocation request at Iu interface (Cs2Gto3GRelocation)

Data Source

RNC C-Node

Source Field

VS.IuRelocationRequests.Cs2Gto3GRelocation

Source Section

FddCell

IuRelocationRequestsCs3Gto3GRelocation

Number of relocation request at Iu interface (Cs3Gto3GRelocation)

Data Source

RNC C-Node

Source Field

VS.IuRelocationRequests.Cs3Gto3GRelocation

Source Section

FddCell

© Copyright IBM Corp. 1999, 2009. All rights reserved.

IuRelocationRequestsCs3Gto3GRelocationUeNotInv

Number of relocation request at Iu interface (Cs3Gto3GRelocationUeNotInv)

Data Source

RNC C-Node

Source Field

VS.IuRelocationRequests.Cs3Gto3GRelocationUeNotInv

Source Section

FddCell

IuRelocationRequestsPs3Gto3GRelocation

Number of relocation request at Iu interface (Ps3Gto3GRelocation)

Data Source

RNC C-Node

Source Field

VS.IuRelocationRequests.Ps3Gto3GRelocation

Source Section

FddCell

IuRelocationRequestsPs3Gto3GRelocationUeNotInv

Number of relocation request at Iu interface (Ps3Gto3GRelocationUeNotInv)

Data Source

RNC C-Node

Source Field

VS.IuRelocationRequests.Ps3Gto3GRelocationUeNotInv

Source Section

FddCell

lac

Location Area Code, LAC (Ref. 3GPP TS 23.003)

Data Source

OMC-U Bulk CM

Source Field

un:lac

Source Section

UtranCell

localCellId

Local Cell id is used to uniquely identify the set of resources defined in a Node B to support a cell (as defined by a Cid Ref. 3GPP TS 25.401).

Data Source

OMC-U Bulk CM

Source Field

un:localCellId

Source Section

UtranCell

LocalRegState1FailureNbapFail

Local Registration Failure at state 1. (NbapFail)

Data Source

RNC C-Node

Source Field

VS.LocalRegState1Failure.NbapFail

Source Section

FddCell

LocalRegState1FailureRrcFail

Local Registration Failure at state 1. (RrcFail)

© Copyright IBM Corp. 1999, 2009. All rights reserved.

Data Source

RNC C-Node

Source Field

VS.LocalRegState1Failure.RrcFail

Source Section

FddCell

LocRegCallAnswCsDetach

Location Registration (CsDetach)

Data Source

RNC C-Node

Source Field

VS.LocRegCallAnsw.CsDetach

Source Section

FddCell

LocRegCallAnswCsRegist

Location Registration (CsRegist)

Data Source

RNC C-Node

Source Field

VS.LocRegCallAnsw.CsRegist

Source Section

FddCell

LocRegCallAnswPsDetach

Location Registration (PsDetach)

Data Source

RNC C-Node

Source Field

VS.LocRegCallAnsw.PsDetach

Source Section

FddCell

LocRegCallAnswPsRegist

Location Registration (PsRegist)

Data Source

RNC C-Node

Source Field

VS.LocRegCallAnsw.PsRegist

Source Section

FddCell

LocRegCallAttCsDetach

Location Registration (CsDetach)

Data Source

RNC C-Node

Source Field

VS.LocRegCallAtt.CsDetach

Source Section

FddCell

LocRegCallAttCsRegist

Location Registration (CsRegist)

Data Source

RNC C-Node

Source Field

VS.LocRegCallAtt.CsRegist

© Copyright IBM Corp. 1999, 2009. All rights reserved.

Source Section

FddCell

LocRegCallAttPsDetach

Location Registration (PsDetach)

Data Source

RNC C-Node

Source Field

VS.LocRegCallAtt.PsDetach

Source Section

FddCell

LocRegCallAttPsRegist

Location Registration (PsRegist)

Data Source

RNC C-Node

Source Field

VS.LocRegCallAtt.PsRegist

Source Section

FddCell

LocRegFailCsEtcFailState2

Location Registration (CsEtcFailState2)

Data Source

RNC C-Node

Source Field

VS.LocRegFail.CsEtcFailState2

Source Section

FddCell

LocRegFailEtcFailState1

Location Registration (EtcFailState1)

Data Source

RNC C-Node

Source Field

VS.LocRegFail.EtcFailState1

Source Section

FddCell

LocRegFailPsEtcFailState2

Location Registration (PsEtcFailState2)

Data Source

RNC C-Node

Source Field

VS.LocRegFail.PsEtcFailState2

Source Section

FddCell

LocRegRRCAttDetach

Number of Local Registration message received (Detach)

Data Source

RNC C-Node

Source Field

VS.LocRegRRCAtt.Detach

Source Section

FddCell

LocRegRRCAttRegist

Number of Local Registration message received (Regist)

© Copyright IBM Corp. 1999, 2009. All rights reserved.

Data Source

RNC C-Node

Source Field

VS.LocRegRRCAtt.Regist

Source Section

FddCell

LS_BCIdAtt_EmSrv

Number of BCID attempts for emergency services

Data Source

RNC

Source Field

VS.LS.BCIdAtt.EmSrv

Source Section

UtranCell

LS_BCIdAttCS_NEmSrv

Number of BCID attempts for non-emergency services through CS

Data Source

RNC

Source Field

VS.LS.BCIdAttCS.NEmSrv

Source Section

UtranCell

LS_BCIdAttPS_NEmSrv

Number of BCID attempts for non-emergency services through PS

Data Source

RNC

Source Field

VS.LS.BCIdAttPS.NEmSrv

Source Section

UtranCell

LS_ECIdAtt_EmSrv

Number of ECID attempts for emergency services

Data Source

RNC

Source Field

VS.LS.ECIdAtt.EmSrv

Source Section

UtranCell

LS_ECIdAttCS_NEmSrv

Number of ECID attempts for non-emergency services through CS

Data Source

RNC

Source Field

VS.LS.ECIdAttCS.NEmSrv

Source Section

UtranCell

LS_ECIdCancel_EmSrv

Number of ECID attempts for emergency services cancelled either due to normal call termination based on Iu Release Command or on CN request.

Data Source

RNC

© Copyright IBM Corp. 1999, 2009. All rights reserved.

Source Field

VS.LS.ECIdCancel.EmSrv

Source Section

UtranCell

LS_ECIdCancelCS_NEmSrv

Number of ECID attempts for non-emergency services cancelled either due to normal call termination based on Iu Release Command or on MSC request.

Data Source

RNC

Source Field

VS.LS.ECIdCancelCS.NEmSrv

Source Section

UtranCell

LS_ECIdSucc_EmSrv

Number of successful ECID attempts for emergency services

Data Source

RNC

Source Field

VS.LS.ECIdSucc.EmSrv

Source Section

UtranCell

LS_ECIdSuccCS_NEmSrv

Number of successful ECID attempts for non-emergency services through CS

Data Source

RNC

Source Field

VS.LS.ECIdSuccCS.NEmSrv

Source Section

UtranCell

LS_GeoPosReq_EmSrv

Total Number of Position Requests for emergency services

Data Source

RNC

Source Field

VS.LS.GeoPosReq.EmSrv

Source Section

UtranCell

LS_GeoPosReqCS_NEmSrv

Total Number of Position Requests for non-emergency services initiated through CS

Data Source

RNC

Source Field

VS.LS.GeoPosReqCS.NEmSrv

Source Section

UtranCell

LS_GeoPosReqPS_NEmSrv

Total Number of Position Requests for non-emergency services initiated through PS

Data Source

RNC

Source Field

VS.LS.GeoPosReqPS.NEmSrv

© Copyright IBM Corp. 1999, 2009. All rights reserved.

Source Section

UtranCell

LS_GPSAtt_EmSrv

Number of GPS attempts for emergency services

Data Source

RNC

Source Field

VS.LS.GPSAtt.EmSrv

Source Section

UtranCell

LS_GPSAttCS_NEmSrv

Number of GPS attempts for non-emergency services through CS

Data Source

RNC

Source Field

VS.LS.GPSAttCS.NEmSrv

Source Section

UtranCell

LS_GPSCancel_EmSrv

Number of GPS attempts for emergency services cancelled either due to normal call termination based on Iu Release Command or on CN request.

Data Source

RNC

Source Field

VS.LS.GPSCancel.EmSrv

Source Section

UtranCell

LS_GPSCancelCS_NEmSrv

Number of GPS attempts for non-emergency services cancelled either due to normal call termination based on Iu Release Command or on MSC request.

Data Source

RNC

Source Field

VS.LS.GPSCancelCS.NEmSrv

Source Section

UtranCell

LS_GPSFail_EmSrv_SanCheck

Number of failed sanity checks for emergency services

Data Source

RNC

Source Field

VS.LS.GPSFail.EmSrv.SanCheck

Source Section

UtranCell

LS_GPSFail_NEmSrv_SanCheck

Number of failed sanity checks for non-emergency services

Data Source

RNC

Source Field

VS.LS.GPSFail.NEmSrv.SanCheck

© Copyright IBM Corp. 1999, 2009. All rights reserved.

Source Section

UtranCell

LS_GPSSucc_EmSrv

Number of successful GPS attempts for emergency services

Data Source

RNC

Source Field

VS.LS.GPSSucc.EmSrv

Source Section

UtranCell

LS_GPSSuccCS_NEmSrv

Number of successful GPS attempts for non-emergency services through CS

Data Source

RNC

Source Field

VS.LS.GPSSuccCS.NEmSrv

Source Section

UtranCell

LSEcidAttCSNEmSrv

Number of CellId/RTT positioning attempts for non-emergency services. (NEmSrv)

Data Source

RNC C-Node

Source Field

VS.LS.EcidAttCS.NEmSrv

Source Section

FddCell

LSEcidAttEmsrv

Number of CellId/RTT positioning attempts for emergency services. (Emsrv)

Data Source

RNC C-Node

Source Field

VS.LS.EcidAtt.Emsrv

Source Section

FddCell

LSEcidCancelCSNEmSrv

Number of CellId/RTT location attempts for non-emergency service cancelled either due to normal call termination based on Iu Release Command or on MSC request. Pegged on the FDDCell MO representing the reference cell on the serving RNC. (NEmSrv)

Data Source

RNC C-Node

Source Field

VS.LS.EcidCancelCS.NEmSrv

Source Section

FddCell

LSEcidCancelEmSrv

Number of CellId/RTT location attempts for emergency service cancelled either due to normal call termination or location report termination. Pegged on the FDDCell MO representing the reference cell on the serving RNC. (EmSrv)

Data Source

RNC C-Node

Source Field

VS.LS.EcidCancel.EmSrv

Source Section

FddCell

© Copyright IBM Corp. 1999, 2009. All rights reserved.

LSEcidSuccCSNEmSrv

Number of successful location of the UE using CellId/RTT positioning methods for non-emergency services initiated through CS. (NEmSrv)

Data Source

RNC C-Node

Source Field

VS.LS.EcidSuccCS.NEmSrv

Source Section

FddCell

LSEcidSuccEmSrv

Number of successful location of the UE using CellId/RTT positioning methods for emergency services. (EmSrv)

Data Source

RNC C-Node

Source Field

VS.LS.EcidSucc.EmSrv

Source Section

FddCell

LSGPSAttCSNEmSrv

Number of GPS positioning attempts for non-emergency services initiated through CS. (NEmSrv)

Data Source

RNC C-Node

Source Field

VS.LS.GPSAttCS.NEmSrv

Source Section

FddCell

LSGPSAttEmSrv

Number of GPS positioning attempts for emergency services (EmSrv)

Data Source

RNC C-Node

Source Field

VS.LS.GPSAtt.EmSrv

Source Section

FddCell

LSGPSCancelCSNEmSrv

Number of GPS attempts for non-emergency services cancelled either due to normal call termination based on Iu Release Command or on MSC request. (NEmSrv)

Data Source

RNC C-Node

Source Field

VS.LS.GPSCancelCS.NEmSrv

Source Section

FddCell

LSGPSCancelEmSrv

Number of GPS attempts for emergency services cancelled either due to normal call termination based on Iu Release Command or on CN request. (EmSrv)

Data Source

RNC C-Node

Source Field

VS.LS.GPSCancel.EmSrv

Source Section

FddCell

© Copyright IBM Corp. 1999, 2009. All rights reserved.

LSGPSSuccCSNEmSrv

Number of successful GPS attempts for non-emergency services initiated through CS. (NEmSrv)

Data Source

RNC C-Node

Source Field

VS.LS.GPSSuccCS.NEmSrv

Source Section

FddCell

LSGPSSuccEmSrv

Number of successful GPS attempts for emergency service (EmSrv)

Data Source

RNC C-Node

Source Field

VS.LS.GPSSucc.EmSrv

Source Section

FddCell

MAC_DataFramePayload_HsDsch

Amount of Iub interface HS-DSCH DATA FRAME payload data in bits

Data Source

NodeB

Source Field

VS.MAC.DataFramePayload.HsDsch

Source Section

MAC Related Measurements

MAC_FlowInd_HS_GbrFailed

This measurement provides the number of 1 second periods where HSDPA flows fail the GBR, because (GBR * sample period) > credited bits.

Data Source

NodeB

Source Field

VS.MAC.FlowInd.HS.GbrFailed

Source Section

HSDPA resource related Performance Measurements

MAC_FlowInd_HS_GbrFulfilled

This measurement provides the number of 1 second periods where HSDPA flows fulfill the GBR.

Data Source

NodeB

Source Field

VS.MAC.FlowInd.HS.GbrFulfilled

Source Section

HSDPA resource related Performance Measurements

MAC_NumPdu_HS_16QAM

Number of MAC-hs PDUs with the 16QAM modulation scheme

Data Source

NodeB

Source Field

VS.MAC.NumPdu.HS.16QAM

Source Section

Modulation Scheme Usage Measurements

© Copyright IBM Corp. 1999, 2009. All rights reserved.

MAC_NumPdu_HS_Ack

Number of Transport Blocks Acknowledged with ACK

Data Source

NodeB

Source Field

VS.MAC.NumPdu.HS.Ack

Source Section

MAC Related Measurements

MAC_NumPdu_HS_Discard

Number of Transport Blocks discarded

Data Source

NodeB

Source Field

VS.MAC.NumPdu.HS.Discard

Source Section

MAC Related Measurements

MAC_NumPdu_HS_Nack

Number of Transport Blocks Acknowledged with NACK

Data Source

NodeB

Source Field

VS.MAC.NumPdu.HS.Nack

Source Section

MAC Related Measurements

MAC_NumPdu_HS_QPSK

Number of MAC-hs PDUs with the QPSK modulation scheme

Data Source

NodeB

Source Field

VS.MAC.NumPdu.HS.QPSK

Source Section

Modulation Scheme Usage Measurements

MAC_NumPdu_HS_Retrans

Number of Transport Blocks retransmitted

Data Source

NodeB

Source Field

VS.MAC.NumPdu.HS.Retrans

Source Section

MAC Related Measurements

MAC_NumPduQueued_MacD_HsDsch_Max

Maximum HS-DSCH Priority Queue Length

Data Source

NodeB

Source Field

VS.MAC.NumPduQueued.MacD.HsDsch.Max

Source Section

MAC Related Measurements

MAC_PayloadData_HS_ACKed

Amount of Uu interface MAC-hs payload data ACKed

Data Source

NodeB

© Copyright IBM Corp. 1999, 2009. All rights reserved.

Source Field

VS.MAC.PayloadData.HS.ACKed

Source Section

MAC-hs Scheduler Measurements

MAC_PayloadData_HS_Retrans

Amount of Uu interface MAC-hs payload data retransmitted

Data Source

NodeB

Source Field

VS.MAC.PayloadData.HS.Retrans

Source Section

MAC-hs Scheduler Measurements

MAC_PayloadData_HS_ToRadio

Amount of Uu interface MAC-hs payload data

Data Source

NodeB

Source Field

VS.MAC.PayloadData.HS.ToRadio

Source Section

MAC-hs Scheduler Measurements

MAC_ProvidedBitRate_EDCH_Max

Maximum provided bit rate for E-DCH. The counter provides the maximum value of the provided bit rate for E-DCH per granularity period (bits/s).

Data Source

NodeB

Source Field

VS.MAC.ProvidedBitRate.EDCH.Max

Source Section

UtranCell

MAC_ProvidedBitRate_HsDsch_Max

The maximum value of MAC-d PDU bits/s, successfully transmitted over the radio interface, for any of the priority classes associated with the UE context specific HS-DSCH Priority Queues

Data Source

NodeB

Source Field

VS.MAC.ProvidedBitRate.HsDsch.Max

Source Section

Node B Measurements - Bitrate and Carrier Power

maximumTransmissionPower

The maximum transmission power of a cell, DL Power (Ref. 3GPP TS 25.433).

Data Source

OMC-U Bulk CM

Source Field

un:maximumTransmissionPower

Source Section

UtranCell

MbmsPtmRbSetupReqBgnd64

Number of MBMS PTM RB setup decision (leading or not to a PTM RB Setup, ie. incremented even if CAC rejects the setup) (Bgnd64)

Data Source

RNC C-Node

© Copyright IBM Corp. 1999, 2009. All rights reserved.

Source Field

VS.MbmsPtmRbSetupReq.Bgnd64

Source Section

FddCell

MbmsPtmRbSetupReqStr128

Number of MBMS PTM RB setup decision (leading or not to a PTM RB Setup, ie. incremented even if CAC rejects the setup) (Str128)

Data Source

RNC C-Node

Source Field

VS.MbmsPtmRbSetupReq.Str128

Source Section

FddCell

MbmsPtmRbSetupReqStr256

Number of MBMS PTM RB setup decision (leading or not to a PTM RB Setup, ie. incremented even if CAC rejects the setup) (Str256)

Data Source

RNC C-Node

Source Field

VS.MbmsPtmRbSetupReq.Str256

Source Section

FddCell

MbmsPtmRbSetupSucBgnd64

Number of MBMS PTM RB successfully setup (Bgnd64)

Data Source

RNC C-Node

Source Field

VS.MbmsPtmRbSetupSuc.Bgnd64

Source Section

FddCell

MbmsPtmRbSetupSucStr128

Number of MBMS PTM RB successfully setup (Str128)

Data Source

RNC C-Node

Source Field

VS.MbmsPtmRbSetupSuc.Str128

Source Section

FddCell

MbmsPtmRbSetupSucStr256

Number of MBMS PTM RB successfully setup (Str256)

Data Source

RNC C-Node

Source Field

VS.MbmsPtmRbSetupSuc.Str256

Source Section

FddCell

MbmsPtmRbSetupUnsucLackOfBandwidthOnIub

Number of MBMS PTM RB unsuccessfully setup (LackOfBandwidthOnIub)

Data Source

RNC C-Node

Source Field

VS.MbmsPtmRbSetupUnsuc.LackOfBandwidthOnIub

© Copyright IBM Corp. 1999, 2009. All rights reserved.

Source Section

FddCell

MbmsPtmRbSetupUnsucLackOfTransportIdOnIub

Number of MBMS PTM RB unsuccessfully setup (LackOfTransportIdOnIub)

Data Source

RNC C-Node

Source Field

VS.MbmsPtmRbSetupUnsuc.LackOfTransportIdOnIub

Source Section

FddCell

MbmsPtmRbSetupUnsucNbapComTransChnlSetupFailure

Number of MBMS PTM RB unsuccessfully setup (NbapComTransChnlSetupFailure)

Data Source

RNC C-Node

Source Field

VS.MbmsPtmRbSetupUnsuc.NbapComTransChnlSetupFailure

Source Section

FddCell

MbmsPtmRbSetupUnsucNbapComTransChnlSetupTimeout

Number of MBMS PTM RB unsuccessfully setup (NbapComTransChnlSetupTimeout)

Data Source

RNC C-Node

Source Field

VS.MbmsPtmRbSetupUnsuc.NbapComTransChnlSetupTimeout

Source Section

FddCell

MbmsPtmRbSetupUnsucRrmLackOfRes

Number of MBMS PTM RB unsuccessfully setup (RrmLackOfRes)

Data Source

RNC C-Node

Source Field

VS.MbmsPtmRbSetupUnsuc.RrmLackOfRes

Source Section

FddCell

MeanNbrHSDPACodesAlloc

This measurement provides the mean number of HSDPA Codes allocated.

Data Source

RNC

Source Field

VS.MeanNbrHSDPACodesAlloc

Source Section

HSDPA resource related Performance Measurements

MeasCallFailTraceDetectCellFullEvt

Number of Indication of at least one available Call Failure Trace due to a Detected Cell. (FullEvt)

Data Source

RNC C-Node

Source Field

VS.MeasCallFailTraceDetectCell.FullEvt

Source Section

FddCell

© Copyright IBM Corp. 1999, 2009. All rights reserved.

MeasCallFailTraceDetectCellOtherEvt

Number of Indication of at least one available Call Failure Trace due to a Detected Cell. (OtherEvt)

Data Source

RNC C-Node

Source Field

VS.MeasCallFailTraceDetectCell.OtherEvt

Source Section

FddCell

MeasCtrlCellListSizeInterFreqAvg

Size of the compound inter-frequency neighbor list. (Avg)

Data Source

RNC C-Node

Source Field

VS.MeasCtrlCellListSizeInterFreq.Avg

Source Section

FddCell

MeasCtrlCellListSizeInterFreqCum

Size of the compound inter-frequency neighbor list. (Cum)

Data Source

RNC C-Node

Source Field

VS.MeasCtrlCellListSizeInterFreq.Cum

Source Section

FddCell

MeasCtrlCellListSizeInterFreqMax

Size of the compound inter-frequency neighbor list. (Max)

Data Source

RNC C-Node

Source Field

VS.MeasCtrlCellListSizeInterFreq.Max

Source Section

FddCell

MeasCtrlCellListSizeInterFreqMin

Size of the compound inter-frequency neighbor list. (Min)

Data Source

RNC C-Node

Source Field

VS.MeasCtrlCellListSizeInterFreq.Min

Source Section

FddCell

MeasCtrlCellListSizeInterFreqNbEvt

Size of the compound inter-frequency neighbor list. (NbEvt)

Data Source

RNC C-Node

Source Field

VS.MeasCtrlCellListSizeInterFreq.NbEvt

Source Section

FddCell

MeasCtrlCellListSizeInterRATAvg

Size of the compound inter-RAT neighbor list. (Avg)

© Copyright IBM Corp. 1999, 2009. All rights reserved.

Data Source

RNC C-Node

Source Field

VS.MeasCtrlCellListSizeInterRAT.Avg

Source Section

FddCell

MeasCtrlCellListSizeInterRATCum

Size of the compound inter-RAT neighbor list. (Cum)

Data Source

RNC C-Node

Source Field

VS.MeasCtrlCellListSizeInterRAT.Cum

Source Section

FddCell

MeasCtrlCellListSizeInterRATMax

Size of the compound inter-RAT neighbor list. (Max)

Data Source

RNC C-Node

Source Field

VS.MeasCtrlCellListSizeInterRAT.Max

Source Section

FddCell

MeasCtrlCellListSizeInterRATMin

Size of the compound inter-RAT neighbor list. (Min)

Data Source

RNC C-Node

Source Field

VS.MeasCtrlCellListSizeInterRAT.Min

Source Section

FddCell

MeasCtrlCellListSizeInterRATNbEvt

Size of the compound inter-RAT neighbor list. (NbEvt)

Data Source

RNC C-Node

Source Field

VS.MeasCtrlCellListSizeInterRAT.NbEvt

Source Section

FddCell

MeasEvent1ACell

Number of Event 1A triggered by a Cell of the Monitored Set (used to add RL on relative threshold criteria). (MeasEvent1ACell)

Data Source

RNC C-Node

Source Field

VS.MeasEvent1ACell

Source Section

FddCell

MeasEvent1BCell

Number of Event 1B (used to delete RL on relative threshold criteria). (MeasEvent1BCell)

Data Source

RNC C-Node

© Copyright IBM Corp. 1999, 2009. All rights reserved.

Source Field

VS.MeasEvent1BCell

Source Section

FddCell

MeasEvent1CCell

Number of Event 1C (used to add RL and delete RL on relative threshold criteria). (MeasEvent1CCell)

Data Source

RNC C-Node

Source Field

VS.MeasEvent1CCell

Source Section

FddCell

MeasEvent1DCell

Number of Event 1D (used to change Primary RL on relative threshold criteria). (MeasEvent1DCell)

Data Source

RNC C-Node

Source Field

VS.MeasEvent1DCell

Source Section

FddCell

MeasEvent1ECell

Number of Event 1E triggered by a Cell of the Monitored Set (used o add RL on absolute threshold criteria). (MeasEvent1ECell)

Data Source

RNC C-Node

Source Field

VS.MeasEvent1ECell

Source Section

FddCell

MeasEvent1FCell

Number of Event 1F (used to delete RL on absolute threshold criteria). (MeasEvent1FCell)

Data Source

RNC C-Node

Source Field

VS.MeasEvent1FCell

Source Section

FddCell

MeasEvent1JCell

Number of EVENT 1J (MeasEvent1JCell)

Data Source

RNC C-Node

Source Field

VS.MeasEvent1JCell

Source Section

FddCell

MeasEvent2DCellCpichEcNo

Number of Event 2D (used for Alarm Measurement Criteria). (CpichEcNo)

Data Source

RNC C-Node

Source Field

VS.MeasEvent2DCell.CpichEcNo

© Copyright IBM Corp. 1999, 2009. All rights reserved.

Source Section

FddCell

MeasEvent2DCellCpichRscp

Number of Event 2D (used for Alarm Measurement Criteria). (CpichRscp)

Data Source

RNC C-Node

Source Field

VS.MeasEvent2DCell.CpichRscp

Source Section

FddCell

MeasEvent2FCellCpichEcNo

Number of Event 2F (used for Alarm Measurement Criteria). (CpichEcNo)

Data Source

RNC C-Node

Source Field

VS.MeasEvent2FCell.CpichEcNo

Source Section

FddCell

MeasEvent2FCellCpichRscp

Number of Event 2F (used for Alarm Measurement Criteria). (CpichRscp)

Data Source

RNC C-Node

Source Field

VS.MeasEvent2FCell.CpichRscp

Source Section

FddCell

MeasEvent6ACell

Number of Event 6A (used for Alarm Measurement Criteria) (MeasEvent6ACell)

Data Source

RNC C-Node

Source Field

VS.MeasEvent6ACell

Source Section

FddCell

MeasEvent6BCell

Number of Event 6B (used for Alarm Measurement Criteria) (MeasEvent6BCell)

Data Source

RNC C-Node

Source Field

VS.MeasEvent6BCell

Source Section

FddCell

MeasurementControlCellListSizeAvg

Average number of cells in the compounding cell list for that primary cell (Avg)

Data Source

RNC C-Node

Source Field

VS.MeasurementControlCellListSize.Avg

Source Section

FddCell

MeasurementControlCellListSizeCum

Average number of cells in the compounding cell list for that primary cell (Cum)

© Copyright IBM Corp. 1999, 2009. All rights reserved.

Data Source

RNC C-Node

Source Field

VS.MeasurementControlCellListSize.Cum

Source Section

FddCell

MeasurementControlCellListSizeMax

Average number of cells in the compounding cell list for that primary cell (Max)

Data Source

RNC C-Node

Source Field

VS.MeasurementControlCellListSize.Max

Source Section

FddCell

MeasurementControlCellListSizeMin

Average number of cells in the compounding cell list for that primary cell (Min)

Data Source

RNC C-Node

Source Field

VS.MeasurementControlCellListSize.Min

Source Section

FddCell

MeasurementControlCellListSizeNbEvt

Average number of cells in the compounding cell list for that primary cell (NbEvt)

Data Source

RNC C-Node

Source Field

VS.MeasurementControlCellListSize.NbEvt

Source Section

FddCell

MeasurementControlFailureEvt1A1B1C1D1E1F

Number of RRC measurement control failure messages received from the UE (Evt1A1B1C1D1E1F)

Data Source

RNC C-Node

Source Field

VS.MeasurementControlFailure.Evt1A1B1C1D1E1F

Source Section

FddCell

MeasurementControlFailureEvt2CCpichEcNo

Number of RRC measurement control failure messages received from the UE (Evt2CCpichEcNo)

Data Source

RNC C-Node

Source Field

VS.MeasurementControlFailure.Evt2CCpichEcNo

Source Section

FddCell

MeasurementControlFailureEvt2CCpichRscp

Number of RRC measurement control failure messages received from the UE (Evt2CCpichRscp)

Data Source

RNC C-Node

© Copyright IBM Corp. 1999, 2009. All rights reserved.

Source Field

VS.MeasurementControlFailure.Evt2CCpichRscp

Source Section

FddCell

MeasurementControlFailureEvt2D2FCpichEcNo

Number of RRC measurement control failure messages received from the UE (Evt2D2FCpichEcNo)

Data Source

RNC C-Node

Source Field

VS.MeasurementControlFailure.Evt2D2FCpichEcNo

Source Section

FddCell

MeasurementControlFailureEvt2D2FCpichRscp

Number of RRC measurement control failure messages received from the UE (Evt2D2FCpichRscp)

Data Source

RNC C-Node

Source Field

VS.MeasurementControlFailure.Evt2D2FCpichRscp

Source Section

FddCell

MeasurementControlFailureEvt3C

Number of RRC measurement control failure messages received from the UE (Evt3C)

Data Source

RNC C-Node

Source Field

VS.MeasurementControlFailure.Evt3C

Source Section

FddCell

MeasurementControlFailureEvt6A6B

Number of RRC measurement control failure messages received from the UE (Evt6A6B)

Data Source

RNC C-Node

Source Field

VS.MeasurementControlFailure.Evt6A6B

Source Section

FddCell

MeasurementControlFailureOther

Number of RRC measurement control failure messages received from the UE (Other)

Data Source

RNC C-Node

Source Field

VS.MeasurementControlFailure.Other

Source Section

FddCell

MM_CellUpdateReq_CellReselect

Number of Cell Update Requests for Cell Reselection.

Data Source

RNC

Source Field

VS.MM.CellUpdateReq.CellReselect

© Copyright IBM Corp. 1999, 2009. All rights reserved.

Source Section

Paging, Cell and URA Update

MM_CellUpdateReq_PagingResponse

Number of Cell Update Requests for Paging Responses

Data Source

RNC

Source Field

VS.MM.CellUpdateReq.PagingResponse

Source Section

Paging, Cell and URA Update

MM_CellUpdateReq_PeriodUpdate

Number of Cell Update Request with Cause Periodic Update in Cell FACH

Data Source

RNC

Source Field

VS.MM.CellUpdateReq.PeriodUpdate

Source Section

Paging, Cell and URA Update

MM_CellUpdateReq_ReenterSA

Number of Cell Update Requests for Re-entering SA

Data Source

RNC

Source Field

VS.MM.CellUpdateReq.ReenterSA

Source Section

Paging, Cell and URA Update

MM_CellUpdateReq_RLCError

Number of Cell Update Requests for RLC Error

Data Source

RNC

Source Field

VS.MM.CellUpdateReq.RLCError

Source Section

Paging, Cell and URA Update

MM_CellUpdateReq_RLF

Number of Cell Update Requests for RLF

Data Source

RNC

Source Field

VS.MM.CellUpdateReq.RLF

Source Section

Paging, Cell and URA Update

MM_CellUpdateReq_ULData

Number of Cell Update Requests for UL Data

Data Source

RNC

Source Field

VS.MM.CellUpdateReq.ULData

Source Section

Paging, Cell and URA Update

MM_PagAttDiscard

Number of Paging Attempts discarded by RNC

© Copyright IBM Corp. 1999, 2009. All rights reserved.

Data Source

RNC

Source Field

VS.MM.PagAttDiscard

Source Section

Paging, Cell and URA Update

MM_PagAttDiscard_sum

The measurement provides the number of paging attempts discarded by the RNC TPU

Data Source

RNC

Source Field

VS.MM.PagAttDiscard.sum

Source Section

UtranCell

MM_RRC_ConnDrop_CellReselDRNC

Number of Pre-emptively Dropped RRC Connection due to DRNC move in URA_PCH

Data Source

RNC

Source Field

VS.MM.RRC.ConnDrop.CellReselDRNC

Source Section

Dropped RRC Connections

MM_RRC_ConnDrop_DCH_HSDSCH

Number of Dropped RRC Connections during DCH to HS-DSCH reconfiguration.

Data Source

RNC

Source Field

VS.MM.RRC.ConnDrop.DCH_HSDSCH

Source Section

Radio Bearer Reconfiguration DCH to HS-DSCH

MM_RRC_ConnDrop_dch_pch_ReconfigFailure

Number of Dropped RRC Connections due to Failed Reconfiguration Response on Cell DCH to URA_PCH transition

Data Source

RNC

Source Field

VS.MM.RRC.ConnDrop.dch_pch_ReconfigFailure

Source Section

Dropped RRC Connections

MM_RRC_ConnDrop_fach_dch_ReconfigFailure

Number of Dropped RRC Connections during Reconfiguration: Cell FACH to Cell DCH

Data Source

RNC

Source Field

VS.MM.RRC.ConnDrop.fach_dch_ReconfigFailure

Source Section

Dropped RRC Connections

MM_RRC_ConnDrop_HSDSCH_DCH

Number of Dropped RRC Connections during HS-DSCH to DCH reconfiguration.

Data Source

RNC

© Copyright IBM Corp. 1999, 2009. All rights reserved.

Source Field

VS.MM.RRC.ConnDrop.HSDSCH_DCH

Source Section

Radio Bearer Reconfiguration HS-DSCH to DCH

MM_RRC_ConnDrop_pch_dch_FailureIE

Number of Dropped RRC Connections due to UE specified error on URA_PCH to Cell DCH transition

Data Source

RNC

Source Field

VS.MM.RRC.ConnDrop.pch_dch_FailureIE

Source Section

Dropped RRC Connections

MM_RRC_ConnDrop_pch_dch_PhyChan

Number of Dropped RRC Connections due to physical channel re-establishment failure on URA_PCH to Cell DCH transition

Data Source

RNC

Source Field

VS.MM.RRC.ConnDrop.pch_dch_PhyChan

Source Section

Dropped RRC Connections

MM_RRC_ConnDrop_pch_dch_ReconfigFailure

Number of Dropped RRC Connections due to Failed Reconfiguration Response on URA_PCH to Cell DCH transition

Data Source

RNC

Source Field

VS.MM.RRC.ConnDrop.pch_dch_ReconfigFailure

Source Section

Dropped RRC Connections

MM_RRC_ConnDrop_ReenterSA

Number of Dropped RRC Connections due to UE Re-entering SA

Data Source

RNC

Source Field

VS.MM.RRC.ConnDrop.ReenterSA

Source Section

Dropped RRC Connections

MM_RRC_ConnDrop_UE_Inactivity

Number of dropped RRC Connections due to non-URA_PCH timeout

Data Source

RNC

Source Field

VS.MM.RRC.ConnDrop.UE_Inactivity

Source Section

Dropped RRC Connections

MM_RRCConnDrop_CellResel_CellUp

Number of Dropped RRC Connection due to no UE response during Cell Reselection

Data Source

RNC

Source Field

VS.MM.RRCConnDrop.CellResel_CellUp

© Copyright IBM Corp. 1999, 2009. All rights reserved.

Source Section

Paging, Cell and URA Update

MM_UraUpdateReq_PeriodUpdate

Number of URA Update Requests for Periodic Update

Data Source

RNC

Source Field

VS.MM.UraUpdateReq.PeriodUpdate

Source Section

Paging, Cell and URA Update

MM_UraUpdateReq_UraChange

Number of URA Update Requests for URA Change

Data Source

RNC

Source Field

VS.MM.UraUpdateReq.UraChange

Source Section

Paging, Cell and URA Update

MulCsMoCallAvgHoldTimeAHTAvg

Multi CS mobile originating call average holding time (Avg)

Data Source

RNC C-Node

Source Field

VS.MulCsMoCallAvgHoldTime.AHT.Avg

Source Section

FddCell

MulCsMoCallAvgHoldTimeAHTCum

Multi CS mobile originating call average holding time (Cum)

Data Source

RNC C-Node

Source Field

VS.MulCsMoCallAvgHoldTime.AHT.Cum

Source Section

FddCell

MulCsMoCallAvgHoldTimeAHTMax

Multi CS mobile originating call average holding time (Max)

Data Source

RNC C-Node

Source Field

VS.MulCsMoCallAvgHoldTime.AHT.Max

Source Section

FddCell

MulCsMoCallAvgHoldTimeAHTMin

Multi CS mobile originating call average holding time (Min)

Data Source

RNC C-Node

Source Field

VS.MulCsMoCallAvgHoldTime.AHT.Min

Source Section

FddCell

MulCsMoCallAvgHoldTimeAHTNbEvt

Multi CS mobile originating call average holding time (NbEvt)

© Copyright IBM Corp. 1999, 2009. All rights reserved.

Data Source

RNC C-Node

Source Field

VS.MulCsMoCallAvgHoldTime.AHT.NbEvt

Source Section

FddCell

MulCsMoRabCallAvgSetupTimeCSTAvg

Multi CS mobile originating RAB call average set up time (Avg)

Data Source

RNC C-Node

Source Field

VS.MulCsMoRabCallAvgSetupTime.CST.Avg

Source Section

FddCell

MulCsMoRabCallAvgSetupTimeCSTCum

Multi CS mobile originating RAB call average set up time (Cum)

Data Source

RNC C-Node

Source Field

VS.MulCsMoRabCallAvgSetupTime.CST.Cum

Source Section

FddCell

MulCsMoRabCallAvgSetupTimeCSTMax

Multi CS mobile originating RAB call average set up time (Max)

Data Source

RNC C-Node

Source Field

VS.MulCsMoRabCallAvgSetupTime.CST.Max

Source Section

FddCell

MulCsMoRabCallAvgSetupTimeCSTMin

Multi CS mobile originating RAB call average set up time (Min)

Data Source

RNC C-Node

Source Field

VS.MulCsMoRabCallAvgSetupTime.CST.Min

Source Section

FddCell

MulCsMoRabCallAvgSetupTimeCSTNbEvt

Multi CS mobile originating RAB call average set up time (NbEvt)

Data Source

RNC C-Node

Source Field

VS.MulCsMoRabCallAvgSetupTime.CST.NbEvt

Source Section

FddCell

MulCsMoState2FailureCnCallBarS2

number of Multi CS mobile originating failure at state 2. (CnCallBarS2)

Data Source

RNC C-Node

Source Field

VS.MulCsMoState2Failure.CnCallBarS2

© Copyright IBM Corp. 1999, 2009. All rights reserved.

Source Section

FddCell

MulCsMoState2FailureCnFwdCntErrS2

number of Multi CS mobile originating failure at state 2. (CnFwdCntErrS2)

Data Source

RNC C-Node

Source Field

VS.MulCsMoState2Failure.CnFwdCntErrS2

Source Section

FddCell

MulCsMoState2FailureCnImsiDetS2

number of Multi CS mobile originating failure at state 2. (CnImsiDetS2)

Data Source

RNC C-Node

Source Field

VS.MulCsMoState2Failure.CnImsiDetS2

Source Section

FddCell

MulCsMoState2FailureCnIncmpPrfS2

number of Multi CS mobile originating failure at state 2. (CnIncmpPrfS2)

Data Source

RNC C-Node

Source Field

VS.MulCsMoState2Failure.CnIncmpPrfS2

Source Section

FddCell

MulCsMoState2FailureCnIncomDialS2

number of Multi CS mobile originating failure at state 2. (CnIncomDialS2)

Data Source

RNC C-Node

Source Field

VS.MulCsMoState2Failure.CnIncomDialS2

Source Section

FddCell

MulCsMoState2FailureCnInvalSubS2

number of Multi CS mobile originating failure at state 2. (CnInvalSubS2)

Data Source

RNC C-Node

Source Field

VS.MulCsMoState2Failure.CnInvalSubS2

Source Section

FddCell

MulCsMoState2FailureCnIsupErrS2

number of Multi CS mobile originating failure at state 2. (CnIsupErrS2)

Data Source

RNC C-Node

Source Field

VS.MulCsMoState2Failure.CnIsupErrS2

Source Section

FddCell

MulCsMoState2FailureCnMobileErrS2

number of Multi CS mobile originating failure at state 2. (CnMobileErrS2)

© Copyright IBM Corp. 1999, 2009. All rights reserved.

Data Source

RNC C-Node

Source Field

VS.MulCsMoState2Failure.CnMobileErrS2

Source Section

FddCell

MulCsMoState2FailureCnOrgRelCspS2

number of Multi CS mobile originating failure at state 2. (CnOrgRelCspS2)

Data Source

RNC C-Node

Source Field

VS.MulCsMoState2Failure.CnOrgRelCspS2

Source Section

FddCell

MulCsMoState2FailureCnOrgRelMmS2

number of Multi CS mobile originating failure at state 2. (CnOrgRelMmS2)

Data Source

RNC C-Node

Source Field

VS.MulCsMoState2Failure.CnOrgRelMmS2

Source Section

FddCell

MulCsMoState2FailureCnPagNoRspS2

number of Multi CS mobile originating failure at state 2. (CnPagNoRspS2)

Data Source

RNC C-Node

Source Field

VS.MulCsMoState2Failure.CnPagNoRspS2

Source Section

FddCell

MulCsMoState2FailureCnSysFailS2

number of Multi CS mobile originating failure at state 2. (CnSysFailS2)

Data Source

RNC C-Node

Source Field

VS.MulCsMoState2Failure.CnSysFailS2

Source Section

FddCell

MulCsMoState2FailureCnTerEtcS2

number of Multi CS mobile originating failure at state 2. (CnTerEtcS2)

Data Source

RNC C-Node

Source Field

VS.MulCsMoState2Failure.CnTerEtcS2

Source Section

FddCell

MulCsMoState2FailureCnUserBusyS2

number of Multi CS mobile originating failure at state 2. (CnUserBusyS2)

Data Source

RNC C-Node

Source Field

VS.MulCsMoState2Failure.CnUserBusyS2

© Copyright IBM Corp. 1999, 2009. All rights reserved.

Source Section

FddCell

MulCsMoState2FailureCnWrongFtnS2

number of Multi CS mobile originating failure at state 2. (CnWrongFtnS2)

Data Source

RNC C-Node

Source Field

VS.MulCsMoState2Failure.CnWrongFtnS2

Source Section

FddCell

MulCsMoState2FailureCnWrongNoS2

number of Multi CS mobile originating failure at state 2. (CnWrongNoS2)

Data Source

RNC C-Node

Source Field

VS.MulCsMoState2Failure.CnWrongNoS2

Source Section

FddCell

MulCsMoState3FailureCnFwdCntErrS3

number of Multi CS mobile originating failure at state 3. (CnFwdCntErrS3)

Data Source

RNC C-Node

Source Field

VS.MulCsMoState3Failure.CnFwdCntErrS3

Source Section

FddCell

MulCsMoState3FailureCnIncmpPrfS3

number of Multi CS mobile originating failure at state 3. (CnIncmpPrfS3)

Data Source

RNC C-Node

Source Field

VS.MulCsMoState3Failure.CnIncmpPrfS3

Source Section

FddCell

MulCsMoState3FailureCnIsupErrS3

number of Multi CS mobile originating failure at state 3. (CnIsupErrS3)

Data Source

RNC C-Node

Source Field

VS.MulCsMoState3Failure.CnIsupErrS3

Source Section

FddCell

MulCsMoState3FailureCnMobileErrS3

number of Multi CS mobile originating failure at state 3. (CnMobileErrS3)

Data Source

RNC C-Node

Source Field

VS.MulCsMoState3Failure.CnMobileErrS3

Source Section

FddCell

MulCsMoState3FailureCnOrgRelCspS3

number of Multi CS mobile originating failure at state 3. (CnOrgRelCspS3)

© Copyright IBM Corp. 1999, 2009. All rights reserved.

Data Source

RNC C-Node

Source Field

VS.MulCsMoState3Failure.CnOrgRelCspS3

Source Section

FddCell

MulCsMoState3FailureCnWrongFtnS3

number of Multi CS mobile originating failure at state 3. (CnWrongFtnS3)

Data Source

RNC C-Node

Source Field

VS.MulCsMoState3Failure.CnWrongFtnS3

Source Section

FddCell

MulCsMoState4FailureCnFwdCntErrS4

number of Multi CS mobile originating failure at state 4. (CnFwdCntErrS4)

Data Source

RNC C-Node

Source Field

VS.MulCsMoState4Failure.CnFwdCntErrS4

Source Section

FddCell

MulCsMoState4FailureCnIsupErrS4

number of Multi CS mobile originating failure at state 4. (CnIsupErrS4)

Data Source

RNC C-Node

Source Field

VS.MulCsMoState4Failure.CnIsupErrS4

Source Section

FddCell

MulCsMoState4FailureCnMobileErrS4

number of Multi CS mobile originating failure at state 4. (CnMobileErrS4)

Data Source

RNC C-Node

Source Field

VS.MulCsMoState4Failure.CnMobileErrS4

Source Section

FddCell

MulCsMoState4FailureCnNoAnsS4

number of Multi CS mobile originating failure at state 4. (CnNoAnsS4)

Data Source

RNC C-Node

Source Field

VS.MulCsMoState4Failure.CnNoAnsS4

Source Section

FddCell

MulCsMoState4FailureCnOrgRelCspS4

number of Multi CS mobile originating failure at state 4. (CnOrgRelCspS4)

Data Source

RNC C-Node

Source Field

VS.MulCsMoState4Failure.CnOrgRelCspS4

© Copyright IBM Corp. 1999, 2009. All rights reserved.

Source Section

FddCell

MulCsMoState4FailureCnTerEtcS4

number of Multi CS mobile originating failure at state 4. (CnTerEtcS4)

Data Source

RNC C-Node

Source Field

VS.MulCsMoState4Failure.CnTerEtcS4

Source Section

FddCell

MulCsMoState4FailureCnWrongFtnS4

number of Multi CS mobile originating failure at state 4. (CnWrongFtnS4)

Data Source

RNC C-Node

Source Field

VS.MulCsMoState4Failure.CnWrongFtnS4

Source Section

FddCell

MulCsMtCallAvgHoldTimeAHTAvg

Multi CS mobile terminating call average holding time (Avg)

Data Source

RNC C-Node

Source Field

VS.MulCsMtCallAvgHoldTime.AHT.Avg

Source Section

FddCell

MulCsMtCallAvgHoldTimeAHTCum

Multi CS mobile terminating call average holding time (Cum)

Data Source

RNC C-Node

Source Field

VS.MulCsMtCallAvgHoldTime.AHT.Cum

Source Section

FddCell

MulCsMtCallAvgHoldTimeAHTMax

Multi CS mobile terminating call average holding time (Max)

Data Source

RNC C-Node

Source Field

VS.MulCsMtCallAvgHoldTime.AHT.Max

Source Section

FddCell

MulCsMtCallAvgHoldTimeAHTMin

Multi CS mobile terminating call average holding time (Min)

Data Source

RNC C-Node

Source Field

VS.MulCsMtCallAvgHoldTime.AHT.Min

Source Section

FddCell

MulCsMtCallAvgHoldTimeAHTNbEvt

Multi CS mobile terminating call average holding time (NbEvt)

© Copyright IBM Corp. 1999, 2009. All rights reserved.

Data Source

RNC C-Node

Source Field

VS.MulCsMtCallAvgHoldTime.AHT.NbEvt

Source Section

FddCell

MulCsMtRabCallAvgSetupTimeCSTAvg

Multi CS mobile terminating RAB call average set up time (Avg)

Data Source

RNC C-Node

Source Field

VS.MulCsMtRabCallAvgSetupTime.CST.Avg

Source Section

FddCell

MulCsMtRabCallAvgSetupTimeCSTCum

Multi CS mobile terminating RAB call average set up time (Cum)

Data Source

RNC C-Node

Source Field

VS.MulCsMtRabCallAvgSetupTime.CST.Cum

Source Section

FddCell

MulCsMtRabCallAvgSetupTimeCSTMax

Multi CS mobile terminating RAB call average set up time (Max)

Data Source

RNC C-Node

Source Field

VS.MulCsMtRabCallAvgSetupTime.CST.Max

Source Section

FddCell

MulCsMtRabCallAvgSetupTimeCSTMin

Multi CS mobile terminating RAB call average set up time (Min)

Data Source

RNC C-Node

Source Field

VS.MulCsMtRabCallAvgSetupTime.CST.Min

Source Section

FddCell

MulCsMtRabCallAvgSetupTimeCSTNbEvt

Multi CS mobile terminating RAB call average set up time (NbEvt)

Data Source

RNC C-Node

Source Field

VS.MulCsMtRabCallAvgSetupTime.CST.NbEvt

Source Section

FddCell

MulCsMtState2FailureCnInvalSubS2

number of Multi CS mobile terminating failure at state 2. (CnInvalSubS2)

Data Source

RNC C-Node

Source Field

VS.MulCsMtState2Failure.CnInvalSubS2

© Copyright IBM Corp. 1999, 2009. All rights reserved.

Source Section

FddCell

MulCsMtState2FailureCnIsupErrS2

number of Multi CS mobile terminating failure at state 2. (CnIsupErrS2)

Data Source

RNC C-Node

Source Field

VS.MulCsMtState2Failure.CnIsupErrS2

Source Section

FddCell

MulCsMtState2FailureCnMobileErrS2

number of Multi CS mobile terminating failure at state 2. (CnMobileErrS2)

Data Source

RNC C-Node

Source Field

VS.MulCsMtState2Failure.CnMobileErrS2

Source Section

FddCell

MulCsMtState2FailureCnOrgRelCspS2

number of Multi CS mobile terminating failure at state 2. (CnOrgRelCspS2)

Data Source

RNC C-Node

Source Field

VS.MulCsMtState2Failure.CnOrgRelCspS2

Source Section

FddCell

MulCsMtState2FailureCnOrgRelMmS2

number of Multi CS mobile terminating failure at state 2. (CnOrgRelMmS2)

Data Source

RNC C-Node

Source Field

VS.MulCsMtState2Failure.CnOrgRelMmS2

Source Section

FddCell

MulCsMtState2FailureCnTerEtcS2

number of Multi CS mobile terminating failure at state 2. (CnTerEtcS2)

Data Source

RNC C-Node

Source Field

VS.MulCsMtState2Failure.CnTerEtcS2

Source Section

FddCell

MulCsMtState3FailureCnFwdCntErrS3

number of Multi CS mobile terminating failure at state 3. (CnFwdCntErrS3)

Data Source

RNC C-Node

Source Field

VS.MulCsMtState3Failure.CnFwdCntErrS3

Source Section

FddCell

MulCsMtState3FailureCnIsupErrS3

number of Multi CS mobile terminating failure at state 3. (CnIsupErrS3)

© Copyright IBM Corp. 1999, 2009. All rights reserved.

Data Source

RNC C-Node

Source Field

VS.MulCsMtState3Failure.CnIsupErrS3

Source Section

FddCell

MulCsMtState3FailureCnMobileErrS3

number of Multi CS mobile terminating failure at state 3. (CnMobileErrS3)

Data Source

RNC C-Node

Source Field

VS.MulCsMtState3Failure.CnMobileErrS3

Source Section

FddCell

MulCsMtState3FailureCnOrgRelCspS3

number of Multi CS mobile terminating failure at state 3. (CnOrgRelCspS3)

Data Source

RNC C-Node

Source Field

VS.MulCsMtState3Failure.CnOrgRelCspS3

Source Section

FddCell

MulCsMtState4FailureCnFwdCntErrS4

number of Multi CS mobile terminating failure at state 4. (CnFwdCntErrS4)

Data Source

RNC C-Node

Source Field

VS.MulCsMtState4Failure.CnFwdCntErrS4

Source Section

FddCell

MulCsMtState4FailureCnIsupErrS4

number of Multi CS mobile terminating failure at state 4. (CnIsupErrS4)

Data Source

RNC C-Node

Source Field

VS.MulCsMtState4Failure.CnIsupErrS4

Source Section

FddCell

MulCsMtState4FailureCnMobileErrS4

number of Multi CS mobile terminating failure at state 4. (CnMobileErrS4)

Data Source

RNC C-Node

Source Field

VS.MulCsMtState4Failure.CnMobileErrS4

Source Section

FddCell

MulCsMtState4FailureCnNoAnsS4

number of Multi CS mobile terminating failure at state 4. (CnNoAnsS4)

Data Source

RNC C-Node

Source Field

VS.MulCsMtState4Failure.CnNoAnsS4

© Copyright IBM Corp. 1999, 2009. All rights reserved.

Source Section

FddCell

MulCsMtState4FailureCnOrgRelCspS4

number of Multi CS mobile terminating failure at state 4. (CnOrgRelCspS4)

Data Source

RNC C-Node

Source Field

VS.MulCsMtState4Failure.CnOrgRelCspS4

Source Section

FddCell

MulCsMtState4FailureCnTerEtcS4

number of Multi CS mobile terminating failure at state 4. (CnTerEtcS4)

Data Source

RNC C-Node

Source Field

VS.MulCsMtState4Failure.CnTerEtcS4

Source Section

FddCell

MulPsMoCallAvgHoldTimeAHTAvg

Multi PS mobile originating call average holding time (Avg)

Data Source

RNC C-Node

Source Field

VS.MulPsMoCallAvgHoldTime.AHT.Avg

Source Section

FddCell

MulPsMoCallAvgHoldTimeAHTCum

Multi PS mobile originating call average holding time (Cum)

Data Source

RNC C-Node

Source Field

VS.MulPsMoCallAvgHoldTime.AHT.Cum

Source Section

FddCell

MulPsMoCallAvgHoldTimeAHTMax

Multi PS mobile originating call average holding time (Max)

Data Source

RNC C-Node

Source Field

VS.MulPsMoCallAvgHoldTime.AHT.Max

Source Section

FddCell

MulPsMoCallAvgHoldTimeAHTMin

Multi PS mobile originating call average holding time (Min)

Data Source

RNC C-Node

Source Field

VS.MulPsMoCallAvgHoldTime.AHT.Min

Source Section

FddCell

MulPsMoCallAvgHoldTimeAHTNbEvt

Multi PS mobile originating call average holding time (NbEvt)

© Copyright IBM Corp. 1999, 2009. All rights reserved.

Data Source

RNC C-Node

Source Field

VS.MulPsMoCallAvgHoldTime.AHT.NbEvt

Source Section

FddCell

MulPsMoCallAvgHoldTimePresAHTAvg

Multi PS mobile originating call average holding time (Avg)

Data Source

RNC C-Node

Source Field

VS.MulPsMoCallAvgHoldTime.PresAHT.Avg

Source Section

FddCell

MulPsMoCallAvgHoldTimePresAHTCum

Multi PS mobile originating call average holding time (Cum)

Data Source

RNC C-Node

Source Field

VS.MulPsMoCallAvgHoldTime.PresAHT.Cum

Source Section

FddCell

MulPsMoCallAvgHoldTimePresAHTMax

Multi PS mobile originating call average holding time (Max)

Data Source

RNC C-Node

Source Field

VS.MulPsMoCallAvgHoldTime.PresAHT.Max

Source Section

FddCell

MulPsMoCallAvgHoldTimePresAHTMin

Multi PS mobile originating call average holding time (Min)

Data Source

RNC C-Node

Source Field

VS.MulPsMoCallAvgHoldTime.PresAHT.Min

Source Section

FddCell

MulPsMoCallAvgHoldTimePresAHTNbEvt

Multi PS mobile originating call average holding time (NbEvt)

Data Source

RNC C-Node

Source Field

VS.MulPsMoCallAvgHoldTime.PresAHT.NbEvt

Source Section

FddCell

MulPsMoRabCallAvgSetupTimeCSTAvg

Multi PS mobile originating RAB call average set up time (Avg)

Data Source

RNC C-Node

Source Field

VS.MulPsMoRabCallAvgSetupTime.CST.Avg

© Copyright IBM Corp. 1999, 2009. All rights reserved.

Source Section

FddCell

MulPsMoRabCallAvgSetupTimeCSTCum

Multi PS mobile originating RAB call average set up time (Cum)

Data Source

RNC C-Node

Source Field

VS.MulPsMoRabCallAvgSetupTime.CST.Cum

Source Section

FddCell

MulPsMoRabCallAvgSetupTimeCSTMax

Multi PS mobile originating RAB call average set up time (Max)

Data Source

RNC C-Node

Source Field

VS.MulPsMoRabCallAvgSetupTime.CST.Max

Source Section

FddCell

MulPsMoRabCallAvgSetupTimeCSTMin

Multi PS mobile originating RAB call average set up time (Min)

Data Source

RNC C-Node

Source Field

VS.MulPsMoRabCallAvgSetupTime.CST.Min

Source Section

FddCell

MulPsMoRabCallAvgSetupTimeCSTNbEvt

Multi PS mobile originating RAB call average set up time (NbEvt)

Data Source

RNC C-Node

Source Field

VS.MulPsMoRabCallAvgSetupTime.CST.NbEvt

Source Section

FddCell

MulPsMoRabCallAvgSetupTimePresCSTAvg

Multi PS mobile originating RAB call average set up time (Avg)

Data Source

RNC C-Node

Source Field

VS.MulPsMoRabCallAvgSetupTime.PresCST.Avg

Source Section

FddCell

MulPsMoRabCallAvgSetupTimePresCSTCum

Multi PS mobile originating RAB call average set up time (Cum)

Data Source

RNC C-Node

Source Field

VS.MulPsMoRabCallAvgSetupTime.PresCST.Cum

Source Section

FddCell

MulPsMoRabCallAvgSetupTimePresCSTMax

Multi PS mobile originating RAB call average set up time (Max)

© Copyright IBM Corp. 1999, 2009. All rights reserved.

Data Source

RNC C-Node

Source Field

VS.MulPsMoRabCallAvgSetupTime.PresCST.Max

Source Section

FddCell

MulPsMoRabCallAvgSetupTimePresCSTMin

Multi PS mobile originating RAB call average set up time (Min)

Data Source

RNC C-Node

Source Field

VS.MulPsMoRabCallAvgSetupTime.PresCST.Min

Source Section

FddCell

MulPsMoRabCallAvgSetupTimePresCSTNbEvt

Multi PS mobile originating RAB call average set up time (NbEvt)

Data Source

RNC C-Node

Source Field

VS.MulPsMoRabCallAvgSetupTime.PresCST.NbEvt

Source Section

FddCell

MulPsMoState2FailureCnActRejS2

number of Multi PS mobile originating failure at state 2. (CnActRejS2)

Data Source

RNC C-Node

Source Field

VS.MulPsMoState2Failure.CnActRejS2

Source Section

FddCell

MulPsMoState2FailureCnInvalSubS2

number of Multi PS mobile originating failure at state 2. (CnInvalSubS2)

Data Source

RNC C-Node

Source Field

VS.MulPsMoState2Failure.CnInvalSubS2

Source Section

FddCell

MulPsMoState2FailureCnMisApnS2

number of Multi PS mobile originating failure at state 2. (CnMisApnS2)

Data Source

RNC C-Node

Source Field

VS.MulPsMoState2Failure.CnMisApnS2

Source Section

FddCell

MulPsMoState2FailureCnNcmpMsgS2

number of Multi PS mobile originating failure at state 2. (CnNcmpMsgS2)

Data Source

RNC C-Node

Source Field

VS.MulPsMoState2Failure.CnNcmpMsgS2

© Copyright IBM Corp. 1999, 2009. All rights reserved.

Source Section

FddCell

MulPsMoState2FailureCnNsubRoS2

number of Multi PS mobile originating failure at state 2. (CnNsubRoS2)

Data Source

RNC C-Node

Source Field

VS.MulPsMoState2Failure.CnNsubRoS2

Source Section

FddCell

MulPsMoState2FailureCnNsupSoS2

number of Multi PS mobile originating failure at state 2. (CnNsupSoS2)

Data Source

RNC C-Node

Source Field

VS.MulPsMoState2Failure.CnNsupSoS2

Source Section

FddCell

MulPsMoState2FailureCnOperBarS2

number of Multi PS mobile originating failure at state 2. (CnOperBarS2)

Data Source

RNC C-Node

Source Field

VS.MulPsMoState2Failure.CnOperBarS2

Source Section

FddCell

MulPsMoState2FailureCnOrgRelMmS2

number of Multi PS mobile originating failure at state 2. (CnOrgRelMmS2)

Data Source

RNC C-Node

Source Field

VS.MulPsMoState2Failure.CnOrgRelMmS2

Source Section

FddCell

MulPsMoState2FailureCnProtoErrS2

number of Multi PS mobile originating failure at state 2. (CnProtoErrS2)

Data Source

RNC C-Node

Source Field

VS.MulPsMoState2Failure.CnProtoErrS2

Source Section

FddCell

MulPsMoState2FailureCnRejUnspeS2

number of Multi PS mobile originating failure at state 2. (CnRejUnspeS2)

Data Source

RNC C-Node

Source Field

VS.MulPsMoState2Failure.CnRejUnspeS2

Source Section

FddCell

MulPsMoState2FailureCnRoamRestS2

number of Multi PS mobile originating failure at state 2. (CnRoamRestS2)

© Copyright IBM Corp. 1999, 2009. All rights reserved.

Data Source

RNC C-Node

Source Field

VS.MulPsMoState2Failure.CnRoamRestS2

Source Section

FddCell

MulPsMoState2FailureCnSoTempS2

number of Multi PS mobile originating failure at state 2. (CnSoTempS2)

Data Source

RNC C-Node

Source Field

VS.MulPsMoState2Failure.CnSoTempS2

Source Section

FddCell

MulPsMoState2FailureCnUnkPdpS2

number of Multi PS mobile originating failure at state 2. (CnUnkPdpS2)

Data Source

RNC C-Node

Source Field

VS.MulPsMoState2Failure.CnUnkPdpS2

Source Section

FddCell

MulPsMoState3FailureCnRejUnspeS3

number of Multi PS mobile originating failure at state 3. (CnRejUnspeS3)

Data Source

RNC C-Node

Source Field

VS.MulPsMoState3Failure.CnRejUnspeS3

Source Section

FddCell

MulPsMoState4FailureCnRejUnspeS4

number of Multi PS mobile originating failure at state 4. (CnRejUnspeS4)

Data Source

RNC C-Node

Source Field

VS.MulPsMoState4Failure.CnRejUnspeS4

Source Section

FddCell

MulPsMtCallAvgHoldTimeAHTAvg

Multi PS mobile terminating call average holding time (Avg)

Data Source

RNC C-Node

Source Field

VS.MulPsMtCallAvgHoldTime.AHT.Avg

Source Section

FddCell

MulPsMtCallAvgHoldTimeAHTCum

Multi PS mobile terminating call average holding time (Cum)

Data Source

RNC C-Node

Source Field

VS.MulPsMtCallAvgHoldTime.AHT.Cum

© Copyright IBM Corp. 1999, 2009. All rights reserved.

Source Section

FddCell

MulPsMtCallAvgHoldTimeAHTMax

Multi PS mobile terminating call average holding time (Max)

Data Source

RNC C-Node

Source Field

VS.MulPsMtCallAvgHoldTime.AHT.Max

Source Section

FddCell

MulPsMtCallAvgHoldTimeAHTMin

Multi PS mobile terminating call average holding time (Min)

Data Source

RNC C-Node

Source Field

VS.MulPsMtCallAvgHoldTime.AHT.Min

Source Section

FddCell

MulPsMtCallAvgHoldTimeAHTNbEvt

Multi PS mobile terminating call average holding time (NbEvt)

Data Source

RNC C-Node

Source Field

VS.MulPsMtCallAvgHoldTime.AHT.NbEvt

Source Section

FddCell

MulPsMtCallAvgHoldTimePresAHTAvg

Multi PS mobile terminating call average holding time (Avg)

Data Source

RNC C-Node

Source Field

VS.MulPsMtCallAvgHoldTime.PresAHT.Avg

Source Section

FddCell

MulPsMtCallAvgHoldTimePresAHTCum

Multi PS mobile terminating call average holding time (Cum)

Data Source

RNC C-Node

Source Field

VS.MulPsMtCallAvgHoldTime.PresAHT.Cum

Source Section

FddCell

MulPsMtCallAvgHoldTimePresAHTMax

Multi PS mobile terminating call average holding time (Max)

Data Source

RNC C-Node

Source Field

VS.MulPsMtCallAvgHoldTime.PresAHT.Max

Source Section

FddCell

MulPsMtCallAvgHoldTimePresAHTMin

Multi PS mobile terminating call average holding time (Min)

© Copyright IBM Corp. 1999, 2009. All rights reserved.

Data Source

RNC C-Node

Source Field

VS.MulPsMtCallAvgHoldTime.PresAHT.Min

Source Section

FddCell

MulPsMtCallAvgHoldTimePresAHTNbEvt

Multi PS mobile terminating call average holding time (NbEvt)

Data Source

RNC C-Node

Source Field

VS.MulPsMtCallAvgHoldTime.PresAHT.NbEvt

Source Section

FddCell

MulPsMtRabCallAvgSetupTimeCSTAvg

Multi PS mobile terminating RAB call average set up time (Avg)

Data Source

RNC C-Node

Source Field

VS.MulPsMtRabCallAvgSetupTime.CST.Avg

Source Section

FddCell

MulPsMtRabCallAvgSetupTimeCSTCum

Multi PS mobile terminating RAB call average set up time (Cum)

Data Source

RNC C-Node

Source Field

VS.MulPsMtRabCallAvgSetupTime.CST.Cum

Source Section

FddCell

MulPsMtRabCallAvgSetupTimeCSTMax

Multi PS mobile terminating RAB call average set up time (Max)

Data Source

RNC C-Node

Source Field

VS.MulPsMtRabCallAvgSetupTime.CST.Max

Source Section

FddCell

MulPsMtRabCallAvgSetupTimeCSTMin

Multi PS mobile terminating RAB call average set up time (Min)

Data Source

RNC C-Node

Source Field

VS.MulPsMtRabCallAvgSetupTime.CST.Min

Source Section

FddCell

MulPsMtRabCallAvgSetupTimeCSTNbEvt

Multi PS mobile terminating RAB call average set up time (NbEvt)

Data Source

RNC C-Node

Source Field

VS.MulPsMtRabCallAvgSetupTime.CST.NbEvt

© Copyright IBM Corp. 1999, 2009. All rights reserved.

Source Section

FddCell

MulPsMtRabCallAvgSetupTimePresCSTAvg

Multi PS mobile terminating RAB call average set up time (Avg)

Data Source

RNC C-Node

Source Field

VS.MulPsMtRabCallAvgSetupTime.PresCST.Avg

Source Section

FddCell

MulPsMtRabCallAvgSetupTimePresCSTCum

Multi PS mobile terminating RAB call average set up time (Cum)

Data Source

RNC C-Node

Source Field

VS.MulPsMtRabCallAvgSetupTime.PresCST.Cum

Source Section

FddCell

MulPsMtRabCallAvgSetupTimePresCSTMax

Multi PS mobile terminating RAB call average set up time (Max)

Data Source

RNC C-Node

Source Field

VS.MulPsMtRabCallAvgSetupTime.PresCST.Max

Source Section

FddCell

MulPsMtRabCallAvgSetupTimePresCSTMin

Multi PS mobile terminating RAB call average set up time (Min)

Data Source

RNC C-Node

Source Field

VS.MulPsMtRabCallAvgSetupTime.PresCST.Min

Source Section

FddCell

MulPsMtRabCallAvgSetupTimePresCSTNbEvt

Multi PS mobile terminating RAB call average set up time (NbEvt)

Data Source

RNC C-Node

Source Field

VS.MulPsMtRabCallAvgSetupTime.PresCST.NbEvt

Source Section

FddCell

MulPsMtState2FailureCnActRejS2

number of Multi PS mobile terminating failure at state 2. (CnActRejS2)

Data Source

RNC C-Node

Source Field

VS.MulPsMtState2Failure.CnActRejS2

Source Section

FddCell

MulPsMtState2FailureCnInvalSubS2

number of Multi PS mobile terminating failure at state 2. (CnInvalSubS2)

© Copyright IBM Corp. 1999, 2009. All rights reserved.

Data Source

RNC C-Node

Source Field

VS.MulPsMtState2Failure.CnInvalSubS2

Source Section

FddCell

MulPsMtState2FailureCnMisApnS2

number of Multi PS mobile terminating failure at state 2. (CnMisApnS2)

Data Source

RNC C-Node

Source Field

VS.MulPsMtState2Failure.CnMisApnS2

Source Section

FddCell

MulPsMtState2FailureCnNcmpMsgS2

number of Multi PS mobile terminating failure at state 2. (CnNcmpMsgS2)

Data Source

RNC C-Node

Source Field

VS.MulPsMtState2Failure.CnNcmpMsgS2

Source Section

FddCell

MulPsMtState2FailureCnNsubRoS2

number of Multi PS mobile terminating failure at state 2. (CnNsubRoS2)

Data Source

RNC C-Node

Source Field

VS.MulPsMtState2Failure.CnNsubRoS2

Source Section

FddCell

MulPsMtState2FailureCnNsupSoS2

number of Multi PS mobile terminating failure at state 2. (CnNsupSoS2)

Data Source

RNC C-Node

Source Field

VS.MulPsMtState2Failure.CnNsupSoS2

Source Section

FddCell

MulPsMtState2FailureCnOrgRelMmS2

number of Multi PS mobile terminating failure at state 2. (CnOrgRelMmS2)

Data Source

RNC C-Node

Source Field

VS.MulPsMtState2Failure.CnOrgRelMmS2

Source Section

FddCell

MulPsMtState2FailureCnProtoErrS2

number of Multi PS mobile terminating failure at state 2. (CnProtoErrS2)

Data Source

RNC C-Node

Source Field

VS.MulPsMtState2Failure.CnProtoErrS2

© Copyright IBM Corp. 1999, 2009. All rights reserved.

Source Section

FddCell

MulPsMtState2FailureCnRejUnspeS2

number of Multi PS mobile terminating failure at state 2. (CnRejUnspeS2)

Data Source

RNC C-Node

Source Field

VS.MulPsMtState2Failure.CnRejUnspeS2

Source Section

FddCell

MulPsMtState2FailureCnRoamRestS2

number of Multi PS mobile terminating failure at state 2. (CnRoamRestS2)

Data Source

RNC C-Node

Source Field

VS.MulPsMtState2Failure.CnRoamRestS2

Source Section

FddCell

MulPsMtState2FailureCnSoTempS2

number of Multi PS mobile terminating failure at state 2. (CnSoTempS2)

Data Source

RNC C-Node

Source Field

VS.MulPsMtState2Failure.CnSoTempS2

Source Section

FddCell

MulPsMtState2FailureCnUnkPdpS2

number of Multi PS mobile terminating failure at state 2. (CnUnkPdpS2)

Data Source

RNC C-Node

Source Field

VS.MulPsMtState2Failure.CnUnkPdpS2

Source Section

FddCell

MulPsMtState3FailureCnRejUnspeS3

number of Multi PS mobile terminating failure at state 3. (CnRejUnspeS3)

Data Source

RNC C-Node

Source Field

VS.MulPsMtState3Failure.CnRejUnspeS3

Source Section

FddCell

MulPsMtState4FailureCnRejUnspeS4

number of Multi PS mobile terminating failure at state 4. (CnRejUnspeS4)

Data Source

RNC C-Node

Source Field

VS.MulPsMtState4Failure.CnRejUnspeS4

Source Section

FddCell

NbrCellUpdateRejectsAbortedByANewerCellUpdate

Number of rejected Cell Updates (AbortedByANewerCellUpdate)

© Copyright IBM Corp. 1999, 2009. All rights reserved.

Data Source

RNC C-Node

Source Field

VS.NbrCellUpdateRejects.AbortedByANewerCellUpdate

Source Section

FddCell

NbrCellUpdateRejectsFachCacFailure

Number of rejected Cell Updates (FachCacFailure)

Data Source

RNC C-Node

Source Field

VS.NbrCellUpdateRejects.FachCacFailure

Source Section

FddCell

NbrCellUpdateRejectsIncorrectMessage

Number of rejected Cell Updates (IncorrectMessage)

Data Source

RNC C-Node

Source Field

VS.NbrCellUpdateRejects.IncorrectMessage

Source Section

FddCell

NbrCellUpdateRejectsOther

Number of rejected Cell Updates (Other)

Data Source

RNC C-Node

Source Field

VS.NbrCellUpdateRejects.Other

Source Section

FddCell

NbrCellUpdateRejectsUnknownURNTI

Number of rejected Cell Updates (UnknownURNTI)

Data Source

RNC C-Node

Source Field

VS.NbrCellUpdateRejects.UnknownURNTI

Source Section

FddCell

NbrCellUpdatesCellReselection

Number of cell update messages received (CellReselection)

Data Source

RNC C-Node

Source Field

VS.NbrCellUpdates.CellReselection

Source Section

FddCell

NbrCellUpdatesPagingResponse

Number of cell update messages received (PagingResponse)

Data Source

RNC C-Node

Source Field

VS.NbrCellUpdates.PagingResponse

© Copyright IBM Corp. 1999, 2009. All rights reserved.

Source Section

FddCell

NbrCellUpdatesPeriodicCellUpdate

Number of cell update messages received (PeriodicCellUpdate)

Data Source

RNC C-Node

Source Field

VS.NbrCellUpdates.PeriodicCellUpdate

Source Section

FddCell

NbrCellUpdatesRadioLinkFailure

Number of cell update messages received (RadioLinkFailure)

Data Source

RNC C-Node

Source Field

VS.NbrCellUpdates.RadioLinkFailure

Source Section

FddCell

NbrCellUpdatesReenteredServiceArea

Number of cell update messages received (ReenteredServiceArea)

Data Source

RNC C-Node

Source Field

VS.NbrCellUpdates.ReenteredServiceArea

Source Section

FddCell

NbrCellUpdatesRlcUnrecoverableError

Number of cell update messages received (RlcUnrecoverableError)

Data Source

RNC C-Node

Source Field

VS.NbrCellUpdates.RlcUnrecoverableError

Source Section

FddCell

NbrCellUpdatesUplinkDataTransmission

Number of cell update messages received (UplinkDataTransmission)

Data Source

RNC C-Node

Source Field

VS.NbrCellUpdates.UplinkDataTransmission

Source Section

FddCell

NbrUraUpdatesChangeUra

Number of URA Updates received (ChangeUra)

Data Source

RNC C-Node

Source Field

VS.NbrUraUpdates.ChangeUra

Source Section

FddCell

NbrUraUpdatesPeriodicUraUpdate

Number of URA Updates received (PeriodicUraUpdate)

© Copyright IBM Corp. 1999, 2009. All rights reserved.

Data Source

RNC C-Node

Source Field

VS.NbrUraUpdates.PeriodicUraUpdate

Source Section

FddCell

NbrUraUpdatesRejFachCacFailure

Number of URA Updates rejected (FachCacFailure)

Data Source

RNC C-Node

Source Field

VS.NbrUraUpdatesRej.FachCacFailure

Source Section

FddCell

NbrUraUpdatesRejIncorrectMessage

Number of URA Updates rejected (IncorrectMessage)

Data Source

RNC C-Node

Source Field

VS.NbrUraUpdatesRej.IncorrectMessage

Source Section

FddCell

NbrUraUpdatesRejOther

Number of URA Updates rejected (Other)

Data Source

RNC C-Node

Source Field

VS.NbrUraUpdatesRej.Other

Source Section

FddCell

NbrUraUpdatesRejUnknownURNTI

Number of URA Updates rejected (UnknownURNTI)

Data Source

RNC C-Node

Source Field

VS.NbrUraUpdatesRej.UnknownURNTI

Source Section

FddCell

NumActRABMax_CSD

Retired fr 3.0.6.0.0 - Maximum Number of Active RABs for Service Type CSD

Data Source

RNC

Source Field

NumActRABMax.CSD

Source Section

Maximum Number of Active RABs

NumActRABMax_CSV12

Retired fr 3.0.6.0.0 - Maximum number of Active RABs for Service Type CSV

Data Source

RNC

Source Field

NumActRABMax.CSV12

© Copyright IBM Corp. 1999, 2009. All rights reserved.

Source Section

Maximum Number of Active RABs

NumActRABMax_PS

Retired fr 3.0.6.0.0 - Maximum Number of Active RABs for Service Type PS

Data Source

RNC

Source Field

NumActRABMax.PS

Source Section

Maximum Number of Active RABs

NumActRABMax_PS_DCH

Retired fr 3.0.6.0.0 - Maximum Number of Active RABs for Service Type PS mapped to DCH

Data Source

RNC

Source Field

NumActRABMax.PS.DCH

Source Section

Maximum Number of Active RABs

NumActRABMax_PS_HSDPA

Retired fr 3.0.6.0.0 - Maximum Number of Active RABs for Service Type PS mapped to HSDPA

Data Source

RNC

Source Field

NumActRABMax.PS.HSDPA

Source Section

Maximum Number of Active RABs

NumActRABMean_Bgrd_DCH

Mean number of PS RABs in Cell_DCH with QoS class Background mapped on DCH

Data Source

RNC

Source Field

NumActRABMean.Bgrd.DCH

Source Section

Mean number of active RABs

NumActRABMean_Bgrd_DCH_sum

Mean number of PS RABs in Cell_DCH with QoS class Background mapped on DCH. This peg provides Sum aggregation for the NumActRABMean.Bgrd.DCH measurement

Data Source

RNC

Source Field

NumActRABMean.Bgrd.DCH

Source Section

Mean number of active RABs

NumActRABMean_Bgrd_HSDSCH

Mean number of PS RABs in Cell_DCH with QoS class Background mapped on HS-DSCH

Data Source

RNC

Source Field

NumActRABMean.Bgrd.HSDSCH

© Copyright IBM Corp. 1999, 2009. All rights reserved.

Source Section

Mean number of active RABs

NumActRABMean_Bgrd_HSDSCH_sum

Mean number of PS RABs in Cell_DCH with QoS class Background mapped on HS-DSCH. This peg provides Sum aggregation for the NumActRABMean.Bgrd.HSDSCH measurement

Data Source

RNC

Source Field

NumActRABMean.Bgrd.HSDSCH

Source Section

Mean number of active RABs

NumActRABMean_Intact_DCH

Mean number of PS RABs in Cell_DCH with QoS class Interactive mapped on DCH

Data Source

RNC

Source Field

NumActRABMean.Intact.DCH

Source Section

Mean number of active RABs

NumActRABMean_Intact_DCH_sum

Mean number of PS RABs in Cell_DCH with QoS class Interactive mapped on DCH. This peg provides Sum aggregation for the NumActRABMean.Intact.DCH measurement

Data Source

RNC

Source Field

NumActRABMean.Intact.DCH

Source Section

Mean number of active RABs

NumActRABMean_Intact_HSDSCH

Mean number of PS RABs in Cell_DCH with QoS class Interactive mapped on HS-DSCH

Data Source

RNC

Source Field

NumActRABMean.Intact.HSDSCH

Source Section

Mean number of active RABs

NumActRABMean_Intact_HSDSCH_sum

Mean number of PS RABs in Cell_DCH with QoS class Interactive mapped on HS-DSCH. This peg provides Sum aggregation for the NumActRABMean.Intact.HSDSCH measurement

Data Source

RNC

Source Field

NumActRABMean.Intact.HSDSCH

Source Section

Mean number of active RABs

NumActRABMean_PS128DL

Mean Number of Active RABs for DL Data Rate of 128 kbps

Data Source

RNC

Source Field

NumActRABMean.PS128DL

© Copyright IBM Corp. 1999, 2009. All rights reserved.

Source Section

Mean number of active RABs

NumActRABMean_PS128DL_sum

Mean Number of Active RABs for DL Data Rate of 128 kbps. This peg provides Sum aggregation for the NumActRABMean.PS128DL measurement

Data Source

RNC

Source Field

NumActRABMean.PS128DL

Source Section

Mean number of active RABs

NumActRABMean_PS128UL

Mean Number of Active RABs for UL Data Rate of 128 kbps

Data Source

RNC

Source Field

NumActRABMean.PS128UL

Source Section

Mean number of active RABs

NumActRABMean_PS128UL_sum

Mean Number of Active RABs for UL Data Rate of 128 kbps. This peg provides Sum aggregation for the NumActRABMean.PS128UL measurement

Data Source

RNC

Source Field

NumActRABMean.PS128UL

Source Section

Mean number of active RABs

NumActRABMean_PS32DL

Mean Number of Active RABs for DL Data Rate of 32 kbps

Data Source

RNC

Source Field

NumActRABMean.PS32DL

Source Section

Mean number of active RABs

NumActRABMean_PS32DL_sum

Mean Number of Active RABs for DL Data Rate of 32 kbps. This peg provides Sum aggregation for the NumActRABMean.PS32DL measurement

Data Source

RNC

Source Field

NumActRABMean.PS32DL

Source Section

Mean number of active RABs

NumActRABMean_PS32UL

Mean Number of Active RABs for UL Data Rate of 32 kbps

Data Source

RNC

Source Field

NumActRABMean.PS32UL

© Copyright IBM Corp. 1999, 2009. All rights reserved.

Source Section

Mean number of active RABs

NumActRABMean_PS32UL_sum

Mean Number of Active RABs for UL Data Rate of 32 kbps. This peg provides Sum aggregation for the NumActRABMean.PS32UL measurement

Data Source

RNC

Source Field

NumActRABMean.PS32UL

Source Section

Mean number of active RABs

NumActRABMean_PS384DL

Mean Number of Active RABs for DL Data Rate of 384 kbps

Data Source

RNC

Source Field

NumActRABMean.PS384DL

Source Section

Mean number of active RABs

NumActRABMean_PS384DL_sum

Mean Number of Active RABs for DL Data Rate of 384 kbps. This peg provides Sum aggregation for the NumActRABMean.PS384DL measurement

Data Source

RNC

Source Field

NumActRABMean.PS384DL

Source Section

Mean number of active RABs

NumActRABMean_PS64DL

Mean Number of Active RABs for DL Data Rate of 64 kbps

Data Source

RNC

Source Field

NumActRABMean.PS64DL

Source Section

Mean number of active RABs

NumActRABMean_PS64DL_sum

Mean Number of Active RABs for DL Data Rate of 64 kbps. This peg provides Sum aggregation for the NumActRABMean.PS64DL measurement

Data Source

RNC

Source Field

NumActRABMean.PS64DL

Source Section

Mean number of active RABs

NumActRABMean_PS64UL

Mean Number of Active RABs for UL Data Rate of 64 kbps

Data Source

RNC

Source Field

NumActRABMean.PS64UL

© Copyright IBM Corp. 1999, 2009. All rights reserved.

Source Section

Mean number of active RABs

NumActRABMean_PS64UL_sum

Mean Number of Active RABs for UL Data Rate of 64 kbps. This peg provides Sum aggregation for the NumActRABMean.PS64UL measurement

Data Source

RNC

Source Field

NumActRABMean.PS64UL

Source Section

Mean number of active RABs

NumActRABMean_Strm_DCH

Mean number of PS RABs in Cell_DCH with QoS Class Streaming mapped on DCH

Data Source

RNC

Source Field

NumActRABMean.Strm.DCH

Source Section

Mean number of active RABs

NumActRABMean_Strm_DCH_sum

Mean number of PS RABs in Cell_DCH with QoS Class Streaming mapped on DCH. This peg provides Sum aggregation for the NumActRABMean.Strm.DCH measurement

Data Source

RNC

Source Field

NumActRABMean.Strm.DCH

Source Section

Mean number of active RABs

NumActRABs_CSD_Accumulated

Accumulated number of active RABs for Service Type CS Data in RAB-seconds. It is derived from "NumActRABMean.CSD * Data_interval_for_RNC_data".

Data Source

RNC

Source Field

NumActRABMean.CSD * 1.0 * Data_interval_for_RNC_data

Source Section

Mean number of active RABs

NumActRABs_CSV12_Accumulated

Accumulated number of active RABs for Service Type CS Voice in RAB-seconds. It is derived from "NumActRABMean.CSV12 * Data_interval_for_RNC_data".

Data Source

RNC

Source Field

NumActRABMean.CSV12 * 1.0 * Data_interval_for_RNC_data

Source Section

Mean number of active RABs

NumAttServCellChangeHSDSCH_T_ServHCC_exp

Attempted Serving HS-DSCH Cell Changes due to reason timer for Serving HS-DSCH Cell Changes has expired.

Data Source

RNC

Source Field

NumAttServCellChangeHSDSCH.T_ServHCC_exp

© Copyright IBM Corp. 1999, 2009. All rights reserved.

Source Section

PMs in support of HS-DSCH Cell Change

NumAttServCellChangeHSDSCH_transport_channel_reconf_failure

Attempted Serving HS-DSCH Cell Changes due to Transport Channel Reconfiguration failures

Data Source

RNC

Source Field

NumAttServCellChangeHSDSCH.transport_channel_reconf_failure

Source Section

PMs in support of HS-DSCH Cell Change

NumFailRelocPrepUMTS_GSM_DirRetry_sum

Retired fr 3.0.6.0.0 - Total Number of Failed relocation preparations for inter-system directed retry

Data Source

RNC

Source Field

NumFailRelocPrepUMTS-GSM_DirRetry.sum

Source Section

Inter-System Directed Retry

NumFailServCellChangeHSDSCH

Failed Serving HS-DSCH Cell Changes

Data Source

RNC

Source Field

NumFailServCellChangeHSDSCH

Source Section

PMs in support of HS-DSCH Cell Change

NumHighPerfUsersAvg

Indicates an average number of high performance users (PDU size is 656 bits) based on time over collection period. (Avg)

Data Source

RNC C-Node

Source Field

VS.NumHighPerfUsers.Avg

Source Section

FddCell

NumHighPerfUsersCum

Indicates an average number of high performance users (PDU size is 656 bits) based on time over collection period. (Cum)

Data Source

RNC C-Node

Source Field

VS.NumHighPerfUsers.Cum

Source Section

FddCell

NumHighPerfUsersMax

Indicates an average number of high performance users (PDU size is 656 bits) based on time over collection period. (Max)

Data Source

RNC C-Node

Source Field

VS.NumHighPerfUsers.Max

© Copyright IBM Corp. 1999, 2009. All rights reserved.

Source Section

FddCell

NumHighPerfUsersMin

Indicates an average number of high performance users (PDU size is 656 bits) based on time over collection period. (Min)

Data Source

RNC C-Node

Source Field

VS.NumHighPerfUsers.Min

Source Section

FddCell

NumHighPerfUsersNbEvt

Indicates an average number of high performance users (PDU size is 656 bits) based on time over collection period. (NbEvt)

Data Source

RNC C-Node

Source Field

VS.NumHighPerfUsers.NbEvt

Source Section

FddCell

NumHsPdschCodesAvg

For a particular cell, this is number of HS-PDSCH codes as required in message PHYSICAL SHARED CHANNEL RECONFIGURATION for this feature (see TS 25.433, Section 9.2.2.18F). This counter offers the mean of measuring average, minimum and maximum values for the observed quantity NumberOfHsPdschCodes (Avg)

Data Source

RNC C-Node

Source Field

VS.NumHsPdschCodes.Avg

Source Section

FddCell

NumHsPdschCodesCum

For a particular cell, this is number of HS-PDSCH codes as required in message PHYSICAL SHARED CHANNEL RECONFIGURATION for this feature (see TS 25.433, Section 9.2.2.18F). This counter offers the mean of measuring average, minimum and maximum values for the observed quantity NumberOfHsPdschCodes (Cum)

Data Source

RNC C-Node

Source Field

VS.NumHsPdschCodes.Cum

Source Section

FddCell

NumHsPdschCodesMax

For a particular cell, this is number of HS-PDSCH codes as required in message PHYSICAL SHARED CHANNEL RECONFIGURATION for this feature (see TS 25.433, Section 9.2.2.18F). This counter offers the mean of measuring average, minimum and maximum values for the observed quantity NumberOfHsPdschCodes (Max)

Data Source

RNC C-Node

Source Field

VS.NumHsPdschCodes.Max

Source Section

FddCell

NumHsPdschCodesMin

For a particular cell, this is number of HS-PDSCH codes as required in message PHYSICAL SHARED CHANNEL RECONFIGURATION for this feature (see TS 25.433, Section

© Copyright IBM Corp. 1999, 2009. All rights reserved.

9.2.2.18F). This counter offers the mean of measuring average, minimum and maximum values for the observed quantity NumberOfHsPdschCodes (Min)

Data Source

RNC C-Node

Source Field

VS.NumHsPdschCodes.Min

Source Section

FddCell

NumHsPdschCodesNbEvt

For a particular cell, this is number of HS-PDSCH codes as required in message PHYSICAL SHARED CHANNEL RECONFIGURATION for this feature (see TS 25.433, Section 9.2.2.18F). This counter offers the mean of measuring average, minimum and maximum values for the observed quantity NumberOfHsPdschCodes (NbEvt)

Data Source

RNC C-Node

Source Field

VS.NumHsPdschCodes.NbEvt

Source Section

FddCell

NumIntraRNCSHOFail_NoReply

Retired fr 3.0.6.0.0 - Number of Failed Intra-RNC Soft/Softer Handover Attempts due to Failure cause 'No reply' for any service

Data Source

RNC

Source Field

NumIntraRNCSHOFail.NoReply

Source Section

Intra RNC Soft/Softer Handover

NumIntraRNCSHOFail_UERej

Retired fr 3.0.6.0.0 - Number of Failed Intra-RNC Soft/Softer Handover Attempts due to Failure cause 'UE Reject' for any service

Data Source

RNC

Source Field

NumIntraRNCSHOFail.UERej

Source Section

Intra RNC Soft/Softer Handover

NumRBReconfAtt_DCH_Dec

Number of Data Rate Reconfiguration Attempts made by the RNC in Cell DCH to decrease the data rate

Data Source

RNC

Source Field

NumRBReconfAtt.DCH_Dec

Source Section

Radio Resource Management - RB Reconfiguration Counters

NumRBReconfFail_DCH_Fail

Number of data rate reconfigurations attempts in Cell DCH, which have failed

Data Source

RNC

Source Field

NumRBReconfFail.DCH_Fail

Source Section

Radio Resource Management - RB Reconfiguration Counters

© Copyright IBM Corp. 1999, 2009. All rights reserved.

NumRBReconfFail_FACH_DCH

Number of Failed RB Reconfiguration Attempts: Cell FACH to Cell DCH

Data Source

RNC

Source Field

NumRBReconfFail.FACH_DCH

Source Section

Radio Resource Management - RB Reconfiguration Counters

NumRRCConnFail_CallRedirectGSM_Emergency

The number of attempted emergency calls redirected to the GSM network during an RRC Connection Setup

Data Source

RNC

Source Field

NumRRCConnFail.CallRedirectGSM_Emergency

Source Section

Inter-System Directed Retry

OutGoInterFreqHoAttNoRsrcAvailCacFailure

Number of hard handovers attempted from this cell to another inter-frequency cell located either in the same RNC or in a neighbouring RNC (a Iur link is setup towards the inter-frequency cell). (NoRsrcAvailCacFailure)

Data Source

RNC C-Node

Source Field

VS.OutGoInterFreqHoAtt.NoRsrcAvailCacFailure

Source Section

FddCell

OutGoInterFreqHoAttRescue

Number of hard handovers attempted from this cell to another inter-frequency cell located either in the same RNC or in a neighbouring RNC (a Iur link is setup towards the inter-frequency cell). (Rescue)

Data Source

RNC C-Node

Source Field

VS.OutGoInterFreqHoAtt.Rescue

Source Section

FddCell

OutGoInterFreqHoAttService

Number of hard handovers attempted from this cell to another inter-frequency cell located either in the same RNC or in a neighbouring RNC (a Iur link is setup towards the inter-frequency cell). (Service)

Data Source

RNC C-Node

Source Field

VS.OutGoInterFreqHoAtt.Service

Source Section

FddCell

OutGoInterFreqHoSucNoRsrcAvailCacFailure

Number of successful hard handovers from this cell located on the serving RNC to another inter-frequency cell located either in the same RNC or in a neighbouring RNC (a Iur link is setup towards the inter-frequency cell). (NoRsrcAvailCacFailure)

Data Source

RNC C-Node

Source Field

VS.OutGoInterFreqHoSuc.NoRsrcAvailCacFailure

© Copyright IBM Corp. 1999, 2009. All rights reserved.

Source Section

FddCell

OutGoInterFreqHoSucRescue

Number of successful hard handovers from this cell located on the serving RNC to another inter-frequency cell located either in the same RNC or in a neighbouring RNC (a Iur link is setup towards the inter-frequency cell). (Rescue)

Data Source

RNC C-Node

Source Field

VS.OutGoInterFreqHoSuc.Rescue

Source Section

FddCell

OutGoInterFreqHoSucService

Number of successful hard handovers from this cell located on the serving RNC to another inter-frequency cell located either in the same RNC or in a neighbouring RNC (a Iur link is setup towards the inter-frequency cell). (Service)

Data Source

RNC C-Node

Source Field

VS.OutGoInterFreqHoSuc.Service

Source Section

FddCell

PagingCancelledRecords

Number of paging records that are cancelled after having been scheduled but before being sent. (PagingCancelledRecords)

Data Source

RNC C-Node

Source Field

VS.PagingCancelledRecords

Source Section

FddCell

PagingDelayedRecords

Number of paging records that are delayed before being sent (PagingDelayedRecords)

Data Source

RNC C-Node

Source Field

VS.PagingDelayedRecords

Source Section

FddCell

PagingMessagesSentOnPcch

Number of paging messages sent on the PCCH of the cell (PagingMessagesSentOnPcch)

Data Source

RNC C-Node

Source Field

VS.PagingMessagesSentOnPcch

Source Section

FddCell

PagingRecordsSentOnPcchCsTerminatingBackgroundCall

Number of paging records sent on the PCCH of the cell (TerminatingBackgroundCall)

Data Source

RNC C-Node

Source Field

VS.PagingRecordsSentOnPcchCs.TerminatingBackgroundCall

© Copyright IBM Corp. 1999, 2009. All rights reserved.

Source Section

FddCell

PagingRecordsSentOnPcchCsTerminatingCauseUnknown

Number of paging records sent on the PCCH of the cell (TerminatingCauseUnknown)

Data Source

RNC C-Node

Source Field

VS.PagingRecordsSentOnPcchCs.TerminatingCauseUnknown

Source Section

FddCell

PagingRecordsSentOnPcchCsTerminatingConversationalCall

Number of paging records sent on the PCCH of the cell (TerminatingConversationalCall)

Data Source

RNC C-Node

Source Field

VS.PagingRecordsSentOnPcchCs.TerminatingConversationalCall

Source Section

FddCell

PagingRecordsSentOnPcchCsTerminatingHighPrioritySignalling

Number of paging records sent on the PCCH of the cell (TerminatingHighPrioritySignalling)

Data Source

RNC C-Node

Source Field

VS.PagingRecordsSentOnPcchCs.TerminatingHighPrioritySignalling

Source Section

FddCell

PagingRecordsSentOnPcchCsTerminatingInteractiveCall

Number of paging records sent on the PCCH of the cell (TerminatingInteractiveCall)

Data Source

RNC C-Node

Source Field

VS.PagingRecordsSentOnPcchCs.TerminatingInteractiveCall

Source Section

FddCell

PagingRecordsSentOnPcchCsTerminatingLowPrioritySignalling

Number of paging records sent on the PCCH of the cell (TerminatingLowPrioritySignalling)

Data Source

RNC C-Node

Source Field

VS.PagingRecordsSentOnPcchCs.TerminatingLowPrioritySignalling

Source Section

FddCell

PagingRecordsSentOnPcchCsTerminatingStreamingCall

Number of paging records sent on the PCCH of the cell (TerminatingStreamingCall)

Data Source

RNC C-Node

Source Field

VS.PagingRecordsSentOnPcchCs.TerminatingStreamingCall

Source Section

FddCell

PagingRecordsSentOnPcchPsTerminatingBackgroundCall

Number of paging records sent on the PCCH of the cell (TerminatingBackgroundCall)

© Copyright IBM Corp. 1999, 2009. All rights reserved.

Data Source

RNC C-Node

Source Field

VS.PagingRecordsSentOnPcchPs.TerminatingBackgroundCall

Source Section

FddCell

PagingRecordsSentOnPcchPsTerminatingCauseUnknown

Number of paging records sent on the PCCH of the cell (TerminatingCauseUnknown)

Data Source

RNC C-Node

Source Field

VS.PagingRecordsSentOnPcchPs.TerminatingCauseUnknown

Source Section

FddCell

PagingRecordsSentOnPcchPsTerminatingConversationalCall

Number of paging records sent on the PCCH of the cell (TerminatingConversationalCall)

Data Source

RNC C-Node

Source Field

VS.PagingRecordsSentOnPcchPs.TerminatingConversationalCall

Source Section

FddCell

PagingRecordsSentOnPcchPsTerminatingHighPrioritySignalling

Number of paging records sent on the PCCH of the cell (TerminatingHighPrioritySignalling)

Data Source

RNC C-Node

Source Field

VS.PagingRecordsSentOnPcchPs.TerminatingHighPrioritySignalling

Source Section

FddCell

PagingRecordsSentOnPcchPsTerminatingInteractiveCall

Number of paging records sent on the PCCH of the cell (TerminatingInteractiveCall)

Data Source

RNC C-Node

Source Field

VS.PagingRecordsSentOnPcchPs.TerminatingInteractiveCall

Source Section

FddCell

PagingRecordsSentOnPcchPsTerminatingLowPrioritySignalling

Number of paging records sent on the PCCH of the cell (TerminatingLowPrioritySignalling)

Data Source

RNC C-Node

Source Field

VS.PagingRecordsSentOnPcchPs.TerminatingLowPrioritySignalling

Source Section

FddCell

PagingRecordsSentOnPcchPsTerminatingStreamingCall

Number of paging records sent on the PCCH of the cell (TerminatingStreamingCall)

Data Source

RNC C-Node

Source Field

VS.PagingRecordsSentOnPcchPs.TerminatingStreamingCall

© Copyright IBM Corp. 1999, 2009. All rights reserved.

Source Section

FddCell

PagingRecordsType2SentCsTerminatingBackgroundCall

Number of type 2 paging records sent to a Ue with a given reference cell per paging cause for Core Network CS (TerminatingBackgroundCall)

Data Source

RNC C-Node

Source Field

VS.PagingRecordsType2SentCs.TerminatingBackgroundCall

Source Section

FddCell

PagingRecordsType2SentCsTerminatingCauseUnknown

Number of type 2 paging records sent to a Ue with a given reference cell per paging cause for Core Network CS (TerminatingCauseUnknown)

Data Source

RNC C-Node

Source Field

VS.PagingRecordsType2SentCs.TerminatingCauseUnknown

Source Section

FddCell

PagingRecordsType2SentCsTerminatingConversationalCall

Number of type 2 paging records sent to a Ue with a given reference cell per paging cause for Core Network CS (TerminatingConversationalCall)

Data Source

RNC C-Node

Source Field

VS.PagingRecordsType2SentCs.TerminatingConversationalCall

Source Section

FddCell

PagingRecordsType2SentCsTerminatingHighPrioritySignalling

Number of type 2 paging records sent to a Ue with a given reference cell per paging cause for Core Network CS (TerminatingHighPrioritySignalling)

Data Source

RNC C-Node

Source Field

VS.PagingRecordsType2SentCs.TerminatingHighPrioritySignalling

Source Section

FddCell

PagingRecordsType2SentCsTerminatingInteractiveCall

Number of type 2 paging records sent to a Ue with a given reference cell per paging cause for Core Network CS (TerminatingInteractiveCall)

Data Source

RNC C-Node

Source Field

VS.PagingRecordsType2SentCs.TerminatingInteractiveCall

Source Section

FddCell

PagingRecordsType2SentCsTerminatingLowPrioritySignalling

Number of type 2 paging records sent to a Ue with a given reference cell per paging cause for Core Network CS (TerminatingLowPrioritySignalling)

Data Source

RNC C-Node

Source Field

VS.PagingRecordsType2SentCs.TerminatingLowPrioritySignalling

© Copyright IBM Corp. 1999, 2009. All rights reserved.

Source Section

FddCell

PagingRecordsType2SentCsTerminatingStreamingCall

Number of type 2 paging records sent to a Ue with a given reference cell per paging cause for Core Network CS (TerminatingStreamingCall)

Data Source

RNC C-Node

Source Field

VS.PagingRecordsType2SentCs.TerminatingStreamingCall

Source Section

FddCell

PagingRecordsType2SentPsTerminatingBackgroundCall

Number of type 2 paging records sent to a Ue with a given reference cell per paging cause for Core Network PS (TerminatingBackgroundCall)

Data Source

RNC C-Node

Source Field

VS.PagingRecordsType2SentPs.TerminatingBackgroundCall

Source Section

FddCell

PagingRecordsType2SentPsTerminatingCauseUnknown

Number of type 2 paging records sent to a Ue with a given reference cell per paging cause for Core Network PS (TerminatingCauseUnknown)

Data Source

RNC C-Node

Source Field

VS.PagingRecordsType2SentPs.TerminatingCauseUnknown

Source Section

FddCell

PagingRecordsType2SentPsTerminatingConversationalCall

Number of type 2 paging records sent to a Ue with a given reference cell per paging cause for Core Network PS (TerminatingConversationalCall)

Data Source

RNC C-Node

Source Field

VS.PagingRecordsType2SentPs.TerminatingConversationalCall

Source Section

FddCell

PagingRecordsType2SentPsTerminatingHighPrioritySignalling

Number of type 2 paging records sent to a Ue with a given reference cell per paging cause for Core Network PS (TerminatingHighPrioritySignalling)

Data Source

RNC C-Node

Source Field

VS.PagingRecordsType2SentPs.TerminatingHighPrioritySignalling

Source Section

FddCell

PagingRecordsType2SentPsTerminatingInteractiveCall

Number of type 2 paging records sent to a Ue with a given reference cell per paging cause for Core Network PS (TerminatingInteractiveCall)

Data Source

RNC C-Node

Source Field

VS.PagingRecordsType2SentPs.TerminatingInteractiveCall

© Copyright IBM Corp. 1999, 2009. All rights reserved.

Source Section

FddCell

PagingRecordsType2SentPsTerminatingLowPrioritySignalling

Number of type 2 paging records sent to a Ue with a given reference cell per paging cause for Core Network PS (TerminatingLowPrioritySignalling)

Data Source

RNC C-Node

Source Field

VS.PagingRecordsType2SentPs.TerminatingLowPrioritySignalling

Source Section

FddCell

PagingRecordsType2SentPsTerminatingStreamingCall

Number of type 2 paging records sent to a Ue with a given reference cell per paging cause for Core Network PS (TerminatingStreamingCall)

Data Source

RNC C-Node

Source Field

VS.PagingRecordsType2SentPs.TerminatingStreamingCall

Source Section

FddCell

PagingRecordsUnscheduledCsTerminatingBackgroundCall

Number of paging records that have invalid format or cannot be scheduled because the paging occasion is full. (TerminatingBackgroundCall)

Data Source

RNC C-Node

Source Field

VS.PagingRecordsUnscheduledCs.TerminatingBackgroundCall

Source Section

FddCell

PagingRecordsUnscheduledCsTerminatingCauseUnknown

Number of paging records that have invalid format or cannot be scheduled because the paging occasion is full. (TerminatingCauseUnknown)

Data Source

RNC C-Node

Source Field

VS.PagingRecordsUnscheduledCs.TerminatingCauseUnknown

Source Section

FddCell

PagingRecordsUnscheduledCsTerminatingConversationalCall

Number of paging records that have invalid format or cannot be scheduled because the paging occasion is full. (TerminatingConversationalCall)

Data Source

RNC C-Node

Source Field

VS.PagingRecordsUnscheduledCs.TerminatingConversationalCall

Source Section

FddCell

PagingRecordsUnscheduledCsTerminatingHighPrioritySignalling

Number of paging records that have invalid format or cannot be scheduled because the paging occasion is full. (TerminatingHighPrioritySignalling)

Data Source

RNC C-Node

Source Field

VS.PagingRecordsUnscheduledCs.TerminatingHighPrioritySignalling

© Copyright IBM Corp. 1999, 2009. All rights reserved.

Source Section

FddCell

PagingRecordsUnscheduledCsTerminatingInteractiveCall

Number of paging records that have invalid format or cannot be scheduled because the paging occasion is full. (TerminatingInteractiveCall)

Data Source

RNC C-Node

Source Field

VS.PagingRecordsUnscheduledCs.TerminatingInteractiveCall

Source Section

FddCell

PagingRecordsUnscheduledCsTerminatingLowPrioritySignalling

Number of paging records that have invalid format or cannot be scheduled because the paging occasion is full. (TerminatingLowPrioritySignalling)

Data Source

RNC C-Node

Source Field

VS.PagingRecordsUnscheduledCs.TerminatingLowPrioritySignalling

Source Section

FddCell

PagingRecordsUnscheduledCsTerminatingStreamingCall

Number of paging records that have invalid format or cannot be scheduled because the paging occasion is full. (TerminatingStreamingCall)

Data Source

RNC C-Node

Source Field

VS.PagingRecordsUnscheduledCs.TerminatingStreamingCall

Source Section

FddCell

PagingRecordsUnscheduledPsTerminatingBackgroundCall

Number of paging records that have invalid format or cannot be scheduled because the paging occasion is full. (TerminatingBackgroundCall)

Data Source

RNC C-Node

Source Field

VS.PagingRecordsUnscheduledPs.TerminatingBackgroundCall

Source Section

FddCell

PagingRecordsUnscheduledPsTerminatingCauseUnknown

Number of paging records that have invalid format or cannot be scheduled because the paging occasion is full. (TerminatingCauseUnknown)

Data Source

RNC C-Node

Source Field

VS.PagingRecordsUnscheduledPs.TerminatingCauseUnknown

Source Section

FddCell

PagingRecordsUnscheduledPsTerminatingConversationalCall

Number of paging records that have invalid format or cannot be scheduled because the paging occasion is full. (TerminatingConversationalCall)

Data Source

RNC C-Node

Source Field

VS.PagingRecordsUnscheduledPs.TerminatingConversationalCall

© Copyright IBM Corp. 1999, 2009. All rights reserved.

Source Section

FddCell

PagingRecordsUnscheduledPsTerminatingHighPrioritySignalling

Number of paging records that have invalid format or cannot be scheduled because the paging occasion is full. (TerminatingHighPrioritySignalling)

Data Source

RNC C-Node

Source Field

VS.PagingRecordsUnscheduledPs.TerminatingHighPrioritySignalling

Source Section

FddCell

PagingRecordsUnscheduledPsTerminatingInteractiveCall

Number of paging records that have invalid format or cannot be scheduled because the paging occasion is full. (TerminatingInteractiveCall)

Data Source

RNC C-Node

Source Field

VS.PagingRecordsUnscheduledPs.TerminatingInteractiveCall

Source Section

FddCell

PagingRecordsUnscheduledPsTerminatingLowPrioritySignalling

Number of paging records that have invalid format or cannot be scheduled because the paging occasion is full. (TerminatingLowPrioritySignalling)

Data Source

RNC C-Node

Source Field

VS.PagingRecordsUnscheduledPs.TerminatingLowPrioritySignalling

Source Section

FddCell

PagingRecordsUnscheduledPsTerminatingStreamingCall

Number of paging records that have invalid format or cannot be scheduled because the paging occasion is full. (TerminatingStreamingCall)

Data Source

RNC C-Node

Source Field

VS.PagingRecordsUnscheduledPs.TerminatingStreamingCall

Source Section

FddCell

PagingRejectedRequests

Number of paging requests that are rejected (PagingRejectedRequests)

Data Source

RNC C-Node

Source Field

VS.PagingRejectedRequests

Source Section

FddCell

PagingSleepyCellInactivity

Number of minutes since Paging activity was detected for this cell. (PagingSleepyCellInactivity)

Data Source

RNC C-Node

Source Field

VS.PagingSleepyCellInactivity

© Copyright IBM Corp. 1999, 2009. All rights reserved.

Source Section

FddCell

PercentFACHOccupancy

The percentage of the average FACH occupancy per granularity period

Data Source

RNC

Source Field

VS.PercentFACHOccupancy

Source Section

Common Control Channel

PhysSharChanReconfigFail_DCA

This counter provides the number of NBAP Physical Shared Channel Reconfiguration Failure for a Physical Shared Channel Reconfiguration Request triggered by Dynamic Code Allocation (DCA).

Data Source

RNC

Source Field

VS.PhysSharChanReconfigFail.DCA

Source Section

Dynamic Code Allocation

PhysSharChanReconfigReq_DCA

This counter provides the number of Physical Shared Channel Reconfiguration Requests triggered by Dynamic Code Allocation (DCA).

Data Source

RNC

Source Field

VS.PhysSharChanReconfigReq.DCA

Source Section

Dynamic Code Allocation

PreemptDchNbPerProcAlwaysOnUpsizeTwdCELLDCH

Number of times the DCH preemption is required per procedure (AlwaysOnUpsizeTwdCELLDCH)

Data Source

RNC C-Node

Source Field

VS.PreemptDchNbPerProc.AlwaysOnUpsizeTwdCELLDCH

Source Section

FddCell

PreemptDchNbPerProcInterFreqIntraRNCMob

Number of times the DCH preemption is required per procedure (InterFreqIntraRNCMob)

Data Source

RNC C-Node

Source Field

VS.PreemptDchNbPerProc.InterFreqIntraRNCMob

Source Section

FddCell

PreemptDchNbPerProcInterRATReloc

Number of times the DCH preemption is required per procedure (InterRATReloc)

Data Source

RNC C-Node

Source Field

VS.PreemptDchNbPerProc.InterRATReloc

© Copyright IBM Corp. 1999, 2009. All rights reserved.

Source Section

FddCell

PreemptDchNbPerProcIntraFreqIntraRNCMob

Number of times the DCH preemption is required per procedure (IntraFreqIntraRNCMob)

Data Source

RNC C-Node

Source Field

VS.PreemptDchNbPerProc.IntraFreqIntraRNCMob

Source Section

FddCell

PreemptDchNbPerProcIuRelCmd

Number of times the DCH preemption is required per procedure (IuRelCmd)

Data Source

RNC C-Node

Source Field

VS.PreemptDchNbPerProc.IuRelCmd

Source Section

FddCell

PreemptDchNbPerProcRabAssig

Number of times the DCH preemption is required per procedure (RabAssig)

Data Source

RNC C-Node

Source Field

VS.PreemptDchNbPerProc.RabAssig

Source Section

FddCell

PreemptDchNbPerProcRrcEstab

Number of times the DCH preemption is required per procedure (RrcEstab)

Data Source

RNC C-Node

Source Field

VS.PreemptDchNbPerProc.RrcEstab

Source Section

FddCell

PreemptDgdNbPerServTypeMbmsPsBkgndPtp

Number of times (per service type) a service is required to be downgraded by pre-emption (MbmsPsBkgndPtp)

Data Source

RNC C-Node

Source Field

VS.PreemptDgdNbPerServType.MbmsPsBkgndPtp

Source Section

FddCell

PreemptDgdNbPerServTypeMbmsPsStrmPtp

Number of times (per service type) a service is required to be downgraded by pre-emption (MbmsPsStrmPtp)

Data Source

RNC C-Node

Source Field

VS.PreemptDgdNbPerServType.MbmsPsStrmPtp

Source Section

FddCell

© Copyright IBM Corp. 1999, 2009. All rights reserved.

PreemptDgdNbPerServTypePsBkgnd

Number of times (per service type) a service is required to be downgraded by pre-emption (PsBkgnd)

Data Source

RNC C-Node

Source Field

VS.PreemptDgdNbPerServType.PsBkgnd

Source Section

FddCell

PreemptDgdNbPerServTypePsIntr

Number of times (per service type) a service is required to be downgraded by pre-emption (PsIntr)

Data Source

RNC C-Node

Source Field

VS.PreemptDgdNbPerServType.PsIntr

Source Section

FddCell

PreemptDgdNbPerServTypePsStrm

Number of times (per service type) a service is required to be downgraded by pre-emption (PsStrm)

Data Source

RNC C-Node

Source Field

VS.PreemptDgdNbPerServType.PsStrm

Source Section

FddCell

PreemptEdchNbPerProcAlwaysOnUpsizeTwdCELLDCH

Number of times the E-DCH preemption is required per procedure (AlwaysOnUpsizeTwdCELLDCH)

Data Source

RNC C-Node

Source Field

VS.PreemptEdchNbPerProc.AlwaysOnUpsizeTwdCELLDCH

Source Section

FddCell

PreemptEdchNbPerProcInterFreqIntraRNCMob

Number of times the E-DCH preemption is required per procedure (InterFreqIntraRNCMob)

Data Source

RNC C-Node

Source Field

VS.PreemptEdchNbPerProc.InterFreqIntraRNCMob

Source Section

FddCell

PreemptEdchNbPerProcInterRATReloc

Number of times the E-DCH preemption is required per procedure (InterRATReloc)

Data Source

RNC C-Node

Source Field

VS.PreemptEdchNbPerProc.InterRATReloc

Source Section

FddCell

© Copyright IBM Corp. 1999, 2009. All rights reserved.

PreemptEdchNbPerProcIntraFreqIntraRNCMob

Number of times the E-DCH preemption is required per procedure (IntraFreqIntraRNCMob)

Data Source

RNC C-Node

Source Field

VS.PreemptEdchNbPerProc.IntraFreqIntraRNCMob

Source Section

FddCell

PreemptEdchNbPerProcIuRelCmd

Number of times the E-DCH preemption is required per procedure (IuRelCmd)

Data Source

RNC C-Node

Source Field

VS.PreemptEdchNbPerProc.IuRelCmd

Source Section

FddCell

PreemptEdchNbPerProcRabAssig

Number of times the E-DCH preemption is required per procedure (RabAssig)

Data Source

RNC C-Node

Source Field

VS.PreemptEdchNbPerProc.RabAssig

Source Section

FddCell

PreemptEdchNbPerProcRrcEstab

Number of times the E-DCH preemption is required per procedure (RrcEstab)

Data Source

RNC C-Node

Source Field

VS.PreemptEdchNbPerProc.RrcEstab

Source Section

FddCell

PreemptHsDschNbPerProcAlwaysOnUpsizeTwdCELLDCH

Number of times the HS-DSCH preemption is required per procedure (AlwaysOnUpsizeTwdCELLDCH)

Data Source

RNC C-Node

Source Field

VS.PreemptHsDschNbPerProc.AlwaysOnUpsizeTwdCELLDCH

Source Section

FddCell

PreemptHsDschNbPerProcInterFreqIntraRNCMob

Number of times the HS-DSCH preemption is required per procedure (InterFreqIntraRNCMob)

Data Source

RNC C-Node

Source Field

VS.PreemptHsDschNbPerProc.InterFreqIntraRNCMob

Source Section

FddCell

PreemptHsDschNbPerProcInterRATReloc

Number of times the HS-DSCH preemption is required per procedure (InterRATReloc)

© Copyright IBM Corp. 1999, 2009. All rights reserved.

Data Source

RNC C-Node

Source Field

VS.PreemptHsDschNbPerProc.InterRATReloc

Source Section

FddCell

PreemptHsDschNbPerProcIntraFreqIntraRNCMob

Number of times the HS-DSCH preemption is required per procedure (IntraFreqIntraRNCMob)

Data Source

RNC C-Node

Source Field

VS.PreemptHsDschNbPerProc.IntraFreqIntraRNCMob

Source Section

FddCell

PreemptHsDschNbPerProcIuRelCmd

Number of times the HS-DSCH preemption is required per procedure (IuRelCmd)

Data Source

RNC C-Node

Source Field

VS.PreemptHsDschNbPerProc.IuRelCmd

Source Section

FddCell

PreemptHsDschNbPerProcRabAssig

Number of times the HS-DSCH preemption is required per procedure (RabAssig)

Data Source

RNC C-Node

Source Field

VS.PreemptHsDschNbPerProc.RabAssig

Source Section

FddCell

PreemptHsDschNbPerProcRrcEstab

Number of times the HS-DSCH preemption is required per procedure (RrcEstab)

Data Source

RNC C-Node

Source Field

VS.PreemptHsDschNbPerProc.RrcEstab

Source Section

FddCell

PreemptNbPerCacFailDLRadioRsrcNotAvail

Number of times (per CAC failure) the preemption resource deallocation procedure is required (DLRadioRsrcNotAvail)

Data Source

RNC C-Node

Source Field

VS.PreemptNbPerCacFail.DLRadioRsrcNotAvail

Source Section

FddCell

PreemptNbPerCacFailNodeBRsrcUnavail

Number of times (per CAC failure) the preemption resource deallocation procedure is required (NodeBRsrcUnavail)

Data Source

RNC C-Node

© Copyright IBM Corp. 1999, 2009. All rights reserved.

Source Field

VS.PreemptNbPerCacFail.NodeBRsrcUnavail

Source Section

FddCell

PreemptNbPerCacFailRNCDLCodeRsrcNotAvail

Number of times (per CAC failure) the preemption resource deallocation procedure is required (RNCDLCodeRsrcNotAvail)

Data Source

RNC C-Node

Source Field

VS.PreemptNbPerCacFail.RNCDLCodeRsrcNotAvail

Source Section

FddCell

PreemptNbPerCacFailRNCDLIubBwRsrcNotAvail

Number of times (per CAC failure) the preemption resource deallocation procedure is required (RNCDLIubBwRsrcNotAvail)

Data Source

RNC C-Node

Source Field

VS.PreemptNbPerCacFail.RNCDLIubBwRsrcNotAvail

Source Section

FddCell

PreemptNbPerCacFailRNCDLIubCidRsrcNotAvail

Number of times (per CAC failure) the preemption resource deallocation procedure is required (RNCDLIubCidRsrcNotAvail)

Data Source

RNC C-Node

Source Field

VS.PreemptNbPerCacFail.RNCDLIubCidRsrcNotAvail

Source Section

FddCell

PreemptNbPerCacFailRNCDLPowerRsrcNotAvail

Number of times (per CAC failure) the preemption resource deallocation procedure is required (RNCDLPowerRsrcNotAvail)

Data Source

RNC C-Node

Source Field

VS.PreemptNbPerCacFail.RNCDLPowerRsrcNotAvail

Source Section

FddCell

PreemptNbPerCacFailRNCIubBwRsrcUnavail

Number of times (per CAC failure) the preemption resource deallocation procedure is required (RNCIubBwRsrcUnavail)

Data Source

RNC C-Node

Source Field

VS.PreemptNbPerCacFail.RNCIubBwRsrcUnavail

Source Section

FddCell

PreemptNbPerCacFailRNCIubCidRsrcUnavail

Number of times (per CAC failure) the preemption resource deallocation procedure is required (RNCIubCidRsrcUnavail)

Data Source

RNC C-Node

© Copyright IBM Corp. 1999, 2009. All rights reserved.

Source Field

VS.PreemptNbPerCacFail.RNCIubCidRsrcUnavail

Source Section

FddCell

PreemptNbPerCacFailRNCULIubBwRsrcNotAvail

Number of times (per CAC failure) the preemption resource deallocation procedure is required (RNCULIubBwRsrcNotAvail)

Data Source

RNC C-Node

Source Field

VS.PreemptNbPerCacFail.RNCULIubBwRsrcNotAvail

Source Section

FddCell

PreemptNbPerCacFailRNCULIubCidRsrcNotAvail

Number of times (per CAC failure) the preemption resource deallocation procedure is required (RNCULIubCidRsrcNotAvail)

Data Source

RNC C-Node

Source Field

VS.PreemptNbPerCacFail.RNCULIubCidRsrcNotAvail

Source Section

FddCell

PreemptNbPerCacFailULRadioRsrcNotAvail

Number of times (per CAC failure) the preemption resource deallocation procedure is required (ULRadioRsrcNotAvail)

Data Source

RNC C-Node

Source Field

VS.PreemptNbPerCacFail.ULRadioRsrcNotAvail

Source Section

FddCell

PreemptNbTrgPerRrcEstabCauseEmergency

Number of times (per RRC Establishment Cause) the cause requires the pre-emption (Emergency)

Data Source

RNC C-Node

Source Field

VS.PreemptNbTrgPerRrcEstabCause.Emergency

Source Section

FddCell

PreemptNbTrgPerRrcEstabCauseMbmsPtpRbReq

Number of times (per RRC Establishment Cause) the cause requires the pre-emption (MbmsPtpRbReq)

Data Source

RNC C-Node

Source Field

VS.PreemptNbTrgPerRrcEstabCause.MbmsPtpRbReq

Source Section

FddCell

PreemptNbTrgPerRrcEstabCauseMbmsReception

Number of times (per RRC Establishment Cause) the cause requires the pre-emption (MbmsReception)

Data Source

RNC C-Node

© Copyright IBM Corp. 1999, 2009. All rights reserved.

Source Field

VS.PreemptNbTrgPerRrcEstabCause.MbmsReception

Source Section

FddCell

PreemptNbTrgPerRrcEstabCauseMoBgrdCall

Number of times (per RRC Establishment Cause) the cause requires the pre-emption (MoBgrdCall)

Data Source

RNC C-Node

Source Field

VS.PreemptNbTrgPerRrcEstabCause.MoBgrdCall

Source Section

FddCell

PreemptNbTrgPerRrcEstabCauseMoConvCall

Number of times (per RRC Establishment Cause) the cause requires the pre-emption (MoConvCall)

Data Source

RNC C-Node

Source Field

VS.PreemptNbTrgPerRrcEstabCause.MoConvCall

Source Section

FddCell

PreemptNbTrgPerRrcEstabCauseMoIntactCall

Number of times (per RRC Establishment Cause) the cause requires the pre-emption (MoIntactCall)

Data Source

RNC C-Node

Source Field

VS.PreemptNbTrgPerRrcEstabCause.MoIntactCall

Source Section

FddCell

PreemptNbTrgPerRrcEstabCauseMoStrmCall

Number of times (per RRC Establishment Cause) the cause requires the pre-emption (MoStrmCall)

Data Source

RNC C-Node

Source Field

VS.PreemptNbTrgPerRrcEstabCause.MoStrmCall

Source Section

FddCell

PreemptNbTrgPerRrcEstabCauseMtBgrdCall

Number of times (per RRC Establishment Cause) the cause requires the pre-emption (MtBgrdCall)

Data Source

RNC C-Node

Source Field

VS.PreemptNbTrgPerRrcEstabCause.MtBgrdCall

Source Section

FddCell

PreemptNbTrgPerRrcEstabCauseMtConvCall

Number of times (per RRC Establishment Cause) the cause requires the pre-emption (MtConvCall)

Data Source

RNC C-Node

© Copyright IBM Corp. 1999, 2009. All rights reserved.

Source Field

VS.PreemptNbTrgPerRrcEstabCause.MtConvCall

Source Section

FddCell

PreemptNbTrgPerRrcEstabCauseMtIntactCall

Number of times (per RRC Establishment Cause) the cause requires the pre-emption (MtIntactCall)

Data Source

RNC C-Node

Source Field

VS.PreemptNbTrgPerRrcEstabCause.MtIntactCall

Source Section

FddCell

PreemptNbTrgPerRrcEstabCauseMtStrmCall

Number of times (per RRC Establishment Cause) the cause requires the pre-emption (MtStrmCall)

Data Source

RNC C-Node

Source Field

VS.PreemptNbTrgPerRrcEstabCause.MtStrmCall

Source Section

FddCell

PreemptNbTrgPerRrcEstabCauseRegistration

Number of times (per RRC Establishment Cause) the cause requires the pre-emption (Registration)

Data Source

RNC C-Node

Source Field

VS.PreemptNbTrgPerRrcEstabCause.Registration

Source Section

FddCell

PreemptNbTrgPerServTypeCSStrm

Number of times (per service type) the service requires the pre-emption (CSStrm)

Data Source

RNC C-Node

Source Field

VS.PreemptNbTrgPerServType.CSStrm

Source Section

FddCell

PreemptNbTrgPerServTypeEmergency

Number of times (per service type) the service requires the pre-emption (Emergency)

Data Source

RNC C-Node

Source Field

VS.PreemptNbTrgPerServType.Emergency

Source Section

FddCell

PreemptNbTrgPerServTypeMbmsPsBkgndPtm

Number of times (per service type) the service requires the pre-emption (MbmsPsBkgndPtm)

Data Source

RNC C-Node

Source Field

VS.PreemptNbTrgPerServType.MbmsPsBkgndPtm

© Copyright IBM Corp. 1999, 2009. All rights reserved.

Source Section

FddCell

PreemptNbTrgPerServTypeMbmsPsBkgndPtp

Number of times (per service type) the service requires the pre-emption (MbmsPsBkgndPtp)

Data Source

RNC C-Node

Source Field

VS.PreemptNbTrgPerServType.MbmsPsBkgndPtp

Source Section

FddCell

PreemptNbTrgPerServTypeMbmsPsStrmPtm

Number of times (per service type) the service requires the pre-emption (MbmsPsStrmPtm)

Data Source

RNC C-Node

Source Field

VS.PreemptNbTrgPerServType.MbmsPsStrmPtm

Source Section

FddCell

PreemptNbTrgPerServTypeMbmsPsStrmPtp

Number of times (per service type) the service requires the pre-emption (MbmsPsStrmPtp)

Data Source

RNC C-Node

Source Field

VS.PreemptNbTrgPerServType.MbmsPsStrmPtp

Source Section

FddCell

PreemptNbTrgPerServTypePSBkgnd

Number of times (per service type) the service requires the pre-emption (PSBkgnd)

Data Source

RNC C-Node

Source Field

VS.PreemptNbTrgPerServType.PSBkgnd

Source Section

FddCell

PreemptNbTrgPerServTypePSIntr

Number of times (per service type) the service requires the pre-emption (PSIntr)

Data Source

RNC C-Node

Source Field

VS.PreemptNbTrgPerServType.PSIntr

Source Section

FddCell

PreemptNbTrgPerServTypePSIntrSig

Number of times (per service type) the service requires the pre-emption (PSIntrSig)

Data Source

RNC C-Node

Source Field

VS.PreemptNbTrgPerServType.PSIntrSig

Source Section

FddCell

PreemptNbTrgPerServTypePSStrm

Number of times (per service type) the service requires the pre-emption (PSStrm)

© Copyright IBM Corp. 1999, 2009. All rights reserved.

Data Source

RNC C-Node

Source Field

VS.PreemptNbTrgPerServType.PSStrm

Source Section

FddCell

PreemptNbTrgPerServTypeSpeech

Number of times (per service type) the service requires the pre-emption (Speech)

Data Source

RNC C-Node

Source Field

VS.PreemptNbTrgPerServType.Speech

Source Section

FddCell

PreemptNbTrgPerServTypeVideoTel

Number of times (per service type) the service requires the pre-emption (VideoTel)

Data Source

RNC C-Node

Source Field

VS.PreemptNbTrgPerServType.VideoTel

Source Section

FddCell

PreemptNbTrgPerServTypeVoiceOverIP

Number of times (per service type) the service requires the pre-emption (VoiceOverIP)

Data Source

RNC C-Node

Source Field

VS.PreemptNbTrgPerServType.VoiceOverIP

Source Section

FddCell

PreemptQueuedServNotServedCSStrm

Number of times a queued service is not served during a RAB assignment procedure. It concerns the queued services to set-up or to modify (CSStrm)

Data Source

RNC C-Node

Source Field

VS.PreemptQueuedServNotServed.CSStrm

Source Section

FddCell

PreemptQueuedServNotServedEmergency

Number of times a queued service is not served during a RAB assignment procedure. It concerns the queued services to set-up or to modify (Emergency)

Data Source

RNC C-Node

Source Field

VS.PreemptQueuedServNotServed.Emergency

Source Section

FddCell

PreemptQueuedServNotServedMbmsPsBkgndPtm

Number of times a queued service is not served during a RAB assignment procedure. It concerns the queued services to set-up or to modify (MbmsPsBkgndPtm)

Data Source

RNC C-Node

© Copyright IBM Corp. 1999, 2009. All rights reserved.

Source Field

VS.PreemptQueuedServNotServed.MbmsPsBkgndPtm

Source Section

FddCell

PreemptQueuedServNotServedMbmsPsBkgndPtp

Number of times a queued service is not served during a RAB assignment procedure. It concerns the queued services to set-up or to modify (MbmsPsBkgndPtp)

Data Source

RNC C-Node

Source Field

VS.PreemptQueuedServNotServed.MbmsPsBkgndPtp

Source Section

FddCell

PreemptQueuedServNotServedMbmsPsStrmPtm

Number of times a queued service is not served during a RAB assignment procedure. It concerns the queued services to set-up or to modify (MbmsPsStrmPtm)

Data Source

RNC C-Node

Source Field

VS.PreemptQueuedServNotServed.MbmsPsStrmPtm

Source Section

FddCell

PreemptQueuedServNotServedMbmsPsStrmPtp

Number of times a queued service is not served during a RAB assignment procedure. It concerns the queued services to set-up or to modify (MbmsPsStrmPtp)

Data Source

RNC C-Node

Source Field

VS.PreemptQueuedServNotServed.MbmsPsStrmPtp

Source Section

FddCell

PreemptQueuedServNotServedPSBkgnd

Number of times a queued service is not served during a RAB assignment procedure. It concerns the queued services to set-up or to modify (PSBkgnd)

Data Source

RNC C-Node

Source Field

VS.PreemptQueuedServNotServed.PSBkgnd

Source Section

FddCell

PreemptQueuedServNotServedPSIntr

Number of times a queued service is not served during a RAB assignment procedure. It concerns the queued services to set-up or to modify (PSIntr)

Data Source

RNC C-Node

Source Field

VS.PreemptQueuedServNotServed.PSIntr

Source Section

FddCell

PreemptQueuedServNotServedPSIntrSig

Number of times a queued service is not served during a RAB assignment procedure. It concerns the queued services to set-up or to modify (PSIntrSig)

Data Source

RNC C-Node

© Copyright IBM Corp. 1999, 2009. All rights reserved.

Source Field

VS.PreemptQueuedServNotServed.PSIntrSig

Source Section

FddCell

PreemptQueuedServNotServedPSStrm

Number of times a queued service is not served during a RAB assignment procedure. It concerns the queued services to set-up or to modify (PSStrm)

Data Source

RNC C-Node

Source Field

VS.PreemptQueuedServNotServed.PSStrm

Source Section

FddCell

PreemptQueuedServNotServedSpeech

Number of times a queued service is not served during a RAB assignment procedure. It concerns the queued services to set-up or to modify (Speech)

Data Source

RNC C-Node

Source Field

VS.PreemptQueuedServNotServed.Speech

Source Section

FddCell

PreemptQueuedServNotServedVideoTel

Number of times a queued service is not served during a RAB assignment procedure. It concerns the queued services to set-up or to modify (VideoTel)

Data Source

RNC C-Node

Source Field

VS.PreemptQueuedServNotServed.VideoTel

Source Section

FddCell

PreemptQueuedServNotServedVoiceOverIP

Number of times a queued service is not served during a RAB assignment procedure. It concerns the queued services to set-up or to modify (VoiceOverIP)

Data Source

RNC C-Node

Source Field

VS.PreemptQueuedServNotServed.VoiceOverIP

Source Section

FddCell

PreemptQueuedServServedCSStrm

Number of times a queued service is served during a RAB assignment procedure. It concerns the queued services to set-up or to modify (CSStrm)

Data Source

RNC C-Node

Source Field

VS.PreemptQueuedServServed.CSStrm

Source Section

FddCell

PreemptQueuedServServedEmergency

Number of times a queued service is served during a RAB assignment procedure. It concerns the queued services to set-up or to modify (Emergency)

Data Source

RNC C-Node

© Copyright IBM Corp. 1999, 2009. All rights reserved.

Source Field

VS.PreemptQueuedServServed.Emergency

Source Section

FddCell

PreemptQueuedServServedMbmsPsBkgndPtm

Number of times a queued service is served during a RAB assignment procedure. It concerns the queued services to set-up or to modify (MbmsPsBkgndPtm)

Data Source

RNC C-Node

Source Field

VS.PreemptQueuedServServed.MbmsPsBkgndPtm

Source Section

FddCell

PreemptQueuedServServedMbmsPsBkgndPtp

Number of times a queued service is served during a RAB assignment procedure. It concerns the queued services to set-up or to modify (MbmsPsBkgndPtp)

Data Source

RNC C-Node

Source Field

VS.PreemptQueuedServServed.MbmsPsBkgndPtp

Source Section

FddCell

PreemptQueuedServServedMbmsPsStrmPtm

Number of times a queued service is served during a RAB assignment procedure. It concerns the queued services to set-up or to modify (MbmsPsStrmPtm)

Data Source

RNC C-Node

Source Field

VS.PreemptQueuedServServed.MbmsPsStrmPtm

Source Section

FddCell

PreemptQueuedServServedMbmsPsStrmPtp

Number of times a queued service is served during a RAB assignment procedure. It concerns the queued services to set-up or to modify (MbmsPsStrmPtp)

Data Source

RNC C-Node

Source Field

VS.PreemptQueuedServServed.MbmsPsStrmPtp

Source Section

FddCell

PreemptQueuedServServedPSBkgnd

Number of times a queued service is served during a RAB assignment procedure. It concerns the queued services to set-up or to modify (PSBkgnd)

Data Source

RNC C-Node

Source Field

VS.PreemptQueuedServServed.PSBkgnd

Source Section

FddCell

PreemptQueuedServServedPSIntr

Number of times a queued service is served during a RAB assignment procedure. It concerns the queued services to set-up or to modify (PSIntr)

Data Source

RNC C-Node

© Copyright IBM Corp. 1999, 2009. All rights reserved.

Source Field

VS.PreemptQueuedServServed.PSIntr

Source Section

FddCell

PreemptQueuedServServedPSIntrSig

Number of times a queued service is served during a RAB assignment procedure. It concerns the queued services to set-up or to modify (PSIntrSig)

Data Source

RNC C-Node

Source Field

VS.PreemptQueuedServServed.PSIntrSig

Source Section

FddCell

PreemptQueuedServServedPSStrm

Number of times a queued service is served during a RAB assignment procedure. It concerns the queued services to set-up or to modify (PSStrm)

Data Source

RNC C-Node

Source Field

VS.PreemptQueuedServServed.PSStrm

Source Section

FddCell

PreemptQueuedServServedSpeech

Number of times a queued service is served during a RAB assignment procedure. It concerns the queued services to set-up or to modify (Speech)

Data Source

RNC C-Node

Source Field

VS.PreemptQueuedServServed.Speech

Source Section

FddCell

PreemptQueuedServServedVideoTel

Number of times a queued service is served during a RAB assignment procedure. It concerns the queued services to set-up or to modify (VideoTel)

Data Source

RNC C-Node

Source Field

VS.PreemptQueuedServServed.VideoTel

Source Section

FddCell

PreemptQueuedServServedVoiceOverIP

Number of times a queued service is served during a RAB assignment procedure. It concerns the queued services to set-up or to modify (VoiceOverIP)

Data Source

RNC C-Node

Source Field

VS.PreemptQueuedServServed.VoiceOverIP

Source Section

FddCell

PreemptRelNbPerServTypeCSStrm

Number of times (per service type) a service is required to be released by pre-emption (CSStrm)

Data Source

RNC C-Node

© Copyright IBM Corp. 1999, 2009. All rights reserved.

Source Field

VS.PreemptRelNbPerServType.CSStrm

Source Section

FddCell

PreemptRelNbPerServTypeMbmsPsBkgndPtm

Number of times (per service type) a service is required to be released by pre-emption (MbmsPsBkgndPtm)

Data Source

RNC C-Node

Source Field

VS.PreemptRelNbPerServType.MbmsPsBkgndPtm

Source Section

FddCell

PreemptRelNbPerServTypeMbmsPsBkgndPtp

Number of times (per service type) a service is required to be released by pre-emption (MbmsPsBkgndPtp)

Data Source

RNC C-Node

Source Field

VS.PreemptRelNbPerServType.MbmsPsBkgndPtp

Source Section

FddCell

PreemptRelNbPerServTypeMbmsPsStrmPtm

Number of times (per service type) a service is required to be released by pre-emption (MbmsPsStrmPtm)

Data Source

RNC C-Node

Source Field

VS.PreemptRelNbPerServType.MbmsPsStrmPtm

Source Section

FddCell

PreemptRelNbPerServTypeMbmsPsStrmPtp

Number of times (per service type) a service is required to be released by pre-emption (MbmsPsStrmPtp)

Data Source

RNC C-Node

Source Field

VS.PreemptRelNbPerServType.MbmsPsStrmPtp

Source Section

FddCell

PreemptRelNbPerServTypePSBkgnd

Number of times (per service type) a service is required to be released by pre-emption (PSBkgnd)

Data Source

RNC C-Node

Source Field

VS.PreemptRelNbPerServType.PSBkgnd

Source Section

FddCell

PreemptRelNbPerServTypePSIntr

Number of times (per service type) a service is required to be released by pre-emption (PSIntr)

Data Source

RNC C-Node

© Copyright IBM Corp. 1999, 2009. All rights reserved.

Source Field

VS.PreemptRelNbPerServType.PSIntr

Source Section

FddCell

PreemptRelNbPerServTypePSIntrSig

Number of times (per service type) a service is required to be released by pre-emption (PSIntrSig)

Data Source

RNC C-Node

Source Field

VS.PreemptRelNbPerServType.PSIntrSig

Source Section

FddCell

PreemptRelNbPerServTypePSStrm

Number of times (per service type) a service is required to be released by pre-emption (PSStrm)

Data Source

RNC C-Node

Source Field

VS.PreemptRelNbPerServType.PSStrm

Source Section

FddCell

PreemptRelNbPerServTypeSpeech

Number of times (per service type) a service is required to be released by pre-emption (Speech)

Data Source

RNC C-Node

Source Field

VS.PreemptRelNbPerServType.Speech

Source Section

FddCell

PreemptRelNbPerServTypeVideoTel

Number of times (per service type) a service is required to be released by pre-emption (VideoTel)

Data Source

RNC C-Node

Source Field

VS.PreemptRelNbPerServType.VideoTel

Source Section

FddCell

PreemptRelNbPerServTypeVoiceOverIP

Number of times (per service type) a service is required to be released by pre-emption (VoiceOverIP)

Data Source

RNC C-Node

Source Field

VS.PreemptRelNbPerServType.VoiceOverIP

Source Section

FddCell

primaryCpichPower

The power of the primary CPICH channel in the cell (Ref. 3GPP TS 25.433).

Data Source

OMC-U Bulk CM

© Copyright IBM Corp. 1999, 2009. All rights reserved.

Source Field

un:primaryCpichPower

Source Section

UtranCell

primarySchPower

The power of the primary synchronisation channel in the cell, DL Power (Ref. 3GPP TS 25.433).

Data Source

OMC-U Bulk CM

Source Field

un:primarySchPower

Source Section

UtranCell

primaryScramblingCode

The primary DL scrambling code used by the cell (Ref. 3GPP TS 25.433).

Data Source

OMC-U Bulk CM

Source Field

un:primaryScramblingCode

Source Section

UtranCell

PsDropRelocAtt

The number of PS call released abnormally. (Att)

Data Source

RNC C-Node

Source Field

VS.PsDropReloc.Att

Source Section

FddCell

PsDropRelocHsdpaAtt

The number of PS call released abnormally. (HsdpaAtt)

Data Source

RNC C-Node

Source Field

VS.PsDropReloc.HsdpaAtt

Source Section

FddCell

PsLocalRegState2FailureCnInvalSub

PS Local Registration Failure at state 2. (CnInvalSub)

Data Source

RNC C-Node

Source Field

VS.PsLocalRegState2Failure.CnInvalSub

Source Section

FddCell

PsLocalRegState2FailureNo7Fail

PS Local Registration Failure at state 2. (No7Fail)

Data Source

RNC C-Node

Source Field

VS.PsLocalRegState2Failure.No7Fail

© Copyright IBM Corp. 1999, 2009. All rights reserved.

Source Section

FddCell

PsLocalRegState2FailureRrcFail

PS Local Registration Failure at state 2. (RrcFail)

Data Source

RNC C-Node

Source Field

VS.PsLocalRegState2Failure.RrcFail

Source Section

FddCell

PsMoCallAvgHoldingTimeBgrdAvg

PS mobile originating call average holding time (Avg)

Data Source

RNC C-Node

Source Field

VS.PsMoCallAvgHoldingTime.Bgrd.Avg

Source Section

FddCell

PsMoCallAvgHoldingTimeBgrdCum

PS mobile originating call average holding time (Cum)

Data Source

RNC C-Node

Source Field

VS.PsMoCallAvgHoldingTime.Bgrd.Cum

Source Section

FddCell

PsMoCallAvgHoldingTimeBgrdMax

PS mobile originating call average holding time (Max)

Data Source

RNC C-Node

Source Field

VS.PsMoCallAvgHoldingTime.Bgrd.Max

Source Section

FddCell

PsMoCallAvgHoldingTimeBgrdMin

PS mobile originating call average holding time (Min)

Data Source

RNC C-Node

Source Field

VS.PsMoCallAvgHoldingTime.Bgrd.Min

Source Section

FddCell

PsMoCallAvgHoldingTimeBgrdNbEvt

PS mobile originating call average holding time (NbEvt)

Data Source

RNC C-Node

Source Field

VS.PsMoCallAvgHoldingTime.Bgrd.NbEvt

Source Section

FddCell

PsMoCallAvgHoldingTimeConvAvg

PS mobile originating call average holding time (Avg)

© Copyright IBM Corp. 1999, 2009. All rights reserved.

Data Source

RNC C-Node

Source Field

VS.PsMoCallAvgHoldingTime.Conv.Avg

Source Section

FddCell

PsMoCallAvgHoldingTimeConvCum

PS mobile originating call average holding time (Cum)

Data Source

RNC C-Node

Source Field

VS.PsMoCallAvgHoldingTime.Conv.Cum

Source Section

FddCell

PsMoCallAvgHoldingTimeConvMax

PS mobile originating call average holding time (Max)

Data Source

RNC C-Node

Source Field

VS.PsMoCallAvgHoldingTime.Conv.Max

Source Section

FddCell

PsMoCallAvgHoldingTimeConvMin

PS mobile originating call average holding time (Min)

Data Source

RNC C-Node

Source Field

VS.PsMoCallAvgHoldingTime.Conv.Min

Source Section

FddCell

PsMoCallAvgHoldingTimeConvNbEvt

PS mobile originating call average holding time (NbEvt)

Data Source

RNC C-Node

Source Field

VS.PsMoCallAvgHoldingTime.Conv.NbEvt

Source Section

FddCell

PsMoCallAvgHoldingTimeEmerAvg

PS mobile originating call average holding time (Avg)

Data Source

RNC C-Node

Source Field

VS.PsMoCallAvgHoldingTime.Emer.Avg

Source Section

FddCell

PsMoCallAvgHoldingTimeEmerCum

PS mobile originating call average holding time (Cum)

Data Source

RNC C-Node

Source Field

VS.PsMoCallAvgHoldingTime.Emer.Cum

© Copyright IBM Corp. 1999, 2009. All rights reserved.

Source Section

FddCell

PsMoCallAvgHoldingTimeEmerMax

PS mobile originating call average holding time (Max)

Data Source

RNC C-Node

Source Field

VS.PsMoCallAvgHoldingTime.Emer.Max

Source Section

FddCell

PsMoCallAvgHoldingTimeEmerMin

PS mobile originating call average holding time (Min)

Data Source

RNC C-Node

Source Field

VS.PsMoCallAvgHoldingTime.Emer.Min

Source Section

FddCell

PsMoCallAvgHoldingTimeEmerNbEvt

PS mobile originating call average holding time (NbEvt)

Data Source

RNC C-Node

Source Field

VS.PsMoCallAvgHoldingTime.Emer.NbEvt

Source Section

FddCell

PsMoCallAvgHoldingTimeIntactAvg

PS mobile originating call average holding time (Avg)

Data Source

RNC C-Node

Source Field

VS.PsMoCallAvgHoldingTime.Intact.Avg

Source Section

FddCell

PsMoCallAvgHoldingTimeIntactCum

PS mobile originating call average holding time (Cum)

Data Source

RNC C-Node

Source Field

VS.PsMoCallAvgHoldingTime.Intact.Cum

Source Section

FddCell

PsMoCallAvgHoldingTimeIntactMax

PS mobile originating call average holding time (Max)

Data Source

RNC C-Node

Source Field

VS.PsMoCallAvgHoldingTime.Intact.Max

Source Section

FddCell

PsMoCallAvgHoldingTimeIntactMin

PS mobile originating call average holding time (Min)

© Copyright IBM Corp. 1999, 2009. All rights reserved.

Data Source

RNC C-Node

Source Field

VS.PsMoCallAvgHoldingTime.Intact.Min

Source Section

FddCell

PsMoCallAvgHoldingTimeIntactNbEvt

PS mobile originating call average holding time (NbEvt)

Data Source

RNC C-Node

Source Field

VS.PsMoCallAvgHoldingTime.Intact.NbEvt

Source Section

FddCell

PsMoCallAvgHoldingTimePresvAvg

PS mobile originating call average holding time (Avg)

Data Source

RNC C-Node

Source Field

VS.PsMoCallAvgHoldingTime.Presv.Avg

Source Section

FddCell

PsMoCallAvgHoldingTimePresvCum

PS mobile originating call average holding time (Cum)

Data Source

RNC C-Node

Source Field

VS.PsMoCallAvgHoldingTime.Presv.Cum

Source Section

FddCell

PsMoCallAvgHoldingTimePresvMax

PS mobile originating call average holding time (Max)

Data Source

RNC C-Node

Source Field

VS.PsMoCallAvgHoldingTime.Presv.Max

Source Section

FddCell

PsMoCallAvgHoldingTimePresvMin

PS mobile originating call average holding time (Min)

Data Source

RNC C-Node

Source Field

VS.PsMoCallAvgHoldingTime.Presv.Min

Source Section

FddCell

PsMoCallAvgHoldingTimePresvNbEvt

PS mobile originating call average holding time (NbEvt)

Data Source

RNC C-Node

Source Field

VS.PsMoCallAvgHoldingTime.Presv.NbEvt

© Copyright IBM Corp. 1999, 2009. All rights reserved.

Source Section

FddCell

PsMoCallAvgHoldingTimeStrmAvg

PS mobile originating call average holding time (Avg)

Data Source

RNC C-Node

Source Field

VS.PsMoCallAvgHoldingTime.Strm.Avg

Source Section

FddCell

PsMoCallAvgHoldingTimeStrmCum

PS mobile originating call average holding time (Cum)

Data Source

RNC C-Node

Source Field

VS.PsMoCallAvgHoldingTime.Strm.Cum

Source Section

FddCell

PsMoCallAvgHoldingTimeStrmMax

PS mobile originating call average holding time (Max)

Data Source

RNC C-Node

Source Field

VS.PsMoCallAvgHoldingTime.Strm.Max

Source Section

FddCell

PsMoCallAvgHoldingTimeStrmMin

PS mobile originating call average holding time (Min)

Data Source

RNC C-Node

Source Field

VS.PsMoCallAvgHoldingTime.Strm.Min

Source Section

FddCell

PsMoCallAvgHoldingTimeStrmNbEvt

PS mobile originating call average holding time (NbEvt)

Data Source

RNC C-Node

Source Field

VS.PsMoCallAvgHoldingTime.Strm.NbEvt

Source Section

FddCell

PsMoCallAvgHoldingTimeSubsAvg

PS mobile originating call average holding time (Avg)

Data Source

RNC C-Node

Source Field

VS.PsMoCallAvgHoldingTime.Subs.Avg

Source Section

FddCell

PsMoCallAvgHoldingTimeSubsCum

PS mobile originating call average holding time (Cum)

© Copyright IBM Corp. 1999, 2009. All rights reserved.

Data Source

RNC C-Node

Source Field

VS.PsMoCallAvgHoldingTime.Subs.Cum

Source Section

FddCell

PsMoCallAvgHoldingTimeSubsMax

PS mobile originating call average holding time (Max)

Data Source

RNC C-Node

Source Field

VS.PsMoCallAvgHoldingTime.Subs.Max

Source Section

FddCell

PsMoCallAvgHoldingTimeSubsMin

PS mobile originating call average holding time (Min)

Data Source

RNC C-Node

Source Field

VS.PsMoCallAvgHoldingTime.Subs.Min

Source Section

FddCell

PsMoCallAvgHoldingTimeSubsNbEvt

PS mobile originating call average holding time (NbEvt)

Data Source

RNC C-Node

Source Field

VS.PsMoCallAvgHoldingTime.Subs.NbEvt

Source Section

FddCell

PsMoRabCallAvgSetupTimeBgrdAvg

PS mobile originating RAB call average set up time (Avg)

Data Source

RNC C-Node

Source Field

VS.PsMoRabCallAvgSetupTime.Bgrd.Avg

Source Section

FddCell

PsMoRabCallAvgSetupTimeBgrdCum

PS mobile originating RAB call average set up time (Cum)

Data Source

RNC C-Node

Source Field

VS.PsMoRabCallAvgSetupTime.Bgrd.Cum

Source Section

FddCell

PsMoRabCallAvgSetupTimeBgrdMax

PS mobile originating RAB call average set up time (Max)

Data Source

RNC C-Node

Source Field

VS.PsMoRabCallAvgSetupTime.Bgrd.Max

© Copyright IBM Corp. 1999, 2009. All rights reserved.

Source Section

FddCell

PsMoRabCallAvgSetupTimeBgrdMin

PS mobile originating RAB call average set up time (Min)

Data Source

RNC C-Node

Source Field

VS.PsMoRabCallAvgSetupTime.Bgrd.Min

Source Section

FddCell

PsMoRabCallAvgSetupTimeBgrdNbEvt

PS mobile originating RAB call average set up time (NbEvt)

Data Source

RNC C-Node

Source Field

VS.PsMoRabCallAvgSetupTime.Bgrd.NbEvt

Source Section

FddCell

PsMoRabCallAvgSetupTimeConvAvg

PS mobile originating RAB call average set up time (Avg)

Data Source

RNC C-Node

Source Field

VS.PsMoRabCallAvgSetupTime.Conv.Avg

Source Section

FddCell

PsMoRabCallAvgSetupTimeConvCum

PS mobile originating RAB call average set up time (Cum)

Data Source

RNC C-Node

Source Field

VS.PsMoRabCallAvgSetupTime.Conv.Cum

Source Section

FddCell

PsMoRabCallAvgSetupTimeConvMax

PS mobile originating RAB call average set up time (Max)

Data Source

RNC C-Node

Source Field

VS.PsMoRabCallAvgSetupTime.Conv.Max

Source Section

FddCell

PsMoRabCallAvgSetupTimeConvMin

PS mobile originating RAB call average set up time (Min)

Data Source

RNC C-Node

Source Field

VS.PsMoRabCallAvgSetupTime.Conv.Min

Source Section

FddCell

PsMoRabCallAvgSetupTimeConvNbEvt

PS mobile originating RAB call average set up time (NbEvt)

© Copyright IBM Corp. 1999, 2009. All rights reserved.

Data Source

RNC C-Node

Source Field

VS.PsMoRabCallAvgSetupTime.Conv.NbEvt

Source Section

FddCell

PsMoRabCallAvgSetupTimeEmerAvg

PS mobile originating RAB call average set up time (Avg)

Data Source

RNC C-Node

Source Field

VS.PsMoRabCallAvgSetupTime.Emer.Avg

Source Section

FddCell

PsMoRabCallAvgSetupTimeEmerCum

PS mobile originating RAB call average set up time (Cum)

Data Source

RNC C-Node

Source Field

VS.PsMoRabCallAvgSetupTime.Emer.Cum

Source Section

FddCell

PsMoRabCallAvgSetupTimeEmerMax

PS mobile originating RAB call average set up time (Max)

Data Source

RNC C-Node

Source Field

VS.PsMoRabCallAvgSetupTime.Emer.Max

Source Section

FddCell

PsMoRabCallAvgSetupTimeEmerMin

PS mobile originating RAB call average set up time (Min)

Data Source

RNC C-Node

Source Field

VS.PsMoRabCallAvgSetupTime.Emer.Min

Source Section

FddCell

PsMoRabCallAvgSetupTimeEmerNbEvt

PS mobile originating RAB call average set up time (NbEvt)

Data Source

RNC C-Node

Source Field

VS.PsMoRabCallAvgSetupTime.Emer.NbEvt

Source Section

FddCell

PsMoRabCallAvgSetupTimeIntactAvg

PS mobile originating RAB call average set up time (Avg)

Data Source

RNC C-Node

Source Field

VS.PsMoRabCallAvgSetupTime.Intact.Avg

© Copyright IBM Corp. 1999, 2009. All rights reserved.

Source Section

FddCell

PsMoRabCallAvgSetupTimeIntactCum

PS mobile originating RAB call average set up time (Cum)

Data Source

RNC C-Node

Source Field

VS.PsMoRabCallAvgSetupTime.Intact.Cum

Source Section

FddCell

PsMoRabCallAvgSetupTimeIntactMax

PS mobile originating RAB call average set up time (Max)

Data Source

RNC C-Node

Source Field

VS.PsMoRabCallAvgSetupTime.Intact.Max

Source Section

FddCell

PsMoRabCallAvgSetupTimeIntactMin

PS mobile originating RAB call average set up time (Min)

Data Source

RNC C-Node

Source Field

VS.PsMoRabCallAvgSetupTime.Intact.Min

Source Section

FddCell

PsMoRabCallAvgSetupTimeIntactNbEvt

PS mobile originating RAB call average set up time (NbEvt)

Data Source

RNC C-Node

Source Field

VS.PsMoRabCallAvgSetupTime.Intact.NbEvt

Source Section

FddCell

PsMoRabCallAvgSetupTimePresvAvg

PS mobile originating RAB call average set up time (Avg)

Data Source

RNC C-Node

Source Field

VS.PsMoRabCallAvgSetupTime.Presv.Avg

Source Section

FddCell

PsMoRabCallAvgSetupTimePresvCum

PS mobile originating RAB call average set up time (Cum)

Data Source

RNC C-Node

Source Field

VS.PsMoRabCallAvgSetupTime.Presv.Cum

Source Section

FddCell

PsMoRabCallAvgSetupTimePresvMax

PS mobile originating RAB call average set up time (Max)

© Copyright IBM Corp. 1999, 2009. All rights reserved.

Data Source

RNC C-Node

Source Field

VS.PsMoRabCallAvgSetupTime.Presv.Max

Source Section

FddCell

PsMoRabCallAvgSetupTimePresvMin

PS mobile originating RAB call average set up time (Min)

Data Source

RNC C-Node

Source Field

VS.PsMoRabCallAvgSetupTime.Presv.Min

Source Section

FddCell

PsMoRabCallAvgSetupTimePresvNbEvt

PS mobile originating RAB call average set up time (NbEvt)

Data Source

RNC C-Node

Source Field

VS.PsMoRabCallAvgSetupTime.Presv.NbEvt

Source Section

FddCell

PsMoRabCallAvgSetupTimeStrmAvg

PS mobile originating RAB call average set up time (Avg)

Data Source

RNC C-Node

Source Field

VS.PsMoRabCallAvgSetupTime.Strm.Avg

Source Section

FddCell

PsMoRabCallAvgSetupTimeStrmCum

PS mobile originating RAB call average set up time (Cum)

Data Source

RNC C-Node

Source Field

VS.PsMoRabCallAvgSetupTime.Strm.Cum

Source Section

FddCell

PsMoRabCallAvgSetupTimeStrmMax

PS mobile originating RAB call average set up time (Max)

Data Source

RNC C-Node

Source Field

VS.PsMoRabCallAvgSetupTime.Strm.Max

Source Section

FddCell

PsMoRabCallAvgSetupTimeStrmMin

PS mobile originating RAB call average set up time (Min)

Data Source

RNC C-Node

Source Field

VS.PsMoRabCallAvgSetupTime.Strm.Min

© Copyright IBM Corp. 1999, 2009. All rights reserved.

Source Section

FddCell

PsMoRabCallAvgSetupTimeStrmNbEvt

PS mobile originating RAB call average set up time (NbEvt)

Data Source

RNC C-Node

Source Field

VS.PsMoRabCallAvgSetupTime.Strm.NbEvt

Source Section

FddCell

PsMoRabCallAvgSetupTimeSubsAvg

PS mobile originating RAB call average set up time (Avg)

Data Source

RNC C-Node

Source Field

VS.PsMoRabCallAvgSetupTime.Subs.Avg

Source Section

FddCell

PsMoRabCallAvgSetupTimeSubsCum

PS mobile originating RAB call average set up time (Cum)

Data Source

RNC C-Node

Source Field

VS.PsMoRabCallAvgSetupTime.Subs.Cum

Source Section

FddCell

PsMoRabCallAvgSetupTimeSubsMax

PS mobile originating RAB call average set up time (Max)

Data Source

RNC C-Node

Source Field

VS.PsMoRabCallAvgSetupTime.Subs.Max

Source Section

FddCell

PsMoRabCallAvgSetupTimeSubsMin

PS mobile originating RAB call average set up time (Min)

Data Source

RNC C-Node

Source Field

VS.PsMoRabCallAvgSetupTime.Subs.Min

Source Section

FddCell

PsMoRabCallAvgSetupTimeSubsNbEvt

PS mobile originating RAB call average set up time (NbEvt)

Data Source

RNC C-Node

Source Field

VS.PsMoRabCallAvgSetupTime.Subs.NbEvt

Source Section

FddCell

PsMoState2FailureCnActRejS2

number of PS mobile originating failure at state 2. (CnActRejS2)

© Copyright IBM Corp. 1999, 2009. All rights reserved.

Data Source

RNC C-Node

Source Field

VS.PsMoState2Failure.CnActRejS2

Source Section

FddCell

PsMoState2FailureCnInvalSubS2

number of PS mobile originating failure at state 2. (CnInvalSubS2)

Data Source

RNC C-Node

Source Field

VS.PsMoState2Failure.CnInvalSubS2

Source Section

FddCell

PsMoState2FailureCnMisApnS2

number of PS mobile originating failure at state 2. (CnMisApnS2)

Data Source

RNC C-Node

Source Field

VS.PsMoState2Failure.CnMisApnS2

Source Section

FddCell

PsMoState2FailureCnNcmpMsgS2

number of PS mobile originating failure at state 2. (CnNcmpMsgS2)

Data Source

RNC C-Node

Source Field

VS.PsMoState2Failure.CnNcmpMsgS2

Source Section

FddCell

PsMoState2FailureCnNsubRoS2

number of PS mobile originating failure at state 2. (CnNsubRoS2)

Data Source

RNC C-Node

Source Field

VS.PsMoState2Failure.CnNsubRoS2

Source Section

FddCell

PsMoState2FailureCnNsupSoS2

number of PS mobile originating failure at state 2. (CnNsupSoS2)

Data Source

RNC C-Node

Source Field

VS.PsMoState2Failure.CnNsupSoS2

Source Section

FddCell

PsMoState2FailureCnOperBarS2

number of PS mobile originating failure at state 2. (CnOperBarS2)

Data Source

RNC C-Node

Source Field

VS.PsMoState2Failure.CnOperBarS2

© Copyright IBM Corp. 1999, 2009. All rights reserved.

Source Section

FddCell

PsMoState2FailureCnOrgRelMmS2

number of PS mobile originating failure at state 2. (CnOrgRelMmS2)

Data Source

RNC C-Node

Source Field

VS.PsMoState2Failure.CnOrgRelMmS2

Source Section

FddCell

PsMoState2FailureCnProtoErrS2

number of PS mobile originating failure at state 2. (CnProtoErrS2)

Data Source

RNC C-Node

Source Field

VS.PsMoState2Failure.CnProtoErrS2

Source Section

FddCell

PsMoState2FailureCnRejUnspeS2

number of PS mobile originating failure at state 2. (CnRejUnspeS2)

Data Source

RNC C-Node

Source Field

VS.PsMoState2Failure.CnRejUnspeS2

Source Section

FddCell

PsMoState2FailureCnRoamRestS2

number of PS mobile originating failure at state 2. (CnRoamRestS2)

Data Source

RNC C-Node

Source Field

VS.PsMoState2Failure.CnRoamRestS2

Source Section

FddCell

PsMoState2FailureCnSoTempS2

number of PS mobile originating failure at state 2. (CnSoTempS2)

Data Source

RNC C-Node

Source Field

VS.PsMoState2Failure.CnSoTempS2

Source Section

FddCell

PsMoState2FailureCnUnkPdpS2

number of PS mobile originating failure at state 2. (CnUnkPdpS2)

Data Source

RNC C-Node

Source Field

VS.PsMoState2Failure.CnUnkPdpS2

Source Section

FddCell

PsMoState3FailureCnRejUnspeS3

number of PS mobile originating failure at state 3. (CnRejUnspeS3)

© Copyright IBM Corp. 1999, 2009. All rights reserved.

Data Source

RNC C-Node

Source Field

VS.PsMoState3Failure.CnRejUnspeS3

Source Section

FddCell

PsMoState4FailureCnRejUnspeS4

number of PS mobile originating failure at state 4. (CnRejUnspeS4)

Data Source

RNC C-Node

Source Field

VS.PsMoState4Failure.CnRejUnspeS4

Source Section

FddCell

PsMtCallAvgHoldingTimeBgrdAvg

PS mobile terminating call average holding time (Avg)

Data Source

RNC C-Node

Source Field

VS.PsMtCallAvgHoldingTime.Bgrd.Avg

Source Section

FddCell

PsMtCallAvgHoldingTimeBgrdCum

PS mobile terminating call average holding time (Cum)

Data Source

RNC C-Node

Source Field

VS.PsMtCallAvgHoldingTime.Bgrd.Cum

Source Section

FddCell

PsMtCallAvgHoldingTimeBgrdMax

PS mobile terminating call average holding time (Max)

Data Source

RNC C-Node

Source Field

VS.PsMtCallAvgHoldingTime.Bgrd.Max

Source Section

FddCell

PsMtCallAvgHoldingTimeBgrdMin

PS mobile terminating call average holding time (Min)

Data Source

RNC C-Node

Source Field

VS.PsMtCallAvgHoldingTime.Bgrd.Min

Source Section

FddCell

PsMtCallAvgHoldingTimeBgrdNbEvt

PS mobile terminating call average holding time (NbEvt)

Data Source

RNC C-Node

Source Field

VS.PsMtCallAvgHoldingTime.Bgrd.NbEvt

© Copyright IBM Corp. 1999, 2009. All rights reserved.

Source Section

FddCell

PsMtCallAvgHoldingTimeConvAvg

PS mobile terminating call average holding time (Avg)

Data Source

RNC C-Node

Source Field

VS.PsMtCallAvgHoldingTime.Conv.Avg

Source Section

FddCell

PsMtCallAvgHoldingTimeConvCum

PS mobile terminating call average holding time (Cum)

Data Source

RNC C-Node

Source Field

VS.PsMtCallAvgHoldingTime.Conv.Cum

Source Section

FddCell

PsMtCallAvgHoldingTimeConvMax

PS mobile terminating call average holding time (Max)

Data Source

RNC C-Node

Source Field

VS.PsMtCallAvgHoldingTime.Conv.Max

Source Section

FddCell

PsMtCallAvgHoldingTimeConvMin

PS mobile terminating call average holding time (Min)

Data Source

RNC C-Node

Source Field

VS.PsMtCallAvgHoldingTime.Conv.Min

Source Section

FddCell

PsMtCallAvgHoldingTimeConvNbEvt

PS mobile terminating call average holding time (NbEvt)

Data Source

RNC C-Node

Source Field

VS.PsMtCallAvgHoldingTime.Conv.NbEvt

Source Section

FddCell

PsMtCallAvgHoldingTimeIntactAvg

PS mobile terminating call average holding time (Avg)

Data Source

RNC C-Node

Source Field

VS.PsMtCallAvgHoldingTime.Intact.Avg

Source Section

FddCell

PsMtCallAvgHoldingTimeIntactCum

PS mobile terminating call average holding time (Cum)

© Copyright IBM Corp. 1999, 2009. All rights reserved.

Data Source

RNC C-Node

Source Field

VS.PsMtCallAvgHoldingTime.Intact.Cum

Source Section

FddCell

PsMtCallAvgHoldingTimeIntactMax

PS mobile terminating call average holding time (Max)

Data Source

RNC C-Node

Source Field

VS.PsMtCallAvgHoldingTime.Intact.Max

Source Section

FddCell

PsMtCallAvgHoldingTimeIntactMin

PS mobile terminating call average holding time (Min)

Data Source

RNC C-Node

Source Field

VS.PsMtCallAvgHoldingTime.Intact.Min

Source Section

FddCell

PsMtCallAvgHoldingTimeIntactNbEvt

PS mobile terminating call average holding time (NbEvt)

Data Source

RNC C-Node

Source Field

VS.PsMtCallAvgHoldingTime.Intact.NbEvt

Source Section

FddCell

PsMtCallAvgHoldingTimePresvAvg

PS mobile terminating call average holding time (Avg)

Data Source

RNC C-Node

Source Field

VS.PsMtCallAvgHoldingTime.Presv.Avg

Source Section

FddCell

PsMtCallAvgHoldingTimePresvCum

PS mobile terminating call average holding time (Cum)

Data Source

RNC C-Node

Source Field

VS.PsMtCallAvgHoldingTime.Presv.Cum

Source Section

FddCell

PsMtCallAvgHoldingTimePresvMax

PS mobile terminating call average holding time (Max)

Data Source

RNC C-Node

Source Field

VS.PsMtCallAvgHoldingTime.Presv.Max

© Copyright IBM Corp. 1999, 2009. All rights reserved.

Source Section

FddCell

PsMtCallAvgHoldingTimePresvMin

PS mobile terminating call average holding time (Min)

Data Source

RNC C-Node

Source Field

VS.PsMtCallAvgHoldingTime.Presv.Min

Source Section

FddCell

PsMtCallAvgHoldingTimePresvNbEvt

PS mobile terminating call average holding time (NbEvt)

Data Source

RNC C-Node

Source Field

VS.PsMtCallAvgHoldingTime.Presv.NbEvt

Source Section

FddCell

PsMtCallAvgHoldingTimeStrmAvg

PS mobile terminating call average holding time (Avg)

Data Source

RNC C-Node

Source Field

VS.PsMtCallAvgHoldingTime.Strm.Avg

Source Section

FddCell

PsMtCallAvgHoldingTimeStrmCum

PS mobile terminating call average holding time (Cum)

Data Source

RNC C-Node

Source Field

VS.PsMtCallAvgHoldingTime.Strm.Cum

Source Section

FddCell

PsMtCallAvgHoldingTimeStrmMax

PS mobile terminating call average holding time (Max)

Data Source

RNC C-Node

Source Field

VS.PsMtCallAvgHoldingTime.Strm.Max

Source Section

FddCell

PsMtCallAvgHoldingTimeStrmMin

PS mobile terminating call average holding time (Min)

Data Source

RNC C-Node

Source Field

VS.PsMtCallAvgHoldingTime.Strm.Min

Source Section

FddCell

PsMtCallAvgHoldingTimeStrmNbEvt

PS mobile terminating call average holding time (NbEvt)

© Copyright IBM Corp. 1999, 2009. All rights reserved.

Data Source

RNC C-Node

Source Field

VS.PsMtCallAvgHoldingTime.Strm.NbEvt

Source Section

FddCell

PsMtRabCallAvgSetupTimeBgrdAvg

PS mobile terminating RAB call average set up time (Avg)

Data Source

RNC C-Node

Source Field

VS.PsMtRabCallAvgSetupTime.Bgrd.Avg

Source Section

FddCell

PsMtRabCallAvgSetupTimeBgrdCum

PS mobile terminating RAB call average set up time (Cum)

Data Source

RNC C-Node

Source Field

VS.PsMtRabCallAvgSetupTime.Bgrd.Cum

Source Section

FddCell

PsMtRabCallAvgSetupTimeBgrdMax

PS mobile terminating RAB call average set up time (Max)

Data Source

RNC C-Node

Source Field

VS.PsMtRabCallAvgSetupTime.Bgrd.Max

Source Section

FddCell

PsMtRabCallAvgSetupTimeBgrdMin

PS mobile terminating RAB call average set up time (Min)

Data Source

RNC C-Node

Source Field

VS.PsMtRabCallAvgSetupTime.Bgrd.Min

Source Section

FddCell

PsMtRabCallAvgSetupTimeBgrdNbEvt

PS mobile terminating RAB call average set up time (NbEvt)

Data Source

RNC C-Node

Source Field

VS.PsMtRabCallAvgSetupTime.Bgrd.NbEvt

Source Section

FddCell

PsMtRabCallAvgSetupTimeConvAvg

PS mobile terminating RAB call average set up time (Avg)

Data Source

RNC C-Node

Source Field

VS.PsMtRabCallAvgSetupTime.Conv.Avg

© Copyright IBM Corp. 1999, 2009. All rights reserved.

Source Section

FddCell

PsMtRabCallAvgSetupTimeConvCum

PS mobile terminating RAB call average set up time (Cum)

Data Source

RNC C-Node

Source Field

VS.PsMtRabCallAvgSetupTime.Conv.Cum

Source Section

FddCell

PsMtRabCallAvgSetupTimeConvMax

PS mobile terminating RAB call average set up time (Max)

Data Source

RNC C-Node

Source Field

VS.PsMtRabCallAvgSetupTime.Conv.Max

Source Section

FddCell

PsMtRabCallAvgSetupTimeConvMin

PS mobile terminating RAB call average set up time (Min)

Data Source

RNC C-Node

Source Field

VS.PsMtRabCallAvgSetupTime.Conv.Min

Source Section

FddCell

PsMtRabCallAvgSetupTimeConvNbEvt

PS mobile terminating RAB call average set up time (NbEvt)

Data Source

RNC C-Node

Source Field

VS.PsMtRabCallAvgSetupTime.Conv.NbEvt

Source Section

FddCell

PsMtRabCallAvgSetupTimeIntactAvg

PS mobile terminating RAB call average set up time (Avg)

Data Source

RNC C-Node

Source Field

VS.PsMtRabCallAvgSetupTime.Intact.Avg

Source Section

FddCell

PsMtRabCallAvgSetupTimeIntactCum

PS mobile terminating RAB call average set up time (Cum)

Data Source

RNC C-Node

Source Field

VS.PsMtRabCallAvgSetupTime.Intact.Cum

Source Section

FddCell

PsMtRabCallAvgSetupTimeIntactMax

PS mobile terminating RAB call average set up time (Max)

© Copyright IBM Corp. 1999, 2009. All rights reserved.

Data Source

RNC C-Node

Source Field

VS.PsMtRabCallAvgSetupTime.Intact.Max

Source Section

FddCell

PsMtRabCallAvgSetupTimeIntactMin

PS mobile terminating RAB call average set up time (Min)

Data Source

RNC C-Node

Source Field

VS.PsMtRabCallAvgSetupTime.Intact.Min

Source Section

FddCell

PsMtRabCallAvgSetupTimeIntactNbEvt

PS mobile terminating RAB call average set up time (NbEvt)

Data Source

RNC C-Node

Source Field

VS.PsMtRabCallAvgSetupTime.Intact.NbEvt

Source Section

FddCell

PsMtRabCallAvgSetupTimePresvAvg

PS mobile terminating RAB call average set up time (Avg)

Data Source

RNC C-Node

Source Field

VS.PsMtRabCallAvgSetupTime.Presv.Avg

Source Section

FddCell

PsMtRabCallAvgSetupTimePresvCum

PS mobile terminating RAB call average set up time (Cum)

Data Source

RNC C-Node

Source Field

VS.PsMtRabCallAvgSetupTime.Presv.Cum

Source Section

FddCell

PsMtRabCallAvgSetupTimePresvMax

PS mobile terminating RAB call average set up time (Max)

Data Source

RNC C-Node

Source Field

VS.PsMtRabCallAvgSetupTime.Presv.Max

Source Section

FddCell

PsMtRabCallAvgSetupTimePresvMin

PS mobile terminating RAB call average set up time (Min)

Data Source

RNC C-Node

Source Field

VS.PsMtRabCallAvgSetupTime.Presv.Min

© Copyright IBM Corp. 1999, 2009. All rights reserved.

Source Section

FddCell

PsMtRabCallAvgSetupTimePresvNbEvt

PS mobile terminating RAB call average set up time (NbEvt)

Data Source

RNC C-Node

Source Field

VS.PsMtRabCallAvgSetupTime.Presv.NbEvt

Source Section

FddCell

PsMtRabCallAvgSetupTimeStrmAvg

PS mobile terminating RAB call average set up time (Avg)

Data Source

RNC C-Node

Source Field

VS.PsMtRabCallAvgSetupTime.Strm.Avg

Source Section

FddCell

PsMtRabCallAvgSetupTimeStrmCum

PS mobile terminating RAB call average set up time (Cum)

Data Source

RNC C-Node

Source Field

VS.PsMtRabCallAvgSetupTime.Strm.Cum

Source Section

FddCell

PsMtRabCallAvgSetupTimeStrmMax

PS mobile terminating RAB call average set up time (Max)

Data Source

RNC C-Node

Source Field

VS.PsMtRabCallAvgSetupTime.Strm.Max

Source Section

FddCell

PsMtRabCallAvgSetupTimeStrmMin

PS mobile terminating RAB call average set up time (Min)

Data Source

RNC C-Node

Source Field

VS.PsMtRabCallAvgSetupTime.Strm.Min

Source Section

FddCell

PsMtRabCallAvgSetupTimeStrmNbEvt

PS mobile terminating RAB call average set up time (NbEvt)

Data Source

RNC C-Node

Source Field

VS.PsMtRabCallAvgSetupTime.Strm.NbEvt

Source Section

FddCell

PsMtState2FailureCnActRejS2

number of PS mobile terminating failure at state 2. (CnActRejS2)

© Copyright IBM Corp. 1999, 2009. All rights reserved.

Data Source

RNC C-Node

Source Field

VS.PsMtState2Failure.CnActRejS2

Source Section

FddCell

PsMtState2FailureCnInvalSubS2

number of PS mobile terminating failure at state 2. (CnInvalSubS2)

Data Source

RNC C-Node

Source Field

VS.PsMtState2Failure.CnInvalSubS2

Source Section

FddCell

PsMtState2FailureCnMisApnS2

number of PS mobile terminating failure at state 2. (CnMisApnS2)

Data Source

RNC C-Node

Source Field

VS.PsMtState2Failure.CnMisApnS2

Source Section

FddCell

PsMtState2FailureCnNcmpMsgS2

number of PS mobile terminating failure at state 2. (CnNcmpMsgS2)

Data Source

RNC C-Node

Source Field

VS.PsMtState2Failure.CnNcmpMsgS2

Source Section

FddCell

PsMtState2FailureCnNsubRoS2

number of PS mobile terminating failure at state 2. (CnNsubRoS2)

Data Source

RNC C-Node

Source Field

VS.PsMtState2Failure.CnNsubRoS2

Source Section

FddCell

PsMtState2FailureCnNsupSoS2

number of PS mobile terminating failure at state 2. (CnNsupSoS2)

Data Source

RNC C-Node

Source Field

VS.PsMtState2Failure.CnNsupSoS2

Source Section

FddCell

PsMtState2FailureCnOrgRelMmS2

number of PS mobile terminating failure at state 2. (CnOrgRelMmS2)

Data Source

RNC C-Node

Source Field

VS.PsMtState2Failure.CnOrgRelMmS2

© Copyright IBM Corp. 1999, 2009. All rights reserved.

Source Section

FddCell

PsMtState2FailureCnProtoErrS2

number of PS mobile terminating failure at state 2. (CnProtoErrS2)

Data Source

RNC C-Node

Source Field

VS.PsMtState2Failure.CnProtoErrS2

Source Section

FddCell

PsMtState2FailureCnRejUnspeS2

number of PS mobile terminating failure at state 2. (CnRejUnspeS2)

Data Source

RNC C-Node

Source Field

VS.PsMtState2Failure.CnRejUnspeS2

Source Section

FddCell

PsMtState2FailureCnRoamRestS2

number of PS mobile terminating failure at state 2. (CnRoamRestS2)

Data Source

RNC C-Node

Source Field

VS.PsMtState2Failure.CnRoamRestS2

Source Section

FddCell

PsMtState2FailureCnSoTempS2

number of PS mobile terminating failure at state 2. (CnSoTempS2)

Data Source

RNC C-Node

Source Field

VS.PsMtState2Failure.CnSoTempS2

Source Section

FddCell

PsMtState2FailureCnUnkPdpS2

number of PS mobile terminating failure at state 2. (CnUnkPdpS2)

Data Source

RNC C-Node

Source Field

VS.PsMtState2Failure.CnUnkPdpS2

Source Section

FddCell

PsMtState3FailureCnRejUnspeS3

number of PS mobile terminating failure at state 3. (CnRejUnspeS3)

Data Source

RNC C-Node

Source Field

VS.PsMtState3Failure.CnRejUnspeS3

Source Section

FddCell

PsMtState4FailureCnRejUnspeS4

number of PS mobile terminating failure at state 4. (CnRejUnspeS4)

© Copyright IBM Corp. 1999, 2009. All rights reserved.

Data Source

RNC C-Node

Source Field

VS.PsMtState4Failure.CnRejUnspeS4

Source Section

FddCell

PsSuccRelocAtt

The number of PS call allocated at new RNC by relocation successful (Att)

Data Source

RNC C-Node

Source Field

VS.PsSuccReloc.Att

Source Section

FddCell

PsSuccRelocHsdpaAtt

The number of PS call allocated at new RNC by relocation successful (HsdpaAtt)

Data Source

RNC C-Node

Source Field

VS.PsSuccReloc.HsdpaAtt

Source Section

FddCell

QosDlCemLdCellPreemptClrCngstdAvg

Load counter that tracks the percentage of time during a collection period that a particular cell is considered congested by iRM because CEM shortage in downlink (Avg)

Data Source

RNC C-Node

Source Field

VS.QosDlCemLdCellPreemptClrCngstd.Avg

Source Section

FddCell

QosDlCemLdCellPreemptClrCngstdCum

Load counter that tracks the percentage of time during a collection period that a particular cell is considered congested by iRM because CEM shortage in downlink (Cum)

Data Source

RNC C-Node

Source Field

VS.QosDlCemLdCellPreemptClrCngstd.Cum

Source Section

FddCell

QosDlCemLdCellPreemptClrCngstdMax

Load counter that tracks the percentage of time during a collection period that a particular cell is considered congested by iRM because CEM shortage in downlink (Max)

Data Source

RNC C-Node

Source Field

VS.QosDlCemLdCellPreemptClrCngstd.Max

Source Section

FddCell

QosDlCemLdCellPreemptClrCngstdMin

Load counter that tracks the percentage of time during a collection period that a particular cell is considered congested by iRM because CEM shortage in downlink (Min)

© Copyright IBM Corp. 1999, 2009. All rights reserved.

Data Source

RNC C-Node

Source Field

VS.QosDlCemLdCellPreemptClrCngstd.Min

Source Section

FddCell

QosDlCemLdCellPreemptClrCngstdNbEvt

Load counter that tracks the percentage of time during a collection period that a particular cell is considered congested by iRM because CEM shortage in downlink (NbEvt)

Data Source

RNC C-Node

Source Field

VS.QosDlCemLdCellPreemptClrCngstd.NbEvt

Source Section

FddCell

QosDlCemLdClrRedAvg

Load counter that tracks the percentage of time during a collection period that a particular cell is considered red by CEM load because of CEM radio resource shortage in downlink (Avg)

Data Source

RNC C-Node

Source Field

VS.QosDlCemLdClrRed.Avg

Source Section

FddCell

QosDlCemLdClrRedCum

Load counter that tracks the percentage of time during a collection period that a particular cell is considered red by CEM load because of CEM radio resource shortage in downlink (Cum)

Data Source

RNC C-Node

Source Field

VS.QosDlCemLdClrRed.Cum

Source Section

FddCell

QosDlCemLdClrRedMax

Load counter that tracks the percentage of time during a collection period that a particular cell is considered red by CEM load because of CEM radio resource shortage in downlink (Max)

Data Source

RNC C-Node

Source Field

VS.QosDlCemLdClrRed.Max

Source Section

FddCell

QosDlCemLdClrRedMin

Load counter that tracks the percentage of time during a collection period that a particular cell is considered red by CEM load because of CEM radio resource shortage in downlink (Min)

Data Source

RNC C-Node

Source Field

VS.QosDlCemLdClrRed.Min

Source Section

FddCell

QosDlCemLdClrRedNbEvt

Load counter that tracks the percentage of time during a collection period that a particular cell is considered red by CEM load because of CEM radio resource shortage in downlink (NbEvt)

© Copyright IBM Corp. 1999, 2009. All rights reserved.

Data Source

RNC C-Node

Source Field

VS.QosDlCemLdClrRed.NbEvt

Source Section

FddCell

QosDlCemLdClrYellowAvg

Load counter that tracks the percentage of time during a collection period that a particular cell is considered yellow by CEM load because of CEM radio resource shortage in downlink (Avg)

Data Source

RNC C-Node

Source Field

VS.QosDlCemLdClrYellow.Avg

Source Section

FddCell

QosDlCemLdClrYellowCum

Load counter that tracks the percentage of time during a collection period that a particular cell is considered yellow by CEM load because of CEM radio resource shortage in downlink (Cum)

Data Source

RNC C-Node

Source Field

VS.QosDlCemLdClrYellow.Cum

Source Section

FddCell

QosDlCemLdClrYellowMax

Load counter that tracks the percentage of time during a collection period that a particular cell is considered yellow by CEM load because of CEM radio resource shortage in downlink (Max)

Data Source

RNC C-Node

Source Field

VS.QosDlCemLdClrYellow.Max

Source Section

FddCell

QosDlCemLdClrYellowMin

Load counter that tracks the percentage of time during a collection period that a particular cell is considered yellow by CEM load because of CEM radio resource shortage in downlink (Min)

Data Source

RNC C-Node

Source Field

VS.QosDlCemLdClrYellow.Min

Source Section

FddCell

QosDlCemLdClrYellowNbEvt

Load counter that tracks the percentage of time during a collection period that a particular cell is considered yellow by CEM load because of CEM radio resource shortage in downlink (NbEvt)

Data Source

RNC C-Node

Source Field

VS.QosDlCemLdClrYellow.NbEvt

Source Section

FddCell

QosUlCemLdClrRedAvg

Load counter that tracks the percentage of time during a collection period that a particular cell is considered red by CEM load because of CEM radio resource shortage in uplink (Avg)

© Copyright IBM Corp. 1999, 2009. All rights reserved.

Data Source

RNC C-Node

Source Field

VS.QosUlCemLdClrRed.Avg

Source Section

FddCell

QosUlCemLdClrRedCum

Load counter that tracks the percentage of time during a collection period that a particular cell is considered red by CEM load because of CEM radio resource shortage in uplink (Cum)

Data Source

RNC C-Node

Source Field

VS.QosUlCemLdClrRed.Cum

Source Section

FddCell

QosUlCemLdClrRedMax

Load counter that tracks the percentage of time during a collection period that a particular cell is considered red by CEM load because of CEM radio resource shortage in uplink (Max)

Data Source

RNC C-Node

Source Field

VS.QosUlCemLdClrRed.Max

Source Section

FddCell

QosUlCemLdClrRedMin

Load counter that tracks the percentage of time during a collection period that a particular cell is considered red by CEM load because of CEM radio resource shortage in uplink (Min)

Data Source

RNC C-Node

Source Field

VS.QosUlCemLdClrRed.Min

Source Section

FddCell

QosUlCemLdClrRedNbEvt

Load counter that tracks the percentage of time during a collection period that a particular cell is considered red by CEM load because of CEM radio resource shortage in uplink (NbEvt)

Data Source

RNC C-Node

Source Field

VS.QosUlCemLdClrRed.NbEvt

Source Section

FddCell

QosUlCemLdClrYellowAvg

Load counter that tracks the percentage of time during a collection period that a particular cell is considered yellow by CEM load because of CEM radio resource shortage in uplink (Avg)

Data Source

RNC C-Node

Source Field

VS.QosUlCemLdClrYellow.Avg

Source Section

FddCell

QosUlCemLdClrYellowCum

Load counter that tracks the percentage of time during a collection period that a particular cell is considered yellow by CEM load because of CEM radio resource shortage in uplink (Cum)

© Copyright IBM Corp. 1999, 2009. All rights reserved.

Data Source

RNC C-Node

Source Field

VS.QosUlCemLdClrYellow.Cum

Source Section

FddCell

QosUlCemLdClrYellowMax

Load counter that tracks the percentage of time during a collection period that a particular cell is considered yellow by CEM load because of CEM radio resource shortage in uplink (Max)

Data Source

RNC C-Node

Source Field

VS.QosUlCemLdClrYellow.Max

Source Section

FddCell

QosUlCemLdClrYellowMin

Load counter that tracks the percentage of time during a collection period that a particular cell is considered yellow by CEM load because of CEM radio resource shortage in uplink (Min)

Data Source

RNC C-Node

Source Field

VS.QosUlCemLdClrYellow.Min

Source Section

FddCell

QosUlCemLdClrYellowNbEvt

Load counter that tracks the percentage of time during a collection period that a particular cell is considered yellow by CEM load because of CEM radio resource shortage in uplink (NbEvt)

Data Source

RNC C-Node

Source Field

VS.QosUlCemLdClrYellow.NbEvt

Source Section

FddCell

RAB_AttEstabCS_ConvData

Succeeded by:RAB_AttEstabCS_CSD. Number of RAB Establishment Attempts for CSD

Data Source

RNC

Source Field

RAB.AttEstabCS.ConvData

Source Section

RAB Establishment Attempts

RAB_AttEstabCS_ConvVoice

Succeeded by:RAB_AttEstabCS_CSV. Number of RAB Establishment Attempts for CSV

Data Source

RNC

Source Field

RAB.AttEstabCS.ConvVoice

Source Section

RAB Establishment Attempts

RAB_AttEstabCS_CSD

Number of RAB Establishment Attempts for CSD

Data Source

RNC

© Copyright IBM Corp. 1999, 2009. All rights reserved.

Source Field

RAB.AttEstabCS.CSD

Source Section

RAB Establishment Attempts

RAB_AttEstabCS_CSV

Number of RAB Establishment Attempts for CSV

Data Source

RNC

Source Field

RAB.AttEstabCS.CSV

Source Section

RAB Establishment Attempts

RAB_AttEstabCS_CSV_RelocIratHO

Number of RAB Establishment Attempts for CSV due to relocation for an Incoming Inter-RAT GSM to UMTS Handover

Data Source

RNC

Source Field

RAB.AttEstabCS.CSV.RelocIratHO

Source Section

RAB Establishment Attempts

RAB_AttEstabPS_Bgrd

Number of RAB Establishment Attempts for PS with QoS Class Background

Data Source

RNC

Source Field

RAB.AttEstabPS.Bgrd

Source Section

RAB Establishment Attempts

RAB_AttEstabPS_DataRateGT384

Number of RAB Establishment Attempts for PS > 384

Data Source

RNC

Source Field

RAB.AttEstabPS.DataRateGT384

Source Section

RAB Establishment Attempts

RAB_AttEstabPS_DataRateGT64LE384

Number of RAB Establishment Attempts for PS data rates 64 < x <= 384 kbps

Data Source

RNC

Source Field

RAB.AttEstabPS.DataRateGT64LE384

Source Section

RAB Establishment Attempts

RAB_AttEstabPS_DataRateLE64

Number of RAB Establishment Attempts for PS data rates <= 64 kbps

Data Source

RNC

Source Field

RAB.AttEstabPS.DataRateLE64

© Copyright IBM Corp. 1999, 2009. All rights reserved.

Source Section

RAB Establishment Attempts

RAB_AttEstabPS_DCH_DCH

Number of RAB Establishment Attempts for PS data mapped on DCH transport channels in UL and DL

Data Source

RNC

Source Field

RAB.AttEstabPS.DCH_DCH

Source Section

UtranCell

RAB_AttEstabPS_DCH_HSDSCH

Number of RAB Establishment Attempts for PS data mapped on DCH/HS-DSCH transport channels

Data Source

RNC

Source Field

RAB.AttEstabPS.DCH_HSDSCH

Source Section

UtranCell

RAB_AttEstabPS_DCH_HSDSCH_Conf_DCH_DCH

Number of RAB Establishment Attempts for PS data mapped on DCH/DCH instead of DCH/HSDSCH transport channels

Data Source

RNC

Source Field

VS.RAB.AttEstabPS.DCH_HSDSCH.Conf.DCH_DCH

Source Section

UtranCell

RAB_AttEstabPS_EDCH_HSDSCH

Number of RAB Establishment Attempts for PS data mapped on EDCH/HS-DSCH transport channels

Data Source

RNC

Source Field

RAB.AttEstabPS.EDCH_HSDSCH

Source Section

UtranCell

RAB_AttEstabPS_EDCH_HSDSCH_Conf_DCH_DCH

Number of RAB Establishment Attempts for PS data finally mapped on DCH/DCH instead of EDCH/HS-DSCH transport channels

Data Source

RNC

Source Field

VS.RAB.AttEstabPS.EDCH_HSDSCH.Conf.DCH_DCH

Source Section

UtranCell

RAB_AttEstabPS_Intact

Number of RAB Establishment Attempts for PS with QoS Class Interactive

Data Source

RNC

Source Field

RAB.AttEstabPS.Intact

© Copyright IBM Corp. 1999, 2009. All rights reserved.

Source Section

RAB Establishment Attempts

RAB_AttEstabPS_Multiple

Number of Establishment Attempts for Multiple PS I/B RABs

Data Source

RNC

Source Field

VS.RAB.AttEstabPS.Multiple

Source Section

RAB Establishment Attempts

RAB_AttEstabPS_Strm

Number of RAB Establishment Attempts for PS with QoS Class Streaming

Data Source

RNC

Source Field

RAB.AttEstabPS.Strm

Source Section

RAB Establishment Attempts

RAB_AttEstPS_EDCH_HSDSCH_Conf_DCH_HSDSCH

Number of RAB Establishment Attempts for PS data mapped on DCH/HSDSCH instead of EDCH/HS-DSCH transport channels

Data Source

RNC

Source Field

VS.RAB.AttEstabPS.EDCH_HSDSCH.Conf.DCH_HSDSCH

Source Section

UtranCell

RAB_Drop_CN_Init_CS

CN Initiated Dropped RABs for CS Services

Data Source

RNC

Source Field

VS.RAB.Drop.CN_Init.CS

Source Section

UtranCell

RAB_Drop_CN_Init_PS_Cell_DCH_DCH_DCH

CN Initiated Dropped RABs for PS Services for UEs in Cell_DCH with UL/DL DCH Transport Channel

Data Source

RNC

Source Field

VS.RAB.Drop.CN_Init.PS.Cell_DCH.DCH_DCH

Source Section

UtranCell

RAB_Drop_CN_Init_PS_Cell_DCH_DCH_HSDSCH

CN Initiated Dropped RABs for PS Services for UEs in Cell_DCH with DCH/HSDSCH Transport Channel

Data Source

RNC

Source Field

VS.RAB.Drop.CN_Init.PS.Cell_DCH.DCH_HSDSCH

© Copyright IBM Corp. 1999, 2009. All rights reserved.

Source Section

UtranCell

RAB_Drop_CN_Init_PS_Cell_DCH_EDCH_HSDSCH

CN Initiated Dropped RABs for PS Services for UEs in Cell_DCH with EDCH/HSDSCH

Data Source

RNC

Source Field

VS.RAB.Drop.CN_Init.PS.Cell_DCH.EDCH_HSDSCH

Source Section

UtranCell

RAB_Drop_CN_Init_PS_Cell_FACH

CN Initiated Dropped RABs for PS Services for UEs in Cell_FACH

Data Source

RNC

Source Field

VS.RAB.Drop.CN_Init.PS.Cell_FACH

Source Section

UtranCell

RAB_Drop_CN_Init_PS_URA_PCH

CN Initiated Dropped RABs for PS Services for UEs in URA_PCH

Data Source

RNC

Source Field

VS.RAB.Drop.CN_Init.PS.URA_PCH

Source Section

UtranCell

RAB_Drop_CS_CodecChange

Dropped CS RABs during AMR Codec Change due to IU Rate Control Failure

Data Source

RNC

Source Field

VS.RAB.Drop.CS.CodecChange

Source Section

Dropped RABs

RAB_Drop_CS_DL_RLF

Number of Dropped CS RABs caused by Downlink Radio Link Failure

Data Source

RNC

Source Field

VS.RAB.Drop.CS.DL_RLF

Source Section

Dropped RABs

RAB_Drop_CS_DLPwr

Number of Dropped CS RABs due to DL Power (DL Load)

Data Source

RNC

Source Field

VS.RAB.Drop.CS.DLPwr

Source Section

Dropped RABs

RAB_Drop_CS_DLRLCFail_DCCH

Number of Dropped CS RAB Connections due to DL RLC failure on DCCH (RNC detected)

© Copyright IBM Corp. 1999, 2009. All rights reserved.

Data Source

RNC

Source Field

VS.RAB.Drop.CS.DLRLCFail.DCCH

Source Section

UtranCell

RAB_Drop_CS_InterFreqHHO

Number of dropped CS RABs due to Inter-frequency Hard Handover

Data Source

RNC

Source Field

VS.RAB.Drop.CS.InterFreqHHO

Source Section

Dropped RABs

RAB_Drop_CS_RelocUEInvol

Number of Dropped CS RABs due to SRNS relocation UE Involved

Data Source

RNC

Source Field

VS.RAB.Drop.CS.RelocUEInvol

Source Section

Dropped RABs

RAB_Drop_CS_ULIntfer

Number of Dropped CS RABs due to UL Interference (UL Load)

Data Source

RNC

Source Field

VS.RAB.Drop.CS.ULIntfer

Source Section

Dropped RABs

RAB_Drop_CS_ULRLCFail_DCCH

Number of Dropped CS RAB Connections due to UL RLC failure on DCCH (UE detected)

Data Source

RNC

Source Field

VS.RAB.Drop.CS.ULRLCFail.DCCH

Source Section

UtranCell

RAB_Drop_CSD

Total Number of Dropped RABs for CS Data

Data Source

RNC

Source Field

VS.RAB.Drop.CSD

Source Section

Dropped RABs

RAB_Drop_CSD_CauseULRLF

Number of Dropped CS Data RABs caused by Uplink Radio Link Failure due to loss of Synchronisation

Data Source

RNC

© Copyright IBM Corp. 1999, 2009. All rights reserved.

Source Field

VS.RAB.Drop.CSD.CauseULRLF

Source Section

Dropped RABs

RAB_Drop_CSV

Total Number of Dropped RABs for CS Voice

Data Source

RNC

Source Field

VS.RAB.Drop.CSV

Source Section

Dropped RABs

RAB_Drop_CSV_CauseULRLF

Number of Dropped CS Voice RABs caused by Uplink Radio Link Failure due to Loss of Synchronisation

Data Source

RNC

Source Field

VS.RAB.Drop.CSV.CauseULRLF

Source Section

Dropped RABs

RAB_Drop_OpInterv

Number of Dropped RABs due to operator intervention

Data Source

RNC

Source Field

VS.RAB.Drop.OpInterv

Source Section

Dropped RABs

RAB_Drop_PS_Cell_DCH

Number of Dropped RABs for PS Data for UEs in Cell_DCH

Data Source

RNC

Source Field

VS.RAB.Drop.PS.Cell_DCH

Source Section

Dropped RABs

RAB_Drop_PS_Cell_DCH_DCH_DCH

Number of Dropped RABs for PS Data for UEs in Cell_DCH with RAB on UL/DL DCH transport channels

Data Source

RNC

Source Field

VS.RAB.Drop.PS.Cell_DCH.DCH_DCH

Source Section

UtranCell

RAB_Drop_PS_Cell_DCH_DCH_HSDSCH

Number of Dropped RABs for PS Data for UEs in Cell_DCH with RAB on UL/DL DCH/ HSDSCH transport channels

Data Source

RNC

© Copyright IBM Corp. 1999, 2009. All rights reserved.

Source Field

VS.RAB.Drop.PS.Cell_DCH.DCH_HSDSCH

Source Section

UtranCell

RAB_Drop_PS_Cell_DCH_EDCH_HSDSCH

Number of Dropped RABs for PS Data for UEs in Cell_DCH with RAB on UL/DL EDCH/ HSDSCH transport channels

Data Source

RNC

Source Field

VS.RAB.Drop.PS.Cell_DCH.EDCH_HSDSCH

Source Section

UtranCell

RAB_Drop_PS_Cell_FACH

Number of Dropped RABs for PS Data for UEs in Cell_FACH

Data Source

RNC

Source Field

VS.RAB.Drop.PS.Cell_FACH

Source Section

Dropped RABs

RAB_Drop_PS_DCH_CauseULRLF

Number of Dropped PS RABs mapped onto a DCH Transport Channel caused by Uplink Radio Link Failure due to loss of synchronisation

Data Source

RNC

Source Field

VS.RAB.Drop.PS.DCH.CauseULRLF

Source Section

Dropped RABs

RAB_Drop_PS_DL_RLF

Number of Dropped PS RABs caused by Downlink Radio Link Failure

Data Source

RNC

Source Field

VS.RAB.Drop.PS.DL_RLF

Source Section

Dropped RABs

RAB_Drop_PS_DLPwr

Number of Dropped PS RABs due to DL Power (DL Load)

Data Source

RNC

Source Field

VS.RAB.Drop.PS.DLPwr

Source Section

Dropped RABs

RAB_Drop_PS_DLRLCFail_DCCH

Number of Dropped PS RAB Connections due to DL RLC failure on DCCH (RNC detected)

Data Source

RNC

Source Field

VS.RAB.Drop.PS.DLRLCFail.DCCH

© Copyright IBM Corp. 1999, 2009. All rights reserved.

Source Section

UtranCell

RAB_Drop_PS_DLRLCFail_DTCH

Number of Dropped PS RAB Connections due to DL RLC failure on DTCH (RNC detected)

Data Source

RNC

Source Field

VS.RAB.Drop.PS.DLRLCFail.DTCH

Source Section

UtranCell

RAB_Drop_PS_HSDSCH_CauseULRLF

Number of Dropped PS RABs mapped onto a HS-DSCH Transport Channel caused by Uplink Radio Link Failure due to loss of synchronisation

Data Source

RNC

Source Field

VS.RAB.Drop.PS.HSDSCH.CauseULRLF

Source Section

Dropped RABs

RAB_Drop_PS_HSDSCH_CauseULRLF_ReconfFail

Number of Dropped PS RABs mapped to HS-DSCH caused by unsuccessful reconfiguration from HS_DSCH to DCH following RLF (loss of synchronisation)

Data Source

RNC

Source Field

VS.RAB.Drop.PS.HSDSCH.CauseULRLF.ReconfFail

Source Section

Dropped RABs

RAB_Drop_PS_InterFreqHHO

Number of dropped PS RABs due to Inter-frequency Hard Handover

Data Source

RNC

Source Field

VS.RAB.Drop.PS.InterFreqHHO

Source Section

Dropped RABs

RAB_Drop_PS_MPDPNotSup

Number of dropped RAB connections for service type PS when multiple PDP contexts exist and the RNC triggers a RAB Release Request due to normal Radio Resource Management reasons.

Data Source

RNC

Source Field

VS.RAB.Drop.PS.MPDPNotSup

Source Section

Dropped RABs

RAB_Drop_PS_RelocUEInvol

Number of Dropped PS RABs due to SRNS relocation UE Involved

Data Source

RNC

Source Field

VS.RAB.Drop.PS.RelocUEInvol

© Copyright IBM Corp. 1999, 2009. All rights reserved.

Source Section

Dropped RABs

RAB_Drop_PS_ULIntfer

Number of Dropped PS RABs due to UL Interference (UL Load)

Data Source

RNC

Source Field

VS.RAB.Drop.PS.ULIntfer

Source Section

Dropped RABs

RAB_Drop_PS_ULRLCFail_DCCH

Number of Dropped PS RAB Connections due to UL RLC failure on DCCH (UE detected)

Data Source

RNC

Source Field

VS.RAB.Drop.PS.ULRLCFail.DCCH

Source Section

UtranCell

RAB_Drop_PS_ULRLCFail_DTCH

Number of Dropped PS RAB Connections due to UL RLC failure on DTCH (UE detected)

Data Source

RNC

Source Field

VS.RAB.Drop.PS.ULRLCFail.DTCH

Source Section

UtranCell

RAB_Drop_PS_URA_PCH

Number of Dropped RABs for PS Data for UEs in URA_PCH

Data Source

RNC

Source Field

VS.RAB.Drop.PS.URA_PCH

Source Section

Dropped RABs

RAB_Drop_Reconf_DCH_HSDSCH

Number of Dropped PS RAB Connections during DCH to HS-DSCH

Data Source

RNC

Source Field

VS.RAB.Drop.Reconf.DCH_HSDSCH

Source Section

UtranCell

RAB_Drop_Reconf_HSDSCH_DCH

Number of Dropped PS RAB Connections during HS-DSCH to DCH

Data Source

RNC

Source Field

VS.RAB.Drop.Reconf.HSDSCH_DCH

Source Section

UtranCell

RAB_Drop_UEInactivity

Number of Dropped RABs due to UE inactivity

© Copyright IBM Corp. 1999, 2009. All rights reserved.

Data Source

RNC

Source Field

VS.RAB.Drop.UEInactivity

Source Section

Dropped RABs

RAB_Drop_UESigConnRel

Number of Dropped RABs due to a release of the signalling connection by the UE

Data Source

RNC

Source Field

VS.RAB.Drop.UESigConnRel

Source Section

Dropped RABs

RAB_FailEstabCSNoQueuing_CodeStarv

Number of CS RAB Establishment Failures due to Code Starvation

Data Source

RNC

Source Field

RAB.FailEstabCSNoQueuing.CodeStarv

Source Section

RAB Establishment Failures

RAB_FailEstabCSNoQueuing_ConvData

Succeeded by:RAB_FailEstabCSNoQueuing_CSD. RAB Establishment Failures - no Queuing - for CSD

Data Source

RNC

Source Field

RAB.FailEstabCSNoQueuing.ConvData

Source Section

RAB Establishment Failures

RAB_FailEstabCSNoQueuing_ConvVoice

Succeeded by:RAB_FailEstabCSNoQueuing_CSV. RAB Establishment Failures - no Queuing - for CSV

Data Source

RNC

Source Field

RAB.FailEstabCSNoQueuing.ConvVoice

Source Section

RAB Establishment Failures

RAB_FailEstabCSNoQueuing_CSD

RAB Establishment Failures - no Queuing - for CSD

Data Source

RNC

Source Field

RAB.FailEstabCSNoQueuing.CSD

Source Section

RAB Establishment Failures

RAB_FailEstabCSNoQueuing_CSV

RAB Establishment Failures - no Queuing - for CSV

© Copyright IBM Corp. 1999, 2009. All rights reserved.

Data Source

RNC

Source Field

RAB.FailEstabCSNoQueuing.CSV

Source Section

RAB Establishment Failures

RAB_FailEstabCSNoQueuing_CSV_RelocIratHO

RAB Establishment Failures - no Queuing - for CSV due to relocation for an Incoming Inter-RAT GSM to UMTS Handover

Data Source

RNC

Source Field

RAB.FailEstabCSNoQueuing.CSV.RelocIratHO

Source Section

RAB Establishment Failures

RAB_FailEstabCSNoQueuing_DLPwr

Number of CS RAB Establishment Failures due to DL Power (DL Load)

Data Source

RNC

Source Field

RAB.FailEstabCSNoQueuing.DLPwr

Source Section

RAB Establishment Failures

RAB_FailEstabCSNoQueuing_RBSetupFail

Number of CS RAB Establishment Failures due to RB Setup Failure

Data Source

RNC

Source Field

RAB.FailEstabCSNoQueuing.RBSetupFail

Source Section

RAB Establishment Failures

RAB_FailEstabCSNoQueuing_RLReconfigFail

CS RAB Establishment Failures due to RL Reconfiguration Failure - excluding NodeB Errors

Data Source

RNC

Source Field

RAB.FailEstabCSNoQueuing.RLReconfigFail

Source Section

UtranCell

RAB_FailEstabCSNoQueuing_T3exp

Number of CS RAB Establishment Failures due to Timer T3 Expiry

Data Source

RNC

Source Field

RAB.FailEstabCSNoQueuing.T3exp

Source Section

RAB Establishment Failures

RAB_FailEstabCSNoQueuing_ULIntfer

Number of CS RAB Establishment Failures due to UL interference (UL load)

Data Source

RNC

© Copyright IBM Corp. 1999, 2009. All rights reserved.

Source Field

RAB.FailEstabCSNoQueuing.ULIntfer

Source Section

RAB Establishment Failures

RAB_FailEstabPS_HSDPA_UE

Number of Call Setup failures for an HSDPA capable UE

Data Source

RNC

Source Field

RAB.FailEstabPS.HSDPA_UE

Source Section

HSDPA resource related Performance Measurements

RAB_FailEstabPSNoQue_DataRateGT64LE384

Number of RAB Establishment Failures for PS data rates 64<x<=384 kbps

Data Source

RNC

Source Field

RAB.FailEstabPSNoQueuing.DataRateGT64LE384

Source Section

RAB Establishment Failures

RAB_FailEstabPSNoQue_nonHSDPA_ReqGT384

Number of PS RAB Establishment Failures due to Data Rate Exceeding non-HSDPA UE Capability

Data Source

RNC

Source Field

RAB.FailEstabPSNoQueuing.nonHSDPA_UE_ReqGT384

Source Section

RAB Establishment Failures

RAB_FailEstabPSNoQueuing_Bgrd

RAB Establishment Failures - no Queuing - for PS RAB with QoS Class Background

Data Source

RNC

Source Field

RAB.FailEstabPSNoQueuing.Bgrd

Source Section

RAB Establishment Failures

RAB_FailEstabPSNoQueuing_CodeStarv

Number of PS RAB Establishment Failures due to Code Starvation

Data Source

RNC

Source Field

RAB.FailEstabPSNoQueuing.CodeStarv

Source Section

RAB Establishment Failures

RAB_FailEstabPSNoQueuing_DataRateGT384

Number of RAB Establishment Failures for PS > 384 kbps

Data Source

RNC

Source Field

RAB.FailEstabPSNoQueuing.DataRateGT384

© Copyright IBM Corp. 1999, 2009. All rights reserved.

Source Section

RAB Establishment Failures

RAB_FailEstabPSNoQueuing_DataRateLE64

Number of RAB Establishment Failures for PS data rates <= 64 kbps

Data Source

RNC

Source Field

RAB.FailEstabPSNoQueuing.DataRateLE64

Source Section

RAB Establishment Failures

RAB_FailEstabPSNoQueuing_DLPwr

Number of PS RAB Establishment Failures due to DL Power (DL Load)

Data Source

RNC

Source Field

RAB.FailEstabPSNoQueuing.DLPwr

Source Section

RAB Establishment Failures

RAB_FailEstabPSNoQueuing_Intact

RAB Establishment Failures - no Queuing - for PS RAB with QoS Class Interactive

Data Source

RNC

Source Field

RAB.FailEstabPSNoQueuing.Intact

Source Section

RAB Establishment Failures

RAB_FailEstabPSNoQueuing_RBSetupFail

Number of PS RAB Establishment Failures due to RB Setup Failure

Data Source

RNC

Source Field

RAB.FailEstabPSNoQueuing.RBSetupFail

Source Section

RAB Establishment Failures

RAB_FailEstabPSNoQueuing_RLReconfigFail

PS RAB Establishment Failures due to RL Reconfiguration Failure - excluding NodeB Errors

Data Source

RNC

Source Field

RAB.FailEstabPSNoQueuing.RLReconfigFail

Source Section

UtranCell

RAB_FailEstabPSNoQueuing_ServComb

Number of PS RAB Establishment Failures due to Lack of Service Combination Support

Data Source

RNC

Source Field

RAB.FailEstabPSNoQueuing.ServComb

Source Section

RAB Establishment Failures

RAB_FailEstabPSNoQueuing_Strm

Number of RAB Establishment Failures for PS RAB with QoS Class Streaming

© Copyright IBM Corp. 1999, 2009. All rights reserved.

Data Source

RNC

Source Field

RAB.FailEstabPSNoQueuing.Strm

Source Section

RAB Establishment Failures

RAB_FailEstabPSNoQueuing_StrmNoBitrate

Number of PS RAB Establishment Failures for QoS Class Streaming - Requested Guaranteed Bit Rate Not Available

Data Source

RNC

Source Field

RAB.FailEstabPSNoQueuing.StrmNoBitrate

Source Section

RAB Establishment Failures

RAB_FailEstabPSNoQueuing_T3exp

Number of PS RAB Establishment Failures due to Timer T3 Expiry

Data Source

RNC

Source Field

RAB.FailEstabPSNoQueuing.T3exp

Source Section

RAB Establishment Failures

RAB_FailEstabPSNoQueuing_T3exp_DCH_DCH

Number of PS RAB Establishment Failures due to Timer T3 Expiry mapped on DCH transport channels in UL and DL

Data Source

RNC

Source Field

RAB.FailEstabPSNoQueuing.T3exp.DCH_DCH

Source Section

UtranCell

RAB_FailEstabPSNoQueuing_ULIntfer

Number of PS RAB Establishment Failures due to UL interference (UL load)

Data Source

RNC

Source Field

RAB.FailEstabPSNoQueuing.ULIntfer

Source Section

RAB Establishment Failures

RAB_FailEstCSNoQue_RLReconfFail_NodeBErr

CS RAB Establishment Failures due to RL Reconfiguration Failure caused by NodeB Errors

Data Source

RNC

Source Field

RAB.FailEstabCSNoQueuing.RLReconfFail.NodeBErr

Source Section

UtranCell

RAB_FailEstPSNoQue_RLReconfFail_NodeBErr

PS RAB Establishment Failures due to RL Reconfiguration Failure caused by NodeB Errors

Data Source

RNC

© Copyright IBM Corp. 1999, 2009. All rights reserved.

Source Field

RAB.FailEstabPSNoQueuing.RLReconfFail.NodeBErr

Source Section

UtranCell

RAB_FailEstPSNoQueuing_T3exp_DCH_HSDSCH

Number of PS RAB Establishment Failures due to Timer T3 Expiry mapped on DCH/HSDCH transport channels in UL and DL

Data Source

RNC

Source Field

RAB.FailEstabPSNoQueuing.T3exp.DCH_HSDSCH

Source Section

UtranCell

RAB_FailEstPSNoQueuing_T3exp_EDCH_HSDSCH

Number of PS RAB Establishment Failures due to Timer T3 Expiry mapped on EDCH/HS-DSCH transport channels in UL and DL

Data Source

RNC

Source Field

RAB.FailEstabPSNoQueuing.T3exp.EDCH_HSDSCH

Source Section

UtranCell

RAB_MeanCellDCH_Bgrd_DCH

Mean number of PS RABs in Cell_DCH with QoS class Background mapped on DCH

Data Source

RNC

Source Field

VS.RAB.MeanCellDCH.Bgrd.DCH

Source Section

Mean number of RABs

RAB_MeanCellDCH_Bgrd_DCH_HSDSCH

Mean number of PS RABs in Cell_DCH with QoS class 'Background' mapped on DCH / HS-DSCH

Data Source

RNC

Source Field

VS.RAB.MeanCellDCH.Bgrd.DCH_HSDSCH

Source Section

UtranCell

RAB_MeanCellDCH_Bgrd_EDCH_HSDSCH

Mean number of PS RABs in Cell_DCH with QoS class 'Background' mapped on E-DCH/HS-DSCH

Data Source

RNC

Source Field

VS.RAB.MeanCellDCH.Bgrd.EDCH_HSDSCH

Source Section

UtranCell

RAB_MeanCellDCH_Bgrd_HSDSCH

Renamed 4.3.7.0.10 - new name:RAB_MeanCellDCH_Bgrd_DCH_HSDSCH. Mean number of PS RABs in Cell_DCH with QoS class Background mapped on HS-DSCH

Data Source

RNC

© Copyright IBM Corp. 1999, 2009. All rights reserved.

Source Field

VS.RAB.MeanCellDCH.Bgrd.HSDSCH

Source Section

Mean number of RABs

RAB_MeanCellDCH_CompMode

Mean Number of RABs in Compressed Mode

Data Source

RNC

Source Field

VS.RAB.MeanCellDCH.CompMode

Source Section

Compressed Mode Performance Measurements

RAB_MeanCellDCH_CSD

Mean Number of Active RABs for Service Type CSD

Data Source

RNC

Source Field

VS.RAB.MeanCellDCH.CSD

Source Section

Mean number of RABs

RAB_MeanCellDCH_CSD_sum

Mean Number of Active RABs for Service Type CSD. This peg provides Sum aggregation for the NumActRABMean.CSD measurement

Data Source

RNC

Source Field

VS.RAB.MeanCellDCH.CSD

Source Section

Mean number of RABs

RAB_MeanCellDCH_CSV

Mean number of active RABs for Service Type CSV

Data Source

RNC

Source Field

VS.RAB.MeanCellDCH.CSV

Source Section

Mean number of RABs

RAB_MeanCellDCH_CSV_sum

Mean number of active RABs for Service Type CSV. This peg provides Sum aggregation for the NumActRABMean.CSV12 measurement

Data Source

RNC

Source Field

VS.RAB.MeanCellDCH.CSV

Source Section

Mean number of RABs

RAB_MeanCellDCH_DCHLackHSDPARsrc

Mean Number of HSDPA UEs allocated on DCH instead of HS-DSCH due to lack of resources

Data Source

RNC

© Copyright IBM Corp. 1999, 2009. All rights reserved.

Source Field

VS.RAB.MeanCellDCH.DCHLackHSDPARsrc

Source Section

HSDPA resource related Performance Measurements

RAB_MeanCellDCH_HS_DSCH

Mean Number of HSDPA UEs allocated on HS-DSCH

Data Source

RNC

Source Field

VS.RAB.MeanCellDCH.HS-DSCH

Source Section

HSDPA resource related Performance Measurements

RAB_MeanCellDCH_Intact_DCH

Mean number of PS RABs in Cell_DCH with QoS class Interactive mapped on DCH

Data Source

RNC

Source Field

VS.RAB.MeanCellDCH.Intact.DCH

Source Section

Mean number of RABs

RAB_MeanCellDCH_Intact_DCH_HSDSCH

Mean number of PS RABs in Cell_DCH with QoS class 'Interactive' mapped on DCH / HS-DSCH

Data Source

RNC

Source Field

VS.RAB.MeanCellDCH.Intact.DCH_HSDSCH

Source Section

UtranCell

RAB_MeanCellDCH_Intact_EDCH_HSDSCH

Mean number of PS RABs in Cell_DCH with QoS class 'Interactive' mapped on E-DCH / HS-DSCH

Data Source

RNC

Source Field

VS.RAB.MeanCellDCH.Intact.EDCH_HSDSCH

Source Section

UtranCell

RAB_MeanCellDCH_Intact_HSDSCH

Renamed 4.3.7.0.10 - new name:RAB_MeanCellDCH_Intact_DCH_HSDSCH. Mean number of PS RABs in Cell_DCH with QoS class Interactive mapped on HS-DSCH

Data Source

RNC

Source Field

VS.RAB.MeanCellDCH.Intact.HSDSCH

Source Section

Mean number of RABs

RAB_MeanCellDCH_OneIBOneS_DCH_HSDSCH

This measurement provides the mean number of connections with the UE in Cell_DCH with one I/B RAB and one Streaming RAB mapped to HSDPA/DCH.

Data Source

RNC

© Copyright IBM Corp. 1999, 2009. All rights reserved.

Source Field

VS.RAB.MeanCellDCH.OneIBOneS.DCH_HSDSCH

Source Section

RAB Mean Cell DCH

RAB_MeanCellDCH_PS0DLUL

Mean number of RABs in Cell_DCH for Service Type PS 0/0 kbps DL/UL

Data Source

RNC

Source Field

VS.RAB.MeanCellDCH.PS0DLUL

Source Section

UtranCell

RAB_MeanCellDCH_PS128DL

Mean number of RABs in Cell_DCH for Service Type PS 128 kbps DL

Data Source

RNC

Source Field

VS.RAB.MeanCellDCH.PS128DL

Source Section

Mean number of RABs

RAB_MeanCellDCH_PS128UL

Mean number of RABs in Cell_DCH for Service Type PS 128 kbps UL

Data Source

RNC

Source Field

VS.RAB.MeanCellDCH.PS128UL

Source Section

Mean number of RABs

RAB_MeanCellDCH_PS16DL

Mean number of RABs in Cell_DCH for Service Type PS 16 kbps DL

Data Source

RNC

Source Field

VS.RAB.MeanCellDCH.PS16DL

Source Section

Mean number of RABs

RAB_MeanCellDCH_PS16UL

Mean number of RABs in Cell_DCH for Service Type PS 16 kbps UL

Data Source

RNC

Source Field

VS.RAB.MeanCellDCH.PS16UL

Source Section

Mean number of RABs

RAB_MeanCellDCH_PS32DL

Mean number of RABs in Cell_DCH for Service Type PS 32 kbps DL

Data Source

RNC

Source Field

VS.RAB.MeanCellDCH.PS32DL

Source Section

Mean number of RABs

© Copyright IBM Corp. 1999, 2009. All rights reserved.

RAB_MeanCellDCH_PS32UL

Mean number of RABs in Cell_DCH for Service Type PS 32 kbps UL

Data Source

RNC

Source Field

VS.RAB.MeanCellDCH.PS32UL

Source Section

Mean number of RABs

RAB_MeanCellDCH_PS384DL

Mean number of RABs in Cell_DCH for Service Type PS 384 kbps DL

Data Source

RNC

Source Field

VS.RAB.MeanCellDCH.PS384DL

Source Section

Mean number of RABs

RAB_MeanCellDCH_PS384UL

Mean number of RABs in Cell_DCH for Service Type PS 384 kbps UL

Data Source

RNC

Source Field

VS.RAB.MeanCellDCH.PS384UL

Source Section

Mean number of RABs

RAB_MeanCellDCH_PS64DL

Mean number of RABs in Cell_DCH for Service Type PS 64 kbps DL

Data Source

RNC

Source Field

VS.RAB.MeanCellDCH.PS64DL

Source Section

Mean number of RABs

RAB_MeanCellDCH_PS64UL

Mean number of RABs in Cell_DCH for Service Type PS 64 kbps UL

Data Source

RNC

Source Field

VS.RAB.MeanCellDCH.PS64UL

Source Section

Mean number of RABs

RAB_MeanCellDCH_PS8DL

Mean number of RABs in Cell_DCH for Service Type PS 8 kbps DL

Data Source

RNC

Source Field

VS.RAB.MeanCellDCH.PS8DL

Source Section

Mean number of RABs

RAB_MeanCellDCH_PS8UL

Mean number of RABs in Cell_DCH for Service Type PS 8 kbps UL

Data Source

RNC

© Copyright IBM Corp. 1999, 2009. All rights reserved.

Source Field

VS.RAB.MeanCellDCH.PS8UL

Source Section

Mean number of RABs

RAB_MeanCellDCH_Strm_DCH

Mean number of PS RABs in Cell_DCH with QoS Class Streaming mapped on DCH

Data Source

RNC

Source Field

VS.RAB.MeanCellDCH.Strm.DCH

Source Section

Mean number of RABs

RAB_MeanCellDCH_ThreeIB_DCH_DCH

This measurement provides the mean number of connections with the UE in Cell_DCH with three I/B RABs mapped to DCH/DCH.

Data Source

RNC

Source Field

VS.RAB.MeanCellDCH.ThreeIB.DCH_DCH

Source Section

RAB Mean Cell DCH

RAB_MeanCellDCH_ThreeIB_DCH_HSDSCH

This measurement provides the mean number of connections with the UE in Cell_DCH with three I/B RABs mapped to HSDPA/DCH.

Data Source

RNC

Source Field

VS.RAB.MeanCellDCH.ThreeIB.DCH_HSDSCH

Source Section

RAB Mean Cell DCH

RAB_MeanCellDCH_TwoIB_DCH_DCH

This measurement provides the mean number of connections with the UE in Cell_DCH with two I/B RABs mapped to DCH/DCH.

Data Source

RNC

Source Field

VS.RAB.MeanCellDCH.TwoIB.DCH_DCH

Source Section

RAB Mean Cell DCH

RAB_MeanCellDCH_TwoIB_DCH_HSDSCH

This measurement provides the mean number of connections with the UE in Cell_DCH with two I/B RABs mapped to HSDPA/DCH.

Data Source

RNC

Source Field

VS.RAB.MeanCellDCH.TwoIB.DCH_HSDSCH

Source Section

RAB Mean Cell DCH

RAB_MeanCellDCH_TwoIBOneS_DCH_DCH

This measurement provides the mean number of connections with the UE in Cell_DCH with two I/B RABs mapped to DCH/DCH.

Data Source

RNC

© Copyright IBM Corp. 1999, 2009. All rights reserved.

Source Field

VS.RAB.MeanCellDCH.TwoIBOneS.DCH_DCH

Source Section

RAB Mean Cell DCH

RAB_MeanCellDCH_TwoIBOneS_DCH_HSDSCH

This measurement provides the mean number of connections with the UE in Cell_DCH with two I/B RABs and one Streaming RAB mapped to HSDPA/DCH.

Data Source

RNC

Source Field

VS.RAB.MeanCellDCH.TwoIBOneS.DCH_HSDSCH

Source Section

RAB Mean Cell DCH

RAB_MeanCellDCH_ULDCH336_DLHSDSCH656

This measurement provides the mean number of PS RABs with UE being in Cell_DCH mapped on DCH / HS-DSCH transport channels with an RLC PDU size of 336 for UL and 656 bit for DL.

Data Source

RNC

Source Field

VS.RAB.MeanCellDCH.ULDCH336_DLHSDSCH656

Source Section

RAB Mean Cell DCH

RAB_MeanCellDCH_ULEDCH336_DLHSDSCH656

This measurement provides the mean number of PS RABs with UE being in Cell_DCH mapped on E-DCH / HS-DSCH transport channels with an RLC PDU size of 336 for UL and 656 bit for DL.

Data Source

RNC

Source Field

VS.RAB.MeanCellDCH.ULEDCH336_DLHSDSCH656

Source Section

RAB Mean Cell DCH

RAB_MeanCellFACH

Mean number of PS RABs in Cell_FACH

Data Source

RNC

Source Field

VS.RAB.MeanCellFACH

Source Section

UtranCell

RAB_NegotAllow_PS_Int_Bgrd_RelocResAlloc

Number of Allowed RAB Negotiations for PS data with QoS class 'Interactive/Background' - Relocation Resource Allocation Procedure

Data Source

RNC

Source Field

VS.RAB.NegotAllowed.PS.Intact_Bgrd.RelocResAlloc

Source Section

UtranCell

RAB_NegotAllow_PS_Intact_Bgrd_RABAssign

Number of Allowed RAB Negotiations for PS data with QoS class 'Interactive/Background' - RAB Assignment Procedure

© Copyright IBM Corp. 1999, 2009. All rights reserved.

Data Source

RNC

Source Field

VS.RAB.NegotAllowed.PS.Intact_Bgrd.RABAssign

Source Section

UtranCell

RAB_NegotAllowed_PS_Strm

Number of Allowed RAB Negotiations for PS data with QoS class 'Streaming'

Data Source

RNC

Source Field

VS.RAB.NegotAllowed.PS.Strm

Source Section

UtranCell

RAB_NegotAppl_PS_Int_Bgrd_RelocResAlloc

Number of Applied RAB Negotiations for PS data with QoS class 'Interactive/Background' - Relocation Resource Allocation Procedure

Data Source

RNC

Source Field

VS.RAB.NegotAppl.PS.Intact_Bgrd.RelocResAlloc

Source Section

UtranCell

RAB_NegotAppl_PS_Intact_Bgrd_RABAssign

Number of Applied RAB Negotiations for PS data with QoS class 'Interactive/Background' - RAB Assignment Procedure

Data Source

RNC

Source Field

VS.RAB.NegotAppl.PS.Intact_Bgrd.RABAssign

Source Section

UtranCell

RAB_NegotAppl_PS_Strm

Number of Applied RAB Negotiations for PS data with QoS class 'Streaming'

Data Source

RNC

Source Field

VS.RAB.NegotAppl.PS.Strm

Source Section

UtranCell

RAB_Rel_Drop_sum

Total Number of Dropped RABs

Data Source

RNC

Source Field

RAB.Rel.Drop.sum

Source Section

Number of Dropped RABs

RAB_RelCS_Data_CauseRLF

Succeeded by:RAB_Drop_CSD_CauseULRLF. Number of Dropped RABs due to Radio Link Failure for CS Data

© Copyright IBM Corp. 1999, 2009. All rights reserved.

Data Source

RNC

Source Field

RAB.RelCS.Data.CauseRLF

Source Section

Number of Dropped RABs

RAB_RelCS_Data_CauseRLF_Adjusted

Adjusted number of Dropped RABs due to Radio Link Failure for CS Data. It is the number of dropped CSD RABs (due to RL Failure) multiplied by a factor comprising of "RAB.Rel.Drop.sum / (RAB.RelCS.Voice.CauseRLF + RAB.RelCS.Data.CauseRLF + RAB.RelPS.DCH.CauseRLF + RAB.RelPS.HSDSCH.CauseRLF + RAB.RelPS.HSDSCH.CauseRLF.ReconfFail)".

Data Source

RNC

Source Field

RAB.RelCS.Data.CauseRLF * RAB.Rel.Drop.sum * 1.0 / vsum (RAB.RelCS.Voice.CauseRLF, RAB.RelCS.Data.CauseRLF, RAB.RelPS.DCH.CauseRLF, RAB.RelPS.HSDSCH.CauseRLF, RAB.RelPS.HSDSCH.CauseRLF.ReconfFail)

Source Section

Number of Dropped RABs

RAB_RelCS_Voice_CauseRLF

Succeeded by:RAB_Drop_CSV_CauseULRLF. Number of Dropped RABs due to Radio Link Failure for CSV

Data Source

RNC

Source Field

RAB.RelCS.Voice.CauseRLF

Source Section

Number of Dropped RABs

RAB_RelCS_Voice_CauseRLF_Adjusted

Adjusted number of Dropped RABs due to Radio Link Failure for CS Voice. It is the number of dropped CSV RABs (due to RL Failure) multiplied by a factor comprising of "RAB.Rel.Drop.sum / (RAB.RelCS.Voice.CauseRLF + RAB.RelCS.Data.CauseRLF + RAB.RelPS.DCH.CauseRLF + RAB.RelPS.HSDSCH.CauseRLF + RAB.RelPS.HSDSCH.CauseRLF.ReconfFail)".

Data Source

RNC

Source Field

RAB.RelCS.Voice.CauseRLF * RAB.Rel.Drop.sum * 1.0 / vsum (RAB.RelCS.Voice.CauseRLF, RAB.RelCS.Data.CauseRLF, RAB.RelPS.DCH.CauseRLF, RAB.RelPS.HSDSCH.CauseRLF, RAB.RelPS.HSDSCH.CauseRLF.ReconfFail)

Source Section

Number of Dropped RABs

RAB_RelPS_CauseCong

Number of Dropped RABs due to Congestion

Data Source

RNC

Source Field

RAB.RelPS.CauseCong

Source Section

Number of Dropped RABs

RAB_RelPS_CauseRLF_Adjusted

Adjusted number of Dropped RABs due to Radio Link Failure for PS. It is the number of dropped PS RABs (due to RL Failure) multiplied by a factor comprising of "RAB.Rel.Drop.sum / (RAB.RelCS.Voice.CauseRLF + RAB.RelCS.Data.CauseRLF + RAB.RelPS.DCH.CauseRLF + RAB.RelPS.HSDSCH.CauseRLF + RAB.RelPS.HSDSCH.CauseRLF.ReconfFail)".

Data Source

RNC

© Copyright IBM Corp. 1999, 2009. All rights reserved.

Source Field

vsum (RAB.RelPS.DCH.CauseRLF, RAB.RelPS.HSDSCH.CauseRLF, RAB.RelPS.HSDSCH.CauseRLF.ReconfFail) * RAB.Rel.Drop.sum * 1.0 / vsum (RAB.RelCS.Voice.CauseRLF, RAB.RelCS.Data.CauseRLF, RAB.RelPS.DCH.CauseRLF, RAB.RelPS.HSDSCH.CauseRLF, RAB.RelPS.HSDSCH.CauseRLF.ReconfFail)

Source Section

Number of Dropped RABs

RAB_RelPS_DCH_CauseRLF

Succeeded by:RAB_Drop_PS_DCH_CauseULRLF. Number of Dropped PS RABs mapped to a DCH caused by RLF

Data Source

RNC

Source Field

RAB.RelPS.DCH.CauseRLF

Source Section

Number of Dropped RABs

RAB_RelPS_HSDSCH_CauseRLF

Succeeded by:RAB_Drop_PS_HSDSCH_CauseULRLF. Number of Dropped PS RABs mapped to HS-DSCH caused by RLF due to loss of synchronisation

Data Source

RNC

Source Field

RAB.RelPS.HSDSCH.CauseRLF

Source Section

Number of Dropped RABs

RAB_SuccEstabCSNoQueuing_CSD

Number of Successful RAB Establishments for CSD with no queuing process

Data Source

RNC

Source Field

RAB.SuccEstabCSNoQueuing.CSD

Source Section

Successful RAB Establishments

RAB_SuccEstabCSNoQueuing_CSV

Number of Successful RAB Establishments for CSV with no queuing process

Data Source

RNC

Source Field

RAB.SuccEstabCSNoQueuing.CSV

Source Section

Successful RAB Establishments

RAB_SuccEstabCSNoQueuing_CSV_RelocIratHO

Successful CSV RAB Establishment due to Relocation for Incoming Inter-RAT GSM to UMTS Handover

Data Source

RNC

Source Field

RAB.SuccEstabCSNoQueuing.CSV.RelocIratHO

Source Section

UtranCell

RAB_SuccEstabCSV_475CodecSelect

Successful RAB Assignments with 4.75 Codec Selected

© Copyright IBM Corp. 1999, 2009. All rights reserved.

Data Source

RNC

Source Field

VS.RAB.SuccEstabCSV.475CodecSelect

Source Section

Speech Codecs

RAB_SuccEstabCSV_59CodecSelect

Successful RAB Assignments with 5.9 Codec Selected

Data Source

RNC

Source Field

VS.RAB.SuccEstabCSV.59CodecSelect

Source Section

Speech Codecs

RAB_SuccEstabCSV_795CodecSelect

Successful RAB Assignments with 7.95 Codec Selected

Data Source

RNC

Source Field

VS.RAB.SuccEstabCSV.795CodecSelect

Source Section

Speech Codecs

RAB_SuccEstabCSV_MultiCodecSup

Successful RAB Assignments with multiple Codecs Supported

Data Source

RNC

Source Field

VS.RAB.SuccEstabCSV.MultiCodecSup

Source Section

Speech Codecs

RAB_SuccEstabPS_Multiple

Number of Successful Establishments for Multiple I/B PS RABs

Data Source

RNC

Source Field

VS.RAB.SuccEstabPS.Multiple

Source Section

Successful RAB Establishments

RAB_SuccEstabPSNoQueuing_Bgrd

Number of Successful RAB Establishments for PS with QoS class 'Background'

Data Source

RNC

Source Field

RAB.SuccEstabPSNoQueuing.Bgrd

Source Section

UtranCell

RAB_SuccEstabPSNoQueuing_DCH_DCH

Number of Successful RAB Establishments for PS data mapped on DCH transport channels in UL and DL

Data Source

RNC

© Copyright IBM Corp. 1999, 2009. All rights reserved.

Source Field

RAB.SuccEstabPSNoQueuing.DCH_DCH

Source Section

UtranCell

RAB_SuccEstabPSNoQueuing_DCH_HSDSCH

Number of Successful RAB Establishments for PS data mapped on DCH/HS-DSCH transport channels

Data Source

RNC

Source Field

RAB.SuccEstabPSNoQueuing.DCH_HSDSCH

Source Section

UtranCell

RAB_SuccEstabPSNoQueuing_EDCH_HSDSCH

Number of Successful RAB Establishments for PS data mapped on EDCH/HS-DSCH transport channels

Data Source

RNC

Source Field

RAB.SuccEstabPSNoQueuing.EDCH_HSDSCH

Source Section

UtranCell

RAB_SuccEstabPSNoQueuing_Intact

Number of Successful RAB Establishments for PS with QoS class 'Interactive'

Data Source

RNC

Source Field

RAB.SuccEstabPSNoQueuing.Intact

Source Section

UtranCell

RAB_SuccEstabPSNoQueuing_PS

Number of Successful RAB Establishments for PS with no queuing process

Data Source

RNC

Source Field

RAB.SuccEstabPSNoQueuing.PS

Source Section

Successful RAB Establishments

RAB_SuccEstabPSNoQueuing_Strm

Number of Successful RAB Establishments for PS with QoS class 'Streaming'

Data Source

RNC

Source Field

RAB.SuccEstabPSNoQueuing.Strm

Source Section

UtranCell

RAB_SuccEstPSNoQue_DCHHSDSCH_Conf_DCHDCH

Number of Successful RAB Establishments for PS data mapped on DCH/DCH instead of DCH/HSDSCH transport channels

Data Source

RNC

© Copyright IBM Corp. 1999, 2009. All rights reserved.

Source Field

VS.RAB.SuccEstabPSNoQueuing.DCH_HSDSCH.Conf.DCH_DCH

Source Section

UtranCell

RAB_SuccEstPSNoQue_ED_HSD_Conf_DCH_DCH

Number of Successful RAB Establishments for PS data mapped on DCH/ DCH instead of EDCH/HSDSCH transport channels

Data Source

RNC

Source Field

VS.RAB.SuccEstabPSNoQueuing.EDCH_HSDSCH.Conf.DCH_DCH

Source Section

UtranCell

RAB_SuccEstPSNoQue_ED_HSD_Conf_DCH_HSD

Number of Successful RAB Establishments for PS data mapped on DCH/HS-DSCH instead of EDCH/HSDSCH transport channels

Data Source

RNC

Source Field

VS.RAB.SuccEstabPSNoQueuing.EDCH_HSDSCH.Conf.DCH_HSDSCH

Source Section

UtranCell

RabAbnRelPerGrantedRabTypeRefCellGrantedRabCsConv64

Number of abnormal RAB releases per granted RAB type reference cell. This counter should also be pegged in case of abnormal RAB releases during an outgoing relocation. This counter should only be pegged for drops that occurred after the RAB assignment procedure was successful (drops that occurred during the RAB assignment procedure shall not be taken into account) (GrantedRabCsConv64)

Data Source

RNC C-Node

Source Field

VS.RabAbnRelPerGrantedRabTypeRefCell.GrantedRabCsConv64

Source Section

FddCell

RabAbnRelPerGrantedRabTypeRefCellGrantedRabCSSpeechConv

Number of abnormal RAB releases per granted RAB type reference cell. This counter should also be pegged in case of abnormal RAB releases during an outgoing relocation. This counter should only be pegged for drops that occurred after the RAB assignment procedure was successful (drops that occurred during the RAB assignment procedure shall not be taken into account) (GrantedRabCSSpeechConv)

Data Source

RNC C-Node

Source Field

VS.RabAbnRelPerGrantedRabTypeRefCell.GrantedRabCSSpeechConv

Source Section

FddCell

RabAbnRelPerGrantedRabTypeRefCellGrantedRabCsStr

Number of abnormal RAB releases per granted RAB type reference cell. This counter should also be pegged in case of abnormal RAB releases during an outgoing relocation. This counter should only be pegged for drops that occurred after the RAB assignment procedure was successful (drops that occurred during the RAB assignment procedure shall not be taken into account) (GrantedRabCsStr)

Data Source

RNC C-Node

Source Field

VS.RabAbnRelPerGrantedRabTypeRefCell.GrantedRabCsStr

Source Section

FddCell

© Copyright IBM Corp. 1999, 2009. All rights reserved.

RabAbnRelPerGrantedRabTypeRefCellGrantedRabOther

Number of abnormal RAB releases per granted RAB type reference cell. This counter should also be pegged in case of abnormal RAB releases during an outgoing relocation. This counter should only be pegged for drops that occurred after the RAB assignment procedure was successful (drops that occurred during the RAB assignment procedure shall not be taken into account) (GrantedRabOther)

Data Source

RNC C-Node

Source Field

VS.RabAbnRelPerGrantedRabTypeRefCell.GrantedRabOther

Source Section

FddCell

RabAbnRelPerGrantedRabTypeRefCellGrantedRabPsHighRateBgnd

Number of abnormal RAB releases per granted RAB type reference cell. This counter should also be pegged in case of abnormal RAB releases during an outgoing relocation. This counter should only be pegged for drops that occurred after the RAB assignment procedure was successful (drops that occurred during the RAB assignment procedure shall not be taken into account) (GrantedRabPsHighRateBgnd)

Data Source

RNC C-Node

Source Field

VS.RabAbnRelPerGrantedRabTypeRefCell.GrantedRabPsHighRateBgnd

Source Section

FddCell

RabAbnRelPerGrantedRabTypeRefCellGrantedRabPsHighRateInter

Number of abnormal RAB releases per granted RAB type reference cell. This counter should also be pegged in case of abnormal RAB releases during an outgoing relocation. This counter should only be pegged for drops that occurred after the RAB assignment procedure was successful (drops that occurred during the RAB assignment procedure shall not be taken into account) (GrantedRabPsHighRateInter)

Data Source

RNC C-Node

Source Field

VS.RabAbnRelPerGrantedRabTypeRefCell.GrantedRabPsHighRateInter

Source Section

FddCell

RabAbnRelPerGrantedRabTypeRefCellGrantedRabPsLowRateBgnd

Number of abnormal RAB releases per granted RAB type reference cell. This counter should also be pegged in case of abnormal RAB releases during an outgoing relocation. This counter should only be pegged for drops that occurred after the RAB assignment procedure was successful (drops that occurred during the RAB assignment procedure shall not be taken into account) (GrantedRabPsLowRateBgnd)

Data Source

RNC C-Node

Source Field

VS.RabAbnRelPerGrantedRabTypeRefCell.GrantedRabPsLowRateBgnd

Source Section

FddCell

RabAbnRelPerGrantedRabTypeRefCellGrantedRabPsLowRateInter

Number of abnormal RAB releases per granted RAB type reference cell. This counter should also be pegged in case of abnormal RAB releases during an outgoing relocation. This counter should only be pegged for drops that occurred after the RAB assignment procedure was successful (drops that occurred during the RAB assignment procedure shall not be taken into account) (GrantedRabPsLowRateInter)

Data Source

RNC C-Node

Source Field

VS.RabAbnRelPerGrantedRabTypeRefCell.GrantedRabPsLowRateInter

Source Section

FddCell

© Copyright IBM Corp. 1999, 2009. All rights reserved.

RabAbnRelPerGrantedRabTypeRefCellGrantedRabPsStrHiRateStr

Number of abnormal RAB releases per granted RAB type reference cell. This counter should also be pegged in case of abnormal RAB releases during an outgoing relocation. This counter should only be pegged for drops that occurred after the RAB assignment procedure was successful (drops that occurred during the RAB assignment procedure shall not be taken into account) (GrantedRabPsStrHiRateStr)

Data Source

RNC C-Node

Source Field

VS.RabAbnRelPerGrantedRabTypeRefCell.GrantedRabPsStrHiRateStr

Source Section

FddCell

RabAbnRelPerGrantedRabTypeRefCellGrantedRabPsStrLowRateStr

Number of abnormal RAB releases per granted RAB type reference cell. This counter should also be pegged in case of abnormal RAB releases during an outgoing relocation. This counter should only be pegged for drops that occurred after the RAB assignment procedure was successful (drops that occurred during the RAB assignment procedure shall not be taken into account) (GrantedRabPsStrLowRateStr)

Data Source

RNC C-Node

Source Field

VS.RabAbnRelPerGrantedRabTypeRefCell.GrantedRabPsStrLowRateStr

Source Section

FddCell

RABAttEstabCSConv64

CS RAB Establishment Attempts per RAB Id. This counter does not take into account RAB establishment attempts for incoming relocations. (Conv64)

Data Source

RNC C-Node

Source Field

RAB.AttEstab.CS.Conv64

Source Section

FddCell

RABAttEstabCSSpeechConv

CS RAB Establishment Attempts per RAB Id. This counter does not take into account RAB establishment attempts for incoming relocations. (SpeechConv)

Data Source

RNC C-Node

Source Field

RAB.AttEstab.CS.SpeechConv

Source Section

FddCell

RABAttEstabCSStrm

CS RAB Establishment Attempts per RAB Id. This counter does not take into account RAB establishment attempts for incoming relocations. (Strm)

Data Source

RNC C-Node

Source Field

RAB.AttEstab.CS.Strm

Source Section

FddCell

RABAttEstabCSVEC

This PM counts the number of RAB Assignment Requests for Emergency Calls. This PM is only applicable for Emergency Calls. (EC)

Data Source

RNC C-Node

© Copyright IBM Corp. 1999, 2009. All rights reserved.

Source Field

RAB.AttEstabCSV.EC

Source Section

FddCell

RABAttEstabCSVRelocIratHO

RAB Establishment Attempts for CSV (voice/speech) due to relocation for an incoming Inter-RAT GSM to UMTS Handover. (RelocIratHO)

Data Source

RNC C-Node

Source Field

RAB.AttEstab.CSV.RelocIratHO

Source Section

FddCell

RABAttEstabCSVWPS

RAB Assignment Requests for Wireless Priority Service. Number of RAB Assignment Requests for Wireless Priority Service (WPS) calls. This measurement is pegged only if WPS handling is enabled in the RNC. Only applicable in the context of WPS calls. (WPS)

Data Source

RNC C-Node

Source Field

RAB.AttEstabCSV.WPS

Source Section

FddCell

RABAttEstabPSDCHHSDSCHConfDCHDCH

Secondary RAB Establishment attempts which are mapped to DCH/DCH transport channels instead of the initial requested DCH/HSDSCH transport channels per PS RAB Id. (DCH)

Data Source

RNC C-Node

Source Field

RAB.AttEstab.PS.DCH.HSDSCH.Conf.DCH.DCH

Source Section

FddCell

RABAttEstabPSEDCHHSDSCHConfDCHDCH

Secondary RAB Establishment attempts which are mapped to DCH/DCH transport channels instead of the initial requested EDCH/HSDSCH transport channels per PS RAB Id. (DCH)

Data Source

RNC C-Node

Source Field

RAB.AttEstab.PS.EDCH.HSDSCH.Conf.DCH.DCH

Source Section

FddCell

RABAttEstabPSEDCHHSDSCHConfDCHHSDSCH

Secondary RAB Establishment attempts which are mapped to DCH/HSDSCH transport channels instead of the initial requested EDCH/HSDSCH transport channels per PS RAB Id. (HSDSCH)

Data Source

RNC C-Node

Source Field

RAB.AttEstab.PS.EDCH.HSDSCH.Conf.DCH.HSDSCH

Source Section

FddCell

RABAttEstabPSEDCHHSDSCHConfDCHHSDSCHConfDCHDCH

RAB Establishment attempts which are mapped to DCH/DCH transport channels instead of the initial requested EDCH/HSDSCH and secondary requested DCH/HSDSCH transport channels per PS RAB Id. (DCH)

© Copyright IBM Corp. 1999, 2009. All rights reserved.

Data Source

RNC C-Node

Source Field

RAB.AttEstab.PS.EDCH.HSDSCH.Conf.DCH.HSDSCH.Conf.DCH.DCH

Source Section

FddCell

RABAttEstabPSHighRateBgrd

PS RAB Establishment Attempts per PS RAB Id. This counter does not take into account RAB establishment attempts for incoming relocations. (HighRateBgrd)

Data Source

RNC C-Node

Source Field

RAB.AttEstab.PS.HighRateBgrd

Source Section

FddCell

RABAttEstabPSHighRateIntact

PS RAB Establishment Attempts per PS RAB Id. This counter does not take into account RAB establishment attempts for incoming relocations. (HighRateIntact)

Data Source

RNC C-Node

Source Field

RAB.AttEstab.PS.HighRateIntact

Source Section

FddCell

RABAttEstabPSHighRateStrm

PS RAB Establishment Attempts per PS RAB Id. This counter does not take into account RAB establishment attempts for incoming relocations. (HighRateStrm)

Data Source

RNC C-Node

Source Field

RAB.AttEstab.PS.HighRateStrm

Source Section

FddCell

RABAttEstabPSLowRateBgrd

PS RAB Establishment Attempts per PS RAB Id. This counter does not take into account RAB establishment attempts for incoming relocations. (LowRateBgrd)

Data Source

RNC C-Node

Source Field

RAB.AttEstab.PS.LowRateBgrd

Source Section

FddCell

RABAttEstabPSLowRateIntact

PS RAB Establishment Attempts per PS RAB Id. This counter does not take into account RAB establishment attempts for incoming relocations. (LowRateIntact)

Data Source

RNC C-Node

Source Field

RAB.AttEstab.PS.LowRateIntact

Source Section

FddCell

RABAttEstabPSLowRateStrm

PS RAB Establishment Attempts per PS RAB Id. This counter does not take into account RAB establishment attempts for incoming relocations. (LowRateStrm)

© Copyright IBM Corp. 1999, 2009. All rights reserved.

Data Source

RNC C-Node

Source Field

RAB.AttEstab.PS.LowRateStrm

Source Section

FddCell

RABAttEstabPSMultiple

Number of attempts to setup a PS "interactive" or "background" RAB on top of an existing PS "interactive" or "background" RAB for the same UE. (Multiple)

Data Source

RNC C-Node

Source Field

VS.RAB.AttEstabPS.Multiple

Source Section

FddCell

RABAttEstabPSSum

PS RAB Establishment Attempts per PS RAB Id

Data Source

RNC C-Node

Source Field

RAB.AttEstab.PS.Sum

Source Section

FddCell

RABAttEstabPSTrChnDCH_DCH

RAB Establishment Attempts for PS per RAB Id. This counter does not take into account RAB establishment attempts for incoming relocations. (DCH_DCH)

Data Source

RNC C-Node

Source Field

RAB.AttEstab.PS.TrChn.DCH_DCH

Source Section

FddCell

RABAttEstabPSTrChnDCH_HSDSCH

RAB Establishment Attempts for PS per RAB Id. This counter does not take into account RAB establishment attempts for incoming relocations. (DCH_HSDSCH)

Data Source

RNC C-Node

Source Field

RAB.AttEstab.PS.TrChn.DCH_HSDSCH

Source Section

FddCell

RABAttEstabPSTrChnEDCH_HSDSCH

RAB Establishment Attempts for PS per RAB Id. This counter does not take into account RAB establishment attempts for incoming relocations. (EDCH_HSDSCH)

Data Source

RNC C-Node

Source Field

RAB.AttEstab.PS.TrChn.EDCH_HSDSCH

Source Section

FddCell

RABAttEstPS_ED_HSD_CfDCHHSDSCH_Cf_DCHDCH

Number of RAB Establishment Attempts for PS data finally mapped on DCH/DCH instead of EDCH/HS-DSCH and DCH/HSDSCH transport channels

© Copyright IBM Corp. 1999, 2009. All rights reserved.

Data Source

RNC

Source Field

VS.RAB.AttEstabPS.EDCH_HSDSCH.Conf.DCH_HSDSCH.Conf.DCH_DCH

Source Section

UtranCell

RabAttMulMoCsAtt

Number of RAB ASSIGNMENT REQUEST messages received related to the Multi-RAB Mobile Originating calls in CS core network domain. (Att)

Data Source

RNC C-Node

Source Field

VS.RabAttMulMoCs.Att

Source Section

FddCell

RabAttMulMoPsAtt

Number of RAB ASSIGNMENT REQUEST messages received related to the Multi-RAB Mobile Originating calls in PS core network domain. (Att)

Data Source

RNC C-Node

Source Field

VS.RabAttMulMoPs.Att

Source Section

FddCell

RabAttMulMoPsHSDPAAtt

Number of RAB ASSIGNMENT REQUEST messages received related to the Multi-RAB Mobile Originating calls in PS core network domain. (HSDPAAtt)

Data Source

RNC C-Node

Source Field

VS.RabAttMulMoPs.HSDPAAtt

Source Section

FddCell

RabAttMulMoPsHSDPAPresv

Number of RAB ASSIGNMENT REQUEST messages received related to the Multi-RAB Mobile Originating calls in PS core network domain. (HSDPAPresv)

Data Source

RNC C-Node

Source Field

VS.RabAttMulMoPs.HSDPAPresv

Source Section

FddCell

RabAttMulMoPsPresv

Number of RAB ASSIGNMENT REQUEST messages received related to the Multi-RAB Mobile Originating calls in PS core network domain. (Presv)

Data Source

RNC C-Node

Source Field

VS.RabAttMulMoPs.Presv

Source Section

FddCell

RabAttMulMtCsAtt

Number of RAB ASSIGNMENT REQUEST messages received related to the Multi-RAB Mobile Terminating calls in CS core network domain. (Att)

© Copyright IBM Corp. 1999, 2009. All rights reserved.

Data Source

RNC C-Node

Source Field

VS.RabAttMulMtCs.Att

Source Section

FddCell

RabAttMulMtPsAtt

Number of RAB ASSIGNMENT REQUEST messages received related to the Multi-RAB Mobile Terminating calls in PS core network domain. (Att)

Data Source

RNC C-Node

Source Field

VS.RabAttMulMtPs.Att

Source Section

FddCell

RabAttMulMtPsHSDPAAtt

Number of RAB ASSIGNMENT REQUEST messages received related to the Multi-RAB Mobile Terminating calls in PS core network domain. (HSDPAAtt)

Data Source

RNC C-Node

Source Field

VS.RabAttMulMtPs.HSDPAAtt

Source Section

FddCell

RabAttMulMtPsHSDPAPresv

Number of RAB ASSIGNMENT REQUEST messages received related to the Multi-RAB Mobile Terminating calls in PS core network domain. (HSDPAPresv)

Data Source

RNC C-Node

Source Field

VS.RabAttMulMtPs.HSDPAPresv

Source Section

FddCell

RabAttMulMtPsPresv

Number of RAB ASSIGNMENT REQUEST messages received related to the Multi-RAB Mobile Terminating calls in PS core network domain. (Presv)

Data Source

RNC C-Node

Source Field

VS.RabAttMulMtPs.Presv

Source Section

FddCell

RabAttNorMoCsConvCirEtc

Number of RAB ASSIGNMENT REQUEST messages received related to the normal Mobile Originating calls in CS core network domain. (ConvCirEtc)

Data Source

RNC C-Node

Source Field

VS.RabAttNorMoCs.ConvCirEtc

Source Section

FddCell

RabAttNorMoCsConvVce

Number of RAB ASSIGNMENT REQUEST messages received related to the normal Mobile Originating calls in CS core network domain. (ConvVce)

© Copyright IBM Corp. 1999, 2009. All rights reserved.

Data Source

RNC C-Node

Source Field

VS.RabAttNorMoCs.ConvVce

Source Section

FddCell

RabAttNorMoCsEmr

Number of RAB ASSIGNMENT REQUEST messages received related to the normal Mobile Originating calls in CS core network domain. (Emr)

Data Source

RNC C-Node

Source Field

VS.RabAttNorMoCs.Emr

Source Section

FddCell

RabAttNorMoPsBgrd

Number of RAB ASSIGNMENT REQUEST messages received related to the normal Mobile Originating calls in PS core network domain. (Bgrd)

Data Source

RNC C-Node

Source Field

VS.RabAttNorMoPs.Bgrd

Source Section

FddCell

RabAttNorMoPsConv

Number of RAB ASSIGNMENT REQUEST messages received related to the normal Mobile Originating calls in PS core network domain. (Conv)

Data Source

RNC C-Node

Source Field

VS.RabAttNorMoPs.Conv

Source Section

FddCell

RabAttNorMoPsEmr

Number of RAB ASSIGNMENT REQUEST messages received related to the normal Mobile Originating calls in PS core network domain. (Emr)

Data Source

RNC C-Node

Source Field

VS.RabAttNorMoPs.Emr

Source Section

FddCell

RabAttNorMoPsHSDPABgrd

Number of RAB ASSIGNMENT REQUEST messages received related to the normal Mobile Originating calls in PS core network domain. (HSDPABgrd)

Data Source

RNC C-Node

Source Field

VS.RabAttNorMoPs.HSDPABgrd

Source Section

FddCell

RabAttNorMoPsHSDPAConv

Number of RAB ASSIGNMENT REQUEST messages received related to the normal Mobile Originating calls in PS core network domain. (HSDPAConv)

© Copyright IBM Corp. 1999, 2009. All rights reserved.

Data Source

RNC C-Node

Source Field

VS.RabAttNorMoPs.HSDPAConv

Source Section

FddCell

RabAttNorMoPsHSDPAEmr

Number of RAB ASSIGNMENT REQUEST messages received related to the normal Mobile Originating calls in PS core network domain. (HSDPAEmr)

Data Source

RNC C-Node

Source Field

VS.RabAttNorMoPs.HSDPAEmr

Source Section

FddCell

RabAttNorMoPsHSDPAIntact

Number of RAB ASSIGNMENT REQUEST messages received related to the normal Mobile Originating calls in PS core network domain. (HSDPAIntact)

Data Source

RNC C-Node

Source Field

VS.RabAttNorMoPs.HSDPAIntact

Source Section

FddCell

RabAttNorMoPsHSDPAPresv

Number of RAB ASSIGNMENT REQUEST messages received related to the normal Mobile Originating calls in PS core network domain. (HSDPAPresv)

Data Source

RNC C-Node

Source Field

VS.RabAttNorMoPs.HSDPAPresv

Source Section

FddCell

RabAttNorMoPsHSDPAStrm

Number of RAB ASSIGNMENT REQUEST messages received related to the normal Mobile Originating calls in PS core network domain. (HSDPAStrm)

Data Source

RNC C-Node

Source Field

VS.RabAttNorMoPs.HSDPAStrm

Source Section

FddCell

RabAttNorMoPsHSDPASubs

Number of RAB ASSIGNMENT REQUEST messages received related to the normal Mobile Originating calls in PS core network domain. (HSDPASubs)

Data Source

RNC C-Node

Source Field

VS.RabAttNorMoPs.HSDPASubs

Source Section

FddCell

RabAttNorMoPsIntact

Number of RAB ASSIGNMENT REQUEST messages received related to the normal Mobile Originating calls in PS core network domain. (Intact)

© Copyright IBM Corp. 1999, 2009. All rights reserved.

Data Source

RNC C-Node

Source Field

VS.RabAttNorMoPs.Intact

Source Section

FddCell

RabAttNorMoPsPresv

Number of RAB ASSIGNMENT REQUEST messages received related to the normal Mobile Originating calls in PS core network domain. (Presv)

Data Source

RNC C-Node

Source Field

VS.RabAttNorMoPs.Presv

Source Section

FddCell

RabAttNorMoPsStrm

Number of RAB ASSIGNMENT REQUEST messages received related to the normal Mobile Originating calls in PS core network domain. (Strm)

Data Source

RNC C-Node

Source Field

VS.RabAttNorMoPs.Strm

Source Section

FddCell

RabAttNorMoPsSubs

Number of RAB ASSIGNMENT REQUEST messages received related to the normal Mobile Originating calls in PS core network domain. (Subs)

Data Source

RNC C-Node

Source Field

VS.RabAttNorMoPs.Subs

Source Section

FddCell

RabAttNorMtCsConvCirEtc

Number of RAB ASSIGNMENT REQUEST messages received related to the normal Mobile Terminating calls in CS core network domain. (ConvCirEtc)

Data Source

RNC C-Node

Source Field

VS.RabAttNorMtCs.ConvCirEtc

Source Section

FddCell

RabAttNorMtCsConvVce

Number of RAB ASSIGNMENT REQUEST messages received related to the normal Mobile Terminating calls in CS core network domain. (ConvVce)

Data Source

RNC C-Node

Source Field

VS.RabAttNorMtCs.ConvVce

Source Section

FddCell

RabAttNorMtPsBgrd

Number of RAB ASSIGNMENT REQUEST messages received related to the normal Mobile Terminating calls in PS core network domain. (Bgrd)

© Copyright IBM Corp. 1999, 2009. All rights reserved.

Data Source

RNC C-Node

Source Field

VS.RabAttNorMtPs.Bgrd

Source Section

FddCell

RabAttNorMtPsConv

Number of RAB ASSIGNMENT REQUEST messages received related to the normal Mobile Terminating calls in PS core network domain. (Conv)

Data Source

RNC C-Node

Source Field

VS.RabAttNorMtPs.Conv

Source Section

FddCell

RabAttNorMtPsHSDPABgrd

Number of RAB ASSIGNMENT REQUEST messages received related to the normal Mobile Terminating calls in PS core network domain. (HSDPABgrd)

Data Source

RNC C-Node

Source Field

VS.RabAttNorMtPs.HSDPABgrd

Source Section

FddCell

RabAttNorMtPsHSDPAConv

Number of RAB ASSIGNMENT REQUEST messages received related to the normal Mobile Terminating calls in PS core network domain. (HSDPAConv)

Data Source

RNC C-Node

Source Field

VS.RabAttNorMtPs.HSDPAConv

Source Section

FddCell

RabAttNorMtPsHSDPAIntact

Number of RAB ASSIGNMENT REQUEST messages received related to the normal Mobile Terminating calls in PS core network domain. (HSDPAIntact)

Data Source

RNC C-Node

Source Field

VS.RabAttNorMtPs.HSDPAIntact

Source Section

FddCell

RabAttNorMtPsHSDPAPresv

Number of RAB ASSIGNMENT REQUEST messages received related to the normal Mobile Terminating calls in PS core network domain. (HSDPAPresv)

Data Source

RNC C-Node

Source Field

VS.RabAttNorMtPs.HSDPAPresv

Source Section

FddCell

RabAttNorMtPsHSDPAStrm

Number of RAB ASSIGNMENT REQUEST messages received related to the normal Mobile Terminating calls in PS core network domain. (HSDPAStrm)

© Copyright IBM Corp. 1999, 2009. All rights reserved.

Data Source

RNC C-Node

Source Field

VS.RabAttNorMtPs.HSDPAStrm

Source Section

FddCell

RabAttNorMtPsIntact

Number of RAB ASSIGNMENT REQUEST messages received related to the normal Mobile Terminating calls in PS core network domain. (Intact)

Data Source

RNC C-Node

Source Field

VS.RabAttNorMtPs.Intact

Source Section

FddCell

RabAttNorMtPsPresv

Number of RAB ASSIGNMENT REQUEST messages received related to the normal Mobile Terminating calls in PS core network domain. (Presv)

Data Source

RNC C-Node

Source Field

VS.RabAttNorMtPs.Presv

Source Section

FddCell

RabAttNorMtPsStrm

Number of RAB ASSIGNMENT REQUEST messages received related to the normal Mobile Terminating calls in PS core network domain. (Strm)

Data Source

RNC C-Node

Source Field

VS.RabAttNorMtPs.Strm

Source Section

FddCell

RABDropCNInitCSV

Dropped CN (core network) initiated CS Voice RAB Connections. A CSV RAB connection is considered to be "dropped" (abnormally released) if the RAB connection has already been successfully established and is abnormally released due to MSC initiated failure. UTRAN initiated drops are excluded (CSV)

Data Source

RNC C-Node

Source Field

VS.RAB.Drop.CN.Init.CSV

Source Section

FddCell

RABDropCNInitPSCellDCHDCH_DCH

CN (core network) initiated dropped PS RAB connections for Ues in Cell_DCH state per transport channel type. A PS RAB connection is considered to be "dropped" (abnormally released) if the RAB connection has already been successfully established and is abnormally released due to any kind of CN failure (including OAM intervention). UTRAN initiated drops are excluded. (DCH_DCH)

Data Source

RNC C-Node

Source Field

VS.RAB.Drop.CN.Init.PS.CellDCH.DCH_DCH

Source Section

FddCell

© Copyright IBM Corp. 1999, 2009. All rights reserved.

RABDropCNInitPSCellDCHDCH_HSDSCH

CN (core network) initiated dropped PS RAB connections for Ues in Cell_DCH state per transport channel type. A PS RAB connection is considered to be "dropped" (abnormally released) if the RAB connection has already been successfully established and is abnormally released due to any kind of CN failure (including OAM intervention). UTRAN initiated drops are excluded. (DCH_HSDSCH)

Data Source

RNC C-Node

Source Field

VS.RAB.Drop.CN.Init.PS.CellDCH.DCH_HSDSCH

Source Section

FddCell

RABDropCNInitPSCellDCHEDCH_HSDSCH

CN (core network) initiated dropped PS RAB connections for Ues in Cell_DCH state per transport channel type. A PS RAB connection is considered to be "dropped" (abnormally released) if the RAB connection has already been successfully established and is abnormally released due to any kind of CN failure (including OAM intervention). UTRAN initiated drops are excluded. (EDCH_HSDSCH)

Data Source

RNC C-Node

Source Field

VS.RAB.Drop.CN.Init.PS.CellDCH.EDCH_HSDSCH

Source Section

FddCell

RABDropCNInitPSCellFACH

CN (core network) initiated dropped PS RAB connections for Ues being in Cell_FACH state. A PS RAB connection is considered to be "dropped" (abnormally released) if the RAB connection has already been successfully established and is abnormally released due to any kind of CN failure (including OAM intervention). UTRAN initiated drops are (CellFACH)

Data Source

RNC C-Node

Source Field

VS.RAB.Drop.CN.Init.PS.CellFACH

Source Section

FddCell

RABDropCSCauseDL_RLF

Dropped CS RAB connection per failure cause (DL_RLF)

Data Source

RNC C-Node

Source Field

VS.RAB.Drop.CS.Cause.DL_RLF

Source Section

FddCell

RABDropCSCauseUL_RLF

Dropped CS RAB connection per failure cause (UL_RLF)

Data Source

RNC C-Node

Source Field

VS.RAB.Drop.CS.Cause.UL_RLF

Source Section

FddCell

RABDropCSCodecChange

Dropped CS RAB connections during AMR codec change due to unsuccessful termination of the Iu Rate Control procedure. (CodecChange)

Data Source

RNC C-Node

© Copyright IBM Corp. 1999, 2009. All rights reserved.

Source Field

VS.RAB.Drop.CS.CodecChange

Source Section

FddCell

RABDropCSInterFreqHHO

Dropped CS RAB connections due to unrecoverable failures during inter-frequency hard handover (InterFreqHHO)

Data Source

RNC C-Node

Source Field

VS.RAB.Drop.CS.InterFreqHHO

Source Section

FddCell

RABDropCSRelocUEInvol

Dropped CS RAB connection due to SRNS relocation. (RelocUEInvol)

Data Source

RNC C-Node

Source Field

VS.RAB.Drop.CS.RelocUEInvol

Source Section

FddCell

RABDropCSV

Dropped UTRAN Initiated CS Voice RAB Connections (CSV)

Data Source

RNC C-Node

Source Field

VS.RAB.Drop.CSV

Source Section

FddCell

RABDropCSVUESigConnRel

Dropped CS Voice RAB Connections due to UE Initiated Signalling Connection Release (UESigConnRel)

Data Source

RNC C-Node

Source Field

VS.RAB.Drop.CSV.UESigConnRel

Source Section

FddCell

RABDropPSCauseDL_RLCErrRate

Dropped PS RAB connection per failure cause. (DL_RLCErrRate)

Data Source

RNC C-Node

Source Field

VS.RAB.Drop.PS.Cause.DL_RLCErrRate

Source Section

FddCell

RABDropPSCauseDL_RLF

Dropped PS RAB connection per failure cause. (DL_RLF)

Data Source

RNC C-Node

© Copyright IBM Corp. 1999, 2009. All rights reserved.

Source Field

VS.RAB.Drop.PS.Cause.DL_RLF

Source Section

FddCell

RABDropPSCauseUL_RLCErrRate

Dropped PS RAB connection per failure cause. (UL_RLCErrRate)

Data Source

RNC C-Node

Source Field

VS.RAB.Drop.PS.Cause.UL_RLCErrRate

Source Section

FddCell

RABDropPSCauseUL_RLF

Dropped PS RAB connection per failure cause. (UL_RLF)

Data Source

RNC C-Node

Source Field

VS.RAB.Drop.PS.Cause.UL_RLF

Source Section

FddCell

RABDropPSCellDCHDCH_DCH

Dropped UTRAN Initiated PS RAB Connections with UE in Cell_DCH per transport channel format. This counter should only be pegged for drops that occurred after the RAB assignment procedure was successful (drops occurring during the RAB assignment procedure shall not be taken into account). (DCH_DCH)

Data Source

RNC C-Node

Source Field

VS.RAB.Drop.PS.CellDCH.DCH_DCH

Source Section

FddCell

RABDropPSCellDCHDCH_HSDSCH

Dropped UTRAN Initiated PS RAB Connections with UE in Cell_DCH per transport channel format. This counter should only be pegged for drops that occurred after the RAB assignment procedure was successful (drops occurring during the RAB assignment procedure shall not be taken into account). (DCH_HSDSCH)

Data Source

RNC C-Node

Source Field

VS.RAB.Drop.PS.CellDCH.DCH_HSDSCH

Source Section

FddCell

RABDropPSCellDCHEDCH_HSDSCH

Dropped UTRAN Initiated PS RAB Connections with UE in Cell_DCH per transport channel format. This counter should only be pegged for drops that occurred after the RAB assignment procedure was successful (drops occurring during the RAB assignment procedure shall not be taken into account). (EDCH_HSDSCH)

Data Source

RNC C-Node

Source Field

VS.RAB.Drop.PS.CellDCH.EDCH_HSDSCH

Source Section

FddCell

RABDropPSCellDCHRelProcIuRelReq

Dropped UTRAN Initiated PS RAB Connections with UE in Cell_DCH (IuRelReq)

© Copyright IBM Corp. 1999, 2009. All rights reserved.

Data Source

RNC C-Node

Source Field

VS.RAB.Drop.PS.CellDCH.RelProc.IuRelReq

Source Section

FddCell

RABDropPSCellDCHRelProcRABRelReq

Dropped UTRAN Initiated PS RAB Connections with UE in Cell_DCH (RABRelReq)

Data Source

RNC C-Node

Source Field

VS.RAB.Drop.PS.CellDCH.RelProc.RABRelReq

Source Section

FddCell

RABDropPSCellDCHRelProcReset

Dropped UTRAN Initiated PS RAB Connections with UE in Cell_DCH (Reset)

Data Source

RNC C-Node

Source Field

VS.RAB.Drop.PS.CellDCH.RelProc.Reset

Source Section

FddCell

RABDropPSCellFACH

Dropped UTRAN Initiated PS RAB Connections with UE in Cell_FACH (CellFACH)

Data Source

RNC C-Node

Source Field

VS.RAB.Drop.PS.CellFACH

Source Section

FddCell

RABDropPSCsIratHo

Dropped PS RAB connections due to successful CS IRAT HO. (CsIratHo)

Data Source

RNC C-Node

Source Field

VS.RAB.Drop.PS.CsIratHo

Source Section

FddCell

RABDropPSInterFreqHHO

Dropped PS RAB connections due to unrecoverable failures at inter-frequency hard handover. (InterFreqHHO)

Data Source

RNC C-Node

Source Field

VS.RAB.Drop.PS.InterFreqHHO

Source Section

FddCell

RABDropPSRelocUEInvol

Dropped RAB connection caused by SRNS relocation for the PS domain. (UEInvol)

Data Source

RNC C-Node

© Copyright IBM Corp. 1999, 2009. All rights reserved.

Source Field

VS.RAB.Drop.PS.Reloc.UEInvol

Source Section

FddCell

RABDropPSUESigConnRel

Dropped PS RAB Connections due to UE Initiated Signalling Connection Release (UESigConnRel)

Data Source

RNC C-Node

Source Field

VS.RAB.Drop.PS.UESigConnRel

Source Section

FddCell

RABEstabCancelCSCallRel

Cancelled CS RAB establishment procedures due to "normal call release". (CallRel)

Data Source

RNC C-Node

Source Field

VS.RAB.EstabCancel.CS.CallRel

Source Section

FddCell

RABEstabCancelPSCallRel

Cancelled PS RAB establishment procedures due to "normal call release". (CallRel)

Data Source

RNC C-Node

Source Field

VS.RAB.EstabCancel.PS.CallRel

Source Section

FddCell

RabEstabPerReqRabTypeRefCellReqRabCsConv64

Number of RAB establishment attempts (per Rabid and not per procedure). This counter should also be pegged in case of RAB allocation attempts for incoming relocations. (ReqRabCsConv64)

Data Source

RNC C-Node

Source Field

VS.RabEstabPerReqRabTypeRefCell.ReqRabCsConv64

Source Section

FddCell

RabEstabPerReqRabTypeRefCellReqRabCsSpeechConv

Number of RAB establishment attempts (per Rabid and not per procedure). This counter should also be pegged in case of RAB allocation attempts for incoming relocations. (ReqRabCsSpeechConv)

Data Source

RNC C-Node

Source Field

VS.RabEstabPerReqRabTypeRefCell.ReqRabCsSpeechConv

Source Section

FddCell

RabEstabPerReqRabTypeRefCellReqRabCsStr

Number of RAB establishment attempts (per Rabid and not per procedure). This counter should also be pegged in case of RAB allocation attempts for incoming relocations. (ReqRabCsStr)

© Copyright IBM Corp. 1999, 2009. All rights reserved.

Data Source

RNC C-Node

Source Field

VS.RabEstabPerReqRabTypeRefCell.ReqRabCsStr

Source Section

FddCell

RabEstabPerReqRabTypeRefCellReqRabOther

Number of RAB establishment attempts (per Rabid and not per procedure). This counter should also be pegged in case of RAB allocation attempts for incoming relocations. (ReqRabOther)

Data Source

RNC C-Node

Source Field

VS.RabEstabPerReqRabTypeRefCell.ReqRabOther

Source Section

FddCell

RabEstabPerReqRabTypeRefCellReqRabPsHighRateBgnd

Number of RAB establishment attempts (per Rabid and not per procedure). This counter should also be pegged in case of RAB allocation attempts for incoming relocations. (ReqRabPsHighRateBgnd)

Data Source

RNC C-Node

Source Field

VS.RabEstabPerReqRabTypeRefCell.ReqRabPsHighRateBgnd

Source Section

FddCell

RabEstabPerReqRabTypeRefCellReqRabPsHighRateInter

Number of RAB establishment attempts (per Rabid and not per procedure). This counter should also be pegged in case of RAB allocation attempts for incoming relocations. (ReqRabPsHighRateInter)

Data Source

RNC C-Node

Source Field

VS.RabEstabPerReqRabTypeRefCell.ReqRabPsHighRateInter

Source Section

FddCell

RabEstabPerReqRabTypeRefCellReqRabPsLowRateBgnd

Number of RAB establishment attempts (per Rabid and not per procedure). This counter should also be pegged in case of RAB allocation attempts for incoming relocations. (ReqRabPsLowRateBgnd)

Data Source

RNC C-Node

Source Field

VS.RabEstabPerReqRabTypeRefCell.ReqRabPsLowRateBgnd

Source Section

FddCell

RabEstabPerReqRabTypeRefCellReqRabPsLowRateInter

Number of RAB establishment attempts (per Rabid and not per procedure). This counter should also be pegged in case of RAB allocation attempts for incoming relocations. (ReqRabPsLowRateInter)

Data Source

RNC C-Node

Source Field

VS.RabEstabPerReqRabTypeRefCell.ReqRabPsLowRateInter

© Copyright IBM Corp. 1999, 2009. All rights reserved.

Source Section

FddCell

RabEstabPerReqRabTypeRefCellReqRabPsStrHiRateStr

Number of RAB establishment attempts (per Rabid and not per procedure). This counter should also be pegged in case of RAB allocation attempts for incoming relocations. (ReqRabPsStrHiRateStr)

Data Source

RNC C-Node

Source Field

VS.RabEstabPerReqRabTypeRefCell.ReqRabPsStrHiRateStr

Source Section

FddCell

RabEstabPerReqRabTypeRefCellReqRabPsStrLowRateStr

Number of RAB establishment attempts (per Rabid and not per procedure). This counter should also be pegged in case of RAB allocation attempts for incoming relocations. (ReqRabPsStrLowRateStr)

Data Source

RNC C-Node

Source Field

VS.RabEstabPerReqRabTypeRefCell.ReqRabPsStrLowRateStr

Source Section

FddCell

RabEstabSuccPerGrantedRabTypeRefCellGrantedRabCsConv64

Number of successful RAB establishment per granted RAB type (per Rabid and not per procedure). This counter should also be pegged for RAB successfully allocated for incoming relocations. (GrantedRabCsConv64)

Data Source

RNC C-Node

Source Field

VS.RabEstabSuccPerGrantedRabTypeRefCell.GrantedRabCsConv64

Source Section

FddCell

RabEstabSuccPerGrantedRabTypeRefCellGrantedRabCSSpeechConv

Number of successful RAB establishment per granted RAB type (per Rabid and not per procedure). This counter should also be pegged for RAB successfully allocated for incoming relocations. (GrantedRabCSSpeechConv)

Data Source

RNC C-Node

Source Field

VS.RabEstabSuccPerGrantedRabTypeRefCell.GrantedRabCSSpeechConv

Source Section

FddCell

RabEstabSuccPerGrantedRabTypeRefCellGrantedRabCsStr

Number of successful RAB establishment per granted RAB type (per Rabid and not per procedure). This counter should also be pegged for RAB successfully allocated for incoming relocations. (GrantedRabCsStr)

Data Source

RNC C-Node

Source Field

VS.RabEstabSuccPerGrantedRabTypeRefCell.GrantedRabCsStr

Source Section

FddCell

RabEstabSuccPerGrantedRabTypeRefCellGrantedRabOther

Number of successful RAB establishment per granted RAB type (per Rabid and not per procedure). This counter should also be pegged for RAB successfully allocated for incoming relocations. (GrantedRabOther)

© Copyright IBM Corp. 1999, 2009. All rights reserved.

Data Source

RNC C-Node

Source Field

VS.RabEstabSuccPerGrantedRabTypeRefCell.GrantedRabOther

Source Section

FddCell

RabEstabSuccPerGrantedRabTypeRefCellGrantedRabPsHighRateBgnd

Number of successful RAB establishment per granted RAB type (per Rabid and not per procedure). This counter should also be pegged for RAB successfully allocated for incoming relocations. (GrantedRabPsHighRateBgnd)

Data Source

RNC C-Node

Source Field

VS.RabEstabSuccPerGrantedRabTypeRefCell.GrantedRabPsHighRateBgnd

Source Section

FddCell

RabEstabSuccPerGrantedRabTypeRefCellGrantedRabPsHighRateInter

Number of successful RAB establishment per granted RAB type (per Rabid and not per procedure). This counter should also be pegged for RAB successfully allocated for incoming relocations. (GrantedRabPsHighRateInter)

Data Source

RNC C-Node

Source Field

VS.RabEstabSuccPerGrantedRabTypeRefCell.GrantedRabPsHighRateInter

Source Section

FddCell

RabEstabSuccPerGrantedRabTypeRefCellGrantedRabPsLowRateBgnd

Number of successful RAB establishment per granted RAB type (per Rabid and not per procedure). This counter should also be pegged for RAB successfully allocated for incoming relocations. (GrantedRabPsLowRateBgnd)

Data Source

RNC C-Node

Source Field

VS.RabEstabSuccPerGrantedRabTypeRefCell.GrantedRabPsLowRateBgnd

Source Section

FddCell

RabEstabSuccPerGrantedRabTypeRefCellGrantedRabPsLowRateInter

Number of successful RAB establishment per granted RAB type (per Rabid and not per procedure). This counter should also be pegged for RAB successfully allocated for incoming relocations. (GrantedRabPsLowRateInter)

Data Source

RNC C-Node

Source Field

VS.RabEstabSuccPerGrantedRabTypeRefCell.GrantedRabPsLowRateInter

Source Section

FddCell

RabEstabSuccPerGrantedRabTypeRefCellGrantedRabPsStrHiRateStr

Number of successful RAB establishment per granted RAB type (per Rabid and not per procedure). This counter should also be pegged for RAB successfully allocated for incoming relocations. (GrantedRabPsStrHiRateStr)

Data Source

RNC C-Node

Source Field

VS.RabEstabSuccPerGrantedRabTypeRefCell.GrantedRabPsStrHiRateStr

© Copyright IBM Corp. 1999, 2009. All rights reserved.

Source Section

FddCell

RabEstabSuccPerGrantedRabTypeRefCellGrantedRabPsStrLowRateStr

Number of successful RAB establishment per granted RAB type (per Rabid and not per procedure). This counter should also be pegged for RAB successfully allocated for incoming relocations. (GrantedRabPsStrLowRateStr)

Data Source

RNC C-Node

Source Field

VS.RabEstabSuccPerGrantedRabTypeRefCell.GrantedRabPsStrLowRateStr

Source Section

FddCell

RabEstabSuccPerReqRabTypRefCellReqRabCsConv64

Number of RAB established per requested RAB type reference cell. This counter should also be pegged for RAB successfully allocated for incoming relocations. (ReqRabCsConv64)

Data Source

RNC C-Node

Source Field

VS.RabEstabSuccPerReqRabTypRefCell.ReqRabCsConv64

Source Section

FddCell

RabEstabSuccPerReqRabTypRefCellReqRabCsSpeechConv

Number of RAB established per requested RAB type reference cell. This counter should also be pegged for RAB successfully allocated for incoming relocations. (ReqRabCsSpeechConv)

Data Source

RNC C-Node

Source Field

VS.RabEstabSuccPerReqRabTypRefCell.ReqRabCsSpeechConv

Source Section

FddCell

RabEstabSuccPerReqRabTypRefCellReqRabCsStr

Number of RAB established per requested RAB type reference cell. This counter should also be pegged for RAB successfully allocated for incoming relocations. (ReqRabCsStr)

Data Source

RNC C-Node

Source Field

VS.RabEstabSuccPerReqRabTypRefCell.ReqRabCsStr

Source Section

FddCell

RabEstabSuccPerReqRabTypRefCellReqRabOther

Number of RAB established per requested RAB type reference cell. This counter should also be pegged for RAB successfully allocated for incoming relocations. (ReqRabOther)

Data Source

RNC C-Node

Source Field

VS.RabEstabSuccPerReqRabTypRefCell.ReqRabOther

Source Section

FddCell

RabEstabSuccPerReqRabTypRefCellReqRabPsHighRateBgnd

Number of RAB established per requested RAB type reference cell. This counter should also be pegged for RAB successfully allocated for incoming relocations. (ReqRabPsHighRateBgnd)

Data Source

RNC C-Node

Source Field

VS.RabEstabSuccPerReqRabTypRefCell.ReqRabPsHighRateBgnd

© Copyright IBM Corp. 1999, 2009. All rights reserved.

Source Section

FddCell

RabEstabSuccPerReqRabTypRefCellReqRabPsHighRateInter

Number of RAB established per requested RAB type reference cell. This counter should also be pegged for RAB successfully allocated for incoming relocations. (ReqRabPsHighRateInter)

Data Source

RNC C-Node

Source Field

VS.RabEstabSuccPerReqRabTypRefCell.ReqRabPsHighRateInter

Source Section

FddCell

RabEstabSuccPerReqRabTypRefCellReqRabPsLowRateBgnd

Number of RAB established per requested RAB type reference cell. This counter should also be pegged for RAB successfully allocated for incoming relocations. (ReqRabPsLowRateBgnd)

Data Source

RNC C-Node

Source Field

VS.RabEstabSuccPerReqRabTypRefCell.ReqRabPsLowRateBgnd

Source Section

FddCell

RabEstabSuccPerReqRabTypRefCellReqRabPsLowRateInter

Number of RAB established per requested RAB type reference cell. This counter should also be pegged for RAB successfully allocated for incoming relocations. (ReqRabPsLowRateInter)

Data Source

RNC C-Node

Source Field

VS.RabEstabSuccPerReqRabTypRefCell.ReqRabPsLowRateInter

Source Section

FddCell

RabEstabSuccPerReqRabTypRefCellReqRabPsStrHiRateStr

Number of RAB established per requested RAB type reference cell. This counter should also be pegged for RAB successfully allocated for incoming relocations. (ReqRabPsStrHiRateStr)

Data Source

RNC C-Node

Source Field

VS.RabEstabSuccPerReqRabTypRefCell.ReqRabPsStrHiRateStr

Source Section

FddCell

RabEstabSuccPerReqRabTypRefCellReqRabPsStrLowRateStr

Number of RAB established per requested RAB type reference cell. This counter should also be pegged for RAB successfully allocated for incoming relocations. (ReqRabPsStrLowRateStr)

Data Source

RNC C-Node

Source Field

VS.RabEstabSuccPerReqRabTypRefCell.ReqRabPsStrLowRateStr

Source Section

FddCell

RABFailEstab_CodeStarv

Number of RAB Establishment Failures due to Code Starvation

Data Source

RNC

Source Field

RABFailEstab.CodeStarv

© Copyright IBM Corp. 1999, 2009. All rights reserved.

Source Section

RAB Establishment Failures

RABFailEstab_Load

Number of RAB Establishment Failures due to Load

Data Source

RNC

Source Field

RABFailEstab.Load

Source Section

RAB Establishment Failures

RABFailEstab_RBSetupFail

Number of RAB Establishment Failures due to RB Setup Failure

Data Source

RNC

Source Field

RABFailEstab.RBSetupFail

Source Section

RAB Establishment Failures

RABFailEstab_T3

Number of RAB Establishment Failures due to T3 expiry

Data Source

RNC

Source Field

RABFailEstab.T3

Source Section

RAB Establishment Failures

RABFailEstabCSCodeStarv

RAB Establishment Failures per failure cause for the CS domain. (CodeStarv)

Data Source

RNC C-Node

Source Field

RAB.FailEstab.CS.CodeStarv

Source Section

FddCell

RABFailEstabCSDLPwr

RAB Establishment Failures per failure cause for the CS domain. (DLPwr)

Data Source

RNC C-Node

Source Field

RAB.FailEstab.CS.DLPwr

Source Section

FddCell

RABFailEstabCSRBSetupExp

RAB Establishment Failures per failure cause for the CS domain. (RBSetupExp)

Data Source

RNC C-Node

Source Field

RAB.FailEstab.CS.RBSetupExp

Source Section

FddCell

RABFailEstabCSRBSetupFail

RAB Establishment Failures per failure cause for the CS domain. (RBSetupFail)

© Copyright IBM Corp. 1999, 2009. All rights reserved.

Data Source

RNC C-Node

Source Field

RAB.FailEstab.CS.RBSetupFail

Source Section

FddCell

RABFailEstabCSRLFailNodeBErr

RAB Establishment Failures per failure cause for the CS domain. (RLFailNodeBErr)

Data Source

RNC C-Node

Source Field

RAB.FailEstab.CS.RLFailNodeBErr

Source Section

FddCell

RABFailEstabCSRLFailNodeBResource

RAB Establishment Failures per failure cause for the CS domain. (RLFailNodeBResource)

Data Source

RNC C-Node

Source Field

RAB.FailEstab.CS.RLFailNodeBResource

Source Section

FddCell

RABFailEstabCSRLFailOther

RAB Establishment Failures per failure cause for the CS domain. (RLFailOther)

Data Source

RNC C-Node

Source Field

RAB.FailEstab.CS.RLFailOther

Source Section

FddCell

RABFailEstabCSRLReconfigExp

RAB Establishment Failures per failure cause for the CS domain. (RLReconfigExp)

Data Source

RNC C-Node

Source Field

RAB.FailEstab.CS.RLReconfigExp

Source Section

FddCell

RABFailEstabCSULLoad

RAB Establishment Failures per failure cause for the CS domain. (ULLoad)

Data Source

RNC C-Node

Source Field

RAB.FailEstab.CS.ULLoad

Source Section

FddCell

RABFailEstabPSCodeStarv

RAB Establishment Failures per failure cause for the PS domain (CodeStarv)

Data Source

RNC C-Node

Source Field

RAB.FailEstab.PS.CodeStarv

© Copyright IBM Corp. 1999, 2009. All rights reserved.

Source Section

FddCell

RABFailEstabPSDLPwr

RAB Establishment Failures per failure cause for the PS domain (DLPwr)

Data Source

RNC C-Node

Source Field

RAB.FailEstab.PS.DLPwr

Source Section

FddCell

RABFailEstabPSRBSetupExp

RAB Establishment Failures per failure cause for the PS domain (RBSetupExp)

Data Source

RNC C-Node

Source Field

RAB.FailEstab.PS.RBSetupExp

Source Section

FddCell

RABFailEstabPSRBSetupFail

RAB Establishment Failures per failure cause for the PS domain (RBSetupFail)

Data Source

RNC C-Node

Source Field

RAB.FailEstab.PS.RBSetupFail

Source Section

FddCell

RABFailEstabPSRLFailNodeBErr

RAB Establishment Failures per failure cause for the PS domain (RLFailNodeBErr)

Data Source

RNC C-Node

Source Field

RAB.FailEstab.PS.RLFailNodeBErr

Source Section

FddCell

RABFailEstabPSRLFailNodeBResource

RAB Establishment Failures per failure cause for the PS domain (RLFailNodeBResource)

Data Source

RNC C-Node

Source Field

RAB.FailEstab.PS.RLFailNodeBResource

Source Section

FddCell

RABFailEstabPSRLFailOther

RAB Establishment Failures per failure cause for the PS domain (RLFailOther)

Data Source

RNC C-Node

Source Field

RAB.FailEstab.PS.RLFailOther

Source Section

FddCell

RABFailEstabPSRLReconfigExp

RAB Establishment Failures per failure cause for the PS domain (RLReconfigExp)

© Copyright IBM Corp. 1999, 2009. All rights reserved.

Data Source

RNC C-Node

Source Field

RAB.FailEstab.PS.RLReconfigExp

Source Section

FddCell

RABFailEstabPSServComb

Number of PS RABs failed to be established due to lack of service combination support. (ServComb)

Data Source

RNC C-Node

Source Field

RAB.FailEstabPS.ServComb

Source Section

FddCell

RABFailEstabPSULLoad

RAB Establishment Failures per failure cause for the PS domain (ULLoad)

Data Source

RNC C-Node

Source Field

RAB.FailEstab.PS.ULLoad

Source Section

FddCell

RabIncomingPerGrantedRabRefCellGrantedRabCsConv64

Number of times in which that cell becomes the reference cell with an active RAB. This counter takes into account the primary cell changes during SHO mobility and inter-frequency hard handovers (excluding HHO involving the core network) (GrantedRabCsConv64)

Data Source

RNC C-Node

Source Field

VS.RabIncomingPerGrantedRabRefCell.GrantedRabCsConv64

Source Section

FddCell

RabIncomingPerGrantedRabRefCellGrantedRabCSSpeechConv

Number of times in which that cell becomes the reference cell with an active RAB. This counter takes into account the primary cell changes during SHO mobility and inter-frequency hard handovers (excluding HHO involving the core network) (GrantedRabCSSpeechConv)

Data Source

RNC C-Node

Source Field

VS.RabIncomingPerGrantedRabRefCell.GrantedRabCSSpeechConv

Source Section

FddCell

RabIncomingPerGrantedRabRefCellGrantedRabCsStr

Number of times in which that cell becomes the reference cell with an active RAB. This counter takes into account the primary cell changes during SHO mobility and inter-frequency hard handovers (excluding HHO involving the core network) (GrantedRabCsStr)

Data Source

RNC C-Node

Source Field

VS.RabIncomingPerGrantedRabRefCell.GrantedRabCsStr

Source Section

FddCell

© Copyright IBM Corp. 1999, 2009. All rights reserved.

RabIncomingPerGrantedRabRefCellGrantedRabOther

Number of times in which that cell becomes the reference cell with an active RAB. This counter takes into account the primary cell changes during SHO mobility and inter-frequency hard handovers (excluding HHO involving the core network) (GrantedRabOther)

Data Source

RNC C-Node

Source Field

VS.RabIncomingPerGrantedRabRefCell.GrantedRabOther

Source Section

FddCell

RabIncomingPerGrantedRabRefCellGrantedRabPsHighRateBgnd

Number of times in which that cell becomes the reference cell with an active RAB. This counter takes into account the primary cell changes during SHO mobility and inter-frequency hard handovers (excluding HHO involving the core network) (GrantedRabPsHighRateBgnd)

Data Source

RNC C-Node

Source Field

VS.RabIncomingPerGrantedRabRefCell.GrantedRabPsHighRateBgnd

Source Section

FddCell

RabIncomingPerGrantedRabRefCellGrantedRabPsHighRateInter

Number of times in which that cell becomes the reference cell with an active RAB. This counter takes into account the primary cell changes during SHO mobility and inter-frequency hard handovers (excluding HHO involving the core network) (GrantedRabPsHighRateInter)

Data Source

RNC C-Node

Source Field

VS.RabIncomingPerGrantedRabRefCell.GrantedRabPsHighRateInter

Source Section

FddCell

RabIncomingPerGrantedRabRefCellGrantedRabPsLowRateBgnd

Number of times in which that cell becomes the reference cell with an active RAB. This counter takes into account the primary cell changes during SHO mobility and inter-frequency hard handovers (excluding HHO involving the core network) (GrantedRabPsLowRateBgnd)

Data Source

RNC C-Node

Source Field

VS.RabIncomingPerGrantedRabRefCell.GrantedRabPsLowRateBgnd

Source Section

FddCell

RabIncomingPerGrantedRabRefCellGrantedRabPsLowRateInter

Number of times in which that cell becomes the reference cell with an active RAB. This counter takes into account the primary cell changes during SHO mobility and inter-frequency hard handovers (excluding HHO involving the core network) (GrantedRabPsLowRateInter)

Data Source

RNC C-Node

Source Field

VS.RabIncomingPerGrantedRabRefCell.GrantedRabPsLowRateInter

Source Section

FddCell

RabIncomingPerGrantedRabRefCellGrantedRabPsStrHiRateStr

Number of times in which that cell becomes the reference cell with an active RAB. This counter takes into account the primary cell changes during SHO mobility and inter-frequency hard handovers (excluding HHO involving the core network) (GrantedRabPsStrHiRateStr)

Data Source

RNC C-Node

© Copyright IBM Corp. 1999, 2009. All rights reserved.

Source Field

VS.RabIncomingPerGrantedRabRefCell.GrantedRabPsStrHiRateStr

Source Section

FddCell

RabIncomingPerGrantedRabRefCellGrantedRabPsStrLowRateStr

Number of times in which that cell becomes the reference cell with an active RAB. This counter takes into account the primary cell changes during SHO mobility and inter-frequency hard handovers (excluding HHO involving the core network) (GrantedRabPsStrLowRateStr)

Data Source

RNC C-Node

Source Field

VS.RabIncomingPerGrantedRabRefCell.GrantedRabPsStrLowRateStr

Source Section

FddCell

RABMeanCellDCHCompModeAvg

Mean number of RABs that are in compressed mode. (Avg)

Data Source

RNC C-Node

Source Field

VS.RAB.MeanCellDCH.CompMode.Avg

Source Section

FddCell

RABMeanCellDCHCompModeCum

Mean number of RABs that are in compressed mode. (Cum)

Data Source

RNC C-Node

Source Field

VS.RAB.MeanCellDCH.CompMode.Cum

Source Section

FddCell

RABMeanCellDCHCompModeMax

Mean number of RABs that are in compressed mode. (Max)

Data Source

RNC C-Node

Source Field

VS.RAB.MeanCellDCH.CompMode.Max

Source Section

FddCell

RABMeanCellDCHCompModeMin

Mean number of RABs that are in compressed mode. (Min)

Data Source

RNC C-Node

Source Field

VS.RAB.MeanCellDCH.CompMode.Min

Source Section

FddCell

RABMeanCellDCHCompModeNbEvt

Mean number of RABs that are in compressed mode. (NbEvt)

Data Source

RNC C-Node

Source Field

VS.RAB.MeanCellDCH.CompMode.NbEvt

© Copyright IBM Corp. 1999, 2009. All rights reserved.

Source Section

FddCell

RABMeanCellDCHPSBgrd_DCH_DCHAvg

Mean number of PS RABs in Cell_DCH per traffic class (TC) split up per transport channel format. (Avg)

Data Source

RNC C-Node

Source Field

VS.RAB.MeanCellDCH.PS.Bgrd_DCH_DCH.Avg

Source Section

FddCell

RABMeanCellDCHPSBgrd_DCH_DCHCum

Mean number of PS RABs in Cell_DCH per traffic class (TC) split up per transport channel format. (Cum)

Data Source

RNC C-Node

Source Field

VS.RAB.MeanCellDCH.PS.Bgrd_DCH_DCH.Cum

Source Section

FddCell

RABMeanCellDCHPSBgrd_DCH_DCHMax

Mean number of PS RABs in Cell_DCH per traffic class (TC) split up per transport channel format. (Max)

Data Source

RNC C-Node

Source Field

VS.RAB.MeanCellDCH.PS.Bgrd_DCH_DCH.Max

Source Section

FddCell

RABMeanCellDCHPSBgrd_DCH_DCHMin

Mean number of PS RABs in Cell_DCH per traffic class (TC) split up per transport channel format. (Min)

Data Source

RNC C-Node

Source Field

VS.RAB.MeanCellDCH.PS.Bgrd_DCH_DCH.Min

Source Section

FddCell

RABMeanCellDCHPSBgrd_DCH_DCHNbEvt

Mean number of PS RABs in Cell_DCH per traffic class (TC) split up per transport channel format. (NbEvt)

Data Source

RNC C-Node

Source Field

VS.RAB.MeanCellDCH.PS.Bgrd_DCH_DCH.NbEvt

Source Section

FddCell

RABMeanCellDCHPSBgrd_DCH_HSDSCHAvg

Mean number of PS RABs in Cell_DCH per traffic class (TC) split up per transport channel format. (Avg)

Data Source

RNC C-Node

Source Field

VS.RAB.MeanCellDCH.PS.Bgrd_DCH_HSDSCH.Avg

© Copyright IBM Corp. 1999, 2009. All rights reserved.

Source Section

FddCell

RABMeanCellDCHPSBgrd_DCH_HSDSCHCum

Mean number of PS RABs in Cell_DCH per traffic class (TC) split up per transport channel format. (Cum)

Data Source

RNC C-Node

Source Field

VS.RAB.MeanCellDCH.PS.Bgrd_DCH_HSDSCH.Cum

Source Section

FddCell

RABMeanCellDCHPSBgrd_DCH_HSDSCHMax

Mean number of PS RABs in Cell_DCH per traffic class (TC) split up per transport channel format. (Max)

Data Source

RNC C-Node

Source Field

VS.RAB.MeanCellDCH.PS.Bgrd_DCH_HSDSCH.Max

Source Section

FddCell

RABMeanCellDCHPSBgrd_DCH_HSDSCHMin

Mean number of PS RABs in Cell_DCH per traffic class (TC) split up per transport channel format. (Min)

Data Source

RNC C-Node

Source Field

VS.RAB.MeanCellDCH.PS.Bgrd_DCH_HSDSCH.Min

Source Section

FddCell

RABMeanCellDCHPSBgrd_DCH_HSDSCHNbEvt

Mean number of PS RABs in Cell_DCH per traffic class (TC) split up per transport channel format. (NbEvt)

Data Source

RNC C-Node

Source Field

VS.RAB.MeanCellDCH.PS.Bgrd_DCH_HSDSCH.NbEvt

Source Section

FddCell

RABMeanCellDCHPSBgrd_EDCH_HSDSCHAvg

Mean number of PS RABs in Cell_DCH per traffic class (TC) split up per transport channel format. (Avg)

Data Source

RNC C-Node

Source Field

VS.RAB.MeanCellDCH.PS.Bgrd_EDCH_HSDSCH.Avg

Source Section

FddCell

RABMeanCellDCHPSBgrd_EDCH_HSDSCHCum

Mean number of PS RABs in Cell_DCH per traffic class (TC) split up per transport channel format. (Cum)

Data Source

RNC C-Node

Source Field

VS.RAB.MeanCellDCH.PS.Bgrd_EDCH_HSDSCH.Cum

© Copyright IBM Corp. 1999, 2009. All rights reserved.

Source Section

FddCell

RABMeanCellDCHPSBgrd_EDCH_HSDSCHMax

Mean number of PS RABs in Cell_DCH per traffic class (TC) split up per transport channel format. (Max)

Data Source

RNC C-Node

Source Field

VS.RAB.MeanCellDCH.PS.Bgrd_EDCH_HSDSCH.Max

Source Section

FddCell

RABMeanCellDCHPSBgrd_EDCH_HSDSCHMin

Mean number of PS RABs in Cell_DCH per traffic class (TC) split up per transport channel format. (Min)

Data Source

RNC C-Node

Source Field

VS.RAB.MeanCellDCH.PS.Bgrd_EDCH_HSDSCH.Min

Source Section

FddCell

RABMeanCellDCHPSBgrd_EDCH_HSDSCHNbEvt

Mean number of PS RABs in Cell_DCH per traffic class (TC) split up per transport channel format. (NbEvt)

Data Source

RNC C-Node

Source Field

VS.RAB.MeanCellDCH.PS.Bgrd_EDCH_HSDSCH.NbEvt

Source Section

FddCell

RABMeanCellDCHPSIntact_DCH_DCHAvg

Mean number of PS RABs in Cell_DCH per traffic class (TC) split up per transport channel format. (Avg)

Data Source

RNC C-Node

Source Field

VS.RAB.MeanCellDCH.PS.Intact_DCH_DCH.Avg

Source Section

FddCell

RABMeanCellDCHPSIntact_DCH_DCHCum

Mean number of PS RABs in Cell_DCH per traffic class (TC) split up per transport channel format. (Cum)

Data Source

RNC C-Node

Source Field

VS.RAB.MeanCellDCH.PS.Intact_DCH_DCH.Cum

Source Section

FddCell

RABMeanCellDCHPSIntact_DCH_DCHMax

Mean number of PS RABs in Cell_DCH per traffic class (TC) split up per transport channel format. (Max)

Data Source

RNC C-Node

Source Field

VS.RAB.MeanCellDCH.PS.Intact_DCH_DCH.Max

© Copyright IBM Corp. 1999, 2009. All rights reserved.

Source Section

FddCell

RABMeanCellDCHPSIntact_DCH_DCHMin

Mean number of PS RABs in Cell_DCH per traffic class (TC) split up per transport channel format. (Min)

Data Source

RNC C-Node

Source Field

VS.RAB.MeanCellDCH.PS.Intact_DCH_DCH.Min

Source Section

FddCell

RABMeanCellDCHPSIntact_DCH_DCHNbEvt

Mean number of PS RABs in Cell_DCH per traffic class (TC) split up per transport channel format. (NbEvt)

Data Source

RNC C-Node

Source Field

VS.RAB.MeanCellDCH.PS.Intact_DCH_DCH.NbEvt

Source Section

FddCell

RABMeanCellDCHPSIntact_DCH_HSDSCHAvg

Mean number of PS RABs in Cell_DCH per traffic class (TC) split up per transport channel format. (Avg)

Data Source

RNC C-Node

Source Field

VS.RAB.MeanCellDCH.PS.Intact_DCH_HSDSCH.Avg

Source Section

FddCell

RABMeanCellDCHPSIntact_DCH_HSDSCHCum

Mean number of PS RABs in Cell_DCH per traffic class (TC) split up per transport channel format. (Cum)

Data Source

RNC C-Node

Source Field

VS.RAB.MeanCellDCH.PS.Intact_DCH_HSDSCH.Cum

Source Section

FddCell

RABMeanCellDCHPSIntact_DCH_HSDSCHMax

Mean number of PS RABs in Cell_DCH per traffic class (TC) split up per transport channel format. (Max)

Data Source

RNC C-Node

Source Field

VS.RAB.MeanCellDCH.PS.Intact_DCH_HSDSCH.Max

Source Section

FddCell

RABMeanCellDCHPSIntact_DCH_HSDSCHMin

Mean number of PS RABs in Cell_DCH per traffic class (TC) split up per transport channel format. (Min)

Data Source

RNC C-Node

Source Field

VS.RAB.MeanCellDCH.PS.Intact_DCH_HSDSCH.Min

© Copyright IBM Corp. 1999, 2009. All rights reserved.

Source Section

FddCell

RABMeanCellDCHPSIntact_DCH_HSDSCHNbEvt

Mean number of PS RABs in Cell_DCH per traffic class (TC) split up per transport channel format. (NbEvt)

Data Source

RNC C-Node

Source Field

VS.RAB.MeanCellDCH.PS.Intact_DCH_HSDSCH.NbEvt

Source Section

FddCell

RABMeanCellDCHPSIntact_EDCH_HSDSCHAvg

Mean number of PS RABs in Cell_DCH per traffic class (TC) split up per transport channel format. (Avg)

Data Source

RNC C-Node

Source Field

VS.RAB.MeanCellDCH.PS.Intact_EDCH_HSDSCH.Avg

Source Section

FddCell

RABMeanCellDCHPSIntact_EDCH_HSDSCHCum

Mean number of PS RABs in Cell_DCH per traffic class (TC) split up per transport channel format. (Cum)

Data Source

RNC C-Node

Source Field

VS.RAB.MeanCellDCH.PS.Intact_EDCH_HSDSCH.Cum

Source Section

FddCell

RABMeanCellDCHPSIntact_EDCH_HSDSCHMax

Mean number of PS RABs in Cell_DCH per traffic class (TC) split up per transport channel format. (Max)

Data Source

RNC C-Node

Source Field

VS.RAB.MeanCellDCH.PS.Intact_EDCH_HSDSCH.Max

Source Section

FddCell

RABMeanCellDCHPSIntact_EDCH_HSDSCHMin

Mean number of PS RABs in Cell_DCH per traffic class (TC) split up per transport channel format. (Min)

Data Source

RNC C-Node

Source Field

VS.RAB.MeanCellDCH.PS.Intact_EDCH_HSDSCH.Min

Source Section

FddCell

RABMeanCellDCHPSIntact_EDCH_HSDSCHNbEvt

Mean number of PS RABs in Cell_DCH per traffic class (TC) split up per transport channel format. (NbEvt)

Data Source

RNC C-Node

Source Field

VS.RAB.MeanCellDCH.PS.Intact_EDCH_HSDSCH.NbEvt

© Copyright IBM Corp. 1999, 2009. All rights reserved.

Source Section

FddCell

RABMeanCellDCHPSMultiple1IB1S_DCH_DCHAvg

Provides the mean number of connections with the UE in Cell_DCH for a specific multi-RAB combination. (Avg)

Data Source

RNC C-Node

Source Field

VS.RAB.MeanCellDCH.PS.Multiple.1IB1S_DCH_DCH.Avg

Source Section

FddCell

RABMeanCellDCHPSMultiple1IB1S_DCH_DCHCum

Provides the mean number of connections with the UE in Cell_DCH for a specific multi-RAB combination. (Cum)

Data Source

RNC C-Node

Source Field

VS.RAB.MeanCellDCH.PS.Multiple.1IB1S_DCH_DCH.Cum

Source Section

FddCell

RABMeanCellDCHPSMultiple1IB1S_DCH_DCHMax

Provides the mean number of connections with the UE in Cell_DCH for a specific multi-RAB combination. (Max)

Data Source

RNC C-Node

Source Field

VS.RAB.MeanCellDCH.PS.Multiple.1IB1S_DCH_DCH.Max

Source Section

FddCell

RABMeanCellDCHPSMultiple1IB1S_DCH_DCHMin

Provides the mean number of connections with the UE in Cell_DCH for a specific multi-RAB combination. (Min)

Data Source

RNC C-Node

Source Field

VS.RAB.MeanCellDCH.PS.Multiple.1IB1S_DCH_DCH.Min

Source Section

FddCell

RABMeanCellDCHPSMultiple1IB1S_DCH_DCHNbEvt

Provides the mean number of connections with the UE in Cell_DCH for a specific multi-RAB combination. (NbEvt)

Data Source

RNC C-Node

Source Field

VS.RAB.MeanCellDCH.PS.Multiple.1IB1S_DCH_DCH.NbEvt

Source Section

FddCell

RABMeanCellDCHPSMultiple1IB1S_DCH_HSDSCHAvg

Provides the mean number of connections with the UE in Cell_DCH for a specific multi-RAB combination. (Avg)

Data Source

RNC C-Node

Source Field

VS.RAB.MeanCellDCH.PS.Multiple.1IB1S_DCH_HSDSCH.Avg

© Copyright IBM Corp. 1999, 2009. All rights reserved.

Source Section

FddCell

RABMeanCellDCHPSMultiple1IB1S_DCH_HSDSCHCum

Provides the mean number of connections with the UE in Cell_DCH for a specific multi-RAB combination. (Cum)

Data Source

RNC C-Node

Source Field

VS.RAB.MeanCellDCH.PS.Multiple.1IB1S_DCH_HSDSCH.Cum

Source Section

FddCell

RABMeanCellDCHPSMultiple1IB1S_DCH_HSDSCHMax

Provides the mean number of connections with the UE in Cell_DCH for a specific multi-RAB combination. (Max)

Data Source

RNC C-Node

Source Field

VS.RAB.MeanCellDCH.PS.Multiple.1IB1S_DCH_HSDSCH.Max

Source Section

FddCell

RABMeanCellDCHPSMultiple1IB1S_DCH_HSDSCHMin

Provides the mean number of connections with the UE in Cell_DCH for a specific multi-RAB combination. (Min)

Data Source

RNC C-Node

Source Field

VS.RAB.MeanCellDCH.PS.Multiple.1IB1S_DCH_HSDSCH.Min

Source Section

FddCell

RABMeanCellDCHPSMultiple1IB1S_DCH_HSDSCHNbEvt

Provides the mean number of connections with the UE in Cell_DCH for a specific multi-RAB combination. (NbEvt)

Data Source

RNC C-Node

Source Field

VS.RAB.MeanCellDCH.PS.Multiple.1IB1S_DCH_HSDSCH.NbEvt

Source Section

FddCell

RABMeanCellDCHPSMultiple2IB_DCH_DCHAvg

Provides the mean number of connections with the UE in Cell_DCH for a specific multi-RAB combination. (Avg)

Data Source

RNC C-Node

Source Field

VS.RAB.MeanCellDCH.PS.Multiple.2IB_DCH_DCH.Avg

Source Section

FddCell

RABMeanCellDCHPSMultiple2IB_DCH_DCHCum

Provides the mean number of connections with the UE in Cell_DCH for a specific multi-RAB combination. (Cum)

Data Source

RNC C-Node

Source Field

VS.RAB.MeanCellDCH.PS.Multiple.2IB_DCH_DCH.Cum

© Copyright IBM Corp. 1999, 2009. All rights reserved.

Source Section

FddCell

RABMeanCellDCHPSMultiple2IB_DCH_DCHMax

Provides the mean number of connections with the UE in Cell_DCH for a specific multi-RAB combination. (Max)

Data Source

RNC C-Node

Source Field

VS.RAB.MeanCellDCH.PS.Multiple.2IB_DCH_DCH.Max

Source Section

FddCell

RABMeanCellDCHPSMultiple2IB_DCH_DCHMin

Provides the mean number of connections with the UE in Cell_DCH for a specific multi-RAB combination. (Min)

Data Source

RNC C-Node

Source Field

VS.RAB.MeanCellDCH.PS.Multiple.2IB_DCH_DCH.Min

Source Section

FddCell

RABMeanCellDCHPSMultiple2IB_DCH_DCHNbEvt

Provides the mean number of connections with the UE in Cell_DCH for a specific multi-RAB combination. (NbEvt)

Data Source

RNC C-Node

Source Field

VS.RAB.MeanCellDCH.PS.Multiple.2IB_DCH_DCH.NbEvt

Source Section

FddCell

RABMeanCellDCHPSMultiple2IB_DCH_HSDSCHAvg

Provides the mean number of connections with the UE in Cell_DCH for a specific multi-RAB combination. (Avg)

Data Source

RNC C-Node

Source Field

VS.RAB.MeanCellDCH.PS.Multiple.2IB_DCH_HSDSCH.Avg

Source Section

FddCell

RABMeanCellDCHPSMultiple2IB_DCH_HSDSCHCum

Provides the mean number of connections with the UE in Cell_DCH for a specific multi-RAB combination. (Cum)

Data Source

RNC C-Node

Source Field

VS.RAB.MeanCellDCH.PS.Multiple.2IB_DCH_HSDSCH.Cum

Source Section

FddCell

RABMeanCellDCHPSMultiple2IB_DCH_HSDSCHMax

Provides the mean number of connections with the UE in Cell_DCH for a specific multi-RAB combination. (Max)

Data Source

RNC C-Node

Source Field

VS.RAB.MeanCellDCH.PS.Multiple.2IB_DCH_HSDSCH.Max

© Copyright IBM Corp. 1999, 2009. All rights reserved.

Source Section

FddCell

RABMeanCellDCHPSMultiple2IB_DCH_HSDSCHMin

Provides the mean number of connections with the UE in Cell_DCH for a specific multi-RAB combination. (Min)

Data Source

RNC C-Node

Source Field

VS.RAB.MeanCellDCH.PS.Multiple.2IB_DCH_HSDSCH.Min

Source Section

FddCell

RABMeanCellDCHPSMultiple2IB_DCH_HSDSCHNbEvt

Provides the mean number of connections with the UE in Cell_DCH for a specific multi-RAB combination. (NbEvt)

Data Source

RNC C-Node

Source Field

VS.RAB.MeanCellDCH.PS.Multiple.2IB_DCH_HSDSCH.NbEvt

Source Section

FddCell

RABMeanCellDCHPSMultiple2IB1S_DCH_DCHAvg

Provides the mean number of connections with the UE in Cell_DCH for a specific multi-RAB combination. (Avg)

Data Source

RNC C-Node

Source Field

VS.RAB.MeanCellDCH.PS.Multiple.2IB1S_DCH_DCH.Avg

Source Section

FddCell

RABMeanCellDCHPSMultiple2IB1S_DCH_DCHCum

Provides the mean number of connections with the UE in Cell_DCH for a specific multi-RAB combination. (Cum)

Data Source

RNC C-Node

Source Field

VS.RAB.MeanCellDCH.PS.Multiple.2IB1S_DCH_DCH.Cum

Source Section

FddCell

RABMeanCellDCHPSMultiple2IB1S_DCH_DCHMax

Provides the mean number of connections with the UE in Cell_DCH for a specific multi-RAB combination. (Max)

Data Source

RNC C-Node

Source Field

VS.RAB.MeanCellDCH.PS.Multiple.2IB1S_DCH_DCH.Max

Source Section

FddCell

RABMeanCellDCHPSMultiple2IB1S_DCH_DCHMin

Provides the mean number of connections with the UE in Cell_DCH for a specific multi-RAB combination. (Min)

Data Source

RNC C-Node

Source Field

VS.RAB.MeanCellDCH.PS.Multiple.2IB1S_DCH_DCH.Min

© Copyright IBM Corp. 1999, 2009. All rights reserved.

Source Section

FddCell

RABMeanCellDCHPSMultiple2IB1S_DCH_DCHNbEvt

Provides the mean number of connections with the UE in Cell_DCH for a specific multi-RAB combination. (NbEvt)

Data Source

RNC C-Node

Source Field

VS.RAB.MeanCellDCH.PS.Multiple.2IB1S_DCH_DCH.NbEvt

Source Section

FddCell

RABMeanCellDCHPSMultiple2IB1S_DCH_HSDSCHAvg

Provides the mean number of connections with the UE in Cell_DCH for a specific multi-RAB combination. (Avg)

Data Source

RNC C-Node

Source Field

VS.RAB.MeanCellDCH.PS.Multiple.2IB1S_DCH_HSDSCH.Avg

Source Section

FddCell

RABMeanCellDCHPSMultiple2IB1S_DCH_HSDSCHCum

Provides the mean number of connections with the UE in Cell_DCH for a specific multi-RAB combination. (Cum)

Data Source

RNC C-Node

Source Field

VS.RAB.MeanCellDCH.PS.Multiple.2IB1S_DCH_HSDSCH.Cum

Source Section

FddCell

RABMeanCellDCHPSMultiple2IB1S_DCH_HSDSCHMax

Provides the mean number of connections with the UE in Cell_DCH for a specific multi-RAB combination. (Max)

Data Source

RNC C-Node

Source Field

VS.RAB.MeanCellDCH.PS.Multiple.2IB1S_DCH_HSDSCH.Max

Source Section

FddCell

RABMeanCellDCHPSMultiple2IB1S_DCH_HSDSCHMin

Provides the mean number of connections with the UE in Cell_DCH for a specific multi-RAB combination. (Min)

Data Source

RNC C-Node

Source Field

VS.RAB.MeanCellDCH.PS.Multiple.2IB1S_DCH_HSDSCH.Min

Source Section

FddCell

RABMeanCellDCHPSMultiple2IB1S_DCH_HSDSCHNbEvt

Provides the mean number of connections with the UE in Cell_DCH for a specific multi-RAB combination. (NbEvt)

Data Source

RNC C-Node

Source Field

VS.RAB.MeanCellDCH.PS.Multiple.2IB1S_DCH_HSDSCH.NbEvt

© Copyright IBM Corp. 1999, 2009. All rights reserved.

Source Section

FddCell

RABMeanCellDCHPSMultiple3IB_DCH_DCHAvg

Provides the mean number of connections with the UE in Cell_DCH for a specific multi-RAB combination. (Avg)

Data Source

RNC C-Node

Source Field

VS.RAB.MeanCellDCH.PS.Multiple.3IB_DCH_DCH.Avg

Source Section

FddCell

RABMeanCellDCHPSMultiple3IB_DCH_DCHCum

Provides the mean number of connections with the UE in Cell_DCH for a specific multi-RAB combination. (Cum)

Data Source

RNC C-Node

Source Field

VS.RAB.MeanCellDCH.PS.Multiple.3IB_DCH_DCH.Cum

Source Section

FddCell

RABMeanCellDCHPSMultiple3IB_DCH_DCHMax

Provides the mean number of connections with the UE in Cell_DCH for a specific multi-RAB combination. (Max)

Data Source

RNC C-Node

Source Field

VS.RAB.MeanCellDCH.PS.Multiple.3IB_DCH_DCH.Max

Source Section

FddCell

RABMeanCellDCHPSMultiple3IB_DCH_DCHMin

Provides the mean number of connections with the UE in Cell_DCH for a specific multi-RAB combination. (Min)

Data Source

RNC C-Node

Source Field

VS.RAB.MeanCellDCH.PS.Multiple.3IB_DCH_DCH.Min

Source Section

FddCell

RABMeanCellDCHPSMultiple3IB_DCH_DCHNbEvt

Provides the mean number of connections with the UE in Cell_DCH for a specific multi-RAB combination. (NbEvt)

Data Source

RNC C-Node

Source Field

VS.RAB.MeanCellDCH.PS.Multiple.3IB_DCH_DCH.NbEvt

Source Section

FddCell

RABMeanCellDCHPSMultiple3IB_DCH_HSDSCHAvg

Provides the mean number of connections with the UE in Cell_DCH for a specific multi-RAB combination. (Avg)

Data Source

RNC C-Node

Source Field

VS.RAB.MeanCellDCH.PS.Multiple.3IB_DCH_HSDSCH.Avg

© Copyright IBM Corp. 1999, 2009. All rights reserved.

Source Section

FddCell

RABMeanCellDCHPSMultiple3IB_DCH_HSDSCHCum

Provides the mean number of connections with the UE in Cell_DCH for a specific multi-RAB combination. (Cum)

Data Source

RNC C-Node

Source Field

VS.RAB.MeanCellDCH.PS.Multiple.3IB_DCH_HSDSCH.Cum

Source Section

FddCell

RABMeanCellDCHPSMultiple3IB_DCH_HSDSCHMax

Provides the mean number of connections with the UE in Cell_DCH for a specific multi-RAB combination. (Max)

Data Source

RNC C-Node

Source Field

VS.RAB.MeanCellDCH.PS.Multiple.3IB_DCH_HSDSCH.Max

Source Section

FddCell

RABMeanCellDCHPSMultiple3IB_DCH_HSDSCHMin

Provides the mean number of connections with the UE in Cell_DCH for a specific multi-RAB combination. (Min)

Data Source

RNC C-Node

Source Field

VS.RAB.MeanCellDCH.PS.Multiple.3IB_DCH_HSDSCH.Min

Source Section

FddCell

RABMeanCellDCHPSMultiple3IB_DCH_HSDSCHNbEvt

Provides the mean number of connections with the UE in Cell_DCH for a specific multi-RAB combination. (NbEvt)

Data Source

RNC C-Node

Source Field

VS.RAB.MeanCellDCH.PS.Multiple.3IB_DCH_HSDSCH.NbEvt

Source Section

FddCell

RABMeanCellDCHPSMultipleOther_Multi_RAB_ComboAvg

Provides the mean number of connections with the UE in Cell_DCH for a specific multi-RAB combination. (Avg)

Data Source

RNC C-Node

Source Field

VS.RAB.MeanCellDCH.PS.Multiple.Other_Multi_RAB_Combo.Avg

Source Section

FddCell

RABMeanCellDCHPSMultipleOther_Multi_RAB_ComboCum

Provides the mean number of connections with the UE in Cell_DCH for a specific multi-RAB combination. (Cum)

Data Source

RNC C-Node

Source Field

VS.RAB.MeanCellDCH.PS.Multiple.Other_Multi_RAB_Combo.Cum

© Copyright IBM Corp. 1999, 2009. All rights reserved.

Source Section

FddCell

RABMeanCellDCHPSMultipleOther_Multi_RAB_ComboMax

Provides the mean number of connections with the UE in Cell_DCH for a specific multi-RAB combination. (Max)

Data Source

RNC C-Node

Source Field

VS.RAB.MeanCellDCH.PS.Multiple.Other_Multi_RAB_Combo.Max

Source Section

FddCell

RABMeanCellDCHPSMultipleOther_Multi_RAB_ComboMin

Provides the mean number of connections with the UE in Cell_DCH for a specific multi-RAB combination. (Min)

Data Source

RNC C-Node

Source Field

VS.RAB.MeanCellDCH.PS.Multiple.Other_Multi_RAB_Combo.Min

Source Section

FddCell

RABMeanCellDCHPSMultipleOther_Multi_RAB_ComboNbEvt

Provides the mean number of connections with the UE in Cell_DCH for a specific multi-RAB combination. (NbEvt)

Data Source

RNC C-Node

Source Field

VS.RAB.MeanCellDCH.PS.Multiple.Other_Multi_RAB_Combo.NbEvt

Source Section

FddCell

RABMeanCellDCHPSStrm_DCH_DCHAvg

Mean number of PS RABs in Cell_DCH per traffic class (TC) split up per transport channel format. (Avg)

Data Source

RNC C-Node

Source Field

VS.RAB.MeanCellDCH.PS.Strm_DCH_DCH.Avg

Source Section

FddCell

RABMeanCellDCHPSStrm_DCH_DCHCum

Mean number of PS RABs in Cell_DCH per traffic class (TC) split up per transport channel format. (Cum)

Data Source

RNC C-Node

Source Field

VS.RAB.MeanCellDCH.PS.Strm_DCH_DCH.Cum

Source Section

FddCell

RABMeanCellDCHPSStrm_DCH_DCHMax

Mean number of PS RABs in Cell_DCH per traffic class (TC) split up per transport channel format. (Max)

Data Source

RNC C-Node

Source Field

VS.RAB.MeanCellDCH.PS.Strm_DCH_DCH.Max

© Copyright IBM Corp. 1999, 2009. All rights reserved.

Source Section

FddCell

RABMeanCellDCHPSStrm_DCH_DCHMin

Mean number of PS RABs in Cell_DCH per traffic class (TC) split up per transport channel format. (Min)

Data Source

RNC C-Node

Source Field

VS.RAB.MeanCellDCH.PS.Strm_DCH_DCH.Min

Source Section

FddCell

RABMeanCellDCHPSStrm_DCH_DCHNbEvt

Mean number of PS RABs in Cell_DCH per traffic class (TC) split up per transport channel format. (NbEvt)

Data Source

RNC C-Node

Source Field

VS.RAB.MeanCellDCH.PS.Strm_DCH_DCH.NbEvt

Source Section

FddCell

RABMeanCellDCHPSStrm_DCH_HSDSCHAvg

Mean number of PS RABs in Cell_DCH per traffic class (TC) split up per transport channel format. (Avg)

Data Source

RNC C-Node

Source Field

VS.RAB.MeanCellDCH.PS.Strm_DCH_HSDSCH.Avg

Source Section

FddCell

RABMeanCellDCHPSStrm_DCH_HSDSCHCum

Mean number of PS RABs in Cell_DCH per traffic class (TC) split up per transport channel format. (Cum)

Data Source

RNC C-Node

Source Field

VS.RAB.MeanCellDCH.PS.Strm_DCH_HSDSCH.Cum

Source Section

FddCell

RABMeanCellDCHPSStrm_DCH_HSDSCHMax

Mean number of PS RABs in Cell_DCH per traffic class (TC) split up per transport channel format. (Max)

Data Source

RNC C-Node

Source Field

VS.RAB.MeanCellDCH.PS.Strm_DCH_HSDSCH.Max

Source Section

FddCell

RABMeanCellDCHPSStrm_DCH_HSDSCHMin

Mean number of PS RABs in Cell_DCH per traffic class (TC) split up per transport channel format. (Min)

Data Source

RNC C-Node

Source Field

VS.RAB.MeanCellDCH.PS.Strm_DCH_HSDSCH.Min

© Copyright IBM Corp. 1999, 2009. All rights reserved.

Source Section

FddCell

RABMeanCellDCHPSStrm_DCH_HSDSCHNbEvt

Mean number of PS RABs in Cell_DCH per traffic class (TC) split up per transport channel format. (NbEvt)

Data Source

RNC C-Node

Source Field

VS.RAB.MeanCellDCH.PS.Strm_DCH_HSDSCH.NbEvt

Source Section

FddCell

RABMeanCSVSumAvg

Mean number of successfully established CS voice RABs. The Erlang value can be derived from this counter. (Avg)

Data Source

RNC C-Node

Source Field

VS.RAB.Mean.CSV.Sum.Avg

Source Section

FddCell

RABMeanCSVSumCum

Mean number of successfully established CS voice RABs. The Erlang value can be derived from this counter. (Cum)

Data Source

RNC C-Node

Source Field

VS.RAB.Mean.CSV.Sum.Cum

Source Section

FddCell

RABMeanCSVSumMax

Mean number of successfully established CS voice RABs. The Erlang value can be derived from this counter. (Max)

Data Source

RNC C-Node

Source Field

VS.RAB.Mean.CSV.Sum.Max

Source Section

FddCell

RABMeanCSVSumMin

Mean number of successfully established CS voice RABs. The Erlang value can be derived from this counter. (Min)

Data Source

RNC C-Node

Source Field

VS.RAB.Mean.CSV.Sum.Min

Source Section

FddCell

RABMeanCSVSumNbEvt

Mean number of successfully established CS voice RABs. The Erlang value can be derived from this counter. (NbEvt)

Data Source

RNC C-Node

Source Field

VS.RAB.Mean.CSV.Sum.NbEvt

© Copyright IBM Corp. 1999, 2009. All rights reserved.

Source Section

FddCell

RABNegotAllowedRelocResAllocCellIntactBgrd

Number of Allowed RAB Negotiations for Relocation Resource Allocation per cell (IntactBgrd)

Data Source

RNC C-Node

Source Field

RAB.NegotAllowedRelocResAllocCell.IntactBgrd

Source Section

FddCell

RABNegotAllowedRelocResAllocCellStrm

Number of Allowed RAB Negotiations for Relocation Resource Allocation per cell (Strm)

Data Source

RNC C-Node

Source Field

RAB.NegotAllowedRelocResAllocCell.Strm

Source Section

FddCell

RABNegotApplRABAssignCellIntactBgrd

Number of Applied RAB Negotiations for RAB Assignment per cell (IntactBgrd)

Data Source

RNC C-Node

Source Field

RAB.NegotApplRABAssignCell.IntactBgrd

Source Section

FddCell

RABNegotApplRABAssignCellStrm

Number of Applied RAB Negotiations for RAB Assignment per cell (Strm)

Data Source

RNC C-Node

Source Field

RAB.NegotApplRABAssignCell.Strm

Source Section

FddCell

RABNegotApplRelocResAllocCellIntactBgrd

Number of Applied RAB Negotiations for Relocation Resource Allocation per cell (IntactBgrd)

Data Source

RNC C-Node

Source Field

RAB.NegotApplRelocResAllocCell.IntactBgrd

Source Section

FddCell

RABNegotApplRelocResAllocCellStrm

Number of Applied RAB Negotiations for Relocation Resource Allocation per cell (Strm)

Data Source

RNC C-Node

Source Field

RAB.NegotApplRelocResAllocCell.Strm

© Copyright IBM Corp. 1999, 2009. All rights reserved.

Source Section

FddCell

RABNegtAllowedRABAssignCellIntactBgrd

Number of Allowed RAB Negotiations for RAB Assignment Request per cell (IntactBgrd)

Data Source

RNC C-Node

Source Field

RAB.NegtAllowedRABAssignCell.IntactBgrd

Source Section

FddCell

RABNegtAllowedRABAssignCellStrm

Number of Allowed RAB Negotiations for RAB Assignment Request per cell (Strm)

Data Source

RNC C-Node

Source Field

RAB.NegtAllowedRABAssignCell.Strm

Source Section

FddCell

RabNormalRelPerGrantedRabTypeRefCellGrantedRabCsConv64

Number of normal RAB release per granted RAB type per reference cell (to map the RAB release with the RAB established). This counter should also be pegged in case the RNC releases RAB resources because the call has been relocated on another RNC or system (outgoing relocation). (GrantedRabCsConv64)

Data Source

RNC C-Node

Source Field

VS.RabNormalRelPerGrantedRabTypeRefCell.GrantedRabCsConv64

Source Section

FddCell

RabNormalRelPerGrantedRabTypeRefCellGrantedRabCSSpeechConv

Number of normal RAB release per granted RAB type per reference cell (to map the RAB release with the RAB established). This counter should also be pegged in case the RNC releases RAB resources because the call has been relocated on another RNC or system (outgoing relocation). (GrantedRabCSSpeechConv)

Data Source

RNC C-Node

Source Field

VS.RabNormalRelPerGrantedRabTypeRefCell.GrantedRabCSSpeechConv

Source Section

FddCell

RabNormalRelPerGrantedRabTypeRefCellGrantedRabCsStr

Number of normal RAB release per granted RAB type per reference cell (to map the RAB release with the RAB established). This counter should also be pegged in case the RNC releases RAB resources because the call has been relocated on another RNC or system (outgoing relocation). (GrantedRabCsStr)

Data Source

RNC C-Node

Source Field

VS.RabNormalRelPerGrantedRabTypeRefCell.GrantedRabCsStr

Source Section

FddCell

RabNormalRelPerGrantedRabTypeRefCellGrantedRabOther

Number of normal RAB release per granted RAB type per reference cell (to map the RAB release with the RAB established). This counter should also be pegged in case the RNC releases RAB resources because the call has been relocated on another RNC or system (outgoing relocation). (GrantedRabOther)

© Copyright IBM Corp. 1999, 2009. All rights reserved.

Data Source

RNC C-Node

Source Field

VS.RabNormalRelPerGrantedRabTypeRefCell.GrantedRabOther

Source Section

FddCell

RabNormalRelPerGrantedRabTypeRefCellGrantedRabPsHighRateBgnd

Number of normal RAB release per granted RAB type per reference cell (to map the RAB release with the RAB established). This counter should also be pegged in case the RNC releases RAB resources because the call has been relocated on another RNC or system (outgoing relocation). (GrantedRabPsHighRateBgnd)

Data Source

RNC C-Node

Source Field

VS.RabNormalRelPerGrantedRabTypeRefCell.GrantedRabPsHighRateBgnd

Source Section

FddCell

RabNormalRelPerGrantedRabTypeRefCellGrantedRabPsHighRateInter

Number of normal RAB release per granted RAB type per reference cell (to map the RAB release with the RAB established). This counter should also be pegged in case the RNC releases RAB resources because the call has been relocated on another RNC or system (outgoing relocation). (GrantedRabPsHighRateInter)

Data Source

RNC C-Node

Source Field

VS.RabNormalRelPerGrantedRabTypeRefCell.GrantedRabPsHighRateInter

Source Section

FddCell

RabNormalRelPerGrantedRabTypeRefCellGrantedRabPsLowRateBgnd

Number of normal RAB release per granted RAB type per reference cell (to map the RAB release with the RAB established). This counter should also be pegged in case the RNC releases RAB resources because the call has been relocated on another RNC or system (outgoing relocation). (GrantedRabPsLowRateBgnd)

Data Source

RNC C-Node

Source Field

VS.RabNormalRelPerGrantedRabTypeRefCell.GrantedRabPsLowRateBgnd

Source Section

FddCell

RabNormalRelPerGrantedRabTypeRefCellGrantedRabPsLowRateInter

Number of normal RAB release per granted RAB type per reference cell (to map the RAB release with the RAB established). This counter should also be pegged in case the RNC releases RAB resources because the call has been relocated on another RNC or system (outgoing relocation). (GrantedRabPsLowRateInter)

Data Source

RNC C-Node

Source Field

VS.RabNormalRelPerGrantedRabTypeRefCell.GrantedRabPsLowRateInter

Source Section

FddCell

RabNormalRelPerGrantedRabTypeRefCellGrantedRabPsStrHiRateStr

Number of normal RAB release per granted RAB type per reference cell (to map the RAB release with the RAB established). This counter should also be pegged in case the RNC releases RAB resources because the call has been relocated on another RNC or system (outgoing relocation). (GrantedRabPsStrHiRateStr)

Data Source

RNC C-Node

© Copyright IBM Corp. 1999, 2009. All rights reserved.

Source Field

VS.RabNormalRelPerGrantedRabTypeRefCell.GrantedRabPsStrHiRateStr

Source Section

FddCell

RabNormalRelPerGrantedRabTypeRefCellGrantedRabPsStrLowRateStr

Number of normal RAB release per granted RAB type per reference cell (to map the RAB release with the RAB established). This counter should also be pegged in case the RNC releases RAB resources because the call has been relocated on another RNC or system (outgoing relocation). (GrantedRabPsStrLowRateStr)

Data Source

RNC C-Node

Source Field

VS.RabNormalRelPerGrantedRabTypeRefCell.GrantedRabPsStrLowRateStr

Source Section

FddCell

RabOutgoingPerGrantedRabRefCellGrantedRabCsConv64

Number of times in which that cell stops being the reference cell with an active RAB. This counter takes into account the primary cell changes during SHO mobility and inter-frequency hard handovers (excluding HHO involving the core network) (GrantedRabCsConv64)

Data Source

RNC C-Node

Source Field

VS.RabOutgoingPerGrantedRabRefCell.GrantedRabCsConv64

Source Section

FddCell

RabOutgoingPerGrantedRabRefCellGrantedRabCSSpeechConv

Number of times in which that cell stops being the reference cell with an active RAB. This counter takes into account the primary cell changes during SHO mobility and inter-frequency hard handovers (excluding HHO involving the core network) (GrantedRabCSSpeechConv)

Data Source

RNC C-Node

Source Field

VS.RabOutgoingPerGrantedRabRefCell.GrantedRabCSSpeechConv

Source Section

FddCell

RabOutgoingPerGrantedRabRefCellGrantedRabCsStr

Number of times in which that cell stops being the reference cell with an active RAB. This counter takes into account the primary cell changes during SHO mobility and inter-frequency hard handovers (excluding HHO involving the core network) (GrantedRabCsStr)

Data Source

RNC C-Node

Source Field

VS.RabOutgoingPerGrantedRabRefCell.GrantedRabCsStr

Source Section

FddCell

RabOutgoingPerGrantedRabRefCellGrantedRabOther

Number of times in which that cell stops being the reference cell with an active RAB. This counter takes into account the primary cell changes during SHO mobility and inter-frequency hard handovers (excluding HHO involving the core network) (GrantedRabOther)

Data Source

RNC C-Node

Source Field

VS.RabOutgoingPerGrantedRabRefCell.GrantedRabOther

Source Section

FddCell

© Copyright IBM Corp. 1999, 2009. All rights reserved.

RabOutgoingPerGrantedRabRefCellGrantedRabPsHighRateBgnd

Number of times in which that cell stops being the reference cell with an active RAB. This counter takes into account the primary cell changes during SHO mobility and inter-frequency hard handovers (excluding HHO involving the core network) (GrantedRabPsHighRateBgnd)

Data Source

RNC C-Node

Source Field

VS.RabOutgoingPerGrantedRabRefCell.GrantedRabPsHighRateBgnd

Source Section

FddCell

RabOutgoingPerGrantedRabRefCellGrantedRabPsHighRateInter

Number of times in which that cell stops being the reference cell with an active RAB. This counter takes into account the primary cell changes during SHO mobility and inter-frequency hard handovers (excluding HHO involving the core network) (GrantedRabPsHighRateInter)

Data Source

RNC C-Node

Source Field

VS.RabOutgoingPerGrantedRabRefCell.GrantedRabPsHighRateInter

Source Section

FddCell

RabOutgoingPerGrantedRabRefCellGrantedRabPsLowRateBgnd

Number of times in which that cell stops being the reference cell with an active RAB. This counter takes into account the primary cell changes during SHO mobility and inter-frequency hard handovers (excluding HHO involving the core network) (GrantedRabPsLowRateBgnd)

Data Source

RNC C-Node

Source Field

VS.RabOutgoingPerGrantedRabRefCell.GrantedRabPsLowRateBgnd

Source Section

FddCell

RabOutgoingPerGrantedRabRefCellGrantedRabPsLowRateInter

Number of times in which that cell stops being the reference cell with an active RAB. This counter takes into account the primary cell changes during SHO mobility and inter-frequency hard handovers (excluding HHO involving the core network) (GrantedRabPsLowRateInter)

Data Source

RNC C-Node

Source Field

VS.RabOutgoingPerGrantedRabRefCell.GrantedRabPsLowRateInter

Source Section

FddCell

RabOutgoingPerGrantedRabRefCellGrantedRabPsStrHiRateStr

Number of times in which that cell stops being the reference cell with an active RAB. This counter takes into account the primary cell changes during SHO mobility and inter-frequency hard handovers (excluding HHO involving the core network) (GrantedRabPsStrHiRateStr)

Data Source

RNC C-Node

Source Field

VS.RabOutgoingPerGrantedRabRefCell.GrantedRabPsStrHiRateStr

Source Section

FddCell

RabOutgoingPerGrantedRabRefCellGrantedRabPsStrLowRateStr

Number of times in which that cell stops being the reference cell with an active RAB. This counter takes into account the primary cell changes during SHO mobility and inter-frequency hard handovers (excluding HHO involving the core network) (GrantedRabPsStrLowRateStr)

Data Source

RNC C-Node

© Copyright IBM Corp. 1999, 2009. All rights reserved.

Source Field

VS.RabOutgoingPerGrantedRabRefCell.GrantedRabPsStrLowRateStr

Source Section

FddCell

RabrReconfiCompl3Gto3GRelocCs

Number of RRC/Radio Bearer Reconfiguration complete received for 3G to 3G relocation purpose (Cs)

Data Source

RNC C-Node

Source Field

VS.RabrReconfiCompl3Gto3GReloc.Cs

Source Section

FddCell

RabrReconfiCompl3Gto3GRelocCsPs

Number of RRC/Radio Bearer Reconfiguration complete received for 3G to 3G relocation purpose (CsPs)

Data Source

RNC C-Node

Source Field

VS.RabrReconfiCompl3Gto3GReloc.CsPs

Source Section

FddCell

RabrReconfiCompl3Gto3GRelocPs

Number of RRC/Radio Bearer Reconfiguration complete received for 3G to 3G relocation purpose (Ps)

Data Source

RNC C-Node

Source Field

VS.RabrReconfiCompl3Gto3GReloc.Ps

Source Section

FddCell

RabRspMulMoCsResp

Number of RAB ASSIGNMENT RESPONSE messages sent related to the Multi-RAB Mobile Originating calls in CS core network domain. (Resp)

Data Source

RNC C-Node

Source Field

VS.RabRspMulMoCs.Resp

Source Section

FddCell

RabRspMulMoPsHSDPAPresv

Number of RAB ASSIGNMENT RESPONSE messages sent related to the Multi-RAB Mobile Originating calls in PS core network domain. (HSDPAPresv)

Data Source

RNC C-Node

Source Field

VS.RabRspMulMoPs.HSDPAPresv

Source Section

FddCell

RabRspMulMoPsHSDPAResp

Number of RAB ASSIGNMENT RESPONSE messages sent related to the Multi-RAB Mobile Originating calls in PS core network domain. (HSDPAResp)

Data Source

RNC C-Node

© Copyright IBM Corp. 1999, 2009. All rights reserved.

Source Field

VS.RabRspMulMoPs.HSDPAResp

Source Section

FddCell

RabRspMulMoPsPresv

Number of RAB ASSIGNMENT RESPONSE messages sent related to the Multi-RAB Mobile Originating calls in PS core network domain. (Presv)

Data Source

RNC C-Node

Source Field

VS.RabRspMulMoPs.Presv

Source Section

FddCell

RabRspMulMoPsResp

Number of RAB ASSIGNMENT RESPONSE messages sent related to the Multi-RAB Mobile Originating calls in PS core network domain. (Resp)

Data Source

RNC C-Node

Source Field

VS.RabRspMulMoPs.Resp

Source Section

FddCell

RabRspMulMtCsResp

Number of RAB ASSIGNMENT RESPONSE messages sent related to the Multi-RAB Mobile Terminating calls in CS core network domain. (Resp)

Data Source

RNC C-Node

Source Field

VS.RabRspMulMtCs.Resp

Source Section

FddCell

RabRspMulMtPsHSDPAPresv

Number of RAB ASSIGNMENT RESPONSE messages sent related to the Multi-RAB Mobile Terminating calls in PS core network domain. (HSDPAPresv)

Data Source

RNC C-Node

Source Field

VS.RabRspMulMtPs.HSDPAPresv

Source Section

FddCell

RabRspMulMtPsHSDPAResp

Number of RAB ASSIGNMENT RESPONSE messages sent related to the Multi-RAB Mobile Terminating calls in PS core network domain. (HSDPAResp)

Data Source

RNC C-Node

Source Field

VS.RabRspMulMtPs.HSDPAResp

Source Section

FddCell

RabRspMulMtPsPresv

Number of RAB ASSIGNMENT RESPONSE messages sent related to the Multi-RAB Mobile Terminating calls in PS core network domain. (Presv)

Data Source

RNC C-Node

© Copyright IBM Corp. 1999, 2009. All rights reserved.

Source Field

VS.RabRspMulMtPs.Presv

Source Section

FddCell

RabRspMulMtPsResp

Number of RAB ASSIGNMENT RESPONSE messages sent related to the Multi-RAB Mobile Terminating calls in PS core network domain. (Resp)

Data Source

RNC C-Node

Source Field

VS.RabRspMulMtPs.Resp

Source Section

FddCell

RabRspNorMoCsConvCirEtc

Number of RAB ASSIGNMENT RESPONSE messages sent related to the normal Mobile Originating calls in CS core network domain. (ConvCirEtc)

Data Source

RNC C-Node

Source Field

VS.RabRspNorMoCs.ConvCirEtc

Source Section

FddCell

RabRspNorMoCsConvVce

Number of RAB ASSIGNMENT RESPONSE messages sent related to the normal Mobile Originating calls in CS core network domain. (ConvVce)

Data Source

RNC C-Node

Source Field

VS.RabRspNorMoCs.ConvVce

Source Section

FddCell

RabRspNorMoCsEmr

Number of RAB ASSIGNMENT RESPONSE messages sent related to the normal Mobile Originating calls in CS core network domain. (Emr)

Data Source

RNC C-Node

Source Field

VS.RabRspNorMoCs.Emr

Source Section

FddCell

RabRspNorMoPsBgrd

Number of RAB ASSIGNMENT RESPONSE messages sent related to the normal Mobile Originating calls in PS core network domain. (Bgrd)

Data Source

RNC C-Node

Source Field

VS.RabRspNorMoPs.Bgrd

Source Section

FddCell

RabRspNorMoPsConv

Number of RAB ASSIGNMENT RESPONSE messages sent related to the normal Mobile Originating calls in PS core network domain. (Conv)

Data Source

RNC C-Node

© Copyright IBM Corp. 1999, 2009. All rights reserved.

Source Field

VS.RabRspNorMoPs.Conv

Source Section

FddCell

RabRspNorMoPsEmr

Number of RAB ASSIGNMENT RESPONSE messages sent related to the normal Mobile Originating calls in PS core network domain. (Emr)

Data Source

RNC C-Node

Source Field

VS.RabRspNorMoPs.Emr

Source Section

FddCell

RabRspNorMoPsHSDPABgrd

Number of RAB ASSIGNMENT RESPONSE messages sent related to the normal Mobile Originating calls in PS core network domain. (HSDPABgrd)

Data Source

RNC C-Node

Source Field

VS.RabRspNorMoPs.HSDPABgrd

Source Section

FddCell

RabRspNorMoPsHSDPAConv

Number of RAB ASSIGNMENT RESPONSE messages sent related to the normal Mobile Originating calls in PS core network domain. (HSDPAConv)

Data Source

RNC C-Node

Source Field

VS.RabRspNorMoPs.HSDPAConv

Source Section

FddCell

RabRspNorMoPsHSDPAEmr

Number of RAB ASSIGNMENT RESPONSE messages sent related to the normal Mobile Originating calls in PS core network domain. (HSDPAEmr)

Data Source

RNC C-Node

Source Field

VS.RabRspNorMoPs.HSDPAEmr

Source Section

FddCell

RabRspNorMoPsHSDPAIntact

Number of RAB ASSIGNMENT RESPONSE messages sent related to the normal Mobile Originating calls in PS core network domain. (HSDPAIntact)

Data Source

RNC C-Node

Source Field

VS.RabRspNorMoPs.HSDPAIntact

Source Section

FddCell

RabRspNorMoPsHSDPAPresv

Number of RAB ASSIGNMENT RESPONSE messages sent related to the normal Mobile Originating calls in PS core network domain. (HSDPAPresv)

Data Source

RNC C-Node

© Copyright IBM Corp. 1999, 2009. All rights reserved.

Source Field

VS.RabRspNorMoPs.HSDPAPresv

Source Section

FddCell

RabRspNorMoPsHSDPAStrm

Number of RAB ASSIGNMENT RESPONSE messages sent related to the normal Mobile Originating calls in PS core network domain. (HSDPAStrm)

Data Source

RNC C-Node

Source Field

VS.RabRspNorMoPs.HSDPAStrm

Source Section

FddCell

RabRspNorMoPsHSDPASubs

Number of RAB ASSIGNMENT RESPONSE messages sent related to the normal Mobile Originating calls in PS core network domain. (HSDPASubs)

Data Source

RNC C-Node

Source Field

VS.RabRspNorMoPs.HSDPASubs

Source Section

FddCell

RabRspNorMoPsIntact

Number of RAB ASSIGNMENT RESPONSE messages sent related to the normal Mobile Originating calls in PS core network domain. (Intact)

Data Source

RNC C-Node

Source Field

VS.RabRspNorMoPs.Intact

Source Section

FddCell

RabRspNorMoPsPresv

Number of RAB ASSIGNMENT RESPONSE messages sent related to the normal Mobile Originating calls in PS core network domain. (Presv)

Data Source

RNC C-Node

Source Field

VS.RabRspNorMoPs.Presv

Source Section

FddCell

RabRspNorMoPsStrm

Number of RAB ASSIGNMENT RESPONSE messages sent related to the normal Mobile Originating calls in PS core network domain. (Strm)

Data Source

RNC C-Node

Source Field

VS.RabRspNorMoPs.Strm

Source Section

FddCell

RabRspNorMoPsSubs

Number of RAB ASSIGNMENT RESPONSE messages sent related to the normal Mobile Originating calls in PS core network domain. (Subs)

Data Source

RNC C-Node

© Copyright IBM Corp. 1999, 2009. All rights reserved.

Source Field

VS.RabRspNorMoPs.Subs

Source Section

FddCell

RabRspNorMtCsConvCirEtc

Number of RAB ASSIGNMENT RESPONSE messages sent related to the normal Mobile Terminating calls in CS core network domain. (ConvCirEtc)

Data Source

RNC C-Node

Source Field

VS.RabRspNorMtCs.ConvCirEtc

Source Section

FddCell

RabRspNorMtCsConvVce

Number of RAB ASSIGNMENT RESPONSE messages sent related to the normal Mobile Terminating calls in CS core network domain. (ConvVce)

Data Source

RNC C-Node

Source Field

VS.RabRspNorMtCs.ConvVce

Source Section

FddCell

RabRspNorMtPsBgrd

Number of RAB ASSIGNMENT RESPONSE messages sent related to the normal Mobile Terminating calls in PS core network domain. (Bgrd)

Data Source

RNC C-Node

Source Field

VS.RabRspNorMtPs.Bgrd

Source Section

FddCell

RabRspNorMtPsConv

Number of RAB ASSIGNMENT RESPONSE messages sent related to the normal Mobile Terminating calls in PS core network domain. (Conv)

Data Source

RNC C-Node

Source Field

VS.RabRspNorMtPs.Conv

Source Section

FddCell

RabRspNorMtPsHSDPABgrd

Number of RAB ASSIGNMENT RESPONSE messages sent related to the normal Mobile Terminating calls in PS core network domain. (HSDPABgrd)

Data Source

RNC C-Node

Source Field

VS.RabRspNorMtPs.HSDPABgrd

Source Section

FddCell

RabRspNorMtPsHSDPAConv

Number of RAB ASSIGNMENT RESPONSE messages sent related to the normal Mobile Terminating calls in PS core network domain. (HSDPAConv)

Data Source

RNC C-Node

© Copyright IBM Corp. 1999, 2009. All rights reserved.

Source Field

VS.RabRspNorMtPs.HSDPAConv

Source Section

FddCell

RabRspNorMtPsHSDPAIntact

Number of RAB ASSIGNMENT RESPONSE messages sent related to the normal Mobile Terminating calls in PS core network domain. (HSDPAIntact)

Data Source

RNC C-Node

Source Field

VS.RabRspNorMtPs.HSDPAIntact

Source Section

FddCell

RabRspNorMtPsHSDPAPresv

Number of RAB ASSIGNMENT RESPONSE messages sent related to the normal Mobile Terminating calls in PS core network domain. (HSDPAPresv)

Data Source

RNC C-Node

Source Field

VS.RabRspNorMtPs.HSDPAPresv

Source Section

FddCell

RabRspNorMtPsHSDPAStrm

Number of RAB ASSIGNMENT RESPONSE messages sent related to the normal Mobile Terminating calls in PS core network domain. (HSDPAStrm)

Data Source

RNC C-Node

Source Field

VS.RabRspNorMtPs.HSDPAStrm

Source Section

FddCell

RabRspNorMtPsIntact

Number of RAB ASSIGNMENT RESPONSE messages sent related to the normal Mobile Terminating calls in PS core network domain. (Intact)

Data Source

RNC C-Node

Source Field

VS.RabRspNorMtPs.Intact

Source Section

FddCell

RabRspNorMtPsPresv

Number of RAB ASSIGNMENT RESPONSE messages sent related to the normal Mobile Terminating calls in PS core network domain. (Presv)

Data Source

RNC C-Node

Source Field

VS.RabRspNorMtPs.Presv

Source Section

FddCell

RabRspNorMtPsStrm

Number of RAB ASSIGNMENT RESPONSE messages sent related to the normal Mobile Terminating calls in PS core network domain. (Strm)

Data Source

RNC C-Node

© Copyright IBM Corp. 1999, 2009. All rights reserved.

Source Field

VS.RabRspNorMtPs.Strm

Source Section

FddCell

RABSuccEstabCSConv64

Successfully Completed CS RAB Establishments per CS RAB Id. This counter does not take into account RAB successfully established for incoming relocations. (Conv64)

Data Source

RNC C-Node

Source Field

RAB.SuccEstab.CS.Conv64

Source Section

FddCell

RABSuccEstabCSSpeechConv

Successfully Completed CS RAB Establishments per CS RAB Id. This counter does not take into account RAB successfully established for incoming relocations. (SpeechConv)

Data Source

RNC C-Node

Source Field

RAB.SuccEstab.CS.SpeechConv

Source Section

FddCell

RABSuccEstabCSStrm

Successfully Completed CS RAB Establishments per CS RAB Id. This counter does not take into account RAB successfully established for incoming relocations. (Strm)

Data Source

RNC C-Node

Source Field

RAB.SuccEstab.CS.Strm

Source Section

FddCell

RABSuccEstabCSVEC

This PM counts the number of Successful RAB Establishments for Emergency Calls. This PM is only applicable for Emergency Calls. (EC)

Data Source

RNC C-Node

Source Field

RAB.SuccEstabCSV.EC

Source Section

FddCell

RABSuccEstabCSVRelocIratHO

Successful CSV (voice/speech) RAB Establishment due to Relocation for Incoming Inter-RAT GSM to UMTS Handover. (RelocIratHO)

Data Source

RNC C-Node

Source Field

VS.RAB.SuccEstab.CSV.RelocIratHO

Source Section

FddCell

RABSuccEstabPSHighRateBgrd

Successfully Completed PS RAB Establishments per PS RAB Id. This counter does not take into account RAB successfully established for incoming relocations. (HighRateBgrd)

Data Source

RNC C-Node

© Copyright IBM Corp. 1999, 2009. All rights reserved.

Source Field

RAB.SuccEstab.PS.HighRateBgrd

Source Section

FddCell

RABSuccEstabPSHighRateIntact

Successfully Completed PS RAB Establishments per PS RAB Id. This counter does not take into account RAB successfully established for incoming relocations. (HighRateIntact)

Data Source

RNC C-Node

Source Field

RAB.SuccEstab.PS.HighRateIntact

Source Section

FddCell

RABSuccEstabPSHighRateStrm

Successfully Completed PS RAB Establishments per PS RAB Id. This counter does not take into account RAB successfully established for incoming relocations. (HighRateStrm)

Data Source

RNC C-Node

Source Field

RAB.SuccEstab.PS.HighRateStrm

Source Section

FddCell

RABSuccEstabPSLowRateBgrd

Successfully Completed PS RAB Establishments per PS RAB Id. This counter does not take into account RAB successfully established for incoming relocations. (LowRateBgrd)

Data Source

RNC C-Node

Source Field

RAB.SuccEstab.PS.LowRateBgrd

Source Section

FddCell

RABSuccEstabPSLowRateIntact

Successfully Completed PS RAB Establishments per PS RAB Id. This counter does not take into account RAB successfully established for incoming relocations. (LowRateIntact)

Data Source

RNC C-Node

Source Field

RAB.SuccEstab.PS.LowRateIntact

Source Section

FddCell

RABSuccEstabPSLowRateStrm

Successfully Completed PS RAB Establishments per PS RAB Id. This counter does not take into account RAB successfully established for incoming relocations. (LowRateStrm)

Data Source

RNC C-Node

Source Field

RAB.SuccEstab.PS.LowRateStrm

Source Section

FddCell

RABSuccEstabPSMultiple

Number of successful attempts to setup a PS "interactive" or "background" RAB on top of an existing PS "interactive" or "background" RAB for the same UE. (Multiple)

Data Source

RNC C-Node

© Copyright IBM Corp. 1999, 2009. All rights reserved.

Source Field

VS.RAB.SuccEstabPS.Multiple

Source Section

FddCell

RABSuccEstabPSReqNotGrantedDCH_HSDSCH_GrantedDCH_DCH

Successful RAB Establishments for service type PS data mapped on other UL and DL transport channel combination than the initially requested. (DCH_HSDSCH_GrantedDCH_DCH)

Data Source

RNC C-Node

Source Field

VS.RAB.SuccEstab.PS.ReqNotGranted.DCH_HSDSCH_GrantedDCH_DCH

Source Section

FddCell

RABSuccEstabPSReqNotGrantedEDCH_HSDSCH_GrantedDCH_DCH

Successful RAB Establishments for service type PS data mapped on other UL and DL transport channel combination than the initially requested. (EDCH_HSDSCH_GrantedDCH_DCH)

Data Source

RNC C-Node

Source Field

VS.RAB.SuccEstab.PS.ReqNotGranted.EDCH_HSDSCH_GrantedDCH_DCH

Source Section

FddCell

RABSuccEstabPSReqNotGrantedEDCH_HSDSCH_GrantedDCH_HSDSCH

Successful RAB Establishments for service type PS data mapped on other UL and DL transport channel combination than the initially requested. (EDCH_HSDSCH_GrantedDCH_HSDSCH)

Data Source

RNC C-Node

Source Field

VS.RAB.SuccEstab.PS.ReqNotGranted.EDCH_HSDSCH_GrantedDCH_HSDSCH

Source Section

FddCell

RABSuccEstabPSSum

Total Number of Successfully Completed PS RAB Establishments per PS RAB Id.

Data Source

RNC C-Node

Source Field

RAB.SuccEstab.PS.Sum

Source Section

FddCell

RABSuccEstabPSTrChnDCH_DCH

Successfully Completed PS RAB Establishments per transport channel format. This counter does not take into account RAB successfully established for incoming relocations. (DCH_DCH)

Data Source

RNC C-Node

Source Field

RAB.SuccEstab.PS.TrChn.DCH_DCH

Source Section

FddCell

RABSuccEstabPSTrChnDCH_HSDSCH

Successfully Completed PS RAB Establishments per transport channel format. This counter does not take into account RAB successfully established for incoming relocations. (DCH_HSDSCH)

Data Source

RNC C-Node

© Copyright IBM Corp. 1999, 2009. All rights reserved.

Source Field

RAB.SuccEstab.PS.TrChn.DCH_HSDSCH

Source Section

FddCell

RABSuccEstabPSTrChnEDCH_HSDSCH

Successfully Completed PS RAB Establishments per transport channel format. This counter does not take into account RAB successfully established for incoming relocations. (EDCH_HSDSCH)

Data Source

RNC C-Node

Source Field

RAB.SuccEstab.PS.TrChn.EDCH_HSDSCH

Source Section

FddCell

rac

Routing Area Code, RAC (Ref. 3GPP TS 23.003)

Data Source

OMC-U Bulk CM

Source Field

un:rac

Source Section

UtranCell

RACHcongestion

Percentage of time that the RACH is in congested state

Data Source

RNC

Source Field

VS.RACHcongestion

Source Section

Common Control Channel

RACHTransBlock_Bad

Number of RACH Transport Blocks received with bad CRC

Data Source

RNC

Source Field

VS.RACHTransBlock.Bad

Source Section

Common Control Channel

RACHTransBlock_Good

Number of RACH Transport Blocks received with good CRC

Data Source

RNC

Source Field

VS.RACHTransBlock.Good

Source Section

Common Control Channel

RadioBearerEstablishmentUnsuccess5Unused

Number of radio bearer setup not successfully established, with no RADIO_BEARER_SETUP_REQUEST sent.(based on procedure count, not RBs). Incremented based on reference cell (a) (5Unused)

Data Source

RNC C-Node

© Copyright IBM Corp. 1999, 2009. All rights reserved.

Source Field

VS.RadioBearerEstablishmentUnsuccess.5Unused

Source Section

FddCell

RadioBearerEstablishmentUnsuccessInvalidRabParametersValue

Number of radio bearer setup not successfully established, with no RADIO_BEARER_SETUP_REQUEST sent.(based on procedure count, not RBs). Incremented based on reference cell (a) (InvalidRabParametersValue)

Data Source

RNC C-Node

Source Field

VS.RadioBearerEstablishmentUnsuccess.InvalidRabParametersValue

Source Section

FddCell

RadioBearerEstablishmentUnsuccessLackBwthIu

Number of radio bearer setup not successfully established, with no RADIO_BEARER_SETUP_REQUEST sent.(based on procedure count, not RBs). Incremented based on reference cell (a) (LackBwthIu)

Data Source

RNC C-Node

Source Field

VS.RadioBearerEstablishmentUnsuccess.LackBwthIu

Source Section

FddCell

RadioBearerEstablishmentUnsuccessLackBwthIub

Number of radio bearer setup not successfully established, with no RADIO_BEARER_SETUP_REQUEST sent.(based on procedure count, not RBs). Incremented based on reference cell (a) (LackBwthIub)

Data Source

RNC C-Node

Source Field

VS.RadioBearerEstablishmentUnsuccess.LackBwthIub

Source Section

FddCell

RadioBearerEstablishmentUnsuccessLackBwthIur

Number of radio bearer setup not successfully established, with no RADIO_BEARER_SETUP_REQUEST sent.(based on procedure count, not RBs). Incremented based on reference cell (a) (LackBwthIur)

Data Source

RNC C-Node

Source Field

VS.RadioBearerEstablishmentUnsuccess.LackBwthIur

Source Section

FddCell

RadioBearerEstablishmentUnsuccessLackOfRncProcessingResources

Number of radio bearer setup not successfully established, with no RADIO_BEARER_SETUP_REQUEST sent.(based on procedure count, not RBs). Incremented based on reference cell (a) (LackOfRncProcessingResources)

Data Source

RNC C-Node

Source Field

VS.RadioBearerEstablishmentUnsuccess.LackOfRncProcessingResources

Source Section

FddCell

© Copyright IBM Corp. 1999, 2009. All rights reserved.

RadioBearerEstablishmentUnsuccessLackTransportIdIu

Number of radio bearer setup not successfully established, with no RADIO_BEARER_SETUP_REQUEST sent.(based on procedure count, not RBs). Incremented based on reference cell (a) (LackTransportIdIu)

Data Source

RNC C-Node

Source Field

VS.RadioBearerEstablishmentUnsuccess.LackTransportIdIu

Source Section

FddCell

RadioBearerEstablishmentUnsuccessLackTransportIdIub

Number of radio bearer setup not successfully established, with no RADIO_BEARER_SETUP_REQUEST sent.(based on procedure count, not RBs). Incremented based on reference cell (a) (LackTransportIdIub)

Data Source

RNC C-Node

Source Field

VS.RadioBearerEstablishmentUnsuccess.LackTransportIdIub

Source Section

FddCell

RadioBearerEstablishmentUnsuccessLackTransportIdIur

Number of radio bearer setup not successfully established, with no RADIO_BEARER_SETUP_REQUEST sent.(based on procedure count, not RBs). Incremented based on reference cell (a) (LackTransportIdIur)

Data Source

RNC C-Node

Source Field

VS.RadioBearerEstablishmentUnsuccess.LackTransportIdIur

Source Section

FddCell

RadioBearerEstablishmentUnsuccessNodeBCEMLackofL1Resource

Number of radio bearer setup not successfully established, with no RADIO_BEARER_SETUP_REQUEST sent.(based on procedure count, not RBs). Incremented based on reference cell (a) (NodeBCEMLackofL1Resource)

Data Source

RNC C-Node

Source Field

VS.RadioBearerEstablishmentUnsuccess.NodeBCEMLackofL1Resource

Source Section

FddCell

RadioBearerEstablishmentUnsuccessRlFailOrRlcErr

Number of radio bearer setup not successfully established, with no RADIO_BEARER_SETUP_REQUEST sent.(based on procedure count, not RBs). Incremented based on reference cell (a) (RlFailOrRlcErr)

Data Source

RNC C-Node

Source Field

VS.RadioBearerEstablishmentUnsuccess.RlFailOrRlcErr

Source Section

FddCell

RadioBearerEstablishmentUnsuccessUnavailableDlCodeResources

Number of radio bearer setup not successfully established, with no RADIO_BEARER_SETUP_REQUEST sent.(based on procedure count, not RBs). Incremented based on reference cell (a) (UnavailableDlCodeResources)

Data Source

RNC C-Node

© Copyright IBM Corp. 1999, 2009. All rights reserved.

Source Field

VS.RadioBearerEstablishmentUnsuccess.UnavailableDlCodeResources

Source Section

FddCell

RadioBearerEstablishmentUnsuccessUnavailableDlPowerResources

Number of radio bearer setup not successfully established, with no RADIO_BEARER_SETUP_REQUEST sent.(based on procedure count, not RBs). Incremented based on reference cell (a) (UnavailableDlPowerResources)

Data Source

RNC C-Node

Source Field

VS.RadioBearerEstablishmentUnsuccess.UnavailableDlPowerResources

Source Section

FddCell

RadioBearerEstablishmentUnsuccessUnspecified

Number of radio bearer setup not successfully established, with no RADIO_BEARER_SETUP_REQUEST sent.(based on procedure count, not RBs). Incremented based on reference cell (a) (Unspecified)

Data Source

RNC C-Node

Source Field

VS.RadioBearerEstablishmentUnsuccess.Unspecified

Source Section

FddCell

RadioBearerReconfigFailureCacRncProcRsrc

The number of Radio Bearers that failed to be reconfigured. (CacRncProcRsrc)

Data Source

RNC C-Node

Source Field

VS.RadioBearerReconfigFailure.CacRncProcRsrc

Source Section

FddCell

RadioBearerReconfigFailureLackBwIu

The number of Radio Bearers that failed to be reconfigured. (LackBwIu)

Data Source

RNC C-Node

Source Field

VS.RadioBearerReconfigFailure.LackBwIu

Source Section

FddCell

RadioBearerReconfigFailureLackBwIub

The number of Radio Bearers that failed to be reconfigured. (LackBwIub)

Data Source

RNC C-Node

Source Field

VS.RadioBearerReconfigFailure.LackBwIub

Source Section

FddCell

RadioBearerReconfigFailureLackBwIur

The number of Radio Bearers that failed to be reconfigured. (LackBwIur)

Data Source

RNC C-Node

Source Field

VS.RadioBearerReconfigFailure.LackBwIur

© Copyright IBM Corp. 1999, 2009. All rights reserved.

Source Section

FddCell

RadioBearerReconfigFailureNoDlCodeRsrc

The number of Radio Bearers that failed to be reconfigured. (NoDlCodeRsrc)

Data Source

RNC C-Node

Source Field

VS.RadioBearerReconfigFailure.NoDlCodeRsrc

Source Section

FddCell

RadioBearerReconfigFailureNoDlPwrRsrc

The number of Radio Bearers that failed to be reconfigured. (NoDlPwrRsrc)

Data Source

RNC C-Node

Source Field

VS.RadioBearerReconfigFailure.NoDlPwrRsrc

Source Section

FddCell

RadioBearerReconfigFailureUnspecified

The number of Radio Bearers that failed to be reconfigured. (Unspecified)

Data Source

RNC C-Node

Source Field

VS.RadioBearerReconfigFailure.Unspecified

Source Section

FddCell

RadioBearerReconfigurationSuccessRbCsData

Number of Radio Bearer reconfigure successfully. (RbCsData)

Data Source

RNC C-Node

Source Field

VS.RadioBearerReconfigurationSuccess.RbCsData

Source Section

FddCell

RadioBearerReconfigurationSuccessRbCsDataHsdpa

Number of Radio Bearer reconfigure successfully. (RbCsDataHsdpa)

Data Source

RNC C-Node

Source Field

VS.RadioBearerReconfigurationSuccess.RbCsDataHsdpa

Source Section

FddCell

RadioBearerReconfigurationSuccessRbCsDataPsDch

Number of Radio Bearer reconfigure successfully. (RbCsDataPsDch)

Data Source

RNC C-Node

Source Field

VS.RadioBearerReconfigurationSuccess.RbCsDataPsDch

Source Section

FddCell

RadioBearerReconfigurationSuccessRbCsSpeech

Number of Radio Bearer reconfigure successfully. (RbCsSpeech)

© Copyright IBM Corp. 1999, 2009. All rights reserved.

Data Source

RNC C-Node

Source Field

VS.RadioBearerReconfigurationSuccess.RbCsSpeech

Source Section

FddCell

RadioBearerReconfigurationSuccessRbCsSpeechPsDch

Number of Radio Bearer reconfigure successfully. (RbCsSpeechPsDch)

Data Source

RNC C-Node

Source Field

VS.RadioBearerReconfigurationSuccess.RbCsSpeechPsDch

Source Section

FddCell

RadioBearerReconfigurationSuccessRbCsSpeechPsDchHsdpa

Number of Radio Bearer reconfigure successfully. (RbCsSpeechPsDchHsdpa)

Data Source

RNC C-Node

Source Field

VS.RadioBearerReconfigurationSuccess.RbCsSpeechPsDchHsdpa

Source Section

FddCell

RadioBearerReconfigurationSuccessRbCsSpeechPsDchPsDch

Number of Radio Bearer reconfigure successfully. (RbCsSpeechPsDchPsDch)

Data Source

RNC C-Node

Source Field

VS.RadioBearerReconfigurationSuccess.RbCsSpeechPsDchPsDch

Source Section

FddCell

RadioBearerReconfigurationSuccessRbCsSpeechPsHsdpa

Number of Radio Bearer reconfigure successfully. (RbCsSpeechPsHsdpa)

Data Source

RNC C-Node

Source Field

VS.RadioBearerReconfigurationSuccess.RbCsSpeechPsHsdpa

Source Section

FddCell

RadioBearerReconfigurationSuccessRbCsStr

Number of Radio Bearer reconfigure successfully. (RbCsStr)

Data Source

RNC C-Node

Source Field

VS.RadioBearerReconfigurationSuccess.RbCsStr

Source Section

FddCell

RadioBearerReconfigurationSuccessRbPch

Number of Radio Bearer reconfigure successfully. (RbPch)

Data Source

RNC C-Node

Source Field

VS.RadioBearerReconfigurationSuccess.RbPch

© Copyright IBM Corp. 1999, 2009. All rights reserved.

Source Section

FddCell

RadioBearerReconfigurationSuccessRbPsDchDlDchUl

Number of Radio Bearer reconfigure successfully. (RbPsDchDlDchUl)

Data Source

RNC C-Node

Source Field

VS.RadioBearerReconfigurationSuccess.RbPsDchDlDchUl

Source Section

FddCell

RadioBearerReconfigurationSuccessRbPsDchPsDch

Number of Radio Bearer reconfigure successfully. (RbPsDchPsDch)

Data Source

RNC C-Node

Source Field

VS.RadioBearerReconfigurationSuccess.RbPsDchPsDch

Source Section

FddCell

RadioBearerReconfigurationSuccessRbPsDchPsHsdpa

Number of Radio Bearer reconfigure successfully. (RbPsDchPsHsdpa)

Data Source

RNC C-Node

Source Field

VS.RadioBearerReconfigurationSuccess.RbPsDchPsHsdpa

Source Section

FddCell

RadioBearerReconfigurationSuccessRbPsFach

Number of Radio Bearer reconfigure successfully. (RbPsFach)

Data Source

RNC C-Node

Source Field

VS.RadioBearerReconfigurationSuccess.RbPsFach

Source Section

FddCell

RadioBearerReconfigurationSuccessRbPsHsdpaDlDchEdchUl

Number of Radio Bearer reconfigure successfully. (RbPsHsdpaDlDchEdchUl)

Data Source

RNC C-Node

Source Field

VS.RadioBearerReconfigurationSuccess.RbPsHsdpaDlDchEdchUl

Source Section

FddCell

RadioBearerReconfigurationSuccessRbPsHsdpaDlDchUl

Number of Radio Bearer reconfigure successfully. (RbPsHsdpaDlDchUl)

Data Source

RNC C-Node

Source Field

VS.RadioBearerReconfigurationSuccess.RbPsHsdpaDlDchUl

Source Section

FddCell

RadioBearerReconfigurationSuccessRbPsHsdpaDlEdchUl

Number of Radio Bearer reconfigure successfully. (RbPsHsdpaDlEdchUl)

© Copyright IBM Corp. 1999, 2009. All rights reserved.

Data Source

RNC C-Node

Source Field

VS.RadioBearerReconfigurationSuccess.RbPsHsdpaDlEdchUl

Source Section

FddCell

RadioBearerReconfigurationSuccessRbReconfOther

Number of Radio Bearer reconfigure successfully. (RbReconfOther)

Data Source

RNC C-Node

Source Field

VS.RadioBearerReconfigurationSuccess.RbReconfOther

Source Section

FddCell

RadioBearerReconfigurationSuccessRbSignalling

Number of Radio Bearer reconfigure successfully. (RbSignalling)

Data Source

RNC C-Node

Source Field

VS.RadioBearerReconfigurationSuccess.RbSignalling

Source Section

FddCell

RadioBearerReconfigurationUnsuccessRadioBearerReconfigurationFailure

Number of radio bearer reconfiguration not successfully established. Only incremented when reference cell belongs to NeighbouringRnc (RadioBearerReconfigurationFailure)

Data Source

RNC C-Node

Source Field

VS.RadioBearerReconfigurationUnsuccess.RadioBearerReconfigurationFailure

Source Section

FddCell

RadioBearerReconfigurationUnsuccessTimeout

Number of radio bearer reconfiguration not successfully established. Only incremented when reference cell belongs to NeighbouringRnc (Timeout)

Data Source

RNC C-Node

Source Field

VS.RadioBearerReconfigurationUnsuccess.Timeout

Source Section

FddCell

RadioBearerReconfigureRequestRbCsData

Number of RB Reconfiguration decisions (that would lead to the emission of a RB Reconfiguration message, ie. incremented even if CAC rejects the reconfiguration). Incremented based on reference cell. (RbCsData)

Data Source

RNC C-Node

Source Field

VS.RadioBearerReconfigureRequest.RbCsData

Source Section

FddCell

© Copyright IBM Corp. 1999, 2009. All rights reserved.

RadioBearerReconfigureRequestRbCsDataHsdpa

Number of RB Reconfiguration decisions (that would lead to the emission of a RB Reconfiguration message, ie. incremented even if CAC rejects the reconfiguration). Incremented based on reference cell. (RbCsDataHsdpa)

Data Source

RNC C-Node

Source Field

VS.RadioBearerReconfigureRequest.RbCsDataHsdpa

Source Section

FddCell

RadioBearerReconfigureRequestRbCsDataPsDch

Number of RB Reconfiguration decisions (that would lead to the emission of a RB Reconfiguration message, ie. incremented even if CAC rejects the reconfiguration). Incremented based on reference cell. (RbCsDataPsDch)

Data Source

RNC C-Node

Source Field

VS.RadioBearerReconfigureRequest.RbCsDataPsDch

Source Section

FddCell

RadioBearerReconfigureRequestRbCsSpeech

Number of RB Reconfiguration decisions (that would lead to the emission of a RB Reconfiguration message, ie. incremented even if CAC rejects the reconfiguration). Incremented based on reference cell. (RbCsSpeech)

Data Source

RNC C-Node

Source Field

VS.RadioBearerReconfigureRequest.RbCsSpeech

Source Section

FddCell

RadioBearerReconfigureRequestRbCsSpeechPsDch

Number of RB Reconfiguration decisions (that would lead to the emission of a RB Reconfiguration message, ie. incremented even if CAC rejects the reconfiguration). Incremented based on reference cell. (RbCsSpeechPsDch)

Data Source

RNC C-Node

Source Field

VS.RadioBearerReconfigureRequest.RbCsSpeechPsDch

Source Section

FddCell

RadioBearerReconfigureRequestRbCsSpeechPsDchHsdpa

Number of RB Reconfiguration decisions (that would lead to the emission of a RB Reconfiguration message, ie. incremented even if CAC rejects the reconfiguration). Incremented based on reference cell. (RbCsSpeechPsDchHsdpa)

Data Source

RNC C-Node

Source Field

VS.RadioBearerReconfigureRequest.RbCsSpeechPsDchHsdpa

Source Section

FddCell

RadioBearerReconfigureRequestRbCsSpeechPsDchPsDch

Number of RB Reconfiguration decisions (that would lead to the emission of a RB Reconfiguration message, ie. incremented even if CAC rejects the reconfiguration). Incremented based on reference cell. (RbCsSpeechPsDchPsDch)

Data Source

RNC C-Node

© Copyright IBM Corp. 1999, 2009. All rights reserved.

Source Field

VS.RadioBearerReconfigureRequest.RbCsSpeechPsDchPsDch

Source Section

FddCell

RadioBearerReconfigureRequestRbCsSpeechPsHsdpa

Number of RB Reconfiguration decisions (that would lead to the emission of a RB Reconfiguration message, ie. incremented even if CAC rejects the reconfiguration). Incremented based on reference cell. (RbCsSpeechPsHsdpa)

Data Source

RNC C-Node

Source Field

VS.RadioBearerReconfigureRequest.RbCsSpeechPsHsdpa

Source Section

FddCell

RadioBearerReconfigureRequestRbCsStr

Number of RB Reconfiguration decisions (that would lead to the emission of a RB Reconfiguration message, ie. incremented even if CAC rejects the reconfiguration). Incremented based on reference cell. (RbCsStr)

Data Source

RNC C-Node

Source Field

VS.RadioBearerReconfigureRequest.RbCsStr

Source Section

FddCell

RadioBearerReconfigureRequestRbPch

Number of RB Reconfiguration decisions (that would lead to the emission of a RB Reconfiguration message, ie. incremented even if CAC rejects the reconfiguration). Incremented based on reference cell. (RbPch)

Data Source

RNC C-Node

Source Field

VS.RadioBearerReconfigureRequest.RbPch

Source Section

FddCell

RadioBearerReconfigureRequestRbPsDchDlDchUl

Number of RB Reconfiguration decisions (that would lead to the emission of a RB Reconfiguration message, ie. incremented even if CAC rejects the reconfiguration). Incremented based on reference cell. (RbPsDchDlDchUl)

Data Source

RNC C-Node

Source Field

VS.RadioBearerReconfigureRequest.RbPsDchDlDchUl

Source Section

FddCell

RadioBearerReconfigureRequestRbPsDchPsDch

Number of RB Reconfiguration decisions (that would lead to the emission of a RB Reconfiguration message, ie. incremented even if CAC rejects the reconfiguration). Incremented based on reference cell. (RbPsDchPsDch)

Data Source

RNC C-Node

Source Field

VS.RadioBearerReconfigureRequest.RbPsDchPsDch

Source Section

FddCell

© Copyright IBM Corp. 1999, 2009. All rights reserved.

RadioBearerReconfigureRequestRbPsDchPsHsdpa

Number of RB Reconfiguration decisions (that would lead to the emission of a RB Reconfiguration message, ie. incremented even if CAC rejects the reconfiguration). Incremented based on reference cell. (RbPsDchPsHsdpa)

Data Source

RNC C-Node

Source Field

VS.RadioBearerReconfigureRequest.RbPsDchPsHsdpa

Source Section

FddCell

RadioBearerReconfigureRequestRbPsFach

Number of RB Reconfiguration decisions (that would lead to the emission of a RB Reconfiguration message, ie. incremented even if CAC rejects the reconfiguration). Incremented based on reference cell. (RbPsFach)

Data Source

RNC C-Node

Source Field

VS.RadioBearerReconfigureRequest.RbPsFach

Source Section

FddCell

RadioBearerReconfigureRequestRbPsHsdpaDlDchEdchUl

Number of RB Reconfiguration decisions (that would lead to the emission of a RB Reconfiguration message, ie. incremented even if CAC rejects the reconfiguration). Incremented based on reference cell. (RbPsHsdpaDlDchEdchUl)

Data Source

RNC C-Node

Source Field

VS.RadioBearerReconfigureRequest.RbPsHsdpaDlDchEdchUl

Source Section

FddCell

RadioBearerReconfigureRequestRbPsHsdpaDlDchUl

Number of RB Reconfiguration decisions (that would lead to the emission of a RB Reconfiguration message, ie. incremented even if CAC rejects the reconfiguration). Incremented based on reference cell. (RbPsHsdpaDlDchUl)

Data Source

RNC C-Node

Source Field

VS.RadioBearerReconfigureRequest.RbPsHsdpaDlDchUl

Source Section

FddCell

RadioBearerReconfigureRequestRbPsHsdpaDlEdchUl

Number of RB Reconfiguration decisions (that would lead to the emission of a RB Reconfiguration message, ie. incremented even if CAC rejects the reconfiguration). Incremented based on reference cell. (RbPsHsdpaDlEdchUl)

Data Source

RNC C-Node

Source Field

VS.RadioBearerReconfigureRequest.RbPsHsdpaDlEdchUl

Source Section

FddCell

RadioBearerReconfigureRequestRbReconfOther

Number of RB Reconfiguration decisions (that would lead to the emission of a RB Reconfiguration message, ie. incremented even if CAC rejects the reconfiguration). Incremented based on reference cell. (RbReconfOther)

Data Source

RNC C-Node

© Copyright IBM Corp. 1999, 2009. All rights reserved.

Source Field

VS.RadioBearerReconfigureRequest.RbReconfOther

Source Section

FddCell

RadioBearerReconfigureRequestRbSignalling

Number of RB Reconfiguration decisions (that would lead to the emission of a RB Reconfiguration message, ie. incremented even if CAC rejects the reconfiguration). Incremented based on reference cell. (RbSignalling)

Data Source

RNC C-Node

Source Field

VS.RadioBearerReconfigureRequest.RbSignalling

Source Section

FddCell

RadioBearerReleaseSuccessSrcCallCsData

Number of Radio Bearer released successfully (SrcCallCsData)

Data Source

RNC C-Node

Source Field

VS.RadioBearerReleaseSuccess.SrcCallCsData

Source Section

FddCell

RadioBearerReleaseSuccessSrcCallCsSpeechNbLrAmr

Number of Radio Bearer released successfully (SrcCallCsSpeechNbLrAmr)

Data Source

RNC C-Node

Source Field

VS.RadioBearerReleaseSuccess.SrcCallCsSpeechNbLrAmr

Source Section

FddCell

RadioBearerReleaseSuccessSrcCallCsSpeechWbAmr

Number of Radio Bearer released successfully (SrcCallCsSpeechWbAmr)

Data Source

RNC C-Node

Source Field

VS.RadioBearerReleaseSuccess.SrcCallCsSpeechWbAmr

Source Section

FddCell

RadioBearerReleaseSuccessSrcCallCsStr

Number of Radio Bearer released successfully (SrcCallCsStr)

Data Source

RNC C-Node

Source Field

VS.RadioBearerReleaseSuccess.SrcCallCsStr

Source Section

FddCell

RadioBearerReleaseSuccessSrcCallHsdpaEdch

Number of Radio Bearer released successfully (SrcCallHsdpaEdch)

Data Source

RNC C-Node

Source Field

VS.RadioBearerReleaseSuccess.SrcCallHsdpaEdch

© Copyright IBM Corp. 1999, 2009. All rights reserved.

Source Section

FddCell

RadioBearerReleaseSuccessSrcCallHsdpaR99

Number of Radio Bearer released successfully (SrcCallHsdpaR99)

Data Source

RNC C-Node

Source Field

VS.RadioBearerReleaseSuccess.SrcCallHsdpaR99

Source Section

FddCell

RadioBearerReleaseSuccessSrcCallOther

Number of Radio Bearer released successfully (SrcCallOther)

Data Source

RNC C-Node

Source Field

VS.RadioBearerReleaseSuccess.SrcCallOther

Source Section

FddCell

RadioBearerReleaseSuccessSrcCallPsIb128

Number of Radio Bearer released successfully (SrcCallPsIb128)

Data Source

RNC C-Node

Source Field

VS.RadioBearerReleaseSuccess.SrcCallPsIb128

Source Section

FddCell

RadioBearerReleaseSuccessSrcCallPsIb256

Number of Radio Bearer released successfully (SrcCallPsIb256)

Data Source

RNC C-Node

Source Field

VS.RadioBearerReleaseSuccess.SrcCallPsIb256

Source Section

FddCell

RadioBearerReleaseSuccessSrcCallPsIb384

Number of Radio Bearer released successfully (SrcCallPsIb384)

Data Source

RNC C-Node

Source Field

VS.RadioBearerReleaseSuccess.SrcCallPsIb384

Source Section

FddCell

RadioBearerReleaseSuccessSrcCallPsIb64

Number of Radio Bearer released successfully (SrcCallPsIb64)

Data Source

RNC C-Node

Source Field

VS.RadioBearerReleaseSuccess.SrcCallPsIb64

Source Section

FddCell

RadioBearerReleaseSuccessSrcCallPsIbLt64

Number of Radio Bearer released successfully (SrcCallPsIbLt64)

© Copyright IBM Corp. 1999, 2009. All rights reserved.

Data Source

RNC C-Node

Source Field

VS.RadioBearerReleaseSuccess.SrcCallPsIbLt64

Source Section

FddCell

RadioBearerReleaseSuccessSrcCallPsStr128

Number of Radio Bearer released successfully (SrcCallPsStr128)

Data Source

RNC C-Node

Source Field

VS.RadioBearerReleaseSuccess.SrcCallPsStr128

Source Section

FddCell

RadioBearerReleaseSuccessSrcCallPsStr256

Number of Radio Bearer released successfully (SrcCallPsStr256)

Data Source

RNC C-Node

Source Field

VS.RadioBearerReleaseSuccess.SrcCallPsStr256

Source Section

FddCell

RadioBearerReleaseSuccessSrcCallPsStr384

Number of Radio Bearer released successfully (SrcCallPsStr384)

Data Source

RNC C-Node

Source Field

VS.RadioBearerReleaseSuccess.SrcCallPsStr384

Source Section

FddCell

RadioBearerReleaseSuccessSrcCallPsStr64

Number of Radio Bearer released successfully (SrcCallPsStr64)

Data Source

RNC C-Node

Source Field

VS.RadioBearerReleaseSuccess.SrcCallPsStr64

Source Section

FddCell

RadioBearerReleaseSuccessSrcCallPsStrLt64

Number of Radio Bearer released successfully (SrcCallPsStrLt64)

Data Source

RNC C-Node

Source Field

VS.RadioBearerReleaseSuccess.SrcCallPsStrLt64

Source Section

FddCell

RadioBearerReleaseSuccessSrcCallTrbFach

Number of Radio Bearer released successfully (SrcCallTrbFach)

Data Source

RNC C-Node

Source Field

VS.RadioBearerReleaseSuccess.SrcCallTrbFach

© Copyright IBM Corp. 1999, 2009. All rights reserved.

Source Section

FddCell

RadioBearerReleaseUnsuccessRadioBearerReleaseFailure

Number of radio bearer released unsuccessfully (RadioBearerReleaseFailure)

Data Source

RNC C-Node

Source Field

VS.RadioBearerReleaseUnsuccess.RadioBearerReleaseFailure

Source Section

FddCell

RadioBearerReleaseUnsuccessTimeout

Number of radio bearer released unsuccessfully (Timeout)

Data Source

RNC C-Node

Source Field

VS.RadioBearerReleaseUnsuccess.Timeout

Source Section

FddCell

RadioBearerSetupRequestTgtCallCsData

Number of Radio Bearer setup decisions (leading or not to a RB Setup, ie. Incremented even if CAC rejects the setup). The counter should be pegged multiple times for multiple RB to be setup in the same procedure. Incremented based on reference cell. (TgtCallCsData)

Data Source

RNC C-Node

Source Field

VS.RadioBearerSetupRequest.TgtCallCsData

Source Section

FddCell

RadioBearerSetupRequestTgtCallCsSpeechNbLrAmr

Number of Radio Bearer setup decisions (leading or not to a RB Setup, ie. Incremented even if CAC rejects the setup). The counter should be pegged multiple times for multiple RB to be setup in the same procedure. Incremented based on reference cell. (TgtCallCsSpeechNbLrAmr)

Data Source

RNC C-Node

Source Field

VS.RadioBearerSetupRequest.TgtCallCsSpeechNbLrAmr

Source Section

FddCell

RadioBearerSetupRequestTgtCallCsSpeechWbAmr

Number of Radio Bearer setup decisions (leading or not to a RB Setup, ie. Incremented even if CAC rejects the setup). The counter should be pegged multiple times for multiple RB to be setup in the same procedure. Incremented based on reference cell. (TgtCallCsSpeechWbAmr)

Data Source

RNC C-Node

Source Field

VS.RadioBearerSetupRequest.TgtCallCsSpeechWbAmr

Source Section

FddCell

RadioBearerSetupRequestTgtCallCsStr

Number of Radio Bearer setup decisions (leading or not to a RB Setup, ie. Incremented even if CAC rejects the setup). The counter should be pegged multiple times for multiple RB to be setup in the same procedure. Incremented based on reference cell. (TgtCallCsStr)

Data Source

RNC C-Node

© Copyright IBM Corp. 1999, 2009. All rights reserved.

Source Field

VS.RadioBearerSetupRequest.TgtCallCsStr

Source Section

FddCell

RadioBearerSetupRequestTgtCallHsdpaEdch

Number of Radio Bearer setup decisions (leading or not to a RB Setup, ie. Incremented even if CAC rejects the setup). The counter should be pegged multiple times for multiple RB to be setup in the same procedure. Incremented based on reference cell. (TgtCallHsdpaEdch)

Data Source

RNC C-Node

Source Field

VS.RadioBearerSetupRequest.TgtCallHsdpaEdch

Source Section

FddCell

RadioBearerSetupRequestTgtCallHsdpaR99

Number of Radio Bearer setup decisions (leading or not to a RB Setup, ie. Incremented even if CAC rejects the setup). The counter should be pegged multiple times for multiple RB to be setup in the same procedure. Incremented based on reference cell. (TgtCallHsdpaR99)

Data Source

RNC C-Node

Source Field

VS.RadioBearerSetupRequest.TgtCallHsdpaR99

Source Section

FddCell

RadioBearerSetupRequestTgtCallOther

Number of Radio Bearer setup decisions (leading or not to a RB Setup, ie. Incremented even if CAC rejects the setup). The counter should be pegged multiple times for multiple RB to be setup in the same procedure. Incremented based on reference cell. (TgtCallOther)

Data Source

RNC C-Node

Source Field

VS.RadioBearerSetupRequest.TgtCallOther

Source Section

FddCell

RadioBearerSetupRequestTgtCallPsIb128

Number of Radio Bearer setup decisions (leading or not to a RB Setup, ie. Incremented even if CAC rejects the setup). The counter should be pegged multiple times for multiple RB to be setup in the same procedure. Incremented based on reference cell. (TgtCallPsIb128)

Data Source

RNC C-Node

Source Field

VS.RadioBearerSetupRequest.TgtCallPsIb128

Source Section

FddCell

RadioBearerSetupRequestTgtCallPsIb256

Number of Radio Bearer setup decisions (leading or not to a RB Setup, ie. Incremented even if CAC rejects the setup). The counter should be pegged multiple times for multiple RB to be setup in the same procedure. Incremented based on reference cell. (TgtCallPsIb256)

Data Source

RNC C-Node

Source Field

VS.RadioBearerSetupRequest.TgtCallPsIb256

Source Section

FddCell

© Copyright IBM Corp. 1999, 2009. All rights reserved.

RadioBearerSetupRequestTgtCallPsIb384

Number of Radio Bearer setup decisions (leading or not to a RB Setup, ie. Incremented even if CAC rejects the setup). The counter should be pegged multiple times for multiple RB to be setup in the same procedure. Incremented based on reference cell. (TgtCallPsIb384)

Data Source

RNC C-Node

Source Field

VS.RadioBearerSetupRequest.TgtCallPsIb384

Source Section

FddCell

RadioBearerSetupRequestTgtCallPsIb64

Number of Radio Bearer setup decisions (leading or not to a RB Setup, ie. Incremented even if CAC rejects the setup). The counter should be pegged multiple times for multiple RB to be setup in the same procedure. Incremented based on reference cell. (TgtCallPsIb64)

Data Source

RNC C-Node

Source Field

VS.RadioBearerSetupRequest.TgtCallPsIb64

Source Section

FddCell

RadioBearerSetupRequestTgtCallPsIbLt64

Number of Radio Bearer setup decisions (leading or not to a RB Setup, ie. Incremented even if CAC rejects the setup). The counter should be pegged multiple times for multiple RB to be setup in the same procedure. Incremented based on reference cell. (TgtCallPsIbLt64)

Data Source

RNC C-Node

Source Field

VS.RadioBearerSetupRequest.TgtCallPsIbLt64

Source Section

FddCell

RadioBearerSetupRequestTgtCallPsStr128

Number of Radio Bearer setup decisions (leading or not to a RB Setup, ie. Incremented even if CAC rejects the setup). The counter should be pegged multiple times for multiple RB to be setup in the same procedure. Incremented based on reference cell. (TgtCallPsStr128)

Data Source

RNC C-Node

Source Field

VS.RadioBearerSetupRequest.TgtCallPsStr128

Source Section

FddCell

RadioBearerSetupRequestTgtCallPsStr256

Number of Radio Bearer setup decisions (leading or not to a RB Setup, ie. Incremented even if CAC rejects the setup). The counter should be pegged multiple times for multiple RB to be setup in the same procedure. Incremented based on reference cell. (TgtCallPsStr256)

Data Source

RNC C-Node

Source Field

VS.RadioBearerSetupRequest.TgtCallPsStr256

Source Section

FddCell

RadioBearerSetupRequestTgtCallPsStr384

Number of Radio Bearer setup decisions (leading or not to a RB Setup, ie. Incremented even if CAC rejects the setup). The counter should be pegged multiple times for multiple RB to be setup in the same procedure. Incremented based on reference cell. (TgtCallPsStr384)

Data Source

RNC C-Node

© Copyright IBM Corp. 1999, 2009. All rights reserved.

Source Field

VS.RadioBearerSetupRequest.TgtCallPsStr384

Source Section

FddCell

RadioBearerSetupRequestTgtCallPsStr64

Number of Radio Bearer setup decisions (leading or not to a RB Setup, ie. Incremented even if CAC rejects the setup). The counter should be pegged multiple times for multiple RB to be setup in the same procedure. Incremented based on reference cell. (TgtCallPsStr64)

Data Source

RNC C-Node

Source Field

VS.RadioBearerSetupRequest.TgtCallPsStr64

Source Section

FddCell

RadioBearerSetupRequestTgtCallPsStrLt64

Number of Radio Bearer setup decisions (leading or not to a RB Setup, ie. Incremented even if CAC rejects the setup). The counter should be pegged multiple times for multiple RB to be setup in the same procedure. Incremented based on reference cell. (TgtCallPsStrLt64)

Data Source

RNC C-Node

Source Field

VS.RadioBearerSetupRequest.TgtCallPsStrLt64

Source Section

FddCell

RadioBearerSetupSuccessTgtCallCsData

Number of Radio Bearer setup successfully. The counter should be pegged multiple times for multiple RB successfully setup in the same procedure. Incremented on the Reference cell of the call. (TgtCallCsData)

Data Source

RNC C-Node

Source Field

VS.RadioBearerSetupSuccess.TgtCallCsData

Source Section

FddCell

RadioBearerSetupSuccessTgtCallCsSpeechNbLrAmr

Number of Radio Bearer setup successfully. The counter should be pegged multiple times for multiple RB successfully setup in the same procedure. Incremented on the Reference cell of the call. (TgtCallCsSpeechNbLrAmr)

Data Source

RNC C-Node

Source Field

VS.RadioBearerSetupSuccess.TgtCallCsSpeechNbLrAmr

Source Section

FddCell

RadioBearerSetupSuccessTgtCallCsSpeechWbAmr

Number of Radio Bearer setup successfully. The counter should be pegged multiple times for multiple RB successfully setup in the same procedure. Incremented on the Reference cell of the call. (TgtCallCsSpeechWbAmr)

Data Source

RNC C-Node

Source Field

VS.RadioBearerSetupSuccess.TgtCallCsSpeechWbAmr

Source Section

FddCell

© Copyright IBM Corp. 1999, 2009. All rights reserved.

RadioBearerSetupSuccessTgtCallCsStr

Number of Radio Bearer setup successfully. The counter should be pegged multiple times for multiple RB successfully setup in the same procedure. Incremented on the Reference cell of the call. (TgtCallCsStr)

Data Source

RNC C-Node

Source Field

VS.RadioBearerSetupSuccess.TgtCallCsStr

Source Section

FddCell

RadioBearerSetupSuccessTgtCallHsdpaEdch

Number of Radio Bearer setup successfully. The counter should be pegged multiple times for multiple RB successfully setup in the same procedure. Incremented on the Reference cell of the call. (TgtCallHsdpaEdch)

Data Source

RNC C-Node

Source Field

VS.RadioBearerSetupSuccess.TgtCallHsdpaEdch

Source Section

FddCell

RadioBearerSetupSuccessTgtCallHsdpaR99

Number of Radio Bearer setup successfully. The counter should be pegged multiple times for multiple RB successfully setup in the same procedure. Incremented on the Reference cell of the call. (TgtCallHsdpaR99)

Data Source

RNC C-Node

Source Field

VS.RadioBearerSetupSuccess.TgtCallHsdpaR99

Source Section

FddCell

RadioBearerSetupSuccessTgtCallOther

Number of Radio Bearer setup successfully. The counter should be pegged multiple times for multiple RB successfully setup in the same procedure. Incremented on the Reference cell of the call. (TgtCallOther)

Data Source

RNC C-Node

Source Field

VS.RadioBearerSetupSuccess.TgtCallOther

Source Section

FddCell

RadioBearerSetupSuccessTgtCallPsIb128

Number of Radio Bearer setup successfully. The counter should be pegged multiple times for multiple RB successfully setup in the same procedure. Incremented on the Reference cell of the call. (TgtCallPsIb128)

Data Source

RNC C-Node

Source Field

VS.RadioBearerSetupSuccess.TgtCallPsIb128

Source Section

FddCell

RadioBearerSetupSuccessTgtCallPsIb256

Number of Radio Bearer setup successfully. The counter should be pegged multiple times for multiple RB successfully setup in the same procedure. Incremented on the Reference cell of the call. (TgtCallPsIb256)

Data Source

RNC C-Node

© Copyright IBM Corp. 1999, 2009. All rights reserved.

Source Field

VS.RadioBearerSetupSuccess.TgtCallPsIb256

Source Section

FddCell

RadioBearerSetupSuccessTgtCallPsIb384

Number of Radio Bearer setup successfully. The counter should be pegged multiple times for multiple RB successfully setup in the same procedure. Incremented on the Reference cell of the call. (TgtCallPsIb384)

Data Source

RNC C-Node

Source Field

VS.RadioBearerSetupSuccess.TgtCallPsIb384

Source Section

FddCell

RadioBearerSetupSuccessTgtCallPsIb64

Number of Radio Bearer setup successfully. The counter should be pegged multiple times for multiple RB successfully setup in the same procedure. Incremented on the Reference cell of the call. (TgtCallPsIb64)

Data Source

RNC C-Node

Source Field

VS.RadioBearerSetupSuccess.TgtCallPsIb64

Source Section

FddCell

RadioBearerSetupSuccessTgtCallPsIbLt64

Number of Radio Bearer setup successfully. The counter should be pegged multiple times for multiple RB successfully setup in the same procedure. Incremented on the Reference cell of the call. (TgtCallPsIbLt64)

Data Source

RNC C-Node

Source Field

VS.RadioBearerSetupSuccess.TgtCallPsIbLt64

Source Section

FddCell

RadioBearerSetupSuccessTgtCallPsStr128

Number of Radio Bearer setup successfully. The counter should be pegged multiple times for multiple RB successfully setup in the same procedure. Incremented on the Reference cell of the call. (TgtCallPsStr128)

Data Source

RNC C-Node

Source Field

VS.RadioBearerSetupSuccess.TgtCallPsStr128

Source Section

FddCell

RadioBearerSetupSuccessTgtCallPsStr256

Number of Radio Bearer setup successfully. The counter should be pegged multiple times for multiple RB successfully setup in the same procedure. Incremented on the Reference cell of the call. (TgtCallPsStr256)

Data Source

RNC C-Node

Source Field

VS.RadioBearerSetupSuccess.TgtCallPsStr256

Source Section

FddCell

© Copyright IBM Corp. 1999, 2009. All rights reserved.

RadioBearerSetupSuccessTgtCallPsStr384

Number of Radio Bearer setup successfully. The counter should be pegged multiple times for multiple RB successfully setup in the same procedure. Incremented on the Reference cell of the call. (TgtCallPsStr384)

Data Source

RNC C-Node

Source Field

VS.RadioBearerSetupSuccess.TgtCallPsStr384

Source Section

FddCell

RadioBearerSetupSuccessTgtCallPsStr64

Number of Radio Bearer setup successfully. The counter should be pegged multiple times for multiple RB successfully setup in the same procedure. Incremented on the Reference cell of the call. (TgtCallPsStr64)

Data Source

RNC C-Node

Source Field

VS.RadioBearerSetupSuccess.TgtCallPsStr64

Source Section

FddCell

RadioBearerSetupSuccessTgtCallPsStrLt64

Number of Radio Bearer setup successfully. The counter should be pegged multiple times for multiple RB successfully setup in the same procedure. Incremented on the Reference cell of the call. (TgtCallPsStrLt64)

Data Source

RNC C-Node

Source Field

VS.RadioBearerSetupSuccess.TgtCallPsStrLt64

Source Section

FddCell

RadioBearerSetupUnsuccessOther

Number of radio bearer setup not successfully established (based on procedure count, not RBs). Incremented for any cell of the active set. (Other)

Data Source

RNC C-Node

Source Field

VS.RadioBearerSetupUnsuccess.Other

Source Section

FddCell

RadioBearerSetupUnsuccessRadioBearerSetupFailure

Number of radio bearer setup not successfully established (based on procedure count, not RBs). Incremented for any cell of the active set. (RadioBearerSetupFailure)

Data Source

RNC C-Node

Source Field

VS.RadioBearerSetupUnsuccess.RadioBearerSetupFailure

Source Section

FddCell

RadioBearerSetupUnsuccessTimeout

Number of radio bearer setup not successfully established (based on procedure count, not RBs). Incremented for any cell of the active set. (Timeout)

Data Source

RNC C-Node

Source Field

VS.RadioBearerSetupUnsuccess.Timeout

© Copyright IBM Corp. 1999, 2009. All rights reserved.

Source Section

FddCell

RadioLinkAdditionRequestCsData

Number of internal events that would lead to a radio link addition request. (CsData)

Data Source

RNC C-Node

Source Field

VS.RadioLinkAdditionRequest.CsData

Source Section

FddCell

RadioLinkAdditionRequestCsDataPsDch

Number of internal events that would lead to a radio link addition request. (CsDataPsDch)

Data Source

RNC C-Node

Source Field

VS.RadioLinkAdditionRequest.CsDataPsDch

Source Section

FddCell

RadioLinkAdditionRequestCsDataPsHsdpa

Number of internal events that would lead to a radio link addition request. (CsDataPsHsdpa)

Data Source

RNC C-Node

Source Field

VS.RadioLinkAdditionRequest.CsDataPsHsdpa

Source Section

FddCell

RadioLinkAdditionRequestCsSpeech

Number of internal events that would lead to a radio link addition request. (CsSpeech)

Data Source

RNC C-Node

Source Field

VS.RadioLinkAdditionRequest.CsSpeech

Source Section

FddCell

RadioLinkAdditionRequestCsSpeechHsdpa

Number of internal events that would lead to a radio link addition request. (CsSpeechHsdpa)

Data Source

RNC C-Node

Source Field

VS.RadioLinkAdditionRequest.CsSpeechHsdpa

Source Section

FddCell

RadioLinkAdditionRequestCsSpeechPsDch

Number of internal events that would lead to a radio link addition request. (CsSpeechPsDch)

Data Source

RNC C-Node

Source Field

VS.RadioLinkAdditionRequest.CsSpeechPsDch

Source Section

FddCell

© Copyright IBM Corp. 1999, 2009. All rights reserved.

RadioLinkAdditionRequestCsSpeechPsDchPsDch

Number of internal events that would lead to a radio link addition request. (CsSpeechPsDchPsDch)

Data Source

RNC C-Node

Source Field

VS.RadioLinkAdditionRequest.CsSpeechPsDchPsDch

Source Section

FddCell

RadioLinkAdditionRequestCsSpeechPsDchPsHsdpa

Number of internal events that would lead to a radio link addition request. (CsSpeechPsDchPsHsdpa)

Data Source

RNC C-Node

Source Field

VS.RadioLinkAdditionRequest.CsSpeechPsDchPsHsdpa

Source Section

FddCell

RadioLinkAdditionRequestCsStr

Number of internal events that would lead to a radio link addition request. (CsStr)

Data Source

RNC C-Node

Source Field

VS.RadioLinkAdditionRequest.CsStr

Source Section

FddCell

RadioLinkAdditionRequestOther

Number of internal events that would lead to a radio link addition request. (Other)

Data Source

RNC C-Node

Source Field

VS.RadioLinkAdditionRequest.Other

Source Section

FddCell

RadioLinkAdditionRequestPsDchDlDchUl

Number of internal events that would lead to a radio link addition request. (PsDchDlDchUl)

Data Source

RNC C-Node

Source Field

VS.RadioLinkAdditionRequest.PsDchDlDchUl

Source Section

FddCell

RadioLinkAdditionRequestPsDchPsDch

Number of internal events that would lead to a radio link addition request. (PsDchPsDch)

Data Source

RNC C-Node

Source Field

VS.RadioLinkAdditionRequest.PsDchPsDch

Source Section

FddCell

RadioLinkAdditionRequestPsDchPsHsdpa

Number of internal events that would lead to a radio link addition request. (PsDchPsHsdpa)

© Copyright IBM Corp. 1999, 2009. All rights reserved.

Data Source

RNC C-Node

Source Field

VS.RadioLinkAdditionRequest.PsDchPsHsdpa

Source Section

FddCell

RadioLinkAdditionRequestPsHsdpaDchUl

Number of internal events that would lead to a radio link addition request. (PsHsdpaDchUl)

Data Source

RNC C-Node

Source Field

VS.RadioLinkAdditionRequest.PsHsdpaDchUl

Source Section

FddCell

RadioLinkAdditionRequestPsHsdpaDlDchEdchUl

Number of internal events that would lead to a radio link addition request. (PsHsdpaDlDchEdchUl)

Data Source

RNC C-Node

Source Field

VS.RadioLinkAdditionRequest.PsHsdpaDlDchEdchUl

Source Section

FddCell

RadioLinkAdditionRequestPsHsdpaDlEdchUl

Number of internal events that would lead to a radio link addition request. (PsHsdpaDlEdchUl)

Data Source

RNC C-Node

Source Field

VS.RadioLinkAdditionRequest.PsHsdpaDlEdchUl

Source Section

FddCell

RadioLinkAdditionRequestSig

Number of internal events that would lead to a radio link addition request. (Sig)

Data Source

RNC C-Node

Source Field

VS.RadioLinkAdditionRequest.Sig

Source Section

FddCell

RadioLinkAdditionSuccessCsData

Number of successful radio link addition (CsData)

Data Source

RNC C-Node

Source Field

VS.RadioLinkAdditionSuccess.CsData

Source Section

FddCell

RadioLinkAdditionSuccessCsDataPsDch

Number of successful radio link addition (CsDataPsDch)

Data Source

RNC C-Node

© Copyright IBM Corp. 1999, 2009. All rights reserved.

Source Field

VS.RadioLinkAdditionSuccess.CsDataPsDch

Source Section

FddCell

RadioLinkAdditionSuccessCsDataPsHsdpa

Number of successful radio link addition (CsDataPsHsdpa)

Data Source

RNC C-Node

Source Field

VS.RadioLinkAdditionSuccess.CsDataPsHsdpa

Source Section

FddCell

RadioLinkAdditionSuccessCsSpeech

Number of successful radio link addition (CsSpeech)

Data Source

RNC C-Node

Source Field

VS.RadioLinkAdditionSuccess.CsSpeech

Source Section

FddCell

RadioLinkAdditionSuccessCsSpeechHsdpa

Number of successful radio link addition (CsSpeechHsdpa)

Data Source

RNC C-Node

Source Field

VS.RadioLinkAdditionSuccess.CsSpeechHsdpa

Source Section

FddCell

RadioLinkAdditionSuccessCsSpeechPsDch

Number of successful radio link addition (CsSpeechPsDch)

Data Source

RNC C-Node

Source Field

VS.RadioLinkAdditionSuccess.CsSpeechPsDch

Source Section

FddCell

RadioLinkAdditionSuccessCsSpeechPsDchPsDch

Number of successful radio link addition (CsSpeechPsDchPsDch)

Data Source

RNC C-Node

Source Field

VS.RadioLinkAdditionSuccess.CsSpeechPsDchPsDch

Source Section

FddCell

RadioLinkAdditionSuccessCsSpeechPsDchPsHsdpa

Number of successful radio link addition (CsSpeechPsDchPsHsdpa)

Data Source

RNC C-Node

Source Field

VS.RadioLinkAdditionSuccess.CsSpeechPsDchPsHsdpa

Source Section

FddCell

© Copyright IBM Corp. 1999, 2009. All rights reserved.

RadioLinkAdditionSuccessCsStr

Number of successful radio link addition (CsStr)

Data Source

RNC C-Node

Source Field

VS.RadioLinkAdditionSuccess.CsStr

Source Section

FddCell

RadioLinkAdditionSuccessOther

Number of successful radio link addition (Other)

Data Source

RNC C-Node

Source Field

VS.RadioLinkAdditionSuccess.Other

Source Section

FddCell

RadioLinkAdditionSuccessPsDchDlDchUl

Number of successful radio link addition (PsDchDlDchUl)

Data Source

RNC C-Node

Source Field

VS.RadioLinkAdditionSuccess.PsDchDlDchUl

Source Section

FddCell

RadioLinkAdditionSuccessPsDchPsDch

Number of successful radio link addition (PsDchPsDch)

Data Source

RNC C-Node

Source Field

VS.RadioLinkAdditionSuccess.PsDchPsDch

Source Section

FddCell

RadioLinkAdditionSuccessPsDchPsHsdpa

Number of successful radio link addition (PsDchPsHsdpa)

Data Source

RNC C-Node

Source Field

VS.RadioLinkAdditionSuccess.PsDchPsHsdpa

Source Section

FddCell

RadioLinkAdditionSuccessPsHsdpaDchUl

Number of successful radio link addition (PsHsdpaDchUl)

Data Source

RNC C-Node

Source Field

VS.RadioLinkAdditionSuccess.PsHsdpaDchUl

Source Section

FddCell

RadioLinkAdditionSuccessPsHsdpaDlDchEdchUl

Number of successful radio link addition (PsHsdpaDlDchEdchUl)

Data Source

RNC C-Node

© Copyright IBM Corp. 1999, 2009. All rights reserved.

Source Field

VS.RadioLinkAdditionSuccess.PsHsdpaDlDchEdchUl

Source Section

FddCell

RadioLinkAdditionSuccessPsHsdpaDlEdchUl

Number of successful radio link addition (PsHsdpaDlEdchUl)

Data Source

RNC C-Node

Source Field

VS.RadioLinkAdditionSuccess.PsHsdpaDlEdchUl

Source Section

FddCell

RadioLinkAdditionSuccessSig

Number of successful radio link addition (Sig)

Data Source

RNC C-Node

Source Field

VS.RadioLinkAdditionSuccess.Sig

Source Section

FddCell

RadioLinkAdditionUnsuccessINodeRefusal

Number of unsuccessful radio link addition (INodeRefusal)

Data Source

RNC C-Node

Source Field

VS.RadioLinkAdditionUnsuccess.INodeRefusal

Source Section

FddCell

RadioLinkAdditionUnsuccessIubLayerCongestion

Number of unsuccessful radio link addition (IubLayerCongestion)

Data Source

RNC C-Node

Source Field

VS.RadioLinkAdditionUnsuccess.IubLayerCongestion

Source Section

FddCell

RadioLinkAdditionUnsuccessLackBwthIub

Number of unsuccessful radio link addition (LackBwthIub)

Data Source

RNC C-Node

Source Field

VS.RadioLinkAdditionUnsuccess.LackBwthIub

Source Section

FddCell

RadioLinkAdditionUnsuccessLackCidOrUdpPortIub

Number of unsuccessful radio link addition (LackCidOrUdpPortIub)

Data Source

RNC C-Node

Source Field

VS.RadioLinkAdditionUnsuccess.LackCidOrUdpPortIub

Source Section

FddCell

© Copyright IBM Corp. 1999, 2009. All rights reserved.

RadioLinkAdditionUnsuccessNodeBCEMLackL1Rsrc

Number of unsuccessful radio link addition (NodeBCEMLackL1Rsrc)

Data Source

RNC C-Node

Source Field

VS.RadioLinkAdditionUnsuccess.NodeBCEMLackL1Rsrc

Source Section

FddCell

RadioLinkAdditionUnsuccessNodeBOutOfOrder

Number of unsuccessful radio link addition (NodeBOutOfOrder)

Data Source

RNC C-Node

Source Field

VS.RadioLinkAdditionUnsuccess.NodeBOutOfOrder

Source Section

FddCell

RadioLinkAdditionUnsuccessRadioLinkAdditionFailure

Number of unsuccessful radio link addition (RadioLinkAdditionFailure)

Data Source

RNC C-Node

Source Field

VS.RadioLinkAdditionUnsuccess.RadioLinkAdditionFailure

Source Section

FddCell

RadioLinkAdditionUnsuccessRrmRefusal

Number of unsuccessful radio link addition (RrmRefusal)

Data Source

RNC C-Node

Source Field

VS.RadioLinkAdditionUnsuccess.RrmRefusal

Source Section

FddCell

RadioLinkAdditionUnsuccessTimeout

Number of unsuccessful radio link addition (Timeout)

Data Source

RNC C-Node

Source Field

VS.RadioLinkAdditionUnsuccess.Timeout

Source Section

FddCell

RadioLinkDeletionSuccess

Number of successful radio link deletion (RadioLinkDeletionSuccess)

Data Source

RNC C-Node

Source Field

VS.RadioLinkDeletionSuccess

Source Section

FddCell

RadioLinkDeletionUnsuccess

Number of unsuccessful radio link deletion (RadioLinkDeletionUnsuccess)

Data Source

RNC C-Node

© Copyright IBM Corp. 1999, 2009. All rights reserved.

Source Field

VS.RadioLinkDeletionUnsuccess

Source Section

FddCell

RadioLinkDroppedLastRadioLinkDlAsCnfCsData

Number of calls that have been dropped because the last RL of the Active Set has failed. (DlAsCnfCsData)

Data Source

RNC C-Node

Source Field

VS.RadioLinkDroppedLastRadioLink.DlAsCnfCsData

Source Section

FddCell

RadioLinkDroppedLastRadioLinkDlAsCnfCsSpeechNbLrAmr

Number of calls that have been dropped because the last RL of the Active Set has failed. (DlAsCnfCsSpeechNbLrAmr)

Data Source

RNC C-Node

Source Field

VS.RadioLinkDroppedLastRadioLink.DlAsCnfCsSpeechNbLrAmr

Source Section

FddCell

RadioLinkDroppedLastRadioLinkDlAsCnfCsSpeechWbAmr

Number of calls that have been dropped because the last RL of the Active Set has failed. (DlAsCnfCsSpeechWbAmr)

Data Source

RNC C-Node

Source Field

VS.RadioLinkDroppedLastRadioLink.DlAsCnfCsSpeechWbAmr

Source Section

FddCell

RadioLinkDroppedLastRadioLinkDlAsCnfCsStr

Number of calls that have been dropped because the last RL of the Active Set has failed. (DlAsCnfCsStr)

Data Source

RNC C-Node

Source Field

VS.RadioLinkDroppedLastRadioLink.DlAsCnfCsStr

Source Section

FddCell

RadioLinkDroppedLastRadioLinkDlAsCnfHsdpaDch

Number of calls that have been dropped because the last RL of the Active Set has failed. (DlAsCnfHsdpaDch)

Data Source

RNC C-Node

Source Field

VS.RadioLinkDroppedLastRadioLink.DlAsCnfHsdpaDch

Source Section

FddCell

RadioLinkDroppedLastRadioLinkDlAsCnfHsdpaEdch

Number of calls that have been dropped because the last RL of the Active Set has failed. (DlAsCnfHsdpaEdch)

Data Source

RNC C-Node

© Copyright IBM Corp. 1999, 2009. All rights reserved.

Source Field

VS.RadioLinkDroppedLastRadioLink.DlAsCnfHsdpaEdch

Source Section

FddCell

RadioLinkDroppedLastRadioLinkDlAsCnfOther

Number of calls that have been dropped because the last RL of the Active Set has failed. (DlAsCnfOther)

Data Source

RNC C-Node

Source Field

VS.RadioLinkDroppedLastRadioLink.DlAsCnfOther

Source Section

FddCell

RadioLinkDroppedLastRadioLinkDlAsCnfPsIbPsStr

Number of calls that have been dropped because the last RL of the Active Set has failed. (DlAsCnfPsIbPsStr)

Data Source

RNC C-Node

Source Field

VS.RadioLinkDroppedLastRadioLink.DlAsCnfPsIbPsStr

Source Section

FddCell

RadioLinkDroppedLastRadioLinkDlAsCnfSig

Number of calls that have been dropped because the last RL of the Active Set has failed. (DlAsCnfSig)

Data Source

RNC C-Node

Source Field

VS.RadioLinkDroppedLastRadioLink.DlAsCnfSig

Source Section

FddCell

RadioLinkEstablishedPerCellCsDataAvg

Indicates an average of the number of radio link established per cell, based on time average over collection period (CsDataAvg)

Data Source

RNC C-Node

Source Field

VS.RadioLinkEstablishedPerCell.CsData.Avg

Source Section

FddCell

RadioLinkEstablishedPerCellCsDataCum

Indicates an average of the number of radio link established per cell, based on time average over collection period (CsDataCum)

Data Source

RNC C-Node

Source Field

VS.RadioLinkEstablishedPerCell.CsData.Cum

Source Section

FddCell

RadioLinkEstablishedPerCellCsDataMax

Indicates an average of the number of radio link established per cell, based on time average over collection period (CsDataMax)

Data Source

RNC C-Node

© Copyright IBM Corp. 1999, 2009. All rights reserved.

Source Field

VS.RadioLinkEstablishedPerCell.CsData.Max

Source Section

FddCell

RadioLinkEstablishedPerCellCsDataMin

Indicates an average of the number of radio link established per cell, based on time average over collection period (CsDataMin)

Data Source

RNC C-Node

Source Field

VS.RadioLinkEstablishedPerCell.CsData.Min

Source Section

FddCell

RadioLinkEstablishedPerCellCsDataNbEvt

Indicates an average of the number of radio link established per cell, based on time average over collection period (CsDataNbEvt)

Data Source

RNC C-Node

Source Field

VS.RadioLinkEstablishedPerCell.CsData.NbEvt

Source Section

FddCell

RadioLinkEstablishedPerCellCsDataPsDchAvg

Indicates an average of the number of radio link established per cell, based on time average over collection period (CsDataPsDchAvg)

Data Source

RNC C-Node

Source Field

VS.RadioLinkEstablishedPerCell.CsDataPsDch.Avg

Source Section

FddCell

RadioLinkEstablishedPerCellCsDataPsDchCum

Indicates an average of the number of radio link established per cell, based on time average over collection period (CsDataPsDchCum)

Data Source

RNC C-Node

Source Field

VS.RadioLinkEstablishedPerCell.CsDataPsDch.Cum

Source Section

FddCell

RadioLinkEstablishedPerCellCsDataPsDchMax

Indicates an average of the number of radio link established per cell, based on time average over collection period (CsDataPsDchMax)

Data Source

RNC C-Node

Source Field

VS.RadioLinkEstablishedPerCell.CsDataPsDch.Max

Source Section

FddCell

RadioLinkEstablishedPerCellCsDataPsDchMin

Indicates an average of the number of radio link established per cell, based on time average over collection period (CsDataPsDchMin)

Data Source

RNC C-Node

© Copyright IBM Corp. 1999, 2009. All rights reserved.

Source Field

VS.RadioLinkEstablishedPerCell.CsDataPsDch.Min

Source Section

FddCell

RadioLinkEstablishedPerCellCsDataPsDchNbEvt

Indicates an average of the number of radio link established per cell, based on time average over collection period (CsDataPsDchNbEvt)

Data Source

RNC C-Node

Source Field

VS.RadioLinkEstablishedPerCell.CsDataPsDch.NbEvt

Source Section

FddCell

RadioLinkEstablishedPerCellCsDataPsHsdpaAvg

Indicates an average of the number of radio link established per cell, based on time average over collection period (CsDataPsHsdpaAvg)

Data Source

RNC C-Node

Source Field

VS.RadioLinkEstablishedPerCell.CsDataPsHsdpa.Avg

Source Section

FddCell

RadioLinkEstablishedPerCellCsDataPsHsdpaCum

Indicates an average of the number of radio link established per cell, based on time average over collection period (CsDataPsHsdpaCum)

Data Source

RNC C-Node

Source Field

VS.RadioLinkEstablishedPerCell.CsDataPsHsdpa.Cum

Source Section

FddCell

RadioLinkEstablishedPerCellCsDataPsHsdpaMax

Indicates an average of the number of radio link established per cell, based on time average over collection period (CsDataPsHsdpaMax)

Data Source

RNC C-Node

Source Field

VS.RadioLinkEstablishedPerCell.CsDataPsHsdpa.Max

Source Section

FddCell

RadioLinkEstablishedPerCellCsDataPsHsdpaMin

Indicates an average of the number of radio link established per cell, based on time average over collection period (CsDataPsHsdpaMin)

Data Source

RNC C-Node

Source Field

VS.RadioLinkEstablishedPerCell.CsDataPsHsdpa.Min

Source Section

FddCell

RadioLinkEstablishedPerCellCsDataPsHsdpaNbEvt

Indicates an average of the number of radio link established per cell, based on time average over collection period (CsDataPsHsdpaNbEvt)

Data Source

RNC C-Node

© Copyright IBM Corp. 1999, 2009. All rights reserved.

Source Field

VS.RadioLinkEstablishedPerCell.CsDataPsHsdpa.NbEvt

Source Section

FddCell

RadioLinkEstablishedPerCellCsSpeechAvg

Indicates an average of the number of radio link established per cell, based on time average over collection period (CsSpeechAvg)

Data Source

RNC C-Node

Source Field

VS.RadioLinkEstablishedPerCell.CsSpeech.Avg

Source Section

FddCell

RadioLinkEstablishedPerCellCsSpeechCum

Indicates an average of the number of radio link established per cell, based on time average over collection period (CsSpeechCum)

Data Source

RNC C-Node

Source Field

VS.RadioLinkEstablishedPerCell.CsSpeech.Cum

Source Section

FddCell

RadioLinkEstablishedPerCellCsSpeechHsdpaAvg

Indicates an average of the number of radio link established per cell, based on time average over collection period (CsSpeechHsdpaAvg)

Data Source

RNC C-Node

Source Field

VS.RadioLinkEstablishedPerCell.CsSpeechHsdpa.Avg

Source Section

FddCell

RadioLinkEstablishedPerCellCsSpeechHsdpaCum

Indicates an average of the number of radio link established per cell, based on time average over collection period (CsSpeechHsdpaCum)

Data Source

RNC C-Node

Source Field

VS.RadioLinkEstablishedPerCell.CsSpeechHsdpa.Cum

Source Section

FddCell

RadioLinkEstablishedPerCellCsSpeechHsdpaMax

Indicates an average of the number of radio link established per cell, based on time average over collection period (CsSpeechHsdpaMax)

Data Source

RNC C-Node

Source Field

VS.RadioLinkEstablishedPerCell.CsSpeechHsdpa.Max

Source Section

FddCell

RadioLinkEstablishedPerCellCsSpeechHsdpaMin

Indicates an average of the number of radio link established per cell, based on time average over collection period (CsSpeechHsdpaMin)

Data Source

RNC C-Node

© Copyright IBM Corp. 1999, 2009. All rights reserved.

Source Field

VS.RadioLinkEstablishedPerCell.CsSpeechHsdpa.Min

Source Section

FddCell

RadioLinkEstablishedPerCellCsSpeechHsdpaNbEvt

Indicates an average of the number of radio link established per cell, based on time average over collection period (CsSpeechHsdpaNbEvt)

Data Source

RNC C-Node

Source Field

VS.RadioLinkEstablishedPerCell.CsSpeechHsdpa.NbEvt

Source Section

FddCell

RadioLinkEstablishedPerCellCsSpeechMax

Indicates an average of the number of radio link established per cell, based on time average over collection period (CsSpeechMax)

Data Source

RNC C-Node

Source Field

VS.RadioLinkEstablishedPerCell.CsSpeech.Max

Source Section

FddCell

RadioLinkEstablishedPerCellCsSpeechMin

Indicates an average of the number of radio link established per cell, based on time average over collection period (CsSpeechMin)

Data Source

RNC C-Node

Source Field

VS.RadioLinkEstablishedPerCell.CsSpeech.Min

Source Section

FddCell

RadioLinkEstablishedPerCellCsSpeechNbEvt

Indicates an average of the number of radio link established per cell, based on time average over collection period (CsSpeechNbEvt)

Data Source

RNC C-Node

Source Field

VS.RadioLinkEstablishedPerCell.CsSpeech.NbEvt

Source Section

FddCell

RadioLinkEstablishedPerCellCsSpeechPsDchAvg

Indicates an average of the number of radio link established per cell, based on time average over collection period (CsSpeechPsDchAvg)

Data Source

RNC C-Node

Source Field

VS.RadioLinkEstablishedPerCell.CsSpeechPsDch.Avg

Source Section

FddCell

RadioLinkEstablishedPerCellCsSpeechPsDchCum

Indicates an average of the number of radio link established per cell, based on time average over collection period (CsSpeechPsDchCum)

Data Source

RNC C-Node

© Copyright IBM Corp. 1999, 2009. All rights reserved.

Source Field

VS.RadioLinkEstablishedPerCell.CsSpeechPsDch.Cum

Source Section

FddCell

RadioLinkEstablishedPerCellCsSpeechPsDchMax

Indicates an average of the number of radio link established per cell, based on time average over collection period (CsSpeechPsDchMax)

Data Source

RNC C-Node

Source Field

VS.RadioLinkEstablishedPerCell.CsSpeechPsDch.Max

Source Section

FddCell

RadioLinkEstablishedPerCellCsSpeechPsDchMin

Indicates an average of the number of radio link established per cell, based on time average over collection period (CsSpeechPsDchMin)

Data Source

RNC C-Node

Source Field

VS.RadioLinkEstablishedPerCell.CsSpeechPsDch.Min

Source Section

FddCell

RadioLinkEstablishedPerCellCsSpeechPsDchNbEvt

Indicates an average of the number of radio link established per cell, based on time average over collection period (CsSpeechPsDchNbEvt)

Data Source

RNC C-Node

Source Field

VS.RadioLinkEstablishedPerCell.CsSpeechPsDch.NbEvt

Source Section

FddCell

RadioLinkEstablishedPerCellCsSpeechPsDchPsDchAvg

Indicates an average of the number of radio link established per cell, based on time average over collection period (CsSpeechPsDchPsDchAvg)

Data Source

RNC C-Node

Source Field

VS.RadioLinkEstablishedPerCell.CsSpeechPsDchPsDch.Avg

Source Section

FddCell

RadioLinkEstablishedPerCellCsSpeechPsDchPsDchCum

Indicates an average of the number of radio link established per cell, based on time average over collection period (CsSpeechPsDchPsDchCum)

Data Source

RNC C-Node

Source Field

VS.RadioLinkEstablishedPerCell.CsSpeechPsDchPsDch.Cum

Source Section

FddCell

RadioLinkEstablishedPerCellCsSpeechPsDchPsDchMax

Indicates an average of the number of radio link established per cell, based on time average over collection period (CsSpeechPsDchPsDchMax)

Data Source

RNC C-Node

© Copyright IBM Corp. 1999, 2009. All rights reserved.

Source Field

VS.RadioLinkEstablishedPerCell.CsSpeechPsDchPsDch.Max

Source Section

FddCell

RadioLinkEstablishedPerCellCsSpeechPsDchPsDchMin

Indicates an average of the number of radio link established per cell, based on time average over collection period (CsSpeechPsDchPsDchMin)

Data Source

RNC C-Node

Source Field

VS.RadioLinkEstablishedPerCell.CsSpeechPsDchPsDch.Min

Source Section

FddCell

RadioLinkEstablishedPerCellCsSpeechPsDchPsDchNbEvt

Indicates an average of the number of radio link established per cell, based on time average over collection period (CsSpeechPsDchPsDchNbEvt)

Data Source

RNC C-Node

Source Field

VS.RadioLinkEstablishedPerCell.CsSpeechPsDchPsDch.NbEvt

Source Section

FddCell

RadioLinkEstablishedPerCellCsSpeechPsDchPsHsdpaAvg

Indicates an average of the number of radio link established per cell, based on time average over collection period (CsSpeechPsDchPsHsdpaAvg)

Data Source

RNC C-Node

Source Field

VS.RadioLinkEstablishedPerCell.CsSpeechPsDchPsHsdpa.Avg

Source Section

FddCell

RadioLinkEstablishedPerCellCsSpeechPsDchPsHsdpaCum

Indicates an average of the number of radio link established per cell, based on time average over collection period (CsSpeechPsDchPsHsdpaCum)

Data Source

RNC C-Node

Source Field

VS.RadioLinkEstablishedPerCell.CsSpeechPsDchPsHsdpa.Cum

Source Section

FddCell

RadioLinkEstablishedPerCellCsSpeechPsDchPsHsdpaMax

Indicates an average of the number of radio link established per cell, based on time average over collection period (CsSpeechPsDchPsHsdpaMax)

Data Source

RNC C-Node

Source Field

VS.RadioLinkEstablishedPerCell.CsSpeechPsDchPsHsdpa.Max

Source Section

FddCell

RadioLinkEstablishedPerCellCsSpeechPsDchPsHsdpaMin

Indicates an average of the number of radio link established per cell, based on time average over collection period (CsSpeechPsDchPsHsdpaMin)

Data Source

RNC C-Node

© Copyright IBM Corp. 1999, 2009. All rights reserved.

Source Field

VS.RadioLinkEstablishedPerCell.CsSpeechPsDchPsHsdpa.Min

Source Section

FddCell

RadioLinkEstablishedPerCellCsSpeechPsDchPsHsdpaNbEvt

Indicates an average of the number of radio link established per cell, based on time average over collection period (CsSpeechPsDchPsHsdpaNbEvt)

Data Source

RNC C-Node

Source Field

VS.RadioLinkEstablishedPerCell.CsSpeechPsDchPsHsdpa.NbEvt

Source Section

FddCell

RadioLinkEstablishedPerCellCsStrAvg

Indicates an average of the number of radio link established per cell, based on time average over collection period (CsStrAvg)

Data Source

RNC C-Node

Source Field

VS.RadioLinkEstablishedPerCell.CsStr.Avg

Source Section

FddCell

RadioLinkEstablishedPerCellCsStrCum

Indicates an average of the number of radio link established per cell, based on time average over collection period (CsStrCum)

Data Source

RNC C-Node

Source Field

VS.RadioLinkEstablishedPerCell.CsStr.Cum

Source Section

FddCell

RadioLinkEstablishedPerCellCsStrMax

Indicates an average of the number of radio link established per cell, based on time average over collection period (CsStrMax)

Data Source

RNC C-Node

Source Field

VS.RadioLinkEstablishedPerCell.CsStr.Max

Source Section

FddCell

RadioLinkEstablishedPerCellCsStrMin

Indicates an average of the number of radio link established per cell, based on time average over collection period (CsStrMin)

Data Source

RNC C-Node

Source Field

VS.RadioLinkEstablishedPerCell.CsStr.Min

Source Section

FddCell

RadioLinkEstablishedPerCellCsStrNbEvt

Indicates an average of the number of radio link established per cell, based on time average over collection period (CsStrNbEvt)

Data Source

RNC C-Node

© Copyright IBM Corp. 1999, 2009. All rights reserved.

Source Field

VS.RadioLinkEstablishedPerCell.CsStr.NbEvt

Source Section

FddCell

RadioLinkEstablishedPerCellOtherAvg

Indicates an average of the number of radio link established per cell, based on time average over collection period (OtherAvg)

Data Source

RNC C-Node

Source Field

VS.RadioLinkEstablishedPerCell.Other.Avg

Source Section

FddCell

RadioLinkEstablishedPerCellOtherCum

Indicates an average of the number of radio link established per cell, based on time average over collection period (OtherCum)

Data Source

RNC C-Node

Source Field

VS.RadioLinkEstablishedPerCell.Other.Cum

Source Section

FddCell

RadioLinkEstablishedPerCellOtherMax

Indicates an average of the number of radio link established per cell, based on time average over collection period (OtherMax)

Data Source

RNC C-Node

Source Field

VS.RadioLinkEstablishedPerCell.Other.Max

Source Section

FddCell

RadioLinkEstablishedPerCellOtherMin

Indicates an average of the number of radio link established per cell, based on time average over collection period (OtherMin)

Data Source

RNC C-Node

Source Field

VS.RadioLinkEstablishedPerCell.Other.Min

Source Section

FddCell

RadioLinkEstablishedPerCellOtherNbEvt

Indicates an average of the number of radio link established per cell, based on time average over collection period (OtherNbEvt)

Data Source

RNC C-Node

Source Field

VS.RadioLinkEstablishedPerCell.Other.NbEvt

Source Section

FddCell

RadioLinkEstablishedPerCellPsDchDlDchUlAvg

Indicates an average of the number of radio link established per cell, based on time average over collection period (PsDchDlDchUlAvg)

Data Source

RNC C-Node

© Copyright IBM Corp. 1999, 2009. All rights reserved.

Source Field

VS.RadioLinkEstablishedPerCell.PsDchDlDchUl.Avg

Source Section

FddCell

RadioLinkEstablishedPerCellPsDchDlDchUlCum

Indicates an average of the number of radio link established per cell, based on time average over collection period (PsDchDlDchUlCum)

Data Source

RNC C-Node

Source Field

VS.RadioLinkEstablishedPerCell.PsDchDlDchUl.Cum

Source Section

FddCell

RadioLinkEstablishedPerCellPsDchDlDchUlMax

Indicates an average of the number of radio link established per cell, based on time average over collection period (PsDchDlDchUlMax)

Data Source

RNC C-Node

Source Field

VS.RadioLinkEstablishedPerCell.PsDchDlDchUl.Max

Source Section

FddCell

RadioLinkEstablishedPerCellPsDchDlDchUlMin

Indicates an average of the number of radio link established per cell, based on time average over collection period (PsDchDlDchUlMin)

Data Source

RNC C-Node

Source Field

VS.RadioLinkEstablishedPerCell.PsDchDlDchUl.Min

Source Section

FddCell

RadioLinkEstablishedPerCellPsDchDlDchUlNbEvt

Indicates an average of the number of radio link established per cell, based on time average over collection period (PsDchDlDchUlNbEvt)

Data Source

RNC C-Node

Source Field

VS.RadioLinkEstablishedPerCell.PsDchDlDchUl.NbEvt

Source Section

FddCell

RadioLinkEstablishedPerCellPsDchPsDchAvg

Indicates an average of the number of radio link established per cell, based on time average over collection period (PsDchPsDchAvg)

Data Source

RNC C-Node

Source Field

VS.RadioLinkEstablishedPerCell.PsDchPsDch.Avg

Source Section

FddCell

RadioLinkEstablishedPerCellPsDchPsDchCum

Indicates an average of the number of radio link established per cell, based on time average over collection period (PsDchPsDchCum)

Data Source

RNC C-Node

© Copyright IBM Corp. 1999, 2009. All rights reserved.

Source Field

VS.RadioLinkEstablishedPerCell.PsDchPsDch.Cum

Source Section

FddCell

RadioLinkEstablishedPerCellPsDchPsDchMax

Indicates an average of the number of radio link established per cell, based on time average over collection period (PsDchPsDchMax)

Data Source

RNC C-Node

Source Field

VS.RadioLinkEstablishedPerCell.PsDchPsDch.Max

Source Section

FddCell

RadioLinkEstablishedPerCellPsDchPsDchMin

Indicates an average of the number of radio link established per cell, based on time average over collection period (PsDchPsDchMin)

Data Source

RNC C-Node

Source Field

VS.RadioLinkEstablishedPerCell.PsDchPsDch.Min

Source Section

FddCell

RadioLinkEstablishedPerCellPsDchPsDchNbEvt

Indicates an average of the number of radio link established per cell, based on time average over collection period (PsDchPsDchNbEvt)

Data Source

RNC C-Node

Source Field

VS.RadioLinkEstablishedPerCell.PsDchPsDch.NbEvt

Source Section

FddCell

RadioLinkEstablishedPerCellPsDchPsHsdpaAvg

Indicates an average of the number of radio link established per cell, based on time average over collection period (PsDchPsHsdpaAvg)

Data Source

RNC C-Node

Source Field

VS.RadioLinkEstablishedPerCell.PsDchPsHsdpa.Avg

Source Section

FddCell

RadioLinkEstablishedPerCellPsDchPsHsdpaCum

Indicates an average of the number of radio link established per cell, based on time average over collection period (PsDchPsHsdpaCum)

Data Source

RNC C-Node

Source Field

VS.RadioLinkEstablishedPerCell.PsDchPsHsdpa.Cum

Source Section

FddCell

RadioLinkEstablishedPerCellPsDchPsHsdpaMax

Indicates an average of the number of radio link established per cell, based on time average over collection period (PsDchPsHsdpaMax)

Data Source

RNC C-Node

© Copyright IBM Corp. 1999, 2009. All rights reserved.

Source Field

VS.RadioLinkEstablishedPerCell.PsDchPsHsdpa.Max

Source Section

FddCell

RadioLinkEstablishedPerCellPsDchPsHsdpaMin

Indicates an average of the number of radio link established per cell, based on time average over collection period (PsDchPsHsdpaMin)

Data Source

RNC C-Node

Source Field

VS.RadioLinkEstablishedPerCell.PsDchPsHsdpa.Min

Source Section

FddCell

RadioLinkEstablishedPerCellPsDchPsHsdpaNbEvt

Indicates an average of the number of radio link established per cell, based on time average over collection period (PsDchPsHsdpaNbEvt)

Data Source

RNC C-Node

Source Field

VS.RadioLinkEstablishedPerCell.PsDchPsHsdpa.NbEvt

Source Section

FddCell

RadioLinkEstablishedPerCellPsHsdpaDchUlAvg

Indicates an average of the number of radio link established per cell, based on time average over collection period (PsHsdpaDchUlAvg)

Data Source

RNC C-Node

Source Field

VS.RadioLinkEstablishedPerCell.PsHsdpaDchUl.Avg

Source Section

FddCell

RadioLinkEstablishedPerCellPsHsdpaDchUlCum

Indicates an average of the number of radio link established per cell, based on time average over collection period (PsHsdpaDchUlCum)

Data Source

RNC C-Node

Source Field

VS.RadioLinkEstablishedPerCell.PsHsdpaDchUl.Cum

Source Section

FddCell

RadioLinkEstablishedPerCellPsHsdpaDchUlMax

Indicates an average of the number of radio link established per cell, based on time average over collection period (PsHsdpaDchUlMax)

Data Source

RNC C-Node

Source Field

VS.RadioLinkEstablishedPerCell.PsHsdpaDchUl.Max

Source Section

FddCell

RadioLinkEstablishedPerCellPsHsdpaDchUlMin

Indicates an average of the number of radio link established per cell, based on time average over collection period (PsHsdpaDchUlMin)

Data Source

RNC C-Node

© Copyright IBM Corp. 1999, 2009. All rights reserved.

Source Field

VS.RadioLinkEstablishedPerCell.PsHsdpaDchUl.Min

Source Section

FddCell

RadioLinkEstablishedPerCellPsHsdpaDchUlNbEvt

Indicates an average of the number of radio link established per cell, based on time average over collection period (PsHsdpaDchUlNbEvt)

Data Source

RNC C-Node

Source Field

VS.RadioLinkEstablishedPerCell.PsHsdpaDchUl.NbEvt

Source Section

FddCell

RadioLinkEstablishedPerCellPsHsdpaDlDchEdchUlAvg

Indicates an average of the number of radio link established per cell, based on time average over collection period (PsHsdpaDlDchEdchUlAvg)

Data Source

RNC C-Node

Source Field

VS.RadioLinkEstablishedPerCell.PsHsdpaDlDchEdchUl.Avg

Source Section

FddCell

RadioLinkEstablishedPerCellPsHsdpaDlDchEdchUlCum

Indicates an average of the number of radio link established per cell, based on time average over collection period (PsHsdpaDlDchEdchUlCum)

Data Source

RNC C-Node

Source Field

VS.RadioLinkEstablishedPerCell.PsHsdpaDlDchEdchUl.Cum

Source Section

FddCell

RadioLinkEstablishedPerCellPsHsdpaDlDchEdchUlMax

Indicates an average of the number of radio link established per cell, based on time average over collection period (PsHsdpaDlDchEdchUlMax)

Data Source

RNC C-Node

Source Field

VS.RadioLinkEstablishedPerCell.PsHsdpaDlDchEdchUl.Max

Source Section

FddCell

RadioLinkEstablishedPerCellPsHsdpaDlDchEdchUlMin

Indicates an average of the number of radio link established per cell, based on time average over collection period (PsHsdpaDlDchEdchUlMin)

Data Source

RNC C-Node

Source Field

VS.RadioLinkEstablishedPerCell.PsHsdpaDlDchEdchUl.Min

Source Section

FddCell

RadioLinkEstablishedPerCellPsHsdpaDlDchEdchUlNbEvt

Indicates an average of the number of radio link established per cell, based on time average over collection period (PsHsdpaDlDchEdchUlNbEvt)

Data Source

RNC C-Node

© Copyright IBM Corp. 1999, 2009. All rights reserved.

Source Field

VS.RadioLinkEstablishedPerCell.PsHsdpaDlDchEdchUl.NbEvt

Source Section

FddCell

RadioLinkEstablishedPerCellPsHsdpaDlEdchUlAvg

Indicates an average of the number of radio link established per cell, based on time average over collection period (PsHsdpaDlEdchUlAvg)

Data Source

RNC C-Node

Source Field

VS.RadioLinkEstablishedPerCell.PsHsdpaDlEdchUl.Avg

Source Section

FddCell

RadioLinkEstablishedPerCellPsHsdpaDlEdchUlCum

Indicates an average of the number of radio link established per cell, based on time average over collection period (PsHsdpaDlEdchUlCum)

Data Source

RNC C-Node

Source Field

VS.RadioLinkEstablishedPerCell.PsHsdpaDlEdchUl.Cum

Source Section

FddCell

RadioLinkEstablishedPerCellPsHsdpaDlEdchUlMax

Indicates an average of the number of radio link established per cell, based on time average over collection period (PsHsdpaDlEdchUlMax)

Data Source

RNC C-Node

Source Field

VS.RadioLinkEstablishedPerCell.PsHsdpaDlEdchUl.Max

Source Section

FddCell

RadioLinkEstablishedPerCellPsHsdpaDlEdchUlMin

Indicates an average of the number of radio link established per cell, based on time average over collection period (PsHsdpaDlEdchUlMin)

Data Source

RNC C-Node

Source Field

VS.RadioLinkEstablishedPerCell.PsHsdpaDlEdchUl.Min

Source Section

FddCell

RadioLinkEstablishedPerCellPsHsdpaDlEdchUlNbEvt

Indicates an average of the number of radio link established per cell, based on time average over collection period (PsHsdpaDlEdchUlNbEvt)

Data Source

RNC C-Node

Source Field

VS.RadioLinkEstablishedPerCell.PsHsdpaDlEdchUl.NbEvt

Source Section

FddCell

RadioLinkEstablishedPerCellSigAvg

Indicates an average of the number of radio link established per cell, based on time average over collection period (SigAvg)

Data Source

RNC C-Node

© Copyright IBM Corp. 1999, 2009. All rights reserved.

Source Field

VS.RadioLinkEstablishedPerCell.Sig.Avg

Source Section

FddCell

RadioLinkEstablishedPerCellSigCum

Indicates an average of the number of radio link established per cell, based on time average over collection period (SigCum)

Data Source

RNC C-Node

Source Field

VS.RadioLinkEstablishedPerCell.Sig.Cum

Source Section

FddCell

RadioLinkEstablishedPerCellSigMax

Indicates an average of the number of radio link established per cell, based on time average over collection period (SigMax)

Data Source

RNC C-Node

Source Field

VS.RadioLinkEstablishedPerCell.Sig.Max

Source Section

FddCell

RadioLinkEstablishedPerCellSigMin

Indicates an average of the number of radio link established per cell, based on time average over collection period (SigMin)

Data Source

RNC C-Node

Source Field

VS.RadioLinkEstablishedPerCell.Sig.Min

Source Section

FddCell

RadioLinkEstablishedPerCellSigNbEvt

Indicates an average of the number of radio link established per cell, based on time average over collection period (SigNbEvt)

Data Source

RNC C-Node

Source Field

VS.RadioLinkEstablishedPerCell.Sig.NbEvt

Source Section

FddCell

RadioLinkFailureIndicationControlProcessingOverload

Number of RL Failure indications received from BTS (ControlProcessingOverload)

Data Source

RNC C-Node

Source Field

VS.RadioLinkFailureIndication.ControlProcessingOverload

Source Section

FddCell

RadioLinkFailureIndicationHardwareFailure

Number of RL Failure indications received from BTS (HardwareFailure)

Data Source

RNC C-Node

© Copyright IBM Corp. 1999, 2009. All rights reserved.

Source Field

VS.RadioLinkFailureIndication.HardwareFailure

Source Section

FddCell

RadioLinkFailureIndicationImaDefense

Number of RL Failure indications received from BTS (ImaDefense)

Data Source

RNC C-Node

Source Field

VS.RadioLinkFailureIndication.ImaDefense

Source Section

FddCell

RadioLinkFailureIndicationInvalidCmSettings

Number of RL Failure indications received from BTS (InvalidCmSettings)

Data Source

RNC C-Node

Source Field

VS.RadioLinkFailureIndication.InvalidCmSettings

Source Section

FddCell

RadioLinkFailureIndicationNotEnoughResourcesForCm

Number of RL Failure indications received from BTS (NotEnoughResourcesForCm)

Data Source

RNC C-Node

Source Field

VS.RadioLinkFailureIndication.NotEnoughResourcesForCm

Source Section

FddCell

RadioLinkFailureIndicationOamIntervention

Number of RL Failure indications received from BTS (OamIntervention)

Data Source

RNC C-Node

Source Field

VS.RadioLinkFailureIndication.OamIntervention

Source Section

FddCell

RadioLinkFailureIndicationOtherCauses

Number of RL Failure indications received from BTS (OtherCauses)

Data Source

RNC C-Node

Source Field

VS.RadioLinkFailureIndication.OtherCauses

Source Section

FddCell

RadioLinkFailureIndicationSynchronisationFailure

Number of RL Failure indications received from BTS (SynchronisationFailure)

Data Source

RNC C-Node

Source Field

VS.RadioLinkFailureIndication.SynchronisationFailure

Source Section

FddCell

© Copyright IBM Corp. 1999, 2009. All rights reserved.

RadioLinkFailureIndicationTransportResourcesUnavailable

Number of RL Failure indications received from BTS (TransportResourcesUnavailable)

Data Source

RNC C-Node

Source Field

VS.RadioLinkFailureIndication.TransportResourcesUnavailable

Source Section

FddCell

RadioLinkFirstSetupFailureInodeRefusal

Number of failures of 0 to 1 radio link establishment for a call (InodeRefusal)

Data Source

RNC C-Node

Source Field

VS.RadioLinkFirstSetupFailure.InodeRefusal

Source Section

FddCell

RadioLinkFirstSetupFailureIubLayerCongestion

Number of failures of 0 to 1 radio link establishment for a call (IubLayerCongestion)

Data Source

RNC C-Node

Source Field

VS.RadioLinkFirstSetupFailure.IubLayerCongestion

Source Section

FddCell

RadioLinkFirstSetupFailureLackBwthIub

Number of failures of 0 to 1 radio link establishment for a call (LackBwthIub)

Data Source

RNC C-Node

Source Field

VS.RadioLinkFirstSetupFailure.LackBwthIub

Source Section

FddCell

RadioLinkFirstSetupFailureLackCidOrUdpPortIub

Number of failures of 0 to 1 radio link establishment for a call (LackCidOrUdpPortIub)

Data Source

RNC C-Node

Source Field

VS.RadioLinkFirstSetupFailure.LackCidOrUdpPortIub

Source Section

FddCell

RadioLinkFirstSetupFailureNodeBCEMLackL1Rsrc

Number of failures of 0 to 1 radio link establishment for a call (NodeBCEMLackL1Rsrc)

Data Source

RNC C-Node

Source Field

VS.RadioLinkFirstSetupFailure.NodeBCEMLackL1Rsrc

Source Section

FddCell

RadioLinkFirstSetupFailureNodeBOutOfOrder

Number of failures of 0 to 1 radio link establishment for a call (NodeBOutOfOrder)

Data Source

RNC C-Node

© Copyright IBM Corp. 1999, 2009. All rights reserved.

Source Field

VS.RadioLinkFirstSetupFailure.NodeBOutOfOrder

Source Section

FddCell

RadioLinkFirstSetupFailureRadioLinkSetupFailure

Number of failures of 0 to 1 radio link establishment for a call (RadioLinkSetupFailure)

Data Source

RNC C-Node

Source Field

VS.RadioLinkFirstSetupFailure.RadioLinkSetupFailure

Source Section

FddCell

RadioLinkFirstSetupFailureRrmRefusal

Number of failures of 0 to 1 radio link establishment for a call (RrmRefusal)

Data Source

RNC C-Node

Source Field

VS.RadioLinkFirstSetupFailure.RrmRefusal

Source Section

FddCell

RadioLinkFirstSetupFailureTimeOut

Number of failures of 0 to 1 radio link establishment for a call (TimeOut)

Data Source

RNC C-Node

Source Field

VS.RadioLinkFirstSetupFailure.TimeOut

Source Section

FddCell

RadioLinkFirstSetupRequest

Number of attempts of transition from 0 to 1 radio link for call (RadioLinkFirstSetupRequest)

Data Source

RNC C-Node

Source Field

VS.RadioLinkFirstSetupRequest

Source Section

FddCell

RadioLinkReconfigurationCancel

Number of radio link reconfiguration cancel sent (counted per radio link in message and not per message) (RadioLinkReconfigurationCancel)

Data Source

RNC C-Node

Source Field

VS.RadioLinkReconfigurationCancel

Source Section

FddCell

RadioLinkReconfigurationCommitCsData

Number of radio link reconfiguration commit (CsData)

Data Source

RNC C-Node

Source Field

VS.RadioLinkReconfigurationCommit.CsData

© Copyright IBM Corp. 1999, 2009. All rights reserved.

Source Section

FddCell

RadioLinkReconfigurationCommitCsDataPsDch

Number of radio link reconfiguration commit (CsDataPsDch)

Data Source

RNC C-Node

Source Field

VS.RadioLinkReconfigurationCommit.CsDataPsDch

Source Section

FddCell

RadioLinkReconfigurationCommitCsDataPsHsdpa

Number of radio link reconfiguration commit (CsDataPsHsdpa)

Data Source

RNC C-Node

Source Field

VS.RadioLinkReconfigurationCommit.CsDataPsHsdpa

Source Section

FddCell

RadioLinkReconfigurationCommitCsSpeech

Number of radio link reconfiguration commit (CsSpeech)

Data Source

RNC C-Node

Source Field

VS.RadioLinkReconfigurationCommit.CsSpeech

Source Section

FddCell

RadioLinkReconfigurationCommitCsSpeechHsdpa

Number of radio link reconfiguration commit (CsSpeechHsdpa)

Data Source

RNC C-Node

Source Field

VS.RadioLinkReconfigurationCommit.CsSpeechHsdpa

Source Section

FddCell

RadioLinkReconfigurationCommitCsSpeechPsDch

Number of radio link reconfiguration commit (CsSpeechPsDch)

Data Source

RNC C-Node

Source Field

VS.RadioLinkReconfigurationCommit.CsSpeechPsDch

Source Section

FddCell

RadioLinkReconfigurationCommitCsSpeechPsDchPsDch

Number of radio link reconfiguration commit (CsSpeechPsDchPsDch)

Data Source

RNC C-Node

Source Field

VS.RadioLinkReconfigurationCommit.CsSpeechPsDchPsDch

Source Section

FddCell

RadioLinkReconfigurationCommitCsSpeechPsDchPsHsdpa

Number of radio link reconfiguration commit (CsSpeechPsDchPsHsdpa)

© Copyright IBM Corp. 1999, 2009. All rights reserved.

Data Source

RNC C-Node

Source Field

VS.RadioLinkReconfigurationCommit.CsSpeechPsDchPsHsdpa

Source Section

FddCell

RadioLinkReconfigurationCommitCsStr

Number of radio link reconfiguration commit (CsStr)

Data Source

RNC C-Node

Source Field

VS.RadioLinkReconfigurationCommit.CsStr

Source Section

FddCell

RadioLinkReconfigurationCommitOther

Number of radio link reconfiguration commit (Other)

Data Source

RNC C-Node

Source Field

VS.RadioLinkReconfigurationCommit.Other

Source Section

FddCell

RadioLinkReconfigurationCommitPsDchDlDchUl

Number of radio link reconfiguration commit (PsDchDlDchUl)

Data Source

RNC C-Node

Source Field

VS.RadioLinkReconfigurationCommit.PsDchDlDchUl

Source Section

FddCell

RadioLinkReconfigurationCommitPsDchPsDch

Number of radio link reconfiguration commit (PsDchPsDch)

Data Source

RNC C-Node

Source Field

VS.RadioLinkReconfigurationCommit.PsDchPsDch

Source Section

FddCell

RadioLinkReconfigurationCommitPsDchPsHsdpa

Number of radio link reconfiguration commit (PsDchPsHsdpa)

Data Source

RNC C-Node

Source Field

VS.RadioLinkReconfigurationCommit.PsDchPsHsdpa

Source Section

FddCell

RadioLinkReconfigurationCommitPsHsdpaDchUl

Number of radio link reconfiguration commit (PsHsdpaDchUl)

Data Source

RNC C-Node

Source Field

VS.RadioLinkReconfigurationCommit.PsHsdpaDchUl

© Copyright IBM Corp. 1999, 2009. All rights reserved.

Source Section

FddCell

RadioLinkReconfigurationCommitPsHsdpaDlDchEdchUl

Number of radio link reconfiguration commit (PsHsdpaDlDchEdchUl)

Data Source

RNC C-Node

Source Field

VS.RadioLinkReconfigurationCommit.PsHsdpaDlDchEdchUl

Source Section

FddCell

RadioLinkReconfigurationCommitPsHsdpaDlEdchUl

Number of radio link reconfiguration commit (PsHsdpaDlEdchUl)

Data Source

RNC C-Node

Source Field

VS.RadioLinkReconfigurationCommit.PsHsdpaDlEdchUl

Source Section

FddCell

RadioLinkReconfigurationCommitSig

Number of radio link reconfiguration commit (Sig)

Data Source

RNC C-Node

Source Field

VS.RadioLinkReconfigurationCommit.Sig

Source Section

FddCell

RadioLinkReconfigurationPrepareSuccessCsData

Number of successful synchronised radio link reconfiguration preparation (CsData)

Data Source

RNC C-Node

Source Field

VS.RadioLinkReconfigurationPrepareSuccess.CsData

Source Section

FddCell

RadioLinkReconfigurationPrepareSuccessCsDataPsDch

Number of successful synchronised radio link reconfiguration preparation (CsDataPsDch)

Data Source

RNC C-Node

Source Field

VS.RadioLinkReconfigurationPrepareSuccess.CsDataPsDch

Source Section

FddCell

RadioLinkReconfigurationPrepareSuccessCsDataPsHsdpa

Number of successful synchronised radio link reconfiguration preparation (CsDataPsHsdpa)

Data Source

RNC C-Node

Source Field

VS.RadioLinkReconfigurationPrepareSuccess.CsDataPsHsdpa

Source Section

FddCell

RadioLinkReconfigurationPrepareSuccessCsSpeech

Number of successful synchronised radio link reconfiguration preparation (CsSpeech)

© Copyright IBM Corp. 1999, 2009. All rights reserved.

Data Source

RNC C-Node

Source Field

VS.RadioLinkReconfigurationPrepareSuccess.CsSpeech

Source Section

FddCell

RadioLinkReconfigurationPrepareSuccessCsSpeechHsdpa

Number of successful synchronised radio link reconfiguration preparation (CsSpeechHsdpa)

Data Source

RNC C-Node

Source Field

VS.RadioLinkReconfigurationPrepareSuccess.CsSpeechHsdpa

Source Section

FddCell

RadioLinkReconfigurationPrepareSuccessCsSpeechPsDch

Number of successful synchronised radio link reconfiguration preparation (CsSpeechPsDch)

Data Source

RNC C-Node

Source Field

VS.RadioLinkReconfigurationPrepareSuccess.CsSpeechPsDch

Source Section

FddCell

RadioLinkReconfigurationPrepareSuccessCsSpeechPsDchPsDch

Number of successful synchronised radio link reconfiguration preparation (CsSpeechPsDchPsDch)

Data Source

RNC C-Node

Source Field

VS.RadioLinkReconfigurationPrepareSuccess.CsSpeechPsDchPsDch

Source Section

FddCell

RadioLinkReconfigurationPrepareSuccessCsSpeechPsDchPsHsdpa

Number of successful synchronised radio link reconfiguration preparation (CsSpeechPsDchPsHsdpa)

Data Source

RNC C-Node

Source Field

VS.RadioLinkReconfigurationPrepareSuccess.CsSpeechPsDchPsHsdpa

Source Section

FddCell

RadioLinkReconfigurationPrepareSuccessCsStr

Number of successful synchronised radio link reconfiguration preparation (CsStr)

Data Source

RNC C-Node

Source Field

VS.RadioLinkReconfigurationPrepareSuccess.CsStr

Source Section

FddCell

RadioLinkReconfigurationPrepareSuccessOther

Number of successful synchronised radio link reconfiguration preparation (Other)

© Copyright IBM Corp. 1999, 2009. All rights reserved.

Data Source

RNC C-Node

Source Field

VS.RadioLinkReconfigurationPrepareSuccess.Other

Source Section

FddCell

RadioLinkReconfigurationPrepareSuccessPsDchDlDchUl

Number of successful synchronised radio link reconfiguration preparation (PsDchDlDchUl)

Data Source

RNC C-Node

Source Field

VS.RadioLinkReconfigurationPrepareSuccess.PsDchDlDchUl

Source Section

FddCell

RadioLinkReconfigurationPrepareSuccessPsDchPsDch

Number of successful synchronised radio link reconfiguration preparation (PsDchPsDch)

Data Source

RNC C-Node

Source Field

VS.RadioLinkReconfigurationPrepareSuccess.PsDchPsDch

Source Section

FddCell

RadioLinkReconfigurationPrepareSuccessPsDchPsHsdpa

Number of successful synchronised radio link reconfiguration preparation (PsDchPsHsdpa)

Data Source

RNC C-Node

Source Field

VS.RadioLinkReconfigurationPrepareSuccess.PsDchPsHsdpa

Source Section

FddCell

RadioLinkReconfigurationPrepareSuccessPsHsdpaDchUl

Number of successful synchronised radio link reconfiguration preparation (PsHsdpaDchUl)

Data Source

RNC C-Node

Source Field

VS.RadioLinkReconfigurationPrepareSuccess.PsHsdpaDchUl

Source Section

FddCell

RadioLinkReconfigurationPrepareSuccessPsHsdpaDlDchEdchUl

Number of successful synchronised radio link reconfiguration preparation (PsHsdpaDlDchEdchUl)

Data Source

RNC C-Node

Source Field

VS.RadioLinkReconfigurationPrepareSuccess.PsHsdpaDlDchEdchUl

Source Section

FddCell

RadioLinkReconfigurationPrepareSuccessPsHsdpaDlEdchUl

Number of successful synchronised radio link reconfiguration preparation (PsHsdpaDlEdchUl)

Data Source

RNC C-Node

© Copyright IBM Corp. 1999, 2009. All rights reserved.

Source Field

VS.RadioLinkReconfigurationPrepareSuccess.PsHsdpaDlEdchUl

Source Section

FddCell

RadioLinkReconfigurationPrepareSuccessSig

Number of successful synchronised radio link reconfiguration preparation (Sig)

Data Source

RNC C-Node

Source Field

VS.RadioLinkReconfigurationPrepareSuccess.Sig

Source Section

FddCell

RadioLinkReconfigurationPrepareUnsuccessINodeRefusal

Number of failures radio link reconfiguration preparation (INodeRefusal)

Data Source

RNC C-Node

Source Field

VS.RadioLinkReconfigurationPrepareUnsuccess.INodeRefusal

Source Section

FddCell

RadioLinkReconfigurationPrepareUnsuccessIubLayerCongestion

Number of failures radio link reconfiguration preparation (IubLayerCongestion)

Data Source

RNC C-Node

Source Field

VS.RadioLinkReconfigurationPrepareUnsuccess.IubLayerCongestion

Source Section

FddCell

RadioLinkReconfigurationPrepareUnsuccessLackBwthIub

Number of failures radio link reconfiguration preparation (LackBwthIub)

Data Source

RNC C-Node

Source Field

VS.RadioLinkReconfigurationPrepareUnsuccess.LackBwthIub

Source Section

FddCell

RadioLinkReconfigurationPrepareUnsuccessLackCidOrUdpPortIub

Number of failures radio link reconfiguration preparation (LackCidOrUdpPortIub)

Data Source

RNC C-Node

Source Field

VS.RadioLinkReconfigurationPrepareUnsuccess.LackCidOrUdpPortIub

Source Section

FddCell

RadioLinkReconfigurationPrepareUnsuccessNodeBCEMLackL1Rsrc

Number of failures radio link reconfiguration preparation (NodeBCEMLackL1Rsrc)

Data Source

RNC C-Node

Source Field

VS.RadioLinkReconfigurationPrepareUnsuccess.NodeBCEMLackL1Rsrc

Source Section

FddCell

© Copyright IBM Corp. 1999, 2009. All rights reserved.

RadioLinkReconfigurationPrepareUnsuccessNodeBOutOfOrder

Number of failures radio link reconfiguration preparation (NodeBOutOfOrder)

Data Source

RNC C-Node

Source Field

VS.RadioLinkReconfigurationPrepareUnsuccess.NodeBOutOfOrder

Source Section

FddCell

RadioLinkReconfigurationPrepareUnsuccessRadioLinkReconfigurationFailure

Number of failures radio link reconfiguration preparation (RadioLinkReconfigurationFailure)

Data Source

RNC C-Node

Source Field

VS.RadioLinkReconfigurationPrepareUnsuccess.RadioLinkReconfigurationFailure

Source Section

FddCell

RadioLinkReconfigurationPrepareUnsuccessRrmRefusal

Number of failures radio link reconfiguration preparation (RrmRefusal)

Data Source

RNC C-Node

Source Field

VS.RadioLinkReconfigurationPrepareUnsuccess.RrmRefusal

Source Section

FddCell

RadioLinkReconfigurationPrepareUnsuccessTimeoutNbap

Number of failures radio link reconfiguration preparation (TimeoutNbap)

Data Source

RNC C-Node

Source Field

VS.RadioLinkReconfigurationPrepareUnsuccess.TimeoutNbap

Source Section

FddCell

RadioLinkReconfPrepReqCsData

Number of internal event that would lead a radio link reconfiguration prepare. (CsData)

Data Source

RNC C-Node

Source Field

VS.RadioLinkReconfPrepReq.CsData

Source Section

FddCell

RadioLinkReconfPrepReqCsDataPsDch

Number of internal event that would lead a radio link reconfiguration prepare. (CsDataPsDch)

Data Source

RNC C-Node

Source Field

VS.RadioLinkReconfPrepReq.CsDataPsDch

Source Section

FddCell

RadioLinkReconfPrepReqCsDataPsHsdpa

Number of internal event that would lead a radio link reconfiguration prepare. (CsDataPsHsdpa)

© Copyright IBM Corp. 1999, 2009. All rights reserved.

Data Source

RNC C-Node

Source Field

VS.RadioLinkReconfPrepReq.CsDataPsHsdpa

Source Section

FddCell

RadioLinkReconfPrepReqCsSpeech

Number of internal event that would lead a radio link reconfiguration prepare. (CsSpeech)

Data Source

RNC C-Node

Source Field

VS.RadioLinkReconfPrepReq.CsSpeech

Source Section

FddCell

RadioLinkReconfPrepReqCsSpeechHsdpa

Number of internal event that would lead a radio link reconfiguration prepare. (CsSpeechHsdpa)

Data Source

RNC C-Node

Source Field

VS.RadioLinkReconfPrepReq.CsSpeechHsdpa

Source Section

FddCell

RadioLinkReconfPrepReqCsSpeechPsDch

Number of internal event that would lead a radio link reconfiguration prepare. (CsSpeechPsDch)

Data Source

RNC C-Node

Source Field

VS.RadioLinkReconfPrepReq.CsSpeechPsDch

Source Section

FddCell

RadioLinkReconfPrepReqCsSpeechPsDchPsDch

Number of internal event that would lead a radio link reconfiguration prepare. (CsSpeechPsDchPsDch)

Data Source

RNC C-Node

Source Field

VS.RadioLinkReconfPrepReq.CsSpeechPsDchPsDch

Source Section

FddCell

RadioLinkReconfPrepReqCsSpeechPsDchPsHsdpa

Number of internal event that would lead a radio link reconfiguration prepare. (CsSpeechPsDchPsHsdpa)

Data Source

RNC C-Node

Source Field

VS.RadioLinkReconfPrepReq.CsSpeechPsDchPsHsdpa

Source Section

FddCell

RadioLinkReconfPrepReqCsStr

Number of internal event that would lead a radio link reconfiguration prepare. (CsStr)

© Copyright IBM Corp. 1999, 2009. All rights reserved.

Data Source

RNC C-Node

Source Field

VS.RadioLinkReconfPrepReq.CsStr

Source Section

FddCell

RadioLinkReconfPrepReqOther

Number of internal event that would lead a radio link reconfiguration prepare. (Other)

Data Source

RNC C-Node

Source Field

VS.RadioLinkReconfPrepReq.Other

Source Section

FddCell

RadioLinkReconfPrepReqPsDchDlDchUl

Number of internal event that would lead a radio link reconfiguration prepare. (PsDchDlDchUl)

Data Source

RNC C-Node

Source Field

VS.RadioLinkReconfPrepReq.PsDchDlDchUl

Source Section

FddCell

RadioLinkReconfPrepReqPsDchPsDch

Number of internal event that would lead a radio link reconfiguration prepare. (PsDchPsDch)

Data Source

RNC C-Node

Source Field

VS.RadioLinkReconfPrepReq.PsDchPsDch

Source Section

FddCell

RadioLinkReconfPrepReqPsDchPsHsdpa

Number of internal event that would lead a radio link reconfiguration prepare. (PsDchPsHsdpa)

Data Source

RNC C-Node

Source Field

VS.RadioLinkReconfPrepReq.PsDchPsHsdpa

Source Section

FddCell

RadioLinkReconfPrepReqPsHsdpaDchUl

Number of internal event that would lead a radio link reconfiguration prepare. (PsHsdpaDchUl)

Data Source

RNC C-Node

Source Field

VS.RadioLinkReconfPrepReq.PsHsdpaDchUl

Source Section

FddCell

RadioLinkReconfPrepReqPsHsdpaDlDchEdchUl

Number of internal event that would lead a radio link reconfiguration prepare. (PsHsdpaDlDchEdchUl)

Data Source

RNC C-Node

© Copyright IBM Corp. 1999, 2009. All rights reserved.

Source Field

VS.RadioLinkReconfPrepReq.PsHsdpaDlDchEdchUl

Source Section

FddCell

RadioLinkReconfPrepReqPsHsdpaDlEdchUl

Number of internal event that would lead a radio link reconfiguration prepare. (PsHsdpaDlEdchUl)

Data Source

RNC C-Node

Source Field

VS.RadioLinkReconfPrepReq.PsHsdpaDlEdchUl

Source Section

FddCell

RadioLinkReconfPrepReqSig

Number of internal event that would lead a radio link reconfiguration prepare. (Sig)

Data Source

RNC C-Node

Source Field

VS.RadioLinkReconfPrepReq.Sig

Source Section

FddCell

RadioLinkSetupRequestCsData

Number of internal events that would lead to a radio link setup request (CsData)

Data Source

RNC C-Node

Source Field

VS.RadioLinkSetupRequest.CsData

Source Section

FddCell

RadioLinkSetupRequestCsDataPsDch

Number of internal events that would lead to a radio link setup request (CsDataPsDch)

Data Source

RNC C-Node

Source Field

VS.RadioLinkSetupRequest.CsDataPsDch

Source Section

FddCell

RadioLinkSetupRequestCsDataPsHsdpa

Number of internal events that would lead to a radio link setup request (CsDataPsHsdpa)

Data Source

RNC C-Node

Source Field

VS.RadioLinkSetupRequest.CsDataPsHsdpa

Source Section

FddCell

RadioLinkSetupRequestCsSpeech

Number of internal events that would lead to a radio link setup request (CsSpeech)

Data Source

RNC C-Node

Source Field

VS.RadioLinkSetupRequest.CsSpeech

© Copyright IBM Corp. 1999, 2009. All rights reserved.

Source Section

FddCell

RadioLinkSetupRequestCsSpeechHsdpa

Number of internal events that would lead to a radio link setup request (CsSpeechHsdpa)

Data Source

RNC C-Node

Source Field

VS.RadioLinkSetupRequest.CsSpeechHsdpa

Source Section

FddCell

RadioLinkSetupRequestCsSpeechPsDch

Number of internal events that would lead to a radio link setup request (CsSpeechPsDch)

Data Source

RNC C-Node

Source Field

VS.RadioLinkSetupRequest.CsSpeechPsDch

Source Section

FddCell

RadioLinkSetupRequestCsSpeechPsDchPsDch

Number of internal events that would lead to a radio link setup request (CsSpeechPsDchPsDch)

Data Source

RNC C-Node

Source Field

VS.RadioLinkSetupRequest.CsSpeechPsDchPsDch

Source Section

FddCell

RadioLinkSetupRequestCsSpeechPsDchPsHsdpa

Number of internal events that would lead to a radio link setup request (CsSpeechPsDchPsHsdpa)

Data Source

RNC C-Node

Source Field

VS.RadioLinkSetupRequest.CsSpeechPsDchPsHsdpa

Source Section

FddCell

RadioLinkSetupRequestCsStr

Number of internal events that would lead to a radio link setup request (CsStr)

Data Source

RNC C-Node

Source Field

VS.RadioLinkSetupRequest.CsStr

Source Section

FddCell

RadioLinkSetupRequestOther

Number of internal events that would lead to a radio link setup request (Other)

Data Source

RNC C-Node

Source Field

VS.RadioLinkSetupRequest.Other

Source Section

FddCell

© Copyright IBM Corp. 1999, 2009. All rights reserved.

RadioLinkSetupRequestPsDchDlDchUl

Number of internal events that would lead to a radio link setup request (PsDchDlDchUl)

Data Source

RNC C-Node

Source Field

VS.RadioLinkSetupRequest.PsDchDlDchUl

Source Section

FddCell

RadioLinkSetupRequestPsDchPsDch

Number of internal events that would lead to a radio link setup request (PsDchPsDch)

Data Source

RNC C-Node

Source Field

VS.RadioLinkSetupRequest.PsDchPsDch

Source Section

FddCell

RadioLinkSetupRequestPsDchPsHsdpa

Number of internal events that would lead to a radio link setup request (PsDchPsHsdpa)

Data Source

RNC C-Node

Source Field

VS.RadioLinkSetupRequest.PsDchPsHsdpa

Source Section

FddCell

RadioLinkSetupRequestPsHsdpaDchUl

Number of internal events that would lead to a radio link setup request (PsHsdpaDchUl)

Data Source

RNC C-Node

Source Field

VS.RadioLinkSetupRequest.PsHsdpaDchUl

Source Section

FddCell

RadioLinkSetupRequestPsHsdpaDlDchEdchUl

Number of internal events that would lead to a radio link setup request (PsHsdpaDlDchEdchUl)

Data Source

RNC C-Node

Source Field

VS.RadioLinkSetupRequest.PsHsdpaDlDchEdchUl

Source Section

FddCell

RadioLinkSetupRequestPsHsdpaDlEdchUl

Number of internal events that would lead to a radio link setup request (PsHsdpaDlEdchUl)

Data Source

RNC C-Node

Source Field

VS.RadioLinkSetupRequest.PsHsdpaDlEdchUl

Source Section

FddCell

RadioLinkSetupRequestSig

Number of internal events that would lead to a radio link setup request (Sig)

Data Source

RNC C-Node

© Copyright IBM Corp. 1999, 2009. All rights reserved.

Source Field

VS.RadioLinkSetupRequest.Sig

Source Section

FddCell

RadioLinkSetupSuccessCsData

Number of successful radio link setup (CsData)

Data Source

RNC C-Node

Source Field

VS.RadioLinkSetupSuccess.CsData

Source Section

FddCell

RadioLinkSetupSuccessCsDataPsDch

Number of successful radio link setup (CsDataPsDch)

Data Source

RNC C-Node

Source Field

VS.RadioLinkSetupSuccess.CsDataPsDch

Source Section

FddCell

RadioLinkSetupSuccessCsDataPsHsdpa

Number of successful radio link setup (CsDataPsHsdpa)

Data Source

RNC C-Node

Source Field

VS.RadioLinkSetupSuccess.CsDataPsHsdpa

Source Section

FddCell

RadioLinkSetupSuccessCsSpeech

Number of successful radio link setup (CsSpeech)

Data Source

RNC C-Node

Source Field

VS.RadioLinkSetupSuccess.CsSpeech

Source Section

FddCell

RadioLinkSetupSuccessCsSpeechHsdpa

Number of successful radio link setup (CsSpeechHsdpa)

Data Source

RNC C-Node

Source Field

VS.RadioLinkSetupSuccess.CsSpeechHsdpa

Source Section

FddCell

RadioLinkSetupSuccessCsSpeechPsDch

Number of successful radio link setup (CsSpeechPsDch)

Data Source

RNC C-Node

Source Field

VS.RadioLinkSetupSuccess.CsSpeechPsDch

Source Section

FddCell

© Copyright IBM Corp. 1999, 2009. All rights reserved.

RadioLinkSetupSuccessCsSpeechPsDchPsDch

Number of successful radio link setup (CsSpeechPsDchPsDch)

Data Source

RNC C-Node

Source Field

VS.RadioLinkSetupSuccess.CsSpeechPsDchPsDch

Source Section

FddCell

RadioLinkSetupSuccessCsSpeechPsDchPsHsdpa

Number of successful radio link setup (CsSpeechPsDchPsHsdpa)

Data Source

RNC C-Node

Source Field

VS.RadioLinkSetupSuccess.CsSpeechPsDchPsHsdpa

Source Section

FddCell

RadioLinkSetupSuccessCsStr

Number of successful radio link setup (CsStr)

Data Source

RNC C-Node

Source Field

VS.RadioLinkSetupSuccess.CsStr

Source Section

FddCell

RadioLinkSetupSuccessOther

Number of successful radio link setup (Other)

Data Source

RNC C-Node

Source Field

VS.RadioLinkSetupSuccess.Other

Source Section

FddCell

RadioLinkSetupSuccessPsDchDlDchUl

Number of successful radio link setup (PsDchDlDchUl)

Data Source

RNC C-Node

Source Field

VS.RadioLinkSetupSuccess.PsDchDlDchUl

Source Section

FddCell

RadioLinkSetupSuccessPsDchPsDch

Number of successful radio link setup (PsDchPsDch)

Data Source

RNC C-Node

Source Field

VS.RadioLinkSetupSuccess.PsDchPsDch

Source Section

FddCell

RadioLinkSetupSuccessPsDchPsHsdpa

Number of successful radio link setup (PsDchPsHsdpa)

Data Source

RNC C-Node

© Copyright IBM Corp. 1999, 2009. All rights reserved.

Source Field

VS.RadioLinkSetupSuccess.PsDchPsHsdpa

Source Section

FddCell

RadioLinkSetupSuccessPsHsdpaDchUl

Number of successful radio link setup (PsHsdpaDchUl)

Data Source

RNC C-Node

Source Field

VS.RadioLinkSetupSuccess.PsHsdpaDchUl

Source Section

FddCell

RadioLinkSetupSuccessPsHsdpaDlDchEdchUl

Number of successful radio link setup (PsHsdpaDlDchEdchUl)

Data Source

RNC C-Node

Source Field

VS.RadioLinkSetupSuccess.PsHsdpaDlDchEdchUl

Source Section

FddCell

RadioLinkSetupSuccessPsHsdpaDlEdchUl

Number of successful radio link setup (PsHsdpaDlEdchUl)

Data Source

RNC C-Node

Source Field

VS.RadioLinkSetupSuccess.PsHsdpaDlEdchUl

Source Section

FddCell

RadioLinkSetupSuccessSig

Number of successful radio link setup (Sig)

Data Source

RNC C-Node

Source Field

VS.RadioLinkSetupSuccess.Sig

Source Section

FddCell

RadioLinkSetupUnsuccessInodeRefusal

Number of unsuccessful radio link setup (InodeRefusal)

Data Source

RNC C-Node

Source Field

VS.RadioLinkSetupUnsuccess.InodeRefusal

Source Section

FddCell

RadioLinkSetupUnsuccessIubLayerCongestion

Number of unsuccessful radio link setup (IubLayerCongestion)

Data Source

RNC C-Node

Source Field

VS.RadioLinkSetupUnsuccess.IubLayerCongestion

Source Section

FddCell

© Copyright IBM Corp. 1999, 2009. All rights reserved.

RadioLinkSetupUnsuccessLackBwthIub

Number of unsuccessful radio link setup (LackBwthIub)

Data Source

RNC C-Node

Source Field

VS.RadioLinkSetupUnsuccess.LackBwthIub

Source Section

FddCell

RadioLinkSetupUnsuccessLackCidOrUdpPortIub

Number of unsuccessful radio link setup (LackCidOrUdpPortIub)

Data Source

RNC C-Node

Source Field

VS.RadioLinkSetupUnsuccess.LackCidOrUdpPortIub

Source Section

FddCell

RadioLinkSetupUnsuccessNodeBCEMLackL1Rsrc

Number of unsuccessful radio link setup (NodeBCEMLackL1Rsrc)

Data Source

RNC C-Node

Source Field

VS.RadioLinkSetupUnsuccess.NodeBCEMLackL1Rsrc

Source Section

FddCell

RadioLinkSetupUnsuccessNodeBOutOfOrder

Number of unsuccessful radio link setup (NodeBOutOfOrder)

Data Source

RNC C-Node

Source Field

VS.RadioLinkSetupUnsuccess.NodeBOutOfOrder

Source Section

FddCell

RadioLinkSetupUnsuccessRadioLinkSetupFailure

Number of unsuccessful radio link setup (RadioLinkSetupFailure)

Data Source

RNC C-Node

Source Field

VS.RadioLinkSetupUnsuccess.RadioLinkSetupFailure

Source Section

FddCell

RadioLinkSetupUnsuccessRrmRefusal

Number of unsuccessful radio link setup (RrmRefusal)

Data Source

RNC C-Node

Source Field

VS.RadioLinkSetupUnsuccess.RrmRefusal

Source Section

FddCell

RadioLinkSetupUnsuccessTimeOut

Number of unsuccessful radio link setup (TimeOut)

Data Source

RNC C-Node

© Copyright IBM Corp. 1999, 2009. All rights reserved.

Source Field

VS.RadioLinkSetupUnsuccess.TimeOut

Source Section

FddCell

RB_ReconfAtt_HSDSCH_DCH_sum

Total Number of RB Reconfiguration Attempts: HS-DSCH to DCH

Data Source

RNC

Source Field

VS.RB.ReconfAtt.HSDSCH_DCH.sum

Source Section

Radio Bearer Reconfiguration HS-DSCH to DCH

RB_ReconfAtt_PSStrm_HSDSCH_DCH_cellsupport

This measurement counts the total number of RB reconfiguration attempts for transition from HS-DSCH to DCH for a streaming RAB. This counter provides the total RNC attempts to transition a UE from HS-DSCH to DCH with a Streaming RAB due to Streaming HSDPA being disabled in the cell due to OAM configuration.

Data Source

RNC

Source Field

VS.RB.ReconfAtt.PSStrm.HSDSCH_DCH.cellsupport

Source Section

Radio Bearer Reconfiguration HS-DSCH to DCH

RB_ReconfAtt_PSStrm_HSDSCH_DCH_Cmfail

This measurement counts the total number of RB reconfiguration attempts for transition from HS-DSCH to DCH for a streaming RAB. This counter provides the total RNC attempts to transition a UE from HS-DSCH to DCH with a Streaming RAB due to compressed mode failure.

Data Source

RNC

Source Field

VS.RB.ReconfAtt.PSStrm.HSDSCH_DCH.CMfail

Source Section

Radio Bearer Reconfiguration HS-DSCH to DCH

RB_ReconfAtt_PSStrm_HSDSCH_DCH_RLF

This measurement counts the total number of RB reconfiguration attempts for transition from HS-DSCH to DCH for a streaming RAB. This counter provides the total RNC attempts to transition a UE from HS-DSCH to DCH with a Streaming RAB due to radio link failure on the HSDPA serving cell.

Data Source

RNC

Source Field

VS.RB.ReconfAtt.PSStrm.HSDSCH_DCH.RLF

Source Section

Radio Bearer Reconfiguration HS-DSCH to DCH

RB_ReconfAtt_PSStrm_HSDSCH_DCH_sum

This measurement counts the total number of RB reconfiguration attempts for transition from HS-DSCH to DCH for a streaming RAB. This counter provides the total RNC attempts to transition a UE from HS-DSCH to DCH with a Streaming RAB.

Data Source

RNC

Source Field

VS.RB.ReconfAtt.PSStrm.HSDSCH_DCH.sum

Source Section

Radio Bearer Reconfiguration HS-DSCH to DCH

© Copyright IBM Corp. 1999, 2009. All rights reserved.

RB_ReconfFail_HSDSCH_DCH_causeDBC

Number of Failed RB Reconfiguration Attempts: HS-DSCH to DCH due to DBC

Data Source

RNC

Source Field

VS.RB.ReconfFail.HSDSCH_DCH.causeDBC

Source Section

Radio Bearer Reconfiguration HS-DSCH to DCH

RB_ReconfFail_HSDSCH_DCH_sum

Total Number of Failed RB Reconfiguration: HS-DSCH to DCH

Data Source

RNC

Source Field

VS.RB.ReconfFail.HSDSCH_DCH.sum

Source Section

Radio Bearer Reconfiguration HS-DSCH to DCH

RbEstabUnsucPerDlRbTypeTgtCallCsData

Number of Radio Bearer setups not successfully established, with no RADIO_BEARER_SETUP_REQUEST sent, this counter is pegged per DL RB Set rather than per procedure. The counter should be pegged multiple times for multiple RB that failed to be setup in the same procedure. (TgtCallCsData)

Data Source

RNC C-Node

Source Field

VS.RbEstabUnsucPerDlRbType.TgtCallCsData

Source Section

FddCell

RbEstabUnsucPerDlRbTypeTgtCallCsSpeechNbLrAmr

Number of Radio Bearer setups not successfully established, with no RADIO_BEARER_SETUP_REQUEST sent, this counter is pegged per DL RB Set rather than per procedure. The counter should be pegged multiple times for multiple RB that failed to be setup in the same procedure. (TgtCallCsSpeechNbLrAmr)

Data Source

RNC C-Node

Source Field

VS.RbEstabUnsucPerDlRbType.TgtCallCsSpeechNbLrAmr

Source Section

FddCell

RbEstabUnsucPerDlRbTypeTgtCallCsSpeechWbAmr

Number of Radio Bearer setups not successfully established, with no RADIO_BEARER_SETUP_REQUEST sent, this counter is pegged per DL RB Set rather than per procedure. The counter should be pegged multiple times for multiple RB that failed to be setup in the same procedure. (TgtCallCsSpeechWbAmr)

Data Source

RNC C-Node

Source Field

VS.RbEstabUnsucPerDlRbType.TgtCallCsSpeechWbAmr

Source Section

FddCell

RbEstabUnsucPerDlRbTypeTgtCallCsStr

Number of Radio Bearer setups not successfully established, with no RADIO_BEARER_SETUP_REQUEST sent, this counter is pegged per DL RB Set rather than per procedure. The counter should be pegged multiple times for multiple RB that failed to be setup in the same procedure. (TgtCallCsStr)

Data Source

RNC C-Node

© Copyright IBM Corp. 1999, 2009. All rights reserved.

Source Field

VS.RbEstabUnsucPerDlRbType.TgtCallCsStr

Source Section

FddCell

RbEstabUnsucPerDlRbTypeTgtCallHsdpaEdch

Number of Radio Bearer setups not successfully established, with no RADIO_BEARER_SETUP_REQUEST sent, this counter is pegged per DL RB Set rather than per procedure. The counter should be pegged multiple times for multiple RB that failed to be setup in the same procedure. (TgtCallHsdpaEdch)

Data Source

RNC C-Node

Source Field

VS.RbEstabUnsucPerDlRbType.TgtCallHsdpaEdch

Source Section

FddCell

RbEstabUnsucPerDlRbTypeTgtCallHsdpaR99

Number of Radio Bearer setups not successfully established, with no RADIO_BEARER_SETUP_REQUEST sent, this counter is pegged per DL RB Set rather than per procedure. The counter should be pegged multiple times for multiple RB that failed to be setup in the same procedure. (TgtCallHsdpaR99)

Data Source

RNC C-Node

Source Field

VS.RbEstabUnsucPerDlRbType.TgtCallHsdpaR99

Source Section

FddCell

RbEstabUnsucPerDlRbTypeTgtCallOther

Number of Radio Bearer setups not successfully established, with no RADIO_BEARER_SETUP_REQUEST sent, this counter is pegged per DL RB Set rather than

per procedure. The counter should be pegged multiple times for multiple RB that failed to be setup in the same procedure. (TgtCallOther)

Data Source

RNC C-Node

Source Field

VS.RbEstabUnsucPerDlRbType.TgtCallOther

Source Section

FddCell

RbEstabUnsucPerDlRbTypeTgtCallPsIb128

Number of Radio Bearer setups not successfully established, with no RADIO_BEARER_SETUP_REQUEST sent, this counter is pegged per DL RB Set rather than per procedure. The counter should be pegged multiple times for multiple RB that failed to be setup in the same procedure. (TgtCallPsIb128)

Data Source

RNC C-Node

Source Field

VS.RbEstabUnsucPerDlRbType.TgtCallPsIb128

Source Section

FddCell

RbEstabUnsucPerDlRbTypeTgtCallPsIb256

Number of Radio Bearer setups not successfully established, with no RADIO_BEARER_SETUP_REQUEST sent, this counter is pegged per DL RB Set rather than per procedure. The counter should be pegged multiple times for multiple RB that failed to be setup in the same procedure. (TgtCallPsIb256)

Data Source

RNC C-Node

Source Field

VS.RbEstabUnsucPerDlRbType.TgtCallPsIb256

© Copyright IBM Corp. 1999, 2009. All rights reserved.

Source Section

FddCell

RbEstabUnsucPerDlRbTypeTgtCallPsIb384

Number of Radio Bearer setups not successfully established, with no RADIO_BEARER_SETUP_REQUEST sent, this counter is pegged per DL RB Set rather than per procedure. The counter should be pegged multiple times for multiple RB that failed to be setup in the same procedure. (TgtCallPsIb384)

Data Source

RNC C-Node

Source Field

VS.RbEstabUnsucPerDlRbType.TgtCallPsIb384

Source Section

FddCell

RbEstabUnsucPerDlRbTypeTgtCallPsIb64

Number of Radio Bearer setups not successfully established, with no RADIO_BEARER_SETUP_REQUEST sent, this counter is pegged per DL RB Set rather than per procedure. The counter should be pegged multiple times for multiple RB that failed to be setup in the same procedure. (TgtCallPsIb64)

Data Source

RNC C-Node

Source Field

VS.RbEstabUnsucPerDlRbType.TgtCallPsIb64

Source Section

FddCell

RbEstabUnsucPerDlRbTypeTgtCallPsIbLt64

Number of Radio Bearer setups not successfully established, with no RADIO_BEARER_SETUP_REQUEST sent, this counter is pegged per DL RB Set rather than per procedure. The counter should be pegged multiple times for multiple RB that failed to be setup in the same procedure. (TgtCallPsIbLt64)

Data Source

RNC C-Node

Source Field

VS.RbEstabUnsucPerDlRbType.TgtCallPsIbLt64

Source Section

FddCell

RbEstabUnsucPerDlRbTypeTgtCallPsStr128

Number of Radio Bearer setups not successfully established, with no RADIO_BEARER_SETUP_REQUEST sent, this counter is pegged per DL RB Set rather than per procedure. The counter should be pegged multiple times for multiple RB that failed to be setup in the same procedure. (TgtCallPsStr128)

Data Source

RNC C-Node

Source Field

VS.RbEstabUnsucPerDlRbType.TgtCallPsStr128

Source Section

FddCell

RbEstabUnsucPerDlRbTypeTgtCallPsStr256

Number of Radio Bearer setups not successfully established, with no RADIO_BEARER_SETUP_REQUEST sent, this counter is pegged per DL RB Set rather than per procedure. The counter should be pegged multiple times for multiple RB that failed to be setup in the same procedure. (TgtCallPsStr256)

Data Source

RNC C-Node

Source Field

VS.RbEstabUnsucPerDlRbType.TgtCallPsStr256

Source Section

FddCell

© Copyright IBM Corp. 1999, 2009. All rights reserved.

RbEstabUnsucPerDlRbTypeTgtCallPsStr384

Number of Radio Bearer setups not successfully established, with no RADIO_BEARER_SETUP_REQUEST sent, this counter is pegged per DL RB Set rather than per procedure. The counter should be pegged multiple times for multiple RB that failed to be setup in the same procedure. (TgtCallPsStr384)

Data Source

RNC C-Node

Source Field

VS.RbEstabUnsucPerDlRbType.TgtCallPsStr384

Source Section

FddCell

RbEstabUnsucPerDlRbTypeTgtCallPsStr64

Number of Radio Bearer setups not successfully established, with no RADIO_BEARER_SETUP_REQUEST sent, this counter is pegged per DL RB Set rather than per procedure. The counter should be pegged multiple times for multiple RB that failed to be setup in the same procedure. (TgtCallPsStr64)

Data Source

RNC C-Node

Source Field

VS.RbEstabUnsucPerDlRbType.TgtCallPsStr64

Source Section

FddCell

RbEstabUnsucPerDlRbTypeTgtCallPsStrLt64

Number of Radio Bearer setups not successfully established, with no RADIO_BEARER_SETUP_REQUEST sent, this counter is pegged per DL RB Set rather than per procedure. The counter should be pegged multiple times for multiple RB that failed to be setup in the same procedure. (TgtCallPsStrLt64)

Data Source

RNC C-Node

Source Field

VS.RbEstabUnsucPerDlRbType.TgtCallPsStrLt64

Source Section

FddCell

RBReconfReqPerUlTrChEdchOnly

Number of RB Reconfiguration decisions (leading or not to a RB Setup/RB Reconfiguration, I.e. incremented even if CAC rejects the reconfiguration) screened per target transport channel type. (EdchOnly)

Data Source

RNC C-Node

Source Field

VS.RBReconfReqPerUlTrCh.EdchOnly

Source Section

FddCell

RBReconfReqPerUlTrChOther

Number of RB Reconfiguration decisions (leading or not to a RB Setup/RB Reconfiguration, I.e. incremented even if CAC rejects the reconfiguration) screened per target transport channel type. (Other)

Data Source

RNC C-Node

Source Field

VS.RBReconfReqPerUlTrCh.Other

Source Section

FddCell

RBReconfReqPerUlTrChR99AndEdch

Number of RB Reconfiguration decisions (leading or not to a RB Setup/RB Reconfiguration, I.e. incremented even if CAC rejects the reconfiguration) screened per target transport channel type. (R99AndEdch)

© Copyright IBM Corp. 1999, 2009. All rights reserved.

Data Source

RNC C-Node

Source Field

VS.RBReconfReqPerUlTrCh.R99AndEdch

Source Section

FddCell

RBReconfReqPerUlTrChR99Only

Number of RB Reconfiguration decisions (leading or not to a RB Setup/RB Reconfiguration, I.e. incremented even if CAC rejects the reconfiguration) screened per target transport channel type. (R99Only)

Data Source

RNC C-Node

Source Field

VS.RBReconfReqPerUlTrCh.R99Only

Source Section

FddCell

RBReconfSuccPerUlTrChEdchOnly

Number of Radio Bearer reconfigured (target UL bearer). This counter is also pegged in case of hard handover procedure and transitions from PCH to DCH involving the reception of a 'RB reconfiguration complete' message. (EdchOnly)

Data Source

RNC C-Node

Source Field

VS.RBReconfSuccPerUlTrCh.EdchOnly

Source Section

FddCell

RBReconfSuccPerUlTrChOther

Number of Radio Bearer reconfigured (target UL bearer). This counter is also pegged in case of hard handover procedure and transitions from PCH to DCH involving the reception of a 'RB reconfiguration complete' message. (Other)

Data Source

RNC C-Node

Source Field

VS.RBReconfSuccPerUlTrCh.Other

Source Section

FddCell

RBReconfSuccPerUlTrChR99AndEdch

Number of Radio Bearer reconfigured (target UL bearer). This counter is also pegged in case of hard handover procedure and transitions from PCH to DCH involving the reception of a 'RB reconfiguration complete' message. (R99AndEdch)

Data Source

RNC C-Node

Source Field

VS.RBReconfSuccPerUlTrCh.R99AndEdch

Source Section

FddCell

RBReconfSuccPerUlTrChR99Only

Number of Radio Bearer reconfigured (target UL bearer). This counter is also pegged in case of hard handover procedure and transitions from PCH to DCH involving the reception of a 'RB reconfiguration complete' message. (R99Only)

Data Source

RNC C-Node

Source Field

VS.RBReconfSuccPerUlTrCh.R99Only

© Copyright IBM Corp. 1999, 2009. All rights reserved.

Source Section

FddCell

RBSetupReqPerUlBitRateDchHighBitRate

Number of Radio Bearer setup decisions (leading or not to a RB Setup, I.e., incremented even if CAC rejects the setup). Incremented based on reference cell. This counter is pegged per UL RB Set rather than per procedure meaning that it is pegged multiple times for multiple RB to be setup in the same procedure. This counter is only applicable to PS radio bearers (CS radio bearers could be monitored using the corresponding counters per DlBitRate). (DchHighBitRate)

Data Source

RNC C-Node

Source Field

VS.RBSetupReqPerUlBitRate.DchHighBitRate

Source Section

FddCell

RBSetupReqPerUlBitRateDchLowBitRate

Number of Radio Bearer setup decisions (leading or not to a RB Setup, I.e., incremented even if CAC rejects the setup). Incremented based on reference cell. This counter is pegged per UL RB Set rather than per procedure meaning that it is pegged multiple times for multiple RB to be setup in the same procedure. This counter is only applicable to PS radio bearers (CS radio bearers could be monitored using the corresponding counters per DlBitRate). (DchLowBitRate)

Data Source

RNC C-Node

Source Field

VS.RBSetupReqPerUlBitRate.DchLowBitRate

Source Section

FddCell

RBSetupReqPerUlBitRateEdch

Number of Radio Bearer setup decisions (leading or not to a RB Setup, I.e., incremented even if CAC rejects the setup). Incremented based on reference cell. This counter is pegged per UL RB Set rather than per procedure meaning that it is pegged multiple times for multiple RB to be

setup in the same procedure. This counter is only applicable to PS radio bearers (CS radio bearers could be monitored using the corresponding counters per DlBitRate). (Edch)

Data Source

RNC C-Node

Source Field

VS.RBSetupReqPerUlBitRate.Edch

Source Section

FddCell

RBSetupReqPerUlBitRateOther

Number of Radio Bearer setup decisions (leading or not to a RB Setup, I.e., incremented even if CAC rejects the setup). Incremented based on reference cell. This counter is pegged per UL RB Set rather than per procedure meaning that it is pegged multiple times for multiple RB to be setup in the same procedure. This counter is only applicable to PS radio bearers (CS radio bearers could be monitored using the corresponding counters per DlBitRate). (Other)

Data Source

RNC C-Node

Source Field

VS.RBSetupReqPerUlBitRate.Other

Source Section

FddCell

RBSetupSuccPerUlBitRateDchHighBitRate

Number of Radio Bearer setup successfully. This counter is pegged per UL RB Set rather than per procedure meaning that it is pegged multiple times for multiple RB successfully setup in the same procedure. This counter is only applicable to PS radio bearers (CS radio bearers could be monitored using the corresponding counters per DlBitRate). Should be incremented by reference cell. (DchHighBitRate)

Data Source

RNC C-Node

Source Field

VS.RBSetupSuccPerUlBitRate.DchHighBitRate

© Copyright IBM Corp. 1999, 2009. All rights reserved.

Source Section

FddCell

RBSetupSuccPerUlBitRateDchLowBitRate

Number of Radio Bearer setup successfully. This counter is pegged per UL RB Set rather than per procedure meaning that it is pegged multiple times for multiple RB successfully setup in the same procedure. This counter is only applicable to PS radio bearers (CS radio bearers could be monitored using the corresponding counters per DlBitRate). Should be incremented by reference cell. (DchLowBitRate)

Data Source

RNC C-Node

Source Field

VS.RBSetupSuccPerUlBitRate.DchLowBitRate

Source Section

FddCell

RBSetupSuccPerUlBitRateEdch

Number of Radio Bearer setup successfully. This counter is pegged per UL RB Set rather than per procedure meaning that it is pegged multiple times for multiple RB successfully setup in the same procedure. This counter is only applicable to PS radio bearers (CS radio bearers could be monitored using the corresponding counters per DlBitRate). Should be incremented by reference cell. (Edch)

Data Source

RNC C-Node

Source Field

VS.RBSetupSuccPerUlBitRate.Edch

Source Section

FddCell

RBSetupSuccPerUlBitRateOther

Number of Radio Bearer setup successfully. This counter is pegged per UL RB Set rather than per procedure meaning that it is pegged multiple times for multiple RB successfully setup in the same procedure. This counter is only applicable to PS radio bearers (CS radio bearers could be

monitored using the corresponding counters per DlBitRate). Should be incremented by reference cell. (Other)

Data Source

RNC C-Node

Source Field

VS.RBSetupSuccPerUlBitRate.Other

Source Section

FddCell

ReceivedPagingRequestType2CellDchWithCoreNetworkCs

Number of received paging requests received for UEs in Cell_DCH state (WithCoreNetworkCs)

Data Source

RNC C-Node

Source Field

VS.ReceivedPagingRequestType2CellDch.WithCoreNetworkCs

Source Section

FddCell

ReceivedPagingRequestType2CellDchWithCoreNetworkPs

Number of received paging requests received for UEs in Cell_DCH state (WithCoreNetworkPs)

Data Source

RNC C-Node

Source Field

VS.ReceivedPagingRequestType2CellDch.WithCoreNetworkPs

Source Section

FddCell

ReceivedPagingRequestType2CellFachWithCoreNetworkCs

Number of received paging requests received for UEs in Cell_FACH state (WithCoreNetworkCs)

© Copyright IBM Corp. 1999, 2009. All rights reserved.

Data Source

RNC C-Node

Source Field

VS.ReceivedPagingRequestType2CellFach.WithCoreNetworkCs

Source Section

FddCell

ReceivedPagingRequestType2CellFachWithCoreNetworkPs

Number of received paging requests received for UEs in Cell_FACH state (WithCoreNetworkPs)

Data Source

RNC C-Node

Source Field

VS.ReceivedPagingRequestType2CellFach.WithCoreNetworkPs

Source Section

FddCell

ReconfAtt_0kbps_DCH

Reconfiguration Attempts due to Traffic Activity : 0kbps to DCH/DCH

Data Source

RNC

Source Field

VS.ReconfAtt.0kbps_DCH

Source Section

UtranCell

ReconfAtt_0kbps_HSDSCH

Reconfiguration Attempts due to Traffic Activity : 0kbps to HS-DSCH/DCH

Data Source

RNC

Source Field

VS.ReconfAtt.0kbps_HSDSCH

Source Section

UtranCell

ReconfAtt_DCH_HSDSCH

Total Number of RB Reconfiguration Attempts: DCH to HS-DSCH

Data Source

RNC

Source Field

VS.ReconfAtt.DCH_HSDSCH

Source Section

Radio Bearer Reconfiguration DCH to HS-DSCH

ReconfAtt_EDCH_HSDSCH_ULDCH_DLDCH

Total Number of Reconfiguration Attempts from E-DCH to UL DCH combined with HS-DSCH to DL DCH

Data Source

RNC

Source Field

VS.ReconfAtt.EDCH-HSDSCH_ULDCH-DLDCH

Source Section

UtranCell

ReconfAtt_EDCH_HSDSCH_ULDCH_HSDSCH

Total Number of Reconfiguration Attempts UL E-DCH/HS-DSCH to DCH/HS-DSCH

© Copyright IBM Corp. 1999, 2009. All rights reserved.

Data Source

RNC

Source Field

VS.ReconfAtt.EDCH-HSDSCH_ULDCH-HSDSCH

Source Section

UtranCell

ReconfAtt_ULDCH_HSDSCH_EDCH_HSDSCH

Total Number of Reconfiguration Attempts UL DCH/HS-DSCH to E-DCH/HS-DSCH

Data Source

RNC

Source Field

VS.ReconfAtt.ULDCH-HSDSCH_EDCH-HSDSCH

Source Section

UtranCell

ReconfFail_DCH_HSDSCH_causeDBC

Number of Failed RB Reconfiguration Attempts: DCH to HS-DSCH due to DBC

Data Source

RNC

Source Field

VS.ReconfFail.DCH_HSDSCH.causeDBC

Source Section

Radio Bearer Reconfiguration DCH to HS-DSCH

ReconfFail_DCH_HSDSCH_sum

Total Number of Failed RB Reconfiguration: DCH to HS-DSCH

Data Source

RNC

Source Field

VS.ReconfFail.DCH_HSDSCH.sum

Source Section

Radio Bearer Reconfiguration DCH to HS-DSCH

ReconfFail_EDCH_HSDSCH_ULDCH_DLDCH_DBC

Number of Failed Reconfiguration E-DCH to DCH combined with HS-DSCH to DCH due to DBC

Data Source

RNC

Source Field

VS.ReconfFail.EDCH-HSDSCH_ULDCH-DLDCH.causeDBC

Source Section

UtranCell

ReconfFail_EDCH_HSDSCH_ULDCH_HSDSCH_DBC

Number of Failed Reconfiguration Attempts for a E-DCH to UL DCH transition with existing HS-DSCH due to DBC

Data Source

RNC

Source Field

VS.ReconfFail.EDCH-HSDSCH_ULDCH-HSDSCH.causeDBC

Source Section

UtranCell

ReconfFail_ULDCH_HSDSCH_EDCH_HSDSCH_DBC

Number of Failed Reconfiguration Attempts for a UL DCH to E-DCH transition with existing HS-DSCH due to DBC

Data Source

RNC

© Copyright IBM Corp. 1999, 2009. All rights reserved.

Source Field

VS.ReconfFail.ULDCH-HSDSCH_EDCH-HSDSCH.causeDBC

Source Section

UtranCell

ReconfSucc_0kbps_DCH

Reconfiguration Success due to Traffic Activity: 0kbps to DCH/DCH

Data Source

RNC

Source Field

VS.ReconfSucc.0kbps_DCH

Source Section

UtranCell

ReconfSucc_0kbps_HSDSCH

Reconfiguration Success due to Traffic Activity: 0kbps to HS-DSCH/DCH

Data Source

RNC

Source Field

VS.ReconfSucc.0kbps_HSDSCH

Source Section

UtranCell

ReconfSucc_EDCH_HSDSCH_ULDCH_DLDCH

Total Number of Successful Reconfiguration from E-DCH to DCH combined with a reconfiguration HS-DSCH to DCH

Data Source

RNC

Source Field

VS.ReconfSucc.EDCH-HSDSCH_ULDCH-DLDCH

Source Section

UtranCell

ReconfSucc_EDCH_HSDSCH_ULDCH_HSDSCH

Total Number of Successful Reconfiguration E-DCH/HS-DSCH to UL DCH/HS-DSCH

Data Source

RNC

Source Field

VS.ReconfSucc.EDCH-HSDSCH_ULDCH-HSDSCH

Source Section

UtranCell

ReconfSucc_ULDCH_HSDSCH_EDCH_HSDSCH

Total Number of Successful Reconfiguration UL DCH/HS-DSCH to E-DCH/HS-DSCH

Data Source

RNC

Source Field

VS.ReconfSucc.ULDCH-HSDSCH_EDCH-HSDSCH

Source Section

UtranCell

ReconfSucc0kbpsDCH

Reconfiguration Success due to Traffic Activity: 0kbps to DCH/DCH (DCH)

Data Source

RNC C-Node

Source Field

VS.ReconfSucc.0kbps.DCH

© Copyright IBM Corp. 1999, 2009. All rights reserved.

Source Section

FddCell

ReconfSucc0kbpsHSDSCH

Reconfiguration Success due to Traffic Activity: 0kbps to HSDSCH/DCH (HSDSCH)

Data Source

RNC C-Node

Source Field

VS.ReconfSucc.0kbps.HSDSCH

Source Section

FddCell

RELOC_AttCS_UEInvol

Attempted relocations with UE involved for CS domain

Data Source

RNC

Source Field

RELOC.AttCS.UEInvol

Source Section

UtranCell

RELOC_AttPrepUEInvolCS

Attempted relocation preparations with UE involved for CS domain

Data Source

RNC

Source Field

RELOC.AttPrepUEInvolCS

Source Section

UtranCell

RELOC_AttPrepUEInvolPS

Attempted relocation preparations with UE involved for PS domain

Data Source

RNC

Source Field

RELOC.AttPrepUEInvolPS

Source Section

UtranCell

RELOC_AttPS_UEInvol

Attempted relocations with UE involved for PS domain

Data Source

RNC

Source Field

RELOC.AttPS.UEInvol

Source Section

UtranCell

RELOC_FailCS_UEInvol

Failed relocations with UE involved for CS domain

Data Source

RNC

Source Field

RELOC.FailCS.UEInvol

Source Section

UtranCell

© Copyright IBM Corp. 1999, 2009. All rights reserved.

RELOC_FailPrepUEInvolCS_AbstSyntErr

Failed relocation preparations with UE involved for CS domain. Cause: Abstract Syntax Error (Reject) (100)

Data Source

RNC

Source Field

RELOC.FailPrepUEInvolCS.AbstSyntErr

Source Section

UtranCell

RELOC_FailPrepUEInvolCS_FailTarSys

Failed relocation preparations with UE involved for CS domain-Cause:Relocation Failure in Target System

Data Source

RNC

Source Field

RELOC.FailPrepUEInvolCS.FailTarSys

Source Section

Relocation preparations with UE involved for CS domain

RELOC_FailPrepUEInvolCS_Interaction

Failed relocation preparations with UE involved for CS domain. Cause: Interaction With Other Procedure (32)

Data Source

RNC

Source Field

RELOC.FailPrepUEInvolCS.Interaction

Source Section

UtranCell

RELOC_FailPrepUEInvolCS_NoResAv

Failed relocation preparations with UE involved for CS domain. Cause: No Resource Available (114)

Data Source

RNC

Source Field

RELOC.FailPrepUEInvolCS.NoResAv

Source Section

UtranCell

RELOC_FailPrepUEInvolCS_NoRRTarCell

Failed relocation preparations with UE involved for CS domain. Cause: No Radio Resources Available in Target Cell (53)

Data Source

RNC

Source Field

RELOC.FailPrepUEInvolCS.NoRRTarCell

Source Section

UtranCell

RELOC_FailPrepUEInvolCS_NotSupTarSys

Failed relocation preparations with UE involved for CS domain-Cause:Relocation not supported in Target System

Data Source

RNC

Source Field

RELOC.FailPrepUEInvolCS.NotSupTarSys

Source Section

Relocation preparations with UE involved for CS domain

© Copyright IBM Corp. 1999, 2009. All rights reserved.

RELOC_FailPrepUEInvolCS_OmInt

Failed relocation preparations with UE involved for CS domain. Cause: O&M Intervention (113)

Data Source

RNC

Source Field

RELOC.FailPrepUEInvolCS.OmInt

Source Section

UtranCell

RELOC_FailPrepUEInvolCS_RelocCanc

Failed relocation preparations with UE involved for CS domain. Cause: Relocation Cancelled (10)

Data Source

RNC

Source Field

RELOC.FailPrepUEInvolCS.RelocCanc

Source Section

UtranCell

RELOC_FailPrepUEInvolCS_ReqCiphNotSupp

Failed relocation preparations with UE involved for CS domain. Cause: Requested Ciphering and/or Integrity Protection Algorithms not Supported (12)

Data Source

RNC

Source Field

RELOC.FailPrepUEInvolCS.ReqCiphNotSupp

Source Section

UtranCell

RELOC_FailPrepUEInvolCS_sum

Failed relocation preparations with UE involved for CS domain-Cause:sum(all causes)

Data Source

RNC

Source Field

RELOC.FailPrepUEInvolCS.sum

Source Section

Relocation preparations with UE involved for CS domain

RELOC_FailPrepUEInvolCS_T_RELOCalloc_exp

Failed relocation preparations with UE involved for CS domain. Cause: TRELOCalloc Expiry (4)

Data Source

RNC

Source Field

RELOC.FailPrepUEInvolCS.T_RELOCalloc_exp

Source Section

UtranCell

RELOC_FailPrepUEInvolCS_T_RELOCprep_exp

Failed relocation preparations with UE involved for CS domain-Cause:expiry of timer T_RELOCprep

Data Source

RNC

Source Field

RELOC.FailPrepUEInvolCS.T_RELOCprep_exp

Source Section

Relocation preparations with UE involved for CS domain

© Copyright IBM Corp. 1999, 2009. All rights reserved.

RELOC_FailPrepUEInvolCS_TarNotAllowed

Failed relocation preparations with UE involved for CS domain. Cause: Relocation Target not allowed (50)

Data Source

RNC

Source Field

RELOC.FailPrepUEInvolCS.TarNotAllowed

Source Section

UtranCell

RELOC_FailPrepUEInvolCS_TrLdHighTarCell

Failed relocation preparations with UE involved for CS domain. Cause: Traffic Load In The Target Cell Higher Than In The Source Cell (57)

Data Source

RNC

Source Field

RELOC.FailPrepUEInvolCS.TrLdHighTarCell

Source Section

UtranCell

RELOC_FailPrepUEInvolCS_UnknownTRNC

Failed relocation preparations with UE involved for CS domain. Cause: Unknown Target RNC (9)

Data Source

RNC

Source Field

RELOC.FailPrepUEInvolCS.UnknownTRNC

Source Section

UtranCell

RELOC_FailPrepUEInvolCS_UnspecFail

Failed relocation preparations with UE involved for CS domain. Cause: Unspecified Failure (115)

Data Source

RNC

Source Field

RELOC.FailPrepUEInvolCS.UnspecFail

Source Section

UtranCell

RELOC_FailPrepUEInvolPS_AbstSyntErr

Failed relocation preparations with UE involved for PS domain. Cause: Abstract Syntax Error (Reject) (100)

Data Source

RNC

Source Field

RELOC.FailPrepUEInvolPS.AbstSyntErr

Source Section

UtranCell

RELOC_FailPrepUEInvolPS_FailTarSys

Failed relocation preparations with UE involved for PS domain. Cause: Relocation Failure in Target CN/RNC or Target system (29)

Data Source

RNC

Source Field

RELOC.FailPrepUEInvolPS.FailTarSys

Source Section

UtranCell

© Copyright IBM Corp. 1999, 2009. All rights reserved.

RELOC_FailPrepUEInvolPS_Interaction

Failed relocation preparations with UE involved for PS domain. Cause: Interaction With Other Procedure (32)

Data Source

RNC

Source Field

RELOC.FailPrepUEInvolPS.Interaction

Source Section

UtranCell

RELOC_FailPrepUEInvolPS_NoResAv

Failed relocation preparations with UE involved for PS domain. Cause: No Resource Available (114)

Data Source

RNC

Source Field

RELOC.FailPrepUEInvolPS.NoResAv

Source Section

UtranCell

RELOC_FailPrepUEInvolPS_NoRRTarCell

Failed relocation preparations with UE involved for PS domain. Cause: No Radio Resources Available in Target Cell (53)

Data Source

RNC

Source Field

RELOC.FailPrepUEInvolPS.NoRRTarCell

Source Section

UtranCell

RELOC_FailPrepUEInvolPS_NotSupTarSys

Failed relocation preparations with UE involved for PS domain. Cause: not supported in Target RNC or Target system (44)

Data Source

RNC

Source Field

RELOC.FailPrepUEInvolPS.NotSupTarSys

Source Section

UtranCell

RELOC_FailPrepUEInvolPS_OmInt

Failed relocation preparations with UE involved for PS domain. Cause: O&M Intervention (113)

Data Source

RNC

Source Field

RELOC.FailPrepUEInvolPS.OmInt

Source Section

UtranCell

RELOC_FailPrepUEInvolPS_RelocCanc

Failed relocation preparations with UE involved for PS domain. Cause: Relocation Cancelled (10)

Data Source

RNC

Source Field

RELOC.FailPrepUEInvolPS.RelocCanc

Source Section

UtranCell

© Copyright IBM Corp. 1999, 2009. All rights reserved.

RELOC_FailPrepUEInvolPS_ReqCiphNotSupp

Failed relocation preparations with UE involved for PS domain. Cause: Requested Ciphering and/or Integrity Protection Algorithms not Supported (12)

Data Source

RNC

Source Field

RELOC.FailPrepUEInvolPS.ReqCiphNotSupp

Source Section

UtranCell

RELOC_FailPrepUEInvolPS_sum

Failed relocation preparations with UE involved for PS domain. Sum of all causes

Data Source

RNC

Source Field

RELOC.FailPrepUEInvolPS.sum

Source Section

UtranCell

RELOC_FailPrepUEInvolPS_T_RELOCalloc_exp

Failed relocation preparations with UE involved for PS domain. Cause: TRELOCalloc Expiry (4)

Data Source

RNC

Source Field

RELOC.FailPrepUEInvolPS.T_RELOCalloc_exp

Source Section

UtranCell

RELOC_FailPrepUEInvolPS_T_RELOCprep_exp

Failed relocation preparations with UE involved for PS domain. Cause: T_RELOCprep Expiry

Data Source

RNC

Source Field

RELOC.FailPrepUEInvolPS.T_RELOCprep_exp

Source Section

UtranCell

RELOC_FailPrepUEInvolPS_TarNotAllowed

Failed relocation preparations with UE involved for PS domain. Cause: Relocation Target not allowed (50)

Data Source

RNC

Source Field

RELOC.FailPrepUEInvolPS.TarNotAllowed

Source Section

UtranCell

RELOC_FailPrepUEInvolPS_TrLdHighTarCell

Failed relocation preparations with UE involved for PS domain. Cause: Traffic Load In The Target Cell Higher Than In The Source Cell (57)

Data Source

RNC

Source Field

RELOC.FailPrepUEInvolPS.TrLdHighTarCell

Source Section

UtranCell

© Copyright IBM Corp. 1999, 2009. All rights reserved.

RELOC_FailPrepUEInvolPS_UnknownTRNC

Failed relocation preparations with UE involved for PS domain. Cause: Unknown Target RNC (9)

Data Source

RNC

Source Field

RELOC.FailPrepUEInvolPS.UnknownTRNC

Source Section

UtranCell

RELOC_FailPrepUEInvolPS_UnspecFail

Failed relocation preparations with UE involved for PS domain. Cause: Unspecified Failure (115)

Data Source

RNC

Source Field

RELOC.FailPrepUEInvolPS.UnspecFail

Source Section

UtranCell

RELOC_FailPS_UEInvol

Failed relocations with UE involved for PS domain

Data Source

RNC

Source Field

RELOC.FailPS.UEInvol

Source Section

UtranCell

RELOC_SuccCS_UEInvol

Successful relocations with UE involved for CS domain

Data Source

RNC

Source Field

RELOC.SuccCS.UEInvol

Source Section

UtranCell

RELOC_SuccPrepUEInvolCS

Successful relocation preparations with UE involved for CS domain

Data Source

RNC

Source Field

RELOC.SuccPrepUEInvolCS

Source Section

Relocation preparations with UE involved for CS domain

RELOC_SuccPrepUEInvolPS

Successful relocation preparations with UE involved for PS domain

Data Source

RNC

Source Field

RELOC.SuccPrepUEInvolPS

Source Section

UtranCell

RELOC_SuccPS_UEInvol

Successful relocations with UE involved for PS domain

© Copyright IBM Corp. 1999, 2009. All rights reserved.

Data Source

RNC

Source Field

RELOC.SuccPS.UEInvol

Source Section

UtranCell

RELOCAttCSUEInvol

Attempted relocations with UE involved for CS domain - indicating CS only and CS&PS combined relocation (UEInvol)

Data Source

RNC C-Node

Source Field

RELOC.AttCS.UEInvol

Source Section

FddCell

RELOCAttPrepCSUeInvol

Attempted relocation preparations in context UE involved SRNS relocation for CS domain. Note: SRNS relocation UE not involved is only applicable in case the best cell on the drift RNC (UeInvol)

Data Source

RNC C-Node

Source Field

RELOC.AttPrepCS.UeInvol

Source Section

FddCell

RELOCAttPrepPSUeInvol

Attempted relocation preparations in context UE involved SRNS relocation for PS domain. Note: SRNS relocation UE not involved is only applicable in case the best cell on the drift RNC (UeInvol)

Data Source

RNC C-Node

Source Field

RELOC.AttPrepPS.UeInvol

Source Section

FddCell

RELOCAttPSUEInvol

Attempted relocations with UE involved for PS domain - indicating PS only and CS&PS combined relocation (UEInvol)

Data Source

RNC C-Node

Source Field

RELOC.AttPS.UEInvol

Source Section

FddCell

RELOCCancelPrepCSCallRelUeInvol

Cancelled CS SRNS Relocation Preparations indicating normal call termination in context UE involved SRNS relocation. Note: SRNS relocation UE not involved is only applicable in case the best cell on the drift RNC (UeInvol)

Data Source

RNC C-Node

Source Field

VS.RELOC.CancelPrepCS.CallRel.UeInvol

© Copyright IBM Corp. 1999, 2009. All rights reserved.

Source Section

FddCell

RELOCCancelPrepPSCallRelUeInvol

Cancelled PS SRNS Relocation Preparations indicating normal call termination in context UE involved SRNS relocation. Note: SRNS relocation UE not involved is only applicable in case the best cell on the drift RNC (UeInvol)

Data Source

RNC C-Node

Source Field

VS.RELOC.CancelPrepPS.CallRel.UeInvol

Source Section

FddCell

RELOCSuccCSUEInvolNormalRel

Successful relocations with UE involved for CS domain (NormalRel)

Data Source

RNC C-Node

Source Field

RELOC.SuccCS.UEInvol.NormalRel

Source Section

FddCell

RELOCSuccCSUEInvolSuccReloc

Successful relocations with UE involved for CS domain (SuccReloc)

Data Source

RNC C-Node

Source Field

RELOC.SuccCS.UEInvol.SuccReloc

Source Section

FddCell

RELOCSuccPSUEInvolNormalRel

Successful relocations with UE involved for PS domain (NormalRel)

Data Source

RNC C-Node

Source Field

RELOC.SuccPS.UEInvol.NormalRel

Source Section

FddCell

RELOCSuccPSUEInvolSuccReloc

Successful relocations with UE involved for PS domain (SuccReloc)

Data Source

RNC C-Node

Source Field

RELOC.SuccPS.UEInvol.SuccReloc

Source Section

FddCell

ReqTypeAmrNbConfigAmrNbHighRate

Number of times an AMR configuration is requested at CS Narrow Band AMR RAB establishment (RAB setup and Relocation) with Iu UP version V1 requested by CN or chosen by RNC. (AmrNbHighRate)

Data Source

RNC C-Node

Source Field

VS.ReqTypeAmrNbConfig.AmrNbHighRate

© Copyright IBM Corp. 1999, 2009. All rights reserved.

Source Section

FddCell

ReqTypeAmrNbConfigAmrNbLowRate

Number of times an AMR configuration is requested at CS Narrow Band AMR RAB establishment (RAB setup and Relocation) with Iu UP version V1 requested by CN or chosen by RNC. (AmrNbLowRate)

Data Source

RNC C-Node

Source Field

VS.ReqTypeAmrNbConfig.AmrNbLowRate

Source Section

FddCell

RESERVED01

Reserving spare counters makes possible to address urgent requirements for new counters

Data Source

RNC C-Node

Source Field

VS.RESERVED01

Source Section

FddCell

RESERVED02

Reserving spare counters makes possible to address urgent requirements for new counters

Data Source

RNC C-Node

Source Field

VS.RESERVED02

Source Section

FddCell

RESERVED03

Reserving spare counters makes possible to address urgent requirements for new counters

Data Source

RNC C-Node

Source Field

VS.RESERVED03

Source Section

FddCell

RESERVED04

Reserving spare counters makes possible to address urgent requirements for new counters

Data Source

RNC C-Node

Source Field

VS.RESERVED04

Source Section

FddCell

RESERVED05

Reserving spare counters makes possible to address urgent requirements for new counters

Data Source

RNC C-Node

Source Field

VS.RESERVED05

Source Section

FddCell

© Copyright IBM Corp. 1999, 2009. All rights reserved.

RESERVED06

Reserving spare counters makes possible to address urgent requirements for new counters

Data Source

RNC C-Node

Source Field

VS.RESERVED06

Source Section

FddCell

RESERVED07

Reserving spare counters makes possible to address urgent requirements for new counters

Data Source

RNC C-Node

Source Field

VS.RESERVED07

Source Section

FddCell

RESERVED08

Reserving spare counters makes possible to address urgent requirements for new counters

Data Source

RNC C-Node

Source Field

VS.RESERVED08

Source Section

FddCell

RESERVED09

Reserving spare counters makes possible to address urgent requirements for new counters

Data Source

RNC C-Node

Source Field

VS.RESERVED09

Source Section

FddCell

RESERVED10

Reserving spare counters makes possible to address urgent requirements for new counters

Data Source

RNC C-Node

Source Field

VS.RESERVED10

Source Section

FddCell

RESERVED11

Reserving spare counters makes possible to address urgent requirements for new counters

Data Source

RNC C-Node

Source Field

VS.RESERVED11

Source Section

FddCell

RESERVED12

Reserving spare counters makes possible to address urgent requirements for new counters

Data Source

RNC C-Node

© Copyright IBM Corp. 1999, 2009. All rights reserved.

Source Field

VS.RESERVED12

Source Section

FddCell

RESERVED13

Reserving spare counters makes possible to address urgent requirements for new counters

Data Source

RNC C-Node

Source Field

VS.RESERVED13

Source Section

FddCell

RESERVED14

Reserving spare counters makes possible to address urgent requirements for new counters

Data Source

RNC C-Node

Source Field

VS.RESERVED14

Source Section

FddCell

RESERVED15

Reserving spare counters makes possible to address urgent requirements for new counters

Data Source

RNC C-Node

Source Field

VS.RESERVED15

Source Section

FddCell

RESERVED16

Reserving spare counters makes possible to address urgent requirements for new counters

Data Source

RNC C-Node

Source Field

VS.RESERVED16

Source Section

FddCell

RESERVED17

Reserving spare counters makes possible to address urgent requirements for new counters

Data Source

RNC C-Node

Source Field

VS.RESERVED17

Source Section

FddCell

RESERVED18

Reserving spare counters makes possible to address urgent requirements for new counters

Data Source

RNC C-Node

Source Field

VS.RESERVED18

Source Section

FddCell

© Copyright IBM Corp. 1999, 2009. All rights reserved.

RESERVED19

Reserving spare counters makes possible to address urgent requirements for new counters

Data Source

RNC C-Node

Source Field

VS.RESERVED19

Source Section

FddCell

RESERVED20

Reserving spare counters makes possible to address urgent requirements for new counters

Data Source

RNC C-Node

Source Field

VS.RESERVED20

Source Section

FddCell

RF_ForwrdTrafficChn_Overload

The percentage of time during which the carrier was in power control overload on the forward traffic channel due to power control budget.

Data Source

NodeB

Source Field

VS.RF.ForwrdTrafficChn.Overload

Source Section

Radio Resource PMs

RF_HsAvailPowerRatio_LE10

This measurement provides a distribution of the transmitted power available for HSDPA users as a ratio of the total cell power: HSDPA Available power Distribution >= 0 to <= 10%.

Data Source

NodeB

Source Field

VS.RF.HsAvailPowerRatio.LE10

Source Section

Power and Signal Strength PMs

RF_HsAvailPowerRatio_LE100

This measurement provides a distribution of the transmitted power available for HSDPA users as a ratio of the total cell power: HSDPA Available power Distribution > 90 to <= 100%.

Data Source

NodeB

Source Field

VS.RF.HsAvailPowerRatio.LE100

Source Section

Power and Signal Strength PMs

RF_HsAvailPowerRatio_LE20

This measurement provides a distribution of the transmitted power available for HSDPA users as a ratio of the total cell power: HSDPA Available power Distribution > 10 to <= 20%.

Data Source

NodeB

Source Field

VS.RF.HsAvailPowerRatio.LE20

Source Section

Power and Signal Strength PMs

© Copyright IBM Corp. 1999, 2009. All rights reserved.

RF_HsAvailPowerRatio_LE30

This measurement provides a distribution of the transmitted power available for HSDPA users as a ratio of the total cell power: HSDPA Available power Distribution > 20 to <= 30%.

Data Source

NodeB

Source Field

VS.RF.HsAvailPowerRatio.LE30

Source Section

Power and Signal Strength PMs

RF_HsAvailPowerRatio_LE40

This measurement provides a distribution of the transmitted power available for HSDPA users as a ratio of the total cell power: HSDPA Available power Distribution > 30 to <= 40%.

Data Source

NodeB

Source Field

VS.RF.HsAvailPowerRatio.LE40

Source Section

Power and Signal Strength PMs

RF_HsAvailPowerRatio_LE50

This measurement provides a distribution of the transmitted power available for HSDPA users as a ratio of the total cell power: HSDPA Available power Distribution > 40 to <= 50%.

Data Source

NodeB

Source Field

VS.RF.HsAvailPowerRatio.LE50

Source Section

Power and Signal Strength PMs

RF_HsAvailPowerRatio_LE60

This measurement provides a distribution of the transmitted power available for HSDPA users as a ratio of the total cell power: HSDPA Available power Distribution > 50 to <= 60%.

Data Source

NodeB

Source Field

VS.RF.HsAvailPowerRatio.LE60

Source Section

Power and Signal Strength PMs

RF_HsAvailPowerRatio_LE70

This measurement provides a distribution of the transmitted power available for HSDPA users as a ratio of the total cell power: HSDPA Available power Distribution > 60 to <= 70%.

Data Source

NodeB

Source Field

VS.RF.HsAvailPowerRatio.LE70

Source Section

Power and Signal Strength PMs

RF_HsAvailPowerRatio_LE80

This measurement provides a distribution of the transmitted power available for HSDPA users as a ratio of the total cell power: HSDPA Available power Distribution > 70 to <= 80%.

Data Source

NodeB

Source Field

VS.RF.HsAvailPowerRatio.LE80

Source Section

Power and Signal Strength PMs

© Copyright IBM Corp. 1999, 2009. All rights reserved.

RF_HsAvailPowerRatio_LE90

This measurement provides a distribution of the transmitted power available for HSDPA users as a ratio of the total cell power: HSDPA Available power Distribution > 80 to <= 90%.

Data Source

NodeB

Source Field

VS.RF.HsAvailPowerRatio.LE90

Source Section

Power and Signal Strength PMs

RF_HsCodes_0

This measurement provides a distribution of number of SF16 codes available in the cell for HS-PDSCH. Available HSDPA codes Distribution: HsCode0

Data Source

NodeB

Source Field

VS.RF.HsCodes.0

Source Section

HSDPA resource related Performance Measurements

RF_HsCodes_1

This measurement provides a distribution of number of SF16 codes available in the cell for HS-PDSCH. Available HSDPA codes Distribution: HsCode1

Data Source

NodeB

Source Field

VS.RF.HsCodes.1

Source Section

HSDPA resource related Performance Measurements

RF_HsCodes_10

This measurement provides a distribution of number of SF16 codes available in the cell for HS-PDSCH. Available HSDPA codes Distribution: HsCode10

Data Source

NodeB

Source Field

VS.RF.HsCodes.10

Source Section

HSDPA resource related Performance Measurements

RF_HsCodes_11

This measurement provides a distribution of number of SF16 codes available in the cell for HS-PDSCH. Available HSDPA codes Distribution: HsCode11

Data Source

NodeB

Source Field

VS.RF.HsCodes.11

Source Section

HSDPA resource related Performance Measurements

RF_HsCodes_12

This measurement provides a distribution of number of SF16 codes available in the cell for HS-PDSCH. Available HSDPA codes Distribution: HsCode12

Data Source

NodeB

Source Field

VS.RF.HsCodes.12

Source Section

HSDPA resource related Performance Measurements

© Copyright IBM Corp. 1999, 2009. All rights reserved.

RF_HsCodes_13

This measurement provides a distribution of number of SF16 codes available in the cell for HS-PDSCH. Available HSDPA codes Distribution: HsCode13

Data Source

NodeB

Source Field

VS.RF.HsCodes.13

Source Section

HSDPA resource related Performance Measurements

RF_HsCodes_14

This measurement provides a distribution of number of SF16 codes available in the cell for HS-PDSCH. Available HSDPA codes Distribution: HsCode14

Data Source

NodeB

Source Field

VS.RF.HsCodes.14

Source Section

HSDPA resource related Performance Measurements

RF_HsCodes_15

This measurement provides a distribution of number of SF16 codes available in the cell for HS-PDSCH. Available HSDPA codes Distribution: HsCode15

Data Source

NodeB

Source Field

VS.RF.HsCodes.15

Source Section

HSDPA resource related Performance Measurements

RF_HsCodes_2

This measurement provides a distribution of number of SF16 codes available in the cell for HS-PDSCH. Available HSDPA codes Distribution: HsCode2

Data Source

NodeB

Source Field

VS.RF.HsCodes.2

Source Section

HSDPA resource related Performance Measurements

RF_HsCodes_3

This measurement provides a distribution of number of SF16 codes available in the cell for HS-PDSCH. Available HSDPA codes Distribution: HsCode3

Data Source

NodeB

Source Field

VS.RF.HsCodes.3

Source Section

HSDPA resource related Performance Measurements

RF_HsCodes_4

This measurement provides a distribution of number of SF16 codes available in the cell for HS-PDSCH. Available HSDPA codes Distribution: HsCode4

Data Source

NodeB

Source Field

VS.RF.HsCodes.4

Source Section

HSDPA resource related Performance Measurements

© Copyright IBM Corp. 1999, 2009. All rights reserved.

RF_HsCodes_5

This measurement provides a distribution of number of SF16 codes available in the cell for HS-PDSCH. Available HSDPA codes Distribution: HsCode5

Data Source

NodeB

Source Field

VS.RF.HsCodes.5

Source Section

HSDPA resource related Performance Measurements

RF_HsCodes_6

This measurement provides a distribution of number of SF16 codes available in the cell for HS-PDSCH. Available HSDPA codes Distribution: HsCode6

Data Source

NodeB

Source Field

VS.RF.HsCodes.6

Source Section

HSDPA resource related Performance Measurements

RF_HsCodes_7

This measurement provides a distribution of number of SF16 codes available in the cell for HS-PDSCH. Available HSDPA codes Distribution: HsCode7

Data Source

NodeB

Source Field

VS.RF.HsCodes.7

Source Section

HSDPA resource related Performance Measurements

RF_HsCodes_8

This measurement provides a distribution of number of SF16 codes available in the cell for HS-PDSCH. Available HSDPA codes Distribution: HsCode8

Data Source

NodeB

Source Field

VS.RF.HsCodes.8

Source Section

HSDPA resource related Performance Measurements

RF_HsCodes_9

This measurement provides a distribution of number of SF16 codes available in the cell for HS-PDSCH. Available HSDPA codes Distribution: HsCode9

Data Source

NodeB

Source Field

VS.RF.HsCodes.9

Source Section

HSDPA resource related Performance Measurements

RF_HsGbrCodeRatio_LE10

This measurement provides a distribution of the ratio of number of SF16 codes used to schedule GBR users to the total number of HS-PDSCH codes available. HSDPA codes used for GBR to Available HSDPA codes Distribution: >= 0 to <= 10%.

Data Source

NodeB

Source Field

VS.RF.HsGbrCodeRatio.LE10

Source Section

HSDPA resource related Performance Measurements

© Copyright IBM Corp. 1999, 2009. All rights reserved.

RF_HsGbrCodeRatio_LE100

This measurement provides a distribution of the ratio of number of SF16 codes used to schedule GBR users to the total number of HS-PDSCH codes available. HSDPA codes used for GBR to Available HSDPA codes Distribution: > 90 to <= 100%.

Data Source

NodeB

Source Field

VS.RF.HsGbrCodeRatio.LE100

Source Section

HSDPA resource related Performance Measurements

RF_HsGbrCodeRatio_LE20

This measurement provides a distribution of the ratio of number of SF16 codes used to schedule GBR users to the total number of HS-PDSCH codes available. HSDPA codes used for GBR to Available HSDPA codes Distribution: > 10 to <= 20%.

Data Source

NodeB

Source Field

VS.RF.HsGbrCodeRatio.LE20

Source Section

HSDPA resource related Performance Measurements

RF_HsGbrCodeRatio_LE30

This measurement provides a distribution of the ratio of number of SF16 codes used to schedule GBR users to the total number of HS-PDSCH codes available. HSDPA codes used for GBR to Available HSDPA codes Distribution: > 20 to <= 30%.

Data Source

NodeB

Source Field

VS.RF.HsGbrCodeRatio.LE30

Source Section

HSDPA resource related Performance Measurements

RF_HsGbrCodeRatio_LE40

This measurement provides a distribution of the ratio of number of SF16 codes used to schedule GBR users to the total number of HS-PDSCH codes available. HSDPA codes used for GBR to Available HSDPA codes Distribution: > 30 to <= 40%.

Data Source

NodeB

Source Field

VS.RF.HsGbrCodeRatio.LE40

Source Section

HSDPA resource related Performance Measurements

RF_HsGbrCodeRatio_LE50

This measurement provides a distribution of the ratio of number of SF16 codes used to schedule GBR users to the total number of HS-PDSCH codes available. HSDPA codes used for GBR to Available HSDPA codes Distribution: > 40 to <= 50%.

Data Source

NodeB

Source Field

VS.RF.HsGbrCodeRatio.LE50

Source Section

HSDPA resource related Performance Measurements

RF_HsGbrCodeRatio_LE60

This measurement provides a distribution of the ratio of number of SF16 codes used to schedule GBR users to the total number of HS-PDSCH codes available. HSDPA codes used for GBR to Available HSDPA codes Distribution: > 50 to <= 60%.

Data Source

NodeB

© Copyright IBM Corp. 1999, 2009. All rights reserved.

Source Field

VS.RF.HsGbrCodeRatio.LE60

Source Section

HSDPA resource related Performance Measurements

RF_HsGbrCodeRatio_LE70

This measurement provides a distribution of the ratio of number of SF16 codes used to schedule GBR users to the total number of HS-PDSCH codes available. HSDPA codes used for GBR to Available HSDPA codes Distribution: > 60 to <= 70%.

Data Source

NodeB

Source Field

VS.RF.HsGbrCodeRatio.LE70

Source Section

HSDPA resource related Performance Measurements

RF_HsGbrCodeRatio_LE80

This measurement provides a distribution of the ratio of number of SF16 codes used to schedule GBR users to the total number of HS-PDSCH codes available. HSDPA codes used for GBR to Available HSDPA codes Distribution: > 70 to <= 80%.

Data Source

NodeB

Source Field

VS.RF.HsGbrCodeRatio.LE80

Source Section

HSDPA resource related Performance Measurements

RF_HsGbrCodeRatio_LE90

This measurement provides a distribution of the ratio of number of SF16 codes used to schedule GBR users to the total number of HS-PDSCH codes available. HSDPA codes used for GBR to Available HSDPA codes Distribution: > 80 to <= 90%.

Data Source

NodeB

Source Field

VS.RF.HsGbrCodeRatio.LE90

Source Section

HSDPA resource related Performance Measurements

RF_HsGbrPowerRatio_LE10

This measurement provides a distribution of the transmitted power used for GBR users to the power available for HSDPA. HSDPA power used for GBR to HSDPA available power Distribution: >= 0 to <= 10%.

Data Source

NodeB

Source Field

VS.RF.HsGbrPowerRatio.LE10

Source Section

Power and Signal Strength PMs

RF_HsGbrPowerRatio_LE100

This measurement provides a distribution of the transmitted power used for GBR users to the power available for HSDPA. HSDPA power used for GBR to HSDPA available power Distribution: > 90 to <= 100%.

Data Source

NodeB

Source Field

VS.RF.HsGbrPowerRatio.LE100

Source Section

Power and Signal Strength PMs

© Copyright IBM Corp. 1999, 2009. All rights reserved.

RF_HsGbrPowerRatio_LE20

This measurement provides a distribution of the transmitted power used for GBR users to the power available for HSDPA. HSDPA power used for GBR to HSDPA available power Distribution: > 10 to <= 20%.

Data Source

NodeB

Source Field

VS.RF.HsGbrPowerRatio.LE20

Source Section

Power and Signal Strength PMs

RF_HsGbrPowerRatio_LE30

This measurement provides a distribution of the transmitted power used for GBR users to the power available for HSDPA. HSDPA power used for GBR to HSDPA available power Distribution: > 20 to <= 30%.

Data Source

NodeB

Source Field

VS.RF.HsGbrPowerRatio.LE30

Source Section

Power and Signal Strength PMs

RF_HsGbrPowerRatio_LE40

This measurement provides a distribution of the transmitted power used for GBR users to the power available for HSDPA. HSDPA power used for GBR to HSDPA available power Distribution: > 30 to <= 40%.

Data Source

NodeB

Source Field

VS.RF.HsGbrPowerRatio.LE40

Source Section

Power and Signal Strength PMs

RF_HsGbrPowerRatio_LE50

This measurement provides a distribution of the transmitted power used for GBR users to the power available for HSDPA. HSDPA power used for GBR to HSDPA available power Distribution: > 40 to <= 50%.

Data Source

NodeB

Source Field

VS.RF.HsGbrPowerRatio.LE50

Source Section

Power and Signal Strength PMs

RF_HsGbrPowerRatio_LE60

This measurement provides a distribution of the transmitted power used for GBR users to the power available for HSDPA. HSDPA power used for GBR to HSDPA available power Distribution: > 50 to <= 60%.

Data Source

NodeB

Source Field

VS.RF.HsGbrPowerRatio.LE60

Source Section

Power and Signal Strength PMs

RF_HsGbrPowerRatio_LE70

This measurement provides a distribution of the transmitted power used for GBR users to the power available for HSDPA. HSDPA power used for GBR to HSDPA available power Distribution: > 60 to <= 70%.

Data Source

NodeB

© Copyright IBM Corp. 1999, 2009. All rights reserved.

Source Field

VS.RF.HsGbrPowerRatio.LE70

Source Section

Power and Signal Strength PMs

RF_HsGbrPowerRatio_LE80

This measurement provides a distribution of the transmitted power used for GBR users to the power available for HSDPA. HSDPA power used for GBR to HSDPA available power Distribution: > 70 to <= 80%.

Data Source

NodeB

Source Field

VS.RF.HsGbrPowerRatio.LE80

Source Section

Power and Signal Strength PMs

RF_HsGbrPowerRatio_LE90

This measurement provides a distribution of the transmitted power used for GBR users to the power available for HSDPA. HSDPA power used for GBR to HSDPA available power Distribution: > 80 to <= 90%.

Data Source

NodeB

Source Field

VS.RF.HsGbrPowerRatio.LE90

Source Section

Power and Signal Strength PMs

RF_Rtwp_GT90

Received Total Wideband Power RTWP Distribution provides the number of 100ms samples that the RTWP was > -90dBm

Data Source

NodeB

Source Field

VS.RF.RTWP.GT90

Source Section

Node B measurements

RF_RTWP_LE100

Received Total Wideband Power RTWP Distribution provides the number of 100ms samples that the RTWP was >-101 & <=-100dBm

Data Source

NodeB

Source Field

VS.RF.RTWP.LE100

Source Section

Power and Signal Strength PMs

RF_RTWP_LE101

Received Total Wideband Power RTWP Distribution provides the number of 100ms samples that the RTWP was >-102 & <=-101dBm

Data Source

NodeB

Source Field

VS.RF.RTWP.LE101

Source Section

Power and Signal Strength PMs

RF_RTWP_LE102

Received Total Wideband Power RTWP Distribution provides the number of 100ms samples that the RTWP was >-103 & <=-102dBm

© Copyright IBM Corp. 1999, 2009. All rights reserved.

Data Source

NodeB

Source Field

VS.RF.RTWP.LE102

Source Section

Power and Signal Strength PMs

RF_RTWP_LE103

Received Total Wideband Power RTWP Distribution provides the number of 100ms samples that the RTWP was >-104 & <=-103dBm

Data Source

NodeB

Source Field

VS.RF.RTWP.LE103

Source Section

Power and Signal Strength PMs

RF_RTWP_LE104

Received Total Wideband Power RTWP Distribution provides the number of 100ms samples that the RTWP was >-105 & <=-104dBm

Data Source

NodeB

Source Field

VS.RF.RTWP.LE104

Source Section

Power and Signal Strength PMs

RF_RTWP_LE105

Received Total Wideband Power RTWP Distribution provides the number of 100ms samples that the RTWP was >-106 & <=-105dBm

Data Source

NodeB

Source Field

VS.RF.RTWP.LE105

Source Section

Power and Signal Strength PMs

RF_RTWP_LE106

Received Total Wideband Power RTWP Distribution provides the number of 100ms samples that the RTWP was >-107 & <=-106dBm

Data Source

NodeB

Source Field

VS.RF.RTWP.LE106

Source Section

Power and Signal Strength PMs

RF_RTWP_LE107

Received Total Wideband Power RTWP Distribution provides the number of 100ms samples that the RTWP was >-108 & <=-107dBm

Data Source

NodeB

Source Field

VS.RF.RTWP.LE107

Source Section

Power and Signal Strength PMs

RF_RTWP_LE108

Received Total Wideband Power RTWP Distribution provides the number of 100ms samples that the RTWP was >-109 & <=-108dBm

© Copyright IBM Corp. 1999, 2009. All rights reserved.

Data Source

NodeB

Source Field

VS.RF.RTWP.LE108

Source Section

Power and Signal Strength PMs

RF_RTWP_LE109

Received Total Wideband Power RTWP Distribution provides the number of 100ms samples that the RTWP was >-110 & <=-109dBm

Data Source

NodeB

Source Field

VS.RF.RTWP.LE109

Source Section

Power and Signal Strength PMs

RF_Rtwp_LE110

Received Total Wideband Power RTWP Distribution provides the number of 100ms samples that the RTWP was <= -110dBm

Data Source

NodeB

Source Field

VS.RF.RTWP.LE110

Source Section

Node B measurements

RF_RTWP_LE90

Received Total Wideband Power RTWP Distribution provides the number of 100ms samples that the RTWP was >-91 & <=-90dBm

Data Source

NodeB

Source Field

VS.RF.RTWP.LE90

Source Section

Power and Signal Strength PMs

RF_RTWP_LE91

Received Total Wideband Power RTWP Distribution provides the number of 100ms samples that the RTWP was >-92 & <=-91dBm

Data Source

NodeB

Source Field

VS.RF.RTWP.LE91

Source Section

Power and Signal Strength PMs

RF_RTWP_LE92

Received Total Wideband Power RTWP Distribution provides the number of 100ms samples that the RTWP was >-93 & <=-92dBm

Data Source

NodeB

Source Field

VS.RF.RTWP.LE92

Source Section

Power and Signal Strength PMs

RF_RTWP_LE93

Received Total Wideband Power RTWP Distribution provides the number of 100ms samples that the RTWP was >-94 & <=-93dBm

© Copyright IBM Corp. 1999, 2009. All rights reserved.

Data Source

NodeB

Source Field

VS.RF.RTWP.LE93

Source Section

Power and Signal Strength PMs

RF_RTWP_LE94

Received Total Wideband Power RTWP Distribution provides the number of 100ms samples that the RTWP was >-95 & <=-94dBm

Data Source

NodeB

Source Field

VS.RF.RTWP.LE94

Source Section

Power and Signal Strength PMs

RF_RTWP_LE95

Received Total Wideband Power RTWP Distribution provides the number of 100ms samples that the RTWP was >-96 & <=-95dBm

Data Source

NodeB

Source Field

VS.RF.RTWP.LE95

Source Section

Power and Signal Strength PMs

RF_RTWP_LE96

Received Total Wideband Power RTWP Distribution provides the number of 100ms samples that the RTWP was >-97 & <=-96dBm

Data Source

NodeB

Source Field

VS.RF.RTWP.LE96

Source Section

Power and Signal Strength PMs

RF_RTWP_LE97

Received Total Wideband Power RTWP Distribution provides the number of 100ms samples that the RTWP was >-98 & <=-97dBm

Data Source

NodeB

Source Field

VS.RF.RTWP.LE97

Source Section

Power and Signal Strength PMs

RF_RTWP_LE98

Received Total Wideband Power RTWP Distribution provides the number of 100ms samples that the RTWP was >-99 & <=-98dBm

Data Source

NodeB

Source Field

VS.RF.RTWP.LE98

Source Section

Power and Signal Strength PMs

RF_RTWP_LE99

Received Total Wideband Power RTWP Distribution provides the number of 100ms samples that the RTWP was >-100 & <=-99dBm

© Copyright IBM Corp. 1999, 2009. All rights reserved.

Data Source

NodeB

Source Field

VS.RF.RTWP.LE99

Source Section

Power and Signal Strength PMs

RF_RTWP_Max

Maximum Received Total Wideband Power in dBm

Data Source

NodeB

Source Field

VS.RF.RTWP.Max

Source Section

Power and Signal Strength PMs

RF_RTWP_Mean

Average Received Total Wideband Power in dBm

Data Source

NodeB

Source Field

VS.RF.RTWP.Mean

Source Section

Power and Signal Strength PMs

RF_SIR_LEminus1

Distribution of the Signal to Interference Ratio SIR where -3dB < SIR <= -1dB

Data Source

NodeB

Source Field

VS.RF.SIR.LEminus1

Source Section

Power and Signal Strength PMs

RF_SIR_LEminus11

Distribution of the Signal to Interference Ratio SIR where SIR <= -11dB

Data Source

NodeB

Source Field

VS.RF.SIR.LEminus11

Source Section

Power and Signal Strength PMs

RF_SIR_LEminus3

Distribution of the Signal to Interference Ratio SIR where -5dB < SIR <= -3dB

Data Source

NodeB

Source Field

VS.RF.SIR.LEminus3

Source Section

Power and Signal Strength PMs

RF_SIR_LEminus5

Distribution of the Signal to Interference Ratio SIR where -7dB < SIR <= -5dB

Data Source

NodeB

Source Field

VS.RF.SIR.LEminus5

© Copyright IBM Corp. 1999, 2009. All rights reserved.

Source Section

Power and Signal Strength PMs

RF_SIR_LEminus7

Distribution of the Signal to Interference Ratio SIR where -9dB < SIR <= -7dB

Data Source

NodeB

Source Field

VS.RF.SIR.LEminus7

Source Section

Power and Signal Strength PMs

RF_SIR_LEminus9

Distribution of the Signal to Interference Ratio SIR where -11dB < SIR <= -9dB

Data Source

NodeB

Source Field

VS.RF.SIR.LEminus9

Source Section

Power and Signal Strength PMs

RF_SIR_LEplus1

Distribution of the Signal to Interference Ratio SIR where -1dB < SIR <= 1dB

Data Source

NodeB

Source Field

VS.RF.SIR.LEplus1

Source Section

Power and Signal Strength PMs

RF_SIR_LEplus11

Distribution of the Signal to Interference Ratio SIR where 9dB < SIR <= 11dB

Data Source

NodeB

Source Field

VS.RF.SIR.LEplus11

Source Section

Power and Signal Strength PMs

RF_SIR_LEplus13

Distribution of the Signal to Interference Ratio SIR where 11dB < SIR <= 13dB

Data Source

NodeB

Source Field

VS.RF.SIR.LEplus13

Source Section

Power and Signal Strength PMs

RF_SIR_LEplus15

Distribution of the Signal to Interference Ratio SIR where 13dB < SIR <= 15dB

Data Source

NodeB

Source Field

VS.RF.SIR.LEplus15

Source Section

Power and Signal Strength PMs

RF_SIR_LEplus17

Distribution of the Signal to Interference Ratio SIR where 15dB < SIR <= 17dB

© Copyright IBM Corp. 1999, 2009. All rights reserved.

Data Source

NodeB

Source Field

VS.RF.SIR.LEplus17

Source Section

Power and Signal Strength PMs

RF_SIR_LEplus19

Distribution of the Signal to Interference Ratio SIR where 17dB < SIR <= 19dB

Data Source

NodeB

Source Field

VS.RF.SIR.LEplus19

Source Section

Power and Signal Strength PMs

RF_SIR_LEplus20

Distribution of the Signal to Interference Ratio SIR where 19dB < SIR <= 20dB

Data Source

NodeB

Source Field

VS.RF.SIR.LEplus20

Source Section

Power and Signal Strength PMs

RF_SIR_LEplus3

Distribution of the Signal to Interference Ratio SIR where 1dB < SIR <= 3dB

Data Source

NodeB

Source Field

VS.RF.SIR.LEplus3

Source Section

Power and Signal Strength PMs

RF_SIR_LEplus5

Distribution of the Signal to Interference Ratio SIR where 3dB < SIR <= 5dB

Data Source

NodeB

Source Field

VS.RF.SIR.LEplus5

Source Section

Power and Signal Strength PMs

RF_SIR_LEplus7

Distribution of the Signal to Interference Ratio SIR where 5dB < SIR <= 7dB

Data Source

NodeB

Source Field

VS.RF.SIR.LEplus7

Source Section

Power and Signal Strength PMs

RF_SIR_LEplus9

Distribution of the Signal to Interference Ratio SIR where 7dB < SIR <= 9dB

Data Source

NodeB

Source Field

VS.RF.SIR.LEplus9

© Copyright IBM Corp. 1999, 2009. All rights reserved.

Source Section

Power and Signal Strength PMs

RF_SIR_Max

Maximum Signal to Interference Ratio SIR

Data Source

NodeB

Source Field

VS.RF.SIR.Max

Source Section

Power and Signal Strength PMs

RF_SIR_Mean

Average Signal to Interference Ratio SIR

Data Source

NodeB

Source Field

VS.RF.SIR.Mean

Source Section

Power and Signal Strength PMs

RF_SIRerror_LEminus12

Distribution of the Signal to Interference Ratio SIR Error where -15dB < SIRerror <= -12dB

Data Source

NodeB

Source Field

VS.RF.SIRerror.LEminus12

Source Section

Power and Signal Strength PMs

RF_SIRerror_LEminus15

Distribution of the Signal to Interference Ratio SIR Error where -18dB < SIRerror <= -15dB

Data Source

NodeB

Source Field

VS.RF.SIRerror.LEminus15

Source Section

Power and Signal Strength PMs

RF_SIRerror_LEminus18

Distribution of the Signal to Interference Ratio SIR Error where -21dB < SIRerror <= -18dB

Data Source

NodeB

Source Field

VS.RF.SIRerror.LEminus18

Source Section

Power and Signal Strength PMs

RF_SIRerror_LEminus21

Distribution of the Signal to Interference Ratio SIR Error where -24dB < SIRerror <= -21dB

Data Source

NodeB

Source Field

VS.RF.SIRerror.LEminus21

Source Section

Power and Signal Strength PMs

RF_SIRerror_LEminus24

Distribution of the Signal to Interference Ratio SIR Error where -27dB < SIRerror <= -24dB

© Copyright IBM Corp. 1999, 2009. All rights reserved.

Data Source

NodeB

Source Field

VS.RF.SIRerror.LEminus24

Source Section

Power and Signal Strength PMs

RF_SIRerror_LEminus27

Distribution of the Signal to Interference Ratio SIR Error where -30dB < SIRerror <= -27dB

Data Source

NodeB

Source Field

VS.RF.SIRerror.LEminus27

Source Section

Power and Signal Strength PMs

RF_SIRerror_LEminus3

Distribution of the Signal to Interference Ratio SIR Error where -6dB < SIRerror <= -3dB

Data Source

NodeB

Source Field

VS.RF.SIRerror.LEminus3

Source Section

Power and Signal Strength PMs

RF_SIRerror_LEminus30

Distribution of the Signal to Interference Ratio SIR Error where SIRerror <= -30dB

Data Source

NodeB

Source Field

VS.RF.SIRerror.LEminus30

Source Section

Power and Signal Strength PMs

RF_SIRerror_LEminus6

Distribution of the Signal to Interference Ratio SIR Error where -9dB < SIRerror <= -6dB

Data Source

NodeB

Source Field

VS.RF.SIRerror.LEminus6

Source Section

Power and Signal Strength PMs

RF_SIRerror_LEminus9

Distribution of the Signal to Interference Ratio SIR Error where -12dB < SIRerror <= -9dB

Data Source

NodeB

Source Field

VS.RF.SIRerror.LEminus9

Source Section

Power and Signal Strength PMs

RF_SIRerror_LEplus12

Distribution of the Signal to Interference Ratio SIR Error where 9dB < SIRerror <= 12dB

Data Source

NodeB

Source Field

VS.RF.SIRerror.LEplus12

© Copyright IBM Corp. 1999, 2009. All rights reserved.

Source Section

Power and Signal Strength PMs

RF_SIRerror_LEplus15

Distribution of the Signal to Interference Ratio SIR Error where 12dB < SIRerror <= 15dB

Data Source

NodeB

Source Field

VS.RF.SIRerror.LEplus15

Source Section

Power and Signal Strength PMs

RF_SIRerror_LEplus18

Distribution of the Signal to Interference Ratio SIR Error where 15dB < SIRerror <= 18dB

Data Source

NodeB

Source Field

VS.RF.SIRerror.LEplus18

Source Section

Power and Signal Strength PMs

RF_SIRerror_LEplus21

Distribution of the Signal to Interference Ratio SIR Error where 18dB < SIRerror <= 21dB

Data Source

NodeB

Source Field

VS.RF.SIRerror.LEplus21

Source Section

Power and Signal Strength PMs

RF_SIRerror_LEplus24

Distribution of the Signal to Interference Ratio SIR Error where 21dB < SIRerror <= 24dB

Data Source

NodeB

Source Field

VS.RF.SIRerror.LEplus24

Source Section

Power and Signal Strength PMs

RF_SIRerror_LEplus27

Distribution of the Signal to Interference Ratio SIR Error where 24dB < SIRerror <= 27dB

Data Source

NodeB

Source Field

VS.RF.SIRerror.LEplus27

Source Section

Power and Signal Strength PMs

RF_SIRerror_LEplus3

Distribution of the Signal to Interference Ratio SIR Error where 0dB < SIRerror <= 3dB

Data Source

NodeB

Source Field

VS.RF.SIRerror.LEplus3

Source Section

Power and Signal Strength PMs

RF_SIRerror_LEplus30

Distribution of the Signal to Interference Ratio SIR Error where 27dB < SIRerror <= 30dB

© Copyright IBM Corp. 1999, 2009. All rights reserved.

Data Source

NodeB

Source Field

VS.RF.SIRerror.LEplus30

Source Section

Power and Signal Strength PMs

RF_SIRerror_LEplus31

Distribution of the Signal to Interference Ratio SIR Error where 30dB < SIRerror <= 31dB

Data Source

NodeB

Source Field

VS.RF.SIRerror.LEplus31

Source Section

Power and Signal Strength PMs

RF_SIRerror_LEplus6

Distribution of the Signal to Interference Ratio SIR Error where 3dB < SIRerror <= 6dB

Data Source

NodeB

Source Field

VS.RF.SIRerror.LEplus6

Source Section

Power and Signal Strength PMs

RF_SIRerror_LEplus9

Distribution of the Signal to Interference Ratio SIR Error where 6dB < SIRerror <= 9dB

Data Source

NodeB

Source Field

VS.RF.SIRerror.LEplus9

Source Section

Power and Signal Strength PMs

RF_SIRerror_LEzero

Distribution of the Signal to Interference Ratio SIR Error where -3dB < SIRerror <= 0dB

Data Source

NodeB

Source Field

VS.RF.SIRerror.LEzero

Source Section

Power and Signal Strength PMs

RF_SIRerror_Max

Maximum SIR Error

Data Source

NodeB

Source Field

VS.RF.SIRerror.Max

Source Section

Power and Signal Strength PMs

RF_SIRerror_Mean

Average SIR Error

Data Source

NodeB

Source Field

VS.RF.SIRerror.Mean

© Copyright IBM Corp. 1999, 2009. All rights reserved.

Source Section

Power and Signal Strength PMs

RF_TxCodePwr_LEminus3

Transmitted Code Power Distribution where -6dB< TxCodePwr <= -3dB

Data Source

NodeB

Source Field

VS.RF.TxCodePwr.LEminus3

Source Section

Power and Signal Strength PMs

RF_TxCodePwr_LEminus6

Transmitted Code Power Distribution where -9dB< TxCodePwr <= -6dB

Data Source

NodeB

Source Field

VS.RF.TxCodePwr.LEminus6

Source Section

Power and Signal Strength PMs

RF_TxCodePwr_LEminus9

Transmitted Code Power Distribution where TxCodePwr <= -9dB

Data Source

NodeB

Source Field

VS.RF.TxCodePwr.LEminus9

Source Section

Power and Signal Strength PMs

RF_TxCodePwr_LEplus12

Transmitted Code Power Distribution where 9dB< TxCodePwr <= 12dB

Data Source

NodeB

Source Field

VS.RF.TxCodePwr.LEplus12

Source Section

Power and Signal Strength PMs

RF_TxCodePwr_LEplus15

Transmitted Code Power Distribution where 12dB< TxCodePwr <= 15dB

Data Source

NodeB

Source Field

VS.RF.TxCodePwr.LEplus15

Source Section

Power and Signal Strength PMs

RF_TxCodePwr_LEplus18

Transmitted Code Power Distribution where 15dB< TxCodePwr <= 18dB

Data Source

NodeB

Source Field

VS.RF.TxCodePwr.LEplus18

Source Section

Power and Signal Strength PMs

RF_TxCodePwr_LEplus21

Transmitted Code Power Distribution where 18dB< TxCodePwr <= 21dB

© Copyright IBM Corp. 1999, 2009. All rights reserved.

Data Source

NodeB

Source Field

VS.RF.TxCodePwr.LEplus21

Source Section

Power and Signal Strength PMs

RF_TxCodePwr_LEplus24

Transmitted Code Power Distribution where 21dB< TxCodePwr <= 24dB

Data Source

NodeB

Source Field

VS.RF.TxCodePwr.LEplus24

Source Section

Power and Signal Strength PMs

RF_TxCodePwr_LEplus27

Transmitted Code Power Distribution where 24dB< TxCodePwr <= 27dB

Data Source

NodeB

Source Field

VS.RF.TxCodePwr.LEplus27

Source Section

Power and Signal Strength PMs

RF_TxCodePwr_LEplus3

Transmitted Code Power Distribution where 0dB< TxCodePwr <= 3dB

Data Source

NodeB

Source Field

VS.RF.TxCodePwr.LEplus3

Source Section

Power and Signal Strength PMs

RF_TxCodePwr_LEplus30

Transmitted Code Power Distribution where 27dB< TxCodePwr <= 30dB

Data Source

NodeB

Source Field

VS.RF.TxCodePwr.LEplus30

Source Section

Power and Signal Strength PMs

RF_TxCodePwr_LEplus33

Transmitted Code Power Distribution where 30dB< TxCodePwr <= 33dB

Data Source

NodeB

Source Field

VS.RF.TxCodePwr.LEplus33

Source Section

Power and Signal Strength PMs

RF_TxCodePwr_LEplus36

Transmitted Code Power Distribution where 33dB< TxCodePwr <= 36dB

Data Source

NodeB

Source Field

VS.RF.TxCodePwr.LEplus36

© Copyright IBM Corp. 1999, 2009. All rights reserved.

Source Section

Power and Signal Strength PMs

RF_TxCodePwr_LEplus39

Transmitted Code Power Distribution where 36dB< TxCodePwr <= 39dB

Data Source

NodeB

Source Field

VS.RF.TxCodePwr.LEplus39

Source Section

Power and Signal Strength PMs

RF_TxCodePwr_LEplus42

Transmitted Code Power Distribution where 39dB< TxCodePwr <= 42dB

Data Source

NodeB

Source Field

VS.RF.TxCodePwr.LEplus42

Source Section

Power and Signal Strength PMs

RF_TxCodePwr_LEplus45

Transmitted Code Power Distribution where 42dB< TxCodePwr <= 45dB

Data Source

NodeB

Source Field

VS.RF.TxCodePwr.LEplus45

Source Section

Power and Signal Strength PMs

RF_TxCodePwr_LEplus46

Transmitted Code Power Distribution where 45dB< TxCodePwr <= 46dB

Data Source

NodeB

Source Field

VS.RF.TxCodePwr.LEplus46

Source Section

Power and Signal Strength PMs

RF_TxCodePwr_LEplus6

Transmitted Code Power Distribution where 3dB< TxCodePwr <= 6dB

Data Source

NodeB

Source Field

VS.RF.TxCodePwr.LEplus6

Source Section

Power and Signal Strength PMs

RF_TxCodePwr_LEplus9

Transmitted Code Power Distribution where 6dB< TxCodePwr <= 9dB

Data Source

NodeB

Source Field

VS.RF.TxCodePwr.LEplus9

Source Section

Power and Signal Strength PMs

RF_TxCodePwr_LEzero

Transmitted Code Power Distribution where -3dB< TxCodePwr <= 0dB

© Copyright IBM Corp. 1999, 2009. All rights reserved.

Data Source

NodeB

Source Field

VS.RF.TxCodePwr.LEzero

Source Section

Power and Signal Strength PMs

RF_TxCodePwr_Max

Maximum Transmitted Code Power

Data Source

NodeB

Source Field

VS.RF.TxCodePwr.Max

Source Section

Power and Signal Strength PMs

RF_TxCodePwr_Mean

Average Transmitted Code Power

Data Source

NodeB

Source Field

VS.RF.TxCodePwr.Mean

Source Section

Power and Signal Strength PMs

RF_TxPwr_AllCodes_LE10

Transmitted Carrier Power Distribution provides the number of 100ms samples that the percentage of Tx power was >0% & <=10%

Data Source

NodeB

Source Field

VS.RF.TxPwr.AllCodes.LE10

Source Section

Power and Signal Strength PMs

RF_TxPwr_AllCodes_LE100

Transmitted Carrier Power Distribution provides the number of 100ms samples that the percentage of Tx power was >90% & <=100%

Data Source

NodeB

Source Field

VS.RF.TxPwr.AllCodes.LE100

Source Section

Power and Signal Strength PMs

RF_TxPwr_AllCodes_LE20

Transmitted Carrier Power Distribution provides the number of 100ms samples that the percentage of Tx power was >10% & <=20%

Data Source

NodeB

Source Field

VS.RF.TxPwr.AllCodes.LE20

Source Section

Power and Signal Strength PMs

RF_TxPwr_AllCodes_LE30

Transmitted Carrier Power Distribution provides the number of 100ms samples that the percentage of Tx power was >20% & <=30%

© Copyright IBM Corp. 1999, 2009. All rights reserved.

Data Source

NodeB

Source Field

VS.RF.TxPwr.AllCodes.LE30

Source Section

Power and Signal Strength PMs

RF_TxPwr_AllCodes_LE40

Transmitted Carrier Power Distribution provides the number of 100ms samples that the percentage of Tx power was >30% & <=40%

Data Source

NodeB

Source Field

VS.RF.TxPwr.AllCodes.LE40

Source Section

Power and Signal Strength PMs

RF_TxPwr_AllCodes_LE50

Transmitted Carrier Power Distribution provides the number of 100ms samples that the percentage of Tx power was >40% & <=50%

Data Source

NodeB

Source Field

VS.RF.TxPwr.AllCodes.LE50

Source Section

Power and Signal Strength PMs

RF_TxPwr_AllCodes_LE60

Transmitted Carrier Power Distribution provides the number of 100ms samples that the percentage of Tx power was >50% & <=60%

Data Source

NodeB

Source Field

VS.RF.TxPwr.AllCodes.LE60

Source Section

Power and Signal Strength PMs

RF_TxPwr_AllCodes_LE70

Transmitted Carrier Power Distribution provides the number of 100ms samples that the percentage of Tx power was >60% & <=70%

Data Source

NodeB

Source Field

VS.RF.TxPwr.AllCodes.LE70

Source Section

Power and Signal Strength PMs

RF_TxPwr_AllCodes_LE80

Transmitted Carrier Power Distribution provides the number of 100ms samples that the percentage of Tx power was >70% & <=80%

Data Source

NodeB

Source Field

VS.RF.TxPwr.AllCodes.LE80

Source Section

Power and Signal Strength PMs

RF_TxPwr_AllCodes_LE90

Transmitted Carrier Power Distribution provides the number of 100ms samples that the percentage of Tx power was >80% & <=90%

© Copyright IBM Corp. 1999, 2009. All rights reserved.

Data Source

NodeB

Source Field

VS.RF.TxPwr.AllCodes.LE90

Source Section

Power and Signal Strength PMs

RF_TxPwr_AllCodes_Max

Maximum Transmitted Carrier Power as a percentage from 5 seconds samples

Data Source

NodeB

Source Field

VS.RF.TxPwr.AllCodes.Max

Source Section

Power and Signal Strength PMs

RF_TxPwr_AllCodes_Mean

Average Transmitted Carrier Power as a percentage from 5 seconds samples

Data Source

NodeB

Source Field

VS.RF.TxPwr.AllCodes.Mean

Source Section

Power and Signal Strength PMs

RF_TxPwr_CodesNotHSDPA_Max

Maximum Transmitted Carrier Power of all Codes not used for HSDPA

Data Source

NodeB

Source Field

VS.RF.TxPwr.CodesNotHSDPA.Max

Source Section

Node B Measurements - Bitrate and Carrier Power

RF_TxPwr_HsPdschCodes_Max

Maximum HS-PDSCH Transmitted Power

Data Source

NodeB

Source Field

VS.RF.TxPwr.HsPdschCodes.Max

Source Section

Power and Signal Strength PMs

RF_TxPwr_HsPdschCodes_Mean

Average HS-PDSCH Transmitted Power

Data Source

NodeB

Source Field

VS.RF.TxPwr.HsPdschCodes.Mean

Source Section

Power and Signal Strength PMs

RF_TxPwr_HsScchCodes_Max

Maximum HS-SCCH Transmitted Power

Data Source

NodeB

Source Field

VS.RF.TxPwr.HsScchCodes.Max

© Copyright IBM Corp. 1999, 2009. All rights reserved.

Source Section

Power and Signal Strength PMs

RF_TxPwr_HsScchCodes_Mean

Average HS-SCCH Transmitted Power

Data Source

NodeB

Source Field

VS.RF.TxPwr.HsScchCodes.Mean

Source Section

Power and Signal Strength PMs

RlcUnrecoverableErrorDlRabCsData64

Number of RLC unrecoverable errors detected by the PMC RAB. This counter is not applicable to CS Radio Bearers (only applicable to AM RBs). (DlRabCsData64)

Data Source

RNC C-Node

Source Field

VS.RlcUnrecoverableError.DlRabCsData64

Source Section

FddCell

RlcUnrecoverableErrorDlRabCsSpeech

Number of RLC unrecoverable errors detected by the PMC RAB. This counter is not applicable to CS Radio Bearers (only applicable to AM RBs). (DlRabCsSpeech)

Data Source

RNC C-Node

Source Field

VS.RlcUnrecoverableError.DlRabCsSpeech

Source Section

FddCell

RlcUnrecoverableErrorDlRabCsStr

Number of RLC unrecoverable errors detected by the PMC RAB. This counter is not applicable to CS Radio Bearers (only applicable to AM RBs). (DlRabCsStr)

Data Source

RNC C-Node

Source Field

VS.RlcUnrecoverableError.DlRabCsStr

Source Section

FddCell

RlcUnrecoverableErrorDlRabHsdpa

Number of RLC unrecoverable errors detected by the PMC RAB. This counter is not applicable to CS Radio Bearers (only applicable to AM RBs). (DlRabHsdpa)

Data Source

RNC C-Node

Source Field

VS.RlcUnrecoverableError.DlRabHsdpa

Source Section

FddCell

RlcUnrecoverableErrorDlRabOther

Number of RLC unrecoverable errors detected by the PMC RAB. This counter is not applicable to CS Radio Bearers (only applicable to AM RBs). (DlRabOther)

Data Source

RNC C-Node

Source Field

VS.RlcUnrecoverableError.DlRabOther

© Copyright IBM Corp. 1999, 2009. All rights reserved.

Source Section

FddCell

RlcUnrecoverableErrorDlRabPsIb128

Number of RLC unrecoverable errors detected by the PMC RAB. This counter is not applicable to CS Radio Bearers (only applicable to AM RBs). (DlRabPsIb128)

Data Source

RNC C-Node

Source Field

VS.RlcUnrecoverableError.DlRabPsIb128

Source Section

FddCell

RlcUnrecoverableErrorDlRabPsIb16

Number of RLC unrecoverable errors detected by the PMC RAB. This counter is not applicable to CS Radio Bearers (only applicable to AM RBs). (DlRabPsIb16)

Data Source

RNC C-Node

Source Field

VS.RlcUnrecoverableError.DlRabPsIb16

Source Section

FddCell

RlcUnrecoverableErrorDlRabPsIb256

Number of RLC unrecoverable errors detected by the PMC RAB. This counter is not applicable to CS Radio Bearers (only applicable to AM RBs). (DlRabPsIb256)

Data Source

RNC C-Node

Source Field

VS.RlcUnrecoverableError.DlRabPsIb256

Source Section

FddCell

RlcUnrecoverableErrorDlRabPsIb32

Number of RLC unrecoverable errors detected by the PMC RAB. This counter is not applicable to CS Radio Bearers (only applicable to AM RBs). (DlRabPsIb32)

Data Source

RNC C-Node

Source Field

VS.RlcUnrecoverableError.DlRabPsIb32

Source Section

FddCell

RlcUnrecoverableErrorDlRabPsIb384

Number of RLC unrecoverable errors detected by the PMC RAB. This counter is not applicable to CS Radio Bearers (only applicable to AM RBs). (DlRabPsIb384)

Data Source

RNC C-Node

Source Field

VS.RlcUnrecoverableError.DlRabPsIb384

Source Section

FddCell

RlcUnrecoverableErrorDlRabPsIb64

Number of RLC unrecoverable errors detected by the PMC RAB. This counter is not applicable to CS Radio Bearers (only applicable to AM RBs). (DlRabPsIb64)

Data Source

RNC C-Node

Source Field

VS.RlcUnrecoverableError.DlRabPsIb64

© Copyright IBM Corp. 1999, 2009. All rights reserved.

Source Section

FddCell

RlcUnrecoverableErrorDlRabPsIb8

Number of RLC unrecoverable errors detected by the PMC RAB. This counter is not applicable to CS Radio Bearers (only applicable to AM RBs). (DlRabPsIb8)

Data Source

RNC C-Node

Source Field

VS.RlcUnrecoverableError.DlRabPsIb8

Source Section

FddCell

RlcUnrecoverableErrorDlRabPsStr128

Number of RLC unrecoverable errors detected by the PMC RAB. This counter is not applicable to CS Radio Bearers (only applicable to AM RBs). (DlRabPsStr128)

Data Source

RNC C-Node

Source Field

VS.RlcUnrecoverableError.DlRabPsStr128

Source Section

FddCell

RlcUnrecoverableErrorDlRabPsStr256

Number of RLC unrecoverable errors detected by the PMC RAB. This counter is not applicable to CS Radio Bearers (only applicable to AM RBs). (DlRabPsStr256)

Data Source

RNC C-Node

Source Field

VS.RlcUnrecoverableError.DlRabPsStr256

Source Section

FddCell

RlcUnrecoverableErrorDlRabPsStr384

Number of RLC unrecoverable errors detected by the PMC RAB. This counter is not applicable to CS Radio Bearers (only applicable to AM RBs). (DlRabPsStr384)

Data Source

RNC C-Node

Source Field

VS.RlcUnrecoverableError.DlRabPsStr384

Source Section

FddCell

RlcUnrecoverableErrorDlRabPsStrOther

Number of RLC unrecoverable errors detected by the PMC RAB. This counter is not applicable to CS Radio Bearers (only applicable to AM RBs). (DlRabPsStrOther)

Data Source

RNC C-Node

Source Field

VS.RlcUnrecoverableError.DlRabPsStrOther

Source Section

FddCell

RlcUnrecoverableErrorDlRabSRB

Number of RLC unrecoverable errors detected by the PMC RAB. This counter is not applicable to CS Radio Bearers (only applicable to AM RBs). (DlRabSRB)

Data Source

RNC C-Node

Source Field

VS.RlcUnrecoverableError.DlRabSRB

© Copyright IBM Corp. 1999, 2009. All rights reserved.

Source Section

FddCell

RlFailNotSync

Succeeded by:RLM_DropRL_ULRLFNoLossSync. Number of dropped radio links caused by radio link failures not due to loss of synchronisation

Data Source

RNC

Source Field

RlFailNotSync

Source Section

Radio Link Failure

RlFailSync

Succeeded by:RLM_DropRL_ULRLFLossSync. Number of dropped radio links caused by radio link failures due to loss of synchronisation

Data Source

RNC

Source Field

RlFailSync

Source Section

Radio Link Failure

RLM_AttRLAddIub

Attempted Radio Link Additions on Iub (UTRAN side)

Data Source

RNC

Source Field

RLM.AttRLAddIub

Source Section

Radio Link Addition: Attempts, Successes and Failures (UTRAN side)

RLM_AttRLAddIub_CSD

Attempted Radio Link Additions on Iub for CS Data

Data Source

RNC

Source Field

RLM.AttRLAddIub.CSD

Source Section

Radio Link Addition: Attempts, Successes and Failures (UTRAN side)

RLM_AttRLAddIub_CSV

Attempted Radio Link Additions on Iub for CS Voice

Data Source

RNC

Source Field

RLM.AttRLAddIub.CSV

Source Section

Radio Link Addition: Attempts, Successes and Failures (UTRAN side)

RLM_AttRLAddIub_PSD

Attempted Radio Link Additions on Iub for PS Data

Data Source

RNC

Source Field

RLM.AttRLAddIub.PSD

Source Section

Radio Link Addition: Attempts, Successes and Failures (UTRAN side)

© Copyright IBM Corp. 1999, 2009. All rights reserved.

RLM_AttRLReconfig

Number of RL Reconfiguration Attempts

Data Source

RNC

Source Field

VS.RLM.AttRLReconfig

Source Section

Radio Link Reconfiguration

RLM_AttRLSetupIub

Attempted Radio Link Setups on Iub (UTRAN side)

Data Source

RNC

Source Field

RLM.AttRLSetupIub

Source Section

Radio Link Set-up: Attempts, Successes and Failures (UTRAN side)

RLM_AttRLSetupIub_CSD

Attempted Radio Link Setups on Iub for CS Data

Data Source

RNC

Source Field

RLM.AttRLSetupIub.CSD

Source Section

Radio Link Set-up: Attempts, Successes and Failures (UTRAN side)

RLM_AttRLSetupIub_CSV

Attempted Radio Link Setups on Iub for CSV

Data Source

RNC

Source Field

RLM.AttRLSetupIub.CSV

Source Section

Radio Link Set-up: Attempts, Successes and Failures (UTRAN side)

RLM_AttRLSetupIub_PSD

Attempted Radio Link Setups on Iub for PS Data

Data Source

RNC

Source Field

RLM.AttRLSetupIub.PSD

Source Section

Radio Link Set-up: Attempts, Successes and Failures (UTRAN side)

RLM_DropRL_ULRLFLossSync

Number of Dropped Radio Links caused by Uplink Radio Link Failure - Loss of synchronisation

Data Source

RNC

Source Field

VS.RLM.DropRL.ULRLFLossSync

Source Section

Radio Link Failure

RLM_DropRL_ULRLFNoLossSync

Number of Dropped Radio Links caused by Uplink Radio Link Failure - other than Loss of synchronisation

© Copyright IBM Corp. 1999, 2009. All rights reserved.

Data Source

RNC

Source Field

VS.RLM.DropRL.ULRLFNoLossSync

Source Section

Radio Link Failure

RLM_FailRLAddIub_NodeBRes_CSD

Number of Failed Radio Link Addition Attempts on Iub due to missing NodeB resources for CS Data

Data Source

RNC

Source Field

RLM.FailRLAddIub.NodeBRes.CSD

Source Section

Radio Link Addition: Attempts, Successes and Failures (UTRAN side)

RLM_FailRLAddIub_NodeBRes_CSV

Number of Failed Radio Link Addition Attempts on Iub due to missing NodeB resources for CS Voice

Data Source

RNC

Source Field

RLM.FailRLAddIub.NodeBRes.CSV

Source Section

Radio Link Addition: Attempts, Successes and Failures (UTRAN side)

RLM_FailRLAddIub_NodeBRes_PSD

Number of Failed Radio Link Addition Attempts on Iub due to missing NodeB resources for PS Data

Data Source

RNC

Source Field

RLM.FailRLAddIub.NodeBRes.PSD

Source Section

Radio Link Addition: Attempts, Successes and Failures (UTRAN side)

RLM_FailRLAddIub_TransRes

Failed Radio Link Addition Attempts on Iub (UTRAN side) due to Transmission Resources

Data Source

RNC

Source Field

RLM.FailRLAddIub.TransRes

Source Section

Radio Link Addition: Attempts, Successes and Failures (UTRAN side)

RLM_FailRLReconfig_NodeBRes

Number of Failed Radio Link Reconfiguration Requests due to Failure at the Radio Level

Data Source

RNC

Source Field

VS.RLM.FailRLReconfig.NodeBRes

Source Section

Radio Link Reconfiguration

RLM_FailRLReconfig_sum

Number of Failed Radio Link Reconfiguration Requests

Data Source

RNC

© Copyright IBM Corp. 1999, 2009. All rights reserved.

Source Field

VS.RLM.FailRLReconfig.sum

Source Section

Radio Link Reconfiguration

RLM_FailRLReconfig_Timeout

Number of Failed Radio Link Reconfiguration Requests due to Timeout

Data Source

RNC

Source Field

VS.RLM.FailRLReconfig.Timeout

Source Section

Radio Link Reconfiguration

RLM_FailRLReconfig_TransRes

Number of Failed Radio Link Reconfiguration Requests due to Failure at the Transport Network Level

Data Source

RNC

Source Field

VS.RLM.FailRLReconfig.TransRes

Source Section

Radio Link Reconfiguration

RLM_FailRLSetupIub_NodeBRes_CSD

Failed Radio Link Setup Attempts on Iub due to missing NodeB resources for CS Data

Data Source

RNC

Source Field

RLM.FailRLSetupIub.NodeBRes.CSD

Source Section

Radio Link Set-up: Attempts, Successes and Failures (UTRAN side)

RLM_FailRLSetupIub_NodeBRes_CSV

Failed Radio Link Setup Attempts on Iub due to missing NodeB resources for CS Voice

Data Source

RNC

Source Field

RLM.FailRLSetupIub.NodeBRes.CSV

Source Section

Radio Link Set-up: Attempts, Successes and Failures (UTRAN side)

RLM_FailRLSetupIub_NodeBRes_PSD

Failed Radio Link Setup Attempts on Iub due to missing NodeB resources for PS Data

Data Source

RNC

Source Field

RLM.FailRLSetupIub.NodeBRes.PSD

Source Section

Radio Link Set-up: Attempts, Successes and Failures (UTRAN side)

RLM_FailRLSetupIub_TransRes_CSD

Failed Radio Link Setup Attempts on Iub due to missing transport network resources for CS Data

Data Source

RNC

© Copyright IBM Corp. 1999, 2009. All rights reserved.

Source Field

RLM.FailRLSetupIub.TransRes.CSD

Source Section

Radio Link Set-up: Attempts, Successes and Failures (UTRAN side)

RLM_FailRLSetupIub_TransRes_CSV

Failed Radio Link Setup Attempts on Iub due to missing transport network resources for CS Voice

Data Source

RNC

Source Field

RLM.FailRLSetupIub.TransRes.CSV

Source Section

Radio Link Set-up: Attempts, Successes and Failures (UTRAN side)

RLM_FailRLSetupIub_TransRes_PSD

Failed Radio Link Setup Attempts on Iub due to missing transport network resources for PS Data

Data Source

RNC

Source Field

RLM.FailRLSetupIub.TransRes.PSD

Source Section

Radio Link Set-up: Attempts, Successes and Failures (UTRAN side)

RLM_MaxActiveRL

Maximum number of Active Radio Links

Data Source

RNC

Source Field

VS.RLM.MaxActiveRL

Source Section

Radio Link - Average / Maximum

RLM_MeanActiveRL

Average number of Active Radio Links

Data Source

RNC

Source Field

VS.RLM.MeanActiveRL

Source Section

Radio Link - Average / Maximum

RLM_SuccRLAddIub

Number of Successful Radio Link Addition Attempts on Iub

Data Source

RNC

Source Field

RLM.SuccRLAddIub

Source Section

Radio Link Addition: Attempts, Successes and Failures (UTRAN side)

RLM_SuccRLSetupIub

Number of Successful Radio Link Setup Attempts on Iub

Data Source

RNC

Source Field

RLM.SuccRLSetupIub

© Copyright IBM Corp. 1999, 2009. All rights reserved.

Source Section

Radio Link Set-up: Attempts, Successes and Failures (UTRAN side)

RLMFailRLAddIubCSResource

Failed Radio Link Additions for CS calls. (Resource)

Data Source

RNC C-Node

Source Field

RLM.FailRLAddIub.CS.Resource

Source Section

FddCell

RLMFailRLAddIubPSResource

Failed Radio Link Additions for PS calls (Resource)

Data Source

RNC C-Node

Source Field

RLM.FailRLAddIub.PS.Resource

Source Section

FddCell

RLMFailRLSetupIubCSResource

Failed Radio Link Setups for CS calls (Resource)

Data Source

RNC C-Node

Source Field

RLM.FailRLSetupIub.CS.Resource

Source Section

FddCell

RLMFailRLSetupIubPSResource

Failed Radio Link Setups for PS calls. (Resource)

Data Source

RNC C-Node

Source Field

RLM.FailRLSetupIub.PS.Resource

Source Section

FddCell

RLSetAct_Size1

Number of active link sets with 1 RL in active set (gauge)

Data Source

RNC

Source Field

VS.RLSetAct.Size1

Source Section

Active Set Size Distribution of Radio Links

RLSetAct_Size2

Number of active link sets with 2 RL in active set (gauge)

Data Source

RNC

Source Field

VS.RLSetAct.Size2

Source Section

Active Set Size Distribution of Radio Links

RLSetAct_Size3

Number of active link sets with 3 RL in active set (gauge)

© Copyright IBM Corp. 1999, 2009. All rights reserved.

Data Source

RNC

Source Field

VS.RLSetAct.Size3

Source Section

Active Set Size Distribution of Radio Links

RLSetAct_Size4

Number of active link sets with 4 RL in active set (gauge)

Data Source

RNC

Source Field

VS.RLSetAct.Size4

Source Section

Active Set Size Distribution of Radio Links

RLSetAct_Size5

Number of active link sets with 5 RL in active set (gauge)

Data Source

RNC

Source Field

VS.RLSetAct.Size5

Source Section

Active Set Size Distribution of Radio Links

RLSetAct_Size6

Number of active link sets with 6 RL in active set (gauge)

Data Source

RNC

Source Field

VS.RLSetAct.Size6

Source Section

Active Set Size Distribution of Radio Links

RlSleepyCellInactivity

Number of minutes since RL activity was detected for this cell. (RlSleepyCellInactivity)

Data Source

RNC C-Node

Source Field

VS.RlSleepyCellInactivity

Source Section

FddCell

RncInitAmrNbDlRateCtrlDlPowerLoad

Number of time an AMR-NB DL rate has changed due to UTRAN specific criteria (DL Tx power consumption or Iub DS transport load) (DlPowerLoad)

Data Source

RNC C-Node

Source Field

VS.RncInitAmrNbDlRateCtrl.DlPowerLoad

Source Section

FddCell

RncInitAmrNbDlRateCtrlDlTxCodePower

Number of time an AMR-NB DL rate has changed due to UTRAN specific criteria (DL Tx power consumption or Iub DS transport load) (DlTxCodePower)

Data Source

RNC C-Node

© Copyright IBM Corp. 1999, 2009. All rights reserved.

Source Field

VS.RncInitAmrNbDlRateCtrl.DlTxCodePower

Source Section

FddCell

RncInitAmrNbDlRateCtrlIubDsLoad

Number of time an AMR-NB DL rate has changed due to UTRAN specific criteria (DL Tx power consumption or Iub DS transport load) (IubDsLoad)

Data Source

RNC C-Node

Source Field

VS.RncInitAmrNbDlRateCtrl.IubDsLoad

Source Section

FddCell

RncInitAmrNbUlRateCtrlIubDsLoad

Number of time an AMR-NB UL rate has changed due to UTRAN specific criteria (i.e. UL Cell load color change or Iub DS transport load state change) (IubDsLoad)

Data Source

RNC C-Node

Source Field

VS.RncInitAmrNbUlRateCtrl.IubDsLoad

Source Section

FddCell

RncInitAmrNbUlRateCtrlUlCellLoad

Number of time an AMR-NB UL rate has changed due to UTRAN specific criteria (i.e. UL Cell load color change or Iub DS transport load state change) (UlCellLoad)

Data Source

RNC C-Node

Source Field

VS.RncInitAmrNbUlRateCtrl.UlCellLoad

Source Section

FddCell

RNCInitRabModifReqAnyAmrToCSData

Number of RAB modifications request to Core Network to switch between the Video Telephony service to Speech service, or vice versa. (AnyAmrToCSData)

Data Source

RNC C-Node

Source Field

VS.RNCInitRabModifReq.AnyAmrToCSData

Source Section

FddCell

RNCInitRabModifReqCSDataToAnyAmr

Number of RAB modifications request to Core Network to switch between the Video Telephony service to Speech service, or vice versa. (CSDataToAnyAmr)

Data Source

RNC C-Node

Source Field

VS.RNCInitRabModifReq.CSDataToAnyAmr

Source Section

FddCell

RRC_AttConnEstab_CallReEstab

Number of Attempted RRC Connections Establishments for Call Re-establishment

Data Source

RNC

© Copyright IBM Corp. 1999, 2009. All rights reserved.

Source Field

RRC.AttConnEstab.CallReEstab

Source Section

Radio Resource Management - RRC Connection Related Counter

RRC_AttConnEstab_CallReEstab_ExcRep

The counter shall be incremented on receipt of RRC CONNECTION REQUEST messages with establishment cause-Call re-establishment,at the RNC from the UE. Repeated attempts from the same UE on the same or a different cell - due to cell reselection - are excluded. The counters are pegged on the cell the RRC connection establishment succeeds or finally fails.

Data Source

RNC

Source Field

VS.RRC.AttConnEstab.CallReEstab.ExcRep

Source Section

RRC Connection Establishment

RRC_AttConnEstab_CellReselect

Number of Attempted RRC Connections Establishments for Cell Reselection

Data Source

RNC

Source Field

RRC.AttConnEstab.CellReselect

Source Section

Radio Resource Management - RRC Connection Related Counter

RRC_AttConnEstab_CellReselect_ExcRep

The counter shall be incremented on receipt of RRC CONNECTION REQUEST messages with establishment cause-Inter-RAT cell re-selection,at the RNC from the UE. Repeated attempts from the same UE on the same or a different cell - due to cell reselection - are excluded. The counters are pegged on the cell the RRC connection establishment succeeds or finally fails.

Data Source

RNC

Source Field

VS.RRC.AttConnEstab.CellReselect.ExcRep

Source Section

RRC Connection Establishment

RRC_AttConnEstab_Detach

Number of Attempted RRC Connections Establishments for Detach

Data Source

RNC

Source Field

RRC.AttConnEstab.Detach

Source Section

Radio Resource Management - RRC Connection Related Counter

RRC_AttConnEstab_Detach_ExcRep

The counter shall be incremented on receipt of RRC CONNECTION REQUEST messages with establishment cause-Detach,at the RNC from the UE. Repeated attempts from the same UE on the same or a different cell - due to cell reselection - are excluded. The counters are pegged on the cell the RRC connection establishment succeeds or finally fails.

Data Source

RNC

Source Field

VS.RRC.AttConnEstab.Detach.ExcRep

Source Section

RRC Connection Establishment

RRC_AttConnEstab_Emergency

Number of Attempted RRC Connections Establishments for Emergency

© Copyright IBM Corp. 1999, 2009. All rights reserved.

Data Source

RNC

Source Field

RRC.AttConnEstab.Emergency

Source Section

Radio Resource Management - RRC Connection Related Counter

RRC_AttConnEstab_Emergency_ExcRep

The counter shall be incremented on receipt of RRC CONNECTION REQUEST messages with establishment cause-Emergency Call,at the RNC from the UE. Repeated attempts from the same UE on the same or a different cell - due to cell reselection - are excluded. The counters are pegged on the cell the RRC connection establishment succeeds or finally fails.

Data Source

RNC

Source Field

VS.RRC.AttConnEstab.Emergency.ExcRep

Source Section

RRC Connection Establishment

RRC_AttConnEstab_IratCCO

Number of Attempted RRC Connection Establishments for Inter RAT Cell Change Order

Data Source

RNC

Source Field

RRC.AttConnEstab.IratCCO

Source Section

RRC Connection Establishment

RRC_AttConnEstab_IratCCO_ExcRep

The counter shall be incremented on receipt of RRC CONNECTION REQUEST messages with establishment cause-Inter-RAT cell change order,at the RNC from the UE. Repeated

attempts from the same UE on the same or a different cell - due to cell reselection - are excluded. The counters are pegged on the cell the RRC connection establishment succeeds or finally fails.

Data Source

RNC

Source Field

VS.RRC.AttConnEstab.IratCCO.ExcRep

Source Section

RRC Connection Establishment

RRC_AttConnEstab_OrigBgrdCall

The counter shall be incremented on receipt of RRC CONNECTION REQUEST messages with establishment cause-Originating Background Call, at the RNC from the UE.

Data Source

RNC

Source Field

RRC.AttConnEstab.OrigBgrdCall

Source Section

RRC Connection Establishment

RRC_AttConnEstab_OrigBgrdCall_ExcRep

The counter shall be incremented on receipt of RRC CONNECTION REQUEST messages with establishment cause-Originating Background Call,at the RNC from the UE. Repeated attempts from the same UE on the same or a different cell - due to cell reselection - are excluded. The counters are pegged on the cell the RRC connection establishment succeeds or finally fails.

Data Source

RNC

Source Field

VS.RRC.AttConnEstab.OrigBgrdCall.ExcRep

© Copyright IBM Corp. 1999, 2009. All rights reserved.

Source Section

RRC Connection Establishment

RRC_AttConnEstab_OrigCallData

Retired fr 3.0.6.0.0 - Number of Attempted RRC Connections Establishments for Originating Data Calls

Data Source

RNC

Source Field

RRC.AttConnEstab.OrigCallData

Source Section

Radio Resource Management - RRC Connection Related Counter

RRC_AttConnEstab_OrigConvCall

Number of Attempted RRC Connections Establishments for Originating Voice Calls

Data Source

RNC

Source Field

RRC.AttConnEstab.OrigConvCall

Source Section

RRC Connection Establishment

RRC_AttConnEstab_OrigConvCall_ExcRep

The counter shall be incremented on receipt of RRC CONNECTION REQUEST messages with establishment cause-Originating Conversational Call,at the RNC from the UE. Repeated attempts from the same UE on the same or a different cell - due to cell reselection - are excluded. The counters are pegged on the cell the RRC connection establishment succeeds or finally fails.

Data Source

RNC

Source Field

VS.RRC.AttConnEstab.OrigConvCall.ExcRep

Source Section

RRC Connection Establishment

RRC_AttConnEstab_OrigHighPrioSig

The counter shall be incremented on receipt of RRC CONNECTION REQUEST messages with establishment cause-Originating High Priority Signalling, at the RNC from the UE.

Data Source

RNC

Source Field

RRC.AttConnEstab.OrigHighPrioSig

Source Section

RRC Connection Establishment

RRC_AttConnEstab_OrigHighPrioSig_ExcRep

The counter shall be incremented on receipt of RRC CONNECTION REQUEST messages with establishment cause-Originating High Priority Signalling,at the RNC from the UE. Repeated attempts from the same UE on the same or a different cell - due to cell reselection - are excluded. The counters are pegged on the cell the RRC connection establishment succeeds or finally fails.

Data Source

RNC

Source Field

VS.RRC.AttConnEstab.OrigHighPrioSig.ExcRep

Source Section

RRC Connection Establishment

RRC_AttConnEstab_OrigIntactCall

The counter shall be incremented on receipt of RRC CONNECTION REQUEST messages with establishment cause-Originating Interactive Call, at the RNC from the UE.

© Copyright IBM Corp. 1999, 2009. All rights reserved.

Data Source

RNC

Source Field

RRC.AttConnEstab.OrigIntactCall

Source Section

RRC Connection Establishment

RRC_AttConnEstab_OrigIntactCall_ExcRep

The counter shall be incremented on receipt of RRC CONNECTION REQUEST messages with establishment cause-Originating Interactive Call,at the RNC from the UE. Repeated attempts from the same UE on the same or a different cell - due to cell reselection - are excluded. The counters are pegged on the cell the RRC connection establishment succeeds or finally fails.

Data Source

RNC

Source Field

VS.RRC.AttConnEstab.OrigIntactCall.ExcRep

Source Section

RRC Connection Establishment

RRC_AttConnEstab_OrigLowPrioSig

Number of Attempted RRC Connections Establishments for Originations with Low Priority Signalling where Low Priority Signalling includes SMS

Data Source

RNC

Source Field

RRC.AttConnEstab.OrigLowPrioSig

Source Section

Radio Resource Management - RRC Connection Related Counter

RRC_AttConnEstab_OrigLowPrioSig_ExcRep

The counter shall be incremented on receipt of RRC CONNECTION REQUEST messages with establishment cause-Originating Low Priority Signalling,at the RNC from the UE. Repeated attempts from the same UE on the same or a different cell - due to cell reselection - are excluded. The counters are pegged on the cell the RRC connection establishment succeeds or finally fails.

Data Source

RNC

Source Field

VS.RRC.AttConnEstab.OrigLowPrioSig.ExcRep

Source Section

RRC Connection Establishment

RRC_AttConnEstab_OrigStrmCall

The counter shall be incremented on receipt of RRC CONNECTION REQUEST messages with establishment cause-Originating Streaming Call, at the RNC from the UE.

Data Source

RNC

Source Field

RRC.AttConnEstab.OrigStrmCall

Source Section

RRC Connection Establishment

RRC_AttConnEstab_OrigStrmCall_ExcRep

The counter shall be incremented on receipt of RRC CONNECTION REQUEST messages with establishment cause-Originating Streaming Call,at the RNC from the UE. Repeated attempts from the same UE on the same or a different cell - due to cell reselection - are excluded. The counters are pegged on the cell the RRC connection establishment succeeds or finally fails.

Data Source

RNC

© Copyright IBM Corp. 1999, 2009. All rights reserved.

Source Field

VS.RRC.AttConnEstab.OrigStrmCall.ExcRep

Source Section

RRC Connection Establishment

RRC_AttConnEstab_Registration

Number of Attempted RRC Connections Establishments for Registration

Data Source

RNC

Source Field

RRC.AttConnEstab.Registration

Source Section

Radio Resource Management - RRC Connection Related Counter

RRC_AttConnEstab_Registration_ExcRep

The counter shall be incremented on receipt of RRC CONNECTION REQUEST messages with establishment cause-Registration,at the RNC from the UE. Repeated attempts from the same UE on the same or a different cell - due to cell reselection - are excluded. The counters are pegged on the cell the RRC connection establishment succeeds or finally fails.

Data Source

RNC

Source Field

VS.RRC.AttConnEstab.Registration.ExcRep

Source Section

RRC Connection Establishment

RRC_AttConnEstab_sum

Attempted RRC Connection Establishments

Data Source

RNC

Source Field

RRC.AttConnEstab.sum

Source Section

Radio Resource Management - RRC Connection Related Counter

RRC_AttConnEstab_sum_ExcRep

Total number of RRC connection establishment attempts. Repeated attempts from the same UE on the same cell or a different cell - due to cell reselection - are excluded. The counter is pegged on the cell the RRC connection establishment succeeds or finally fails.

Data Source

RNC

Source Field

VS.RRC.AttConnEstab.sum.ExcRep

Source Section

Radio Resource Management - RRC Connection Related Counter

RRC_AttConnEstab_TermBgrdCall

The counter shall be incremented on receipt of RRC CONNECTION REQUEST messages with establishment cause-Terminating Background Call, at the RNC from the UE.

Data Source

RNC

Source Field

RRC.AttConnEstab.TermBgrdCall

Source Section

RRC Connection Establishment

RRC_AttConnEstab_TermBgrdCall_ExcRep

The counter shall be incremented on receipt of RRC CONNECTION REQUEST messages with establishment cause-Terminating Background Call,at the RNC from the UE. Repeated attempts from the same UE on the same or a different cell - due to cell reselection - are excluded. The counters are pegged on the cell the RRC connection establishment succeeds or finally fails.

© Copyright IBM Corp. 1999, 2009. All rights reserved.

Data Source

RNC

Source Field

VS.RRC.AttConnEstab.TermBgrdCall.ExcRep

Source Section

RRC Connection Establishment

RRC_AttConnEstab_TermCallData

Retired fr 3.0.6.0.0 - Number of Attempted RRC Connections Establishments for Terminating Data Calls

Data Source

RNC

Source Field

RRC.AttConnEstab.TermCallData

Source Section

Radio Resource Management - RRC Connection Related Counter

RRC_AttConnEstab_TermConvCall

Number of Attempted RRC Connections Establishments for Terminating Voice Calls

Data Source

RNC

Source Field

RRC.AttConnEstab.TermConvCall

Source Section

RRC Connection Establishment

RRC_AttConnEstab_TermConvCall_ExcRep

The counter shall be incremented on receipt of RRC CONNECTION REQUEST messages with establishment cause-Terminating Conversational Call,at the RNC from the UE. Repeated attempts from the same UE on the same or a different cell - due to cell reselection - are

excluded. The counters are pegged on the cell the RRC connection establishment succeeds or finally fails.

Data Source

RNC

Source Field

VS.RRC.AttConnEstab.TermConvCall.ExcRep

Source Section

RRC Connection Establishment

RRC_AttConnEstab_TermHighPrioSig

The counter shall be incremented on receipt of RRC CONNECTION REQUEST messages with establishment cause-Terminating High Priority Signalling, at the RNC from the UE.

Data Source

RNC

Source Field

RRC.AttConnEstab.TermHighPrioSig

Source Section

RRC Connection Establishment

RRC_AttConnEstab_TermHighPrioSig_ExcRep

The counter shall be incremented on receipt of RRC CONNECTION REQUEST messages with establishment cause-Terminating High Priority Signalling,at the RNC from the UE. Repeated attempts from the same UE on the same or a different cell - due to cell reselection - are excluded. The counters are pegged on the cell the RRC connection establishment succeeds or finally fails.

Data Source

RNC

Source Field

VS.RRC.AttConnEstab.TermHighPrioSig.ExcRep

Source Section

RRC Connection Establishment

© Copyright IBM Corp. 1999, 2009. All rights reserved.

RRC_AttConnEstab_TermIntactCall

The counter shall be incremented on receipt of RRC CONNECTION REQUEST messages with establishment cause-Terminating Interactive Call, at the RNC from the UE.

Data Source

RNC

Source Field

RRC.AttConnEstab.TermIntactCall

Source Section

RRC Connection Establishment

RRC_AttConnEstab_TermIntactCall_ExcRep

The counter shall be incremented on receipt of RRC CONNECTION REQUEST messages with establishment cause-Terminating Interactive Call,at the RNC from the UE. Repeated attempts from the same UE on the same or a different cell - due to cell reselection - are excluded. The counters are pegged on the cell the RRC connection establishment succeeds or finally fails.

Data Source

RNC

Source Field

VS.RRC.AttConnEstab.TermIntactCall.ExcRep

Source Section

RRC Connection Establishment

RRC_AttConnEstab_TermLowPrioSig

Number of Attempted RRC Connections Establishments for Terminations with Low Priority Signalling where Low Priority Signalling includes SMS

Data Source

RNC

Source Field

RRC.AttConnEstab.TermLowPrioSig

Source Section

Radio Resource Management - RRC Connection Related Counter

RRC_AttConnEstab_TermLowPrioSig_ExcRep

The counter shall be incremented on receipt of RRC CONNECTION REQUEST messages with establishment cause-Terminating Low Priority Signalling,at the RNC from the UE. Repeated attempts from the same UE on the same or a different cell - due to cell reselection - are excluded. The counters are pegged on the cell the RRC connection establishment succeeds or finally fails.

Data Source

RNC

Source Field

VS.RRC.AttConnEstab.TermLowPrioSig.ExcRep

Source Section

RRC Connection Establishment

RRC_AttConnEstab_TermStrmCall

The counter shall be incremented on receipt of RRC CONNECTION REQUEST messages with establishment cause-Terminating Streaming Call, at the RNC from the UE.

Data Source

RNC

Source Field

RRC.AttConnEstab.TermStrmCall

Source Section

RRC Connection Establishment

RRC_AttConnEstab_TermStrmCall_ExcRep

The counter shall be incremented on receipt of RRC CONNECTION REQUEST messages with establishment cause-Terminating Streaming Call,at the RNC from the UE. Repeated attempts from the same UE on the same or a different cell - due to cell reselection - are excluded. The counters are pegged on the cell the RRC connection establishment succeeds or finally fails.

© Copyright IBM Corp. 1999, 2009. All rights reserved.

Data Source

RNC

Source Field

VS.RRC.AttConnEstab.TermStrmCall.ExcRep

Source Section

RRC Connection Establishment

RRC_AttConnReEstab_CS

Number of attempted RRC re-establishments for CS connections

Data Source

RNC

Source Field

RRC.AttConnReEstab.CS

Source Section

RRC Connection Re-Establishment

RRC_AttConnReEstab_CS_PS

Number of attempted RRC re-establishments for CS&PS combined connections

Data Source

RNC

Source Field

RRC.AttConnReEstab.CS_PS

Source Section

RRC Connection Re-Establishment

RRC_AttConnReEstab_PS

Number of attempted RRC re-establishments for PS connections

Data Source

RNC

Source Field

RRC.AttConnReEstab.PS

Source Section

RRC Connection Re-Establishment

RRC_AttConnRel_CS_Drop_CallSetup

Number of Dropped Standalone RRC Connections (SRB) prior to Call Establishment (CS Services)

Data Source

RNC

Source Field

VS.RRC.AttConnRel.CS.Drop.CallSetup

Source Section

UtranCell

RRC_AttConnRel_Drop_CallSetup

Standalone SRB Dropped RRC Connection Establishments

Data Source

RNC

Source Field

VS.RRC.AttConnRel.Drop.CallSetup

Source Section

Dropped RRC Connections

RRC_AttConnRel_Drop_sum

Retired fr 3.0.6.0.0 - Total Number of Dropped RRC Connections

Data Source

RNC

© Copyright IBM Corp. 1999, 2009. All rights reserved.

Source Field

RRC.AttConnRel.Drop.sum

Source Section

Radio Resource Management - RRC Connection Related Counter

RRC_AttConnRel_Drop_UESigConnRel

Number of Dropped RRC Connections due to a release of the signalling connection by the UE

Data Source

RNC

Source Field

VS.RRC.AttConnRel.Drop.UESigConnRel

Source Section

Dropped RRC Connections

RRC_AttConnRel_Drop_ULRLF

Number of Dropped RRC Connections caused by Radio Link Failure

Data Source

RNC

Source Field

VS.RRC.AttConnRel.Drop.ULRLF

Source Section

Dropped RRC Connections

RRC_AttConnRel_PS_Drop_CallSetup

Number of Dropped Standalone RRC Connections (SRB) prior to Call Establishment (PS Services)

Data Source

RNC

Source Field

VS.RRC.AttConnRel.PS.Drop.CallSetup

Source Section

UtranCell

RRC_FailConnEstab_CAC

Failed RRC Connection Establishments due to Call Admission Control

Data Source

RNC

Source Field

RRC.FailConnEstab.CAC

Source Section

Radio Resource Management - RRC Connection Related Counter

RRC_FailConnEstab_CallRedirectGSM_Emg

Attempted Emergency Call Redirections

Data Source

RNC

Source Field

RRC.FailConnEstab.CallRedirectGSM_Emergency

Source Section

Inter-System Directed Retry

RRC_FailConnEstab_CongOrigBgrdCall

Whenever the RNC sends an -RRC Connection Reject- message with cause -Congestion-, for a failed RRC Connection Request for an Originating Background Call, this counter shall be incremented.

Data Source

RNC

© Copyright IBM Corp. 1999, 2009. All rights reserved.

Source Field

RRC.FailConnEstab.CongOrigBgrdCall

Source Section

RRC Connection Establishment

RRC_FailConnEstab_CongOrigConvCall

Whenever the RNC sends an -RRC Connection Reject- message with cause -Congestion-, for a failed RRC Connection Request for an Originating Conversational Call, this counter shall be incremented.

Data Source

RNC

Source Field

RRC.FailConnEstab.CongOrigConvCall

Source Section

RRC Connection Establishment

RRC_FailConnEstab_CongOrigHighPrioSig

Whenever the RNC sends an -RRC Connection Reject- message with cause -Congestion-, for a failed RRC Connection Request for a Originating High Priority Signalling Call, this counter shall be incremented.

Data Source

RNC

Source Field

RRC.FailConnEstab.CongOrigHighPrioSig

Source Section

RRC Connection Establishment

RRC_FailConnEstab_CongOrigIntactCall

Whenever the RNC sends an -RRC Connection Reject- message with cause -Congestion-, for a failed RRC Connection Request for an Originating Interactive Call, this counter shall be incremented.

Data Source

RNC

Source Field

RRC.FailConnEstab.CongOrigIntactCall

Source Section

RRC Connection Establishment

RRC_FailConnEstab_CongOrigStrmCall

Whenever the RNC sends an -RRC Connection Reject- message with cause -Congestion-, for a failed RRC Connection Request for an Originating Streaming Call, this counter shall be incremented.

Data Source

RNC

Source Field

RRC.FailConnEstab.CongOrigStrmCall

Source Section

RRC Connection Establishment

RRC_FailConnEstab_CongTermBgrdCall

Whenever the RNC sends an -RRC Connection Reject- message with cause -Congestion-, for a failed RRC Connection Request for a Terminating Background Call, this counter shall be incremented.

Data Source

RNC

Source Field

RRC.FailConnEstab.CongTermBgrdCall

Source Section

RRC Connection Establishment

© Copyright IBM Corp. 1999, 2009. All rights reserved.

RRC_FailConnEstab_CongTermConvCall

Whenever the RNC sends an -RRC Connection Reject- message with cause -Congestion-, for a failed RRC Connection Request for a Terminating Conversational Call, this counter shall be incremented.

Data Source

RNC

Source Field

RRC.FailConnEstab.CongTermConvCall

Source Section

RRC Connection Establishment

RRC_FailConnEstab_CongTermIntactCall

Whenever the RNC sends an -RRC Connection Reject- message with cause -Congestion-, for a failed RRC Connection Request for a Terminating Interactive Call, this counter shall be incremented.

Data Source

RNC

Source Field

RRC.FailConnEstab.CongTermIntactCall

Source Section

RRC Connection Establishment

RRC_FailConnEstab_CongTermStrmCall

Whenever the RNC sends an -RRC Connection Reject- message with cause -Congestion-, for a failed RRC Connection Request for a Terminating Streaming Call, this counter shall be incremented.

Data Source

RNC

Source Field

RRC.FailConnEstab.CongTermStrmCall

Source Section

RRC Connection Establishment

RRC_FailConnEstab_LoadThrottle

This counter is incremented, whenever the RNC rejects a received RRC Connection Request due to Excessive Cell load throttling and an RRC CONNECTION REJECT message is sent to the UE. It shall be pegged against the cell the RRC Connection Request message was received on.

Data Source

RNC

Source Field

RRC.FailConnEstab.LoadThrottle

Source Section

RRC Connection Establishment

RRC_FailConnEstab_ProcessorLoad

Number of discarded RRC Connection Requests due to RNC processor load

Data Source

RNC

Source Field

RRC.FailConnEstab.ProcessorLoad

Source Section

RRC Connection Establishment

RRC_FailConnEstab_RLSetupFailure

Failed RRC Connection Establishments due to Radio Link Setup Failure

Data Source

RNC

Source Field

RRC.FailConnEstab.RLSetupFailure

© Copyright IBM Corp. 1999, 2009. All rights reserved.

Source Section

Radio Resource Management - RRC Connection Related Counter

RRC_FailConnEstab_SetupIncomplete

Failed RRC Connection Establishments: Setup Incomplete

Data Source

RNC

Source Field

RRC.FailConnEstab.SetupIncomplete

Source Section

Radio Resource Management - RRC Connection Related Counter

RRC_FailConnEstab_sum

Failed RRC Connection Establishments for all causes

Data Source

RNC

Source Field

RRC.FailConnEstab.sum

Source Section

Radio Resource Management - RRC Connection Related Counter

RRC_RBReconfigAtt

Radio Bearer Reconfiguration Attempts

Data Source

RNC

Source Field

VS.RRC.RBReconfigAtt

Source Section

Radio Bearer Setup and Radio Bearer Reconfiguration Counter

RRC_RBReconfigSucc

Radio Bearer Reconfiguration Success

Data Source

RNC

Source Field

VS.RRC.RBReconfigSucc

Source Section

Radio Bearer Setup and Radio Bearer Reconfiguration Counter

RRC_RBSetupAtt

Attempted Radio Bearer Set-up

Data Source

RNC

Source Field

VS.RRC.RBSetupAtt

Source Section

Radio Bearer Setup and Radio Bearer Reconfiguration Counter

RRC_RBSetupSucc

Successful Radio Bearer Set-up

Data Source

RNC

Source Field

VS.RRC.RBSetupSucc

Source Section

Radio Bearer Setup and Radio Bearer Reconfiguration Counter

RRC_SuccConnEstab_call

Successful RRC Connection Establishments for Call Setup

© Copyright IBM Corp. 1999, 2009. All rights reserved.

Data Source

RNC

Source Field

RRC.SuccConnEstab.call

Source Section

Radio Resource Management - RRC Connection Related Counter

RRC_SuccConnEstab_CallReEstab

Number of successful established RRC Connections per establishment cause - Call re-establishment

Data Source

RNC

Source Field

RRC.SuccConnEstab.CallReEstab

Source Section

RRC Connection Establishment

RRC_SuccConnEstab_CellReselect

Number of successful established RRC Connections per establishment cause - Inter-RAT cell re-selection

Data Source

RNC

Source Field

RRC.SuccConnEstab.CellReselect

Source Section

RRC Connection Establishment

RRC_SuccConnEstab_Detach

Number of successful established RRC Connections per establishment cause - Detach

Data Source

RNC

Source Field

RRC.SuccConnEstab.Detach

Source Section

RRC Connection Establishment

RRC_SuccConnEstab_Emergency

Number of successful established RRC Connections per establishment cause - Emergency

Data Source

RNC

Source Field

RRC.SuccConnEstab.Emergency

Source Section

RRC Connection Establishment

RRC_SuccConnEstab_IratCCO

Number of successful established RRC Connections for Inter-RAT cell change order

Data Source

RNC

Source Field

RRC.SuccConnEstab.IratCCO

Source Section

RRC Connection Establishment

RRC_SuccConnEstab_OrigBgrdCall

Number of successful established RRC Connections per establishment cause - Originating Background Call

© Copyright IBM Corp. 1999, 2009. All rights reserved.

Data Source

RNC

Source Field

RRC.SuccConnEstab.OrigBgrdCall

Source Section

RRC Connection Establishment

RRC_SuccConnEstab_OrigConvCall

Number of successful established RRC Connections per establishment cause - Originating Conversational Call

Data Source

RNC

Source Field

RRC.SuccConnEstab.OrigConvCall

Source Section

RRC Connection Establishment

RRC_SuccConnEstab_OrigHighPrioSig

Number of successful established RRC Connections per establishment cause - Originating High Priority Signalling

Data Source

RNC

Source Field

RRC.SuccConnEstab.OrigHighPrioSig

Source Section

RRC Connection Establishment

RRC_SuccConnEstab_OrigIntactCall

Number of successful established RRC Connections per establishment cause - Originating Interactive Call

Data Source

RNC

Source Field

RRC.SuccConnEstab.OrigIntactCall

Source Section

RRC Connection Establishment

RRC_SuccConnEstab_OrigLowPrioSig

Number of successful established RRC Connections per establishment cause - Originating Low Priority Signalling where Low Priority Signalling includes SMS

Data Source

RNC

Source Field

RRC.SuccConnEstab.OrigLowPrioSig

Source Section

RRC Connection Establishment

RRC_SuccConnEstab_OrigStrmCall

Number of successful established RRC Connections per establishment cause - Originating Streaming Call

Data Source

RNC

Source Field

RRC.SuccConnEstab.OrigStrmCall

Source Section

RRC Connection Establishment

RRC_SuccConnEstab_Registration

Number of successful established RRC Connections per establishment cause - Registration

© Copyright IBM Corp. 1999, 2009. All rights reserved.

Data Source

RNC

Source Field

RRC.SuccConnEstab.Registration

Source Section

RRC Connection Establishment

RRC_SuccConnEstab_sum

Successful RRC Connection Establishments

Data Source

RNC

Source Field

RRC.SuccConnEstab.sum

Source Section

Radio Resource Management - RRC Connection Related Counter

RRC_SuccConnEstab_TermBgrdCall

Number of successful established RRC Connections per establishment cause - Terminating Background Call

Data Source

RNC

Source Field

RRC.SuccConnEstab.TermBgrdCall

Source Section

RRC Connection Establishment

RRC_SuccConnEstab_TermConvCall

Number of successful established RRC Connections per establishment cause - Terminating Conversational Call

Data Source

RNC

Source Field

RRC.SuccConnEstab.TermConvCall

Source Section

RRC Connection Establishment

RRC_SuccConnEstab_TermHighPrioSig

Number of successful established RRC Connections per establishment cause - Terminating High Priority Signalling

Data Source

RNC

Source Field

RRC.SuccConnEstab.TermHighPrioSig

Source Section

RRC Connection Establishment

RRC_SuccConnEstab_TermIntactCall

Number of successful established RRC Connections per establishment cause - Terminating Interactive Call

Data Source

RNC

Source Field

RRC.SuccConnEstab.TermIntactCall

Source Section

RRC Connection Establishment

RRC_SuccConnEstab_TermLowPrioSig

Number of successful established RRC Connections per establishment cause - Terminating Low Priority Signalling where Low Priority Signalling includes SMS

© Copyright IBM Corp. 1999, 2009. All rights reserved.

Data Source

RNC

Source Field

RRC.SuccConnEstab.TermLowPrioSig

Source Section

RRC Connection Establishment

RRC_SuccConnEstab_TermStrmCall

Number of successful established RRC Connections per establishment cause - Terminating Streaming Call

Data Source

RNC

Source Field

RRC.SuccConnEstab.TermStrmCall

Source Section

RRC Connection Establishment

RRC_SuccConnReEstab_CS

Number of successful RRC re-establishments for CS connections

Data Source

RNC

Source Field

RRC.SuccConnReEstab.CS

Source Section

RRC Connection Re-Establishment

RRC_SuccConnReEstab_CS_PS

Number of successful RRC re-establishments for CS & PS connections

Data Source

RNC

Source Field

RRC.SuccConnReEstab.CS_PS

Source Section

RRC Connection Re-Establishment

RRC_SuccConnReEstab_PS

Number of successful RRC re-establishments for PS connections

Data Source

RNC

Source Field

RRC.SuccConnReEstab.PS

Source Section

RRC Connection Re-Establishment

RRC_TransChanReconfigAtt

Transport Channel Reconfiguration Attempts

Data Source

RNC

Source Field

VS.RRC.TransChanReconfigAtt

Source Section

Radio Bearer Setup and Radio Bearer Reconfiguration Counter

RRC_TransChanReconfigSucc

Transport Channel Reconfiguration Success

Data Source

RNC

© Copyright IBM Corp. 1999, 2009. All rights reserved.

Source Field

VS.RRC.TransChanReconfigSucc

Source Section

Radio Bearer Setup and Radio Bearer Reconfiguration Counter

RrcActiveSetUpdateCompleteProcedure

Number of successful RRC ACTIVE SET UPDATE procedure for which the cell is in the list of the active set before or after the AS execution. Incremented once per AS procedure for the cell, irrelevant of number of cells in the active set. (RrcActiveSetUpdateCompleteProcedure)

Data Source

RNC C-Node

Source Field

VS.RrcActiveSetUpdateCompleteProcedure

Source Section

FddCell

RrcActiveSetUpdateUnsuccessRrcActiveSetUpdateFailure

Number of unsuccessful RRC ACTIVE SET UPDATE (RrcActiveSetUpdateFailure)

Data Source

RNC C-Node

Source Field

VS.RrcActiveSetUpdateUnsuccess.RrcActiveSetUpdateFailure

Source Section

FddCell

RrcActiveSetUpdateUnsuccessTimeout

Number of unsuccessful RRC ACTIVE SET UPDATE (Timeout)

Data Source

RNC C-Node

Source Field

VS.RrcActiveSetUpdateUnsuccess.Timeout

Source Section

FddCell

RRCAttCallReEstab

Number of RRC CONNECTION REQUEST with the establish causes (CallReEstab)

Data Source

RNC C-Node

Source Field

VS.RRCAtt.CallReEstab

Source Section

FddCell

RRCAttConnEstabCallReestab

Number of RRC connection request received (CallReestab)

Data Source

RNC C-Node

Source Field

RRC.AttConnEstab.CallReestab

Source Section

FddCell

RRCAttConnEstabDetach

Number of RRC connection request received (Detach)

Data Source

RNC C-Node

Source Field

RRC.AttConnEstab.Detach

© Copyright IBM Corp. 1999, 2009. All rights reserved.

Source Section

FddCell

RRCAttConnEstabEmergency

Number of RRC connection request received (Emergency)

Data Source

RNC C-Node

Source Field

RRC.AttConnEstab.Emergency

Source Section

FddCell

RRCAttConnEstabIRATCCO

Number of RRC connection request received (IRATCCO)

Data Source

RNC C-Node

Source Field

RRC.AttConnEstab.IRATCCO

Source Section

FddCell

RRCAttConnEstabIRATCellResel

Number of RRC connection request received (IRATCellResel)

Data Source

RNC C-Node

Source Field

RRC.AttConnEstab.IRATCellResel

Source Section

FddCell

RRCAttConnEstabLastperProcCallReestab

RRC connection establishment attempts split up per individual establishment cause. Repeated attempts from the same UE on the same or a different cell - due to cell reselection - are excluded. (CallReestab)

Data Source

RNC C-Node

Source Field

VS.RRC.AttConnEstab.LastperProc.CallReestab

Source Section

FddCell

RRCAttConnEstabLastperProcDetach

RRC connection establishment attempts split up per individual establishment cause. Repeated attempts from the same UE on the same or a different cell - due to cell reselection - are excluded. (Detach)

Data Source

RNC C-Node

Source Field

VS.RRC.AttConnEstab.LastperProc.Detach

Source Section

FddCell

RRCAttConnEstabLastperProcEmergency

RRC connection establishment attempts split up per individual establishment cause. Repeated attempts from the same UE on the same or a different cell - due to cell reselection - are excluded. (Emergency)

Data Source

RNC C-Node

Source Field

VS.RRC.AttConnEstab.LastperProc.Emergency

© Copyright IBM Corp. 1999, 2009. All rights reserved.

Source Section

FddCell

RRCAttConnEstabLastperProcIRATCCO

RRC connection establishment attempts split up per individual establishment cause. Repeated attempts from the same UE on the same or a different cell - due to cell reselection - are excluded. (IRATCCO)

Data Source

RNC C-Node

Source Field

VS.RRC.AttConnEstab.LastperProc.IRATCCO

Source Section

FddCell

RRCAttConnEstabLastperProcIRATCellResel

RRC connection establishment attempts split up per individual establishment cause. Repeated attempts from the same UE on the same or a different cell - due to cell reselection - are excluded. (IRATCellResel)

Data Source

RNC C-Node

Source Field

VS.RRC.AttConnEstab.LastperProc.IRATCellResel

Source Section

FddCell

RRCAttConnEstabLastperProcOrigBgrdCall

RRC connection establishment attempts split up per individual establishment cause. Repeated attempts from the same UE on the same or a different cell - due to cell reselection - are excluded. (OrigBgrdCall)

Data Source

RNC C-Node

Source Field

VS.RRC.AttConnEstab.LastperProc.OrigBgrdCall

Source Section

FddCell

RRCAttConnEstabLastperProcOrigConvCall

RRC connection establishment attempts split up per individual establishment cause. Repeated attempts from the same UE on the same or a different cell - due to cell reselection - are excluded. (OrigConvCall)

Data Source

RNC C-Node

Source Field

VS.RRC.AttConnEstab.LastperProc.OrigConvCall

Source Section

FddCell

RRCAttConnEstabLastperProcOrigHighPrioSig

RRC connection establishment attempts split up per individual establishment cause. Repeated attempts from the same UE on the same or a different cell - due to cell reselection - are excluded. (OrigHighPrioSig)

Data Source

RNC C-Node

Source Field

VS.RRC.AttConnEstab.LastperProc.OrigHighPrioSig

Source Section

FddCell

RRCAttConnEstabLastperProcOrigIntactCall

RRC connection establishment attempts split up per individual establishment cause. Repeated attempts from the same UE on the same or a different cell - due to cell reselection - are excluded. (OrigIntactCall)

© Copyright IBM Corp. 1999, 2009. All rights reserved.

Data Source

RNC C-Node

Source Field

VS.RRC.AttConnEstab.LastperProc.OrigIntactCall

Source Section

FddCell

RRCAttConnEstabLastperProcOrigLowPrioSig

RRC connection establishment attempts split up per individual establishment cause. Repeated attempts from the same UE on the same or a different cell - due to cell reselection - are excluded. (OrigLowPrioSig)

Data Source

RNC C-Node

Source Field

VS.RRC.AttConnEstab.LastperProc.OrigLowPrioSig

Source Section

FddCell

RRCAttConnEstabLastperProcOrigStrmCall

RRC connection establishment attempts split up per individual establishment cause. Repeated attempts from the same UE on the same or a different cell - due to cell reselection - are excluded. (OrigStrmCall)

Data Source

RNC C-Node

Source Field

VS.RRC.AttConnEstab.LastperProc.OrigStrmCall

Source Section

FddCell

RRCAttConnEstabLastperProcOrigSubscCall

RRC connection establishment attempts split up per individual establishment cause. Repeated attempts from the same UE on the same or a different cell - due to cell reselection - are excluded. (OrigSubscCall)

Data Source

RNC C-Node

Source Field

VS.RRC.AttConnEstab.LastperProc.OrigSubscCall

Source Section

FddCell

RRCAttConnEstabLastperProcRegistration

RRC connection establishment attempts split up per individual establishment cause. Repeated attempts from the same UE on the same or a different cell - due to cell reselection - are excluded. (Registration)

Data Source

RNC C-Node

Source Field

VS.RRC.AttConnEstab.LastperProc.Registration

Source Section

FddCell

RRCAttConnEstabLastperProcSum

Total number of RRC connection establishment attempts. Repeated attempts from the same UE on the same or a different cell - due to cell reselection - are excluded. (Sum)

Data Source

RNC C-Node

Source Field

VS.RRC.AttConnEstab.LastperProc.Sum

© Copyright IBM Corp. 1999, 2009. All rights reserved.

Source Section

FddCell

RRCAttConnEstabLastperProcTermBgrdCall

RRC connection establishment attempts split up per individual establishment cause. Repeated attempts from the same UE on the same or a different cell - due to cell reselection - are excluded. (TermBgrdCall)

Data Source

RNC C-Node

Source Field

VS.RRC.AttConnEstab.LastperProc.TermBgrdCall

Source Section

FddCell

RRCAttConnEstabLastperProcTermConvCall

RRC connection establishment attempts split up per individual establishment cause. Repeated attempts from the same UE on the same or a different cell - due to cell reselection - are excluded. (TermConvCall)

Data Source

RNC C-Node

Source Field

VS.RRC.AttConnEstab.LastperProc.TermConvCall

Source Section

FddCell

RRCAttConnEstabLastperProcTermHighPrioSig

RRC connection establishment attempts split up per individual establishment cause. Repeated attempts from the same UE on the same or a different cell - due to cell reselection - are excluded. (TermHighPrioSig)

Data Source

RNC C-Node

Source Field

VS.RRC.AttConnEstab.LastperProc.TermHighPrioSig

Source Section

FddCell

RRCAttConnEstabLastperProcTermIntactCall

RRC connection establishment attempts split up per individual establishment cause. Repeated attempts from the same UE on the same or a different cell - due to cell reselection - are excluded. (TermIntactCall)

Data Source

RNC C-Node

Source Field

VS.RRC.AttConnEstab.LastperProc.TermIntactCall

Source Section

FddCell

RRCAttConnEstabLastperProcTermLowPrioSig

RRC connection establishment attempts split up per individual establishment cause. Repeated attempts from the same UE on the same or a different cell - due to cell reselection - are excluded. (TermLowPrioSig)

Data Source

RNC C-Node

Source Field

VS.RRC.AttConnEstab.LastperProc.TermLowPrioSig

Source Section

FddCell

RRCAttConnEstabLastperProcTermStrmCall

RRC connection establishment attempts split up per individual establishment cause. Repeated attempts from the same UE on the same or a different cell - due to cell reselection - are excluded. (TermStrmCall)

© Copyright IBM Corp. 1999, 2009. All rights reserved.

Data Source

RNC C-Node

Source Field

VS.RRC.AttConnEstab.LastperProc.TermStrmCall

Source Section

FddCell

RRCAttConnEstabLastperProcTermUnknown

RRC connection establishment attempts split up per individual establishment cause. Repeated attempts from the same UE on the same or a different cell - due to cell reselection - are excluded. (TermUnknown)

Data Source

RNC C-Node

Source Field

VS.RRC.AttConnEstab.LastperProc.TermUnknown

Source Section

FddCell

RRCAttConnEstabOrigBgrdCall

Number of RRC connection request received (OrigBgrdCall)

Data Source

RNC C-Node

Source Field

RRC.AttConnEstab.OrigBgrdCall

Source Section

FddCell

RRCAttConnEstabOrigConvCall

Number of RRC connection request received (OrigConvCall)

Data Source

RNC C-Node

Source Field

RRC.AttConnEstab.OrigConvCall

Source Section

FddCell

RRCAttConnEstabOrigHighPrioSig

Number of RRC connection request received (OrigHighPrioSig)

Data Source

RNC C-Node

Source Field

RRC.AttConnEstab.OrigHighPrioSig

Source Section

FddCell

RRCAttConnEstabOrigIntactCall

Number of RRC connection request received (OrigIntactCall)

Data Source

RNC C-Node

Source Field

RRC.AttConnEstab.OrigIntactCall

Source Section

FddCell

RRCAttConnEstabOrigLowPrioSig

Number of RRC connection request received (OrigLowPrioSig)

Data Source

RNC C-Node

© Copyright IBM Corp. 1999, 2009. All rights reserved.

Source Field

RRC.AttConnEstab.OrigLowPrioSig

Source Section

FddCell

RRCAttConnEstabOrigStrmCal

Number of RRC connection request received (OrigStrmCal)

Data Source

RNC C-Node

Source Field

RRC.AttConnEstab.OrigStrmCal

Source Section

FddCell

RRCAttConnEstabOrigSubscCall

Number of RRC connection request received (OrigSubscCall)

Data Source

RNC C-Node

Source Field

RRC.AttConnEstab.OrigSubscCall

Source Section

FddCell

RRCAttConnEstabRegistration

Number of RRC connection request received (Registration)

Data Source

RNC C-Node

Source Field

RRC.AttConnEstab.Registration

Source Section

FddCell

RRCAttConnEstabSpare12

Number of RRC connection request received (Spare12)

Data Source

RNC C-Node

Source Field

RRC.AttConnEstab.Spare12

Source Section

FddCell

RRCAttConnEstabTermBgrdCall

Number of RRC connection request received (TermBgrdCall)

Data Source

RNC C-Node

Source Field

RRC.AttConnEstab.TermBgrdCall

Source Section

FddCell

RRCAttConnEstabTermConvCall

Number of RRC connection request received (TermConvCall)

Data Source

RNC C-Node

Source Field

RRC.AttConnEstab.TermConvCall

Source Section

FddCell

© Copyright IBM Corp. 1999, 2009. All rights reserved.

RRCAttConnEstabTermHighPrioSig

Number of RRC connection request received (TermHighPrioSig)

Data Source

RNC C-Node

Source Field

RRC.AttConnEstab.TermHighPrioSig

Source Section

FddCell

RRCAttConnEstabTermIntactCall

Number of RRC connection request received (TermIntactCall)

Data Source

RNC C-Node

Source Field

RRC.AttConnEstab.TermIntactCall

Source Section

FddCell

RRCAttConnEstabTermLowPrioSig

Number of RRC connection request received (TermLowPrioSig)

Data Source

RNC C-Node

Source Field

RRC.AttConnEstab.TermLowPrioSig

Source Section

FddCell

RRCAttConnEstabTermStrmCall

Number of RRC connection request received (TermStrmCall)

Data Source

RNC C-Node

Source Field

RRC.AttConnEstab.TermStrmCall

Source Section

FddCell

RRCAttConnEstabTermUnknown

Number of RRC connection request received (TermUnknown)

Data Source

RNC C-Node

Source Field

RRC.AttConnEstab.TermUnknown

Source Section

FddCell

RRCAttConnRelCSDropCallSetup

Dropped Standalone RRC Connections (SRB) prior to Call Establishment (CS Services) (CallSetup)

Data Source

RNC C-Node

Source Field

VS.RRC.AttConnRel.CS.Drop.CallSetup

Source Section

FddCell

RRCAttConnRelPSDropCallSetup

Dropped Standalone RRC Connections (SRB) prior to Call Establishment (PS Services) (CallSetup)

© Copyright IBM Corp. 1999, 2009. All rights reserved.

Data Source

RNC C-Node

Source Field

VS.RRC.AttConnRel.PS.Drop.CallSetup

Source Section

FddCell

RRCAttDetach

Number of RRC CONNECTION REQUEST with the establish causes (Detach)

Data Source

RNC C-Node

Source Field

VS.RRCAtt.Detach

Source Section

FddCell

RRCAttEmrCall

Number of RRC CONNECTION REQUEST with the establish causes (EmrCall)

Data Source

RNC C-Node

Source Field

VS.RRCAtt.EmrCall

Source Section

FddCell

RRCAttInterRATCellChgOrd

Number of RRC CONNECTION REQUEST with the establish causes (InterRATCellChgOrd)

Data Source

RNC C-Node

Source Field

VS.RRCAtt.InterRATCellChgOrd

Source Section

FddCell

RRCAttInterRATCellResel

Number of RRC CONNECTION REQUEST with the establish causes (InterRATCellResel)

Data Source

RNC C-Node

Source Field

VS.RRCAtt.InterRATCellResel

Source Section

FddCell

RRCAttMoBgrdCall

Number of RRC CONNECTION REQUEST with the establish causes (MoBgrdCall)

Data Source

RNC C-Node

Source Field

VS.RRCAtt.MoBgrdCall

Source Section

FddCell

RRCAttMoConvCall

Number of RRC CONNECTION REQUEST with the establish causes (MoConvCall)

Data Source

RNC C-Node

Source Field

VS.RRCAtt.MoConvCall

© Copyright IBM Corp. 1999, 2009. All rights reserved.

Source Section

FddCell

RRCAttMoHighPSig

Number of RRC CONNECTION REQUEST with the establish causes (MoHighPSig)

Data Source

RNC C-Node

Source Field

VS.RRCAtt.MoHighPSig

Source Section

FddCell

RRCAttMoIntactCall

Number of RRC CONNECTION REQUEST with the establish causes (MoIntactCall)

Data Source

RNC C-Node

Source Field

VS.RRCAtt.MoIntactCall

Source Section

FddCell

RRCAttMoLowPSig

Number of RRC CONNECTION REQUEST with the establish causes (MoLowPSig)

Data Source

RNC C-Node

Source Field

VS.RRCAtt.MoLowPSig

Source Section

FddCell

RRCAttMoPresv

Number of RRC CONNECTION REQUEST with the establish causes (MoPresv)

Data Source

RNC C-Node

Source Field

VS.RRCAtt.MoPresv

Source Section

FddCell

RRCAttMoStrmCall

Number of RRC CONNECTION REQUEST with the establish causes (MoStrmCall)

Data Source

RNC C-Node

Source Field

VS.RRCAtt.MoStrmCall

Source Section

FddCell

RRCAttMoSubsTrafCall

Number of RRC CONNECTION REQUEST with the establish causes (MoSubsTrafCall)

Data Source

RNC C-Node

Source Field

VS.RRCAtt.MoSubsTrafCall

Source Section

FddCell

RRCAttMtBgrdCall

Number of RRC CONNECTION REQUEST with the establish causes (MtBgrdCall)

© Copyright IBM Corp. 1999, 2009. All rights reserved.

Data Source

RNC C-Node

Source Field

VS.RRCAtt.MtBgrdCall

Source Section

FddCell

RRCAttMtCauseUnk

Number of RRC CONNECTION REQUEST with the establish causes (MtCauseUnk)

Data Source

RNC C-Node

Source Field

VS.RRCAtt.MtCauseUnk

Source Section

FddCell

RRCAttMtConvCall

Number of RRC CONNECTION REQUEST with the establish causes (MtConvCall)

Data Source

RNC C-Node

Source Field

VS.RRCAtt.MtConvCall

Source Section

FddCell

RRCAttMtHighPSig

Number of RRC CONNECTION REQUEST with the establish causes (MtHighPSig)

Data Source

RNC C-Node

Source Field

VS.RRCAtt.MtHighPSig

Source Section

FddCell

RRCAttMtIntactCall

Number of RRC CONNECTION REQUEST with the establish causes (MtIntactCall)

Data Source

RNC C-Node

Source Field

VS.RRCAtt.MtIntactCall

Source Section

FddCell

RRCAttMtLowPSig

Number of RRC CONNECTION REQUEST with the establish causes (MtLowPSig)

Data Source

RNC C-Node

Source Field

VS.RRCAtt.MtLowPSig

Source Section

FddCell

RRCAttMtPresv

Number of RRC CONNECTION REQUEST with the establish causes (MtPresv)

Data Source

RNC C-Node

Source Field

VS.RRCAtt.MtPresv

© Copyright IBM Corp. 1999, 2009. All rights reserved.

Source Section

FddCell

RRCAttMtStrmCall

Number of RRC CONNECTION REQUEST with the establish causes (MtStrmCall)

Data Source

RNC C-Node

Source Field

VS.RRCAtt.MtStrmCall

Source Section

FddCell

RRCAttReg

Number of RRC CONNECTION REQUEST with the establish causes (Reg)

Data Source

RNC C-Node

Source Field

VS.RRCAtt.Reg

Source Section

FddCell

RrcAvgNbrCellFachAvg

Average number of calls in RRC state Cell_Fach (Avg)

Data Source

RNC C-Node

Source Field

VS.RrcAvgNbrCellFach.Avg

Source Section

FddCell

RrcAvgNbrCellFachCum

Average number of calls in RRC state Cell_Fach (Cum)

Data Source

RNC C-Node

Source Field

VS.RrcAvgNbrCellFach.Cum

Source Section

FddCell

RrcAvgNbrCellFachMax

Average number of calls in RRC state Cell_Fach (Max)

Data Source

RNC C-Node

Source Field

VS.RrcAvgNbrCellFach.Max

Source Section

FddCell

RrcAvgNbrCellFachMin

Average number of calls in RRC state Cell_Fach (Min)

Data Source

RNC C-Node

Source Field

VS.RrcAvgNbrCellFach.Min

Source Section

FddCell

RrcAvgNbrCellFachNbEvt

Average number of calls in RRC state Cell_Fach (NbEvt)

© Copyright IBM Corp. 1999, 2009. All rights reserved.

Data Source

RNC C-Node

Source Field

VS.RrcAvgNbrCellFach.NbEvt

Source Section

FddCell

RRCCdmaHOFromUtranCmdHandover

Number of HO FROM UTRAN COMMAND messages transmission from RNC to UE (Handover)

Data Source

RNC C-Node

Source Field

VS.RRCCdmaHOFromUtranCmd.Handover

Source Section

FddCell

RRCCdmaHOFromUtranCmdHandoverUTRAN

Number of HO FROM UTRAN COMMAND messages transmission from RNC to UE (HandoverUTRAN)

Data Source

RNC C-Node

Source Field

VS.RRCCdmaHOFromUtranCmd.HandoverUTRAN

Source Section

FddCell

RRCCdmaHOFromUtranCompSuccHO

Number of IU RELEASE COMMAND messages received by RNC from CN (SuccHO)

Data Source

RNC C-Node

Source Field

VS.RRCCdmaHOFromUtranComp.SuccHO

Source Section

FddCell

RRCCdmaHOFromUtranCompSuccHOUTRAN

Number of IU RELEASE COMMAND messages received by RNC from CN (SuccHOUTRAN)

Data Source

RNC C-Node

Source Field

VS.RRCCdmaHOFromUtranComp.SuccHOUTRAN

Source Section

FddCell

RRCCdmaHOFromUtranFailFailHO

Number of HANDOVER FROM UTRAN FAILURE messages received by RNC from UE (FailHO)

Data Source

RNC C-Node

Source Field

VS.RRCCdmaHOFromUtranFail.FailHO

Source Section

FddCell

RRCCdmaHOFromUtranFailFailHOUTRAN

Number of HANDOVER FROM UTRAN FAILURE messages received by RNC from UE (FailHOUTRAN)

© Copyright IBM Corp. 1999, 2009. All rights reserved.

Data Source

RNC C-Node

Source Field

VS.RRCCdmaHOFromUtranFail.FailHOUTRAN

Source Section

FddCell

RRCCdmaHOPrepAtt

Number of RANAP RELOCATION REQUIRED messages send by RNC to CN (RRCCdmaHOPrepAtt)

Data Source

RNC C-Node

Source Field

VS.RRCCdmaHOPrepAtt

Source Section

FddCell

RRCCdmaHOPrepFailFailPrepHOUTRAN

Number of RELOCATION PREPARATION FAILURE message received by RNC from CN (FailPrepHOUTRAN)

Data Source

RNC C-Node

Source Field

VS.RRCCdmaHOPrepFail.FailPrepHOUTRAN

Source Section

FddCell

RRCCdmaHOPrepFailTmoPrepHO

Number of RELOCATION PREPARATION FAILURE message received by RNC from CN (TmoPrepHO)

Data Source

RNC C-Node

Source Field

VS.RRCCdmaHOPrepFail.TmoPrepHO

Source Section

FddCell

RRCCdmaHOPrePSucc

Number of RELOCATION COMMAND messages received by RNC from CN (RRCCdmaHOPrePSucc)

Data Source

RNC C-Node

Source Field

VS.RRCCdmaHOPrePSucc

Source Section

FddCell

RrcCellChangeFromUtranTrigByUeTxPowerMax

Number of 3G 2G PS handovers with a reference cell for which the RNC is serving and the handover has been initiated because of UE Tx Power Max Alarm criterion hit (RrcCellChangeFromUtranTrigByUeTxPowerMax)

Data Source

RNC C-Node

Source Field

VS.RrcCellChangeFromUtranTrigByUeTxPowerMax

Source Section

FddCell

© Copyright IBM Corp. 1999, 2009. All rights reserved.

RrcCellChgOrderUtranCmdTrigEcNo

Number of Inter-Rat Cell Change Order from Utran sent by RNC with a reference cell for which the RNC is serving and the handover has been initiated because of Ec/No. (RrcCellChgOrderUtranCmdTrigEcNo)

Data Source

RNC C-Node

Source Field

VS.RrcCellChgOrderUtranCmdTrigEcNo

Source Section

FddCell

RrcCellChgOrderUtranCmdTrigRncCellNoRsrcAvailCacFailure

Number of Inter Rat Cell Change Order form Utran messages sent by RNC with a reference cell for which the iRNC is serving and the handover has been initiated because of CAC failure or Service events. (NoRsrcAvailCacFailure)

Data Source

RNC C-Node

Source Field

VS.RrcCellChgOrderUtranCmdTrigRncCell.NoRsrcAvailCacFailure

Source Section

FddCell

RrcCellChgOrderUtranCmdTrigRncCellServicePs

Number of Inter Rat Cell Change Order form Utran messages sent by RNC with a reference cell for which the iRNC is serving and the handover has been initiated because of CAC failure or Service events. (ServicePs)

Data Source

RNC C-Node

Source Field

VS.RrcCellChgOrderUtranCmdTrigRncCell.ServicePs

Source Section

FddCell

RrcCellChgOrderUtranCmdTrigRscp

Number of Inter-Rat Cell Change Order form Utran messages sent by RNC when the reference cell is on the serving RNC and the handover has been initiated because of RSCP criteria. (RrcCellChgOrderUtranCmdTrigRscp)

Data Source

RNC C-Node

Source Field

VS.RrcCellChgOrderUtranCmdTrigRscp

Source Section

FddCell

RrcCnnectAttOutgoingCallReestab

Number of times that RNC instructs UE to setup a call on a different cell with a different frequency from the initial RACH cell. (CallReestab)

Data Source

RNC C-Node

Source Field

VS.RrcCnnectAttOutgoing.CallReestab

Source Section

FddCell

RrcCnnectAttOutgoingOrigBgrdCall

Number of times that RNC instructs UE to setup a call on a different cell with a different frequency from the initial RACH cell. (OrigBgrdCall)

Data Source

RNC C-Node

Source Field

VS.RrcCnnectAttOutgoing.OrigBgrdCall

© Copyright IBM Corp. 1999, 2009. All rights reserved.

Source Section

FddCell

RrcCnnectAttOutgoingOrigConvCall

Number of times that RNC instructs UE to setup a call on a different cell with a different frequency from the initial RACH cell. (OrigConvCall)

Data Source

RNC C-Node

Source Field

VS.RrcCnnectAttOutgoing.OrigConvCall

Source Section

FddCell

RrcCnnectAttOutgoingOrigHighPrioSig

Number of times that RNC instructs UE to setup a call on a different cell with a different frequency from the initial RACH cell. (OrigHighPrioSig)

Data Source

RNC C-Node

Source Field

VS.RrcCnnectAttOutgoing.OrigHighPrioSig

Source Section

FddCell

RrcCnnectAttOutgoingOrigIntactCall

Number of times that RNC instructs UE to setup a call on a different cell with a different frequency from the initial RACH cell. (OrigIntactCall)

Data Source

RNC C-Node

Source Field

VS.RrcCnnectAttOutgoing.OrigIntactCall

Source Section

FddCell

RrcCnnectAttOutgoingOrigLowPrioSig

Number of times that RNC instructs UE to setup a call on a different cell with a different frequency from the initial RACH cell. (OrigLowPrioSig)

Data Source

RNC C-Node

Source Field

VS.RrcCnnectAttOutgoing.OrigLowPrioSig

Source Section

FddCell

RrcCnnectAttOutgoingOrigStrmCal

Number of times that RNC instructs UE to setup a call on a different cell with a different frequency from the initial RACH cell. (OrigStrmCal)

Data Source

RNC C-Node

Source Field

VS.RrcCnnectAttOutgoing.OrigStrmCal

Source Section

FddCell

RrcCnnectAttOutgoingOrigSubscCall

Number of times that RNC instructs UE to setup a call on a different cell with a different frequency from the initial RACH cell. (OrigSubscCall)

Data Source

RNC C-Node

Source Field

VS.RrcCnnectAttOutgoing.OrigSubscCall

© Copyright IBM Corp. 1999, 2009. All rights reserved.

Source Section

FddCell

RrcCnnectAttOutgoingRegistration

Number of times that RNC instructs UE to setup a call on a different cell with a different frequency from the initial RACH cell. (Registration)

Data Source

RNC C-Node

Source Field

VS.RrcCnnectAttOutgoing.Registration

Source Section

FddCell

RrcCnnectAttOutgoingTermBgrdCall

Number of times that RNC instructs UE to setup a call on a different cell with a different frequency from the initial RACH cell. (TermBgrdCall)

Data Source

RNC C-Node

Source Field

VS.RrcCnnectAttOutgoing.TermBgrdCall

Source Section

FddCell

RrcCnnectAttOutgoingTermConvCall

Number of times that RNC instructs UE to setup a call on a different cell with a different frequency from the initial RACH cell. (TermConvCall)

Data Source

RNC C-Node

Source Field

VS.RrcCnnectAttOutgoing.TermConvCall

Source Section

FddCell

RrcCnnectAttOutgoingTermHighPrioSig

Number of times that RNC instructs UE to setup a call on a different cell with a different frequency from the initial RACH cell. (TermHighPrioSig)

Data Source

RNC C-Node

Source Field

VS.RrcCnnectAttOutgoing.TermHighPrioSig

Source Section

FddCell

RrcCnnectAttOutgoingTermIntactCall

Number of times that RNC instructs UE to setup a call on a different cell with a different frequency from the initial RACH cell. (TermIntactCall)

Data Source

RNC C-Node

Source Field

VS.RrcCnnectAttOutgoing.TermIntactCall

Source Section

FddCell

RrcCnnectAttOutgoingTermLowPrioSig

Number of times that RNC instructs UE to setup a call on a different cell with a different frequency from the initial RACH cell. (TermLowPrioSig)

Data Source

RNC C-Node

Source Field

VS.RrcCnnectAttOutgoing.TermLowPrioSig

© Copyright IBM Corp. 1999, 2009. All rights reserved.

Source Section

FddCell

RrcCnnectAttOutgoingTermStrmCall

Number of times that RNC instructs UE to setup a call on a different cell with a different frequency from the initial RACH cell. (TermStrmCall)

Data Source

RNC C-Node

Source Field

VS.RrcCnnectAttOutgoing.TermStrmCall

Source Section

FddCell

RRCConnDrop_Period_CellUpdate

Number of Dropped RRC Connection due to Failed Periodical Cell Update in Cell FACH

Data Source

RNC

Source Field

VS.RRCConnDrop.Period_CellUpdate

Source Section

Paging, Cell and URA Update

RrcConnectAttIncomingCallReestab

Number of times that RNC instructs UE to setup a call on a different cell with a different frequency from the initial RACH cell. (CallReestab)

Data Source

RNC C-Node

Source Field

VS.RrcConnectAttIncoming.CallReestab

Source Section

FddCell

RrcConnectAttIncomingOrigBgrdCall

Number of times that RNC instructs UE to setup a call on a different cell with a different frequency from the initial RACH cell. (OrigBgrdCall)

Data Source

RNC C-Node

Source Field

VS.RrcConnectAttIncoming.OrigBgrdCall

Source Section

FddCell

RrcConnectAttIncomingOrigConvCall

Number of times that RNC instructs UE to setup a call on a different cell with a different frequency from the initial RACH cell. (OrigConvCall)

Data Source

RNC C-Node

Source Field

VS.RrcConnectAttIncoming.OrigConvCall

Source Section

FddCell

RrcConnectAttIncomingOrigHighPrioSig

Number of times that RNC instructs UE to setup a call on a different cell with a different frequency from the initial RACH cell. (OrigHighPrioSig)

Data Source

RNC C-Node

Source Field

VS.RrcConnectAttIncoming.OrigHighPrioSig

© Copyright IBM Corp. 1999, 2009. All rights reserved.

Source Section

FddCell

RrcConnectAttIncomingOrigIntactCall

Number of times that RNC instructs UE to setup a call on a different cell with a different frequency from the initial RACH cell. (OrigIntactCall)

Data Source

RNC C-Node

Source Field

VS.RrcConnectAttIncoming.OrigIntactCall

Source Section

FddCell

RrcConnectAttIncomingOrigLowPrioSig

Number of times that RNC instructs UE to setup a call on a different cell with a different frequency from the initial RACH cell. (OrigLowPrioSig)

Data Source

RNC C-Node

Source Field

VS.RrcConnectAttIncoming.OrigLowPrioSig

Source Section

FddCell

RrcConnectAttIncomingOrigStrmCal

Number of times that RNC instructs UE to setup a call on a different cell with a different frequency from the initial RACH cell. (OrigStrmCal)

Data Source

RNC C-Node

Source Field

VS.RrcConnectAttIncoming.OrigStrmCal

Source Section

FddCell

RrcConnectAttIncomingOrigSubscCall

Number of times that RNC instructs UE to setup a call on a different cell with a different frequency from the initial RACH cell. (OrigSubscCall)

Data Source

RNC C-Node

Source Field

VS.RrcConnectAttIncoming.OrigSubscCall

Source Section

FddCell

RrcConnectAttIncomingRegistration

Number of times that RNC instructs UE to setup a call on a different cell with a different frequency from the initial RACH cell. (Registration)

Data Source

RNC C-Node

Source Field

VS.RrcConnectAttIncoming.Registration

Source Section

FddCell

RrcConnectAttIncomingTermBgrdCall

Number of times that RNC instructs UE to setup a call on a different cell with a different frequency from the initial RACH cell. (TermBgrdCall)

Data Source

RNC C-Node

Source Field

VS.RrcConnectAttIncoming.TermBgrdCall

© Copyright IBM Corp. 1999, 2009. All rights reserved.

Source Section

FddCell

RrcConnectAttIncomingTermConvCall

Number of times that RNC instructs UE to setup a call on a different cell with a different frequency from the initial RACH cell. (TermConvCall)

Data Source

RNC C-Node

Source Field

VS.RrcConnectAttIncoming.TermConvCall

Source Section

FddCell

RrcConnectAttIncomingTermHighPrioSig

Number of times that RNC instructs UE to setup a call on a different cell with a different frequency from the initial RACH cell. (TermHighPrioSig)

Data Source

RNC C-Node

Source Field

VS.RrcConnectAttIncoming.TermHighPrioSig

Source Section

FddCell

RrcConnectAttIncomingTermIntactCall

Number of times that RNC instructs UE to setup a call on a different cell with a different frequency from the initial RACH cell. (TermIntactCall)

Data Source

RNC C-Node

Source Field

VS.RrcConnectAttIncoming.TermIntactCall

Source Section

FddCell

RrcConnectAttIncomingTermLowPrioSig

Number of times that RNC instructs UE to setup a call on a different cell with a different frequency from the initial RACH cell. (TermLowPrioSig)

Data Source

RNC C-Node

Source Field

VS.RrcConnectAttIncoming.TermLowPrioSig

Source Section

FddCell

RrcConnectAttIncomingTermStrmCall

Number of times that RNC instructs UE to setup a call on a different cell with a different frequency from the initial RACH cell. (TermStrmCall)

Data Source

RNC C-Node

Source Field

VS.RrcConnectAttIncoming.TermStrmCall

Source Section

FddCell

RrcConnectionReleaseCongestion

Number of rrc connection release (Congestion)

Data Source

RNC C-Node

Source Field

VS.RrcConnectionRelease.Congestion

© Copyright IBM Corp. 1999, 2009. All rights reserved.

Source Section

FddCell

RrcConnectionReleaseDirectedSignallingConnectionReestablishement

Number of rrc connection release (DirectedSignallingConnectionReestablishement)

Data Source

RNC C-Node

Source Field

VS.RrcConnectionRelease.DirectedSignallingConnectionReestablishement

Source Section

FddCell

RrcConnectionReleaseNormalEvent

Number of rrc connection release (NormalEvent)

Data Source

RNC C-Node

Source Field

VS.RrcConnectionRelease.NormalEvent

Source Section

FddCell

RrcConnectionReleasePreemptiveRelease

Number of rrc connection release (PreemptiveRelease)

Data Source

RNC C-Node

Source Field

VS.RrcConnectionRelease.PreemptiveRelease

Source Section

FddCell

RrcConnectionReleaseReestablishmentReject

Number of rrc connection release (ReestablishmentReject)

Data Source

RNC C-Node

Source Field

VS.RrcConnectionRelease.ReestablishmentReject

Source Section

FddCell

RrcConnectionReleaseRelcauseSpare

Number of rrc connection release (RelcauseSpare)

Data Source

RNC C-Node

Source Field

VS.RrcConnectionRelease.RelcauseSpare

Source Section

FddCell

RrcConnectionReleaseUnspecifiedSccpReleaseCause

Number of rrc connection release (UnspecifiedSccpReleaseCause)

Data Source

RNC C-Node

Source Field

VS.RrcConnectionRelease.UnspecifiedSccpReleaseCause

Source Section

FddCell

RrcConnectionReleaseUserInactivity

Number of rrc connection release (UserInactivity)

© Copyright IBM Corp. 1999, 2009. All rights reserved.

Data Source

RNC C-Node

Source Field

VS.RrcConnectionRelease.UserInactivity

Source Section

FddCell

RrcConnectionSetupFirstRepetitionWithoutQuickRepeat

Number of times the RRC Connection Setup is triggered. (FirstRepetitionWithoutQuickRepeat)

Data Source

RNC C-Node

Source Field

VS.RrcConnectionSetup.FirstRepetitionWithoutQuickRepeat

Source Section

FddCell

RrcConnectionSetupFirstRepetitionWithQuickRepeat

Number of times the RRC Connection Setup is triggered. (FirstRepetitionWithQuickRepeat)

Data Source

RNC C-Node

Source Field

VS.RrcConnectionSetup.FirstRepetitionWithQuickRepeat

Source Section

FddCell

RrcConnectionSetupInitialWithoutQuickRepeat

Number of times the RRC Connection Setup is triggered. (InitialWithoutQuickRepeat)

Data Source

RNC C-Node

Source Field

VS.RrcConnectionSetup.InitialWithoutQuickRepeat

Source Section

FddCell

RrcConnectionSetupInitialWithQuickRepeat

Number of times the RRC Connection Setup is triggered. (InitialWithQuickRepeat)

Data Source

RNC C-Node

Source Field

VS.RrcConnectionSetup.InitialWithQuickRepeat

Source Section

FddCell

RRCFailConnEstab3G2GRedirectEmergency

Failed RRC Connection Establishments by Cause. (3G2GRedirectEmergency)

Data Source

RNC C-Node

Source Field

RRC.FailConnEstab.3G2GRedirectEmergency

Source Section

FddCell

RRCFailConnEstabCAC

Failed RRC Connection Establishments by Cause. (CAC)

Data Source

RNC C-Node

Source Field

RRC.FailConnEstab.CAC

© Copyright IBM Corp. 1999, 2009. All rights reserved.

Source Section

FddCell

RRCFailConnEstabCongOrigBgrdCall

Failed RRC Connection Establishments due to Congestion per Establishment Cause (OrigBgrdCall)

Data Source

RNC C-Node

Source Field

RRC.FailConnEstab.Cong.OrigBgrdCall

Source Section

FddCell

RRCFailConnEstabCongOrigConvCall

Failed RRC Connection Establishments due to Congestion per Establishment Cause (OrigConvCall)

Data Source

RNC C-Node

Source Field

RRC.FailConnEstab.Cong.OrigConvCall

Source Section

FddCell

RRCFailConnEstabCongOrigHighPrioSig

Failed RRC Connection Establishments due to Congestion per Establishment Cause (OrigHighPrioSig)

Data Source

RNC C-Node

Source Field

RRC.FailConnEstab.Cong.OrigHighPrioSig

Source Section

FddCell

RRCFailConnEstabCongOrigIntactCall

Failed RRC Connection Establishments due to Congestion per Establishment Cause (OrigIntactCall)

Data Source

RNC C-Node

Source Field

RRC.FailConnEstab.Cong.OrigIntactCall

Source Section

FddCell

RRCFailConnEstabCongOrigStrmCall

Failed RRC Connection Establishments due to Congestion per Establishment Cause (OrigStrmCall)

Data Source

RNC C-Node

Source Field

RRC.FailConnEstab.Cong.OrigStrmCall

Source Section

FddCell

RRCFailConnEstabCongOrigSubscCall

Failed RRC Connection Establishments due to Congestion per Establishment Cause (OrigSubscCall)

Data Source

RNC C-Node

Source Field

RRC.FailConnEstab.Cong.OrigSubscCall

© Copyright IBM Corp. 1999, 2009. All rights reserved.

Source Section

FddCell

RRCFailConnEstabCongSum

Failed RRC Connection Establishments due to Congestion

Data Source

RNC C-Node

Source Field

RRC.FailConnEstab.Cong.Sum

Source Section

FddCell

RRCFailConnEstabCongTermBgrdCall

Failed RRC Connection Establishments due to Congestion per Establishment Cause (TermBgrdCall)

Data Source

RNC C-Node

Source Field

RRC.FailConnEstab.Cong.TermBgrdCall

Source Section

FddCell

RRCFailConnEstabCongTermConvCall

Failed RRC Connection Establishments due to Congestion per Establishment Cause (TermConvCall)

Data Source

RNC C-Node

Source Field

RRC.FailConnEstab.Cong.TermConvCall

Source Section

FddCell

RRCFailConnEstabCongTermIntactCall

Failed RRC Connection Establishments due to Congestion per Establishment Cause (TermIntactCall)

Data Source

RNC C-Node

Source Field

RRC.FailConnEstab.Cong.TermIntactCall

Source Section

FddCell

RRCFailConnEstabCongTermStrmCall

Failed RRC Connection Establishments due to Congestion per Establishment Cause (TermStrmCall)

Data Source

RNC C-Node

Source Field

RRC.FailConnEstab.Cong.TermStrmCall

Source Section

FddCell

RRCFailConnEstabCPNTI

Failed RRC Connection Establishments by Cause. (CPNTI)

Data Source

RNC C-Node

Source Field

RRC.FailConnEstab.CPNTI

© Copyright IBM Corp. 1999, 2009. All rights reserved.

Source Section

FddCell

RRCFailConnEstabDCH_LackContext

Failed RRC Connection Establishments by Cause. (DCH_LackContext)

Data Source

RNC C-Node

Source Field

RRC.FailConnEstab.DCH_LackContext

Source Section

FddCell

RRCFailConnEstabDLCodeRsrc

Failed RRC Connection Establishments by Cause. (DLCodeRsrc)

Data Source

RNC C-Node

Source Field

RRC.FailConnEstab.DLCodeRsrc

Source Section

FddCell

RRCFailConnEstabDLPowRsrc

Failed RRC Connection Establishments by Cause. (DLPowRsrc)

Data Source

RNC C-Node

Source Field

RRC.FailConnEstab.DLPowRsrc

Source Section

FddCell

RRCFailConnEstabFACH_CAC_or_Unspec

Failed RRC Connection Establishments by Cause. (FACH_CAC_or_Unspec)

Data Source

RNC C-Node

Source Field

RRC.FailConnEstab.FACH_CAC_or_Unspec

Source Section

FddCell

RRCFailConnEstabFACH_LackContext

Failed RRC Connection Establishments by Cause. (FACH_LackContext)

Data Source

RNC C-Node

Source Field

RRC.FailConnEstab.FACH_LackContext

Source Section

FddCell

RRCFailConnEstabFiltered_RLS_CAC

Failed RRC Connection Establishments by Cause. (Filtered_RLS_CAC)

Data Source

RNC C-Node

Source Field

RRC.FailConnEstab.Filtered_RLS_CAC

Source Section

FddCell

RRCFailConnEstabNoRespNodeB

Failed RRC Connection Establishments by Cause. (NoRespNodeB)

© Copyright IBM Corp. 1999, 2009. All rights reserved.

Data Source

RNC C-Node

Source Field

RRC.FailConnEstab.NoRespNodeB

Source Section

FddCell

RRCFailConnEstabOverload

Failed RRC Connection Establishments by Cause. (Overload)

Data Source

RNC C-Node

Source Field

RRC.FailConnEstab.Overload

Source Section

FddCell

RRCFailConnEstabReselect

Failed RRC Connection Establishments by Cause. (Reselect)

Data Source

RNC C-Node

Source Field

RRC.FailConnEstab.Reselect

Source Section

FddCell

RRCFailConnEstabRSSI

Failed RRC Connection Establishments by Cause. (RSSI)

Data Source

RNC C-Node

Source Field

RRC.FailConnEstab.RSSI

Source Section

FddCell

RRCFailConnEstabTimeoutRepeat

Failed RRC Connection Establishments by Cause. (TimeoutRepeat)

Data Source

RNC C-Node

Source Field

RRC.FailConnEstab.TimeoutRepeat

Source Section

FddCell

RRCFailConnEstabUE_EcNo

Failed RRC Connection Establishments by Cause. (UE_EcNo)

Data Source

RNC C-Node

Source Field

RRC.FailConnEstab.UE_EcNo

Source Section

FddCell

RRCFailConnEstabUnspec

Failed RRC Connection Establishments by Cause. (Unspec)

Data Source

RNC C-Node

Source Field

RRC.FailConnEstab.Unspec

© Copyright IBM Corp. 1999, 2009. All rights reserved.

Source Section

FddCell

RrcHoFromUtranCmdTrigByEcNoRescueCs

Number of Inter Rat handover from utran command sent by RNC with a reference cell for which the RNC is serving and the handover has been initiated because of Ec/No. This is in the scope of 3G to 2G handover, CS only. (RescueCs)

Data Source

RNC C-Node

Source Field

VS.RrcHoFromUtranCmdTrigByEcNo.RescueCs

Source Section

FddCell

RrcHoFromUtranCmdTrigByRscpRescueCs

Number of Inter-RAT handover from Utran command sent by RNC with a reference cell for which the RNC is serving, and the handover has been initiated because of RSCP criteria. This is in the scope of 3G to 2G handover, CS only. (RescueCs)

Data Source

RNC C-Node

Source Field

VS.RrcHoFromUtranCmdTrigByRscp.RescueCs

Source Section

FddCell

RrcHoFromUtranCmdTrigByUeTxPowerMax

Number of 3G 2G CS handovers with a reference cell for which the RNC is serving and the handover has been initiated because of UE Tx Power Max Alarm criterion hit (RrcHoFromUtranCmdTrigByUeTxPowerMax)

Data Source

RNC C-Node

Source Field

VS.RrcHoFromUtranCmdTrigByUeTxPowerMax

Source Section

FddCell

RrcHoFromUtranCmdTrigRncNoRsrcAvailCacFailure

Number of Inter-RAT handover from Utran command sent by RNC with a reference cell for which the RNC is serving, and the handover has been initiated because of CAC failure events or Service events, NOT because of Alarm radio condition. This is in the scope of 3G to 2G handover, CS only. (NoRsrcAvailCacFailure)

Data Source

RNC C-Node

Source Field

VS.RrcHoFromUtranCmdTrigRnc.NoRsrcAvailCacFailure

Source Section

FddCell

RrcHoFromUtranCmdTrigRncServiceCs

Number of Inter-RAT handover from Utran command sent by RNC with a reference cell for which the RNC is serving, and the handover has been initiated because of CAC failure events or Service events, NOT because of Alarm radio condition. This is in the scope of 3G to 2G handover, CS only. (ServiceCs)

Data Source

RNC C-Node

Source Field

VS.RrcHoFromUtranCmdTrigRnc.ServiceCs

Source Section

FddCell

RrcHoFromUtranFailureNoRsrcAvailCacFailure

Number of Inter-Rat Handover from Utran failure received by RNC with a reference cell for which the RNC is serving. This is in the scope of 3G to 2G handover, CS only (NoRsrcAvailCacFailure)

© Copyright IBM Corp. 1999, 2009. All rights reserved.

Data Source

RNC C-Node

Source Field

VS.RrcHoFromUtranFailure.NoRsrcAvailCacFailure

Source Section

FddCell

RrcHoFromUtranFailureRescueCs

Number of Inter-Rat Handover from Utran failure received by RNC with a reference cell for which the RNC is serving. This is in the scope of 3G to 2G handover, CS only (RescueCs)

Data Source

RNC C-Node

Source Field

VS.RrcHoFromUtranFailure.RescueCs

Source Section

FddCell

RrcHoFromUtranFailureServiceCs

Number of Inter-Rat Handover from Utran failure received by RNC with a reference cell for which the RNC is serving. This is in the scope of 3G to 2G handover, CS only (ServiceCs)

Data Source

RNC C-Node

Source Field

VS.RrcHoFromUtranFailure.ServiceCs

Source Section

FddCell

RRCRBReconfigAtt

Attempted Radio Bearer Reconfigurations (RBReconfigAtt)

Data Source

RNC C-Node

Source Field

VS.RRC.RBReconfigAtt

Source Section

FddCell

RRCRBReconfigSucc

Successful Radio Bearer Reconfigurations (RBReconfigSucc)

Data Source

RNC C-Node

Source Field

VS.RRC.RBReconfigSucc

Source Section

FddCell

RrcReEstablishmentAttemptCS_Other

Number of attempt of RRC Cell Update for RRC connection re-establishment procedure (CS_Other)

Data Source

RNC C-Node

Source Field

VS.RrcReEstablishmentAttempt.CS_Other

Source Section

FddCell

RrcReEstablishmentAttemptCSDLRLFail

Number of attempt of RRC Cell Update for RRC connection re-establishment procedure (CSDLRLFail)

© Copyright IBM Corp. 1999, 2009. All rights reserved.

Data Source

RNC C-Node

Source Field

VS.RrcReEstablishmentAttempt.CSDLRLFail

Source Section

FddCell

RrcReEstablishmentAttemptCSULRLFail

Number of attempt of RRC Cell Update for RRC connection re-establishment procedure (CSULRLFail)

Data Source

RNC C-Node

Source Field

VS.RrcReEstablishmentAttempt.CSULRLFail

Source Section

FddCell

RrcReEstablishmentAttemptPS_Other

Number of attempt of RRC Cell Update for RRC connection re-establishment procedure (PS_Other)

Data Source

RNC C-Node

Source Field

VS.RrcReEstablishmentAttempt.PS_Other

Source Section

FddCell

RrcReEstablishmentAttemptPSDLRlcUnrecoverErr

Number of attempt of RRC Cell Update for RRC connection re-establishment procedure (PSDLRlcUnrecoverErr)

Data Source

RNC C-Node

Source Field

VS.RrcReEstablishmentAttempt.PSDLRlcUnrecoverErr

Source Section

FddCell

RrcReEstablishmentAttemptPSDLRLFail

Number of attempt of RRC Cell Update for RRC connection re-establishment procedure (PSDLRLFail)

Data Source

RNC C-Node

Source Field

VS.RrcReEstablishmentAttempt.PSDLRLFail

Source Section

FddCell

RrcReEstablishmentAttemptPSInvCfgFail

Number of attempt of RRC Cell Update for RRC connection re-establishment procedure (PSInvCfgFail)

Data Source

RNC C-Node

Source Field

VS.RrcReEstablishmentAttempt.PSInvCfgFail

Source Section

FddCell

RrcReEstablishmentAttemptPSULRlcUnrecoverErr

Number of attempt of RRC Cell Update for RRC connection re-establishment procedure (PSULRlcUnrecoverErr)

© Copyright IBM Corp. 1999, 2009. All rights reserved.

Data Source

RNC C-Node

Source Field

VS.RrcReEstablishmentAttempt.PSULRlcUnrecoverErr

Source Section

FddCell

RrcReEstablishmentAttemptPSULRLFail

Number of attempt of RRC Cell Update for RRC connection re-establishment procedure (PSULRLFail)

Data Source

RNC C-Node

Source Field

VS.RrcReEstablishmentAttempt.PSULRLFail

Source Section

FddCell

RrcReEstablishmentSuccessCS_Other

Number of successful RRC connection re-establishment by RRC Cell Update (CS_Other)

Data Source

RNC C-Node

Source Field

VS.RrcReEstablishmentSuccess.CS_Other

Source Section

FddCell

RrcReEstablishmentSuccessCSDLRLFail

Number of successful RRC connection re-establishment by RRC Cell Update (CSDLRLFail)

Data Source

RNC C-Node

Source Field

VS.RrcReEstablishmentSuccess.CSDLRLFail

Source Section

FddCell

RrcReEstablishmentSuccessCSULRLFail

Number of successful RRC connection re-establishment by RRC Cell Update (CSULRLFail)

Data Source

RNC C-Node

Source Field

VS.RrcReEstablishmentSuccess.CSULRLFail

Source Section

FddCell

RrcReEstablishmentSuccessPS_Other

Number of successful RRC connection re-establishment by RRC Cell Update (PS_Other)

Data Source

RNC C-Node

Source Field

VS.RrcReEstablishmentSuccess.PS_Other

Source Section

FddCell

RrcReEstablishmentSuccessPSDLRlcUnrecoverErr

Number of successful RRC connection re-establishment by RRC Cell Update (PSDLRlcUnrecoverErr)

© Copyright IBM Corp. 1999, 2009. All rights reserved.

Data Source

RNC C-Node

Source Field

VS.RrcReEstablishmentSuccess.PSDLRlcUnrecoverErr

Source Section

FddCell

RrcReEstablishmentSuccessPSDLRLFail

Number of successful RRC connection re-establishment by RRC Cell Update (PSDLRLFail)

Data Source

RNC C-Node

Source Field

VS.RrcReEstablishmentSuccess.PSDLRLFail

Source Section

FddCell

RrcReEstablishmentSuccessPSInvCfgFail

Number of successful RRC connection re-establishment by RRC Cell Update (PSInvCfgFail)

Data Source

RNC C-Node

Source Field

VS.RrcReEstablishmentSuccess.PSInvCfgFail

Source Section

FddCell

RrcReEstablishmentSuccessPSULRlcUnrecoverErr

Number of successful RRC connection re-establishment by RRC Cell Update (PSULRlcUnrecoverErr)

Data Source

RNC C-Node

Source Field

VS.RrcReEstablishmentSuccess.PSULRlcUnrecoverErr

Source Section

FddCell

RrcReEstablishmentSuccessPSULRLFail

Number of successful RRC connection re-establishment by RRC Cell Update (PSULRLFail)

Data Source

RNC C-Node

Source Field

VS.RrcReEstablishmentSuccess.PSULRLFail

Source Section

FddCell

RrcRelDirectSigCcchAtt

Number of Rrc Released (DirectSigCcchAtt)

Data Source

RNC C-Node

Source Field

VS.RrcRel.DirectSigCcchAtt

Source Section

FddCell

RrcRelUnSpecSccpCcchAtt

Number of Rrc Released (UnSpecSccpCcchAtt)

Data Source

RNC C-Node

© Copyright IBM Corp. 1999, 2009. All rights reserved.

Source Field

VS.RrcRel.UnSpecSccpCcchAtt

Source Section

FddCell

RrcSleepyCellInactivity

Number of minutes since RRC activity was detected for this cell. (RrcSleepyCellInactivity)

Data Source

RNC C-Node

Source Field

VS.RrcSleepyCellInactivity

Source Section

FddCell

RRCSuccConnEstabCallReestab

Number of rrc connection successful (CallReestab)

Data Source

RNC C-Node

Source Field

RRC.SuccConnEstab.CallReestab

Source Section

FddCell

RRCSuccConnEstabDetach

Number of rrc connection successful (Detach)

Data Source

RNC C-Node

Source Field

RRC.SuccConnEstab.Detach

Source Section

FddCell

RRCSuccConnEstabEmergency

Number of rrc connection successful (Emergency)

Data Source

RNC C-Node

Source Field

RRC.SuccConnEstab.Emergency

Source Section

FddCell

RRCSuccConnEstabIRATCCO

Number of rrc connection successful (IRATCCO)

Data Source

RNC C-Node

Source Field

RRC.SuccConnEstab.IRATCCO

Source Section

FddCell

RRCSuccConnEstabIRATCellResel

Number of rrc connection successful (IRATCellResel)

Data Source

RNC C-Node

Source Field

RRC.SuccConnEstab.IRATCellResel

Source Section

FddCell

© Copyright IBM Corp. 1999, 2009. All rights reserved.

RRCSuccConnEstabOrigBgrdCall

Number of rrc connection successful (OrigBgrdCall)

Data Source

RNC C-Node

Source Field

RRC.SuccConnEstab.OrigBgrdCall

Source Section

FddCell

RRCSuccConnEstabOrigConvCall

Number of rrc connection successful (OrigConvCall)

Data Source

RNC C-Node

Source Field

RRC.SuccConnEstab.OrigConvCall

Source Section

FddCell

RRCSuccConnEstabOrigHighPrioSig

Number of rrc connection successful (OrigHighPrioSig)

Data Source

RNC C-Node

Source Field

RRC.SuccConnEstab.OrigHighPrioSig

Source Section

FddCell

RRCSuccConnEstabOrigIntactCall

Number of rrc connection successful (OrigIntactCall)

Data Source

RNC C-Node

Source Field

RRC.SuccConnEstab.OrigIntactCall

Source Section

FddCell

RRCSuccConnEstabOrigLowPrioSig

Number of rrc connection successful (OrigLowPrioSig)

Data Source

RNC C-Node

Source Field

RRC.SuccConnEstab.OrigLowPrioSig

Source Section

FddCell

RRCSuccConnEstabOrigStrmCal

Number of rrc connection successful (OrigStrmCal)

Data Source

RNC C-Node

Source Field

RRC.SuccConnEstab.OrigStrmCal

Source Section

FddCell

RRCSuccConnEstabOrigSubscCall

Number of rrc connection successful (OrigSubscCall)

Data Source

RNC C-Node

© Copyright IBM Corp. 1999, 2009. All rights reserved.

Source Field

RRC.SuccConnEstab.OrigSubscCall

Source Section

FddCell

RRCSuccConnEstabRegistration

Number of rrc connection successful (Registration)

Data Source

RNC C-Node

Source Field

RRC.SuccConnEstab.Registration

Source Section

FddCell

RRCSuccConnEstabSpare12

Number of rrc connection successful (Spare12)

Data Source

RNC C-Node

Source Field

RRC.SuccConnEstab.Spare12

Source Section

FddCell

RRCSuccConnEstabTermBgrdCall

Number of rrc connection successful (TermBgrdCall)

Data Source

RNC C-Node

Source Field

RRC.SuccConnEstab.TermBgrdCall

Source Section

FddCell

RRCSuccConnEstabTermConvCall

Number of rrc connection successful (TermConvCall)

Data Source

RNC C-Node

Source Field

RRC.SuccConnEstab.TermConvCall

Source Section

FddCell

RRCSuccConnEstabTermHighPrioSig

Number of rrc connection successful (TermHighPrioSig)

Data Source

RNC C-Node

Source Field

RRC.SuccConnEstab.TermHighPrioSig

Source Section

FddCell

RRCSuccConnEstabTermIntactCall

Number of rrc connection successful (TermIntactCall)

Data Source

RNC C-Node

Source Field

RRC.SuccConnEstab.TermIntactCall

Source Section

FddCell

© Copyright IBM Corp. 1999, 2009. All rights reserved.

RRCSuccConnEstabTermLowPrioSig

Number of rrc connection successful (TermLowPrioSig)

Data Source

RNC C-Node

Source Field

RRC.SuccConnEstab.TermLowPrioSig

Source Section

FddCell

RRCSuccConnEstabTermStrmCall

Number of rrc connection successful (TermStrmCall)

Data Source

RNC C-Node

Source Field

RRC.SuccConnEstab.TermStrmCall

Source Section

FddCell

RRCSuccConnEstabTermUnknown

Number of rrc connection successful (TermUnknown)

Data Source

RNC C-Node

Source Field

RRC.SuccConnEstab.TermUnknown

Source Section

FddCell

RrcTransitionCellDchToCellFach

Number of RRC state transitions from Cell_Dch to Cell_Fach, incremented for target cell (RrcTransitionCellDchToCellFach)

Data Source

RNC C-Node

Source Field

VS.RrcTransitionCellDchToCellFach

Source Section

FddCell

RrcTransitionCellFachToCellDchAlwaysOnUpgrade

Number of RRC state transitions from Cell_Fach to Cell_Dch (AlwaysOnUpgrade)

Data Source

RNC C-Node

Source Field

VS.RrcTransitionCellFachToCellDch.AlwaysOnUpgrade

Source Section

FddCell

RrcTransitionCellFachToCellDchCallEstablishment

Number of RRC state transitions from Cell_Fach to Cell_Dch (CallEstablishment)

Data Source

RNC C-Node

Source Field

VS.RrcTransitionCellFachToCellDch.CallEstablishment

Source Section

FddCell

© Copyright IBM Corp. 1999, 2009. All rights reserved.

RrcTransitionCellFachToCellDchMultiservice

Number of RRC state transitions from Cell_Fach to Cell_Dch (Multiservice)

Data Source

RNC C-Node

Source Field

VS.RrcTransitionCellFachToCellDch.Multiservice

Source Section

FddCell

sac

Service Area Code, SAC (Ref. 3GPP TS 23.003)

Data Source

OMC-U Bulk CM

Source Field

un:sac

Source Section

UtranCell

secondarySchPower

The power of the secondary synchronisation channel in the cell, DL Power (Ref. 3GPP TS 25.433).

Data Source

OMC-U Bulk CM

Source Field

un:secondarySchPower

Source Section

UtranCell

SHO_AttRLAddUESide

Attempted radio link additions to active link set (UE side)

Data Source

RNC

Source Field

SHO.AttRLAddUESide

Source Section

Soft/Softer Handover - Radio Link Additions and Deletions (UE Side)

SHO_AttRLAddUESide_IntraRNC_CSD

Number of Intra-RNC Soft/Softer Handover Attempts for Service Type CS Data

Data Source

RNC

Source Field

SHO.AttRLAddUESide.IntraRNC.CSD

Source Section

Intra RNC Soft/Softer Handover

SHO_AttRLAddUESide_IntraRNC_CSDandPS

Number of Intra-RNC Soft/Softer Handover Attempts for Service Type Circuit Switched Data combined with any PS data rate

Data Source

RNC

Source Field

SHO.AttRLAddUESide.IntraRNC.CSDandPS

Source Section

Intra RNC Soft/Softer Handover

© Copyright IBM Corp. 1999, 2009. All rights reserved.

SHO_AttRLAddUESide_IntraRNC_CSV

Number of Intra-RNC Soft/Softer Handover Attempts for CS Voice

Data Source

RNC

Source Field

SHO.AttRLAddUESide.IntraRNC.CSV

Source Section

Intra RNC Soft/Softer Handover

SHO_AttRLAddUESide_IntraRNC_CSVandPS

Number of Intra-RNC Soft/Softer Handover Attempts for Service Type Circuit Switched Voice combined with any PS data rate

Data Source

RNC

Source Field

SHO.AttRLAddUESide.IntraRNC.CSVandPS

Source Section

Intra RNC Soft/Softer Handover

SHO_AttRLAddUESide_IntraRNC_PSHighData

Number of Intra-RNC Soft/Softer Handover Attempts for PS with high data rate, >64kbps

Data Source

RNC

Source Field

SHO.AttRLAddUESide.IntraRNC.PSHighData

Source Section

Intra RNC Soft/Softer Handover

SHO_AttRLAddUESide_IntraRNC_PSLowData

Number of Intra-RNC Soft/Softer Handover Attempts for PS with low data rate, <=64kbps

Data Source

RNC

Source Field

SHO.AttRLAddUESide.IntraRNC.PSLowData

Source Section

Intra RNC Soft/Softer Handover

SHO_AttRLAddUESide_IntraRNC_Signalling

Number of Intra-RNC Soft/Softer Handover Attempts for signalling

Data Source

RNC

Source Field

SHO.AttRLAddUESide.IntraRNC.Signalling

Source Section

Intra RNC Soft/Softer Handover

SHO_AttRLDelUESide

Attempted radio link deletions from active link set (UE side)

Data Source

RNC

Source Field

SHO.AttRLDelUESide

Source Section

Soft/Softer Handover: Radio Link Deletions from Active Link Set (UE Side)

SHO_FailRLAddIubUTRANSide_NodeBRes

Failed Radio Link Addition Attempts on Iub (UTRAN side) due to Node B Resources

© Copyright IBM Corp. 1999, 2009. All rights reserved.

Data Source

RNC

Source Field

SHO.FailRLAddIubUTRANSide.NodeBRes

Source Section

Radio Link Set / Addition: Attempts / Successes / Failures (UTRAN side)

SHO_FailRLAddIubUTRANSide_sum

Retired fr 3.0.6.0.0 - Failed Radio Link Addition Attempts on Iub (UTRAN side) due to all causes

Data Source

RNC

Source Field

SHO.FailRLAddIubUTRANSide.sum

Source Section

Radio Link Set / Addition: Attempts / Successes / Failures (UTRAN side)

SHO_FailRLAddUESide_ConfigUnsupport

Failed radio link additions to active link set (UE side) per failure cause - Configuration Unsupported

Data Source

RNC

Source Field

SHO.FailRLAddUESide.ConfigUnsupport

Source Section

Soft/Softer Handover - Radio Link Additions and Deletions (UE Side)

SHO_FailRLAddUESide_IncompSimultReconf

Failed radio link additions to active link set (UE side) per failure cause - Incompatible Simultaneous Reconfiguration

Data Source

RNC

Source Field

SHO.FailRLAddUESide.IncompSimultReconf

Source Section

Soft/Softer Handover - Radio Link Additions and Deletions (UE Side)

SHO_FailRLAddUESide_IntraRNC_CSD

Number of Failed Intra-RNC Soft/Softer Handover Attempts for Service Type CS Data

Data Source

RNC

Source Field

SHO.FailRLAddUESide.IntraRNC.CSD

Source Section

Intra RNC Soft/Softer Handover

SHO_FailRLAddUESide_IntraRNC_CSDandPS

Number of Failed Intra-RNC Soft/Softer Handover Attempts for Service Type CS Data combined with PS (any Data Rate)

Data Source

RNC

Source Field

SHO.FailRLAddUESide.IntraRNC.CSDandPS

Source Section

Intra RNC Soft/Softer Handover

SHO_FailRLAddUESide_IntraRNC_CSV

Number of Failed Intra-RNC Soft/Softer Handover Attempts for CS Voice

© Copyright IBM Corp. 1999, 2009. All rights reserved.

Data Source

RNC

Source Field

SHO.FailRLAddUESide.IntraRNC.CSV

Source Section

Intra RNC Soft/Softer Handover

SHO_FailRLAddUESide_IntraRNC_CSVandPS

Number of Failed Intra-RNC Soft/Softer Handover Attempts for Service Type Circuit Switched Voice combined with any PS data rate

Data Source

RNC

Source Field

SHO.FailRLAddUESide.IntraRNC.CSVandPS

Source Section

Intra RNC Soft/Softer Handover

SHO_FailRLAddUESide_IntraRNC_PSHighData

Number of Failed Intra-RNC Soft/Softer Handover Attempts for PS with high data rate, >64kbps

Data Source

RNC

Source Field

SHO.FailRLAddUESide.IntraRNC.PSHighData

Source Section

Intra RNC Soft/Softer Handover

SHO_FailRLAddUESide_IntraRNC_PSLowData

Number of Failed Intra-RNC Soft/Softer Handover Attempts for PS with low data rate, <=64kbps

Data Source

RNC

Source Field

SHO.FailRLAddUESide.IntraRNC.PSLowData

Source Section

Intra RNC Soft/Softer Handover

SHO_FailRLAddUESide_IntraRNC_Signalling

Number of Failed Intra-RNC Soft/Softer Handover Attempts for signalling

Data Source

RNC

Source Field

SHO.FailRLAddUESide.IntraRNC.Signalling

Source Section

Intra RNC Soft/Softer Handover

SHO_FailRLAddUESide_InvalidConfig

Failed radio link additions to active link set (UE side) per failure cause - Invalid Configuration

Data Source

RNC

Source Field

SHO.FailRLAddUESide.InvalidConfig

Source Section

Soft/Softer Handover - Radio Link Additions and Deletions (UE Side)

SHO_FailRLAddUESide_NoReply

Failed radio link additions to active link set (UE side) per failure cause - No Reply

Data Source

RNC

© Copyright IBM Corp. 1999, 2009. All rights reserved.

Source Field

SHO.FailRLAddUESide.NoReply

Source Section

Soft/Softer Handover - Radio Link Additions and Deletions (UE Side)

SHO_FailRLAddUESide_ProtErr

Failed radio link additions to active link set (UE side) per failure cause - Protocol Error

Data Source

RNC

Source Field

SHO.FailRLAddUESide.ProtErr

Source Section

Soft/Softer Handover - Radio Link Additions and Deletions (UE Side)

SHO_FailRLSetupIubUTRANSide_NodeBRes

Failed Radio Link Setup Attempts on Iub (UTRAN side) due to Node B Resources

Data Source

RNC

Source Field

SHO.FailRLSetupIubUTRANSide.NodeBRes

Source Section

Radio Link Set / Addition: Attempts / Successes / Failures (UTRAN side)

SHO_FailRLSetupIubUTRANSide_sum

Retired fr 3.0.6.0.0 - Failed Radio Link Setup Attempts on Iub (UTRAN side) due to all causes

Data Source

RNC

Source Field

SHO.FailRLSetupIubUTRANSide.sum

Source Section

Radio Link Set / Addition: Attempts / Successes / Failures (UTRAN side)

SHO_FailRLSetupIubUTRANSide_TransRes

Failed Radio Link Setup Attempts on Iub (UTRAN side) due to Transmission Resources

Data Source

RNC

Source Field

SHO.FailRLSetupIubUTRANSide.TransRes

Source Section

Radio Link Set / Addition: Attempts / Successes / Failures (UTRAN side)

SHO_SuccRLAddUESide

Successful radio link additions to active link set (UE side)

Data Source

RNC

Source Field

SHO.SuccRLAddUESide

Source Section

Soft/Softer Handover - Radio Link Additions and Deletions (UE Side)

SHO_SuccRLDelUESide

Successful radio link deletions from active link set (UE side)

Data Source

RNC

Source Field

SHO.SuccRLDelUESide

Source Section

Soft/Softer Handover: Radio Link Deletions from Active Link Set (UE Side)

© Copyright IBM Corp. 1999, 2009. All rights reserved.

SHOAttRLAddUTRANSide

This measurement provides the number of attempted radio link creations (UTRAN side) for each cell. This measurement shall be increased for each attempted radio link setup or radio link addition (Softer HO) (UTRAN side). It is a synthetic counter of sum(VS.RadioLinkSetupSuccess)+VS.RadioLinkSetupUnsuccess.RadioLinkSetupFailure+VS.RadioLinkSetupUnsuccess.TimeOut+sum(VS.RadioLinkAdditionSuccess)+VS.RadioLinkAdditionUnsuccess.RadioLinkAdditionFailure+VS.RadioLinkAdditionUnsuccess.Timeout

Data Source

RNC C-Node

Source Field

SHO.AttRLAddUTRANSide

Source Section

FddCell

SHOAttRLDelUTRANSide

This measurement provides the number of attempted radio link deletions (UTRAN side) for each cell. This measurement shall be increased for each attempted radio link deletion (UTRAN side). It is a synthetic counter of VS.RadioLinkDeletionSuccess+VS.RadioLinkDeletionUnsuccess.

Data Source

RNC C-Node

Source Field

SHO.AttRLDelUTRANSide

Source Section

FddCell

SHOAttUESideRLAdd

Attempted Soft and Softer Handovers with radio link additions / deletions during active set update procedures from a UE point of view. (RLAdd)

Data Source

RNC C-Node

Source Field

SHO.AttUESide.RLAdd

Source Section

FddCell

SHOAttUESideRLDel

Attempted Soft and Softer Handovers with radio link additions / deletions during active set update procedures from a UE point of view. (RLDel)

Data Source

RNC C-Node

Source Field

SHO.AttUESide.RLDel

Source Section

FddCell

SHOFailRLAddUTRANSideFailure

This measurement provides the number of failed radio link creations (UTRAN side) for each cell. This measurement shall be in creased for each failed radio link setup or radio link addition (Softer HO) (UTRAN side). It is a synthetic counter of VS.RadioLinkSetupUnsuccess.RadioLinkSetupFailure+VS.RadioLinkAdditionUnsuccess.RadioLinkAdditionFailure (Failure)

Data Source

RNC C-Node

Source Field

SHO.FailRLAddUTRANSide.Failure

Source Section

FddCell

SHOFailRLAddUTRANSideTimeout

This measurement provides the number of failed radio link creations (UTRAN side) for each cell. This measurement shall be increased for each failed radio link setup or radio link addition (Softer HO) (UTRAN side). It is a synthetic counter of VS.RadioLinkSetupUnsuccess.TimeOut+VS.RadioLinkAdditionUnsuccess.Timeout (Timeout)

© Copyright IBM Corp. 1999, 2009. All rights reserved.

Data Source

RNC C-Node

Source Field

SHO.FailRLAddUTRANSide.Timeout

Source Section

FddCell

SHOSuccRLAddUESide

Number of successful RRC ACTIVE SET UPDATE, incremented for each radio link added or removed. (SuccRLAddUESide)

Data Source

RNC C-Node

Source Field

SHO.SuccRLAddUESide

Source Section

FddCell

SHOSuccRLAddUTRANSide

This measurement provides the number of successful radio link creations (UTRAN side) for each cell. This measurement shall be increased for each successful radio link setup or radio link addition (Softer HO) (UTRAN side). It is a synthetic counter of sum(VS.RadioLinkSetupSuccess)+sum(VS.RadioLinkAdditionSuccess).

Data Source

RNC C-Node

Source Field

SHO.SuccRLAddUTRANSide

Source Section

FddCell

SHOSuccRLDelUESide

Number of successful RRC ACTIVE SET UPDATE, incremented for each radio link added or removed. (SuccRLDelUESide)

Data Source

RNC C-Node

Source Field

SHO.SuccRLDelUESide

Source Section

FddCell

SHOSuccRLDelUTRANSide

This measurement provides the number of successful radio link deletions (UTRAN side) for each cell. This measurement shall be increased for each successful radio link deletion (UTRAN side). It is a synthetic counter of VS.RadioLinkDeletionSuccess.

Data Source

RNC C-Node

Source Field

SHO.SuccRLDelUTRANSide

Source Section

FddCell

SRBonEdchEnteringCellAttAttemptedReconfiguration

Number of calls that can be candidate for SRB on E-DCH (AttemptedReconfiguration)

Data Source

RNC C-Node

Source Field

VS.SRBonEdchEnteringCellAtt.AttemptedReconfiguration

Source Section

FddCell

© Copyright IBM Corp. 1999, 2009. All rights reserved.

SRBonEdchEnteringCellAttUnsuitableNodeBCapabilities

Number of calls that can be candidate for SRB on E-DCH (UnsuitableNodeBCapabilities)

Data Source

RNC C-Node

Source Field

VS.SRBonEdchEnteringCellAtt.UnsuitableNodeBCapabilities

Source Section

FddCell

SRBonEdchEnteringCellCallReconfiguration

Number of calls that were configured with SRB on E-DCH on the cell (CallReconfiguration)

Data Source

RNC C-Node

Source Field

VS.SRBonEdchEnteringCell.CallReconfiguration

Source Section

FddCell

SRBonEdchEnteringCellMobility

Number of calls that were configured with SRB on E-DCH on the cell (Mobility)

Data Source

RNC C-Node

Source Field

VS.SRBonEdchEnteringCell.Mobility

Source Section

FddCell

SuccServCellChangeEDCH

Successful Serving E-DCH Cell Changes

Data Source

RNC

Source Field

VS.SuccServCellChangeEDCH

Source Section

UtranCell

SuccServCellChangeHSDSCH

Successful Serving HS-DSCH Cell Changes

Data Source

RNC

Source Field

VS.SuccServCellChangeHSDSCH

Source Section

UtranCell

SucDchToEdchTransRABRelease

Number of successful DCH to E-DCH transitions (RABRelease)

Data Source

RNC C-Node

Source Field

VS.SucDchToEdchTrans.RABRelease

Source Section

FddCell

SucDchToEdchTransRABSetup

Number of successful DCH to E-DCH transitions (RABSetup)

Data Source

RNC C-Node

© Copyright IBM Corp. 1999, 2009. All rights reserved.

Source Field

VS.SucDchToEdchTrans.RABSetup

Source Section

FddCell

SucEdchToDchTrans

Number of successful E-DCH to DCH transitions (SucEdchToDchTrans)

Data Source

RNC C-Node

Source Field

VS.SucEdchToDchTrans

Source Section

FddCell

SucHspaToDchFallbackCellHsdpaDchToDchDch

Number of calls successfully fallbacked from HSPA to DCH on RAB assignment, mobility or reconfiguration event. (HsdpaDchToDchDch)

Data Source

RNC C-Node

Source Field

VS.SucHspaToDchFallbackCell.HsdpaDchToDchDch

Source Section

FddCell

SucHspaToDchFallbackCellHsdpaEdchToDchDch

Number of calls successfully fallbacked from HSPA to DCH on RAB assignment, mobility or reconfiguration event. (HsdpaEdchToDchDch)

Data Source

RNC C-Node

Source Field

VS.SucHspaToDchFallbackCell.HsdpaEdchToDchDch

Source Section

FddCell

SucHspaToDchFallbackCellHsdpaEdchToHsdpaDch

Number of calls successfully fallbacked from HSPA to DCH on RAB assignment, mobility or reconfiguration event. (HsdpaEdchToHsdpaDch)

Data Source

RNC C-Node

Source Field

VS.SucHspaToDchFallbackCell.HsdpaEdchToHsdpaDch

Source Section

FddCell

uarfcnDl

The DL UTRA absolute Radio Frequency Channel number, UARFCN (Ref. 3GPP TS 25.433).

Data Source

OMC-U Bulk CM

Source Field

un:uarfcnDl

Source Section

UtranCell

uarfcnUl

The UL UTRA absolute Radio Frequency Channel number, UARFCN (Ref. 3GPP TS 25.433).

Data Source

OMC-U Bulk CM

© Copyright IBM Corp. 1999, 2009. All rights reserved.

Source Field

un:uarfcnUl

Source Section

UtranCell

UE_MeasRep_6A_Strm_128UL_HSDSCH

This measurement indicates the number of 6A measurement reports received by the RNC for a UE providing 128kbps UL Streaming with HS DL. The PM indicates that the GBR may not have been fulfilled in the UL for some period of time.

Data Source

RNC

Source Field

VS.UE.MeasRep.6A.Strm.128UL-HSDSCH

Source Section

Power and Signal Strength PMs

UeInterFreqHardHOAttInterCN

Attempted Outgoing Inter Frequency Hard Handover(UE side) (count) (InterCN)

Data Source

RNC C-Node

Source Field

VS.UeInterFreqHardHOAtt.InterCN

Source Section

FddCell

UeInterFreqHardHOAttIntraCN

Attempted Outgoing Inter Frequency Hard Handover(UE side) (count) (IntraCN)

Data Source

RNC C-Node

Source Field

VS.UeInterFreqHardHOAtt.IntraCN

Source Section

FddCell

UeInterFreqHardHOFailureInterCN

Failed Outgoing Inter Frequency Hard Handovers(UE side) (count) (InterCN)

Data Source

RNC C-Node

Source Field

VS.UeInterFreqHardHOFailure.InterCN

Source Section

FddCell

UeInterFreqHardHOFailureIntraCN

Failed Outgoing Inter Frequency Hard Handovers(UE side) (count) (IntraCN)

Data Source

RNC C-Node

Source Field

VS.UeInterFreqHardHOFailure.IntraCN

Source Section

FddCell

UeInterFreqHardHOSuccInterCN

Successful Outgoing Inter Frequency Hard Handovers(UE side) (count) (InterCN)

Data Source

RNC C-Node

Source Field

VS.UeInterFreqHardHOSucc.InterCN

© Copyright IBM Corp. 1999, 2009. All rights reserved.

Source Section

FddCell

UeInterFreqHardHOSuccIntraCN

Successful Outgoing Inter Frequency Hard Handovers(UE side) (count) (IntraCN)

Data Source

RNC C-Node

Source Field

VS.UeInterFreqHardHOSucc.IntraCN

Source Section

FddCell

UeIntraFreqHardHOAttInterCN

Attempted Outgoing Intra Frequency Hard Handover(UE side) (count) (InterCN)

Data Source

RNC C-Node

Source Field

VS.UeIntraFreqHardHOAtt.InterCN

Source Section

FddCell

UeIntraFreqHardHOAttIntraCN

Attempted Outgoing Intra Frequency Hard Handover(UE side) (count) (IntraCN)

Data Source

RNC C-Node

Source Field

VS.UeIntraFreqHardHOAtt.IntraCN

Source Section

FddCell

UeIntraFreqHardHOFailureInterCN

Failed Outgoing Intra Frequency Hard Handovers(UE side) (count) (InterCN)

Data Source

RNC C-Node

Source Field

VS.UeIntraFreqHardHOFailure.InterCN

Source Section

FddCell

UeIntraFreqHardHOFailureIntraCN

Failed Outgoing Intra Frequency Hard Handovers(UE side) (count) (IntraCN)

Data Source

RNC C-Node

Source Field

VS.UeIntraFreqHardHOFailure.IntraCN

Source Section

FddCell

UeIntraFreqHardHOSuccInterCN

Successful Outgoing Intra Frequency Hard Handovers(UE side) (count) (InterCN)

Data Source

RNC C-Node

Source Field

VS.UeIntraFreqHardHOSucc.InterCN

Source Section

FddCell

UeIntraFreqHardHOSuccIntraCN

Successful Outgoing Intra Frequency Hard Handovers(UE side) (count) (IntraCN)

© Copyright IBM Corp. 1999, 2009. All rights reserved.

Data Source

RNC C-Node

Source Field

VS.UeIntraFreqHardHOSucc.IntraCN

Source Section

FddCell

UeLocationUebasedAgpsSuccessUeEstimatedAccuracyBetterThan50m

Number of succeeded location of the UE using the UE-based AGPS technology, when the reference cell is located on Serving RNC (UeEstimatedAccuracyBetterThan50m)

Data Source

RNC C-Node

Source Field

VS.UeLocationUebasedAgpsSuccess.UeEstimatedAccuracyBetterThan50m

Source Section

FddCell

UeLocationUebasedAgpsSuccessUeEstimatedAccuracyBetween50mAnd150m

Number of succeeded location of the UE using the UE-based AGPS technology, when the reference cell is located on Serving RNC (UeEstimatedAccuracyBetween50mAnd150m)

Data Source

RNC C-Node

Source Field

VS.UeLocationUebasedAgpsSuccess.UeEstimatedAccuracyBetween50mAnd150m

Source Section

FddCell

UeLocationUebasedAgpsSuccessUeEstimatedAccuraryWorseThan150m

Number of succeeded location of the UE using the UE-based AGPS technology, when the reference cell is located on Serving RNC (UeEstimatedAccuraryWorseThan150m)

Data Source

RNC C-Node

Source Field

VS.UeLocationUebasedAgpsSuccess.UeEstimatedAccuraryWorseThan150m

Source Section

FddCell

UeLocationUebasedAgpsUnsuccessAgpsUEbasedTooLong

Number of failed location of the UE using the UE-based AGPS technology, when the reference cell is located on Serving RNC (AgpsUEbasedTooLong)

Data Source

RNC C-Node

Source Field

VS.UeLocationUebasedAgpsUnsuccess.AgpsUEbasedTooLong

Source Section

FddCell

UeLocationUebasedAgpsUnsuccessIsmlcAssDataTooLong

Number of failed location of the UE using the UE-based AGPS technology, when the reference cell is located on Serving RNC (IsmlcAssDataTooLong)

Data Source

RNC C-Node

Source Field

VS.UeLocationUebasedAgpsUnsuccess.IsmlcAssDataTooLong

Source Section

FddCell

UeLocationUebasedAgpsUnsuccessOther

Number of failed location of the UE using the UE-based AGPS technology, when the reference cell is located on Serving RNC (Other)

© Copyright IBM Corp. 1999, 2009. All rights reserved.

Data Source

RNC C-Node

Source Field

VS.UeLocationUebasedAgpsUnsuccess.Other

Source Section

FddCell

UeLocationUebasedAgpsUnsuccessSasPcapFailure

Number of failed location of the UE using the UE-based AGPS technology, when the reference cell is located on Serving RNC (SasPcapFailure)

Data Source

RNC C-Node

Source Field

VS.UeLocationUebasedAgpsUnsuccess.SasPcapFailure

Source Section

FddCell

UeLocationUebasedAgpsUnsuccessSasServicesNotAvailable

Number of failed location of the UE using the UE-based AGPS technology, when the reference cell is located on Serving RNC (SasServicesNotAvailable)

Data Source

RNC C-Node

Source Field

VS.UeLocationUebasedAgpsUnsuccess.SasServicesNotAvailable

Source Section

FddCell

UeLocationUebasedAgpsUnsuccessUePositioningError

Number of failed location of the UE using the UE-based AGPS technology, when the reference cell is located on Serving RNC (UePositioningError)

Data Source

RNC C-Node

Source Field

VS.UeLocationUebasedAgpsUnsuccess.UePositioningError

Source Section

FddCell

UERBRateAdapDownReqCellDownlink

Number of RB rate downsize triggered by the traffic monitoring. (Downlink)

Data Source

RNC C-Node

Source Field

VS.UERBRateAdapDownReqCell.Downlink

Source Section

FddCell

UERBRateAdapDownReqCellUplink

Number of RB rate downsize triggered by the traffic monitoring. (Uplink)

Data Source

RNC C-Node

Source Field

VS.UERBRateAdapDownReqCell.Uplink

Source Section

FddCell

UERBRateAdapDownSuccCellDownlink

Number of RB Reconfiguration Success resulting from the RB rate downsize (Downlink)

Data Source

RNC C-Node

© Copyright IBM Corp. 1999, 2009. All rights reserved.

Source Field

VS.UERBRateAdapDownSuccCell.Downlink

Source Section

FddCell

UERBRateAdapDownSuccCellUplink

Number of RB Reconfiguration Success resulting from the RB rate downsize (Uplink)

Data Source

RNC C-Node

Source Field

VS.UERBRateAdapDownSuccCell.Uplink

Source Section

FddCell

UERBRateAdapUpReqCellDownlink

Number of RB rate upsize triggered by the traffic monitoring. (Downlink)

Data Source

RNC C-Node

Source Field

VS.UERBRateAdapUpReqCell.Downlink

Source Section

FddCell

UERBRateAdapUpReqCellUplink

Number of RB rate upsize triggered by the traffic monitoring. (Uplink)

Data Source

RNC C-Node

Source Field

VS.UERBRateAdapUpReqCell.Uplink

Source Section

FddCell

UERBRateAdapUpSuccCellDownlink

Number of RB Reconfiguration Success resulting from the RB rate upsize (Downlink)

Data Source

RNC C-Node

Source Field

VS.UERBRateAdapUpSuccCell.Downlink

Source Section

FddCell

UERBRateAdapUpSuccCellUplink

Number of RB Reconfiguration Success resulting from the RB rate upsize (Uplink)

Data Source

RNC C-Node

Source Field

VS.UERBRateAdapUpSuccCell.Uplink

Source Section

FddCell

UeSideHOAttInterCNRLDel

Number of attempted Handovers (Softer or Soft radio link additions and deletions) counted against the reference cell from a UE point of view. (InterCNRLDel)

Data Source

RNC C-Node

Source Field

VS.UeSideHOAtt.InterCNRLDel

© Copyright IBM Corp. 1999, 2009. All rights reserved.

Source Section

FddCell

UeSideHOAttInterCNRLSetup

Number of attempted Handovers (Softer or Soft radio link additions and deletions) counted against the reference cell from a UE point of view. (InterCNRLSetup)

Data Source

RNC C-Node

Source Field

VS.UeSideHOAtt.InterCNRLSetup

Source Section

FddCell

UeSideHOAttSofterHORLAdd

Number of attempted Handovers (Softer or Soft radio link additions and deletions) counted against the reference cell from a UE point of view. (SofterHORLAdd)

Data Source

RNC C-Node

Source Field

VS.UeSideHOAtt.SofterHORLAdd

Source Section

FddCell

UeSideHOAttSofterHORLDel

Number of attempted Handovers (Softer or Soft radio link additions and deletions) counted against the reference cell from a UE point of view. (SofterHORLDel)

Data Source

RNC C-Node

Source Field

VS.UeSideHOAtt.SofterHORLDel

Source Section

FddCell

UeSideHOAttSoftHORLDel

Number of attempted Handovers (Softer or Soft radio link additions and deletions) counted against the reference cell from a UE point of view. (SoftHORLDel)

Data Source

RNC C-Node

Source Field

VS.UeSideHOAtt.SoftHORLDel

Source Section

FddCell

UeSideHOAttSoftHORLSetup

Number of attempted Handovers (Softer or Soft radio link additions and deletions) counted against the reference cell from a UE point of view. (SoftHORLSetup)

Data Source

RNC C-Node

Source Field

VS.UeSideHOAtt.SoftHORLSetup

Source Section

FddCell

UeSideHOSuccInterCNRLDel

Number of successful Handovers (Softer or Soft radio link additions and deletions) counted against the reference cell from a UE point of view. (InterCNRLDel)

Data Source

RNC C-Node

Source Field

VS.UeSideHOSucc.InterCNRLDel

© Copyright IBM Corp. 1999, 2009. All rights reserved.

Source Section

FddCell

UeSideHOSuccInterCNRLSetup

Number of successful Handovers (Softer or Soft radio link additions and deletions) counted against the reference cell from a UE point of view. (InterCNRLSetup)

Data Source

RNC C-Node

Source Field

VS.UeSideHOSucc.InterCNRLSetup

Source Section

FddCell

UeSideHOSuccSofterHORLAdd

Number of successful Handovers (Softer or Soft radio link additions and deletions) counted against the reference cell from a UE point of view. (SofterHORLAdd)

Data Source

RNC C-Node

Source Field

VS.UeSideHOSucc.SofterHORLAdd

Source Section

FddCell

UeSideHOSuccSofterHORLDel

Number of successful Handovers (Softer or Soft radio link additions and deletions) counted against the reference cell from a UE point of view. (SofterHORLDel)

Data Source

RNC C-Node

Source Field

VS.UeSideHOSucc.SofterHORLDel

Source Section

FddCell

UeSideHOSuccSoftHORLDel

Number of successful Handovers (Softer or Soft radio link additions and deletions) counted against the reference cell from a UE point of view. (SoftHORLDel)

Data Source

RNC C-Node

Source Field

VS.UeSideHOSucc.SoftHORLDel

Source Section

FddCell

UeSideHOSuccSoftHORLSetup

Number of successful Handovers (Softer or Soft radio link additions and deletions) counted against the reference cell from a UE point of view. (SoftHORLSetup)

Data Source

RNC C-Node

Source Field

VS.UeSideHOSucc.SoftHORLSetup

Source Section

FddCell

UeSideHOUnsuccInterCNRLAdd

Number of failed Handovers (Softer or Soft radio link additions and deletions) counted against the reference cell from a UE point of view. (InterCNRLAdd)

Data Source

RNC C-Node

Source Field

VS.UeSideHOUnsucc.InterCNRLAdd

© Copyright IBM Corp. 1999, 2009. All rights reserved.

Source Section

FddCell

UeSideHOUnsuccInterCNRLDel

Number of failed Handovers (Softer or Soft radio link additions and deletions) counted against the reference cell from a UE point of view. (InterCNRLDel)

Data Source

RNC C-Node

Source Field

VS.UeSideHOUnsucc.InterCNRLDel

Source Section

FddCell

UeSideHOUnsuccSofterHORLAdd

Number of failed Handovers (Softer or Soft radio link additions and deletions) counted against the reference cell from a UE point of view. (SofterHORLAdd)

Data Source

RNC C-Node

Source Field

VS.UeSideHOUnsucc.SofterHORLAdd

Source Section

FddCell

UeSideHOUnsuccSofterHORLDel

Number of failed Handovers (Softer or Soft radio link additions and deletions) counted against the reference cell from a UE point of view. (SofterHORLDel)

Data Source

RNC C-Node

Source Field

VS.UeSideHOUnsucc.SofterHORLDel

Source Section

FddCell

UeSideHOUnsuccSoftHORLDel

Number of failed Handovers (Softer or Soft radio link additions and deletions) counted against the reference cell from a UE point of view. (SoftHORLDel)

Data Source

RNC C-Node

Source Field

VS.UeSideHOUnsucc.SoftHORLDel

Source Section

FddCell

UeSideHOUnsuccSoftHORLSetup

Number of failed Handovers (Softer or Soft radio link additions and deletions) counted against the reference cell from a UE point of view. (SoftHORLSetup)

Data Source

RNC C-Node

Source Field

VS.UeSideHOUnsucc.SoftHORLSetup

Source Section

FddCell

UEStateTransAtt_DCH_FACH

Number of RB Reconfiguration Attempts: Cell DCH to Cell FACH

Data Source

RNC

Source Field

VS.UEStateTransAtt.DCH_FACH

© Copyright IBM Corp. 1999, 2009. All rights reserved.

Source Section

UE State Transition Performance Measurements

UEStateTransAtt_DCH_PCH

Number of attempted RB reconfigurations to move a UE from Cell DCH to URA PCH

Data Source

RNC

Source Field

VS.UEStateTransAtt.DCH_PCH

Source Section

UE State Transition Performance Measurements

UEStateTransAtt_FACH_DCH

Number of RB Reconfiguration Attempts: Cell FACH to Cell DCH

Data Source

RNC

Source Field

VS.UEStateTransAtt.FACH_DCH

Source Section

UE State Transition Performance Measurements

UEStateTransAtt_FACH_DCH_0kbps

Number of State Transition Attempts: Cell_FACH to Cell_DCH (0kbps/0kbps)

Data Source

RNC

Source Field

VS.UEStateTransAtt.FACH_DCH.0kbps

Source Section

UtranCell

UEStateTransAtt_FACH_DCH_HSDSCH

Number of RB Reconfiguration Attempts: Cell_FACH to Cell_DCH with HS-DSCH

Data Source

RNC

Source Field

VS.UEStateTransAtt.FACH_DCH.HSDSCH

Source Section

Radio Bearer Reconfiguration - State transition counters

UEStateTransAtt_FACH_PCH

Number of UE State Transition Attempts - Cell FACH to URA PCH

Data Source

RNC

Source Field

VS.UEStateTransAtt.FACH_PCH

Source Section

UtranCell

UEStateTransAtt_PCH_DCH

Number of attempted RB reconfigurations to move a UE from URA PCH to Cell DCH

Data Source

RNC

Source Field

VS.UEStateTransAtt.PCH_DCH

Source Section

UE State Transition Performance Measurements

UEStateTransAtt_PCH_DCH_HSDSCH

Number of RB Reconfiguration Attempts: URA_PCH to Cell_DCH with HS-DSCH

© Copyright IBM Corp. 1999, 2009. All rights reserved.

Data Source

RNC

Source Field

VS.UEStateTransAtt.PCH_DCH.HSDSCH

Source Section

Radio Bearer Reconfiguration - State transition counters

UEStateTransAtt_PCH_FACH

Number of RB Reconfiguration Attempts: URA PCH to Cell FACH

Data Source

RNC

Source Field

VS.UEStateTransAtt.PCH_FACH

Source Section

UE State Transition Performance Measurements

UEStateTransAttCellPCH_CellDCHDCH_HSDSCH

Attempted reconfigurations for transitions from Cell_PCH to Cell_DCH with an HS-DSCH. (DCH_HSDSCH)

Data Source

RNC C-Node

Source Field

VS.UEStateTransAtt.CellPCH_CellDCH.DCH_HSDSCH

Source Section

FddCell

UEStateTransAttCellPCHCellDCH

Attempted UE state transitions to move a UE from Cell_PCH to Cell_DCH. (CellDCH)

Data Source

RNC C-Node

Source Field

VS.UEStateTransAtt.CellPCH.CellDCH

Source Section

FddCell

UEStateTransAttFACH_CellDCH

Attempted UE state transition from state Cell_FACH to Cell_DCH. (FACH_CellDCH)

Data Source

RNC C-Node

Source Field

VS.UEStateTransAtt.FACH_CellDCH

Source Section

FddCell

UEStateTransAttUraPCH_CellDCHDCH_HSDSCH

Attempted reconfigurations for transitions from URA_PCH to Cell_DCH with an HS-DSCH. (DCH_HSDSCH)

Data Source

RNC C-Node

Source Field

VS.UEStateTransAtt.UraPCH_CellDCH.DCH_HSDSCH

Source Section

FddCell

UEStateTransAttUraPCHCellDCH

Attempted UE state transitions to move a UE from URA PCH to Cell DCH. (CellDCH)

© Copyright IBM Corp. 1999, 2009. All rights reserved.

Data Source

RNC C-Node

Source Field

VS.UEStateTransAtt.UraPCH.CellDCH

Source Section

FddCell

UEStateTransFail_DCH_FACH

Number of Failed RB Reconfiguration Attempts: Cell DCH to Cell FACH

Data Source

RNC

Source Field

VS.UEStateTransFail.DCH_FACH

Source Section

UE State Transition Performance Measurements

UEStateTransFail_DCH_PCH

Number of failed Cell DCH to URA PCH transitions

Data Source

RNC

Source Field

VS.UEStateTransFail.DCH_PCH

Source Section

UE State Transition Performance Measurements

UEStateTransFail_FACH_DCH_HSDSCH

Number of Failed RB Reconfiguration Attempts: Cell_FACH to Cell_DCH with HS-DSCH

Data Source

RNC

Source Field

VS.UEStateTransFail.FACH_DCH.HSDSCH

Source Section

Radio Bearer Reconfiguration - State transition counters

UEStateTransFail_FACH_DCH_NoResource

Number of Failed RB Reconfiguration Attempts: Cell FACH to Cell DCH - No Resource available

Data Source

RNC

Source Field

VS.UEStateTransFail.FACH_DCH.NoResource

Source Section

UE State Transition Performance Measurements

UEStateTransFail_FACH_DCH_UENoResp

Number of Failed RB Reconfiguration Attempts: Cell FACH to Cell DCH - UE fails to respond

Data Source

RNC

Source Field

VS.UEStateTransFail.FACH_DCH.UENoResp

Source Section

UE State Transition Performance Measurements

UEStateTransFail_FACH_PCH_UENoResp

Number of Failed UE State Transitions - Cell FACH to URA PCH UE fails to respond

Data Source

RNC

© Copyright IBM Corp. 1999, 2009. All rights reserved.

Source Field

VS.UEStateTransFail.FACH_PCH.UENoResp

Source Section

UtranCell

UEStateTransFail_PCH_DCH

Number of failed URA PCH to Cell DCH transitions

Data Source

RNC

Source Field

VS.UEStateTransFail.PCH_DCH

Source Section

UE State Transition Performance Measurements

UEStateTransFail_PCH_DCH_HSDSCH

Number of Failed RB Reconfiguration Attempts: URA_PCH to Cell_DCH with HS-DSCH

Data Source

RNC

Source Field

VS.UEStateTransFail.PCH_DCH.HSDSCH

Source Section

Radio Bearer Reconfiguration - State transition counters

UEStateTransFail_PCH_FACH

Number of Failed RB Reconfiguration Attempts: URA PCH to Cell FACH

Data Source

RNC

Source Field

VS.UEStateTransFail.PCH_FACH

Source Section

UE State Transition Performance Measurements

UEStateTransFailCellPCH_CellDCHDCH_HSDSCH

Failed RB reconfiguration attempts for transitions from Cell_PCH to Cell_DCH with an HS-DSCH. (DCH_HSDSCH)

Data Source

RNC C-Node

Source Field

VS.UEStateTransFail.CellPCH_CellDCH.DCH_HSDSCH

Source Section

FddCell

UEStateTransFailFACHCellDCHNoResource

Failed state transition attempts for Ues moving from state Cell_FACH to Cell_DCH when no resources are available. (NoResource)

Data Source

RNC C-Node

Source Field

VS.UEStateTransFail.FACH.CellDCH.NoResource

Source Section

FddCell

UEStateTransFailFACHCellDCHUENoResp

Failed state transition attempts for Ues moving from state Cell_FACH to Cell_DCH when UE fails to respond. (UENoResp)

Data Source

RNC C-Node

Source Field

VS.UEStateTransFail.FACH.CellDCH.UENoResp

© Copyright IBM Corp. 1999, 2009. All rights reserved.

Source Section

FddCell

UEStateTransFailFACHPCHUENoResp

Failed state transition attempts for Ues moving from state Cell_FACH to Cell/URA_PCH when UE fails to respond. (UENoResp)

Data Source

RNC C-Node

Source Field

VS.UEStateTransFail.FACH.PCH.UENoResp

Source Section

FddCell

UEStateTransFailUraPCH_CellDCHDCH_HSDSCH

Failed RB reconfiguration attempts for transitions from URA_PCH to Cell_DCH with an HS-DSCH. (DCH_HSDSCH)

Data Source

RNC C-Node

Source Field

VS.UEStateTransFail.UraPCH_CellDCH.DCH_HSDSCH

Source Section

FddCell

UEStateTransSucc_DCH_FACH

Successful UE Transitions from Cell_DCH to Cell_FACH

Data Source

RNC

Source Field

VS.UEStateTransSucc.DCH_FACH

Source Section

UtranCell

UEStateTransSucc_DCH_PCH

Successful UE Transitions from Cell_DCH to URA_PCH

Data Source

RNC

Source Field

VS.UEStateTransSucc.DCH_PCH

Source Section

UtranCell

UEStateTransSucc_FACH_DCH_0kbps

Number of State Transition Success : Cell_FACH to Cell_DCH (0kbps/0kbps)

Data Source

RNC

Source Field

VS.UEStateTransSucc.FACH_DCH.0kbps

Source Section

UtranCell

UEStateTransSucc_FACH_PCH

Number of Successful UE State Transitions - Cell FACH to URA PCH

Data Source

RNC

Source Field

VS.UEStateTransSucc.FACH_PCH

Source Section

UtranCell

© Copyright IBM Corp. 1999, 2009. All rights reserved.

UEStateTransSucc_PCH_DCH

Successful UE Transitions from URA_PCH to Cell_DCH

Data Source

RNC

Source Field

VS.UEStateTransSucc.PCH_DCH

Source Section

UtranCell

UEStateTransSucc_PCH_FACH

Successful UE Transitions from URA_PCH to Cell_FACH

Data Source

RNC

Source Field

VS.UEStateTransSucc.PCH_FACH

Source Section

UtranCell

UEStateTransSuccCellPCH_CellDCH

Successful UE transitions from Cell_PCH directly to Cell_DCH (CellPCH_CellDCH)

Data Source

RNC C-Node

Source Field

VS.UEStateTransSucc.CellPCH_CellDCH

Source Section

FddCell

UEStateTransSuccFACH_CellDCH0kbps

Successful state transition attempts transitioning a UE from Cell_FACH to Cell_DCH initiated by CS RAB establishment from Cell_FACH. (0kbps)

Data Source

RNC C-Node

Source Field

VS.UEStateTransSucc.FACH_CellDCH.0kbps

Source Section

FddCell

UEStateTransSuccPCH_FACH

Successful UE Transitions from PCH to Cell_FACH. (PCH_FACH)

Data Source

RNC C-Node

Source Field

VS.UEStateTransSucc.PCH_FACH

Source Section

FddCell

UEStateTransSuccUraPCHCellDCH

Successful UE transitions from URA_PCH directly to Cell_DCH (CellDCH)

Data Source

RNC C-Node

Source Field

VS.UEStateTransSucc.UraPCH.CellDCH

Source Section

FddCell

© Copyright IBM Corp. 1999, 2009. All rights reserved.

UeWithNRadioLinksEstCellsBtsN1RlAvg

Distribution of the number of mobiles having N Radio-Links in their Active Set (N1RlAvg)

Data Source

RNC C-Node

Source Field

VS.UeWithNRadioLinksEstCellsBts.N1Rl.Avg

Source Section

FddCell

UeWithNRadioLinksEstCellsBtsN1RlCum

Distribution of the number of mobiles having N Radio-Links in their Active Set (N1RlCum)

Data Source

RNC C-Node

Source Field

VS.UeWithNRadioLinksEstCellsBts.N1Rl.Cum

Source Section

FddCell

UeWithNRadioLinksEstCellsBtsN1RlMax

Distribution of the number of mobiles having N Radio-Links in their Active Set (N1RlMax)

Data Source

RNC C-Node

Source Field

VS.UeWithNRadioLinksEstCellsBts.N1Rl.Max

Source Section

FddCell

UeWithNRadioLinksEstCellsBtsN1RlMin

Distribution of the number of mobiles having N Radio-Links in their Active Set (N1RlMin)

Data Source

RNC C-Node

Source Field

VS.UeWithNRadioLinksEstCellsBts.N1Rl.Min

Source Section

FddCell

UeWithNRadioLinksEstCellsBtsN1RlNbEvt

Distribution of the number of mobiles having N Radio-Links in their Active Set (N1RlNbEvt)

Data Source

RNC C-Node

Source Field

VS.UeWithNRadioLinksEstCellsBts.N1Rl.NbEvt

Source Section

FddCell

UeWithNRadioLinksEstCellsBtsN2RL1Rc1ABtsAvg

Distribution of the number of mobiles having N Radio-Links in their Active Set (N2RL1Rc1ABtsAvg)

Data Source

RNC C-Node

Source Field

VS.UeWithNRadioLinksEstCellsBts.N2RL1Rc1ABts.Avg

Source Section

FddCell

UeWithNRadioLinksEstCellsBtsN2RL1Rc1ABtsCum

Distribution of the number of mobiles having N Radio-Links in their Active Set (N2RL1Rc1ABtsCum)

© Copyright IBM Corp. 1999, 2009. All rights reserved.

Data Source

RNC C-Node

Source Field

VS.UeWithNRadioLinksEstCellsBts.N2RL1Rc1ABts.Cum

Source Section

FddCell

UeWithNRadioLinksEstCellsBtsN2RL1Rc1ABtsMax

Distribution of the number of mobiles having N Radio-Links in their Active Set (N2RL1Rc1ABtsMax)

Data Source

RNC C-Node

Source Field

VS.UeWithNRadioLinksEstCellsBts.N2RL1Rc1ABts.Max

Source Section

FddCell

UeWithNRadioLinksEstCellsBtsN2RL1Rc1ABtsMin

Distribution of the number of mobiles having N Radio-Links in their Active Set (N2RL1Rc1ABtsMin)

Data Source

RNC C-Node

Source Field

VS.UeWithNRadioLinksEstCellsBts.N2RL1Rc1ABts.Min

Source Section

FddCell

UeWithNRadioLinksEstCellsBtsN2RL1Rc1ABtsNbEvt

Distribution of the number of mobiles having N Radio-Links in their Active Set (N2RL1Rc1ABtsNbEvt)

Data Source

RNC C-Node

Source Field

VS.UeWithNRadioLinksEstCellsBts.N2RL1Rc1ABts.NbEvt

Source Section

FddCell

UeWithNRadioLinksEstCellsBtsN2RL1Rc1SBtsAvg

Distribution of the number of mobiles having N Radio-Links in their Active Set (N2RL1Rc1SBtsAvg)

Data Source

RNC C-Node

Source Field

VS.UeWithNRadioLinksEstCellsBts.N2RL1Rc1SBts.Avg

Source Section

FddCell

UeWithNRadioLinksEstCellsBtsN2RL1Rc1SBtsCum

Distribution of the number of mobiles having N Radio-Links in their Active Set (N2RL1Rc1SBtsCum)

Data Source

RNC C-Node

Source Field

VS.UeWithNRadioLinksEstCellsBts.N2RL1Rc1SBts.Cum

Source Section

FddCell

UeWithNRadioLinksEstCellsBtsN2RL1Rc1SBtsMax

Distribution of the number of mobiles having N Radio-Links in their Active Set (N2RL1Rc1SBtsMax)

© Copyright IBM Corp. 1999, 2009. All rights reserved.

Data Source

RNC C-Node

Source Field

VS.UeWithNRadioLinksEstCellsBts.N2RL1Rc1SBts.Max

Source Section

FddCell

UeWithNRadioLinksEstCellsBtsN2RL1Rc1SBtsMin

Distribution of the number of mobiles having N Radio-Links in their Active Set (N2RL1Rc1SBtsMin)

Data Source

RNC C-Node

Source Field

VS.UeWithNRadioLinksEstCellsBts.N2RL1Rc1SBts.Min

Source Section

FddCell

UeWithNRadioLinksEstCellsBtsN2RL1Rc1SBtsNbEvt

Distribution of the number of mobiles having N Radio-Links in their Active Set (N2RL1Rc1SBtsNbEvt)

Data Source

RNC C-Node

Source Field

VS.UeWithNRadioLinksEstCellsBts.N2RL1Rc1SBts.NbEvt

Source Section

FddCell

UeWithNRadioLinksEstCellsBtsN3RL1Rc1SBts1ABtsAvg

Distribution of the number of mobiles having N Radio-Links in their Active Set (N3RL1Rc1SBts1ABtsAvg)

Data Source

RNC C-Node

Source Field

VS.UeWithNRadioLinksEstCellsBts.N3RL1Rc1SBts1ABts.Avg

Source Section

FddCell

UeWithNRadioLinksEstCellsBtsN3RL1Rc1SBts1ABtsCum

Distribution of the number of mobiles having N Radio-Links in their Active Set (N3RL1Rc1SBts1ABtsCum)

Data Source

RNC C-Node

Source Field

VS.UeWithNRadioLinksEstCellsBts.N3RL1Rc1SBts1ABts.Cum

Source Section

FddCell

UeWithNRadioLinksEstCellsBtsN3RL1Rc1SBts1ABtsMax

Distribution of the number of mobiles having N Radio-Links in their Active Set (N3RL1Rc1SBts1ABtsMax)

Data Source

RNC C-Node

Source Field

VS.UeWithNRadioLinksEstCellsBts.N3RL1Rc1SBts1ABts.Max

Source Section

FddCell

UeWithNRadioLinksEstCellsBtsN3RL1Rc1SBts1ABtsMin

Distribution of the number of mobiles having N Radio-Links in their Active Set (N3RL1Rc1SBts1ABtsMin)

© Copyright IBM Corp. 1999, 2009. All rights reserved.

Data Source

RNC C-Node

Source Field

VS.UeWithNRadioLinksEstCellsBts.N3RL1Rc1SBts1ABts.Min

Source Section

FddCell

UeWithNRadioLinksEstCellsBtsN3RL1Rc1SBts1ABtsNbEvt

Distribution of the number of mobiles having N Radio-Links in their Active Set (N3RL1Rc1SBts1ABtsNbEvt)

Data Source

RNC C-Node

Source Field

VS.UeWithNRadioLinksEstCellsBts.N3RL1Rc1SBts1ABts.NbEvt

Source Section

FddCell

UeWithNRadioLinksEstCellsBtsN3RL1Rc2ABtsAvg

Distribution of the number of mobiles having N Radio-Links in their Active Set (N3RL1Rc2ABtsAvg)

Data Source

RNC C-Node

Source Field

VS.UeWithNRadioLinksEstCellsBts.N3RL1Rc2ABts.Avg

Source Section

FddCell

UeWithNRadioLinksEstCellsBtsN3RL1Rc2ABtsCum

Distribution of the number of mobiles having N Radio-Links in their Active Set (N3RL1Rc2ABtsCum)

Data Source

RNC C-Node

Source Field

VS.UeWithNRadioLinksEstCellsBts.N3RL1Rc2ABts.Cum

Source Section

FddCell

UeWithNRadioLinksEstCellsBtsN3RL1Rc2ABtsMax

Distribution of the number of mobiles having N Radio-Links in their Active Set (N3RL1Rc2ABtsMax)

Data Source

RNC C-Node

Source Field

VS.UeWithNRadioLinksEstCellsBts.N3RL1Rc2ABts.Max

Source Section

FddCell

UeWithNRadioLinksEstCellsBtsN3RL1Rc2ABtsMin

Distribution of the number of mobiles having N Radio-Links in their Active Set (N3RL1Rc2ABtsMin)

Data Source

RNC C-Node

Source Field

VS.UeWithNRadioLinksEstCellsBts.N3RL1Rc2ABts.Min

Source Section

FddCell

UeWithNRadioLinksEstCellsBtsN3RL1Rc2ABtsNbEvt

Distribution of the number of mobiles having N Radio-Links in their Active Set (N3RL1Rc2ABtsNbEvt)

© Copyright IBM Corp. 1999, 2009. All rights reserved.

Data Source

RNC C-Node

Source Field

VS.UeWithNRadioLinksEstCellsBts.N3RL1Rc2ABts.NbEvt

Source Section

FddCell

UeWithNRadioLinksEstCellsBtsN3RL1Rc2SBtsAvg

Distribution of the number of mobiles having N Radio-Links in their Active Set (N3RL1Rc2SBtsAvg)

Data Source

RNC C-Node

Source Field

VS.UeWithNRadioLinksEstCellsBts.N3RL1Rc2SBts.Avg

Source Section

FddCell

UeWithNRadioLinksEstCellsBtsN3RL1Rc2SBtsCum

Distribution of the number of mobiles having N Radio-Links in their Active Set (N3RL1Rc2SBtsCum)

Data Source

RNC C-Node

Source Field

VS.UeWithNRadioLinksEstCellsBts.N3RL1Rc2SBts.Cum

Source Section

FddCell

UeWithNRadioLinksEstCellsBtsN3RL1Rc2SBtsMax

Distribution of the number of mobiles having N Radio-Links in their Active Set (N3RL1Rc2SBtsMax)

Data Source

RNC C-Node

Source Field

VS.UeWithNRadioLinksEstCellsBts.N3RL1Rc2SBts.Max

Source Section

FddCell

UeWithNRadioLinksEstCellsBtsN3RL1Rc2SBtsMin

Distribution of the number of mobiles having N Radio-Links in their Active Set (N3RL1Rc2SBtsMin)

Data Source

RNC C-Node

Source Field

VS.UeWithNRadioLinksEstCellsBts.N3RL1Rc2SBts.Min

Source Section

FddCell

UeWithNRadioLinksEstCellsBtsN3RL1Rc2SBtsNbEvt

Distribution of the number of mobiles having N Radio-Links in their Active Set (N3RL1Rc2SBtsNbEvt)

Data Source

RNC C-Node

Source Field

VS.UeWithNRadioLinksEstCellsBts.N3RL1Rc2SBts.NbEvt

Source Section

FddCell

UeWithNRadioLinksEstCellsBtsN4RL1Rc1SBts2ABtsAvg

Distribution of the number of mobiles having N Radio-Links in their Active Set (N4RL1Rc1SBts2ABtsAvg)

© Copyright IBM Corp. 1999, 2009. All rights reserved.

Data Source

RNC C-Node

Source Field

VS.UeWithNRadioLinksEstCellsBts.N4RL1Rc1SBts2ABts.Avg

Source Section

FddCell

UeWithNRadioLinksEstCellsBtsN4RL1Rc1SBts2ABtsCum

Distribution of the number of mobiles having N Radio-Links in their Active Set (N4RL1Rc1SBts2ABtsCum)

Data Source

RNC C-Node

Source Field

VS.UeWithNRadioLinksEstCellsBts.N4RL1Rc1SBts2ABts.Cum

Source Section

FddCell

UeWithNRadioLinksEstCellsBtsN4RL1Rc1SBts2ABtsMax

Distribution of the number of mobiles having N Radio-Links in their Active Set (N4RL1Rc1SBts2ABtsMax)

Data Source

RNC C-Node

Source Field

VS.UeWithNRadioLinksEstCellsBts.N4RL1Rc1SBts2ABts.Max

Source Section

FddCell

UeWithNRadioLinksEstCellsBtsN4RL1Rc1SBts2ABtsMin

Distribution of the number of mobiles having N Radio-Links in their Active Set (N4RL1Rc1SBts2ABtsMin)

Data Source

RNC C-Node

Source Field

VS.UeWithNRadioLinksEstCellsBts.N4RL1Rc1SBts2ABts.Min

Source Section

FddCell

UeWithNRadioLinksEstCellsBtsN4RL1Rc1SBts2ABtsNbEvt

Distribution of the number of mobiles having N Radio-Links in their Active Set (N4RL1Rc1SBts2ABtsNbEvt)

Data Source

RNC C-Node

Source Field

VS.UeWithNRadioLinksEstCellsBts.N4RL1Rc1SBts2ABts.NbEvt

Source Section

FddCell

UeWithNRadioLinksEstCellsBtsN4RL1Rc2SBts1ABtsAvg

Distribution of the number of mobiles having N Radio-Links in their Active Set (N4RL1Rc2SBts1ABtsAvg)

Data Source

RNC C-Node

Source Field

VS.UeWithNRadioLinksEstCellsBts.N4RL1Rc2SBts1ABts.Avg

Source Section

FddCell

UeWithNRadioLinksEstCellsBtsN4RL1Rc2SBts1ABtsCum

Distribution of the number of mobiles having N Radio-Links in their Active Set (N4RL1Rc2SBts1ABtsCum)

© Copyright IBM Corp. 1999, 2009. All rights reserved.

Data Source

RNC C-Node

Source Field

VS.UeWithNRadioLinksEstCellsBts.N4RL1Rc2SBts1ABts.Cum

Source Section

FddCell

UeWithNRadioLinksEstCellsBtsN4RL1Rc2SBts1ABtsMax

Distribution of the number of mobiles having N Radio-Links in their Active Set (N4RL1Rc2SBts1ABtsMax)

Data Source

RNC C-Node

Source Field

VS.UeWithNRadioLinksEstCellsBts.N4RL1Rc2SBts1ABts.Max

Source Section

FddCell

UeWithNRadioLinksEstCellsBtsN4RL1Rc2SBts1ABtsMin

Distribution of the number of mobiles having N Radio-Links in their Active Set (N4RL1Rc2SBts1ABtsMin)

Data Source

RNC C-Node

Source Field

VS.UeWithNRadioLinksEstCellsBts.N4RL1Rc2SBts1ABts.Min

Source Section

FddCell

UeWithNRadioLinksEstCellsBtsN4RL1Rc2SBts1ABtsNbEvt

Distribution of the number of mobiles having N Radio-Links in their Active Set (N4RL1Rc2SBts1ABtsNbEvt)

Data Source

RNC C-Node

Source Field

VS.UeWithNRadioLinksEstCellsBts.N4RL1Rc2SBts1ABts.NbEvt

Source Section

FddCell

UeWithNRadioLinksEstCellsBtsN4RL1Rc3ABtsAvg

Distribution of the number of mobiles having N Radio-Links in their Active Set (N4RL1Rc3ABtsAvg)

Data Source

RNC C-Node

Source Field

VS.UeWithNRadioLinksEstCellsBts.N4RL1Rc3ABts.Avg

Source Section

FddCell

UeWithNRadioLinksEstCellsBtsN4RL1Rc3ABtsCum

Distribution of the number of mobiles having N Radio-Links in their Active Set (N4RL1Rc3ABtsCum)

Data Source

RNC C-Node

Source Field

VS.UeWithNRadioLinksEstCellsBts.N4RL1Rc3ABts.Cum

Source Section

FddCell

UeWithNRadioLinksEstCellsBtsN4RL1Rc3ABtsMax

Distribution of the number of mobiles having N Radio-Links in their Active Set (N4RL1Rc3ABtsMax)

© Copyright IBM Corp. 1999, 2009. All rights reserved.

Data Source

RNC C-Node

Source Field

VS.UeWithNRadioLinksEstCellsBts.N4RL1Rc3ABts.Max

Source Section

FddCell

UeWithNRadioLinksEstCellsBtsN4RL1Rc3ABtsMin

Distribution of the number of mobiles having N Radio-Links in their Active Set (N4RL1Rc3ABtsMin)

Data Source

RNC C-Node

Source Field

VS.UeWithNRadioLinksEstCellsBts.N4RL1Rc3ABts.Min

Source Section

FddCell

UeWithNRadioLinksEstCellsBtsN4RL1Rc3ABtsNbEvt

Distribution of the number of mobiles having N Radio-Links in their Active Set (N4RL1Rc3ABtsNbEvt)

Data Source

RNC C-Node

Source Field

VS.UeWithNRadioLinksEstCellsBts.N4RL1Rc3ABts.NbEvt

Source Section

FddCell

UeWithNRadioLinksEstCellsBtsN5RL1Rc1SBts3ABtsAvg

Distribution of the number of mobiles having N Radio-Links in their Active Set (N5RL1Rc1SBts3ABtsAvg)

Data Source

RNC C-Node

Source Field

VS.UeWithNRadioLinksEstCellsBts.N5RL1Rc1SBts3ABts.Avg

Source Section

FddCell

UeWithNRadioLinksEstCellsBtsN5RL1Rc1SBts3ABtsCum

Distribution of the number of mobiles having N Radio-Links in their Active Set (N5RL1Rc1SBts3ABtsCum)

Data Source

RNC C-Node

Source Field

VS.UeWithNRadioLinksEstCellsBts.N5RL1Rc1SBts3ABts.Cum

Source Section

FddCell

UeWithNRadioLinksEstCellsBtsN5RL1Rc1SBts3ABtsMax

Distribution of the number of mobiles having N Radio-Links in their Active Set (N5RL1Rc1SBts3ABtsMax)

Data Source

RNC C-Node

Source Field

VS.UeWithNRadioLinksEstCellsBts.N5RL1Rc1SBts3ABts.Max

Source Section

FddCell

UeWithNRadioLinksEstCellsBtsN5RL1Rc1SBts3ABtsMin

Distribution of the number of mobiles having N Radio-Links in their Active Set (N5RL1Rc1SBts3ABtsMin)

© Copyright IBM Corp. 1999, 2009. All rights reserved.

Data Source

RNC C-Node

Source Field

VS.UeWithNRadioLinksEstCellsBts.N5RL1Rc1SBts3ABts.Min

Source Section

FddCell

UeWithNRadioLinksEstCellsBtsN5RL1Rc1SBts3ABtsNbEvt

Distribution of the number of mobiles having N Radio-Links in their Active Set (N5RL1Rc1SBts3ABtsNbEvt)

Data Source

RNC C-Node

Source Field

VS.UeWithNRadioLinksEstCellsBts.N5RL1Rc1SBts3ABts.NbEvt

Source Section

FddCell

UeWithNRadioLinksEstCellsBtsN5RL1Rc2SBts2ABtsAvg

Distribution of the number of mobiles having N Radio-Links in their Active Set (N5RL1Rc2SBts2ABtsAvg)

Data Source

RNC C-Node

Source Field

VS.UeWithNRadioLinksEstCellsBts.N5RL1Rc2SBts2ABts.Avg

Source Section

FddCell

UeWithNRadioLinksEstCellsBtsN5RL1Rc2SBts2ABtsCum

Distribution of the number of mobiles having N Radio-Links in their Active Set (N5RL1Rc2SBts2ABtsCum)

Data Source

RNC C-Node

Source Field

VS.UeWithNRadioLinksEstCellsBts.N5RL1Rc2SBts2ABts.Cum

Source Section

FddCell

UeWithNRadioLinksEstCellsBtsN5RL1Rc2SBts2ABtsMax

Distribution of the number of mobiles having N Radio-Links in their Active Set (N5RL1Rc2SBts2ABtsMax)

Data Source

RNC C-Node

Source Field

VS.UeWithNRadioLinksEstCellsBts.N5RL1Rc2SBts2ABts.Max

Source Section

FddCell

UeWithNRadioLinksEstCellsBtsN5RL1Rc2SBts2ABtsMin

Distribution of the number of mobiles having N Radio-Links in their Active Set (N5RL1Rc2SBts2ABtsMin)

Data Source

RNC C-Node

Source Field

VS.UeWithNRadioLinksEstCellsBts.N5RL1Rc2SBts2ABts.Min

Source Section

FddCell

UeWithNRadioLinksEstCellsBtsN5RL1Rc2SBts2ABtsNbEvt

Distribution of the number of mobiles having N Radio-Links in their Active Set (N5RL1Rc2SBts2ABtsNbEvt)

© Copyright IBM Corp. 1999, 2009. All rights reserved.

Data Source

RNC C-Node

Source Field

VS.UeWithNRadioLinksEstCellsBts.N5RL1Rc2SBts2ABts.NbEvt

Source Section

FddCell

UeWithNRadioLinksEstCellsBtsN5RL1Rc4ABtsAvg

Distribution of the number of mobiles having N Radio-Links in their Active Set (N5RL1Rc4ABtsAvg)

Data Source

RNC C-Node

Source Field

VS.UeWithNRadioLinksEstCellsBts.N5RL1Rc4ABts.Avg

Source Section

FddCell

UeWithNRadioLinksEstCellsBtsN5RL1Rc4ABtsCum

Distribution of the number of mobiles having N Radio-Links in their Active Set (N5RL1Rc4ABtsCum)

Data Source

RNC C-Node

Source Field

VS.UeWithNRadioLinksEstCellsBts.N5RL1Rc4ABts.Cum

Source Section

FddCell

UeWithNRadioLinksEstCellsBtsN5RL1Rc4ABtsMax

Distribution of the number of mobiles having N Radio-Links in their Active Set (N5RL1Rc4ABtsMax)

Data Source

RNC C-Node

Source Field

VS.UeWithNRadioLinksEstCellsBts.N5RL1Rc4ABts.Max

Source Section

FddCell

UeWithNRadioLinksEstCellsBtsN5RL1Rc4ABtsMin

Distribution of the number of mobiles having N Radio-Links in their Active Set (N5RL1Rc4ABtsMin)

Data Source

RNC C-Node

Source Field

VS.UeWithNRadioLinksEstCellsBts.N5RL1Rc4ABts.Min

Source Section

FddCell

UeWithNRadioLinksEstCellsBtsN5RL1Rc4ABtsNbEvt

Distribution of the number of mobiles having N Radio-Links in their Active Set (N5RL1Rc4ABtsNbEvt)

Data Source

RNC C-Node

Source Field

VS.UeWithNRadioLinksEstCellsBts.N5RL1Rc4ABts.NbEvt

Source Section

FddCell

UeWithNRadioLinksEstCellsBtsN6RL1Rc1SBts4ABtsAvg

Distribution of the number of mobiles having N Radio-Links in their Active Set (N6RL1Rc1SBts4ABtsAvg)

© Copyright IBM Corp. 1999, 2009. All rights reserved.

Data Source

RNC C-Node

Source Field

VS.UeWithNRadioLinksEstCellsBts.N6RL1Rc1SBts4ABts.Avg

Source Section

FddCell

UeWithNRadioLinksEstCellsBtsN6RL1Rc1SBts4ABtsCum

Distribution of the number of mobiles having N Radio-Links in their Active Set (N6RL1Rc1SBts4ABtsCum)

Data Source

RNC C-Node

Source Field

VS.UeWithNRadioLinksEstCellsBts.N6RL1Rc1SBts4ABts.Cum

Source Section

FddCell

UeWithNRadioLinksEstCellsBtsN6RL1Rc1SBts4ABtsMax

Distribution of the number of mobiles having N Radio-Links in their Active Set (N6RL1Rc1SBts4ABtsMax)

Data Source

RNC C-Node

Source Field

VS.UeWithNRadioLinksEstCellsBts.N6RL1Rc1SBts4ABts.Max

Source Section

FddCell

UeWithNRadioLinksEstCellsBtsN6RL1Rc1SBts4ABtsMin

Distribution of the number of mobiles having N Radio-Links in their Active Set (N6RL1Rc1SBts4ABtsMin)

Data Source

RNC C-Node

Source Field

VS.UeWithNRadioLinksEstCellsBts.N6RL1Rc1SBts4ABts.Min

Source Section

FddCell

UeWithNRadioLinksEstCellsBtsN6RL1Rc1SBts4ABtsNbEvt

Distribution of the number of mobiles having N Radio-Links in their Active Set (N6RL1Rc1SBts4ABtsNbEvt)

Data Source

RNC C-Node

Source Field

VS.UeWithNRadioLinksEstCellsBts.N6RL1Rc1SBts4ABts.NbEvt

Source Section

FddCell

UeWithNRadioLinksEstCellsBtsN6RL1Rc2SBts3ABtsAvg

Distribution of the number of mobiles having N Radio-Links in their Active Set (N6RL1Rc2SBts3ABtsAvg)

Data Source

RNC C-Node

Source Field

VS.UeWithNRadioLinksEstCellsBts.N6RL1Rc2SBts3ABts.Avg

Source Section

FddCell

UeWithNRadioLinksEstCellsBtsN6RL1Rc2SBts3ABtsCum

Distribution of the number of mobiles having N Radio-Links in their Active Set (N6RL1Rc2SBts3ABtsCum)

© Copyright IBM Corp. 1999, 2009. All rights reserved.

Data Source

RNC C-Node

Source Field

VS.UeWithNRadioLinksEstCellsBts.N6RL1Rc2SBts3ABts.Cum

Source Section

FddCell

UeWithNRadioLinksEstCellsBtsN6RL1Rc2SBts3ABtsMax

Distribution of the number of mobiles having N Radio-Links in their Active Set (N6RL1Rc2SBts3ABtsMax)

Data Source

RNC C-Node

Source Field

VS.UeWithNRadioLinksEstCellsBts.N6RL1Rc2SBts3ABts.Max

Source Section

FddCell

UeWithNRadioLinksEstCellsBtsN6RL1Rc2SBts3ABtsMin

Distribution of the number of mobiles having N Radio-Links in their Active Set (N6RL1Rc2SBts3ABtsMin)

Data Source

RNC C-Node

Source Field

VS.UeWithNRadioLinksEstCellsBts.N6RL1Rc2SBts3ABts.Min

Source Section

FddCell

UeWithNRadioLinksEstCellsBtsN6RL1Rc2SBts3ABtsNbEvt

Distribution of the number of mobiles having N Radio-Links in their Active Set (N6RL1Rc2SBts3ABtsNbEvt)

Data Source

RNC C-Node

Source Field

VS.UeWithNRadioLinksEstCellsBts.N6RL1Rc2SBts3ABts.NbEvt

Source Section

FddCell

UeWithNRadioLinksEstCellsBtsN6RL1Rc5ABtsAvg

Distribution of the number of mobiles having N Radio-Links in their Active Set (N6RL1Rc5ABtsAvg)

Data Source

RNC C-Node

Source Field

VS.UeWithNRadioLinksEstCellsBts.N6RL1Rc5ABts.Avg

Source Section

FddCell

UeWithNRadioLinksEstCellsBtsN6RL1Rc5ABtsCum

Distribution of the number of mobiles having N Radio-Links in their Active Set (N6RL1Rc5ABtsCum)

Data Source

RNC C-Node

Source Field

VS.UeWithNRadioLinksEstCellsBts.N6RL1Rc5ABts.Cum

Source Section

FddCell

UeWithNRadioLinksEstCellsBtsN6RL1Rc5ABtsMax

Distribution of the number of mobiles having N Radio-Links in their Active Set (N6RL1Rc5ABtsMax)

© Copyright IBM Corp. 1999, 2009. All rights reserved.

Data Source

RNC C-Node

Source Field

VS.UeWithNRadioLinksEstCellsBts.N6RL1Rc5ABts.Max

Source Section

FddCell

UeWithNRadioLinksEstCellsBtsN6RL1Rc5ABtsMin

Distribution of the number of mobiles having N Radio-Links in their Active Set (N6RL1Rc5ABtsMin)

Data Source

RNC C-Node

Source Field

VS.UeWithNRadioLinksEstCellsBts.N6RL1Rc5ABts.Min

Source Section

FddCell

UeWithNRadioLinksEstCellsBtsN6RL1Rc5ABtsNbEvt

Distribution of the number of mobiles having N Radio-Links in their Active Set (N6RL1Rc5ABtsNbEvt)

Data Source

RNC C-Node

Source Field

VS.UeWithNRadioLinksEstCellsBts.N6RL1Rc5ABts.NbEvt

Source Section

FddCell

UlAmrWbFrmRtAmrWbRts12p65

Number of UL AMR WB frames by rate (AmrWbRts12p65)

Data Source

RNC C-Node

Source Field

VS.UlAmrWbFrmRt.AmrWbRts12p65

Source Section

FddCell

UlAmrWbFrmRtAmrWbRts6p60

Number of UL AMR WB frames by rate (AmrWbRts6p60)

Data Source

RNC C-Node

Source Field

VS.UlAmrWbFrmRt.AmrWbRts6p60

Source Section

FddCell

UlAmrWbFrmRtAmrWbRts8p85

Number of UL AMR WB frames by rate (AmrWbRts8p85)

Data Source

RNC C-Node

Source Field

VS.UlAmrWbFrmRt.AmrWbRts8p85

Source Section

FddCell

UlAmrWbFrmRtAmrWbRtsSid

Number of UL AMR WB frames by rate (AmrWbRtsSid)

Data Source

RNC C-Node

© Copyright IBM Corp. 1999, 2009. All rights reserved.

Source Field

VS.UlAmrWbFrmRt.AmrWbRtsSid

Source Section

FddCell

UlAsConfIdAvgNbrEstablishedUlAsCnfCsDataAvg

indicates an average of the number of UlAsConfIds established per iRNC, based on time average over collection period (UlAsCnfCsDataAvg)

Data Source

RNC C-Node

Source Field

VS.UlAsConfIdAvgNbrEstablished.UlAsCnfCsData.Avg

Source Section

FddCell

UlAsConfIdAvgNbrEstablishedUlAsCnfCsDataCum

indicates an average of the number of UlAsConfIds established per iRNC, based on time average over collection period (UlAsCnfCsDataCum)

Data Source

RNC C-Node

Source Field

VS.UlAsConfIdAvgNbrEstablished.UlAsCnfCsData.Cum

Source Section

FddCell

UlAsConfIdAvgNbrEstablishedUlAsCnfCsDataMax

indicates an average of the number of UlAsConfIds established per iRNC, based on time average over collection period (UlAsCnfCsDataMax)

Data Source

RNC C-Node

Source Field

VS.UlAsConfIdAvgNbrEstablished.UlAsCnfCsData.Max

Source Section

FddCell

UlAsConfIdAvgNbrEstablishedUlAsCnfCsDataMin

indicates an average of the number of UlAsConfIds established per iRNC, based on time average over collection period (UlAsCnfCsDataMin)

Data Source

RNC C-Node

Source Field

VS.UlAsConfIdAvgNbrEstablished.UlAsCnfCsData.Min

Source Section

FddCell

UlAsConfIdAvgNbrEstablishedUlAsCnfCsDataNbEvt

indicates an average of the number of UlAsConfIds established per iRNC, based on time average over collection period (UlAsCnfCsDataNbEvt)

Data Source

RNC C-Node

Source Field

VS.UlAsConfIdAvgNbrEstablished.UlAsCnfCsData.NbEvt

Source Section

FddCell

UlAsConfIdAvgNbrEstablishedUlAsCnfCsSpeechAvg

indicates an average of the number of UlAsConfIds established per iRNC, based on time average over collection period (UlAsCnfCsSpeechAvg)

Data Source

RNC C-Node

© Copyright IBM Corp. 1999, 2009. All rights reserved.

Source Field

VS.UlAsConfIdAvgNbrEstablished.UlAsCnfCsSpeech.Avg

Source Section

FddCell

UlAsConfIdAvgNbrEstablishedUlAsCnfCsSpeechCum

indicates an average of the number of UlAsConfIds established per iRNC, based on time average over collection period (UlAsCnfCsSpeechCum)

Data Source

RNC C-Node

Source Field

VS.UlAsConfIdAvgNbrEstablished.UlAsCnfCsSpeech.Cum

Source Section

FddCell

UlAsConfIdAvgNbrEstablishedUlAsCnfCsSpeechMax

indicates an average of the number of UlAsConfIds established per iRNC, based on time average over collection period (UlAsCnfCsSpeechMax)

Data Source

RNC C-Node

Source Field

VS.UlAsConfIdAvgNbrEstablished.UlAsCnfCsSpeech.Max

Source Section

FddCell

UlAsConfIdAvgNbrEstablishedUlAsCnfCsSpeechMin

indicates an average of the number of UlAsConfIds established per iRNC, based on time average over collection period (UlAsCnfCsSpeechMin)

Data Source

RNC C-Node

Source Field

VS.UlAsConfIdAvgNbrEstablished.UlAsCnfCsSpeech.Min

Source Section

FddCell

UlAsConfIdAvgNbrEstablishedUlAsCnfCsSpeechNbEvt

indicates an average of the number of UlAsConfIds established per iRNC, based on time average over collection period (UlAsCnfCsSpeechNbEvt)

Data Source

RNC C-Node

Source Field

VS.UlAsConfIdAvgNbrEstablished.UlAsCnfCsSpeech.NbEvt

Source Section

FddCell

UlAsConfIdAvgNbrEstablishedUlAsCnfCsStr14_4Avg

indicates an average of the number of UlAsConfIds established per iRNC, based on time average over collection period (UlAsCnfCsStr14_4Avg)

Data Source

RNC C-Node

Source Field

VS.UlAsConfIdAvgNbrEstablished.UlAsCnfCsStr14_4.Avg

Source Section

FddCell

UlAsConfIdAvgNbrEstablishedUlAsCnfCsStr14_4Cum

indicates an average of the number of UlAsConfIds established per iRNC, based on time average over collection period (UlAsCnfCsStr14_4Cum)

Data Source

RNC C-Node

© Copyright IBM Corp. 1999, 2009. All rights reserved.

Source Field

VS.UlAsConfIdAvgNbrEstablished.UlAsCnfCsStr14_4.Cum

Source Section

FddCell

UlAsConfIdAvgNbrEstablishedUlAsCnfCsStr14_4Max

indicates an average of the number of UlAsConfIds established per iRNC, based on time average over collection period (UlAsCnfCsStr14_4Max)

Data Source

RNC C-Node

Source Field

VS.UlAsConfIdAvgNbrEstablished.UlAsCnfCsStr14_4.Max

Source Section

FddCell

UlAsConfIdAvgNbrEstablishedUlAsCnfCsStr14_4Min

indicates an average of the number of UlAsConfIds established per iRNC, based on time average over collection period (UlAsCnfCsStr14_4Min)

Data Source

RNC C-Node

Source Field

VS.UlAsConfIdAvgNbrEstablished.UlAsCnfCsStr14_4.Min

Source Section

FddCell

UlAsConfIdAvgNbrEstablishedUlAsCnfCsStr14_4NbEvt

indicates an average of the number of UlAsConfIds established per iRNC, based on time average over collection period (UlAsCnfCsStr14_4NbEvt)

Data Source

RNC C-Node

Source Field

VS.UlAsConfIdAvgNbrEstablished.UlAsCnfCsStr14_4.NbEvt

Source Section

FddCell

UlAsConfIdAvgNbrEstablishedUlAsCnfCsStr57_6Avg

indicates an average of the number of UlAsConfIds established per iRNC, based on time average over collection period (UlAsCnfCsStr57_6Avg)

Data Source

RNC C-Node

Source Field

VS.UlAsConfIdAvgNbrEstablished.UlAsCnfCsStr57_6.Avg

Source Section

FddCell

UlAsConfIdAvgNbrEstablishedUlAsCnfCsStr57_6Cum

indicates an average of the number of UlAsConfIds established per iRNC, based on time average over collection period (UlAsCnfCsStr57_6Cum)

Data Source

RNC C-Node

Source Field

VS.UlAsConfIdAvgNbrEstablished.UlAsCnfCsStr57_6.Cum

Source Section

FddCell

UlAsConfIdAvgNbrEstablishedUlAsCnfCsStr57_6Max

indicates an average of the number of UlAsConfIds established per iRNC, based on time average over collection period (UlAsCnfCsStr57_6Max)

Data Source

RNC C-Node

© Copyright IBM Corp. 1999, 2009. All rights reserved.

Source Field

VS.UlAsConfIdAvgNbrEstablished.UlAsCnfCsStr57_6.Max

Source Section

FddCell

UlAsConfIdAvgNbrEstablishedUlAsCnfCsStr57_6Min

indicates an average of the number of UlAsConfIds established per iRNC, based on time average over collection period (UlAsCnfCsStr57_6Min)

Data Source

RNC C-Node

Source Field

VS.UlAsConfIdAvgNbrEstablished.UlAsCnfCsStr57_6.Min

Source Section

FddCell

UlAsConfIdAvgNbrEstablishedUlAsCnfCsStr57_6NbEvt

indicates an average of the number of UlAsConfIds established per iRNC, based on time average over collection period (UlAsCnfCsStr57_6NbEvt)

Data Source

RNC C-Node

Source Field

VS.UlAsConfIdAvgNbrEstablished.UlAsCnfCsStr57_6.NbEvt

Source Section

FddCell

UlAsConfIdAvgNbrEstablishedUlAsCnfHsupaAvg

indicates an average of the number of UlAsConfIds established per iRNC, based on time average over collection period (UlAsCnfHsupaAvg)

Data Source

RNC C-Node

Source Field

VS.UlAsConfIdAvgNbrEstablished.UlAsCnfHsupa.Avg

Source Section

FddCell

UlAsConfIdAvgNbrEstablishedUlAsCnfHsupaCum

indicates an average of the number of UlAsConfIds established per iRNC, based on time average over collection period (UlAsCnfHsupaCum)

Data Source

RNC C-Node

Source Field

VS.UlAsConfIdAvgNbrEstablished.UlAsCnfHsupa.Cum

Source Section

FddCell

UlAsConfIdAvgNbrEstablishedUlAsCnfHsupaMax

indicates an average of the number of UlAsConfIds established per iRNC, based on time average over collection period (UlAsCnfHsupaMax)

Data Source

RNC C-Node

Source Field

VS.UlAsConfIdAvgNbrEstablished.UlAsCnfHsupa.Max

Source Section

FddCell

UlAsConfIdAvgNbrEstablishedUlAsCnfHsupaMin

indicates an average of the number of UlAsConfIds established per iRNC, based on time average over collection period (UlAsCnfHsupaMin)

Data Source

RNC C-Node

© Copyright IBM Corp. 1999, 2009. All rights reserved.

Source Field

VS.UlAsConfIdAvgNbrEstablished.UlAsCnfHsupa.Min

Source Section

FddCell

UlAsConfIdAvgNbrEstablishedUlAsCnfHsupaNbEvt

indicates an average of the number of UlAsConfIds established per iRNC, based on time average over collection period (UlAsCnfHsupaNbEvt)

Data Source

RNC C-Node

Source Field

VS.UlAsConfIdAvgNbrEstablished.UlAsCnfHsupa.NbEvt

Source Section

FddCell

UlAsConfIdAvgNbrEstablishedUlAsCnfotherAvg

indicates an average of the number of UlAsConfIds established per iRNC, based on time average over collection period (UlAsCnfotherAvg)

Data Source

RNC C-Node

Source Field

VS.UlAsConfIdAvgNbrEstablished.UlAsCnfother.Avg

Source Section

FddCell

UlAsConfIdAvgNbrEstablishedUlAsCnfotherCum

indicates an average of the number of UlAsConfIds established per iRNC, based on time average over collection period (UlAsCnfotherCum)

Data Source

RNC C-Node

Source Field

VS.UlAsConfIdAvgNbrEstablished.UlAsCnfother.Cum

Source Section

FddCell

UlAsConfIdAvgNbrEstablishedUlAsCnfotherMax

indicates an average of the number of UlAsConfIds established per iRNC, based on time average over collection period (UlAsCnfotherMax)

Data Source

RNC C-Node

Source Field

VS.UlAsConfIdAvgNbrEstablished.UlAsCnfother.Max

Source Section

FddCell

UlAsConfIdAvgNbrEstablishedUlAsCnfotherMin

indicates an average of the number of UlAsConfIds established per iRNC, based on time average over collection period (UlAsCnfotherMin)

Data Source

RNC C-Node

Source Field

VS.UlAsConfIdAvgNbrEstablished.UlAsCnfother.Min

Source Section

FddCell

UlAsConfIdAvgNbrEstablishedUlAsCnfotherNbEvt

indicates an average of the number of UlAsConfIds established per iRNC, based on time average over collection period (UlAsCnfotherNbEvt)

Data Source

RNC C-Node

© Copyright IBM Corp. 1999, 2009. All rights reserved.

Source Field

VS.UlAsConfIdAvgNbrEstablished.UlAsCnfother.NbEvt

Source Section

FddCell

UlAsConfIdAvgNbrEstablishedUlAsCnfPsIB128Avg

indicates an average of the number of UlAsConfIds established per iRNC, based on time average over collection period (UlAsCnfPsIB128Avg)

Data Source

RNC C-Node

Source Field

VS.UlAsConfIdAvgNbrEstablished.UlAsCnfPsIB128.Avg

Source Section

FddCell

UlAsConfIdAvgNbrEstablishedUlAsCnfPsIB128Cum

indicates an average of the number of UlAsConfIds established per iRNC, based on time average over collection period (UlAsCnfPsIB128Cum)

Data Source

RNC C-Node

Source Field

VS.UlAsConfIdAvgNbrEstablished.UlAsCnfPsIB128.Cum

Source Section

FddCell

UlAsConfIdAvgNbrEstablishedUlAsCnfPsIB128Max

indicates an average of the number of UlAsConfIds established per iRNC, based on time average over collection period (UlAsCnfPsIB128Max)

Data Source

RNC C-Node

Source Field

VS.UlAsConfIdAvgNbrEstablished.UlAsCnfPsIB128.Max

Source Section

FddCell

UlAsConfIdAvgNbrEstablishedUlAsCnfPsIB128Min

indicates an average of the number of UlAsConfIds established per iRNC, based on time average over collection period (UlAsCnfPsIB128Min)

Data Source

RNC C-Node

Source Field

VS.UlAsConfIdAvgNbrEstablished.UlAsCnfPsIB128.Min

Source Section

FddCell

UlAsConfIdAvgNbrEstablishedUlAsCnfPsIB128NbEvt

indicates an average of the number of UlAsConfIds established per iRNC, based on time average over collection period (UlAsCnfPsIB128NbEvt)

Data Source

RNC C-Node

Source Field

VS.UlAsConfIdAvgNbrEstablished.UlAsCnfPsIB128.NbEvt

Source Section

FddCell

UlAsConfIdAvgNbrEstablishedUlAsCnfPsIB16Avg

indicates an average of the number of UlAsConfIds established per iRNC, based on time average over collection period (UlAsCnfPsIB16Avg)

Data Source

RNC C-Node

© Copyright IBM Corp. 1999, 2009. All rights reserved.

Source Field

VS.UlAsConfIdAvgNbrEstablished.UlAsCnfPsIB16.Avg

Source Section

FddCell

UlAsConfIdAvgNbrEstablishedUlAsCnfPsIB16Cum

indicates an average of the number of UlAsConfIds established per iRNC, based on time average over collection period (UlAsCnfPsIB16Cum)

Data Source

RNC C-Node

Source Field

VS.UlAsConfIdAvgNbrEstablished.UlAsCnfPsIB16.Cum

Source Section

FddCell

UlAsConfIdAvgNbrEstablishedUlAsCnfPsIB16Max

indicates an average of the number of UlAsConfIds established per iRNC, based on time average over collection period (UlAsCnfPsIB16Max)

Data Source

RNC C-Node

Source Field

VS.UlAsConfIdAvgNbrEstablished.UlAsCnfPsIB16.Max

Source Section

FddCell

UlAsConfIdAvgNbrEstablishedUlAsCnfPsIB16Min

indicates an average of the number of UlAsConfIds established per iRNC, based on time average over collection period (UlAsCnfPsIB16Min)

Data Source

RNC C-Node

Source Field

VS.UlAsConfIdAvgNbrEstablished.UlAsCnfPsIB16.Min

Source Section

FddCell

UlAsConfIdAvgNbrEstablishedUlAsCnfPsIB16NbEvt

indicates an average of the number of UlAsConfIds established per iRNC, based on time average over collection period (UlAsCnfPsIB16NbEvt)

Data Source

RNC C-Node

Source Field

VS.UlAsConfIdAvgNbrEstablished.UlAsCnfPsIB16.NbEvt

Source Section

FddCell

UlAsConfIdAvgNbrEstablishedUlAsCnfPsIB32Avg

indicates an average of the number of UlAsConfIds established per iRNC, based on time average over collection period (UlAsCnfPsIB32Avg)

Data Source

RNC C-Node

Source Field

VS.UlAsConfIdAvgNbrEstablished.UlAsCnfPsIB32.Avg

Source Section

FddCell

UlAsConfIdAvgNbrEstablishedUlAsCnfPsIB32Cum

indicates an average of the number of UlAsConfIds established per iRNC, based on time average over collection period (UlAsCnfPsIB32Cum)

Data Source

RNC C-Node

© Copyright IBM Corp. 1999, 2009. All rights reserved.

Source Field

VS.UlAsConfIdAvgNbrEstablished.UlAsCnfPsIB32.Cum

Source Section

FddCell

UlAsConfIdAvgNbrEstablishedUlAsCnfPsIB32Max

indicates an average of the number of UlAsConfIds established per iRNC, based on time average over collection period (UlAsCnfPsIB32Max)

Data Source

RNC C-Node

Source Field

VS.UlAsConfIdAvgNbrEstablished.UlAsCnfPsIB32.Max

Source Section

FddCell

UlAsConfIdAvgNbrEstablishedUlAsCnfPsIB32Min

indicates an average of the number of UlAsConfIds established per iRNC, based on time average over collection period (UlAsCnfPsIB32Min)

Data Source

RNC C-Node

Source Field

VS.UlAsConfIdAvgNbrEstablished.UlAsCnfPsIB32.Min

Source Section

FddCell

UlAsConfIdAvgNbrEstablishedUlAsCnfPsIB32NbEvt

indicates an average of the number of UlAsConfIds established per iRNC, based on time average over collection period (UlAsCnfPsIB32NbEvt)

Data Source

RNC C-Node

Source Field

VS.UlAsConfIdAvgNbrEstablished.UlAsCnfPsIB32.NbEvt

Source Section

FddCell

UlAsConfIdAvgNbrEstablishedUlAsCnfPsIB384Avg

indicates an average of the number of UlAsConfIds established per iRNC, based on time average over collection period (UlAsCnfPsIB384Avg)

Data Source

RNC C-Node

Source Field

VS.UlAsConfIdAvgNbrEstablished.UlAsCnfPsIB384.Avg

Source Section

FddCell

UlAsConfIdAvgNbrEstablishedUlAsCnfPsIB384Cum

indicates an average of the number of UlAsConfIds established per iRNC, based on time average over collection period (UlAsCnfPsIB384Cum)

Data Source

RNC C-Node

Source Field

VS.UlAsConfIdAvgNbrEstablished.UlAsCnfPsIB384.Cum

Source Section

FddCell

UlAsConfIdAvgNbrEstablishedUlAsCnfPsIB384Max

indicates an average of the number of UlAsConfIds established per iRNC, based on time average over collection period (UlAsCnfPsIB384Max)

Data Source

RNC C-Node

© Copyright IBM Corp. 1999, 2009. All rights reserved.

Source Field

VS.UlAsConfIdAvgNbrEstablished.UlAsCnfPsIB384.Max

Source Section

FddCell

UlAsConfIdAvgNbrEstablishedUlAsCnfPsIB384Min

indicates an average of the number of UlAsConfIds established per iRNC, based on time average over collection period (UlAsCnfPsIB384Min)

Data Source

RNC C-Node

Source Field

VS.UlAsConfIdAvgNbrEstablished.UlAsCnfPsIB384.Min

Source Section

FddCell

UlAsConfIdAvgNbrEstablishedUlAsCnfPsIB384NbEvt

indicates an average of the number of UlAsConfIds established per iRNC, based on time average over collection period (UlAsCnfPsIB384NbEvt)

Data Source

RNC C-Node

Source Field

VS.UlAsConfIdAvgNbrEstablished.UlAsCnfPsIB384.NbEvt

Source Section

FddCell

UlAsConfIdAvgNbrEstablishedUlAsCnfPsIB64Avg

indicates an average of the number of UlAsConfIds established per iRNC, based on time average over collection period (UlAsCnfPsIB64Avg)

Data Source

RNC C-Node

Source Field

VS.UlAsConfIdAvgNbrEstablished.UlAsCnfPsIB64.Avg

Source Section

FddCell

UlAsConfIdAvgNbrEstablishedUlAsCnfPsIB64Cum

indicates an average of the number of UlAsConfIds established per iRNC, based on time average over collection period (UlAsCnfPsIB64Cum)

Data Source

RNC C-Node

Source Field

VS.UlAsConfIdAvgNbrEstablished.UlAsCnfPsIB64.Cum

Source Section

FddCell

UlAsConfIdAvgNbrEstablishedUlAsCnfPsIB64Max

indicates an average of the number of UlAsConfIds established per iRNC, based on time average over collection period (UlAsCnfPsIB64Max)

Data Source

RNC C-Node

Source Field

VS.UlAsConfIdAvgNbrEstablished.UlAsCnfPsIB64.Max

Source Section

FddCell

UlAsConfIdAvgNbrEstablishedUlAsCnfPsIB64Min

indicates an average of the number of UlAsConfIds established per iRNC, based on time average over collection period (UlAsCnfPsIB64Min)

Data Source

RNC C-Node

© Copyright IBM Corp. 1999, 2009. All rights reserved.

Source Field

VS.UlAsConfIdAvgNbrEstablished.UlAsCnfPsIB64.Min

Source Section

FddCell

UlAsConfIdAvgNbrEstablishedUlAsCnfPsIB64NbEvt

indicates an average of the number of UlAsConfIds established per iRNC, based on time average over collection period (UlAsCnfPsIB64NbEvt)

Data Source

RNC C-Node

Source Field

VS.UlAsConfIdAvgNbrEstablished.UlAsCnfPsIB64.NbEvt

Source Section

FddCell

UlAsConfIdAvgNbrEstablishedUlAsCnfPsIB8Avg

indicates an average of the number of UlAsConfIds established per iRNC, based on time average over collection period (UlAsCnfPsIB8Avg)

Data Source

RNC C-Node

Source Field

VS.UlAsConfIdAvgNbrEstablished.UlAsCnfPsIB8.Avg

Source Section

FddCell

UlAsConfIdAvgNbrEstablishedUlAsCnfPsIB8Cum

indicates an average of the number of UlAsConfIds established per iRNC, based on time average over collection period (UlAsCnfPsIB8Cum)

Data Source

RNC C-Node

Source Field

VS.UlAsConfIdAvgNbrEstablished.UlAsCnfPsIB8.Cum

Source Section

FddCell

UlAsConfIdAvgNbrEstablishedUlAsCnfPsIB8Max

indicates an average of the number of UlAsConfIds established per iRNC, based on time average over collection period (UlAsCnfPsIB8Max)

Data Source

RNC C-Node

Source Field

VS.UlAsConfIdAvgNbrEstablished.UlAsCnfPsIB8.Max

Source Section

FddCell

UlAsConfIdAvgNbrEstablishedUlAsCnfPsIB8Min

indicates an average of the number of UlAsConfIds established per iRNC, based on time average over collection period (UlAsCnfPsIB8Min)

Data Source

RNC C-Node

Source Field

VS.UlAsConfIdAvgNbrEstablished.UlAsCnfPsIB8.Min

Source Section

FddCell

UlAsConfIdAvgNbrEstablishedUlAsCnfPsIB8NbEvt

indicates an average of the number of UlAsConfIds established per iRNC, based on time average over collection period (UlAsCnfPsIB8NbEvt)

Data Source

RNC C-Node

© Copyright IBM Corp. 1999, 2009. All rights reserved.

Source Field

VS.UlAsConfIdAvgNbrEstablished.UlAsCnfPsIB8.NbEvt

Source Section

FddCell

UlAsConfIdAvgNbrEstablishedUlAsCnfPsStr128Avg

indicates an average of the number of UlAsConfIds established per iRNC, based on time average over collection period (UlAsCnfPsStr128Avg)

Data Source

RNC C-Node

Source Field

VS.UlAsConfIdAvgNbrEstablished.UlAsCnfPsStr128.Avg

Source Section

FddCell

UlAsConfIdAvgNbrEstablishedUlAsCnfPsStr128Cum

indicates an average of the number of UlAsConfIds established per iRNC, based on time average over collection period (UlAsCnfPsStr128Cum)

Data Source

RNC C-Node

Source Field

VS.UlAsConfIdAvgNbrEstablished.UlAsCnfPsStr128.Cum

Source Section

FddCell

UlAsConfIdAvgNbrEstablishedUlAsCnfPsStr128Max

indicates an average of the number of UlAsConfIds established per iRNC, based on time average over collection period (UlAsCnfPsStr128Max)

Data Source

RNC C-Node

Source Field

VS.UlAsConfIdAvgNbrEstablished.UlAsCnfPsStr128.Max

Source Section

FddCell

UlAsConfIdAvgNbrEstablishedUlAsCnfPsStr128Min

indicates an average of the number of UlAsConfIds established per iRNC, based on time average over collection period (UlAsCnfPsStr128Min)

Data Source

RNC C-Node

Source Field

VS.UlAsConfIdAvgNbrEstablished.UlAsCnfPsStr128.Min

Source Section

FddCell

UlAsConfIdAvgNbrEstablishedUlAsCnfPsStr128NbEvt

indicates an average of the number of UlAsConfIds established per iRNC, based on time average over collection period (UlAsCnfPsStr128NbEvt)

Data Source

RNC C-Node

Source Field

VS.UlAsConfIdAvgNbrEstablished.UlAsCnfPsStr128.NbEvt

Source Section

FddCell

UlAsConfIdAvgNbrEstablishedUlAsCnfPsStr16Avg

indicates an average of the number of UlAsConfIds established per iRNC, based on time average over collection period (UlAsCnfPsStr16Avg)

Data Source

RNC C-Node

© Copyright IBM Corp. 1999, 2009. All rights reserved.

Source Field

VS.UlAsConfIdAvgNbrEstablished.UlAsCnfPsStr16.Avg

Source Section

FddCell

UlAsConfIdAvgNbrEstablishedUlAsCnfPsStr16Cum

indicates an average of the number of UlAsConfIds established per iRNC, based on time average over collection period (UlAsCnfPsStr16Cum)

Data Source

RNC C-Node

Source Field

VS.UlAsConfIdAvgNbrEstablished.UlAsCnfPsStr16.Cum

Source Section

FddCell

UlAsConfIdAvgNbrEstablishedUlAsCnfPsStr16Max

indicates an average of the number of UlAsConfIds established per iRNC, based on time average over collection period (UlAsCnfPsStr16Max)

Data Source

RNC C-Node

Source Field

VS.UlAsConfIdAvgNbrEstablished.UlAsCnfPsStr16.Max

Source Section

FddCell

UlAsConfIdAvgNbrEstablishedUlAsCnfPsStr16Min

indicates an average of the number of UlAsConfIds established per iRNC, based on time average over collection period (UlAsCnfPsStr16Min)

Data Source

RNC C-Node

Source Field

VS.UlAsConfIdAvgNbrEstablished.UlAsCnfPsStr16.Min

Source Section

FddCell

UlAsConfIdAvgNbrEstablishedUlAsCnfPsStr16NbEvt

indicates an average of the number of UlAsConfIds established per iRNC, based on time average over collection period (UlAsCnfPsStr16NbEvt)

Data Source

RNC C-Node

Source Field

VS.UlAsConfIdAvgNbrEstablished.UlAsCnfPsStr16.NbEvt

Source Section

FddCell

UlAsConfIdAvgNbrEstablishedUlAsCnfPsStr32Avg

indicates an average of the number of UlAsConfIds established per iRNC, based on time average over collection period (UlAsCnfPsStr32Avg)

Data Source

RNC C-Node

Source Field

VS.UlAsConfIdAvgNbrEstablished.UlAsCnfPsStr32.Avg

Source Section

FddCell

UlAsConfIdAvgNbrEstablishedUlAsCnfPsStr32Cum

indicates an average of the number of UlAsConfIds established per iRNC, based on time average over collection period (UlAsCnfPsStr32Cum)

Data Source

RNC C-Node

© Copyright IBM Corp. 1999, 2009. All rights reserved.

Source Field

VS.UlAsConfIdAvgNbrEstablished.UlAsCnfPsStr32.Cum

Source Section

FddCell

UlAsConfIdAvgNbrEstablishedUlAsCnfPsStr32Max

indicates an average of the number of UlAsConfIds established per iRNC, based on time average over collection period (UlAsCnfPsStr32Max)

Data Source

RNC C-Node

Source Field

VS.UlAsConfIdAvgNbrEstablished.UlAsCnfPsStr32.Max

Source Section

FddCell

UlAsConfIdAvgNbrEstablishedUlAsCnfPsStr32Min

indicates an average of the number of UlAsConfIds established per iRNC, based on time average over collection period (UlAsCnfPsStr32Min)

Data Source

RNC C-Node

Source Field

VS.UlAsConfIdAvgNbrEstablished.UlAsCnfPsStr32.Min

Source Section

FddCell

UlAsConfIdAvgNbrEstablishedUlAsCnfPsStr32NbEvt

indicates an average of the number of UlAsConfIds established per iRNC, based on time average over collection period (UlAsCnfPsStr32NbEvt)

Data Source

RNC C-Node

Source Field

VS.UlAsConfIdAvgNbrEstablished.UlAsCnfPsStr32.NbEvt

Source Section

FddCell

UlAsConfIdAvgNbrEstablishedUlAsCnfPsStr64Avg

indicates an average of the number of UlAsConfIds established per iRNC, based on time average over collection period (UlAsCnfPsStr64Avg)

Data Source

RNC C-Node

Source Field

VS.UlAsConfIdAvgNbrEstablished.UlAsCnfPsStr64.Avg

Source Section

FddCell

UlAsConfIdAvgNbrEstablishedUlAsCnfPsStr64Cum

indicates an average of the number of UlAsConfIds established per iRNC, based on time average over collection period (UlAsCnfPsStr64Cum)

Data Source

RNC C-Node

Source Field

VS.UlAsConfIdAvgNbrEstablished.UlAsCnfPsStr64.Cum

Source Section

FddCell

UlAsConfIdAvgNbrEstablishedUlAsCnfPsStr64Max

indicates an average of the number of UlAsConfIds established per iRNC, based on time average over collection period (UlAsCnfPsStr64Max)

Data Source

RNC C-Node

© Copyright IBM Corp. 1999, 2009. All rights reserved.

Source Field

VS.UlAsConfIdAvgNbrEstablished.UlAsCnfPsStr64.Max

Source Section

FddCell

UlAsConfIdAvgNbrEstablishedUlAsCnfPsStr64Min

indicates an average of the number of UlAsConfIds established per iRNC, based on time average over collection period (UlAsCnfPsStr64Min)

Data Source

RNC C-Node

Source Field

VS.UlAsConfIdAvgNbrEstablished.UlAsCnfPsStr64.Min

Source Section

FddCell

UlAsConfIdAvgNbrEstablishedUlAsCnfPsStr64NbEvt

indicates an average of the number of UlAsConfIds established per iRNC, based on time average over collection period (UlAsCnfPsStr64NbEvt)

Data Source

RNC C-Node

Source Field

VS.UlAsConfIdAvgNbrEstablished.UlAsCnfPsStr64.NbEvt

Source Section

FddCell

UlAsConfIdAvgNbrEstablishedUlAsCnfSigAvg

indicates an average of the number of UlAsConfIds established per iRNC, based on time average over collection period (UlAsCnfSigAvg)

Data Source

RNC C-Node

Source Field

VS.UlAsConfIdAvgNbrEstablished.UlAsCnfSig.Avg

Source Section

FddCell

UlAsConfIdAvgNbrEstablishedUlAsCnfSigCum

indicates an average of the number of UlAsConfIds established per iRNC, based on time average over collection period (UlAsCnfSigCum)

Data Source

RNC C-Node

Source Field

VS.UlAsConfIdAvgNbrEstablished.UlAsCnfSig.Cum

Source Section

FddCell

UlAsConfIdAvgNbrEstablishedUlAsCnfSigMax

indicates an average of the number of UlAsConfIds established per iRNC, based on time average over collection period (UlAsCnfSigMax)

Data Source

RNC C-Node

Source Field

VS.UlAsConfIdAvgNbrEstablished.UlAsCnfSig.Max

Source Section

FddCell

UlAsConfIdAvgNbrEstablishedUlAsCnfSigMin

indicates an average of the number of UlAsConfIds established per iRNC, based on time average over collection period (UlAsCnfSigMin)

Data Source

RNC C-Node

© Copyright IBM Corp. 1999, 2009. All rights reserved.

Source Field

VS.UlAsConfIdAvgNbrEstablished.UlAsCnfSig.Min

Source Section

FddCell

UlAsConfIdAvgNbrEstablishedUlAsCnfSigNbEvt

indicates an average of the number of UlAsConfIds established per iRNC, based on time average over collection period (UlAsCnfSigNbEvt)

Data Source

RNC C-Node

Source Field

VS.UlAsConfIdAvgNbrEstablished.UlAsCnfSig.NbEvt

Source Section

FddCell

UlAsConfIdAvgNbrEstablishedUlAsCnfTrbCellRachAvg

indicates an average of the number of UlAsConfIds established per iRNC, based on time average over collection period (UlAsCnfTrbCellRachAvg)

Data Source

RNC C-Node

Source Field

VS.UlAsConfIdAvgNbrEstablished.UlAsCnfTrbCellRach.Avg

Source Section

FddCell

UlAsConfIdAvgNbrEstablishedUlAsCnfTrbCellRachCum

indicates an average of the number of UlAsConfIds established per iRNC, based on time average over collection period (UlAsCnfTrbCellRachCum)

Data Source

RNC C-Node

Source Field

VS.UlAsConfIdAvgNbrEstablished.UlAsCnfTrbCellRach.Cum

Source Section

FddCell

UlAsConfIdAvgNbrEstablishedUlAsCnfTrbCellRachMax

indicates an average of the number of UlAsConfIds established per iRNC, based on time average over collection period (UlAsCnfTrbCellRachMax)

Data Source

RNC C-Node

Source Field

VS.UlAsConfIdAvgNbrEstablished.UlAsCnfTrbCellRach.Max

Source Section

FddCell

UlAsConfIdAvgNbrEstablishedUlAsCnfTrbCellRachMin

indicates an average of the number of UlAsConfIds established per iRNC, based on time average over collection period (UlAsCnfTrbCellRachMin)

Data Source

RNC C-Node

Source Field

VS.UlAsConfIdAvgNbrEstablished.UlAsCnfTrbCellRach.Min

Source Section

FddCell

UlAsConfIdAvgNbrEstablishedUlAsCnfTrbCellRachNbEvt

indicates an average of the number of UlAsConfIds established per iRNC, based on time average over collection period (UlAsCnfTrbCellRachNbEvt)

Data Source

RNC C-Node

© Copyright IBM Corp. 1999, 2009. All rights reserved.

Source Field

VS.UlAsConfIdAvgNbrEstablished.UlAsCnfTrbCellRach.NbEvt

Source Section

FddCell

UnsucDchToEdchTransRABRelease

Number of unsuccessful DCH to E-DCH transitions (RABRelease)

Data Source

RNC C-Node

Source Field

VS.UnsucDchToEdchTrans.RABRelease

Source Section

FddCell

UnsucDchToEdchTransRABSetup

Number of unsuccessful DCH to E-DCH transitions (RABSetup)

Data Source

RNC C-Node

Source Field

VS.UnsucDchToEdchTrans.RABSetup

Source Section

FddCell

UnsucEdchToDchTrans

Number of unsuccessful E-DCH to DCH transition (UnsucEdchToDchTrans)

Data Source

RNC C-Node

Source Field

VS.UnsucEdchToDchTrans

Source Section

FddCell

UnsucHspaToDchFallbackCellDlHsdpaUlDch

Number of calls unsuccessfully fallbacked from HSPA to DCH on RAB assignment, mobility or reconfiguration event. (DlHsdpaUlDch)

Data Source

RNC C-Node

Source Field

VS.UnsucHspaToDchFallbackCell.DlHsdpaUlDch

Source Section

FddCell

UnsucHspaToDchFallbackCellDlHsdpaUlEdch

Number of calls unsuccessfully fallbacked from HSPA to DCH on RAB assignment, mobility or reconfiguration event. (DlHsdpaUlEdch)

Data Source

RNC C-Node

Source Field

VS.UnsucHspaToDchFallbackCell.DlHsdpaUlEdch

Source Section

FddCell

UplinkRssiAvg

Uplink RSSI received from NBAP common measurement per cell (Avg)

Data Source

RNC C-Node

Source Field

VS.UplinkRssi.Avg

© Copyright IBM Corp. 1999, 2009. All rights reserved.

Source Section

FddCell

UplinkRssiCum

Uplink RSSI received from NBAP common measurement per cell (Cum)

Data Source

RNC C-Node

Source Field

VS.UplinkRssi.Cum

Source Section

FddCell

UplinkRssiMax

Uplink RSSI received from NBAP common measurement per cell (Max)

Data Source

RNC C-Node

Source Field

VS.UplinkRssi.Max

Source Section

FddCell

UplinkRssiMin

Uplink RSSI received from NBAP common measurement per cell (Min)

Data Source

RNC C-Node

Source Field

VS.UplinkRssi.Min

Source Section

FddCell

UplinkRssiNbEvt

Uplink RSSI received from NBAP common measurement per cell (NbEvt)

Data Source

RNC C-Node

Source Field

VS.UplinkRssi.NbEvt

Source Section

FddCell

UpsizingSuccessDchHsdpa

Number of successful upsizing from always on step1 for communication which reference cell is on serving RNC. This counter is screened according to the target downlink ASConfId (DchHsdpa)

Data Source

RNC C-Node

Source Field

VS.UpsizingSuccess.DchHsdpa

Source Section

FddCell

UpsizingSuccessDchOther

Number of successful upsizing from always on step1 for communication which reference cell is on serving RNC. This counter is screened according to the target downlink ASConfId (DchOther)

Data Source

RNC C-Node

Source Field

VS.UpsizingSuccess.DchOther

Source Section

FddCell

© Copyright IBM Corp. 1999, 2009. All rights reserved.

UpsizingSuccessDchPsIb128

Number of successful upsizing from always on step1 for communication which reference cell is on serving RNC. This counter is screened according to the target downlink ASConfId (DchPsIb128)

Data Source

RNC C-Node

Source Field

VS.UpsizingSuccess.DchPsIb128

Source Section

FddCell

UpsizingSuccessDchPsIb256

Number of successful upsizing from always on step1 for communication which reference cell is on serving RNC. This counter is screened according to the target downlink ASConfId (DchPsIb256)

Data Source

RNC C-Node

Source Field

VS.UpsizingSuccess.DchPsIb256

Source Section

FddCell

UpsizingSuccessDchPsIb384

Number of successful upsizing from always on step1 for communication which reference cell is on serving RNC. This counter is screened according to the target downlink ASConfId (DchPsIb384)

Data Source

RNC C-Node

Source Field

VS.UpsizingSuccess.DchPsIb384

Source Section

FddCell

UpsizingSuccessDchPsIb64

Number of successful upsizing from always on step1 for communication which reference cell is on serving RNC. This counter is screened according to the target downlink ASConfId (DchPsIb64)

Data Source

RNC C-Node

Source Field

VS.UpsizingSuccess.DchPsIb64

Source Section

FddCell

UpsizingSuccessDchPsIbLt64

Number of successful upsizing from always on step1 for communication which reference cell is on serving RNC. This counter is screened according to the target downlink ASConfId (DchPsIbLt64)

Data Source

RNC C-Node

Source Field

VS.UpsizingSuccess.DchPsIbLt64

Source Section

FddCell

UpsizingUnsuccessDchHsdpa

Number of unsuccessful upsizing from always on step1 for communication which reference cell is on serving RNC. This counter is screened according to the target downlink ASConfId (DchHsdpa)

Data Source

RNC C-Node

© Copyright IBM Corp. 1999, 2009. All rights reserved.

Source Field

VS.UpsizingUnsuccess.DchHsdpa

Source Section

FddCell

UpsizingUnsuccessDchOther

Number of unsuccessful upsizing from always on step1 for communication which reference cell is on serving RNC. This counter is screened according to the target downlink ASConfId (DchOther)

Data Source

RNC C-Node

Source Field

VS.UpsizingUnsuccess.DchOther

Source Section

FddCell

UpsizingUnsuccessDchPsIb128

Number of unsuccessful upsizing from always on step1 for communication which reference cell is on serving RNC. This counter is screened according to the target downlink ASConfId (DchPsIb128)

Data Source

RNC C-Node

Source Field

VS.UpsizingUnsuccess.DchPsIb128

Source Section

FddCell

UpsizingUnsuccessDchPsIb256

Number of unsuccessful upsizing from always on step1 for communication which reference cell is on serving RNC. This counter is screened according to the target downlink ASConfId (DchPsIb256)

Data Source

RNC C-Node

Source Field

VS.UpsizingUnsuccess.DchPsIb256

Source Section

FddCell

UpsizingUnsuccessDchPsIb384

Number of unsuccessful upsizing from always on step1 for communication which reference cell is on serving RNC. This counter is screened according to the target downlink ASConfId (DchPsIb384)

Data Source

RNC C-Node

Source Field

VS.UpsizingUnsuccess.DchPsIb384

Source Section

FddCell

UpsizingUnsuccessDchPsIb64

Number of unsuccessful upsizing from always on step1 for communication which reference cell is on serving RNC. This counter is screened according to the target downlink ASConfId (DchPsIb64)

Data Source

RNC C-Node

Source Field

VS.UpsizingUnsuccess.DchPsIb64

Source Section

FddCell

© Copyright IBM Corp. 1999, 2009. All rights reserved.

UpsizingUnsuccessDchPsIbLt64

Number of unsuccessful upsizing from always on step1 for communication which reference cell is on serving RNC. This counter is screened according to the target downlink ASConfId (DchPsIbLt64)

Data Source

RNC C-Node

Source Field

VS.UpsizingUnsuccess.DchPsIbLt64

Source Section

FddCell

uraList

A list of UTRAN Registration Area, URA (Ref. 3GPP TS 25.331 (clause 10.3.10) [9]), that a UtranCell can belong to

Data Source

OMC-U Bulk CM

Source Field

un:uraList

Source Section

UtranCell

userLabel

A user-friendly (and user assigned) name of the associated object.

Data Source

OMC-U Bulk CM

Source Field

un:userLabel

Source Section

UtranCell

utranCell_IubLink

Fully Distinguished Name of the Iub link object associcated with this UtranCell.

Data Source

OMC-U Bulk CM

Source Field

un:utranCellIubLink

Source Section

UtranCell

UtranInterFreqHardHOAttInterCN

Attempted Outgoing Inter Frequency Hard Handover(UTRAN side) (count) (InterCN)

Data Source

RNC C-Node

Source Field

VS.UtranInterFreqHardHOAtt.InterCN

Source Section

FddCell

UtranInterFreqHardHOAttIntraCN

Attempted Outgoing Inter Frequency Hard Handover(UTRAN side) (count) (IntraCN)

Data Source

RNC C-Node

Source Field

VS.UtranInterFreqHardHOAtt.IntraCN

Source Section

FddCell

UtranInterFreqHardHOFailureInterCN

Unsuccessful Outgoing Inter Frequency Hard Handovers(UTRAN side) (count) (InterCN)

© Copyright IBM Corp. 1999, 2009. All rights reserved.

Data Source

RNC C-Node

Source Field

VS.UtranInterFreqHardHOFailure.InterCN

Source Section

FddCell

UtranInterFreqHardHOFailureIntraCN

Unsuccessful Outgoing Inter Frequency Hard Handovers(UTRAN side) (count) (IntraCN)

Data Source

RNC C-Node

Source Field

VS.UtranInterFreqHardHOFailure.IntraCN

Source Section

FddCell

UtranInterFreqHardHOSuccInterCN

Successful Outgoing Inter Frequency Hard Handovers(UTRAN side) (count) (InterCN)

Data Source

RNC C-Node

Source Field

VS.UtranInterFreqHardHOSucc.InterCN

Source Section

FddCell

UtranInterFreqHardHOSuccIntraCN

Successful Outgoing Inter Frequency Hard Handovers(UTRAN side) (count) (IntraCN)

Data Source

RNC C-Node

Source Field

VS.UtranInterFreqHardHOSucc.IntraCN

Source Section

FddCell

UtranIntraFreqHardHOAttInterCN

Attempted Outgoing Intra Frequency Hard Handover(UTRAN side) (count) (InterCN)

Data Source

RNC C-Node

Source Field

VS.UtranIntraFreqHardHOAtt.InterCN

Source Section

FddCell

UtranIntraFreqHardHOAttIntraCN

Attempted Outgoing Intra Frequency Hard Handover(UTRAN side) (count) (IntraCN)

Data Source

RNC C-Node

Source Field

VS.UtranIntraFreqHardHOAtt.IntraCN

Source Section

FddCell

UtranIntraFreqHardHOFailureInterCN

Unsuccessful Outgoing Intra Frequency Hard Handovers(UTRAN side) (count) (InterCN)

Data Source

RNC C-Node

Source Field

VS.UtranIntraFreqHardHOFailure.InterCN

© Copyright IBM Corp. 1999, 2009. All rights reserved.

Source Section

FddCell

UtranIntraFreqHardHOFailureIntraCN

Unsuccessful Outgoing Intra Frequency Hard Handovers(UTRAN side) (count) (IntraCN)

Data Source

RNC C-Node

Source Field

VS.UtranIntraFreqHardHOFailure.IntraCN

Source Section

FddCell

UtranIntraFreqHardHOSuccInterCN

Successful Outgoing Intra Frequency Hard Handovers(UTRAN side) (count) (InterCN)

Data Source

RNC C-Node

Source Field

VS.UtranIntraFreqHardHOSucc.InterCN

Source Section

FddCell

UtranIntraFreqHardHOSuccIntraCN

Successful Outgoing Intra Frequency Hard Handovers(UTRAN side) (count) (IntraCN)

Data Source

RNC C-Node

Source Field

VS.UtranIntraFreqHardHOSucc.IntraCN

Source Section

FddCell

UtranPagingRecSentOnPcchCellPch

Number of UTRAN initiated pagings type 1 sent on the PCCH of the cell (CellPch)

Data Source

RNC C-Node

Source Field

VS.UtranPagingRecSentOnPcch.CellPch

Source Section

FddCell

UtranPagingRecSentOnPcchUraPch

Number of UTRAN initiated pagings type 1 sent on the PCCH of the cell (UraPch)

Data Source

RNC C-Node

Source Field

VS.UtranPagingRecSentOnPcch.UraPch

Source Section

FddCell

UtranSideDelHOAttSofterHORLDel

Number of attempted Soft Handover or Softer Handover radio link deletions counted against the reference cell from a UTRAN point of view. (SofterHORLDel)

Data Source

RNC C-Node

Source Field

VS.UtranSideDelHOAtt.SofterHORLDel

Source Section

FddCell

© Copyright IBM Corp. 1999, 2009. All rights reserved.

UtranSideDelHOAttSoftHORLDel

Number of attempted Soft Handover or Softer Handover radio link deletions counted against the reference cell from a UTRAN point of view. (SoftHORLDel)

Data Source

RNC C-Node

Source Field

VS.UtranSideDelHOAtt.SoftHORLDel

Source Section

FddCell

UtranSideDelHOSuccSofterHORLDel

Number of successful Soft Handover or Softer Handover radio link deletions counted against the reference cell from a UTRAN point of view. (SofterHORLDel)

Data Source

RNC C-Node

Source Field

VS.UtranSideDelHOSucc.SofterHORLDel

Source Section

FddCell

UtranSideDelHOSuccSoftHORLDel

Number of successful Soft Handover or Softer Handover radio link deletions counted against the reference cell from a UTRAN point of view. (SoftHORLDel)

Data Source

RNC C-Node

Source Field

VS.UtranSideDelHOSucc.SoftHORLDel

Source Section

FddCell

UtranSideIurDelSoftHOAttInterCNDelAtt

Number of attempted Soft Handover radio link deletions on IUR counted against the reference cell from a UTRAN point of view. (InterCNDelAtt)

Data Source

RNC C-Node

Source Field

VS.UtranSideIurDelSoftHOAtt.InterCNDelAtt

Source Section

FddCell

UtranSideIurDelSoftHOAttIntraCNDelAtt

Number of attempted Soft Handover radio link deletions on IUR counted against the reference cell from a UTRAN point of view. (IntraCNDelAtt)

Data Source

RNC C-Node

Source Field

VS.UtranSideIurDelSoftHOAtt.IntraCNDelAtt

Source Section

FddCell

UtranSideIurDelSoftHOSuccInterCNDelSucc

Number of successful Soft Handover radio link deletions on IUR counted against the reference cell from a UTRAN point of view. (InterCNDelSucc)

Data Source

RNC C-Node

Source Field

VS.UtranSideIurDelSoftHOSucc.InterCNDelSucc

Source Section

FddCell

© Copyright IBM Corp. 1999, 2009. All rights reserved.

UtranSideIurDelSoftHOSuccIntraCNDelSucc

Number of successful Soft Handover radio link deletions on IUR counted against the reference cell from a UTRAN point of view. (IntraCNDelSucc)

Data Source

RNC C-Node

Source Field

VS.UtranSideIurDelSoftHOSucc.IntraCNDelSucc

Source Section

FddCell

UtranSideIurSoftHOAttInterCNAtt

Number of attempted Soft Handovers on IUR counted against the reference cell from a UTRAN point of view. (InterCNAtt)

Data Source

RNC C-Node

Source Field

VS.UtranSideIurSoftHOAtt.InterCNAtt

Source Section

FddCell

UtranSideIurSoftHOAttIntraCNAtt

Number of attempted Soft Handovers on IUR counted against the reference cell from a UTRAN point of view. (IntraCNAtt)

Data Source

RNC C-Node

Source Field

VS.UtranSideIurSoftHOAtt.IntraCNAtt

Source Section

FddCell

UtranSideIurSoftHOSuccInterCNSucc

Number of successful Soft Handovers on IUR counted against the reference cell from a UTRAN point of view. (InterCNSucc)

Data Source

RNC C-Node

Source Field

VS.UtranSideIurSoftHOSucc.InterCNSucc

Source Section

FddCell

UtranSideIurSoftHOSuccIntraCNSucc

Number of successful Soft Handovers on IUR counted against the reference cell from a UTRAN point of view. (IntraCNSucc)

Data Source

RNC C-Node

Source Field

VS.UtranSideIurSoftHOSucc.IntraCNSucc

Source Section

FddCell

UtranSideIurSoftHOUnsuccInterCNAddFail

Number of failed Soft Handover on IUR counted against the reference cell from a UTRAN point of view. (InterCNAddFail)

Data Source

RNC C-Node

Source Field

VS.UtranSideIurSoftHOUnsucc.InterCNAddFail

Source Section

FddCell

© Copyright IBM Corp. 1999, 2009. All rights reserved.

UtranSideIurSoftHOUnsuccIntraCNAddFail

Number of failed Soft Handover on IUR counted against the reference cell from a UTRAN point of view. (IntraCNAddFail)

Data Source

RNC C-Node

Source Field

VS.UtranSideIurSoftHOUnsucc.IntraCNAddFail

Source Section

FddCell

UtranSideSofterHOAtt

Number of attempted Softer Handovers counted against the reference cell from a UTRAN point of view. (UtranSideSofterHOAtt)

Data Source

RNC C-Node

Source Field

VS.UtranSideSofterHOAtt

Source Section

FddCell

UtranSideSofterHOSucc

Number of successful Softer Handovers counted against the reference cell from an UTRAN point of view. (UtranSideSofterHOSucc)

Data Source

RNC C-Node

Source Field

VS.UtranSideSofterHOSucc

Source Section

FddCell

UtranSideSofterHOUnsucc

Number of failed Softer Handovers counted against the reference cell from a UTRAN point of view. (UtranSideSofterHOUnsucc)

Data Source

RNC C-Node

Source Field

VS.UtranSideSofterHOUnsucc

Source Section

FddCell

UtranSideSoftHOAtt

Number of attempted Soft Handovers counted against the reference cell from a UTRAN point of view. (UtranSideSoftHOAtt)

Data Source

RNC C-Node

Source Field

VS.UtranSideSoftHOAtt

Source Section

FddCell

UtranSideSoftHOSucc

Number of successful Soft Handovers counted against the reference cell from a UTRAN point of view. (UtranSideSoftHOSucc)

Data Source

RNC C-Node

Source Field

VS.UtranSideSoftHOSucc

Source Section

FddCell

© Copyright IBM Corp. 1999, 2009. All rights reserved.

UtranSideSoftHOUnsucc

Number of failed Soft Handovers counted against the reference cell from a UTRAN point of view. (UtranSideSoftHOUnsucc)

Data Source

RNC C-Node

Source Field

VS.UtranSideSoftHOUnsucc

Source Section

FddCell

WithoutIurIncomingHardHoAttemptDirectedRetry

Number of attempted incoming intra UMTS (inter- and intra-PLMN) relocations. (DirectedRetry)

Data Source

RNC C-Node

Source Field

VS.WithoutIurIncomingHardHoAttempt.DirectedRetry

Source Section

FddCell

WithoutIurIncomingHardHoAttemptRelocationDesireableForRadioReasons

Number of attempted incoming intra UMTS (inter- and intra-PLMN) relocations. (RelocationDesireableForRadioReasons)

Data Source

RNC C-Node

Source Field

VS.WithoutIurIncomingHardHoAttempt.RelocationDesireableForRadioReasons

Source Section

FddCell

WithoutIurIncomingHardHoAttemptTimeCriticalRelocation

Number of attempted incoming intra UMTS (inter- and intra-PLMN) relocations. (TimeCriticalRelocation)

Data Source

RNC C-Node

Source Field

VS.WithoutIurIncomingHardHoAttempt.TimeCriticalRelocation

Source Section

FddCell

WithoutIurIncomingHardHoAttemptUnexpectedCause

Number of attempted incoming intra UMTS (inter- and intra-PLMN) relocations. (UnexpectedCause)

Data Source

RNC C-Node

Source Field

VS.WithoutIurIncomingHardHoAttempt.UnexpectedCause

Source Section

FddCell

WithoutIurIncomingHardHoFailureFailureInRelocationProcedures

Number of failed incoming intra UMTS (inter- and intra-PLMN) relocations. (FailureInRelocationProcedures)

Data Source

RNC C-Node

Source Field

VS.WithoutIurIncomingHardHoFailure.FailureInRelocationProcedures

Source Section

FddCell

© Copyright IBM Corp. 1999, 2009. All rights reserved.

WithoutIurIncomingHardHoFailureFailureInRncProcedures

Number of failed incoming intra UMTS (inter- and intra-PLMN) relocations. (FailureInRncProcedures)

Data Source

RNC C-Node

Source Field

VS.WithoutIurIncomingHardHoFailure.FailureInRncProcedures

Source Section

FddCell

WithoutIurIncomingHardHoFailureFailureInSecurityProcedures

Number of failed incoming intra UMTS (inter- and intra-PLMN) relocations. (FailureInSecurityProcedures)

Data Source

RNC C-Node

Source Field

VS.WithoutIurIncomingHardHoFailure.FailureInSecurityProcedures

Source Section

FddCell

WithoutIurIncomingHardHoFailureUnexpectedCause

Number of failed incoming intra UMTS (inter- and intra-PLMN) relocations. (UnexpectedCause)

Data Source

RNC C-Node

Source Field

VS.WithoutIurIncomingHardHoFailure.UnexpectedCause

Source Section

FddCell

WithoutIurIncomingHardHoSuccessDirectedRetry

Number of successful incoming intra UMTS (inter- and intra-PLMN) relocations (DirectedRetry)

Data Source

RNC C-Node

Source Field

VS.WithoutIurIncomingHardHoSuccess.DirectedRetry

Source Section

FddCell

WithoutIurIncomingHardHoSuccessRelocationDesireableForRadioReasons

Number of successful incoming intra UMTS (inter- and intra-PLMN) relocations (RelocationDesireableForRadioReasons)

Data Source

RNC C-Node

Source Field

VS.WithoutIurIncomingHardHoSuccess.RelocationDesireableForRadioReasons

Source Section

FddCell

WithoutIurIncomingHardHoSuccessTimeCriticalRelocation

Number of successful incoming intra UMTS (inter- and intra-PLMN) relocations (TimeCriticalRelocation)

Data Source

RNC C-Node

Source Field

VS.WithoutIurIncomingHardHoSuccess.TimeCriticalRelocation

Source Section

FddCell

© Copyright IBM Corp. 1999, 2009. All rights reserved.

WithoutIurIncomingHardHoSuccessUnexpectedCause

Number of successful incoming intra UMTS (inter- and intra-PLMN) relocations (UnexpectedCause)

Data Source

RNC C-Node

Source Field

VS.WithoutIurIncomingHardHoSuccess.UnexpectedCause

Source Section

FddCell

VCC Primitive Calculations

The following is a list of primitive calculations for the VCC entity.

GRAPHmultiLineSeparator

Special Control Field for Multi-Line Graphs

Calculation

```
""
```

NUMDAYS

of days in Report

Calculation

```
DAYSINREPORT()
```

NUMHOURS

of hours in Summation Data

Calculation

VCC Peg Counts

The following is a list of peg counts for the VCC entity.

AcVccEgressCellCountClp0

This Attribute contains the number of high priority cells (with CLP=0) transmitted on the link during the accounting interval.

Data Source

RNC Interface Node Observations

Source Field

VS.AcVccEgressCellCountClp0

Source Section

VCC

AcVccEgressCellCountClp01

This Attribute indicates the total number of cells (with CLP=0 or CLP=1) transmitted on the link during the accounting interval.

Data Source

RNC Interface Node Observations

Source Field

VS.AcVccEgressCellCountClp01

Source Section

VCC

AcVccEgressDiscardedClp0

This Attribute indicates the number of high priority cells or frames (with CLP=0) received from the switch and discarded (not transmitted on the link) during the accounting interval. For consistency with other operational measurements for various applications, the count is expressed either as number of cells or as number of frames. For applications: Loop, CES, Wireless, PVG, and ABS, the count is expressed in cells. For applications: FrAtm, PORS, ATMMPE, and control channels for SVCs, the count is expressed in frames. For applications: Test, SVCs, SVPs, and MPLS, the count is expressed in cells unless AAL5 is used. When AAL5 is used, the count is expressed in frames.

Data Source

RNC Interface Node Observations

© Copyright IBM Corp. 1999, 2009. All rights reserved.

Source Field

VS.AcVccEgressDiscardedClp0

Source Section

VCC

AcVccEgressDiscardedClp01

This Attribute indicates the total number of cells or frames (with CLP=0 or CLP=1) received from the switch and discarded (not transmitted on the link) during the accounting interval. For consistency with other operational measurements for various applications, the count is expressed either as number of cells or as number of frames. For applications: Loop, CES, Wireless, PVG, and ABS, the count is expressed in cells. For applications: FrAtm, PORS, ATMMPE, and control channels for SVCs, the count is expressed in frames. For applications: Test, SVCs, SVPs, and MPLS, the count is expressed in cells unless AAL5 is used. When AAL5 is used, the count is expressed in frames.

Data Source

RNC Interface Node Observations

Source Field

VS.AcVccEgressDiscardedClp01

Source Section

VCC

AcVccIngressCellCountClp0

This Attribute contains the number of high priority cells (with CLP=0) received from the link during the accounting interval.

Data Source

RNC Interface Node Observations

Source Field

VS.AcVccIngressCellCountClp0

Source Section

VCC

AcVccIngressCellCountClp01

This Attribute indicates the total number of cells (with CLP=0 or CLP=1) received from the link during the accounting interval.

Data Source

RNC Interface Node Observations

Source Field

VS.AcVccIngressCellCountClp01

Source Section

VCC

AcVccIngressDiscardedClp0

This Attribute indicates the number of high priority cells or frames (with CLP=0) received from the link and discarded (not transmitted to the switch) during the accounting interval. For consistency with other operational measurements for various applications, the count is expressed either as number of cells or as number of frames. For applications: Loop, CES, Wireless, PVG, and ABS, the count is expressed in cells. For applications: FrAtm, PORS, ATMMPE, and control channels for SVCs, the count is expressed in frames. For applications: Test, SVCs, SVPs, and MPLS, the count is expressed in cells unless AAL5 is used. When AAL5 is used, the count is expressed in frames.

Data Source

RNC Interface Node Observations

Source Field

VS.AcVccIngressDiscardedClp0

Source Section

VCC

AcVccIngressDiscardedClp01

This Attribute indicates the total number of cells or frames (with CLP=0 or CLP=1) received from the link and discarded (not transmitted to the switch) during the accounting interval. For consistency with other operational measurements for various applications, the count is expressed either as number of cells or as number of frames. For applications: Loop, CES, Wireless, PVG, and ABS, the count is expressed in cells. For applications: FrAtm, PORS, ATMMPE, and control channels for SVCs, the count is expressed in frames. For applications: Test, SVCs, SVPs, and MPLS, the count is expressed in cells unless AAL5 is used. When AAL5 is used, the count is expressed in frames.

© Copyright IBM Corp. 1999, 2009. All rights reserved.

Data Source

RNC Interface Node Observations

Source Field

VS.AcVccIngressDiscardedClp01

Source Section

VCC

© Copyright IBM Corp. 1999, 2009. All rights reserved.

7 SGSN Traffic Entities

The following figure shows the Prospect reporting hierarchy for SGSN traffic entities.

Figure 5: Reporting Hierarchy

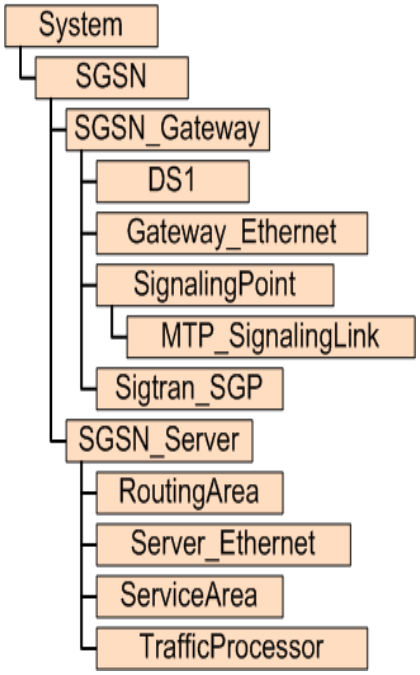

© Copyright IBM Corp. 1999, 2009. All rights reserved.

8 SGSN Traffic Fields

The following is a list of available SGSN Traffic performance data fields.

DS1 Primitive Calculations

The following is a list of primitive calculations for the DS1 entity.

GRAPHmultiLineSeparator

Special Control Field for Multi-Line Graphs

Calculation

```
""
```

NUMDAYS

of days in Report

Calculation

```
DAYSINREPORT()
```

NUMHOURS

of hours in Summation Data

Calculation

DS1 Peg Counts

The following is a list of peg counts for the DS1 entity.

Data_interval

Data interval for the SGSN data collection in seconds. It is taken from the relevant <gp> tag in the SGSN XML data file.

Data Source

SGSN_Gateway

Source Field

<gp> tag value

Source Section

Ds1Interval

dsx1IntervalBESs

Bursty Errored Seconds

Data Source

SGSN_Gateway

Source Field

dsx1IntervalBESs

Source Section

Ds1Interval

dsx1IntervalCSSs

Controlled Slip Seconds

Data Source

SGSN_Gateway

Source Field

dsx1IntervalCSSs

Source Section

Ds1Interval

dsx1IntervalDMs

Number of Degraded Minutes

Data Source

SGSN_Gateway

Source Field

dsx1IntervalDMs

Source Section

Ds1Interval

dsx1IntervalESs

Errored Seconds

Data Source

SGSN_Gateway

Source Field

dsx1IntervalESs

Source Section

Ds1Interval

dsx1IntervalIndex

DS1 Interval Table index

Data Source

SGSN_Gateway

Source Field

dsx1IntervalIndex

Source Section

Ds1Interval

dsx1IntervalLCVs

Line Code Violations

Data Source

SGSN_Gateway

Source Field

dsx1IntervalLCVs

Source Section

Ds1Interval

dsx1IntervalLESs

Line Errored Seconds

Data Source

SGSN_Gateway

Source Field

dsx1IntervalLESs

Source Section

Ds1Interval

dsx1IntervalNumber

DS1 interval Table entry number

Data Source

SGSN_Gateway

Source Field

dsx1IntervalNumber

Source Section

Ds1Interval

dsx1IntervalPCVs

Path Coding Violations

Data Source

SGSN_Gateway

Source Field

dsx1IntervalPCVs

Source Section

Ds1Interval

dsx1IntervalSEFSs

Severly Errored Framing Seconds

Data Source

SGSN_Gateway

Source Field

dsx1IntervalSEFSs

Source Section

Ds1Interval

dsx1IntervalSESs

Severly Errored Seconds

Data Source

SGSN_Gateway

Source Field

dsx1IntervalSESs

Source Section

Ds1Interval

dsx1IntervalUASs

Unavailable Seconds

Data Source

SGSN_Gateway

Source Field

dsx1IntervalUASs

Source Section

Ds1Interval

Gateway_Ethernet Primitive Calculations

The following is a list of primitive calculations for the Gateway_Ethernet entity.

GRAPHmultiLineSeparator

Special Control Field for Multi-Line Graphs

Calculation

```
""
```

NUMDAYS

of days in Report

Calculation

```
DAYSINREPORT()
```

NUMHOURS

of hours in Summation Data

Calculation

Gateway_Ethernet Peg Counts

The following is a list of peg counts for the Gateway_Ethernet entity.

Data_interval

Data interval for the SGSN data collection in seconds. It is taken from the relevant <gp> tag in the SGSN XML data file.

Data Source

SGSN_Gateway

Source Field

<gp> tag value

Source Section

EtherInterfaceData

ifHCInOctets

HC incoming octets

Data Source

SGSN_Gateway

Source Field

ifHCInOctets

Source Section

EtherInterfaceData

ifHCOutOctets

HC outgoing octets

Data Source

SGSN_Gateway

Source Field

ifHCOutOctets

Source Section

EtherInterfaceData

ifInBroadcastPkts

The number of packets, delivered by this sub-layer to a higher (sub-)layer, which were addressed to a broadcast address at this sub-layer

Data Source

SGSN_Gateway

Source Field

ifInBroadcastPkts

Source Section

EtherInterfaceData

ifIndex

Interface index

Data Source

SGSN_Gateway

Source Field

ifIndex

Source Section

EtherInterfaceData

ifInDiscards

The number of inbound packets which were chosen to be discarded even though no errors had been detected to prevent their being deliverable to a higher-layer protocol.

Data Source

SGSN_Gateway

Source Field

ifInDiscards

Source Section

EtherInterfaceData

ifInErrors

The number of inbound packets that contained errors preventing them from being deliverable to a higher-layer protocol.

Data Source

SGSN_Gateway

Source Field

ifInErrors

Source Section

EtherInterfaceData

ifInMulticastPkts

The number of packets, delivered by this sub-layer to a higher (sub-)layer, which were addressed to a multicast address at this sub-layer. For a MAC layer protocol, this includes both Group and Functional addresses

Data Source

SGSN_Gateway

Source Field

ifInMulticastPkts

Source Section

EtherInterfaceData

ifInOctets

The total number of octets received on the interface, including framing characters

Data Source

SGSN_Gateway

Source Field

ifInOctets

Source Section

EtherInterfaceData

ifInUcastPkts

The number of packets, delivered by this sub-layer to a higher (sub-)layer, which were not addressed to a multicast or broadcast address at this sub-layer

Data Source

SGSN_Gateway

Source Field

ifInUcastPkts

Source Section

EtherInterfaceData

ifInUnknownProtos

The number of packets received via the interface which were discarded because of an unknown or unsupported protocol.

Data Source

SGSN_Gateway

Source Field

ifInUnknownProtos

Source Section

EtherInterfaceData

ifOutBroadcastPkts

The total number of packets that higher-level protocols requested be transmitted, and which were addressed to a broadcast address at this sub-layer, including those that were discarded or not sent

Data Source

SGSN_Gateway

Source Field

ifOutBroadcastPkts

Source Section

EtherInterfaceData

ifOutDiscards

The number of outbound packets which were chosen to be discarded even though no errors had been detected to prevent their being transmitted.

Data Source

SGSN_Gateway

Source Field

ifOutDiscards

Source Section

EtherInterfaceData

ifOutErrors

The number of outbound packets that could not be transmitted because of errors.

Data Source

SGSN_Gateway

Source Field

ifOutErrors

Source Section

EtherInterfaceData

ifOutMulticastPkts

The total number of packets that higher-level protocols requested be transmitted, and which were addressed to a multicast address at this sub-layer, including those that were discarded or not sent.

Data Source

SGSN_Gateway

Source Field

ifOutMulticastPkts

Source Section

EtherInterfaceData

ifOutOctets

The total number of octets transmitted out of the interface, including framing characters

Data Source

SGSN_Gateway

Source Field

ifOutOctets

Source Section

EtherInterfaceData

ifOutUcastPkts

The total number of packets that higher-level protocols requested be transmitted, and which were not addressed to a multicast or broadcast address at this sub-layer, including those that were discarded or not sent.

Data Source

SGSN_Gateway

Source Field

ifOutUcastPkts

Source Section

EtherInterfaceData

MTP_SignalingLink Primitive Calculations

The following is a list of primitive calculations for the MTP_SignalingLink entity.

GRAPHmultiLineSeparator

Special Control Field for Multi-Line Graphs

Calculation

```
""
```

NUMDAYS

of days in Report

Calculation

```
DAYSINREPORT()
```

NUMHOURS

of hours in Summation Data

Calculation

MTP_SignalingLink Peg Counts

The following is a list of peg counts for the MTP_SignalingLink entity.

adjPointCode

Adjacent Point Code

Data Source

SGSN_Gateway

Source Field

adjPointCode

Source Section

MtpSignLink

Data_interval

Data interval for the SGSN data collection in seconds. It is taken from the relevant <gp> tag in the SGSN XML data file.

Data Source

SGSN_Gateway

Source Field

<gp> tag value

Source Section

MtpSignLink

discardedMSUsCongestion

Number of congestion events resulting in loss of MSU's

Data Source

SGSN_Gateway

Source Field

discardedMSUsCongestion

Source Section

MtpSignLink

ifIndex

Interface index

Data Source

SGSN_Gateway

Source Field

ifIndex

Source Section

MtpSignLink

localPointCode

Local Point Code

Data Source

SGSN_Gateway

Source Field

localPointCode

Source Section

MtpSignLink

receivedOctetsSIFSIO

Number of SIF and SIO octets received

Data Source

SGSN_Gateway

Source Field

receivedOctetsSIFSIO

Source Section

MtpSignLink

signPointId

Signaling Point ID

Data Source

SGSN_Gateway

Source Field

signPointId

Source Section

MtpSignLink

signUnitsReceivedInError

Number of Signaling units received in error

Data Source

SGSN_Gateway

Source Field

signUnitsReceivedInError

Source Section

MtpSignLink

slCode

Signaling Link Code

Data Source

SGSN_Gateway

Source Field

slCode

Source Section

MtpSignLink

slFailureAllReasons

Signaling Link Failure - All reasons

Data Source

SGSN_Gateway

Source Field

slFailureAllReasons

Source Section

MtpSignLink

slInserviceDuration

Duration of link in the In-service State

Data Source

SGSN_Gateway

Source Field

slInserviceDuration

Source Section

MtpSignLink

slRecAverageLinkUsage

Average 56Kbps SS7 link utilization percentage for receiving direction for the Gr interface between SGSN and HLR.

Data Source

SGSN_Gateway

Source Field

slRecAverageLinkUsage

Source Section

MtpSignLink

slTxAverageLinkUsage

Average 56Kbps SS7 link utilization percentage for transmitting direction for the Gr interface between SGSN and HLR.

Data Source

SGSN_Gateway

Source Field

slTxAverageLinkUsage

Source Section

MtpSignLink

slUnavailabilityDuration

Duration of SL unavailability

Data Source

SGSN_Gateway

Source Field

slUnavailabilityDuration

Source Section

MtpSignLink

transmittedOctetsSIFSIO

Number of SIF and SIO octets transmitted

Data Source

SGSN_Gateway

Source Field

transmittedOctetsSIFSIO

Source Section

MtpSignLink

RoutingArea Primitive Calculations

The following is a list of primitive calculations for the RoutingArea entity.

GRAPHmultiLineSeparator

Special Control Field for Multi-Line Graphs

Calculation

```
""
```

NUMDAYS

of days in Report

Calculation

```
DAYSINREPORT()
```

NUMHOURS

of hours in Summation Data

Calculation

SGSN_initiated_PS_paging_per_RA_failure_rate

This indicator calculates the failure rate of SGSN performed packet switched paging per routing area.

Calculation

```
unsuccPsPagingPerRoutingArea * 100.0 / attPsPagingPerRoutingArea
```

SGSN_initiated_PS_paging_per_RA_success_rate

This indicator calculates the success rate of SGSN performed packet switched paging per routing area.

Calculation

```
vsum (attPsPagingPerRoutingArea, -1.0 * unsuccPsPagingPerRoutingArea, 0) *
100.0 / attPsPagingPerRoutingArea
```

RoutingArea Peg Counts

The following is a list of peg counts for the RoutingArea entity.

attachAuthCipherFail

The number of Attach failures due to other (not synchronization or MAC code failure) Authentication/Ciphering failures encountered during processing an Attach Request message from mobile.

Data Source

SGSN_Server

Source Field

attachAuthCipherFail

Source Section

RASuccessFail

attachAuthMACcodeFail

The number of Attach failures due to Authentication/Ciphering MAC code failure encountered during processing an Attach Request message from mobile.

Data Source

SGSN_Server

Source Field

attachAuthMACcodeFail

Source Section

RASuccessFail

attachAuthSynchFail

The number of Attach failures due to Authentication/Ciphering synchronization failure encountered during processing an Attach Request message from mobile.

Data Source

SGSN_Server

Source Field

attachAuthSynchFail

Source Section

RASuccessFail

attachFailCongestion

The number of Attach Reject messages sent to mobile with a cause IE of "SGSN in static overload" during processing an Attach Request message from mobile.

Data Source

SGSN_Server

Source Field

attachFailCongestion

Source Section

RASuccessFail

attachFailGprsNotAllowed

The number of Attach Reject messages sent to mobile with a cause IE of "GPRS service not allowed" during processing an Attach Request message from mobile.

Data Source

SGSN_Server

Source Field

attachFailGprsNotAllowed

Source Section

RASuccessFail

attachFailIllegalMs

The number of Attach failures with a cause IE of "Illegal Mobile" during processing an Attach Request message from mobile.

Data Source

SGSN_Server

Source Field

attachFailIllegalMs

Source Section

RASuccessFail

attachFailNetwork

The number of Attach Reject messages sent to mobile with a cause IE of "Network failure" during processing an Attach Request message from mobile.

Data Source

SGSN_Server

Source Field

attachFailNetwork

Source Section

RASuccessFail

attachFailNoSuitableCells

The number of Attach Reject messages sent to mobile with a cause IE of "No Suitable Cells In Location Area" during processing an Attach Requst message from mobile.

Data Source

SGSN_Server

Source Field

attachFailNoSuitableCells

Source Section

RASuccessFail

attachFailPLMNNotAllowed

The number of Attach Reject messages sent to mobile with a cause IE of "GPRS services not allowed in this PLMN" during processing an Attach Requst message from mobile.

Data Source

SGSN_Server

Source Field

attachFailPLMNNotAllowed

Source Section

RASuccessFail

attachFailProtocolError

The number of Attach Reject messages sent to mobile with a protocol error related cause IE during processing the Attach Request message from mobile.

Data Source

SGSN_Server

Source Field

attachFailProtocolError

Source Section

RASuccessFail

attachFailRANotAllowed

The number of Attach Reject messages sent to mobile with a cause IE of "Location Area not allowed" during processing an Attach Request message from mobile.

Data Source

SGSN_Server

Source Field

attachFailRANotAllowed

Source Section

RASuccessFail

attachFailServiceNotAllowed

The number of Attach Reject messages sent to mobile with a cause IE of "GPRS services and non-GPRS services not allowed" during processing an Attach Request message from mobile.

Data Source

SGSN_Server

Source Field

attachFailServiceNotAllowed

Source Section

RASuccessFail

attachFailUnknownUser

The number of Attach Reject messages sent to mobile with a cause IE of "IMSI Unknown in HLR" during processing an Attach Request message from mobile.

Data Source

SGSN_Server

Source Field

attachFailUnknownUser

Source Section

RASuccessFail

attachFailVPLMNNotAllowed

The number of Attach Reject messages sent to mobile with a cause IE of "Roaming Not Allowed in this location area" during processing an Attach Request message from mobile.

Data Source

SGSN_Server

Source Field

attachFailVPLMNNotAllowed

Source Section

RASuccessFail

attachSecurityFail

The number of Attach failures due to Security Mode Control failure encountered during processing an Attach Request message from mobile.

Data Source

SGSN_Server

Source Field

attachSecurityFail

Source Section

RASuccessFail

attInterSGSNRau

This measurement provides the number of incoming routing area update attempts initiated by mobiles which roam from another SGSN to this SGSN.

Data Source

SGSN_Server

Source Field

attInterSGSNRau

Source Section

NbrRAGrp

attPsPagingPerRoutingArea

The number of attempted packet switched paging procedures performed

Data Source

SGSN_Server

Source Field

attPsPagingPerRoutingArea

Source Section

RASuccessFail

attPsPagingRepititionsIu

Attempted UMTS PS paging repetitions

Data Source

SGSN_Server

Source Field

attPsPagingRepititionsIu

Source Section

RASuccessFail

Data_interval

Data interval for the SGSN data collection in seconds. It is taken from the relevant <gp> tag in the SGSN XML data file.

Data Source

SGSN_Server

Source Field

<gp> tag value

Source Section

RASuccessFail

e2eBgrdPaging

The number of End-To-End PS paging attempts per routing area

Data Source

SGSN_Server

Source Field

e2eBgrdPaging

Source Section

RASuccessFail

e2eBgrdPgrsp

The number of PS page responses per routing area for End-To-End downlink scenarios

Data Source

SGSN_Server

Source Field

e2eBgrdPgrsp

Source Section

RASuccessFail

e2eIntactPaging

The number of End-To-End PS paging attempts per routing area

Data Source

SGSN_Server

Source Field

e2eIntactPaging

Source Section

RASuccessFail

e2eIntactPgrsp

The number of PS page responses per routing area for End-To-End downlink scenarios

Data Source

SGSN_Server

Source Field

e2eIntactPgrsp

Source Section

RASuccessFail

MM_AttGprsAttach_U

Attempted GPRS attach procedures.

Data Source

SGSN_Server

Source Field

MM.AttGprsAttach.U

Source Section

RASuccessFail

MM_AttPsPagingProcIu

Attempted UMTS PS paging procedures.

Data Source

SGSN_Server

Source Field

MM.AttPsPagingProcIu

Source Section

RASuccessFail

MM_NbrPsPagingMesIu

Number of PS paging message sends from 3G-SGSN to the MS

Data Source

SGSN_Server

Source Field

MM.NbrPsPagingMesIu

Source Section

RASuccessFail

MM_SuccGprsAttach_U

Successful GPRS attach procedures

Data Source

SGSN_Server

Source Field

MM.SuccGprsAttach.U

Source Section

RASuccessFail

MM_SuccPsPagingProcIu

Successful UMTS PS paging procedures

Data Source

SGSN_Server

Source Field

MM.SuccPsPagingProcIu

Source Section

RASuccessFail

succInterSGSNRau

This measurement is incremented when SGSN sends Routing Area Update Accept message to a mobile during processing inter-SGSN Routing Area Update procedure.

Data Source

SGSN_Server

Source Field

succInterSGSNRau

Source Section

NbrRAGrp

succPsPagingRepititionsIu

Successful UMTS PS paging repetitions

Data Source

SGSN_Server

Source Field

succPsPagingRepititionsIu

Source Section

RASuccessFail

unsuccPsPagingPerRoutingArea

The number of unsuccessful packet switched paging procedures performed

Data Source

SGSN_Server

Source Field

unsuccPsPagingPerRoutingArea

Source Section

RASuccessFail

Server_Ethernet Primitive Calculations

The following is a list of primitive calculations for the Server_Ethernet entity.

GRAPHmultiLineSeparator

Special Control Field for Multi-Line Graphs

Calculation

""

NUMDAYS

of days in Report

Updated: 2009-06-23

Calculation

```
DAYSINREPORT()
```

NUMHOURS

of hours in Summation Data

Calculation

Server_Ethernet Peg Counts

The following is a list of peg counts for the Server_Ethernet entity.

Data_interval

Data interval for the SGSN data collection in seconds. It is taken from the relevant <gp> tag in the SGSN XML data file.

Data Source

SGSN_Server

Source Field

<gp> tag value

Source Section

EthernetInterfaceData

ifInBroadcastPkts

The number of packets, delivered by this sub-layer to a higher (sub-)layer, which were addressed to a broadcast address at this sub-layer

Data Source

SGSN_Server

Source Field

ifInBroadcastPkts

Source Section

EthernetInterfaceData

ifInDiscards

The number of inbound packets which were chosen to be discarded even though no errors had been detected to prevent their being deliverable to a higher-layer protocol.

Data Source

SGSN_Server

Source Field

ifInDiscards

Source Section

EthernetInterfaceData

ifInErrors

The number of inbound packets that contained errors preventing them from being deliverable to a higher-layer protocol.

Data Source

SGSN_Server

Source Field

ifInErrors

Source Section

EthernetInterfaceData

ifInMulticastPkts

The number of packets, delivered by this sub-layer to a higher (sub-)layer, which were addressed to a multicast address at this sub-layer. For a MAC layer protocol, this includes both Group and Functional addresses

Data Source

SGSN_Server

Source Field

ifInMulticastPkts

Source Section

EthernetInterfaceData

ifInOctets

The total number of octets received on the interface, including framing characters

Data Source

SGSN_Server

Source Field

ifInOctets

Source Section

EthernetInterfaceData

ifInUcastPkts

The number of packets, delivered by this sub-layer to a higher (sub-)layer, which were not addressed to a multicast or broadcast address at this sub-layer

Data Source

SGSN_Server

Source Field

ifInUcastPkts

Source Section

EthernetInterfaceData

ifInUnknownProtos

The number of packets received via the interface which were discarded because of an unknown or unsupported protocol.

Data Source

SGSN_Server

Source Field

ifInUnknownProtos

Source Section

EthernetInterfaceData

ifOutBroadcastPkts

The total number of packets that higher-level protocols requested be transmitted, and which were addressed to a broadcast address at this sub-layer, including those that were discarded or not sent

Data Source

SGSN_Server

Source Field

ifOutBroadcastPkts

Source Section

EthernetInterfaceData

ifOutDiscards

The number of outbound packets which were chosen to be discarded even though no errors had been detected to prevent their being transmitted.

Data Source

SGSN_Server

Source Field

ifOutDiscards

Source Section

EthernetInterfaceData

ifOutErrors

The number of outbound packets that could not be transmitted because of errors.

Data Source

SGSN_Server

Source Field

ifOutErrors

Source Section

EthernetInterfaceData

ifOutMulticastPkts

The total number of packets that higher-level protocols requested be transmitted, and which were addressed to a multicast address at this sub-layer, including those that were discarded or not sent.

Data Source

SGSN_Server

Source Field

ifOutMulticastPkts

Source Section

EthernetInterfaceData

ifOutOctets

The total number of octets transmitted out of the interface, including framing characters

Data Source

SGSN_Server

Source Field

ifOutOctets

Source Section

EthernetInterfaceData

ifOutUcastPkts

The total number of packets that higher-level protocols requested be transmitted, and which were not addressed to a multicast or broadcast address at this sub-layer, including those that were discarded or not sent.

Data Source

SGSN_Server

Source Field

ifOutUcastPkts

Source Section

EthernetInterfaceData

ServiceArea Primitive Calculations

The following is a list of primitive calculations for the ServiceArea entity.

GPRS_Attach_Success_Rate_per_SAC

GPRS Attach Success Rate defines the percentage of successfully completed GPRS attach procedures for this Service Area Code.

Calculation

```
succGprsAttachPerSac * 100.0 / attGprsAttachPerSac
```

GRAPHmultiLineSeparator

Special Control Field for Multi-Line Graphs

Calculation

```
""
```

NUMDAYS

of days in Report

Calculation

```
DAYSINREPORT()
```

NUMHOURS

of hours in Summation Data

Calculation

PDP_context_activation_success_rate_for_128kDL

Percentage rate of successful PDP context activations with a DL bearer speed of 128kbps

Calculation

```
succActPdpContextMs128kDLPerSac * 100.0 / attActPdpContextMs128kDLPerSac
```

PDP_context_activation_success_rate_for_128kUL

Percentage rate of successful PDP context activations with a UL bearer speed of 128kbps

Calculation

```
succActPdpContextMs128kULPerSac * 100.0 / attActPdpContextMs128kULPerSac
```

PDP_context_activation_success_rate_for_16kDL

Percentage rate of successful PDP context activations with a DL bearer speed of 16kbps

Calculation

```
succActPdpContextMs16kDLPerSac * 100.0 / attActPdpContextMs16kDLPerSac
```

PDP_context_activation_success_rate_for_16kUL

Percentage rate of successful PDP context activations with a UL bearer speed of 16kbps

Calculation

```
succActPdpContextMs16kULPerSac * 100.0 / attActPdpContextMs16kULPerSac
```

PDP_context_activation_success_rate_for_32kDL

Percentage rate of successful PDP context activations with a DL bearer speed of 32kbps

Calculation

```
succActPdpContextMs32kDLPerSac * 100.0 / attActPdpContextMs32kDLPerSac
```

PDP_context_activation_success_rate_for_32kUL

Percentage rate of successful PDP context activations with a UL bearer speed of 32kbps

Calculation

```
succActPdpContextMs32kULPerSac * 100.0 / attActPdpContextMs32kULPerSac
```

PDP_context_activation_success_rate_for_384kDL

Percentage rate of successful PDP context activations with a DL bearer speed of 384kbps

Calculation

```
succActPdpContextMs384kDLPerSac * 100.0 / attActPdpContextMs384kDLPerSac
```

PDP_context_activation_success_rate_for_384kUL

Percentage rate of successful PDP context activations with a UL bearer speed of 384kbps

Calculation

```
succActPdpContextMs384kULPerSac * 100.0 / attActPdpContextMs384kULPerSac
```

PDP_context_activation_success_rate_for_64kDL

Percentage rate of successful PDP context activations with a DL bearer speed of 64kbps

Calculation

```
succActPdpContextMs64kDLPerSac * 100.0 / attActPdpContextMs64kDLPerSac
```

PDP_context_activation_success_rate_for_64kUL

Percentage rate of successful PDP context activations with a UL bearer speed of 64kbps

Calculation

```
succActPdpContextMs64kULPerSac * 100.0 / attActPdpContextMs64kULPerSac
```

PDP_context_activation_success_rate_for_8kDL

Percentage rate of successful PDP context activations with a DL bearer speed of 8kbps

Calculation

```
succActPdpContextMs8kDLPerSac * 100.0 / attActPdpContextMs8kDLPerSac
```

PDP_context_activation_success_rate_for_8kUL

Percentage rate of successful PDP context activations with a UL bearer speed of 8kbps

Calculation

```
succActPdpContextMs8kULPerSac * 100.0 / attActPdpContextMs8kULPerSac
```

PDP_context_activation_success_rate_for_HSDPA_DL

Percentage rate of successful PDP context activations with High-Speed Downlink Packet Access on DL

Calculation

```
succActPdpContextMsHSDPADLPerSac * 100.0 / attActPdpContextMsHSDPADLPerSac
```

ServiceArea Peg Counts

The following is a list of peg counts for the ServiceArea entity.

attActPdpContextMs128kDLPerSac

Attempted PDP context activations with a DL bearer speed of 128kbps

Data Source

SGSN_Server

Source Field

attActPdpContextMs128kDLPerSac

Source Section

PerSacCPSuccFail

Updated: 2009-06-23

attActPdpContextMs128kULPerSac

Attempted PDP context activations with a UL bearer speed of 128kbps

Data Source

SGSN_Server

Source Field

attActPdpContextMs128kULPerSac

Source Section

PerSacCPSuccFail

attActPdpContextMs16kDLPerSac

Attempted PDP context activations with a DL bearer speed of 16kbps

Data Source

SGSN_Server

Source Field

attActPdpContextMs16kDLPerSac

Source Section

PerSacCPSuccFail

attActPdpContextMs16kULPerSac

Attempted PDP context activations with a UL bearer speed of 16kbps

Data Source

SGSN_Server

Source Field

attActPdpContextMs16kULPerSac

Source Section

PerSacCPSuccFail

attActPdpContextMs32kDLPerSac

Attempted PDP context activations with a DL bearer speed of 32kbps

Data Source

SGSN_Server

Source Field

attActPdpContextMs32kDLPerSac

Source Section

PerSacCPSuccFail

attActPdpContextMs32kULPerSac

Attempted PDP context activations with a UL bearer speed of 32kbps

Data Source

SGSN_Server

Source Field

attActPdpContextMs32kULPerSac

Source Section

PerSacCPSuccFail

attActPdpContextMs384kDLPerSac

Attempted PDP context activations with a DL bearer speed of 384kbps

Data Source

SGSN_Server

Source Field

attActPdpContextMs384kDLPerSac

Source Section

PerSacCPSuccFail

attActPdpContextMs384kULPerSac

Attempted PDP context activations with a UL bearer speed of 384kbps

Data Source

SGSN_Server

Source Field

attActPdpContextMs384kULPerSac

Source Section

PerSacCPSuccFail

attActPdpContextMs64kDLPerSac

Attempted PDP context activations with a DL bearer speed of 64kbps

Data Source

SGSN_Server

Source Field

attActPdpContextMs64kDLPerSac

Source Section

PerSacCPSuccFail

attActPdpContextMs64kULPerSac

Attempted PDP context activations with a UL bearer speed of 64kbps

Data Source

SGSN_Server

Source Field

attActPdpContextMs64kULPerSac

Source Section

PerSacCPSuccFail

attActPdpContextMs8kDLPerSac

Attempted PDP context activations with a DL bearer speed of 8kbps

Data Source

SGSN_Server

Source Field

attActPdpContextMs8kDLPerSac

Source Section

PerSacCPSuccFail

attActPdpContextMs8kULPerSac

Attempted PDP context activations with a UL bearer speed of 8kbps

Data Source

SGSN_Server

Source Field

attActPdpContextMs8kULPerSac

Source Section

PerSacCPSuccFail

attActPdpContextMsHSDPADLPerSac

Attempted PDP context activations with High-Speed Downlink Packet Access on DL

Data Source

SGSN_Server

Source Field

attActPdpContextMsHSDPADLPerSac

Source Section

PerSacCPSuccFail

attActPdpCtxtMsHSUPAULPerSac

Attempted PDP context activations with a UL bearer speed of greater than 384kbps (HSUPA)

Data Source

SGSN_Server

Source Field

attActPdpContextMsHSUPAULPerSac

Source Section

PerSacCPSuccFail

attGprsAttachPerSac

Attempted GPRS attaches

Data Source

SGSN_Server

Source Field

attGprsAttachPerSac

Source Section

PerSacCPSuccFail

Data_interval

Data interval for the SGSN data collection in seconds. It is taken from the <gp> tag value from PerSacCPSuccFail section in the SGSN XML data file.

Data Source

SGSN_Server

Source Field

<gp> tag value

Source Section

PerSacCPSuccFail

downlinkMeanThroughput128kPerSac

Downlink Mean Throughput for a bearers with a speed of 128k

Data Source

SGSN_Server

Source Field

downlinkMeanThroughput128kPerSac

Source Section

PerSacTPThroughput

downlinkMeanThroughput16kPerSac

Downlink Mean Throughput for a bearers with a speed of 16k

Data Source

SGSN_Server

Source Field

downlinkMeanThroughput16kPerSac

Source Section

PerSacTPThroughput

downlinkMeanThroughput32kPerSac

Downlink Mean Throughput for a bearers with a speed of 32k

Data Source

SGSN_Server

Source Field

downlinkMeanThroughput32kPerSac

Source Section

PerSacTPThroughput

downlinkMeanThroughput384kPerSac

Downlink Mean Throughput for a bearers with a speed of 384k

Data Source

SGSN_Server

Source Field

downlinkMeanThroughput384kPerSac

Source Section

PerSacTPThroughput

downlinkMeanThroughput64kPerSac

Downlink Mean Throughput for a bearers with a speed of 64k

Data Source

SGSN_Server

Source Field

downlinkMeanThroughput64kPerSac

Source Section

PerSacTPThroughput

downlinkMeanThroughput8kPerSac

Downlink Mean Throughput for a bearers with a speed of 8k

Data Source

SGSN_Server

Source Field

downlinkMeanThroughput8kPerSac

Source Section

PerSacTPThroughput

downlinkMeanThroughputHSDPAPerSac

Downlink Mean Throughput for High-Speed Downlink Packet Access bearers

Data Source

SGSN_Server

Source Field

downlinkMeanThroughputHSDPAPerSac

Source Section

PerSacTPThroughput

e2eSetupRabFailBadRABComb

The number of End-To-End PS session setup failures encountered during processing RAB establishment due to Invalid RAB Parameters Combination

Data Source

SGSN_Server

Source Field

e2eSetupRabFail.BadRABComb

Source Section

PerSacCPSuccFail

e2eSetupRabFailBadRABId

The number of End-To-End PS session setup failures encountered during processing RAB establishment due to Invalid RAB ID

Data Source

SGSN_Server

Source Field

e2eSetupRabFail.BadRABId

Source Section

PerSacCPSuccFail

e2eSetupRabFailBadRABParm

The number of End-To-End PS session setup failures encountered during processing RAB establishment due to Invalid RAB Parameters Value

Data Source

SGSN_Server

Source Field

e2eSetupRabFail.BadRABParm

Source Section

PerSacCPSuccFail

e2eSetupRabFailLimitExceed

The number of End-To-End PS session setup failures encountered during processing RAB establishment due to no remaining RAB

Data Source

SGSN_Server

Source Field

e2eSetupRabFail.LimitExceed

Source Section

PerSacCPSuccFail

e2eSetupRabFailNoGrBR

The number of End-To-End PS session setup failures encountered during processing RAB establishment due to Requested Guaranteed Bit Rate not Available

Data Source

SGSN_Server

Source Field

e2eSetupRabFail.NoGrBR

Source Section

PerSacCPSuccFail

e2eSetupRabFailNoGrDLBR

The number of End-To-End PS session setup failures encountered during processing RAB establishment due to Requested Guaranteed Bit Rate for DL not Available

Data Source

SGSN_Server

Source Field

e2eSetupRabFail.NoGrDLBR

Source Section

PerSacCPSuccFail

e2eSetupRabFailNoGrULBR

The number of End-To-End PS session setup failures encountered during processing RAB establishment due to Requested Guaranteed Bit Rate for UL not Available

Data Source

SGSN_Server

Source Field

e2eSetupRabFail.NoGrULBR

Source Section

PerSacCPSuccFail

e2eSetupRabFailNoMaxBR

The number of End-To-End PS session setup failures encountered during processing RAB establishment due to Requested Maximum Bit Rate not Available

Data Source

SGSN_Server

Source Field

e2eSetupRabFail.NoMaxBR

Source Section

PerSacCPSuccFail

e2eSetupRabFailNoMaxDLBR

The number of End-To-End PS session setup failures encountered during processing RAB establishment due to Requested Maximum Bit Rate for DL not Available

Data Source

SGSN_Server

Source Field

e2eSetupRabFail.NoMaxDLBR

Source Section

PerSacCPSuccFail

e2eSetupRabFailNoMaxULBR

The number of End-To-End PS session setup failures encountered during processing RAB establishment due to Requested Maximum Bit Rate for UL not Available

Data Source

SGSN_Server

Source Field

e2eSetupRabFail.NoMaxULBR

Source Section

PerSacCPSuccFail

e2eSetupRabFailNoTCAvail

The number of End-To-End PS session setup failures encountered during processing RAB establishment due to Requested Traffic Class not Available

Data Source

SGSN_Server

Source Field

e2eSetupRabFail.NoTCAvail

Source Section

PerSacCPSuccFail

e2eSetupRabFailTimeOut

The number of End-To-End PS session setup timer expiry encountered during processing RAB establishment

Data Source

SGSN_Server

Source Field

e2eSetupRabFail.TimeOut

Source Section

PerSacCPSuccFail

gprsAttachDelayAveragePerSac

The average GPRS attach delay is defined as the average time required to perform a GPRS attach for a UE to the UMTS PS domain, in preparing for any packet calls.

Data Source

SGSN_Server

Source Field

gprsAttachDelayAveragePerSac

Source Section

PerSacCPDelay

rab_AttEstab_Bgrd

The number of RAB setup requests that SGSN sends RNC per background traffic class

Data Source

SGSN_Server

Source Field

rab.AttEstab.Bgrd

Source Section

PerSacCPSuccFail

rab_AttEstab_Conv

The number of RAB setup requests that SGSN sends RNC per conversational traffic class

Data Source

SGSN_Server

Source Field

rab.AttEstab.Conv

Source Section

PerSacCPSuccFail

rab_AttEstab_Intact

The number of RAB setup requests that SGSN sends RNC per interactive traffic class

Data Source

SGSN_Server

Source Field

rab.AttEstab.Intact

Source Section

PerSacCPSuccFail

rab_AttEstab_Strm

The number of RAB setup requests that SGSN sends RNC per streaming traffic class

Data Source

SGSN_Server

Source Field

rab.AttEstab.Strm

Source Section

PerSacCPSuccFail

rab_SuccEstab_Bgrd

The number of successfully established RAB connections as responded by RNC per background traffic class

Data Source

SGSN_Server

Source Field

rab.SuccEstab.Bgrd

Source Section

PerSacCPSuccFail

rab_SuccEstab_Conv

The number of successfully established RAB connections as responded by RNC per conversational traffic class

Data Source

SGSN_Server

Source Field

rab.SuccEstab.Conv

Source Section

PerSacCPSuccFail

rab_SuccEstab_Intact

The number of successfully established RAB connections as responded by RNC per interactive traffic class

Data Source

SGSN_Server

Source Field

rab.SuccEstab.Intact

Source Section

PerSacCPSuccFail

rab_SuccEstab_Strm

The number of successfully established RAB connections as responded by RNC per streaming traffic class

Data Source

SGSN_Server

Source Field

rab.SuccEstab.Strm

Source Section

PerSacCPSuccFail

RabFailBadRABComb

The number of RAB setup failures encountered during processing RAB establishment due to Invalid RAB Parameters Combination

Data Source

SGSN_Server

Source Field

RabFail.BadRABComb

Source Section

PerSacCPSuccFail

RabFailBadRABId

The number of RAB setup failures encountered during processing RAB establishment due to Invalid RAB ID

Data Source

SGSN_Server

Source Field

RabFail.BadRABId

Source Section

PerSacCPSuccFail

RabFailBadRABParm

The number of RAB setup failures encountered during processing RAB establishment due to Invalid RAB Parameters Value

Data Source

SGSN_Server

Source Field

RabFail.BadRABParm

Source Section

PerSacCPSuccFail

RabFailLimitExceed

The number of RAB setup failures encountered during processing RAB establishment due to no remaining RAB

Data Source

SGSN_Server

Source Field

RabFail.LimitExceed

Source Section

PerSacCPSuccFail

RabFailNoGrBR

The number of RAB setup failures encountered during processing RAB establishment due to Requested Guaranteed Bit Rate not Available

Data Source

SGSN_Server

Source Field

RabFail.NoGrBR

Source Section

PerSacCPSuccFail

RabFailNoGrDLBR

The number of RAB setup failures encountered during processing RAB establishment due to Requested Guaranteed Bit Rate for DL not Available

Data Source

SGSN_Server

Source Field

RabFail.NoGrDLBR

Source Section

PerSacCPSuccFail

RabFailNoGrULBR

The number of RAB setup failures encountered during processing RAB establishment due to Requested Guaranteed Bit Rate for UL not Available

Data Source

SGSN_Server

Source Field

RabFail.NoGrULBR

Source Section

PerSacCPSuccFail

RabFailNoMaxBR

The number of RAB setup failures encountered during processing RAB establishment due to Requested Maximum Bit Rate not Available

Data Source

SGSN_Server

Source Field

RabFail.NoMaxBR

Source Section

PerSacCPSuccFail

RabFailNoMaxDLBR

The number of RAB setup failures encountered during processing RAB establishment due to Requested Maximum Bit Rate for DL not Available

Data Source

SGSN_Server

Source Field

RabFail.NoMaxDLBR

Source Section

PerSacCPSuccFail

RabFailNoMaxULBR

The number of RAB setup failures encountered during processing RAB establishment due to Requested Maximum Bit Rate for UL not Available

Data Source

SGSN_Server

Source Field

RabFail.NoMaxULBR

Source Section

PerSacCPSuccFail

RabFailNoTCAvail

The number of RAB setup failures encountered during processing RAB establishment due to Requested Traffic Class not Available

Data Source

SGSN_Server

Source Field

RabFail.NoTCAvail

Source Section

PerSacCPSuccFail

RabFailTimeOut

The number of RAB setup timer expiry encountered during processing RAB establishment

Data Source

SGSN_Server

Source Field

RabFail.TimeOut

Source Section

PerSacCPSuccFail

serviceRequestDelayAveragePerSac

Average Service Request delay

Data Source

SGSN_Server

Source Field

serviceRequestDelayAveragePerSac

Source Section

PerSacCPDelay

sessionActivationDelayAveragePerSac

Average Session Activation delay

Data Source

SGSN_Server

Source Field

sessionActivationDelayAveragePerSac

Source Section

PerSacCPDelay

succActPdpContextMs128kDLPerSac

Successful PDP context activations with a DL bearer speed of 128kbps

Data Source

SGSN_Server

Source Field

succActPdpContextMs128kDLPerSac

Source Section

PerSacCPSuccFail

succActPdpContextMs128kULPerSac

Successful PDP context activations with a UL bearer speed of 128kbps

Data Source

SGSN_Server

Source Field

succActPdpContextMs128kULPerSac

Source Section

PerSacCPSuccFail

succActPdpContextMs16kDLPerSac

Successful PDP context activations with a DL bearer speed of 16kbps

Data Source

SGSN_Server

Source Field

succActPdpContextMs16kDLPerSac

Source Section

PerSacCPSuccFail

succActPdpContextMs16kULPerSac

Successful PDP context activations with a UL bearer speed of 16kbps

Data Source

SGSN_Server

Source Field

succActPdpContextMs16kULPerSac

Source Section

PerSacCPSuccFail

succActPdpContextMs32kDLPerSac

Successful PDP context activations with a DL bearer speed of 32kbps

Data Source

SGSN_Server

Source Field

succActPdpContextMs32kDLPerSac

Source Section

PerSacCPSuccFail

succActPdpContextMs32kULPerSac

Successful PDP context activations with a UL bearer speed of 32kbps

Data Source

SGSN_Server

Source Field

succActPdpContextMs32kULPerSac

Source Section

PerSacCPSuccFail

succActPdpContextMs384kDLPerSac

Successful PDP context activations with a DL bearer speed of 384kbps

Data Source

SGSN_Server

Source Field

succActPdpContextMs384kDLPerSac

Source Section

PerSacCPSuccFail

succActPdpContextMs384kULPerSac

Successful PDP context activations with a UL bearer speed of 384kbps

Data Source

SGSN_Server

Source Field

succActPdpContextMs384kULPerSac

Source Section

PerSacCPSuccFail

succActPdpContextMs64kDLPerSac

Successful PDP context activations with a DL bearer speed of 64kbps

Data Source

SGSN_Server

Source Field

succActPdpContextMs64kDLPerSac

Source Section

PerSacCPSuccFail

succActPdpContextMs64kULPerSac

Successful PDP context activations with a UL bearer speed of 64kbps

Data Source

SGSN_Server

Source Field

succActPdpContextMs64kULPerSac

Source Section

PerSacCPSuccFail

succActPdpContextMs8kDLPerSac

Successful PDP context activations with a DL bearer speed of 8kbps

Data Source

SGSN_Server

Source Field

succActPdpContextMs8kDLPerSac

Source Section

PerSacCPSuccFail

succActPdpContextMs8kULPerSac

Successful PDP context activations with a UL bearer speed of 8kbps

Data Source

SGSN_Server

Source Field

succActPdpContextMs8kULPerSac

Source Section

PerSacCPSuccFail

succActPdpContextMsHSDPADLPerSac

Succesful PDP context activations with High-Speed Downlink Packet Access on DL

Data Source

SGSN_Server

Source Field

succActPdpContextMsHSDPADLPerSac

Source Section

PerSacCPSuccFail

succActPdpCtxtMsHSUPAULPerSac

Successful PDP context activations with a UL bearer speed of greater than 384kbps (HSUPA)

Data Source

SGSN_Server

Source Field

succActPdpContextMsHSUPAULPerSac

Source Section

PerSacCPSuccFail

succGprsAttachPerSac

Successful GPRS attaches

Data Source

SGSN_Server

Source Field

succGprsAttachPerSac

Source Section

PerSacCPSuccFail

uplinkMeanThroughput128kPerSac

Uplink Mean Throughput for a bearers with a speed of 128k

Data Source

SGSN_Server

Source Field

uplinkMeanThroughput128kPerSac

Source Section

PerSacTPThroughput

uplinkMeanThroughput16kPerSac

Uplink Mean Throughput for a bearers with a speed of 16k

Data Source

SGSN_Server

Source Field

uplinkMeanThroughput16kPerSac

Source Section

PerSacTPThroughput

uplinkMeanThroughput32kPerSac

Uplink Mean Throughput for a bearers with a speed of 32k

Data Source

SGSN_Server

Source Field

uplinkMeanThroughput32kPerSac

Source Section

PerSacTPThroughput

uplinkMeanThroughput384kPerSac

Uplink Mean Throughput for a bearers with a speed of 384k

Data Source

SGSN_Server

Source Field

uplinkMeanThroughput384kPerSac

Source Section

PerSacTPThroughput

uplinkMeanThroughput64kPerSac

Uplink Mean Throughput for a bearers with a speed of 64k

Data Source

SGSN_Server

Source Field

uplinkMeanThroughput64kPerSac

Source Section

PerSacTPThroughput

uplinkMeanThroughput8kPerSac

Uplink Mean Throughput for a bearers with a speed of 8k

Data Source

SGSN_Server

Source Field

uplinkMeanThroughput8kPerSac

Source Section

PerSacTPThroughput

uplinkMeanThruputHSUPAPerSac

Uplink Mean Throughput for a bearer with a speed of greater than 384k (HSUPA)

Data Source

SGSN_Server

Source Field

uplinkMeanThroughputHSUPAPerSac

Source Section

PerSacTPThroughput

SGSN Primitive Calculations

The following is a list of primitive calculations for the SGSN entity.

GRAPHmultiLineSeparator

Special Control Field for Multi-Line Graphs

Calculation

```
""
```

NUMDAYS

of days in Report

Calculation

```
DAYSINREPORT()
```

NUMHOURS

of hours in Summation Data

Calculation

SGSN_Gateway Primitive Calculations

The following is a list of primitive calculations for the SGSN_Gateway entity.

GRAPHmultiLineSeparator

Special Control Field for Multi-Line Graphs

Calculation

```
""
```

NUMDAYS

of days in Report

Calculation

```
DAYSINREPORT()
```

NUMHOURS

of hours in Summation Data

Calculation

SGSN_Gateway Peg Counts

The following is a list of peg counts for the SGSN_Gateway entity.

atmCellsDropped

ATM Cells dropped

Data Source

SGSN_Gateway

Source Field

atmCellsDropped

Source Section

ATMPhysLink

atmCellsReceived

Total number of ATM cells received

Data Source

SGSN_Gateway

Source Field

atmCellsReceived

Source Section

ATMPhysLink

atmCellsTransmitted

Total number of ATM cells transmitted

Data Source

SGSN_Gateway

Source Field

atmCellsTransmitted

Source Section

ATMPhysLink

atmLinkPacketsReceived

Total Received Packets

Data Source

SGSN_Gateway

Source Field

atmLinkPacketsReceived

Source Section

ATMPhysLink

atmLinkPacketsTransmitted

Total Transmitted Packets

Data Source

SGSN_Gateway

Source Field

atmLinkPacketsTransmitted

Source Section

ATMPhysLink

averageCpuUsage

The average percent CPU usage over a granularity period. CP or SP

Data Source

SGSN_Gateway

Source Field

averageCpuUsage

Source Section

CriticalSystemResources

cookieAckChunkReceived

The total number of COOKIE-ACK chunks received .

Data Source

SGSN_Gateway

Source Field

cookieAckChunkReceived

Source Section

SctpChunkData

cookieAckChunkSent

The total number of COOKIE-ACK chunks transmitted.

Data Source

SGSN_Gateway

Source Field

cookieAckChunkSent

Source Section

SctpChunkData

cookieChunkReceived

The total number of COOKIE-ECHO chunks received.

Data Source

SGSN_Gateway

Source Field

cookieChunkReceived

Source Section

SctpChunkData

cookieChunkSent

The total number of COOKIE-ECHO chunks transmitted.

Data Source

SGSN_Gateway

Source Field

cookieChunkSent

Source Section

SctpChunkData

Data_interval

Data interval for the SGSN data collection in seconds. It is taken from the <gp> tag value from IPData section in the SGSN XML data file.

Data Source

SGSN_Gateway

Source Field

<gp> tag value

Source Section

IPData

dataChunkReceived

The total number of DATA chunks received.

Data Source

SGSN_Gateway

Source Field

dataChunkReceived

Source Section

SctpChunkData

dataChunkSent

The total number of DATA chunks transmitted.

Data Source

SGSN_Gateway

Source Field

dataChunkSent

Source Section

SctpChunkData

diskUsagePart1

The percent of disk space used for the first disk partition

Data Source

SGSN_Gateway

Source Field

diskUsagePart1

Source Section

CriticalSystemResources

diskUsagePart2

The percent of disk space used for the second disk partition

Data Source

SGSN_Gateway

Source Field

diskUsagePart2

Source Section

CriticalSystemResources

diskUsagePart3

The percent of disk space used for the third disk partition

Data Source

SGSN_Gateway

Source Field

diskUsagePart3

Source Section

CriticalSystemResources

diskUsagePart4

The percent of disk space used for the fourth disk partition

Data Source

SGSN_Gateway

Source Field

diskUsagePart4

Source Section

CriticalSystemResources

diskUsagePart5

The percent of disk space used for the fifth disk partition

Data Source

SGSN_Gateway

Source Field

diskUsagePart5

Source Section

CriticalSystemResources

diskUsagePart6

The percent of disk space used for the sixth disk partition

Data Source

SGSN_Gateway

Source Field

diskUsagePart6

Source Section

CriticalSystemResources

diskUsagePart7

The percent of disk space used for the seventh disk partition

Data Source

SGSN_Gateway

Source Field

diskUsagePart7

Source Section

CriticalSystemResources

diskUsagePart8

The percent of disk space used for the eighth disk partition

Data Source

SGSN_Gateway

Source Field

diskUsagePart8

Source Section

CriticalSystemResources

heartbeatAckChunkReceived

The total number of HEARTBEAT-ACK chunks received.

Data Source

SGSN_Gateway

Source Field

heartbeatAckChunkReceived

Source Section

SctpChunkData

heartbeatAckChunkSent

The total number of HEARTBEAT-ACK chunks transmitted.

Data Source

SGSN_Gateway

Source Field

heartbeatAckChunkSent

Source Section

SctpChunkData

heartbeatChunkReceived

The total number of HEARTBEAT chunks received.

Data Source

SGSN_Gateway

Source Field

heartbeatChunkReceived

Source Section

SctpChunkData

heartbeatChunkSent

The total number of HEARTBEAT chunks transmitted.

Data Source

SGSN_Gateway

Source Field

heartbeatChunkSent

Source Section

SctpChunkData

initAckChunkReceived

The total number of INIT-ACK chunks received

Data Source

SGSN_Gateway

Source Field

initAckChunkReceived

Source Section

SctpChunkData

initAckChunkSent

The total number of INIT-ACK chunks transmitted.

Data Source

SGSN_Gateway

Source Field

initAckChunkSent

Source Section

SctpChunkData

initChunkReceived

The total number of INIT chunks received.

Data Source

SGSN_Gateway

Source Field

initChunkReceived

Source Section

SctpChunkData

initChunkSent

The total number of INIT chunks transmitted.

Data Source

SGSN_Gateway

Source Field

initChunkSent

Source Section

SctpChunkData

ipFragCreates

The number of IP datagram fragments that have been generated as a result of fragmentation this entity.

Data Source

SGSN_Gateway

Source Field

ipFragCreates

Source Section

IPData

ipFragFails

The number of IP datagrams that have been discarded because they needed to be fragmented at this entity but could not be.

Data Source

SGSN_Gateway

Source Field

ipFragFails

Source Section

IPData

ipFragOKs

The number of IP datagrams that have been successfully fragmented at this entity.

Data Source

SGSN_Gateway

Source Field

ipFragOKs

Source Section

IPData

ipInAddrErrors

The number of input datagrams discarded because the IP address in their IP header's destination field was not a valid address to be received at this entity

Data Source

SGSN_Gateway

Source Field

ipInAddrErrors

Source Section

IPData

ipInDelivers

The total number of input datagrams successfully delivered to IP user-protocols (including ICMP).

Data Source

SGSN_Gateway

Source Field

ipInDelivers

Source Section

IPData

ipInDiscards

The number of input IP datagrams for which no problems were encountered to prevent their continued processing, but which were discarded (e.g., for lack of buffer space)

Data Source

SGSN_Gateway

Source Field

ipInDiscards

Source Section

IPData

ipInHdrErrors

The number of input datagrams discarded due to errors in their IP headers

Data Source

SGSN_Gateway

Source Field

ipInHdrErrors

Source Section

IPData

ipInReceives

The total number of input datagrams received from interfaces, including those received in error

Data Source

SGSN_Gateway

Source Field

ipInReceives

Source Section

IPData

ipInUnknownProtos

The number of locally-addressed datagrams received successfully but discarded because of an unknown or unsupported protocol.

Data Source

SGSN_Gateway

Source Field

ipInUnknownProtos

Source Section

IPData

ipOutDiscards

The number of output IP datagrams for which no problem was encountered to prevent their transmission to their destination, but which were discarded (e.g., for lack of buffer space).

Data Source

SGSN_Gateway

Source Field

ipOutDiscards

Source Section

IPData

ipOutNoRoutes

The number of IP datagrams discarded because no route could be found to transmit them to their destination.

Data Source

SGSN_Gateway

Source Field

ipOutNoRoutes

Source Section

IPData

ipOutRequests

The total number of IP datagrams which local IP user-protocols (including ICMP) supplied to IP in requests for transmission. Note that this counter does not include any datagrams counted in ipForwDatagrams.

Data Source

SGSN_Gateway

Source Field

ipOutRequests

Source Section

IPData

ipReasmFails

The number of failures detected by the IP re-assembly algorithm (for whatever reason: timed out, errors, etc)

Data Source

SGSN_Gateway

Source Field

ipReasmFails

Source Section

IPData

ipReasmOKs

The number of IP datagrams successfully re-assembled.

Data Source

SGSN_Gateway

Source Field

ipReasmOKs

Source Section

IPData

ipReasmReqds

The number of IP fragments received which needed to be reassembled at this entity

Data Source

SGSN_Gateway

Source Field

ipReasmReqds

Source Section

IPData

maximumCpuUsage

The maximum percent CPU usage over a granularity period. CP or SP

Data Source

SGSN_Gateway

Source Field

maximumCpuUsage

Source Section

CriticalSystemResources

sackChunkReceived

The total number of SACK chunks received.

Data Source

SGSN_Gateway

Source Field

sackChunkReceived

Source Section

SctpChunkData

sackChunkSent

The total number of SACK chunks transmitted.

Data Source

SGSN_Gateway

Source Field

sackChunkSent

Source Section

SctpChunkData

shutdownAckChunkReceived

The total number of SHUTDOWN-ACK chunks received.

Data Source

SGSN_Gateway

Source Field

shutdownAckChunkReceived

Source Section

SctpChunkData

shutdownAckChunkSent

The total number of SHUTDOWN-ACK chunks transmitte.

Data Source

SGSN_Gateway

Source Field

shutdownAckChunkSent

Source Section

SctpChunkData

shutdownChunkReceived

The total number of SHUTDOWN chunks received.

Data Source

SGSN_Gateway

Source Field

shutdownChunkReceived

Source Section

SctpChunkData

shutdownChunkSent

The total number of SHUTDOWN chunks transmitted.

Data Source

SGSN_Gateway

Source Field

shutdownChunkSent

Source Section

SctpChunkData

shutdownCompChunkReceived

The total number of SHUTDOWN-COMPLETE chunks received.

Data Source

SGSN_Gateway

Source Field

shutdownCompChunkReceived

Source Section

SctpChunkData

shutdownCompChunkSent

The total number of SHUTDOWN-COMPLETE chunks transmitted.

Data Source

SGSN_Gateway

Source Field

shutdownCompChunkSent

Source Section

SctpChunkData

tcpActiveOpens

The number of times TCP connections have made a direct transition to the SYN-SENT state from the CLOSED state.

Data Source

SGSN_Gateway

Source Field

tcpActiveOpens

Source Section

TCPData

tcpAttemptFails

The number of times TCP connections have made a direct transition to the CLOSED state from either the SYN-SENT state or the SYN-RCVD state, plus the number of times TCP connections have made a direct transition to the LISTEN state from the SYN-RCVD state.

Data Source

SGSN_Gateway

Source Field

tcpAttemptFails

Source Section

TCPData

tcpCurrEstab

The number of TCP connections for which the current state is either ESTABLISHED or CLOSE-WAIT.

Data Source

SGSN_Gateway

Source Field

tcpCurrEstab

Source Section

TCPData

tcpEstabResets

The number of times TCP connections have made a direct transition to the CLOSED state from either the ESTABLISHED state or the CLOSE-WAIT state.

Data Source

SGSN_Gateway

Source Field

tcpEstabResets

Source Section

TCPData

tcpInErrs

The total number of segments received in error (e.g., bad TCP checksums)

Data Source

SGSN_Gateway

Source Field

tcpInErrs

Source Section

TCPData

tcpInSegs

The total number of segments received, including those received in error

Data Source

SGSN_Gateway

Source Field

tcpInSegs

Source Section

TCPData

tcpOutRsts

The number of TCP segments sent containing the RST flag

Data Source

SGSN_Gateway

Source Field

tcpOutRsts

Source Section

TCPData

tcpOutSegs

The total number of segments sent, including those on current connections but excluding those containing only retransmitted octets.

Data Source

SGSN_Gateway

Source Field

tcpOutSegs

Source Section

TCPData

tcpPassiveOpens

The number of times TCP connections have made a direct transition to the SYN-RCVD state from the LISTEN state.

Data Source

SGSN_Gateway

Source Field

tcpPassiveOpens

Source Section

TCPData

tcpRetransSegs

The total number of segments retransmitted - that is, the number of TCP segments transmitted containing one or more previously transmitted octets.

Data Source

SGSN_Gateway

Source Field

tcpRetransSegs

Source Section

TCPData

udpInDatagrams

The total number of UDP datagrams delivered to UDP users.

Data Source

SGSN_Gateway

Source Field

udpInDatagrams

Source Section

UDPData

udpInErrors

The number of received UDP datagrams that could not be delivered for reasons other than the lack of an application at the destination port.

Data Source

SGSN_Gateway

Source Field

udpInErrors

Source Section

UDPData

udpNoPorts

The total number of received UDP datagrams for which there was no application at the destination port.

Data Source

SGSN_Gateway

Source Field

udpNoPorts

Source Section

UDPData

udpOutDatagrams

The total number of UDP datagrams sent to UDP users.

Data Source

SGSN_Gateway

Source Field

udpOutDatagrams

Source Section

UDPData

SGSN_Server Primitive Calculations

The following is a list of primitive calculations for the SGSN_Server entity.

Attachment_Success_Rate

Attachment Success Rate is the percentage of attempts by the mobile to attach to the Core network (SGSN) that were successful from the network's perspective.

Calculation

```
MM_SuccGprsAttach_U * 100.0 / MM_AttGprsAttach_U
```

attPsPagingRepititionsIu

Attempted UMTS PS paging repetitions

Calculation

```
vsum(attPsPagingRepititionsIu_0302,sum(RoutingArea,attPsPagingRepitition-
sIu))
```

Authentication_and_Ciphering_Success_Ratio_MS_to_SGSN

Authentication and Ciphering Success Ratio (MS- PS core) defines the percentage of ciphering procedures started by the SGSN that were successfully completed.

Calculation

```
SEC_SuccCiphering * 100.0 / SEC_AttCiphering
```

Authentication_and_Ciphering_Success_Ratio_SGSN_to_HLR

Authentication and Ciphering Success Ratio (PS core- HLR) defines the percentage of requests for authentication sets sent to the HLR that were successfully completed.

Calculation

```
SEC_SuccReqAuthSetsHlrV3 * 100.0 / SEC_AttReqAuthSetsHlrV3
```

Authentication_failure_rate

This indicator calculates the failure rate of authentication attempted by the SGSN.

Calculation

```
vsum (attAuthInSgsn, -1.0 * succAuthInSgsn, 0) * 100.0 / attAuthInSgsn
```

Authentication_set_request_empty_response_percentage

This indicator calculates the percentage of empty responses to the SGSN requests for authentication sets sent to the HLR.

Calculation

```
SEC_NbrEmptyRespAuthSetsHlrV3 * 100.0 / SEC_AttReqAuthSetsHlrV3
```

Authentication_set_request_failure_rate

This indicator calculates the failure rate of authentication set requests sent by the SGSN to the HLR.

Calculation

```
vsum (SEC_AttReqAuthSetsHlrV3, -1.0 * SEC_SuccReqAuthSetsHlrV3, 0) * 100.0
/ SEC_AttReqAuthSetsHlrV3
```

Authentication_set_request_success_rate

This indicator calculates the success rate of authentication set requests sent by the SGSN to the HLR.

Calculation

```
SEC_SuccReqAuthSetsHlrV3 * 100.0 / SEC_AttReqAuthSetsHlrV3
```

Authentication_success_rate

This indicator calculates the success rate of authentication attempted by the SGSN.

Calculation

```
succAuthInSgsn * 100.0 / attAuthInSgsn
```

First_Paging_Success_Rate

First Paging Success Rate defines the rate of successful paging in the packet network. This KPI includes only initial paging attempts (i.e., no retries are included in this KPI).

Calculation

```
MM_SuccPsPagingProcIu * 100.0 / MM_AttPsPagingProcIu
```

GGSN_initiated_PDP_context_deactivation_failure_rate

This indicator calculates the failure rate of PDP context deactivation procedures initiated by the GGSN.

Calculation

```
vsum (SM_AttDeactPdpContextGgsn_U, -1.0 * SM_SuccDeactPdpContextGgsn_U, 0)
* 100.0 / SM_AttDeactPdpContextGgsn_U
```

GGSN_initiated_PDP_context_deactivation_success_rate

This indicator calculates the success rate of PDP context deactivation procedures initiated by the GGSN.

Calculation

```
SM_SuccDeactPdpContextGgsn_U * 100.0 / SM_AttDeactPdpContextGgsn_U
```

Gn_Interface_Octets_Transferred

Gn Interface Octets Transferred defines the number of octets transferred over the Gn interface on the SGSN.

Calculation

```
vsum (TrafficProcessor.GTP_InDataOctGn, TrafficProcessor.GTP_OutDataOctGn,
GTP_OutSigOctGn, GTP_InSigOctGn, 0)
```

GPRS_Attach_Failure_Rate

This indicator calculates the failure rate of GPRS attach procedures attempted by the UE.

Calculation

```
vsum (MM_AttGprsAttach_U, -1.0 * MM_SuccGprsAttach_U, 0) * 100.0 /
MM_AttGprsAttach_U
```

GPRS_Attach_Success_Rate

GPRS Attach Success Rate defines the percentage of successfully completed GPRS attach procedures.

Calculation

```
MM_SuccGprsAttach_U * 100.0 / MM_AttGprsAttach_U
```

GRAPHmultiLineSeparator

Special Control Field for Multi-Line Graphs

Calculation

```
""
```

Identity_request_failure_rate

This indicator calculates the failure rate of identity requests attempted by the SGSN.

Calculation

```
vsum (SEC_AttIdentityReqImsi_U, -1.0 * SEC_SuccIdentityReqImsi_U, 0) *
100.0 / SEC_AttIdentityReqImsi_U
```

Identity_request_success_rate

This indicator calculates the success rate of identity requests attempted by the SGSN.

Calculation

```
SEC_SuccIdentityReqImsi_U * 100.0 / SEC_AttIdentityReqImsi_U
```

Inter_SGSN_RA_Update_Success_Rate

Inter SGSN Routing Area Update Success Rate defines the routing area update procedure success ratio between two routing areas on two different SGSNs.

Calculation

```
MM_SuccInterSgsnRaUpdate_U * 100.0 / MM_AttInterSgsnRaUpdate_U
```

Intra_SGSN_RA_Update_Success_Rate

Intra SGSN Routing Area Update Success Rate defines the routing area update procedure success ratio between two routing areas over the same SGSN.

Calculation

```
MM_SuccIntraSgsnRaUpdate_U * 100.0 / MM_AttIntraSgsnRaUpdate_U
```

MM_AttGprsAttach_U

Attempted GPRS attach procedures.

Calculation

```
vsum(MM_AttGprsAttach_U_RP6,sum(RoutingArea,MM_AttGprsAttach_U))
```

MM_AttPsPagingProcIu

Attempted UMTS PS paging procedures.

Calculation

```
vsum(MM_AttPsPagingProcIu_0302,sum(RoutingArea,MM_AttPsPagingProcIu))
```

MM_NbrPsPagingMesIu

Number of PS paging message sends from 3G-SGSN to the MS

Calculation

```
vsum(MM_NbrPsPagingMesIu_0302,sum(RoutingArea,MM_NbrPsPagingMesIu))
```

MM_SuccGprsAttach_U

Successful GPRS attach procedures

Calculation

```
vsum(MM_SuccGprsAttach_U_RP6,sum(RoutingArea,MM_SuccGprsAttach_U))
```

MM_SuccPsPagingProcIu

Successful UMTS PS paging procedures

Calculation

```
vsum(MM_SuccPsPagingProcIu_0302,sum(RoutingArea,MM_SuccPsPagingProcIu))
```

Mobile_initiated_PDP_context_deactivation_failure_rate

This indicator calculates the failure rate of PDP context deactivation procedures initiated by a UE.

Calculation

```
vsum (SM_AttDeactPdpContextMs_U, -1.0 * SM_SuccDeactPdpContextMs_U, 0) *
100.0 / SM_AttDeactPdpContextMs_U
```

Mobile_initiated_PDP_context_deactivation_success_rate

This indicator calculates the success rate of PDP context deactivation procedures initiated by a UE.

Calculation

```
SM_SuccDeactPdpContextMs_U * 100.0 / SM_AttDeactPdpContextMs_U
```

Mobile_originating_point_to_point_SMS_failure_rate

This indicator calculates the failure rate of mobile originated point-to-point short messages sent.

Calculation

```
vsum (SMS_AttMoPS_U, -1.0 * SMS_SuccMoPS_U, 0) * 100.0 / SMS_AttMoPS_U
```

Mobile_Originating_SMS_Success_Rate

Mobile Originating SMS Success Rate defines the percentage of mobile originated packet switched SMS procedures that were successfully completed.

Calculation

```
SMS_SuccMoPS_U * 100.0 / SMS_AttMoPS_U
```

Mobile_Origination_Session_Modification_Success_Rate

Mobile Origination Session Modification Success Rate is the percentage of mobile originated attempted data session modification procedures that were successful.

Calculation

```
SM_SuccModPdpContextMs_U * 100.0 / SM_AttModPdpContextMs_U
```

Mobile_terminated_point_to_point_SMS_failure_rate

This indicator calculates the failure rate of mobile terminated point-to-point short messages sent.

Calculation

```
vsum (SMS_AttMtPS_U, -1.0 * SMS_SuccMtPS_U, 0) * 100.0 / SMS_AttMtPS_U
```

Mobile_Terminating_SMS_Success_Rate

Mobile Terminating SMS Success Rate defines the percentage of mobile terminated packet switched SMS procedures that were successfully completed.

Calculation

```
SMS_SuccMtPS_U * 100.0 / SMS_AttMtPS_U
```

MS_memory_available_notification_failure_rate

This indicator calculates the failure rate of the SGSN informing the HLR that the UE is available for receiving short messages once again.

Calculation

```
vsum (SMS_AttMemoryAvailablePS_U, -1.0 * SMS_SuccMemoryAvailablePS_U, 0) *
100.0 / SMS_AttMemoryAvailablePS_U
```

MS_memory_available_notification_success_rate

This indicator calculates the success rate of the SGSN informing the HLR that the UE is available for receiving short messages once again.

Calculation

```
SMS_SuccMemoryAvailablePS_U * 100.0 / SMS_AttMemoryAvailablePS_U
```

MSU_retransmission_success_rate

This indicator calculates the retransmission rate of Message Signal Units (MSUs).

Calculation

```
msuRetransmitted * 100.0 / msuTransmitted
```

Network_Origination_Session_Modification_Success_Rate

Network Origination Session Modification Success Rate is the percentage of network originated attempted data session modification procedures that were successful.

Calculation

```
SM_SuccModPdpContextSgsn_U * 100.0 / SM_AttModPdpContextSgsn_U
```

NUMDAYS

of days in Report

Calculation

```
DAYSINREPORT()
```

NUMHOURS

of hours in Summation Data

Calculation

Paging_Success_Rate

Paging Success Rate defines the rate of successful paging in the packet network. This KPI includes both initial paging attempts and retries.

Calculation

```
vsum (MM_SuccPsPagingProcIu, succPsPagingRepititionsIu, 0) * 100.0 / vsum
(MM_AttPsPagingProcIu, attPsPagingRepititionsIu)
```

PDP_context_activation_failure_rate

This indicator calculates the failure rate of PDP context activation procedures initiated by a UE including requests for dynamic and static IP addresses.

Calculation

```
vsum (SM_AttActPdpContext_U, -1.0 * SM_SuccActPdpContext_U, 0) * 100.0 /
SM_AttActPdpContext_U
```

PDP_context_activation_for_dynamic_IP_address_failure_rate

This indicator calculates the failure rate of PDP context activation procedures initiated by a UE including requests for dynamic IP addresses.

Calculation

```
vsum (SM_AttActPdpContextDyn_U, -1.0 * SM_SuccActPdpContextDyn_U, 0) *
100.0 / SM_AttActPdpContextDyn_U
```

PDP_context_activation_for_dynamic_IP_address_success_rate

This indicator calculates the success rate of PDP context activation procedures initiated by a UE including requests for dynamic IP addresses.

Calculation

```
SM_SuccActPdpContextDyn_U * 100.0 / SM_AttActPdpContextDyn_U
```

PDP_context_activation_for_static_IP_address_failure_rate

This indicator calculates the failure rate of PDP context activation procedures initiated by a UE including requests for static IP addresses.

Calculation

```
vsum (SM_AttActPdpContext_U, -1.0 * SM_AttActPdpContextDyn_U, -1.0 *
SM_SuccActPdpContext_U, SM_SuccActPdpContextDyn_U, 0) * 100.0 / vsum
(SM_AttActPdpContext_U, -1.0 * SM_AttActPdpContextDyn_U)
```

PDP_context_activation_for_static_IP_address_success_rate

This indicator calculates the success rate of PDP context activation procedures initiated by a UE including requests for static IP addresses.

Calculation

```
vsum (SM_SuccActPdpContext_U, -1.0 * SM_SuccActPdpContextDyn_U, 0) * 100.0
/ vsum (SM_AttActPdpContext_U, -1.0 * SM_AttActPdpContextDyn_U)
```

PDP_context_activation_success_rate

This indicator calculates the success rate of PDP context activation procedures initiated by a UE including requests for dynamic and static IP addresses.

Calculation

```
SM_SuccActPdpContext_U * 100.0 / SM_AttActPdpContext_U
```

PDP_Retainability_Rate

Retainability measures the users ability to maintain the connection (PDP context), until they decide to end it. It tracks the number of abnormal deactivations occurring in the network. PDP Retainability Rate measures the percentage of abnormal deactivations occurring in the network.

Calculation

```
vsum (SM_AttDeactPdpContextSgsn_36, SM_AttDeactPdpContextSgsn_38,
SM_AttDeactPdpContextSgsn_39, SM_AttDeactPdpContextSgsn_8, 0) * 100.0 /
SM_SuccActPdpContext_U
```

PTMSI_reallocation_failure_rate

This indicator calculates the failure rate of P-TMSI reallocation initiated by the SGSN.

Calculation

```
vsum (SEC_AttPTMSIRealloc_U, -1.0 * SEC_SuccPTMSIRealloc_U, 0) * 100.0 /
SEC_AttPTMSIRealloc_U
```

PTMSI_reallocation_success_rate

This indicator calculates the success rate of P-TMSI reallocation initiated by the SGSN.

Calculation

```
SEC_SuccPTMSIRealloc_U * 100.0 / SEC_AttPTMSIRealloc_U
```

rab_AttEstab_Bgrd

The number of RAB setup requests that SGSN sends RNC per background traffic class

Calculation

```
vsum(rab_AttEstab_Bgrd_RP6,sum(ServiceArea,rab_AttEstab_Bgrd))
```

rab_AttEstab_Conv

The number of RAB setup requests that SGSN sends RNC per conversational traffic class

Calculation

```
vsum(rab_AttEstab_Conv_RP6,sum(ServiceArea,rab_AttEstab_Conv))
```

rab_AttEstab_Intact

The number of RAB setup requests that SGSN sends RNC per interactive traffic class

Calculation

```
vsum(rab_AttEstab_Intact_RP6,sum(ServiceArea,rab_AttEstab_Intact))
```

rab_AttEstab_Strm

The number of RAB setup requests that SGSN sends RNC per streaming traffic class

Calculation

```
vsum(rab_AttEstab_Strm_RP6,sum(ServiceArea,rab_AttEstab_Strm))
```

rab_SuccEstab_Bgrd

The number of successfully established RAB connections as responded by RNC per background traffic class

Calculation

```
vsum(rab_SuccEstab_Bgrd_RP6,sum(ServiceArea,rab_SuccEstab_Bgrd))
```

rab_SuccEstab_Conv

The number of successfully established RAB connections as responded by RNC per conversational traffic class

Calculation

```
vsum(rab_SuccEstab_Conv_RP6,sum(ServiceArea,rab_SuccEstab_Conv))
```

rab_SuccEstab_Intact

The number of successfully established RAB connections as responded by RNC per interactive traffic class

Calculation

```
vsum(rab_SuccEstab_Intact_RP6,sum(ServiceArea,rab_SuccEstab_Intact))
```

rab_SuccEstab_Strm

The number of successfully established RAB connections as responded by RNC per streaming traffic class

Calculation

```
vsum(rab_SuccEstab_Strm_RP6,sum(ServiceArea,rab_SuccEstab_Strm))
```

RNC_initiated_PS_background_RAB_modification_success_rate

This indicator calculates the success rate of RNC initiated PS background RAB modification

Calculation

```
SM_SuccBgrdRabModRnc_U * 100.0 / SM_AttBgrdRabModRnc_U
```

RNC_initiated_PS_conversational_RAB_modification_success_rate

This indicator calculates the success rate of RNC initiated PS conversational RAB modification

Calculation

```
SM_SuccConvRabModRnc_U * 100.0 / SM_AttConvRabModRnc_U
```

RNC_initiated_PS_interactive_RAB_modification_success_rate

This indicator calculates the success rate of RNC initiated PS interactive RAB modification

Calculation

```
SM_SuccIntactRabModRnc_U * 100.0 / SM_AttIntactRabModRnc_U
```

RNC_initiated_PS_streaming_RAB_modification_success_rate

This indicator calculates the success rate of RNC initiated PS streaming RAB modification

Calculation

```
SM_SuccStrmRabModRnc_U * 100.0 / SM_AttStrmRabModRnc_U
```

RNC_initiated_SCCP_connection_setup_failure_rate

This indicator calculates the failure rate of SCCP connection setup procedures between the RNC and SGSN that are initiated by the RNC.

Calculation

```
vsum (iupsAttSetupProcedures, -1.0 * iupsSuccSetupProcedures, 0) * 100.0 /
iupsAttSetupProcedures
```

RNC_initiated_SCCP_connection_setup_success_rate

This indicator calculates the success rate of SCCP connection setup procedures between the RNC and SGSN that are initiated by the RNC.

Calculation

```
iupsSuccSetupProcedures * 100.0 / iupsAttSetupProcedures
```

Security_Mode_Success_Rate

Security Mode Success Rate defines the percentage of security mode procedures that were successfully completed.

Calculation

```
SEC_SuccSecMode * 100.0 / SEC_AttSecMode
```

Session_Establishment_Success_Rate

Session Establishment Success Rate is the percentage of attempted data session activations that were successful.

Calculation

```
SM_SuccActPdpContext_U * 100.0 / SM_AttActPdpContext_U
```

SGSN_initiated_GPRS_detach_failure_rate

This indicator calculates the failure rate of GPRS detach procedures initiated by the SGSN.

Calculation

```
vsum (MM_AttGprsDetachSgsn_U, -1.0 * MM_SuccGprsDetachSgsn_U, 0) * 100.0 /
MM_AttGprsDetachSgsn_U
```

SGSN_initiated_GPRS_detach_success_rate

This indicator calculates the success rate of GPRS detach procedures initiated by the SGSN.

Calculation

```
MM_SuccGprsDetachSgsn_U * 100.0 / MM_AttGprsDetachSgsn_U
```

SGSN_initiated_interSGSN_RA_update_failure_rate

This indicator calculates the failure rate of inter-SGSN routing area updates initiated by the SGSN.

Calculation

```
vsum (MM_AttInterSgsnRaUpdate_U, -1.0 * MM_SuccInterSgsnRaUpdate_U, 0) *
100.0 / MM_AttInterSgsnRaUpdate_U
```

SGSN_initiated_intraSGSN_RA_update_failure_rate

This indicator calculates the failure rate of intra-SGSN routing area updates initiated by the SGSN.

Calculation

```
vsum (MM_AttIntraSgsnRaUpdate_U, -1.0 * MM_SuccIntraSgsnRaUpdate_U, 0) *
100.0 / MM_AttIntraSgsnRaUpdate_U
```

succPsPagingRepititionsIu

Successful UMTS PS paging repetitions

Calculation

```
vsum(succPsPagingRepititionsIu_0302,sum(RoutingArea,succPsPagingRepiti-
tionsIu))
```

SGSN_Server Peg Counts

The following is a list of peg counts for the SGSN_Server entity.

attAuthInSgsn

The number of authentication procedures attempted by the SGSN. (CP IUPS)

Data Source

SGSN_Server

Source Field

attAuthInSgsn

Source Section

CPSuccessFail

attDefMTLocReq

Number of Deferred MT-LR (Deferred Mobile Terminating Location Requests)

Data Source

SGSN_Server

Source Field

attDefMTLocReq

Source Section

PMLocationServices

attDnsReq

Incremented when the SGSN sends a resolution request to the DNS server.

Data Source

SGSN_Server

Source Field

attDnsReq

Source Section

CPSuccessFail

attMOLocReq

Number of MO-LR (Mobile Originated Location Requests)

Data Source

SGSN_Server

Source Field

attMOLocReq

Source Section

PMLocationServices

attMTLocReq

Number of MT-LR (Mobile Terminated Location Requests)

Data Source

SGSN_Server

Source Field

attMTLocReq

Source Section

PMLocationServices

attPeriodicIntraRau

Number of intra-SGSN Periodic RAU messages received at SGSN CP.

Data Source

SGSN_Server

Source Field

attPeriodicIntraRau

Source Section

CPSuccessFail

attRabRelease

The number RAB release requests received from RNC for releasing RAB connections

Data Source

SGSN_Server

Source Field

attRabRelease

Source Section

CPSuccessFail

attSeqNumOrdReq

The number of attempted GTP sequence numbers received by the SGSN when Order=yes.

Data Source

SGSN_Server

Source Field

attSeqNumOrdReq

Source Section

CPSuccessFail

autoDownTime

Duration of automatic link OOS including duration of declared failure. Accumulates the automatic downtime of a link.

Data Source

SGSN_Server

Source Field

autoDownTime

Source Section

SPSuccessFail

autoLinkChangeFar

Number of automatic link changeovers initiated by the far end side.

Data Source

SGSN_Server

Source Field

autoLinkChangeFar

Source Section

SPSuccessFail

autoLinkChangeNear

Number of automatic link changeovers initiated by the near end side.

Data Source

SGSN_Server

Source Field

autoLinkChangeNear

Source Section

SPSuccessFail

averageCpuUsage

The average percent CPU usage over a granularity period. CP or SP

Data Source

SGSN_Server

Source Field

averageCpuUsage

Source Section

APSystemResources

averageMemoryUsage

The average percent memory usage over a granularity period. (PM for CP or SP)

Data Source

SGSN_Server

Source Field

averageMemoryUsage

Source Section

APSystemResources

averageTidUsage

Average percentage of TCAP Transaction IDs that are used for MAP procedure processing.

Data Source

SGSN_Server

Source Field

averageTidUsage

Source Section

CPDerived

controlledAuthAttach

The number of Authentication/Ciphering procedures under the control of SGSN Procedure Handling Enhancements feature during processing mobile Attach procedure.

Data Source

SGSN_Server

Source Field

controlledAuthAttach

Source Section

CPSuccessFail

controlledAuthDataServiceReq

The number of Authentication/Ciphering procedures under the control of SGSN Procedure Handling Enhancements feature during processing Service Request procedure with type "Data".

Data Source

SGSN_Server

Source Field

controlledAuthDataServiceReq

Source Section

CPSuccessFail

controlledAuthDetach

The number of Authentication/Ciphering procedures under the control of SGSN Procedure Handling Enhancements feature during processing mobile Detach procedure.

Data Source

SGSN_Server

Source Field

controlledAuthDetach

Source Section

CPSuccessFail

controlledAuthInterRau

The number of Authentication/Ciphering requests under the control of SGSN Procedure Handling Enhancements feature during processing inter-SGSN Routing Area Update procedure.

Data Source

SGSN_Server

Source Field

controlledAuthInterRau

Source Section

CPSuccessFail

controlledAuthIntraRau

The number of Authentication/Ciphering procedures under the control of SGSN Procedure Handling Enhancements feature during processing intra-SGSN Routing Area Update procedure.

Data Source

SGSN_Server

Source Field

controlledAuthIntraRau

Source Section

CPSuccessFail

controlledAuthPagingServiceReq

The number of Authentication/Ciphering procedures under the control of SGSN Procedure Handling Enhancements feature during processing Service Request procedure with type "Paging Response".

Data Source

SGSN_Server

Source Field

controlledAuthPagingServiceReq

Source Section

CPSuccessFail

controlledAuthSigServiceReq

The number of Authentication/Ciphering procedures under the control of SGSN Procedure Handling Enhancements feature during processing Service Request procedure with type "Signalling".

Data Source

SGSN_Server

Source Field

controlledAuthSigServiceReq

Source Section

CPSuccessFail

controlledIdCheckInterRau

The number of Identity Check procedures under the control of SGSN Procedure Handling Enhancements feature during processing inter-SGSN Routing Area Update procedure when retrieving IMEI-SV or IMEI from UE is required.

Data Source

SGSN_Server

Source Field

controlledIdentityCheckInterRau

Source Section

CPSuccessFail

controlledIdentityCheckAttach

The number of Identity Check procedures under the control of SGSN Procedure Handling Enhancements feature during processing mobile Attach procedure when retrieving IMEI-SV or IMEI from UE is required.

Data Source

SGSN_Server

Source Field

controlledIdentityCheckAttach

Source Section

CPSuccessFail

Data_interval

Data interval for the SGSN data collection in seconds. It is taken from the <gp> tag value from IPData section in the SGSN XML data file.

Data Source

SGSN_Server

Source Field

<gp> tag value

Source Section

IPData

diskUsagePart1

The percent of disk space used for the first disk partition

Data Source

SGSN_Server

Source Field

diskUsagePart1

Source Section

APSystemResources

diskUsagePart2

The percent of disk space used for the second disk partition

Data Source

SGSN_Server

Source Field

diskUsagePart2

Source Section

APSystemResources

diskUsagePart3

The percent of disk space used for the third disk partition

Data Source

SGSN_Server

Source Field

diskUsagePart3

Source Section

APSystemResources

diskUsagePart4

The percent of disk space used for the fourth disk partition

Data Source

SGSN_Server

Source Field

diskUsagePart4

Source Section

APSystemResources

diskUsagePart5

The percent of disk space used for the fifth disk partition

Data Source

SGSN_Server

Source Field

diskUsagePart5

Source Section

APSystemResources

diskUsagePart6

The percent of disk space used for the sixth disk partition

Data Source

SGSN_Server

Source Field

diskUsagePart6

Source Section

APSystemResources

diskUsagePart7

The percent of disk space used for the seventh disk partition

Data Source

SGSN_Server

Source Field

diskUsagePart7

Source Section

APSystemResources

diskUsagePart8

The percent of disk space used for the eighth disk partition

Data Source

SGSN_Server

Source Field

diskUsagePart8

Source Section

APSystemResources

durationLinkFailures

Duration in seconds of declared link failures, gives downtime of data link

Data Source

SGSN_Server

Source Field

durationLinkFailures

Source Section

SPSuccessFail

dvlrsCreated

The number of D-VLRs created at a serving SGSN.

Data Source

SGSN_Server

Source Field

dvlrsCreated

Source Section

CPSuccessFail

dvlrsDeletedbyHLR

The number of D-VLRs deleted during processing Cancel Location from HLR.

Data Source

SGSN_Server

Source Field

dvlrsDeletedbyHLR

Source Section

CPSuccessFail

dvlrsDetachedDeleted

The number of Detached D-VLRs deleted by Audit.

Data Source

SGSN_Server

Source Field

dvlrsDetachedDeleted

Source Section

CPSuccessFail

dvlrsSCSuspendedDeleted

The number of Super-Charger Suspended D-VLRs deleted by Audit.

Data Source

SGSN_Server

Source Field

dvlrsSCSuspendedDeleted

Source Section

CPSuccessFail

e2eDownSuccRabRestore

The total number of successful End-To-End scenarios for mobile initiated RAB re-establishment for downlink data on SGSN

Data Source

SGSN_Server

Source Field

e2eDownSuccRabRestore

Source Section

E2EPMCounts

e2eSessionDropGTPCPathBroken

The number of End-To-End PS session drops due to GTP-C path broken.

Data Source

SGSN_Server

Source Field

e2eSessionDropGTPCPathBroken

Source Section

E2EPMCounts

e2eSessionDropGTPUPathBroken

The number of End-To-End PS session drops due to GTP-U path broken.

Data Source

SGSN_Server

Source Field

e2eSessionDropGTPUPathBroken

Source Section

E2EPMCounts

e2eSessionDropHlrFail

The number of End-To-End PS session drops due to HLR intervention

Data Source

SGSN_Server

Source Field

e2eSessionDropHlrFail

Source Section

E2EPMCounts

e2eSessionDropIuPSFail

The number of End-To-End PS session drops due to Iu-PS interface error

Data Source

SGSN_Server

Source Field

e2eSessionDropIuPSFail

Source Section

E2EPMCounts

e2eSessionDropMSFail

The number of End-To-End PS session drops due to Mobile initiated PDP context deactivation

Data Source

SGSN_Server

Source Field

e2eSessionDropMSFail

Source Section

E2EPMCounts

e2eSessionDropSgsnFail

The number of End-To-End PS session drops due to network initiated PDP context deactivation

Data Source

SGSN_Server

Source Field

e2eSessionDropSgsnFail

Source Section

E2EPMCounts

e2eSessionDropTPLinkLoss

The number of End-To-End PS session drops due to TP link loss.

Data Source

SGSN_Server

Source Field

e2eSessionDropTPLinkLoss

Source Section

E2EPMCounts

e2eSetupAPNFail

The number of End-To-End PS session setup failures due to missing or unknown APN

Data Source

SGSN_Server

Source Field

e2eSetupAPNFail

Source Section

E2EPMCounts

e2eSetupDnsFail

The number of End-To-End PS session setup failures due to timer expiry while waiting for messages from DNS server

Data Source

SGSN_Server

Source Field

e2eSetupDnsFail

Source Section

E2EPMCounts

e2eSetupGgsnApnAccessFail

The number of End-To-End PS session setup failures encountered while creating GTP tunnel with GGSN due to APN access denied at GGSN

Data Source

SGSN_Server

Source Field

e2eSetupGgsnApnAccessFail

Source Section

E2EPMCounts

e2eSetupGgsnApnFail

The number of End-To-End PS session setup failures encountered while creating GTP tunnel with GGSN due to Missing or unknown APN at GGSN

Data Source

SGSN_Server

Source Field

e2eSetupGgsnApnFail

Source Section

E2EPMCounts

e2eSetupGgsnAuthFail

The number of End-To-End PS session setup failures encountered while creating GTP tunnel with GGSN due to user authentication failed at GGSN

Data Source

SGSN_Server

Source Field

e2eSetupGgsnAuthFail

Source Section

E2EPMCounts

e2eSetupGgsnGtpMsgFail

The number of End-To-End PS session setup failures encountered while creating GTP tunnel with GGSN due to GTP protocol error found at GGSN

Data Source

SGSN_Server

Source Field

e2eSetupGgsnGtpMsgFail

Source Section

E2EPMCounts

e2eSetupGgsnInternalFail

The number of End-To-End PS session setup failures encountered while creating GTP tunnel with GGSN due to GGSN internal error

Data Source

SGSN_Server

Source Field

e2eSetupGgsnInternalFail

Source Section

E2EPMCounts

e2eSetupGgsnNoDynPdpAddrFail

The number of End-To-End PS session setup failures encountered while creating GTP tunnel with GGSN due to all dynamic PDP addresses occupied at GGSN

Data Source

SGSN_Server

Source Field

e2eSetupGgsnNoDynPdpAddrFail

Source Section

E2EPMCounts

e2eSetupGgsnNoPdpFail

The number of End-To-End PS session setup failures encountered while creating GTP tunnel with GGSN due to non-existent PDP context

Data Source

SGSN_Server

Source Field

e2eSetupGgsnNoPdpFail

Source Section

E2EPMCounts

e2eSetupGgsnNoServiceFail

The number of End-To-End PS session setup failures encountered while creating GTP tunnel with GGSN due to service not supported by GGSN

Data Source

SGSN_Server

Source Field

e2eSetupGgsnNoServiceFail

Source Section

E2EPMCounts

e2eSetupGgsnPdpActFail

The number of End-To-End PS session setup failures encountered while creating GTP tunnel with GGSN due to PDP already activated at GGSN

Data Source

SGSN_Server

Source Field

e2eSetupGgsnPdpActFail

Source Section

E2EPMCounts

e2eSetupGgsnPdpFail

The number of End-To-End PS session setup failures encountered while creating GTP tunnel with GGSN due to unknown PDP address or PDP type at GGSN

Data Source

SGSN_Server

Source Field

e2eSetupGgsnPdpFail

Source Section

E2EPMCounts

e2eSetupGgsnPktFilterFail

The number of End-To-End PS session setup failures encountered while creating GTP tunnel with GGSN due to packet filter(s) error at GGSN

Data Source

SGSN_Server

Source Field

e2eSetupGgsnPktFilterFail

Source Section

E2EPMCounts

e2eSetupGgsnTftFail

The number of End-To-End PS session setup failures encountered while creating GTP tunnel with GGSN due to TFT operation error at GGSN

Data Source

SGSN_Server

Source Field

e2eSetupGgsnTftFail

Source Section

E2EPMCounts

e2eSetupGgsnTimerExpFail

The number of End-To-End PS session setup failures due to timer expiry

Data Source

SGSN_Server

Source Field

e2eSetupGgsnTimerExpFail

Source Section

E2EPMCounts

e2eSetupGTPCPathFail

The number of End-To-End PS session setup failure in sending "Create PDP Context Request" to GGSN when GTP-C path is broken.

Data Source

SGSN_Server

Source Field

e2eSetupGTPCPathFail

Source Section

E2EPMCounts

e2eSetupGTPMsgError

The number of End-To-End PS session setup failures due to missing mandatory IE or invalid mandatory IE in the Create/Update PDP Context response.

Data Source

SGSN_Server

Source Field

e2eSetupGTPMsgError

Source Section

E2EPMCounts

e2eSetupInvalidGGSNAddr

The number of End-To-End PS session setup failures due to receiving invalid (all-zero's) GGSN IP address (for control plan or for user plan) in Create PDP Context response.

Data Source

SGSN_Server

Source Field

e2eSetupInvalidGGSNAddr

Source Section

E2EPMCounts

e2eSetupIuLinkFail

The number of End-To-End PS session setup failures due to Iu-ps link problem.

Data Source

SGSN_Server

Source Field

e2eSetupIuLinkFail

Source Section

E2EPMCounts

e2eSetupPdpMsProtFail

The number of End-To-End PS session setup failures due to UE related protocol error

Data Source

SGSN_Server

Source Field

e2eSetupPdpMsProtFail

Source Section

E2EPMCounts

e2eSetupPdpRejectIPV6

The number of End-To-End PS session setup failures due to IPV6 IP address format not supported.

Data Source

SGSN_Server

Source Field

e2eSetupPdpRejectIPV6

Source Section

E2EPMCounts

e2eSetupQoSFail

The number of End-To-End PS session setup failures due to QoS negotiation failure

Data Source

SGSN_Server

Source Field

e2eSetupQoSFail

Source Section

E2EPMCounts

e2eSetupRabFail

The number of End-To-End PS session setup failures

Data Source

SGSN_Server

Source Field

e2eSetupRabFail

Source Section

E2EPMCounts

e2eSetupRejectExceedPDPLimit

The number of End-To-End PS session setup failures due to exceeding the maximum number of PDP contexts allowed.

Data Source

SGSN_Server

Source Field

e2eSetupRejectExceedPDPLimit

Source Section

E2EPMCounts

e2eSetupRejectOverload

The number of End-To-End PS session setup failures due to SGSN in static overload.

Data Source

SGSN_Server

Source Field

e2eSetupRejectOverload

Source Section

E2EPMCounts

e2eSetupSecPDPInvalidPrmPDP

The number of End-To-End PS Secondary PDP Context Activation failures due to the requested linked primary PDP context non-existent, or existent but in a state that does not allow secondary PDP context activation (i.e. being deactivated or modified), or the Secondary PDP context activation attempt linked to a primary PDP using GTP V0 tunnel with GGSN.

Data Source

SGSN_Server

Source Field

e2eSetupSecPDPInvalidPrmPDP

Source Section

E2EPMCounts

e2eSetupTpFail

The number of End-To-End PS session setup failures encountered during allocating or changing PDP Context in TP

Data Source

SGSN_Server

Source Field

e2eSetupTpFail

Source Section

E2EPMCounts

e2eSuccPdpAct

The total number of successful mobile initiated primary or secondary PDP context activation for sending uplink data or receiving downlink data

Data Source

SGSN_Server

Source Field

e2eSuccPdpAct

Source Section

E2EPMCounts

e2eUpSuccRabRestore

The total number of successful End-To-End scenarios for mobile initiated RAB re-establishment for uplink data on SGSN preserved interactive or background PDP context

Data Source

SGSN_Server

Source Field

e2eUpSuccRabRestore

Source Section

E2EPMCounts

GTP_InSigOctGn

Number of octets of incoming GTP signalling packets on the Gn interface

Data Source

SGSN_Server

Source Field

GTP.InSigOctGn

Source Section

CPSuccessFail

GTP_InSigPktGn

Number of incoming GTP signalling packets on the Gn interface

Data Source

SGSN_Server

Source Field

GTP.InSigPktGn

Source Section

CPSuccessFail

GTP_OutSigOctGn

Number of octets of outgoing GTP signalling packets on the Gn interface

Data Source

SGSN_Server

Source Field

GTP.OutSigOctGn

Source Section

CPSuccessFail

GTP_OutSigPktGn

Number of outgoing GTP signalling packets on the Gn interface

Data Source

SGSN_Server

Source Field

GTP.OutSigPktGn

Source Section

CPSuccessFail

invokedAuthAttach

The number of Authentication/Ciphering procedures invoked under the control of SGSN Procedure Handling Enhancements feature during processing mobile Attach procedure.

Data Source

SGSN_Server

Source Field

invokedAuthAttach

Source Section

CPSuccessFail

invokedAuthDataServiceReq

The number of Authentication/Ciphering procedures invoked under the control of SGSN Procedure Handling Enhancements feature during processing Service Request procedure with type "Data".

Data Source

SGSN_Server

Source Field

invokedAuthDataServiceReq

Source Section

CPSuccessFail

invokedAuthDetach

The number of Authentication/Ciphering procedures invoked under the control of SGSN Procedure Handling Enhancements feature during processing mobile Detach procedure.

Data Source

SGSN_Server

Source Field

invokedAuthDetach

Source Section

CPSuccessFail

invokedAuthInterRau

The number of Authentication/Ciphering procedure invoked under the control of SGSN Procedure Handling Enhancements feature during processing inter-SGSN Routing Area Update procedure.

Data Source

SGSN_Server

Source Field

invokedAuthInterRau

Source Section

CPSuccessFail

invokedAuthIntraRau

The number of Authentication/Ciphering procedure invoked under the control of SGSN Procedure Handling Enhancements feature during processing intra-SGSN Routing Area Update procedure.

Data Source

SGSN_Server

Source Field

invokedAuthIntraRau

Source Section

CPSuccessFail

invokedAuthPagingServiceReq

The number of Authentication/Ciphering procedures invoked under the control of SGSN Procedure Handling Enhancements feature during processing Service Request procedure with type "Paging Response".

Data Source

SGSN_Server

Source Field

invokedAuthPagingServiceReq

Source Section

CPSuccessFail

invokedAuthSigServiceReq

The number of Authentication/Ciphering procedures invoked under the control of SGSN Procedure Handling Enhancements feature during processing Service Request procedure with type "Signalling".

Data Source

SGSN_Server

Source Field

invokedAuthSigServiceReq

Source Section

CPSuccessFail

invokedIdentityCheckAttach

The number of Identify Check procedures invoked under the control of SGSN Procedure Handling Enhancements feature during processing mobile Attach procedure when retrieving IMEI-SV or IMEI from UE is required.

Data Source

SGSN_Server

Source Field

invokedIdentityCheckAttach

Source Section

CPSuccessFail

invokedIdentityCheckInterRau

The number of Identify Check procedures invoked under the control of SGSN Procedure Handling Enhancements feature during processing inter-SGSN Routing Area Update procedure when retrieving IMEI-SV or IMEI from UE is required.

Data Source

SGSN_Server

Source Field

invokedIdentityCheckInterRau

Source Section

CPSuccessFail

ipFragCreates

The number of IP datagram fragments that have been generated as a result of fragmentation this entity.

Data Source

SGSN_Server

Source Field

ipFragCreates

Source Section

IPData

ipFragFails

The number of IP datagrams that have been discarded because they needed to be fragmented at this entity but could not be.

Data Source

SGSN_Server

Source Field

ipFragFails

Source Section

IPData

ipFragOKs

The number of IP datagrams that have been successfully fragmented at this entity.

Data Source

SGSN_Server

Source Field

ipFragOKs

Source Section

IPData

ipInAddrErrors

The number of input datagrams discarded because the IP address in their IP header's destination field was not a valid address to be received at this entity

Data Source

SGSN_Server

Source Field

ipInAddrErrors

Source Section

IPData

ipInDelivers

The total number of input datagrams successfully delivered to IP user-protocols (including ICMP).

Data Source

SGSN_Server

Source Field

ipInDelivers

Source Section

IPData

ipInDiscards

The number of input IP datagrams for which no problems were encountered to prevent their continued processing, but which were discarded (e.g., for lack of buffer space)

Data Source

SGSN_Server

Source Field

ipInDiscards

Source Section

IPData

ipInHdrErrors

The number of input datagrams discarded due to errors in their IP headers

Data Source

SGSN_Server

Source Field

ipInHdrErrors

Source Section

IPData

ipInReceives

The total number of input datagrams received from interfaces, including those received in error

Data Source

SGSN_Server

Source Field

ipInReceives

Source Section

IPData

ipInUnknownProtos

The number of locally-addressed datagrams received successfully but discarded because of an unknown or unsupported protocol.

Data Source

SGSN_Server

Source Field

ipInUnknownProtos

Source Section

IPData

ipOutDiscards

The number of output IP datagrams for which no problem was encountered to prevent their transmission to their destination, but which were discarded (e.g., for lack of buffer space).

Data Source

SGSN_Server

Source Field

ipOutDiscards

Source Section

IPData

ipOutNoRoutes

The number of IP datagrams discarded because no route could be found to transmit them to their destination.

Data Source

SGSN_Server

Source Field

ipOutNoRoutes

Source Section

IPData

ipOutRequests

The total number of IP datagrams which local IP user-protocols (including ICMP) supplied to IP in requests for transmission. Note that this counter does not include any datagrams counted in ipForwDatagrams.

Data Source

SGSN_Server

Source Field

ipOutRequests

Source Section

IPData

ipReasmFails

The number of failures detected by the IP re-assembly algorithm (for whatever reason: timed out, errors, etc)

Data Source

SGSN_Server

Source Field

ipReasmFails

Source Section

IPData

ipReasmOKs

The number of IP datagrams successfully re-assembled.

Data Source

SGSN_Server

Source Field

ipReasmOKs

Source Section

IPData

ipReasmReqds

The number of IP fragments received which needed to be reassembled at this entity

Data Source

SGSN_Server

Source Field

ipReasmReqds

Source Section

IPData

iupsAttSetupProcedures

Number of setup procedures attempted by the RNC. A setup procedure is initiated by the RNC to establish communications with an SGSN. (aggregated CP RANAP)

Data Source

SGSN_Server

Source Field

iupsAttSetupProcedures

Source Section

CPSuccessFail

iupsSuccSetupProcedures

Number of successful setup procedures attempted by the RNC. A setup procedure is initiated by the RNC to establish communications with an SGSN. (aggregated CP RANAP)

Data Source

SGSN_Server

Source Field

iupsSuccSetupProcedures

Source Section

CPSuccessFail

lcsmocdrRecordsGenerated

Number of LCS-MO-CDR records generated for Mobile Originated LCS

Data Source

SGSN_Server

Source Field

lcsmocdrRecordsGenerated

Source Section

CDRGenerated

lcsmocdrRecordsSent

Number of LCS-MO-CDR records sent from SGSN to CGF for Mobile Originated LCS

Data Source

SGSN_Server

Source Field

lcsmocdrRecordsSent

Source Section

CGFSent

lcsmtcdrRecordsGenerated

Number of LCS-MT-CDR records generated for Mobile Terminated LCS

Data Source

SGSN_Server

Source Field

lcsmtcdrRecordsGenerated

Source Section

CDRGenerated

lcsmtcdrRecordsSent

Number of LCS-MT-CDR records sent from SGSN to CGF for Mobile Terminated LCS

Data Source

SGSN_Server

Source Field

lcsmtcdrRecordsSent

Source Section

CGFSent

lcsnicdrRecordsGenerated

Number of LCS-NI-CDR records generated for Network Induced LCS

Data Source

SGSN_Server

Source Field

lcsnicdrRecordsGenerated

Source Section

CDRGenerated

lcsnicdrRecordsSent

Number of LCS-NI-CDR records sent from SGSN to CGF for Network Induced LCS

Data Source

SGSN_Server

Source Field

lcsnicdrRecordsSent

Source Section

CGFSent

maxActivePdpinSgsnWithCosBackground

The Maximum number of pdp contexts, over the interval, with a CoS of Background.

Data Source

SGSN_Server

Source Field

maxActivePdpinSgsnWithCosBackground

Source Section

CPDerived

maxActivePdpinSgsnWithCosConversational

The Maximum number of pdp contexts, over the measurement interval, with a CoS of Conversational.

Data Source

SGSN_Server

Source Field

maxActivePdpinSgsnWithCosConversational

Source Section

CPDerived

maxActivePdpinSgsnWithCosInteractive

The Maximum number of pdp contexts, over the interval, with a CoS of Interactive.

Data Source

SGSN_Server

Source Field

maxActivePdpinSgsnWithCosInteractive

Source Section

CPDerived

maxActivePdpinSgsnWithCosStreaming

The Maximum number of subscribers, over the measurement interval, with a CoS of Streaming.

Data Source

SGSN_Server

Source Field

maxActivePdpinSgsnWithCosStreaming

Source Section

CPDerived

maximumCpuUsage

The maximum percent CPU usage over a granularity period. CP or SP

Data Source

SGSN_Server

Source Field

maximumCpuUsage

Source Section

APSystemResources

maximumMemoryUsage

The maximum percent memory usage over a granularity period. (PM for CP or SP)

Data Source

SGSN_Server

Source Field

maximumMemoryUsage

Source Section

APSystemResources

maxNbrAttachedSub

The maximum number of subscribers Attached to the SGSN over a granularity period.

Data Source

SGSN_Server

Source Field

maxNbrAttachedSub

Source Section

CPDerived

maxNbrOfSubConnected

The maximum number of subscribers in the "connected" state. (derived CP)

Data Source

SGSN_Server

Source Field

maxNbrOfSubConnected

Source Section

CPDerived

maxNbrOfSubIdle

The maximum number of subscribers in the "idle" state. (derived CP)

Data Source

SGSN_Server

Source Field

maxNbrOfSubIdle

Source Section

CPDerived

maxSubsWithActivePdpInSgsn

Maximimum number of subscribers with an active PDP context in the SGSN

Data Source

SGSN_Server

Source Field

maxSubsWithActivePdpInSgsn

Source Section

CPDerived

maxUsedTids

Maximum number value of TCAP Transaction IDs that are currently used for MAP procedure processing.

Data Source

SGSN_Server

Source Field

maxUsedTids

Source Section

CPDerived

mcdrRecordsGenerated

Number of M-CDR records generated by connection processing in the SGSN. (CP)

Data Source

SGSN_Server

Source Field

mcdrRecordsGenerated

Source Section

CDRGenerated

mcdrRecordsSent

Number of M-CDR records sent from the SGSN to the CGF. (CP)

Data Source

SGSN_Server

Source Field

mcdrRecordsSent

Source Section

CGFSent

meanActivePdpinSgsnWithCosBackground

The average number of pdp contexts, over the measurement interval, with a CoS of Background.

Data Source

SGSN_Server

Source Field

meanActivePdpinSgsnWithCosBackground

© Copyright IBM Corp. 1999, 2009. All rights reserved.

Source Section

CPDerived

meanActivePdpinSgsnWithCosConversational

The average number of pdp contexts, over the measurement interval, with a CoS of Conversational.

Data Source

SGSN_Server

Source Field

meanActivePdpinSgsnWithCosConversational

Source Section

CPDerived

meanActivePdpinSgsnWithCosInteractive

The average number of pdp contexts, over the measurement interval, with a CoS of Interactive.

Data Source

SGSN_Server

Source Field

meanActivePdpinSgsnWithCosInteractive

Source Section

CPDerived

meanActivePdpinSgsnWithCosStreaming

The average number of pdp contexts, over the measurement interval, with a CoS of Streaming.

Data Source

SGSN_Server

Source Field

meanActivePdpinSgsnWithCosStreaming

Source Section

CPDerived

meanNbrOfSubConnected

The mean number of subscribers in the "connected" state. (derived CP)

Data Source

SGSN_Server

Source Field

meanNbrOfSubConnected

Source Section

CPDerived

meanNbrOfSubIdle

The mean number of subscribers in the "idle" state. (derived CP)

Data Source

SGSN_Server

Source Field

meanNbrOfSubIdle

Source Section

CPDerived

MM_AttCancelLocHlrOp

Attempted CancelLocation requests received from an HLR-operator, in case of a HLR-initiated Detach

Data Source

SGSN_Server

Source Field

MM.AttCancelLocHlrOp

© Copyright IBM Corp. 1999, 2009. All rights reserved.

Source Section

CPSuccessFail

MM_AttCancelLocHlrSgsnChg

Attempted CancelLocation requests received from a HLR due to a SGSN-change (previous SGSN)

Data Source

SGSN_Server

Source Field

MM.AttCancelLocHlrSgsnChg

Source Section

CPSuccessFail

MM_AttGprsDetachMs_U

Attempted GPRS detach procedures initiated by MS.

Data Source

SGSN_Server

Source Field

MM.AttGprsDetachMs.U

Source Section

CPSuccessFail

MM_AttGprsDetachSgsn_U

Attempted GPRS detach procedures initiated by SGSN.

Data Source

SGSN_Server

Source Field

MM.AttGprsDetachSgsn.U

Source Section

CPSuccessFail

MM_AttImsiDetachMs_U

Attempted IMSI detach procedures initiated by MS

Data Source

SGSN_Server

Source Field

MM.AttImsiDetachMs.U

Source Section

CPSuccessFail

MM_AttInsertSubscrDataHlrUpdLoc

Attempted InsertSubscriberData requests received from a HLR during GPRS Update Location procedure

Data Source

SGSN_Server

Source Field

MM.AttInsertSubscrDataHlrUpdLoc

Source Section

CPSuccessFail

MM_AttInterSgsnRaUpdate_U

Attempted inter-SGSN Routing Area update procedures.

Data Source

SGSN_Server

Source Field

MM.AttInterSgsnRaUpdate.U

© Copyright IBM Corp. 1999, 2009. All rights reserved.

Source Section

CPSuccessFail

MM_AttIntraSgsnRaUpdate_U

Attempted intra-SGSN Routing Area update procedures.

Data Source

SGSN_Server

Source Field

MM.AttIntraSgsnRaUpdate.U

Source Section

CPSuccessFail

MM_AttResetHlr

Attempted Reset requests received from a HLR due to an HLR restart, indicating that a failure occurred

Data Source

SGSN_Server

Source Field

MM.AttResetHlr

Source Section

CPSuccessFail

MM_AttUpdateGprsLocationHlr

Attempted GPRS Update Locations sent to the HLR

Data Source

SGSN_Server

Source Field

MM.AttUpdateGprsLocationHlr

Source Section

CPSuccessFail

MM_MeanNbrAttachedSub_U

Mean number of attached subscribers.

Data Source

SGSN_Server

Source Field

MM.MeanNbrAttachedSub.U

Source Section

CPDerived

MM_MeanNbrHomeSub_U

Mean Number of home subscribers

Data Source

SGSN_Server

Source Field

MM.MeanNbrHomeSub.U

Source Section

CPDerived

MM_MeanNbrVisitingForeign_U

Mean Number of visiting foreign subscribers

Data Source

SGSN_Server

Source Field

MM.MeanNbrVisitingForeign.U

Source Section

CPDerived

© Copyright IBM Corp. 1999, 2009. All rights reserved.

MM_MeanNbrVisitingNatSub_U

Mean Number of visiting national subscribers

Data Source

SGSN_Server

Source Field

MM.MeanNbrVisitingNatSub.U

Source Section

CPDerived

MM_NbrActAttachedSub_U

Number of attached subscribers.

Data Source

SGSN_Server

Source Field

MM.NbrActAttachedSub.U

Source Section

CPSuccessFail

MM_NbrHomeSub_U

Number of home subscribers

Data Source

SGSN_Server

Source Field

MM.NbrHomeSub.U

Source Section

CPSuccessFail

MM_NbrPTMSIDetachFail_U

Number of received invalid P-TMSIs during detach

Data Source

SGSN_Server

Source Field

MM.NbrPTMSIDetachFail.U

Source Section

CPSuccessFail

MM_NbrSubPmmConnected

Number of subscribers in PMM-CONNECTED state.

Data Source

SGSN_Server

Source Field

MM.NbrSubPmmConnected

Source Section

CPSuccessFail

MM_NbrSubPmmIdle

Number of subscribers in PMM-IDLE state.

Data Source

SGSN_Server

Source Field

MM.NbrSubPmmIdle

Source Section

CPSuccessFail

MM_NbrVisitingForeign_U

Number of visiting foreign subscribers

Data Source

SGSN_Server

© Copyright IBM Corp. 1999, 2009. All rights reserved.

Source Field

MM.NbrVisitingForeign.U

Source Section

CPSuccessFail

MM_NbrVisitingNatSub_U

Number of visiting national subscribers

Data Source

SGSN_Server

Source Field

MM.NbrVisitingNatSub.U

Source Section

CPSuccessFail

MM_SuccGprsDetachSgsn_U

Successful GPRS detach procedures initiated by SGSN

Data Source

SGSN_Server

Source Field

MM.SuccGprsDetachSgsn.U

Source Section

CPSuccessFail

MM_SuccInterSgsnRaUpdate_U

Successful inter-SGSN Routing Area update procedures

Data Source

SGSN_Server

Source Field

MM.SuccInterSgsnRaUpdate.U

Source Section

CPSuccessFail

MM_SuccIntraSgsnRaUpdate_U

Successful intra-SGSN Routing Area update procedures

Data Source

SGSN_Server

Source Field

MM.SuccIntraSgsnRaUpdate.U

Source Section

CPSuccessFail

MM_SuccUpdateGprsLocationHlr

Successful GPRS Update Locations sent to the HLR

Data Source

SGSN_Server

Source Field

MM.SuccUpdateGprsLocationHlr

Source Section

CPSuccessFail

msuBytesReceived

Number of Message Signal Unit (MSU) bytes received.

Data Source

SGSN_Server

Source Field

msuBytesReceived

Source Section

SPSuccessFail

© Copyright IBM Corp. 1999, 2009. All rights reserved.

msuBytesTransmitted

Number of MSU bytes transmitted.

Data Source

SGSN_Server

Source Field

msuBytesTransmitted

Source Section

SPSuccessFail

msuReceived

Number of MSUs received.

Data Source

SGSN_Server

Source Field

msuReceived

Source Section

SPSuccessFail

msuRetransmitted

Number of MSUs retransmitted, excluding flags.

Data Source

SGSN_Server

Source Field

msuRetransmitted

Source Section

SPSuccessFail

msuTransmitted

Number of MSUs transmitted, including retransmissions.

Data Source

SGSN_Server

Source Field

msuTransmitted

Source Section

SPSuccessFail

nbrActivePdpinSgsnWithCosBackground

The current number of pdp contexts with a CoS of Background.

Data Source

SGSN_Server

Source Field

nbrActivePdpinSgsnWithCosBackground

Source Section

CPSuccessFail

nbrActivePdpinSgsnWithCosConversational

The current number of pdp contexts with a CoS of Conversational.

Data Source

SGSN_Server

Source Field

nbrActivePdpinSgsnWithCosConversational

Source Section

CPSuccessFail

nbrActivePdpinSgsnWithCosInteractive

The current number of pdp contexts with a CoS of Interactive.

Data Source

SGSN_Server

© Copyright IBM Corp. 1999, 2009. All rights reserved.

Source Field

nbrActivePdpinSgsnWithCosInteractive

Source Section

CPSuccessFail

nbrActivePdpinSgsnWithCosStreaming

The current number of pdp contexts with a CoS of Streaming.

Data Source

SGSN_Server

Source Field

nbrActivePdpinSgsnWithCosStreaming

Source Section

CPSuccessFail

nbrIRIEventsSent

Number of IRI events sent

Data Source

SGSN_Server

Source Field

nbrIRIEventsSent

Source Section

LawfulIntercept

nbrLIGAMsgsReceived

Number of LIGA messages received

Data Source

SGSN_Server

Source Field

nbrLIGAMsgsReceived

Source Section

LawfulIntercept

nbrSurveilledMobiles

Number of surveilled mobiles

Data Source

SGSN_Server

Source Field

nbrSurveilledMobiles

Source Section

LawfulIntercept

numAttachShed

Number of GPRS Attach Request shed by Overload Control

Data Source

SGSN_Server

Source Field

numAttachShed

Source Section

SPSuccessFail

numDetachShed

Number of GPRS Detach Request shed by Overload Control.

Data Source

SGSN_Server

Source Field

numDetachShed

Source Section

SPSuccessFail

© Copyright IBM Corp. 1999, 2009. All rights reserved.

numInterRauNoPdpShed

Number of Inter-SGSN RAU without PDP context shed by Overload Control.

Data Source

SGSN_Server

Source Field

numInterRauNoPdpShed

Source Section

SPSuccessFail

numInterRauPdpShed

Number of Inter-SGSN RAU with PDP context shed by Overload Control.

Data Source

SGSN_Server

Source Field

numInterRauPdpShed

Source Section

SPSuccessFail

numIntraRauNoPdpShed

Number of Intra-SGSN RAU without PDP context shed by Overload Control.

Data Source

SGSN_Server

Source Field

numIntraRauNoPdpShed

Source Section

SPSuccessFail

numIntraRauPdpShed

Number of Intra-SGSN RAU with PDP context shed by Overload Control.

Data Source

SGSN_Server

Source Field

numIntraRauPdpShed

Source Section

SPSuccessFail

numServiceRequestShed

Number of Service Request shed by Overload Control.

Data Source

SGSN_Server

Source Field

numServiceRequestShed

Source Section

SPSuccessFail

pmmLLFailure

During the PMM procedure if the SGSN encounters a lower-layer failure the PMM shall abort the procedure. A record of this occurrence is maintained for service measurements.

Data Source

SGSN_Server

Source Field

pmmLLFailure

Source Section

CPSuccessFail

pri0MessageDiscLink

Priority 0 messages discarded due to level 1 link congestion.

© Copyright IBM Corp. 1999, 2009. All rights reserved.

Data Source

SGSN_Server

Source Field

pri0MessageDiscLink

Source Section

SPSuccessFail

rab_SuccEstabPSSetupTimeMax_Bgrd

The maximum time in miliseconds during each granularity period for a SGSN to establish a background PS RAB connection without queuing

Data Source

SGSN_Server

Source Field

rab.SuccEstabPSSetupTimeMax.Bgrd

Source Section

CPDerived

rab_SuccEstabPSSetupTimeMax_Conv

The maximum time in miliseconds during each granularity period for a SGSN to establish a conversational PS RAB connection without queuing

Data Source

SGSN_Server

Source Field

rab.SuccEstabPSSetupTimeMax.Conv

Source Section

CPDerived

rab_SuccEstabPSSetupTimeMax_Intact

The maximum time in miliseconds during each granularity period for a SGSN to establish an interactive PS RAB connection without queuing

Data Source

SGSN_Server

Source Field

rab.SuccEstabPSSetupTimeMax.Intact

Source Section

CPDerived

rab_SuccEstabPSSetupTimeMax_Strm

The maximum time in miliseconds during each granularity period for a SGSN to establish a streaming PS RAB connection without queuing

Data Source

SGSN_Server

Source Field

rab.SuccEstabPSSetupTimeMax.Strm

Source Section

CPDerived

rab_SuccEstabPSSetupTimeMean_Bgrd

The mean time in miliseconds during each granularity period for a SGSN to establish a background PS RAB connection without queuing

Data Source

SGSN_Server

Source Field

rab.SuccEstabPSSetupTimeMean.Bgrd

Source Section

CPDerived

rab_SuccEstabPSSetupTimeMean_Conv

The mean time in miliseconds during each granularity period for a SGSN to establish a conversational PS RAB connection without queuing

© Copyright IBM Corp. 1999, 2009. All rights reserved.

Data Source

SGSN_Server

Source Field

rab.SuccEstabPSSetupTimeMean.Conv

Source Section

CPDerived

rab_SuccEstabPSSetupTimeMean_Intact

The mean time in miliseconds during each granularity period for a SGSN to establish an interactive PS RAB connection without queuing

Data Source

SGSN_Server

Source Field

rab.SuccEstabPSSetupTimeMean.Intact

Source Section

CPDerived

rab_SuccEstabPSSetupTimeMean_Strm

The mean time in miliseconds during each granularity period for a SGSN to establish a streaming PS RAB connection without queuing

Data Source

SGSN_Server

Source Field

rab.SuccEstabPSSetupTimeMean.Strm

Source Section

CPDerived

rab_SuccEstabPSSetupTimeMin_Bgrd

The minimum time in miliseconds during each granularity period for a SGSN to establish a background PS RAB connection without queuing

Data Source

SGSN_Server

Source Field

rab.SuccEstabPSSetupTimeMin.Bgrd

Source Section

CPDerived

rab_SuccEstabPSSetupTimeMin_Conv

The minimum time in miliseconds during each granularity period for a SGSN to establish a conversational PS RAB connection without queuing

Data Source

SGSN_Server

Source Field

rab.SuccEstabPSSetupTimeMin.Conv

Source Section

CPDerived

rab_SuccEstabPSSetupTimeMin_Intact

The minimum time in miliseconds during each granularity period for a SGSN to establish an interactive PS RAB connection without queuing

Data Source

SGSN_Server

Source Field

rab.SuccEstabPSSetupTimeMin.Intact

Source Section

CPDerived

rab_SuccEstabPSSetupTimeMin_Strm

The minimum time in miliseconds during each granularity period for a SGSN to establish a streaming PS RAB connection without queuing

© Copyright IBM Corp. 1999, 2009. All rights reserved.

Data Source

SGSN_Server

Source Field

rab.SuccEstabPSSetupTimeMin.Strm

Source Section

CPDerived

RELOC_AttInterSGSN

The number of inter 3G-SGSN SRNS Relocation attempts

Data Source

SGSN_Server

Source Field

RELOC.AttInterSGSN

Source Section

CPSuccessFail

RELOC_AttInterSGSNNew

The number of attempts inter 3G-SGSN SRNS Relocation counted in the new 3G-SGSN

Data Source

SGSN_Server

Source Field

RELOC.AttInterSGSNNew

Source Section

CPSuccessFail

RELOC_AttSGSN

The number of intra 3G-SGSN and inter 3G-SGSN SRNS Relocation attempts

Data Source

SGSN_Server

Source Field

RELOC.AttSGSN

Source Section

CPSuccessFail

RELOC_FailInterSGSNExt

The number of failed inter 3G-SGSN SRNS Relocation due to external reasons

Data Source

SGSN_Server

Source Field

RELOC.FailInterSGSNExt

Source Section

CPSuccessFail

RELOC_FailInterSGSNInt

The number of failed inter 3G-SGSN SRNS Relocation due to internal reasons

Data Source

SGSN_Server

Source Field

RELOC.FailInterSGSNInt

Source Section

CPSuccessFail

RELOC_FailIntraSGSNExt

The number of failed intra 3G-SGSN SRNS Relocation due to external reasons

Data Source

SGSN_Server

Source Field

RELOC.FailIntraSGSNExt

© Copyright IBM Corp. 1999, 2009. All rights reserved.

Source Section

CPSuccessFail

RELOC_FailIntraSGSNInt

The number of failed intra 3G-SGSN SRNS Relocation due to internal reasons

Data Source

SGSN_Server

Source Field

RELOC.FailIntraSGSNInt

Source Section

CPSuccessFail

RELOC_SuccInterSGSN

The number of successful Inter 3G-SGSN SRNS Relocation, counted in the old 3G-SGSN

Data Source

SGSN_Server

Source Field

RELOC.SuccInterSGSN

Source Section

CPSuccessFail

RELOC_SuccInterSGSNNew

The number of successful inter 3G-SGSN SRNS Relocation counted in the new 3G-SGSN

Data Source

SGSN_Server

Source Field

RELOC.SuccInterSGSNNew

Source Section

CPSuccessFail

RELOC_SuccIntraSGSN

The number of successful intra 3G-SGSN SRNS Relocation

Data Source

SGSN_Server

Source Field

RELOC.SuccIntraSGSN

Source Section

CPSuccessFail

relocAttIntraSgsn

The number of attempts intra 3G-SGSN SRNS Relocation

Data Source

SGSN_Server

Source Field

relocAttIntraSgsn

Source Section

CPSuccessFail

relocCancelBySrncIntra

The number of intra 3G-SGSN SRNS Relocation canceled by source RNC at serving SGSN

Data Source

SGSN_Server

Source Field

relocCancelBySrncIntra

Source Section

CPSuccessFail

relocCancelBySrncOldSgsn

The number of inter 3G-SGSN SRNS Relocation canceled by source RNC at old SGSN

© Copyright IBM Corp. 1999, 2009. All rights reserved.

Data Source

SGSN_Server

Source Field

relocCancelBySrncOldSgsn

Source Section

CPSuccessFail

relocDisabledIntra

The number of intra 3G-SGSN SRNS Relocation rejected because SRNS relocation is disabled at serving SGSN

Data Source

SGSN_Server

Source Field

relocDisabledIntra

Source Section

CPSuccessFail

relocDisabledOldSgsn

The number of inter 3G-SGSN SRNS Relocation rejected because SRNS relocation is disabled at old SGSN

Data Source

SGSN_Server

Source Field

relocDisabledOldSgsn

Source Section

CPSuccessFail

relocFailAtTrncIntra

The number of intra 3G-SGSN SRNS Relocation processing stopped due to receiving relocation failure response from target RNC

Data Source

SGSN_Server

Source Field

relocFailAtTrncIntra

Source Section

CPSuccessFail

relocFailAtTrncNewSgsn

The number of inter 3G-SGSN SRNS Relocation processing stopped due to receiving relocation failure response from target RNC

Data Source

SGSN_Server

Source Field

relocFailAtTrncNewSgsn

Source Section

CPSuccessFail

relocFailDisabledAtNewSgsn

The number of 3G-SGSN SRNS Relocation rejected because SRNS relocation is disabled at new SGSN

Data Source

SGSN_Server

Source Field

relocFailDisabledAtNewSgsn

Source Section

CPSuccessFail

relocFailDnsTimExpOldSgsn

The number of 3G-SGSN SRNS Relocation rejected due to timer expiry while waiting for DNS response

© Copyright IBM Corp. 1999, 2009. All rights reserved.

Data Source

SGSN_Server

Source Field

relocFailDnsTimExpOldSgsn

Source Section

CPSuccessFail

relocFailInteractWithOtherProc

The number of 3G-SGSN SRNS Relocation attempts received and rejected while the other procedure is being processed

Data Source

SGSN_Server

Source Field

relocFailInteractWithOtherProc

Source Section

CPSuccessFail

relocFailInterSysNotSupOldSgsn

The number of 3G-SGSN SRNS Relocation rejected because inter-system (UMTS to GSM) relocation is not supported by this feature

Data Source

SGSN_Server

Source Field

relocFailInterSysNotSupOldSgsn

Source Section

CPSuccessFail

relocFailNewSgsnNoAcptOldSgsn

The number of 3G-SGSN SRNS Relocation processing stopped at old SGSN when receives failure response from new SGSN indicating ?not accept? the SRNS relocation request

Data Source

SGSN_Server

Source Field

relocFailNewSgsnNoAcptOldSgsn

Source Section

CPSuccessFail

relocFailOldCancelNewSgsn

The number of 3G-SGSN SRNS Relocation processing stopped due to receiving GTP relocation cancel request from old SGSN

Data Source

SGSN_Server

Source Field

relocFailOldCancelNewSgsn

Source Section

CPSuccessFail

relocFailOtherIntra

The number of intra 3G-SGSN SRNS Relocation processing stopped due to other internal reasons

Data Source

SGSN_Server

Source Field

relocFailOtherIntra

Source Section

CPSuccessFail

relocFailOtherNewSgsn

The number of 3G-SGSN SRNS Relocation processing stopped at new SGSN due to other internal reasons

© Copyright IBM Corp. 1999, 2009. All rights reserved.

Data Source

SGSN_Server

Source Field

relocFailOtherNewSgsn

Source Section

CPSuccessFail

relocFailOtherOldSgsn

The number of inter 3G-SGSN SRNS Relocation processing stopped due to other internal reasons

Data Source

SGSN_Server

Source Field

relocFailOtherOldSgsn

Source Section

CPSuccessFail

relocFailRelocTypeNotSupIntra

The number of intra 3G-SGSN SRNS Relocation rejected at serving SGSN because the relocation type is not UE-Involved

Data Source

SGSN_Server

Source Field

relocFailRelocTypeNotSupIntra

Source Section

CPSuccessFail

relocFailRelocTypeNotSupOldSgsn

The number of inter 3G-SGSN SRNS Relocation rejected at old SGSN because the relocation type is not UE-Involved

Data Source

SGSN_Server

Source Field

relocFailRelocTypeNotSupOldSgsn

Source Section

CPSuccessFail

relocFailRoamRestrtAtNewSgsn

The number of 3G-SGSN SRNS Relocation rejected at new SGSN due to roaming restriction

Data Source

SGSN_Server

Source Field

relocFailRoamRestrtAtNewSgsn

Source Section

CPSuccessFail

relocFailTimerExpiryOldSgsn

The number of 3G-SGSN SRNS Relocation processing stopped due to timer expiry

Data Source

SGSN_Server

Source Field

relocFailTimerExpiryOldSgsn

Source Section

CPSuccessFail

relocFailTrncNotSupNewSgsn

The number of 3G-SGSN SRNS Relocation rejected at new SGSN because the target RNC is not supported by the new SGSN

© Copyright IBM Corp. 1999, 2009. All rights reserved.

Data Source

SGSN_Server

Source Field

relocFailTrncNotSupNewSgsn

Source Section

CPSuccessFail

relocFailUnknownTrncOldSgsn

The number of 3G-SGSN SRNS Relocation rejected due to no target SGSN IP address derived

Data Source

SGSN_Server

Source Field

relocFailUnknownTrncOldSgsn

Source Section

CPSuccessFail

relocIuRelFromSrncIntra

The number of intra 3G-SGSN SRNS Relocation processing stopped due to Iu release received from source RNC

Data Source

SGSN_Server

Source Field

relocIuRelFromSrncIntra

Source Section

CPSuccessFail

relocIuRelFromSrncOldSgsn

The number of inter 3G-SGSN SRNS Relocation processing stopped due to Iu release received from source RNC

Data Source

SGSN_Server

Source Field

relocIuRelFromSrncOldSgsn

Source Section

CPSuccessFail

relocIuRelFromTrncIntra

The number of intra 3G-SGSN SRNS Relocation processing stopped due to Iu release received from target RNC

Data Source

SGSN_Server

Source Field

relocIuRelFromTrncIntra

Source Section

CPSuccessFail

relocIuRelFromTrncNewSgsn

The number of inter 3G-SGSN SRNS Relocation processing stopped due to Iu release received from target RNC

Data Source

SGSN_Server

Source Field

relocIuRelFromTrncNewSgsn

Source Section

CPSuccessFail

relocRelocCompTimExpIntra

The number of intra 3G-SGSN SRNS Relocation failures due to TRELOCcomplete timer expiry

© Copyright IBM Corp. 1999, 2009. All rights reserved.

Data Source

SGSN_Server

Source Field

relocRelocCompTimExpIntra

Source Section

CPSuccessFail

relocRelocCompTimExpNewSgsn

The number of inter 3G-SGSN SRNS Relocation failures due to TRELOCCompleteNewSgsn timer expiry

Data Source

SGSN_Server

Source Field

relocRelocCompTimExpNewSgsn

Source Section

CPSuccessFail

relocReqAckTimExpIntra

The number of intra 3G-SGSN SRNS Relocation failures due to TRELOCalloctimer expiry

Data Source

SGSN_Server

Source Field

relocReqAckTimExpIntra

Source Section

CPSuccessFail

relocReqAckTimExpNewSgsn

The number of inter 3G-SGSN SRNS Relocation failures due to TRELOCalloctimer expiry

Data Source

SGSN_Server

Source Field

relocReqAckTimExpNewSgsn

Source Section

CPSuccessFail

sccpConnConfirm

Number of SCCP Connection Confirm Messages sent to RNC from CP.

Data Source

SGSN_Server

Source Field

sccpConnConfirm

Source Section

CPSuccessFail

sccpConnRequest

Number of SCCP Connection Request Messages received at SP from RNC.

Data Source

SGSN_Server

Source Field

sccpConnRequest

Source Section

SPSuccessFail

scdrRecordsGenerated

Number of S-CDR records generated by connection processing in the SGSN. (CP)

Data Source

SGSN_Server

© Copyright IBM Corp. 1999, 2009. All rights reserved.

Source Field

scdrRecordsGenerated

Source Section

CDRGenerated

scdrRecordsSent

Number of S-CDR records sent from the SGSN to the CGF. (CP)

Data Source

SGSN_Server

Source Field

scdrRecordsSent

Source Section

CGFSent

scSuspendedDataReused

The number of Supercharger-suspended subscription data that is reused at a Super-Charged Serving Network Entity during processing Attach or RAU procedure.

Data Source

SGSN_Server

Source Field

scSuspendedDataReused

Source Section

CPSuccessFail

scSuspendedDataUpdated

The number of Supercharger-suspended subscription data that is updated at a Super-Charged Serving Network Entity during processing Attach or RAU procedure.

Data Source

SGSN_Server

Source Field

scSuspendedDataUpdated

Source Section

CPSuccessFail

scSuspendedRecords

The number of UE's subscription records that are marked as Supercharger-suspended at Super-Charged Previous Network Entity.

Data Source

SGSN_Server

Source Field

scSuspendedRecords

Source Section

CPSuccessFail

SEC_AttAuthProcsSgsnSim_U

Attempted authentication procedures that are started within this SGSN area for a subscriber using a SIM

Data Source

SGSN_Server

Source Field

SEC.AttAuthProcsSgsnSim.U

Source Section

CPSuccessFail

SEC_AttAuthProcsSgsnUsim_U

Attempted authentication procedures that are started within this SGSN area for a subscriber using a USIM

Data Source

SGSN_Server

© Copyright IBM Corp. 1999, 2009. All rights reserved.

Source Field

SEC.AttAuthProcsSgsnUsim.U

Source Section

CPSuccessFail

SEC_AttCiphering

Attempted ciphering procedures started by the SGSN

Data Source

SGSN_Server

Source Field

SEC.AttCiphering

Source Section

CPSuccessFail

SEC_AttContextRequestFromPsgsn_U

Attempted SGSN context requests received from a partner (new) SGSN for a subscriber de-registering from this SGSN

Data Source

SGSN_Server

Source Field

SEC.AttContextRequestFromPsgsn.U

Source Section

CPSuccessFail

SEC_AttContextRequestToPsgsn_U

Attempted SGSN context requests sent to a partner (previous) SGSN for subscribers registering afresh in this SGSN

Data Source

SGSN_Server

Source Field

SEC.AttContextRequestToPsgsn.U

Source Section

CPSuccessFail

SEC_AttGmmAuthImeisv_U

Pegged when a GMM Auth/Ciphering message is sent from the SGSN to the UE with the IMEI-SV request

Data Source

SGSN_Server

Source Field

SEC.AttGmmAuthImeisv.U

Source Section

CPSuccessFail

SEC_AttGmmIdImeisv_U

Pegged when a GMM ID message is sent from the SGSN to the UE with the IMEI-SV request

Data Source

SGSN_Server

Source Field

SEC.AttGmmIdImeisv.U

Source Section

CPSuccessFail

SEC_AttIdentityReqFromPsgsn_U

Attempted identification information requests that were received from a partner (new) SGSN for subscribers de-registering from this SGSN

Data Source

SGSN_Server

© Copyright IBM Corp. 1999, 2009. All rights reserved.

Source Field

SEC.AttIdentityReqFromPsgsn.U

Source Section

CPSuccessFail

SEC_AttIdentityReqImsi_U

Attempted Identity Request procedures initiated by this SGSN.

Data Source

SGSN_Server

Source Field

SEC.AttIdentityReqImsi.U

Source Section

CPSuccessFail

SEC_AttIdentityReqToPsgsn_U

Attempted identification information requests sent to a partner (previous) SGSN for subscribers registering afresh in this SGSN

Data Source

SGSN_Server

Source Field

SEC.AttIdentityReqToPsgsn.U

Source Section

CPSuccessFail

SEC_AttIdentityRequest_U

Attempted Identity Requests sent to the MS

Data Source

SGSN_Server

Source Field

SEC.AttIdentityRequest.U

Source Section

CPSuccessFail

SEC_AttPTMSIRealloc_U

Attempted P-TMSI reallocation procedures.

Data Source

SGSN_Server

Source Field

SEC.AttPTMSIRealloc.U

Source Section

CPSuccessFail

SEC_AttReqAuthSetsHlrV3

Attempted MAP V3 requests for Authentication sets sent to the HLR by SGSN.

Data Source

SGSN_Server

Source Field

SEC.AttReqAuthSetsHlrV3

Source Section

CPSuccessFail

SEC_AttSecMode

Attempted security mode control procedures started by the SGSN

Data Source

SGSN_Server

Source Field

SEC.AttSecMode

© Copyright IBM Corp. 1999, 2009. All rights reserved.

Source Section

CPSuccessFail

SEC_NbrEmptyRespAuthSetsHlrV3

Number of empty responses to the MAP V3 request for authentication sets that were sent to the HLR

Data Source

SGSN_Server

Source Field

SEC.NbrEmptyRespAuthSetsHlrV3

Source Section

CPSuccessFail

SEC_NbrPTMSICorrFailRnc

Number of P-TMSI - IMSI correlation failures (User Identity Confidentiality (TS 23.060))

Data Source

SGSN_Server

Source Field

SEC.NbrPTMSICorrFailRnc

Source Section

CPSuccessFail

SEC_RecPOAuthFailSgsn_U

Received ciphering and Authentication failures within this SGSN area

Data Source

SGSN_Server

Source Field

SEC.RecPOAuthFailSgsn.U

Source Section

CPSuccessFail

SEC_SuccAuthProcsSgsnSim_U

Successful authentication procedures within this SGSN area, for a subscriber using a SIM

Data Source

SGSN_Server

Source Field

SEC.SuccAuthProcsSgsnSim.U

Source Section

CPSuccessFail

SEC_SuccAuthProcsSgsnUsim_U

Successful authentication procedures within this SGSN area, for a subscriber using a USIM

Data Source

SGSN_Server

Source Field

SEC.SuccAuthProcsSgsnUsim.U

Source Section

CPSuccessFail

SEC_SuccCiphering

Successful ciphering procedures started by the SGSN

Data Source

SGSN_Server

Source Field

SEC.SuccCiphering

Source Section

CPSuccessFail

© Copyright IBM Corp. 1999, 2009. All rights reserved.

SEC_SuccContextRequestFromPsgsn_U

Successfully replied SGSN context requests received from a partner (new) SGSN

Data Source

SGSN_Server

Source Field

SEC.SuccContextRequestFromPsgsn.U

Source Section

CPSuccessFail

SEC_SuccContextRequestToPsgsn_U

Successfully replied SGSN context requests that were sent to a partner (previous) SGSN

Data Source

SGSN_Server

Source Field

SEC.SuccContextRequestToPsgsn.U

Source Section

CPSuccessFail

SEC_SuccGmmAuthImeisv_U

Pegged when the UE returns the IMEI-SV in response to the GMM Auth/Ciphering message

Data Source

SGSN_Server

Source Field

SEC.SuccGmmAuthImeisv.U

Source Section

CPSuccessFail

SEC_SuccGmmIdImeisv_U

Pegged when the UE returns the IMEI-SV in response to the GMM ID message

Data Source

SGSN_Server

Source Field

SEC.SuccGmmIdImeisv.U

Source Section

CPSuccessFail

SEC_SuccIdentityReqFromPsgsn_U

Successfully replied identification information requests that were received from a partner (new) SGSN

Data Source

SGSN_Server

Source Field

SEC.SuccIdentityReqFromPsgsn.U

Source Section

CPSuccessFail

SEC_SuccIdentityReqImsi_U

Successful completed Identity Request procedures initiated by this SGSN.

Data Source

SGSN_Server

Source Field

SEC.SuccIdentityReqImsi.U

Source Section

CPSuccessFail

SEC_SuccIdentityReqToPsgsn_U

Successful replied identification information requests that were sent to a partner (previous) SGSN

© Copyright IBM Corp. 1999, 2009. All rights reserved.

Data Source

SGSN_Server

Source Field

SEC.SuccIdentityReqToPsgsn.U

Source Section

CPSuccessFail

SEC_SuccIdentityRequest_U

Successful replied Identity Requests from the MS

Data Source

SGSN_Server

Source Field

SEC.SuccIdentityRequest.U

Source Section

CPSuccessFail

SEC_SuccPTMSIRealloc_U

Successful P-TMSI reallocation procedures

Data Source

SGSN_Server

Source Field

SEC.SuccPTMSIRealloc.U

Source Section

CPSuccessFail

SEC_SuccReqAuthSetsHlrV3

Successful MAP V3 requests for authentication sets that were sent to the HLR.

Data Source

SGSN_Server

Source Field

SEC.SuccReqAuthSetsHlrV3

Source Section

CPSuccessFail

SEC_SuccSecMode

Successful security mode procedures

Data Source

SGSN_Server

Source Field

SEC.SuccSecMode

Source Section

CPSuccessFail

SM_AttActPdpContext_U

Attempted PDP context activation procedures initiated by MS.

Data Source

SGSN_Server

Source Field

SM.AttActPdpContext.U

Source Section

CPSuccessFail

SM_AttActPdpContextDyn_U

Attempted dynamic PDP context activation procedures initiated by MS.

Data Source

SGSN_Server

Source Field

SM.AttActPdpContextDyn.U

© Copyright IBM Corp. 1999, 2009. All rights reserved.

Source Section

CPSuccessFail

SM_AttActSecondPdpContext_U

Attempted Secondary PDP context activation procedures

Data Source

SGSN_Server

Source Field

SM.AttActSecondPdpContext.U

Source Section

CPSuccessFail

SM_AttBgrdRabModRnc_U

The number of attempted RAB Modification procedures initiated by RNC for background traffic class

Data Source

SGSN_Server

Source Field

SM.AttBgrdRabModRnc.U

Source Section

CPSuccessFail

SM_AttConvRabModRnc_U

The number of attempted RAB Modification procedures initiated by RNC for conversational traffic class

Data Source

SGSN_Server

Source Field

SM.AttConvRabModRnc.U

Source Section

CPSuccessFail

SM_AttDeactPdpContextGgsn_U

Attempted PDP context deactivation procedures initiated by the GGSN.

Data Source

SGSN_Server

Source Field

SM.AttDeactPdpContextGgsn.U

Source Section

CPSuccessFail

SM_AttDeactPdpContextMs_U

Attempted PDP context deactivation procedures initiated by the MS.

Data Source

SGSN_Server

Source Field

SM.AttDeactPdpContextMs.U

Source Section

CPSuccessFail

SM_AttDeactPdpContextSgsn_36

Abnormal PDP context Deactivation procedure with cause code 36, Regular deactivation

Data Source

SGSN_Server

Source Field

SM.AttDeactPdpContextSgsn.36

Source Section

CPSuccessFail

© Copyright IBM Corp. 1999, 2009. All rights reserved.

SM_AttDeactPdpContextSgsn_38

Abnormal PDP context Deactivation procedure with cause code 38, Network failure

Data Source

SGSN_Server

Source Field

SM.AttDeactPdpContextSgsn.38

Source Section

CPSuccessFail

SM_AttDeactPdpContextSgsn_39

Abnormal PDP context Deactivation procedure with cause code 39, Reactivation required

Data Source

SGSN_Server

Source Field

SM.AttDeactPdpContextSgsn.39

Source Section

CPSuccessFail

SM_AttDeactPdpContextSgsn_8

Abnormal PDP context Deactivation procedure with cause code 8, Operator Determined Barring

Data Source

SGSN_Server

Source Field

SM.AttDeactPdpContextSgsn.8

Source Section

CPSuccessFail

SM_AttDeactPdpContextSgsn_U

Attempted PDP context deactivation procedures initiated by the SGSN

Data Source

SGSN_Server

Source Field

SM.AttDeactPdpContextSgsn.U

Source Section

CPSuccessFail

SM_AttIntactRabModRnc_U

The number of attempted RAB Modification procedures initiated by RNC for interactive traffic class

Data Source

SGSN_Server

Source Field

SM.AttIntactRabModRnc.U

Source Section

CPSuccessFail

SM_AttModPdpContextMs_U

Attempted MS-Initiated PDP context modifications procedures

Data Source

SGSN_Server

Source Field

SM.AttModPdpContextMs.U

Source Section

CPSuccessFail

© Copyright IBM Corp. 1999, 2009. All rights reserved.

SM_AttModPdpContextSgsn_U

Attempted SGSN-Initiated PDP context modifications procedures

Data Source

SGSN_Server

Source Field

SM.AttModPdpContextSgsn.U

Source Section

CPSuccessFail

SM_AttStrmRabModRnc_U

The number of attempted RAB Modification procedures initiated by RNC for streaming traffic class

Data Source

SGSN_Server

Source Field

SM.AttStrmRabModRnc.U

Source Section

CPSuccessFail

SM_AttUpdPdpContextGgsn_U

Attempted GGSN-Initiated PDP context update procedures

Data Source

SGSN_Server

Source Field

SM.AttUpdPdpContextGgsn.U

Source Section

CPSuccessFail

SM_AttUpdPdpContextSgsn_U

Attempted SGSN-Initiated PDP context update procedures

Data Source

SGSN_Server

Source Field

SM.AttUpdPdpContextSgsn.U

Source Section

CPSuccessFail

SM_FailActPdpCtxtMs_100

Failed PDP context activation procedures initiated by MS with cause code 100, Conditional IE error

Data Source

SGSN_Server

Source Field

SM.FailActPdpCtxtMs.100

Source Section

CPSuccessFail

SM_FailActPdpCtxtMs_101

Failed PDP context activation procedures initiated by MS with cause code 101, Message not compatible with the protocol state

Data Source

SGSN_Server

Source Field

SM.FailActPdpCtxtMs.101

Source Section

CPSuccessFail

© Copyright IBM Corp. 1999, 2009. All rights reserved.

SM_FailActPdpCtxtMs_111

Failed PDP context activation procedures initiated by MS with cause code 111, Protocol error, unspecified

Data Source

SGSN_Server

Source Field

SM.FailActPdpCtxtMs.111

Source Section

CPSuccessFail

SM_FailActPdpCtxtMs_26

Failed PDP context activation procedures initiated by MS with cause code 26, Insufficient resources

Data Source

SGSN_Server

Source Field

SM.FailActPdpCtxtMs.26

Source Section

CPSuccessFail

SM_FailActPdpCtxtMs_27

Failed PDP context activation procedures initiated by MS with cause code 27, Missing or unknown APN

Data Source

SGSN_Server

Source Field

SM.FailActPdpCtxtMs.27

Source Section

CPSuccessFail

SM_FailActPdpCtxtMs_28

Failed PDP context activation procedures initiated by MS with cause code 28, Unknown PDP address or PDP type

Data Source

SGSN_Server

Source Field

SM.FailActPdpCtxtMs.28

Source Section

CPSuccessFail

SM_FailActPdpCtxtMs_29

Failed PDP context activation procedures initiated by MS with cause code 29, User Aauthentication failed

Data Source

SGSN_Server

Source Field

SM.FailActPdpCtxtMs.29

Source Section

CPSuccessFail

SM_FailActPdpCtxtMs_30

Failed PDP context activation procedures initiated by MS with cause code 30, Activation rejected by GGSN

Data Source

SGSN_Server

Source Field

SM.FailActPdpCtxtMs.30

Source Section

CPSuccessFail

© Copyright IBM Corp. 1999, 2009. All rights reserved.

SM_FailActPdpCtxtMs_31

Failed PDP context activation procedures initiated by MS with cause code 31, Activation rejected, unspecified

Data Source

SGSN_Server

Source Field

SM.FailActPdpCtxtMs.31

Source Section

CPSuccessFail

SM_FailActPdpCtxtMs_32

Failed PDP context activation procedures initiated by MS with cause code 32, Service option not supported

Data Source

SGSN_Server

Source Field

SM.FailActPdpCtxtMs.32

Source Section

CPSuccessFail

SM_FailActPdpCtxtMs_33

Failed PDP context activation procedures initiated by MS with cause code 33, Requested service option not subscribed

Data Source

SGSN_Server

Source Field

SM.FailActPdpCtxtMs.33

Source Section

CPSuccessFail

SM_FailActPdpCtxtMs_34

Failed PDP context activation procedures initiated by MS with cause code 34, Service option temporarily out of order

Data Source

SGSN_Server

Source Field

SM.FailActPdpCtxtMs.34

Source Section

CPSuccessFail

SM_FailActPdpCtxtMs_35

Failed PDP context activation procedures initiated by MS with cause code 35, NSAPI already used (not sent)

Data Source

SGSN_Server

Source Field

SM.FailActPdpCtxtMs.35

Source Section

CPSuccessFail

SM_FailActPdpCtxtMs_8

Failed PDP context activation procedures initiated by MS with cause code 8, Operator Determined Barring

Data Source

SGSN_Server

Source Field

SM.FailActPdpCtxtMs.8

Source Section

CPSuccessFail

© Copyright IBM Corp. 1999, 2009. All rights reserved.

SM_FailActPdpCtxtMs_95

Failed PDP context activation procedures initiated by MS with cause code 95, Semantically incorrect message

Data Source

SGSN_Server

Source Field

SM.FailActPdpCtxtMs.95

Source Section

CPSuccessFail

SM_FailActPdpCtxtMs_96

Failed PDP context activation procedures initiated by MS with cause code 96, Invalid mandatory information

Data Source

SGSN_Server

Source Field

SM.FailActPdpCtxtMs.96

Source Section

CPSuccessFail

SM_FailActPdpCtxtMs_97

Failed PDP context activation procedures initiated by MS with cause code 97, Message type non-existent or not implemented

Data Source

SGSN_Server

Source Field

SM.FailActPdpCtxtMs.97

Source Section

CPSuccessFail

SM_FailActPdpCtxtMs_98

Failed PDP context activation procedures initiated by MS with cause code 98, Message type not compatible with the protocol state

Data Source

SGSN_Server

Source Field

SM.FailActPdpCtxtMs.98

Source Section

CPSuccessFail

SM_FailActPdpCtxtMs_99

Failed PDP context activation procedures initiated by MS with cause code 99, Information element non-existent or not implemented

Data Source

SGSN_Server

Source Field

SM.FailActPdpCtxtMs.99

Source Section

CPSuccessFail

SM_MeanActivePdpPerSgsn_U

Mean number of subscribers that have an activated PDP context (i.e. subscribers that can send/ receive GPRS packet data).

Data Source

SGSN_Server

Source Field

SM.MeanActivePdpPerSgsn.U

Source Section

CPDerived

© Copyright IBM Corp. 1999, 2009. All rights reserved.

SM_MeanActPDPContext_U

Mean number of activated PDP contexts

Data Source

SGSN_Server

Source Field

SM.MeanActPDPContext.U

Source Section

CPDerived

SM_NbrActivePdpPerSgsn_U

Number of mobile subscribers with activated PDP context (i.e. subscribers that can send/receive GPRS packet data).

Data Source

SGSN_Server

Source Field

SM.NbrActivePdpPerSgsn.U

Source Section

CPSuccessFail

SM_NbrActPdpContext_U

Number of active PDP context

Data Source

SGSN_Server

Source Field

SM.NbrActPdpContext.U

Source Section

CPSuccessFail

SM_SuccActPdpContext_U

Successful PDP context activation procedures initiated by MS

Data Source

SGSN_Server

Source Field

SM.SuccActPdpContext.U

Source Section

CPSuccessFail

SM_SuccActPdpContextAPNTimeMOMax_Bgrd

Maximum PDP Context set-up time, initiated by MS for traffic class Background

Data Source

SGSN_Server

Source Field

SM.SuccActPdpContextAPNTimeMOMax.Bgrd

Source Section

CPDerived

SM_SuccActPdpContextAPNTimeMOMax_Conv

Maximum PDP Context set-up time, initiated by MS for traffic class Conversational

Data Source

SGSN_Server

Source Field

SM.SuccActPdpContextAPNTimeMOMax.Conv

Source Section

CPDerived

SM_SuccActPdpContextAPNTimeMOMax_Intact

Maximum PDP Context set-up time, initiated by MS for traffic class Interactive

© Copyright IBM Corp. 1999, 2009. All rights reserved.

Data Source

SGSN_Server

Source Field

SM.SuccActPdpContextAPNTimeMOMax.Intact

Source Section

CPDerived

SM_SuccActPdpContextAPNTimeMOMax_Strm

Maximum PDP Context set-up time, initiated by MS for traffic class Streaming

Data Source

SGSN_Server

Source Field

SM.SuccActPdpContextAPNTimeMOMax.Strm

Source Section

CPDerived

SM_SuccActPdpContextAPNTimeMOMean_Bgrd

Mean PDP Context set-up time, initiated by MS for traffic class Background

Data Source

SGSN_Server

Source Field

SM.SuccActPdpContextAPNTimeMOMean.Bgrd

Source Section

CPDerived

SM_SuccActPdpContextAPNTimeMOMean_Conv

Mean PDP Context set-up time, initiated by MS for traffic class Conversational

Data Source

SGSN_Server

Source Field

SM.SuccActPdpContextAPNTimeMOMean.Conv

Source Section

CPDerived

SM_SuccActPdpContextAPNTimeMOMean_Intact

Mean PDP Context set-up time, initiated by MS for traffic class Interactive

Data Source

SGSN_Server

Source Field

SM.SuccActPdpContextAPNTimeMOMean.Intact

Source Section

CPDerived

SM_SuccActPdpContextAPNTimeMOMean_Strm

Mean PDP Context set-up time, initiated by MS for traffic class Streaming

Data Source

SGSN_Server

Source Field

SM.SuccActPdpContextAPNTimeMOMean.Strm

Source Section

CPDerived

SM_SuccActPdpContextDyn_U

Successful dynamic PDP context activation procedures initiated by MS

Data Source

SGSN_Server

Source Field

SM.SuccActPdpContextDyn.U

© Copyright IBM Corp. 1999, 2009. All rights reserved.

Source Section

CPSuccessFail

SM_SuccActSecondPdpContext_U

Successful Secondary PDP context activations

Data Source

SGSN_Server

Source Field

SM.SuccActSecondPdpContext.U

Source Section

CPSuccessFail

SM_SuccBgrdRabModRnc_U

The number of successfully performed RAB Modification procedures initiated by RNC for background traffic class

Data Source

SGSN_Server

Source Field

SM.SuccBgrdRabModRnc.U

Source Section

CPSuccessFail

SM_SuccConvRabModRnc_U

The number of successfully performed RAB Modification procedures initiated by RNC for conversational traffic class

Data Source

SGSN_Server

Source Field

SM.SuccConvRabModRnc.U

Source Section

CPSuccessFail

SM_SuccDeactPdpContextGgsn_U

Successful PDP context deactivation procedures initiated by the GGSN

Data Source

SGSN_Server

Source Field

SM.SsuccDeactPdpContextGgsn.U

Source Section

CPSuccessFail

SM_SuccDeactPdpContextMs_U

Successful PDP context deactivation procedures initiated by the MS

Data Source

SGSN_Server

Source Field

SM.SuccDeactPdpContextMs.U

Source Section

CPSuccessFail

SM_SuccDeactPdpContextSgsn_U

Successful PDP context deactivations initiated by the SGSN

Data Source

SGSN_Server

Source Field

SM.SuccDeactPdpContextSgsn.U

Source Section

CPSuccessFail

© Copyright IBM Corp. 1999, 2009. All rights reserved.

SM_SuccIntactRabModRnc_U

The number of successfully performed RAB Modification procedures initiated by RNC for interactive traffic class

Data Source

SGSN_Server

Source Field

SM.SuccIntactRabModRnc.U

Source Section

CPSuccessFail

SM_SuccModPdpContextMs_U

Successfully MS-Initiated PDP context modifications procedures

Data Source

SGSN_Server

Source Field

SM.SsuccModPdpContextMs.U

Source Section

CPSuccessFail

SM_SuccModPdpContextSgsn_U

Successfully SGSN-Initiated PDP context modifications procedures

Data Source

SGSN_Server

Source Field

SM.SuccModPdpContextSgsn.U

Source Section

CPSuccessFail

SM_SuccStrmRabModRnc_U

The number of successfully performed RAB Modification procedures initiated by RNC for streaming traffic class

Data Source

SGSN_Server

Source Field

SM.SuccStrmRabModRnc.U

Source Section

CPSuccessFail

SM_SuccUpdPdpContextGgsn_U

Successful GGSN-Initiated PDP context update procedures

Data Source

SGSN_Server

Source Field

SM.SuccUpdPdpContextGgsn.U

Source Section

CPSuccessFail

SM_SuccUpdPdpContextSgsn_U

Successful SGSN-Initiated PDP context update procedures

Data Source

SGSN_Server

Source Field

SM.SsuccUpdPdpContextSgsn.U

Source Section

CPSuccessFail

© Copyright IBM Corp. 1999, 2009. All rights reserved.

smocdrRecordsGenerated

Number of SMO-CDR records generated for Mobile Originated SMS by connection processing in the SGSN. (CP)

Data Source

SGSN_Server

Source Field

smocdrRecordsGenerated

Source Section

CDRGenerated

smocdrRecordsSent

Number of SMO-CDR records sent from SGSN to CGF for Mobile Originated SMS. (CP)

Data Source

SGSN_Server

Source Field

smocdrRecordsSent

Source Section

CGFSent

SMS_AttMemoryAvailablePS_U

Attempted PS "memory available"

Data Source

SGSN_Server

Source Field

SMS.AttMemoryAvailablePS.U

Source Section

ShortMessageService

SMS_AttMoPS_U

Attempted PS SMS mobile originating

Data Source

SGSN_Server

Source Field

SMS.AttMoPS.U

Source Section

ShortMessageService

SMS_AttMsPresentPS_U

Attempted PS ms-Present

Data Source

SGSN_Server

Source Field

SMS.AttMsPresentPS.U

Source Section

ShortMessageService

SMS_AttMtPS_U

Attempted PS SMS mobile terminating

Data Source

SGSN_Server

Source Field

SMS.AttMtPS.U

Source Section

ShortMessageService

SMS_SuccMemoryAvailablePS_U

Successful PS "memory available"

© Copyright IBM Corp. 1999, 2009. All rights reserved.

Data Source

SGSN_Server

Source Field

SMS.SuccMemoryAvailablePS.U

Source Section

ShortMessageService

SMS_SuccMoPS_U

Successful PS SMS mobile originating

Data Source

SGSN_Server

Source Field

SMS.SuccMoPS.U

Source Section

ShortMessageService

SMS_SuccMsPresentPS_U

Successful PS ms-Present

Data Source

SGSN_Server

Source Field

SMS.SuccMsPresentPS.U

Source Section

ShortMessageService

SMS_SuccMtPS_U

Successful PS SMS mobile terminating

Data Source

SGSN_Server

Source Field

SMS.SuccMtPS.U

Source Section

ShortMessageService

smtcdrRecordsGenerated

Number of SMT-CDR records generated for Mobile Terminated SMS by connection processing in the SGSN. (CP)

Data Source

SGSN_Server

Source Field

smtcdrRecordsGenerated

Source Section

CDRGenerated

smtcdrRecordsSent

Number of SMT-CDR records sent from SGSN to CGF for Mobile Terminated SMS. (CP)

Data Source

SGSN_Server

Source Field

smtcdrRecordsSent

Source Section

CGFSent

SUB_AttDeleteSubscrDataHlrOp_U

Attempted Delete Subscriber Data requests received from a HLR due to an HLR-operator intervention

Data Source

SGSN_Server

© Copyright IBM Corp. 1999, 2009. All rights reserved.

Source Field

SUB.AttDeleteSubscrDataHlrOp.U

Source Section

CPSuccessFail

SUB_AttInsertSubscrDataHlrOp_U

Attempted Insert Subscriber Data requests received from a HLR due to an HLR-operator intervention

Data Source

SGSN_Server

Source Field

SUB.AttInsertSubscrDataHlrOp.U

Source Section

CPSuccessFail

succAuthInSgsn

The number of successful authentication procedures attempted by the SGSN. (CP IUPS)

Data Source

SGSN_Server

Source Field

succAuthInSgsn

Source Section

CPSuccessFail

succDefMTLocReq

Number of Successful responses Deferred MT-LR

Data Source

SGSN_Server

Source Field

succDefMTLocReq

Source Section

PMLocationServices

succDnsReq

Incremented when a successful resolution response is received from the DNS.

Data Source

SGSN_Server

Source Field

succDnsReq

Source Section

CPSuccessFail

succMOLocReq

Number of Successful MO-LR responses

Data Source

SGSN_Server

Source Field

succMOLocReq

Source Section

PMLocationServices

succMTLocReq

Number of Successful MT-LR reponses

Data Source

SGSN_Server

Source Field

succMTLocReq

© Copyright IBM Corp. 1999, 2009. All rights reserved.

Source Section

PMLocationServices

succPeriodicIntraRau

Number of successfully completed intra-SGSN RAUs at SGSN CP.

Data Source

SGSN_Server

Source Field

succPeriodicIntraRau

Source Section

CPSuccessFail

succRabRelease

The number of successful RAB releases initiated by RNC

Data Source

SGSN_Server

Source Field

succRabRelease

Source Section

CPSuccessFail

succSeqNumOrdReq

The number of successful GTP sequence numbers received by the SGSN when Order=yes.

Data Source

SGSN_Server

Source Field

succSeqNumOrdReq

Source Section

CPSuccessFail

tcpActiveOpens

The number of times TCP connections have made a direct transition to the SYN-SENT state from the CLOSED state.

Data Source

SGSN_Server

Source Field

tcpActiveOpens

Source Section

TCPData

tcpAttemptFails

The number of times TCP connections have made a direct transition to the CLOSED state from either the SYN-SENT state or the SYN-RCVD state, plus the number of times TCP connections have made a direct transition to the LISTEN state from the SYN-RCVD state.

Data Source

SGSN_Server

Source Field

tcpAttemptFails

Source Section

TCPData

tcpCurrEstab

The number of TCP connections for which the current state is either ESTABLISHED or CLOSE-WAIT.

Data Source

SGSN_Server

Source Field

tcpCurrEstab

Source Section

TCPData

© Copyright IBM Corp. 1999, 2009. All rights reserved.

tcpEstabResets

The number of times TCP connections have made a direct transition to the CLOSED state from either the ESTABLISHED state or the CLOSE-WAIT state.

Data Source

SGSN_Server

Source Field

tcpEstabResets

Source Section

TCPData

tcpInErrs

The total number of segments received in error (e.g., bad TCP checksums)

Data Source

SGSN_Server

Source Field

tcpInErrs

Source Section

TCPData

tcpInSegs

The total number of segments received, including those received in error

Data Source

SGSN_Server

Source Field

tcpInSegs

Source Section

TCPData

tcpOutRsts

The number of TCP segments sent containing the RST flag

Data Source

SGSN_Server

Source Field

tcpOutRsts

Source Section

TCPData

tcpOutSegs

The total number of segments sent, including those on current connections but excluding those containing only retransmitted octets.

Data Source

SGSN_Server

Source Field

tcpOutSegs

Source Section

TCPData

tcpPassiveOpens

The number of times TCP connections have made a direct transition to the SYN-RCVD state from the LISTEN state.

Data Source

SGSN_Server

Source Field

tcpPassiveOpens

Source Section

TCPData

© Copyright IBM Corp. 1999, 2009. All rights reserved.

tcpRetransSegs

The total number of segments retransmitted - that is, the number of TCP segments transmitted containing one or more previously transmitted octets.

Data Source

SGSN_Server

Source Field

tcpRetransSegs

Source Section

TCPData

UBS_TimeToRegisterPSMax

UMTS Bearer Service PS time to register (Max)

Data Source

SGSN_Server

Source Field

UBS.TimeToRegisterPSMax

Source Section

CPDerived

UBS_TimeToRegisterPSMean

UMTS Bearer Service PS time to register (Mean)

Data Source

SGSN_Server

Source Field

UBS.TimeToRegisterPSMean

Source Section

CPDerived

udpInDatagrams

The total number of UDP datagrams delivered to UDP users.

Data Source

SGSN_Server

Source Field

udpInDatagrams

Source Section

UDPData

udpInErrors

The number of received UDP datagrams that could not be delivered for reasons other than the lack of an application at the destination port.

Data Source

SGSN_Server

Source Field

udpInErrors

Source Section

UDPData

udpNoPorts

The total number of received UDP datagrams for which there was no application at the destination port.

Data Source

SGSN_Server

Source Field

udpNoPorts

Source Section

UDPData

© Copyright IBM Corp. 1999, 2009. All rights reserved.

udpOutDatagrams

The total number of UDP datagrams sent to UDP users.

Data Source

SGSN_Server

Source Field

udpOutDatagrams

Source Section

UDPData

unsuccPacketSwitchingPaging

The number of unsuccessful packet switched paging procedures performed by the SGSN. Both initial and repeated paging procedures are counted. (CP)

Data Source

SGSN_Server

Source Field

unsuccPacketSwitchingPaging

Source Section

CPSuccessFail

SignalingPoint Primitive Calculations

The following is a list of primitive calculations for the SignalingPoint entity.

GRAPHmultiLineSeparator

Special Control Field for Multi-Line Graphs

Calculation

```
""
```

NUMDAYS

of days in Report

Calculation

```
DAYSINREPORT()
```

Updated: 2009-06-23

NUMHOURS

of hours in Summation Data

Calculation

SignalingPoint Peg Counts

The following is a list of peg counts for the SignalingPoint entity.

Data_interval

Data interval for the SGSN data collection in seconds. It is taken from the relevant <gp> tag in the SGSN XML data file.

Data Source

SGSN_Gateway

Source Field

<gp> tag value

Source Section

SignPointMeas

discardedMSUsRtgDataError

MSU discarded due to a routing data error

Data Source

SGSN_Gateway

Source Field

discardedMSUsRtgDataError

Source Section

SignPointMeas

localPointCode

Local Point Code

© Copyright IBM Corp. 1999, 2009. All rights reserved.

Data Source

SGSN_Gateway

Source Field

localPointCode

Source Section

SignPointMeas

signPointId

Signaling Point ID

Data Source

SGSN_Gateway

Source Field

signPointId

Source Section

SignPointMeas

Sigtran_SGP Primitive Calculations

The following is a list of primitive calculations for the Sigtran_SGP entity.

GRAPHmultiLineSeparator

Special Control Field for Multi-Line Graphs

Calculation

```
""
```

NUMDAYS

of days in Report

Calculation

```
DAYSINREPORT()
```

NUMHOURS

of hours in Summation Data

Calculation

Sigtran_SGP Peg Counts

The following is a list of peg counts for the Sigtran_SGP entity.

Data_interval

Data interval for the SGSN data collection in seconds. It is taken from the relevant <gp> tag in the SGSN XML data file.

Data Source

SGSN_Gateway

Source Field

<gp> tag value

Source Section

SGPAssoStat

m3uaAspacAckMsgReceived

The total number of M3UA ASPAC ACK messages received from an SGP.

Data Source

SGSN_Gateway

Source Field

m3uaAspacAckMsgReceived

Source Section

SGPAssoStat

m3uaAspacMsgSent

The total number of M3UA ASPAC messages transmitted to an SGP.

Data Source

SGSN_Gateway

© Copyright IBM Corp. 1999, 2009. All rights reserved.

Source Field

m3uaAspacMsgSent

Source Section

SGPAssoStat

m3uaAspupAckMsgReceived

The total number of M3UA ASPUP ACK messages received from an SGP.

Data Source

SGSN_Gateway

Source Field

m3uaAspupAckMsgReceived

Source Section

SGPAssoStat

m3uaAspupMsgSent

The total number of M3UA ASPUP messages transmitted to an SGP.

Data Source

SGSN_Gateway

Source Field

m3uaAspupMsgSent

Source Section

SGPAssoStat

m3uaBeatAckMsgReceived

The total number of M3UA BEAT ACK messages received from an SGP.

Data Source

SGSN_Gateway

Source Field

m3uaBeatAckMsgReceived

Source Section

SGPAssoStat

m3uaBeatAckMsgSent

The total number of M3UA BEAT ACK messages transmitted to an SGP.

Data Source

SGSN_Gateway

Source Field

m3uaBeatAckMsgSent

Source Section

SGPAssoStat

m3uaBeatMsgReceived

The total number of M3UA BEAT messages received from an SGP.

Data Source

SGSN_Gateway

Source Field

m3uaBeatMsgReceived

Source Section

SGPAssoStat

m3uaBeatMsgSent

The total number of M3UA BEAT messages transmitted to an SGP.

Data Source

SGSN_Gateway

Source Field

m3uaBeatMsgSent

Source Section

SGPAssoStat

© Copyright IBM Corp. 1999, 2009. All rights reserved.

m3uaDataMsgReceived

The total number of M3UA Data messages received from an SGP.

Data Source

SGSN_Gateway

Source Field

m3uaDataMsgReceived

Source Section

SGPAssoStat

m3uaDataMsgSent

The total number of M3UA Data messages transmitted to a destination SGP.

Data Source

SGSN_Gateway

Source Field

m3uaDataMsgSent

Source Section

SGPAssoStat

m3uaDaudMsgSent

The total number of M3UA destination audit (DAUD) messages transmitted to an SGP.

Data Source

SGSN_Gateway

Source Field

m3uaDaudMsgSent

Source Section

SGPAssoStat

m3uaDavaMsgReceived

The total number of M3UA destination available (DAVA) messages received from an SGP.

Data Source

SGSN_Gateway

Source Field

m3uaDavaMsgReceived

Source Section

SGPAssoStat

m3uaDrstMsgReceived

The total number of M3UA destination restricted (DRST) messages received from an SGP.

Data Source

SGSN_Gateway

Source Field

m3uaDrstMsgReceived

Source Section

SGPAssoStat

m3uaDunaMsgReceived

The total number of M3UA destination unavailable (DUNA) messages received from an SGP.

Data Source

SGSN_Gateway

Source Field

m3uaDunaMsgReceived

Source Section

SGPAssoStat

m3uaDupuMsgReceived

The total number of M3UA user part unavailable (DUPU) messages received from an SGP.

Data Source

SGSN_Gateway

© Copyright IBM Corp. 1999, 2009. All rights reserved.

Source Field

m3uaDupuMsgReceived

Source Section

SGPAssoStat

m3uaErrorMsgReceived

The total number of M3UA ERROR messages received from an SGP.

Data Source

SGSN_Gateway

Source Field

m3uaErrorMsgReceived

Source Section

SGPAssoStat

m3uaErrorMsgSent

The total number of M3UA ERROR messages transmitted to an SGP.

Data Source

SGSN_Gateway

Source Field

m3uaErrorMsgSent

Source Section

SGPAssoStat

m3uaNtfyMsgReceived

The total number of M3UA NTFY messages received from an SGP.

Data Source

SGSN_Gateway

Source Field

m3uaNtfyMsgReceived

Source Section

SGPAssoStat

m3uaSconMsgReceived

The total number of M3UA congestion (SCON) messages received from an SGP.

Data Source

SGSN_Gateway

Source Field

m3uaSconMsgReceived

Source Section

SGPAssoStat

m3uaSconMsgSent

The total number of M3UA congestion (SCON) messages transmitted to an SGP.

Data Source

SGSN_Gateway

Source Field

m3uaSconMsgSent

Source Section

SGPAssoStat

m3uaSgpPduByteReceived

The total byte count of the PDUs received from an SGP.

Data Source

SGSN_Gateway

Source Field

m3uaSgpPduByteReceived

Source Section

SGPAssoStat

© Copyright IBM Corp. 1999, 2009. All rights reserved.

m3uaSgpPduByteSent

The total byte count of the PDUs transmitted to an SGP.

Data Source

SGSN_Gateway

Source Field

m3uaSgpPduByteSent

Source Section

SGPAssoStat

m3uaSgpPduDropDpcUnavail

The total number of PDUs received from an SGP that get dropped because destination point code is not available.

Data Source

SGSN_Gateway

Source Field

m3uaSgpPduDropDpcUnavail

Source Section

SGPAssoStat

m3uaSgpPduDropNoRoute

The total number of PDUs from an SGP that get dropped because no route was found.

Data Source

SGSN_Gateway

Source Field

m3uaSgpPduDropNoRoute

Source Section

SGPAssoStat

m3uaSgpPduReceived

The total number of PDUs received from an SGP.

Data Source

SGSN_Gateway

Source Field

m3uaSgpPduReceived

Source Section

SGPAssoStat

m3uaSgpPduSent

The total number of PDUs transmitted to an SGP.

Data Source

SGSN_Gateway

Source Field

m3uaSgpPduSent

Source Section

SGPAssoStat

OutPduDroppedSctpCongestion

The number of outgoing PDUs dropped due to SCTP congestion (ASP-SGP mode).

Data Source

SGSN_Gateway

Source Field

OutPduDroppedSctpCongestion

Source Section

SgpAssoCongData

OutPduQueuedSctpCongestion

The number of outgoing PDUs queued due to SCTP congestion (ASP-SGP mode).

© Copyright IBM Corp. 1999, 2009. All rights reserved.

Data Source

SGSN_Gateway

Source Field

OutPduQueuedSctpCongestion

Source Section

SgpAssoCongData

sctpAssoFail

The total number of failed attempts in establishing an SCTP association with an SGP.

Data Source

SGSN_Gateway

Source Field

sctpAssoFail

Source Section

SGPAssoStat

sctpAssoSucc

The total number of successful SCTP association establishments with an SGP.

Data Source

SGSN_Gateway

Source Field

sctpAssoSucc

Source Section

SGPAssoStat

System Primitive Calculations

The following is a list of primitive calculations for the System entity.

GRAPHmultiLineSeparator

Special Control Field for Multi-Line Graphs

Calculation

```
""
```

NUMDAYS

of days in Report

Calculation

```
DAYSINREPORT()
```

NUMHOURS

of hours in Summation Data

Calculation

TrafficProcessor Primitive Calculations

The following is a list of primitive calculations for the TrafficProcessor entity.

Aggregated_throughput_at_GTP_layer_for_inbound_traffic

This indicator calculates the aggregated throughput of the SGSN for all inbound traffic at the GTP layer.

Calculation

```
gtpOctetsReceived * 8.0 / Data_interval
```

Aggregated_throughput_at_GTP_layer_for_outbound_traffic

This indicator calculates the aggregated throughput of the SGSN for all outbound traffic at the GTP layer

Calculation

```
gtpOctetsSent * 8.0 / Data_interval
```

Gn_Interface_Data_Octets_Transferred

Gn Interface Data Octets Transferred defines the number of data octets transferred over the Gn interface for this Traffic Processor.

Calculation

```
vsum (GTP_InDataOctGn, GTP_OutDataOctGn, 0)
```

GRAPHmultiLineSeparator

Special Control Field for Multi-Line Graphs

© Copyright IBM Corp. 1999, 2009. All rights reserved.

Calculation

```
""
```

GTP_message_reception_failure_rate

This indicator calculates the failure rate of GTP messages received from all SGSNs, GGSNs and RNCs.

Calculation

```
vsum (gtpMessagesReceived, -1.0 * succGtpMessagesReceived, 0) * 100.0 /
gtpMessagesReceived
```

GTP_message_reception_success_rate

This indicator calculates the success rate of GTP messages received from all SGSNs, GGSNs and RNCs.

Calculation

```
succGtpMessagesReceived * 100.0 / gtpMessagesReceived
```

IuPS_Interface_Octets_Transferred

Iu-ps Interface Octets Transferred defines the number of octets transferred over the Iu-ps interface on the SGSN.

Calculation

```
vsum (GTP_GtpuOutDataOctIu, GTP_GtpuInDataOctIu, 0)
```

NUMDAYS

of days in Report

Calculation

```
DAYSINREPORT()
```

NUMHOURS

of hours in Summation Data

Calculation

Throughput_at_GTP_layer_for_inbound_traffic

This indicator calculates the throughput of the SGSN for all inbound traffic at the GTP layer in kbps.

Calculation

```
gtpOctetsReceived / (128.0 * Data_interval)
```

Updated: 2009-06-23

Throughput_at_GTP_layer_for_outbound_traffic

This indicator calculates the throughput of the SGSN for all outbound traffic at the GTP layer in kbps

Calculation

```
gtpOctetsSent / (128.0 * Data_interval)
```

TrafficProcessor Peg Counts

The following is a list of peg counts for the TrafficProcessor entity.

averageTPCpuUsage

The average percent TP CPU usage over a granularity period.

Data Source

SGSN_Server

Source Field

averageTPCpuUsage

Source Section

TPSystemResources

Data_interval

Data interval for the SGSN data collection in seconds. It is taken from the <gp> tag value from TPSuccessFail section in the SGSN XML data file.

Data Source

SGSN_Server

Source Field

<gp> tag value

Source Section

TPSuccessFail

GTP_GtpuInDataOctIu

Number of octets of incoming GTP data packets on the Iu interface

© Copyright IBM Corp. 1999, 2009. All rights reserved.

Data Source

SGSN_Server

Source Field

GTP.GtpuInDataOctIu

Source Section

TPSuccessFail

GTP_GtpuInDataPktIu

Number of incoming GTP data packets on the Iu interface

Data Source

SGSN_Server

Source Field

GTP.GtpuInDataPktIu

Source Section

TPSuccessFail

GTP_GtpuOutDataOctIu

Number of octets of outgoing GTP data packets on the Iu interface

Data Source

SGSN_Server

Source Field

GTP.GtpuOutDataOctIu

Source Section

TPSuccessFail

GTP_GtpuOutDataPktIu

Number of outgoing GTP data packets on the Iu interface

Data Source

SGSN_Server

Source Field

GTP.GtpuOutDataPktIu

Source Section

TPSuccessFail

GTP_InDataOctGn

Number of octets of incoming GTP data packets on the Gn interface

Data Source

SGSN_Server

Source Field

GTP.InDataOctGn

Source Section

TPSuccessFail

GTP_InDataPktGn

Number of incoming GTP data packets on the Gn interface

Data Source

SGSN_Server

Source Field

GTP.InDataPktGn

Source Section

TPSuccessFail

GTP_OutDataOctGn

Number of octets of outgoing GTP data packets on the Gn interface

Data Source

SGSN_Server

Source Field

GTP.OutDataOctGn

© Copyright IBM Corp. 1999, 2009. All rights reserved.

Source Section

TPSuccessFail

GTP_OutDataPktGn

Number of outgoing GTP data packets on the Gn interface

Data Source

SGSN_Server

Source Field

GTP.OutDataPktGn

Source Section

TPSuccessFail

gtpMessagesReceived

Number of messages received from all SGSNs, GGSNs and RNC's. (aggregated TP)

Data Source

SGSN_Server

Source Field

gtpMessagesReceived

Source Section

TPSuccessFail

gtpMessagesSent

Number of messages sent to all SGSNs GGSNs and RNC's. (aggregated TP)

Data Source

SGSN_Server

Source Field

gtpMessagesSent

Source Section

TPSuccessFail

gtpOctetsReceived

Number of TPDU octets received from all SGSNs, GGSNs and RNC's. (aggregated TP)

Data Source

SGSN_Server

Source Field

gtpOctetsReceived

Source Section

TPSuccessFail

gtpOctetsSent

Number of TPDU octets sent to all SGSNs, GGSNs and RNC's. (aggregated TP)

Data Source

SGSN_Server

Source Field

gtpOctetsSent

Source Section

TPSuccessFail

maximumTPCpuUsage

The maximum percent TP CPU usage over a granularity period.

Data Source

SGSN_Server

Source Field

maximumTPCpuUsage

Source Section

TPSystemResources

nbrPcktsDuplicated

Number of packets duplicated

© Copyright IBM Corp. 1999, 2009. All rights reserved.

Data Source

SGSN_Server

Source Field

nbrPcktsDuplicated

Source Section

TPSuccessFail

succGtpMessagesReceived

Number of messages successfully received from all SGSNs, GGSNs and RNC's. (aggregated TP)

Data Source

SGSN_Server

Source Field

succGtpMessagesReceived

Source Section

TPSuccessFail

© Copyright IBM Corp. 1999, 2009. All rights reserved.

Index

Updated: 2009-06-23

© Copyright IBM Corp. 1999, 2009. All rights reserved.

N

P

Updated: 2009-06-23

© Copyright IBM Corp. 1999, 2009. All rights reserved.

R

S

Updated: 2009-06-23

T

© Copyright IBM Corp. 1999, 2009. All rights reserved.

U

V

© Copyright IBM Corp. 1999, 2009. All rights reserved.