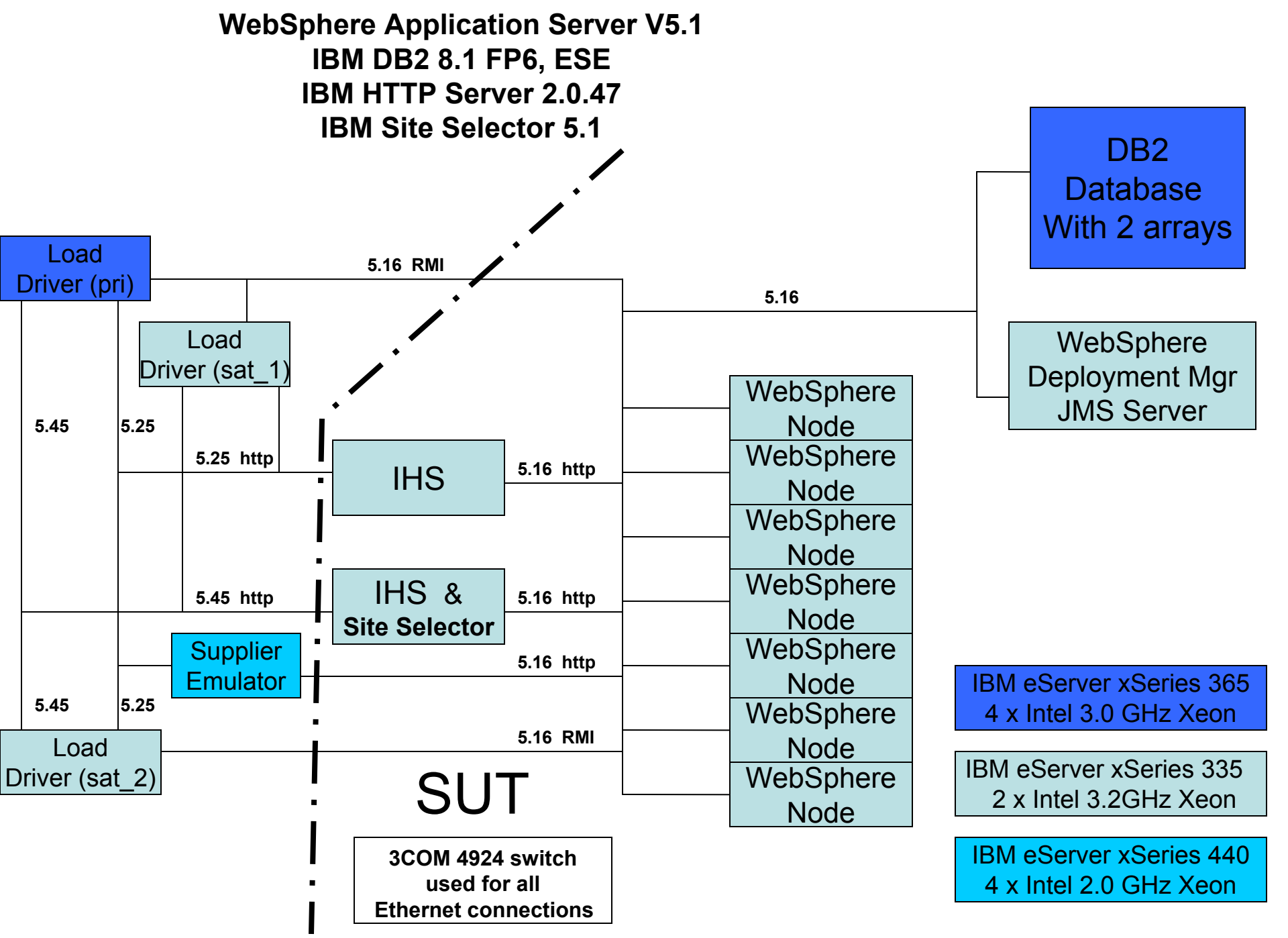
WebSphere Application Server V5.1
IBM DB2 8.1 FP6, ESE
IBM HTTP Server 2.0.47
IBM Site Selector 5.1
DB2 Database With 2 arrays
Load Driver (pri)
5.16 RMI
5.16
Load Driver (sat_1)
WebSphere Deployment Mgr JMS Server
5.45
5.25
5.25 http
IHS
5.16 http
WebSphere Node
WebSphere Node
WebSphere Node
WebSphere Node
WebSphere Node
WebSphere Node
WebSphere Node
5.45 http
IHS &
Site Selector
5.16 http
Supplier Emulator
5.16 http
5.45
5.25
5.16 RMI
Load Driver (sat_2)
SUT
3COM 4924 switch used for all Ethernet connections
IBM eServer xSeries 365
4 x Intel 3.0 GHz Xeon
IBM eServer xSeries 335
2 x Intel 3.2GHz Xeon
IBM eServer xSeries 440
4 x Intel 2.0 GHz Xeon