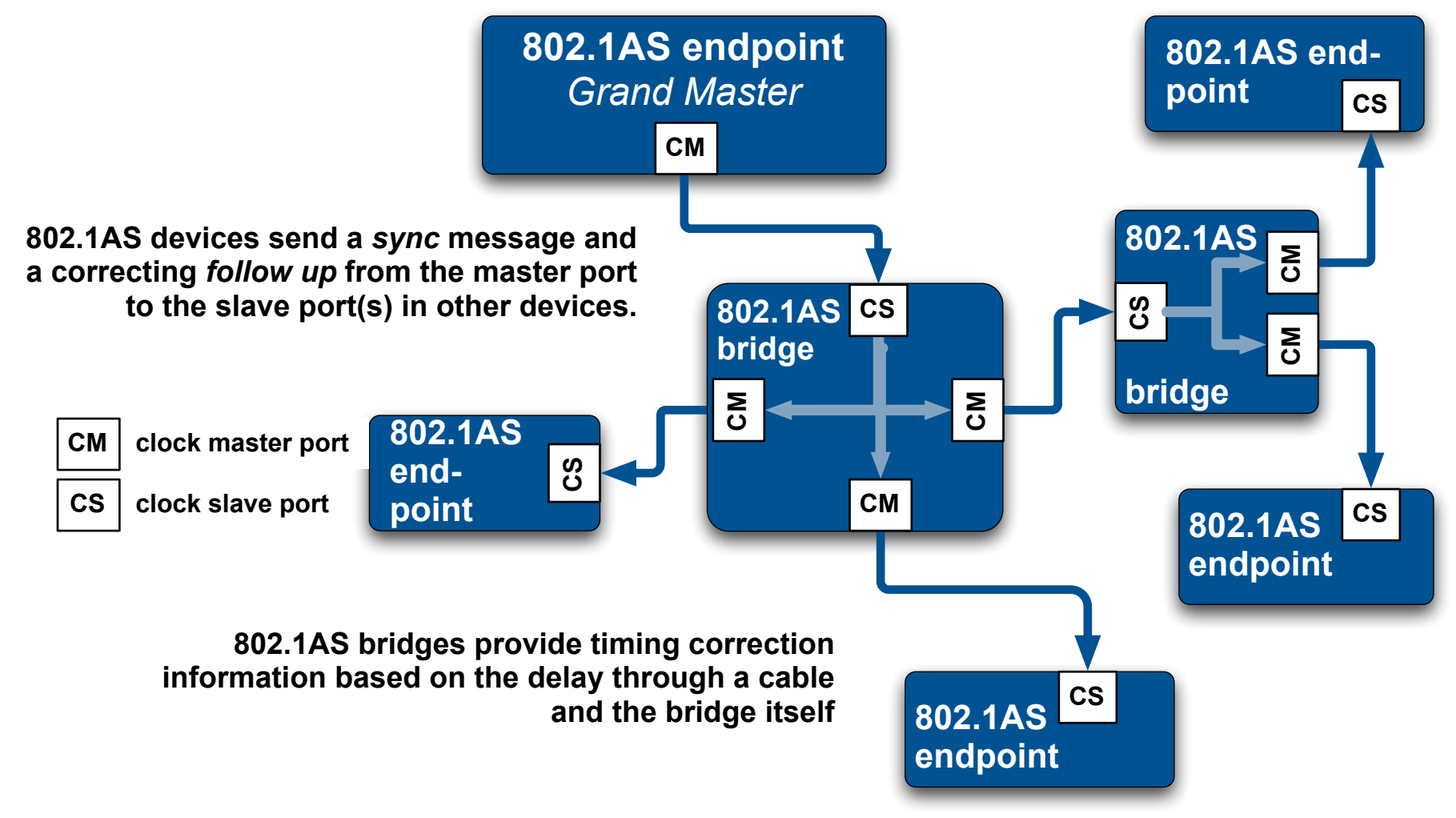
802.1AS endpoint
Grand Master
CM
802.1AS end-point
CS
802.1AS devices send a *sync* message and a correcting *follow up* from the master port to the slave port(s) in other devices.
802.1AS bridge
CS
CM
CM
CM
802.1AS
CM
CS
CM
bridge
CM clock master port
CS clock slave port
802.1AS end-point
CS
802.1AS endpoint
CS
802.1AS bridges provide timing correction information based on the delay through a cable and the bridge itself
802.1AS endpoint
CS