DWG NO 89A0228

REVISIONS			
SYM	DESCRIPTION	APPROVED	DATE
A	PRODUCTION RELEASE PER EN 80364		1/7/72

J. Spencer
Director
Engineering Operations

T. H. Sweere
Director
Systems Engineering

DR	Sue Johnson	10-1-71
CHK		1-7-72
DSGN		
ENGR		
APPD		12/3/71
APPD		12/3/71

THIS DOCUMENT MAY CONTAIN PROPRIETARY INFORMATION AND SUCH INFORMATION MAY NOT BE DISCLOSED TO OTHERS FOR ANY PURPOSE OR USED TO PRODUCE THE ARTICLE OR SUBJECT, WITHOUT WRITTEN PERMISSION FROM VDM

varian data machines /a varian subsidiary
2722 michelson drive / irvine / california / 92664

TITLE
SOFTWARE PERFORMANCE SPECIFICATION
ASYNCHRONOUS SERIAL CONTROLLER TEST

CODE IDENT NO.	SIZE	DWG NO.	REV
21101	A	89A0228	A
SCALE		SHEET 1 OF 70	

96A0153-0005

TABLE OF CONTENTS

SECTION	TITLE	PAGE
1	TEST PROGRAM OVERVIEW	3
1.1	Introduction	3
1.2	Program Design Overview	3
1.2.1	Sense Mode	3
1.2.2	BIC Mode	3
1.2.2.1	BIC Transmit	3
1.2.2.2	BIC Receive	3
1.2.3	PIM Mode	3
1.3	Hardware Summary	4
2	EXTERNAL SPECIFICATIONS	5
2.1	General	5
2.2	Loading Procedure	5
2.3	Operating Procedure	5
2.3.1	Teletype Mode	5
2.3.1.1	Loading the UASC Test	5
2.3.1.2	Parameter Setupt	5
2.3.2	Console Mode	7
2.3.2.1	Load the UASC Test	7
2.3.2.2	Parameter Setup	7
2.3.3	Operating in Sense Mode	8
2.3.3.1	Method of Test	8
2.3.3.2	Messages and Their Meanings	8
2.3.4	Operating in BIC Mode	9
2.3.4.1	Operating in BIC Read Mode	9
2.3.4.1.1	Method of Test	9
2.3.4.1.2	Messages and Their Messages	9
2.3.4.2	Operating in BIC Write Mode	10
2.3.4.2.1	Method of Test	10
2.3.4.2.2	Messages and Their Meanings	10
2.4	Sense Switch Settings	12
2.5	Messages	12
2.6	Halts	13
3	INTERNAL SPECIFICATION	
3.1	Component Specifications	
3.2	Flowcharts	
4	TEST SPECIFICATIONS	69
4.1	Objectives	69
4.2	Configurations	69
4.3	Detailed Descriptions	69

SECTION 1
TEST PROGRAM OVERVIEW

1.1 INTRODUCTION

The purpose of this program is to provide the user with an adaptable routine to test the operational status of the Universal Asynchronous Serial Controller (UASC) and to assist in isolating malfunctions.

1.2 PROGRAM DESIGN OVERVIEW

The UASC test program is designed to operate with the 620 Test Executive which provides all the user interface routines, utility functions and standard subroutines. Consequently, the Test Executive must be loaded prior to operating the UASC (see Software Performance Specification No. 89A0122).

1.2.1 Sense Mode

512 words are generated from the selected pattern, transmitted under sense mode, received under sense mode, and compared. This will cycle continuously until sense switch 3 is set. At which time the program, if in teletype mode, will type the number of passes and return to the pattern message.

1.2.2 BIC Mode

1.2.2.1 BIC Transmit

512 words are generated from the selected pattern, transmitted under BIC mode, received under sense mode, and compared. This will cycle continuously until sense switch 3 is set. At which time the program, if in teletype mode, will type the number of passes and return to the pattern message.

1.2.2.2 BIC Receive

512 words are generated from the selected pattern, transmitted under sense mode, received under BIC mode, and compared. This will cycle continuously until sense switch 3 is set. At which time the program, if in teletype mode, will type the number of passes and return to the pattern message.

1.2.3 PIM Mode

The program provides for operating under the program interrupt mode in either sense, BIC transmit or BIC receive. The program functions as above.

1.3 HARDWARE SUMMARY

The normal minimum hardware configuration for the UASC test program is one 4K (minimum) 620 series computer, one ASR teletype (optional) and a UASC with test connector. No mainframe options or other peripherals are required.

In the absence of a teletype the program may be supplied in a form suitable for other input media (card reader, paper tape, etc.) and executed in the console mode.

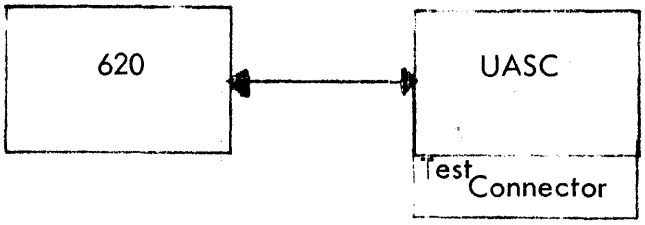

SECTION 2
EXTERNAL SPECIFICATIONS

2.1 GENERAL

The external specification provides all the operating procedures and information pertinent to user interface. The UASC test is normally loaded and executed via teletype keyboard commands from the user. The 620 Test Executive program is the software interface for accomplishing these functions.

2.2 LOADING PROCEDURE

The 620 Test Executive must be loaded before the UASC test program will operate correctly in either mode. All of the teletype input/output subroutines are resident in the Test Executive and will be called by the test program.

a. Load the Test Executive, which includes the binary object tape loader, per the procedure outlined in the Test Executive external specifications, (89A0122).

b. The individual test tapes begin with leader. Position the leader preceeding the test program in the reader.

2.3 OPERATING PROCEDURE

2.3.1 Teletype Mode

The 620 Test Executive must be in the teletype mode.

2.3.1.1 Loading the UASC Test

Type L. The test tape will be loaded, and execution will take place automatically.

2.3.1.2 Parameter Setup

Typeout: Universal Asynchronous Serial Controller Test
Response: (None)

Typeout: UASC DA
Response: A 2 digit octal number for the UASC device address followed by a comma or period. (If sense switch 3 is set, control is returned to the Exec.)

Typeout: DATA LENGTH
Response: A single digit number for data word length. (If SS3 is set, control is returned to the Exec.)

Typeout: PATTERN
Response: A single alphabetic character. A for an alternating pattern, F for a fixed pattern, or I for an incrementing pattern followed by a 3 digit octal number for the initial pattern followed by a comma or period. NOTE: If the following conditions are not to be changed, type C for continue as the first and only character of this response. (If SS3 is set, control is returned to the UASC DA message.)

Typeout: PIM REQUIRED
Response: A single alphabetic character. Y for yes, N for no (if SS3 is set, control is returned to the pattern message).

Typeout: PIM DA
NOTE: If the response to PIM required is N, this message will not appear.
NOTE: Once the PIM device address is input, this message will not appear unles the program is restarted from the beginning.
Response: A 2 digit octal number for the PIM device address followed by a comma or period. (If SS3 is set, control is returned to the pattern message.)

Typeout: TX INT LOC
NOTE: If the response to PIM REQUIRED is N, this message will not appear.
Response: A 1 - 6 digit octal number for the transmit interrupt location.

Typeout: RX INT LOC
NOTE: If the response to PIM required is N, this message will not appear.
Response: A 1 - 6 digit octal number for the receive interrupt location.

Typeout: ER INT LOC
NOTE: If the response to PIM required is N, this message will not appear.
Response: A 1 - 6 digit octal number for the error interrupt location.

Typeout: MASK
NOTE: If the response to PIM required is N, this message will not appear.
Response: A 3 digit octal number for the PIM mask.

Typeout: MODE
Response: Two alphabetic characters. SE for sense mode or BI for BIC mode. (If SS3 is set,control is returned to the pattern message.)

If Sense Mode is selected, no further setup is required.

Typeout: BIC DA
NOTE: Once the BIC device address is input, this message will not appear unles the program is restarted from the beginning.
Response: A 2 digit octal number for the BIC device address followed by a comma or period. (If SS3 is set, control is returned to the pattern message.)

Typeout: BIC DIRECTION
Response: A single alphabetic character.R for sense mode write, BIC mode read, T for BIC mode write, sense mode read. (If SS3 is set, control is returned to the pattern message.)

This completes the UASC setup.

2.3.2 Console Mode

The 620 Test Executive must be in the console mode (see section 2 of 89A0122).

2.3.2.1 Load the UASC Test

(See section 2 of 89A0122.)

2.3. 2.2 Parameter Setup

Start the test at location 0500. Observe the U register for the appropriate halt instruction. At halt instruction 01 set A = UASC device address, and B = Data length (037 for 5 bit, 077 for 6 bit, 0177 for 7 bit, 0377 for 8 bit) press run. At halt instruction 02 set A = pattern type (0 = ALT, 06 = FIX, 011 = INC) and B = pattern configuration. Press run at halt instruction 03 set A = PIM device address (if no PIM is required set A = 0) press run. At halt instruction 04 (if PIM device address $\neq$ 0) set A = transmit interrupt location, B = receive interrupt location, and X = error interrupt location. Press Run. At halt instruction 5 set A = mode (0 = sense, 1 = BIC), B = BIC device address, X = BIC direction (0 = receive, 1 = transmit) press run. The program will run to halt instruction 0704 at which time the A register will be minus for a functioning sense option or the A register will be positive or zero for a non-functioning sense option. Press run to continue test.

2.3.3 Operating in Sense Mode

A quick test of the UASC is made to determine if the data length is correct and to see if the sense option is functioning.

2.3.3.1 Method of Test

The program builds 512 words to be transmitted, outputs them and reads them back. When all 512 words have been read, a compare of transmitted to received data is made. Errors and malfunctions are reported to the operator via teletype messages or halts.

2.3.3.2 Messages and Their Meanings

Message: TRANSMIT NOT READY
Meaning: After initializing the controller the output section was not immediately ready.

Message: RECEIVE SHOULD NOT BE READY
Meaning: After initializing the controller the input section was immediately ready.

Message: LENGTH ERROR
Meaning: The length selected by the operator does not match that of the controller.

Message: NON-FUNCTIONING SENSE OPTION
Meaning: Either the sense option is not installed or the sense option is malfunctioning.

Message: FUNCTIONING SENSE OPTION
Meaning: The sense option is installed and functioning.

Message: CONTROLLER NOT READY
Meaning: A timeout has occurred while awaiting a response from the UASC.

Message: BUFFER SIZE ERROR.
Meaning: The size of either the input or output buffers was not 512 words.

Message: ERROR i WORD j TX k RX l
Meaning: The read error status of the jth word was set (i = error: 1 = input overflow error, 2 = input parity error, 3 = input overflow error and input parity error, 4 = frame error or break, 5 = input overflow, error and frame error or break, 6 = input parity error and frame error or break, 7 = input overflow error and input parity error and frame error or break) k = the transmitted character, l = the

received character.

Message: CMP ERR WORD j TX k RX l m
Meaning: A compare error at word j has occurred between the transmitted character k and the received character l with m being the exclusive ORing of the two characters.

2.3.4 Operating in BIC Mode

2.3.4.1 Operating in BIC Read Mode

A quick test of the UASC is made to determine if the data length is correct and to see if the sense option is functioning.

2.3.4.1.1 Method of Test

The program builds 512 words to be transmitted, outputs them and reads them back. When all 512 words have been read a compare of transmitted to received data is made. Errors and malfunctions are reported to the operator via teletype messages or halts.

2.3.4.1.2 Messages and Their Meanings

Message: TRANSMIT NOT READY
Meaning: After initializing the controller the output section was not immediately ready.

Message: RECEIVE SHOULD NOT BE READY
Meaning: After initializing the controller input section was immediately ready.

Message: LENGTH ERROR
Meaning: The length selected by the operator does not match that of the controller.

Message: NON-FUNCTIONING SENSE OPTION
Meaning: Either the sense option is not installed or the sense option is malfunctioning.

Message: FUNCTIONING SENSE OPTION
Meaning: The sense option is installed and functioning.

Message: CONTROLLER NOT READY
Meaning: A timeout has occurred while awaiting a response from the UASC.

Message: BIC NOT READY
Meaning: A timeout has occurred while awaiting a response from the BIC.

Message: BIC ABNORMAL
Meaning: The BIC has reported an abnormal condition.

Message: BUFFER SIZE ERROR
Meaning: The size of either the input or output buffers was not 512 words.

Message: ERROR i WORD j TX k RX l
Meaning: The read error status of the jth word was set (i = error: 1 = input overflow error, 2 = input parity error, 3 = input overflow error and input parity error, 4 = frame error or break, 5 = input overflow, error and frame error or break, 6 = input parity error and frame error or break, 7 = input overflow error and input parity error and frame error or break) k = the transmitted character, l = the received character.

Message: CMP ERR WORD j TX k RX l m
Meaning: A compare error at word j has occurred between the transmitted character k and the received characters l with m being the exclusive ORing of the two characters.

2.3.4.2 Operating in BIC Write Mode

A quick test of the UASC is made to determine if the data length is correct and to see if the sense option is functioning.

2.3.4.2.1 Method of Test

The program builds 512 words to be transmitted, outputs them and reads them back. When all 512 words have been read a compare of transmitted to received data is made. Errors and malfunctions are reported to the operator via teletype messages or halts.

2.3.4.2.2 Messages and Their Meanings

Message: TRANSMIT NOT READY
Meaning: After initializing the controller the output section was not immediately ready.

Message: RECEIVE SHOULD NOT BE READY
Meaning: After initializing the controller, the input section was immediately ready.

Message: LENGTH ERROR
Meaning: The length selected by the operator does not match that of the controller.

Message: NON-FUNCTIONING SENSE OPTION
Meaning: Either the sense option is not installed or the sense option is malfunctioning.

Message: FUNCTIONING SENSE OPTION
Meaning: The sense option is installed and functioning.

Message: CONTROLLER NOT READY
Meaning: A timeout has occurred while awaiting a response from the UASC.

Message: BIC NOT READY
Meaning: A timeout has occurred while awaiting a response from the BIC.

Message: BIC ABNORMAL
Meaning: The BIC has reported an abnormal condition.

Message: BUFFER SIZE ERROR
Meaning: The size of either the input or output buffers was not 512 words.

Message: ERROR i WORD j TX k RX l
Meaning: The read error status of the jth word was set (i = error: 1 = input overflow error, 2 = input parity error, 3 = input overflow error and input parity error, 4 = frame error or break, 5 = input overflow, error and frame or break, 6 = input parity error and frame error or break, 7 = input overflow error and input parity error and frame error or break) k = the transmitted character, l = the received character.

Message: CMP ERR WORD j TX k RX l m
Meaning: A compare error at word j has occurred between the transmitted character k and the received characters l with m being the exclusive ORing of the two characters.

2.4 SENSE SWITCH SETTINGS

Switch 1 off: Print all error messages.
on: Do not print routine error messages.

Switch 2 off: Do not halt on 9 errors.
on: Halt when errors detected. (This halt will occur after the error message is typed if SS1 is off.)

Switch 3 off: Normal operation.
on: Return as soon as possible to the pattern message or halt instruction 01 (see section 2.3.1.2).

2.5 MESSAGES

Universal Asynchronous Serial Controller Test
UASC DA
DATA LENGTH
PATTERN
PIM REQUIRED
PIM DA
XMIT INT LOC
RCVE INT LOC
ERR INT LOC
MASK
MODE
BIC DA
BIC DIRECTION
TRANSMIT NOT READY
RECEIVE SHOULD NOT BE READY
LENGTH ERROR
NON-FUNCTIONING SENSE OPTION
FUNCTIONING SENSE OPTION
BIC ABNORMAL
BIC NOT READY
BUFFER SIZE ERROR
CONTROLLER NOT READY
ERROR n WORD nnnnnn TX nnnnnn RX nnnnnn
CMP ERR WORD nnnnnn TX nnnnnn RX nnnnnn nnnnnn

2.6 HALTS

Instruction	Register Setting or Meaning
01	Set A = UASC device address B = data length (037 = 5 bit, 077 = 6 bit, 0177 = 7 bit, 0377 = 8 bit)
02	Set A = pattern type (1 = alternating, 6 = fixed, 011 = incrementing) B = initial pattern configuration
03	Set A = PIM device address (if no PIM required, set A = 0)
04	This is an optional halt Set A = transmit interrupt location B = receive interrupt location X = error interrupt location
05	Set A = mode (0 = sense, 1 = BIC) B = BIC device address X = BIC direction (0 = receive, 1 = transmit)
040	"Controller not ready"
041	"Buffer size error"
042	"BIC not ready"
043	"BIC abnormal"
0102	"Hardware detected error" Read A = word within the buffer B = data word transmitted X = data word received with the flags in the most significant part of the word.
0103	"Compare error" Read A = word within the buffer B = data word transmitted C = data word received

Instruction	Register Setting or Meaning
0700	Output not ready
0701	Input should not be ready
0702	Length error
0704	A < 0 Functioning sense option
	A > 0 Non-functioning sense option

SECTION 3
INTERNAL SPECIFICATION

3.1 COMPONENT SPECIFICATIONS

Title:	Sense Switch 3 Return
Symbolic Name:	SS3R
Purpose:	Termination of Test
Description:	If in teletype mode, type out the octal number of passes mode through the previous test. If in console mode, returns to initial parameter setup.
Entry Points:	SS3R
Calling Sequence:	JSS3 SS3R
Entrance Parameters:	None
Exit Point:	CMOD or TM5
Exit Parameters:	Not applicable

Table or Files Modified or Read: Pass is set to zero.

Tables or Files Created:	Not applicable
Called By:	OUTC, OUTE, OUTD
Called From:	SENM, BICW, BICR, QKY, SCK
Exception Conditions:	Not applicable
Timing:	Not applicable
Size:	26 octal words

Title:	Console Mode Parameter Input
Symbolic Name:	CMOD
Purpose:	Set up parameter values from the console.
Description:	The routine clears all registers and halts at various points to allow for operator inputs.
Entry Points:	CMOD, CMO, CM2, CM3
Calling Sequence:	LDA $CON JAZ CMOD
Entrance Parameters:	Not applicable
Exit Point:	SENM, BICR, BICW
Exit Parameters:	Operating parameters

Tables or Files Modified or Read: DA, DLGH, PATT, PTRN, PDA, PIMR, BDA, MASK

Tables or Files Created:	Not applicable
Called By:	TDA, TPDA, SETI, TBDA
Called From:	Start and end of test.
Exception Conditions:	Not applicable
Timing:	Not applicable
Size:	65 octal words

Title:	Teletype Mode Parameter Input
Symbolic Name:	TMOD
Purpose:	Set up parameter values from the teletype.
Description:	The routine asks for and accepts parameter values from the operator.
Entry Points:	TMOD, TDA, TM5, TPDA, TBDA
Calling Sequence:	JMP TMOD
Entrance Parameters:	Not applicable
Exit Point:	SENM, BICR, BICW
Exit Parameters:	Operating parameters

Tables or Files Modified or Read: DA, DLGH, PATT, PTRN, PDA, PIMR, BDA, MASK

Tables or Files Created:	Not applicable
Called By:	INPB, INPE, INPG, OCT1, OUTD, SETI
Called From:	SS3R, Start and end of test.
Exception Conditions:	Not applicable
Timing:	Not applicable
Size:	642 octal words

Title:	Sense In, Sense Out Mode
Symbolic Name:	SENM
Purpose:	Test the UASC in sense mode with or without PIM.
Description:	Outputs 512 words of data, inputs 512 words of data, and monitors and flags hardware errors.
Entry Points:	SENM
Calling Sequence:	JMP SENM
Entrance Parameters:	Operating parameters.
Exit Point:	SCK, SS3R
Exit Parameters:	Not applicable
Tables or Files Modified or Read:	JUMP, U1, U2, PIM BI
Tables or Files Created:	Not applicable
Called By:	QKY, FOB, IPIM, TOUT, CUR, BSE
Called From:	CMOD, TMOD
Exception Conditions:	Not applicable
Timing:	Approximately 514 decimal UASC word times.
Size:	151 octal words

Title:	Sense In, BIC Out
Symbolic Name:	BICW
Purpose:	Test the UASC using sense in mode and BIC out mode with or without PIM.
Description:	Outputs 512 words of data, inputs 512 words of data, and monitors and flags hardware errors.
Entry Points:	BICW
Calling Sequence:	JMP BICW
Entrance Parameters:	Operating parameters
Exit Point:	SCK, SS3R
Exit Parameters:	Not applicable
Tables or Files Modified or Read:	JUMP, U1, PIM, BI
Tables or Files Created:	Not applicable
Called By:	QKY, FOB, IPIM, TOUT, BNR, CNR, BAB, BSE
Called From:	CMOD, TMOD
Exception Conditions:	Not applicable
Timing:	Approximately 514 decimal UASC word times.
Size:	175 octal words

Title:	BIC In, Sense Out
Symbolic Name:	BICR
Purpose:	Test the UASC using BIC in mode and sense out mode with or without PIM.
Description:	Outputs 512 words of data, inputs 512 words of data, and monitors and flags hardware errors.
Entry Points:	BICR
Calling Sequence:	JMP BICR
Entrance Parameters:	Operating parameters
Exit Point:	SCK, SS3R
Exit Parameters:	Not applicable
Tables or Files Modified or Read:	JUMP, U2, PIM, BI
Tables or Files Created:	Not applicable
Called By:	QKY, FOB, IPIM, TOUT, BNR, CNR, BAB, BSE, BERR
Called From:	
Exception Conditions:	Not applicable
Timing:	Approximately 514 decimal UASC word times.
Size:	174 octal words

Title:	Data check
Symbolic Name:	SCK
Purpose:	To check the input buffer for error flags and to compare output to input data.
Description:	Not applicable
Entry Points:	SCK
Calling Sequence:	JMP SCK
Entrance Parameters:	Not applicable
Exit Point:	Return to the contents of JUMP.
Exit Parameters:	Not applicable
Tables or Files Modified or Read:	BI, BO
Tables or Files Created:	Not applicable
Called By:	OUTD, OUTA, OUTE
Called From:	SENM, BICW, BICR
Exception Conditions:	Routine halts on errors if SS2 set or in console mode.
Timing:	Not applicable
Size:	240 octal words

Title:	BIC abnormal typeout
Symbolic Name:	BAB
Purpose:	Type the message "BIC ABNORMAL".
Description:	Not applicable
Entry Points:	BAB
Calling Sequence:	JMPM BAB
Entrance Parameters:	Not applicable
Exit Point:	Return to caller.
Exit Parameters:	Not applicable
Tables or Files Modified or Read:	Not applicable
Tables or Files Created:	Not applicable
Called By:	OUTD
Called From:	BICU, BICR
Exception Conditions:	No type out if SS1 on. Halt instruction 043 if SS1 on or in console mode.
Timing:	Not applicable
Size:	31 octal words

Title:	BIC read error
Symbolic Name:	BERR
Purpose:	Place flags in the input buffer.
Description:	The flag in the B register is ORed into the current BIC address less 1.
Entry Points:	BERR
Calling Sequence:	LDBI FLAG JMPM BERR
Entrance Parameters:	Not applicable
Exit Points:	Return to caller
Exit Parameters:	Not applicable
Tables or Files Modified or Read:	BI
Tables or Files Created:	Not applicable
Called By:	Not applicable
Called From:	BICR
Exception Conditions:	Not applicable
Timing:	Not applicable
Size:	12 octal words

Title:	BIC not ready type out
Symbolic Name:	BNR
Purpose:	Type the message "BIC NOT READY"
Description:	Not applicable
Entry Points:	BNR
Calling Sequence:	JMPM BNR
Entrance Parameters:	Not applicable
Exit Point:	Return to caller
Exit Parameters:	Not applicable
Tables or Files Modified or Read:	Not applicable
Tables or Files Created:	Not applicable
Called By:	OUTD
Called From:	BICW, BICR
Exception Conditions:	No typeout if SS1 on, halt instruction 042 if SS2 on or in console mode.
Timing:	Not applicable
Size:	33 octal words

Title:	Buffer size error type out
Symbolic Name:	BSE
Purpose:	Type the message "BUFFER SIZE ERROR"
Description:	Not applicable
Entry Points:	BSE
Calling Sequence:	JMPM BSE
Entrance Parameters:	Not applicable
Exit Point:	Return to caller
Exit Parameters:	Not applicable
Tables or Files Modified or Read:	Not applicable
Tables or Files Created:	Not applicable
Called By:	OUTD
Called From:	SENM, BICW, BICR
Exception Conditions:	No type out if SS1 on, halt instruction 041 if SS2 on if in console mode.
Timing:	Not applicable
Size:	34 octal words

Title:	Controller not ready type out
Symbolic Name:	CNR
Purpose:	Type the message "CONTROLLER NOT READY"
Description:	Not applicable
Entry Points:	CNR
Calling Sequence:	JMPM CNR
Entrance Parameters:	Not applicable
Exit Point:	Return to caller
Exit Parameters:	Not applicable
Tables or Files Modified or Read:	Not applicable
Tables or Files Created:	Not applicable
Called By:	OUTD
Called From:	SENM, BICW, BICR, QKY
Exception Conditions:	No type out if SS1 on, halt instruction 040 if SS2 on or in console mode.
Timing:	Not applicable
Size:	42 octal words

Title:	Set in device address
Symbolic Name:	DVAD
Purpose:	To place the device address into referenced I/O instructions.
Description:	The routine picks up the referenced I/O instruction, masks out the device address, replaces it with the referenced device address, and restores the instruction.
Entry Points:	DVAD
Calling Sequence:	JMPM DVAD DATA DEVICEADDRESSLOCATION DATA I/OINSTRUCTION, I/O INSTRUCTION DATA 0
Entrance Parameters:	Not applicable
Exit Point:	Return to caller following the DATA 0.
Exit Parameters:	Not applicable
Tables or Files Modified or Read:	Referenced I/O instructions
Tables or Files Created:	Not applicable
Called By:	Not applicable
Called From:	TMOD
Exception Conditions:	Not applicable
Timing:	Not applicable
Size:	24 octal words

Title:	Fill output buffer
Symbolic Name:	FOB
Purpose:	Fill the output buffer with the requested data pattern.
Description:	Not applicable
Entry Points:	FOB
Calling Sequence:	JMPM FOB
Entrance Parameters:	Not applicable
Exit Point:	Return to caller
Exit Parameters:	Not applicable
Tables or Files Modified or Read:	BO
Tables or Files Created:	Not applicable
Called By:	Not applicable
Called From:	SENM, BICW, BICR
Exception Conditions:	Not applicable
Timing:	Not applicable
Size:	21 octal words

Title:	Get next character to transmit
Symbolic Name:	GNCX
Purpose:	Return a 16 bit data word, and update for the next call according to the pattern type.
Description:	Not applicable
Entry Points:	GNCX
Calling Sequence:	JMPM GNCX
Entrance Parameters:	Not applicable
Exit Point:	Return to caller
Exit Parameters:	Data word in B
Tables or Files Modified or Read:	PTRN
Tables or Files Created:	Not applicable
Called By:	Not applicable
Called From:	FOB
Exception Conditions:	Not applicable
Timing:	Not applicable
Size:	22 octal words

Title:	Initialize PIM
Symbolic Name:	IPIM
Purpose:	Initialize the PIM if required.
Description:	Not applicable
Entry Points:	IPIM
Calling Sequence:	JMPM IPIM
Entrance Parameters:	Not applicable
Exit Point:	Return to caller
Exit Parameters:	Not applicable
Tables or Files Modified or Read:	PIM
Tables or Files Created:	Not applicable
Called By:	Not applicable
Called From:	SENM, BICW, BICR
Exception Conditions:	Not applicable
Timing:	Not applicable
Size:	15 octal words

Title:	Accept an octal input from teletype
Symbolic Name:	OCTI
Purpose:	Type the parameter message and accept an octal number.
Description:	Not applicable
Entry Points:	OCTI
Calling Sequence:	LDXI MESSAGE JMPM OCTI STA NUMBER
Entrance Parameters:	X = MESSAGE ADDRESS
Exit Point:	Return to caller to RM5
Exit Parameters:	A = NUMBER

Tables or Files Modified or Read: Not applicable

Tables or Files Created:	Not applicable
Called By:	OUTD, INPG
Called From:	TMOD
Exception Conditions:	SS3 will cause return to TM5
Timing:	Not applicable
Size:	16 octal words

Title:	PIM interrupt
Symbolic Name:	PIMI
Purpose:	Process a PIM interrupt
Description:	Decrement PIM for each interrupt
Entry Points:	PIMI
Calling Sequence:	Interrupt driven routine JMPM PIMI
Entrance Parameters:	Not applicable
Exit Point:	Returns to interrupted routine.
Exit Parameters:	Not applicable
Tables or Files Modified or Read:	Not applicable
Tables or Files Created:	Not applicable
Called By:	Not applicable
Called From:	Not applicable
Exception Conditions:	Not applicable
Timing:	Not applicable
Size:	12 octal words

Title:	Quick test of the UASC
Symbolic Name:	QKY
Purpose:	Provides a quick test of operation, data length and sense option.
Description:	Not applicable
Entry Points:	QKY
Calling Sequence:	JMPM QKY
Entrance Parameters:	Not applicable
Exit Point:	Return to caller
Exit Parameters:	Not applicable
Tables or Files Modified or Read:	Not applicable
Tables or Files Created:	Not applicable
Called By:	TYPE, TOUT, CNR, OUTC, OUTD
Called From:	SENM, BICW, BICR
Exception Conditions:	If an error occurs, the routine will halt. If in console mode, routine will halt after testing the sense option.
Timing:	Not applicable
Size:	63 octal words

Title:	Set PIM interrupt words
Symbolic Name:	SETI
Purpose:	To place a 'JMPM PIMI' in the PIM interrupt locations.
Description:	Not applicable
Entry Points:	SETI
Calling Sequence:	LDA INTERRUPTLOCATION JMPM SETI
Entrance Parameters:	A = INTERRUPT LOCATION
Exit Point:	Return to caller
Exit Parameters:	Not applicable
Tables or Files Modified or Read:	PIM INTERRUPT LOCATIONS
Tables or Files Created:	Not applicable
Called By:	Not applicable
Called From:	TMOD, CMOD
Exception Conditions:	Not applicable
Timing:	Not applicable
Size:	11 octal words

Title:	Type the messages in X
Symbolic Name:	TYPE
Purpose:	Type the message pointed to by the X register.
Description:	Not applicable
Entry Points:	TYPE
Calling Sequence:	LDXI MESSAGE JMPM TYPE
Entrance Parameters:	X = MESSAGE ADDRESS
Exit Point:	Return to caller
Exit Parameters:	Not applicable
Tables or Files Modified or Read:	Not applicable
Tables or Files Created:	Not applicable
Called By:	OUTD
Called From:	QKY
Exception Conditions:	If $CON is zero (console mode), there is no type out.
Timing:	Not applicable
Size:	10 octal words

PROGRAMMER	PROGRAM NO.	DATE	PAGE 01
CHART I.D.	CHART NAME	PROGRAM NAME	

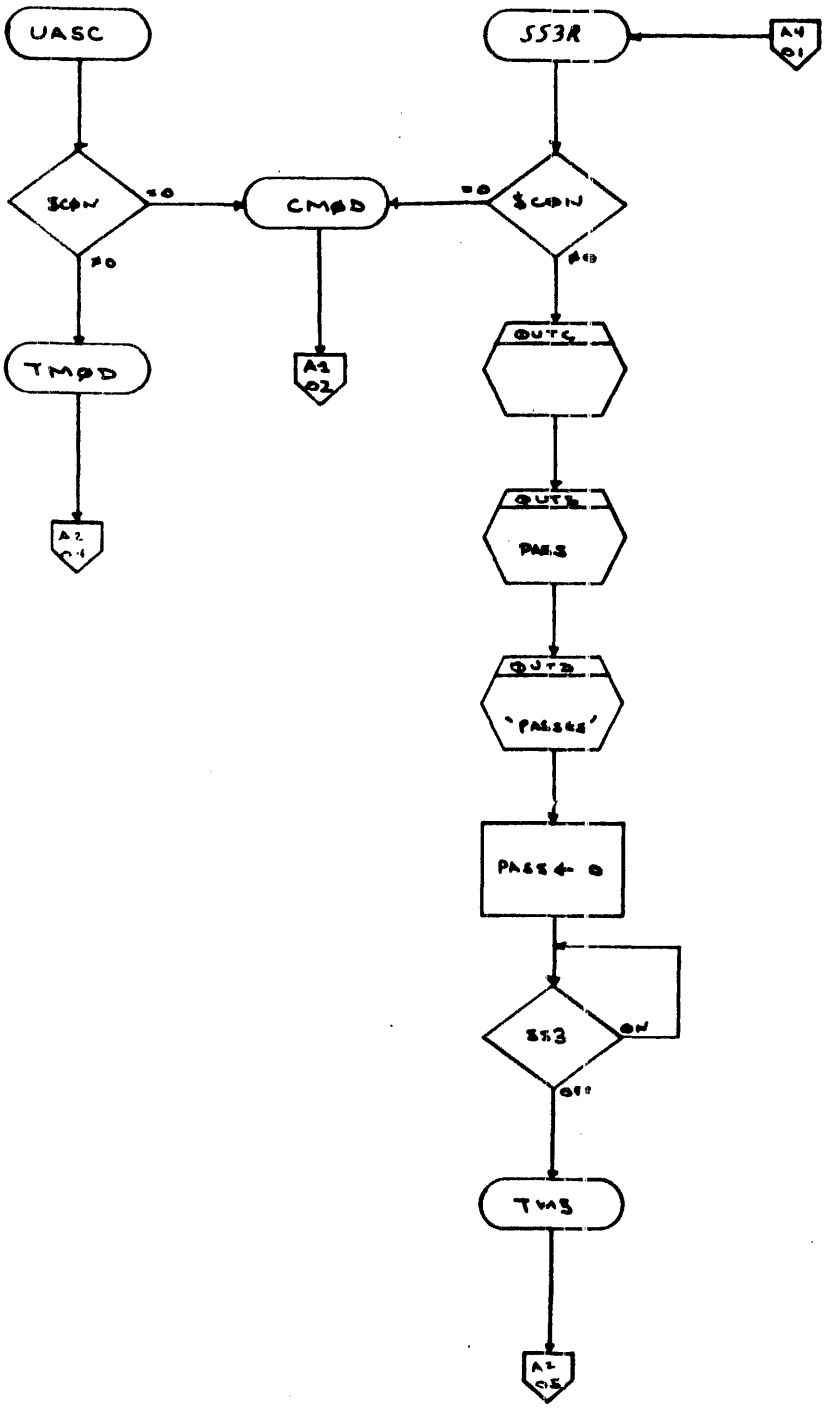

FOLD UNDER AT DOTTED LINE

FOLD UNDER AT DOTTED LINE

varian data machines, a varian subsidiary	CODE IDENT. NO.	89A0228	REV. A
	PREPARED BY	APPROVED BY	SHEET 36 OF 70

90A0048-000A

PROGRAMMER	PROGRAM NO.	DATE	PAGE 02
CHART I.D.	CHART NAME	PROGRAM NAME	

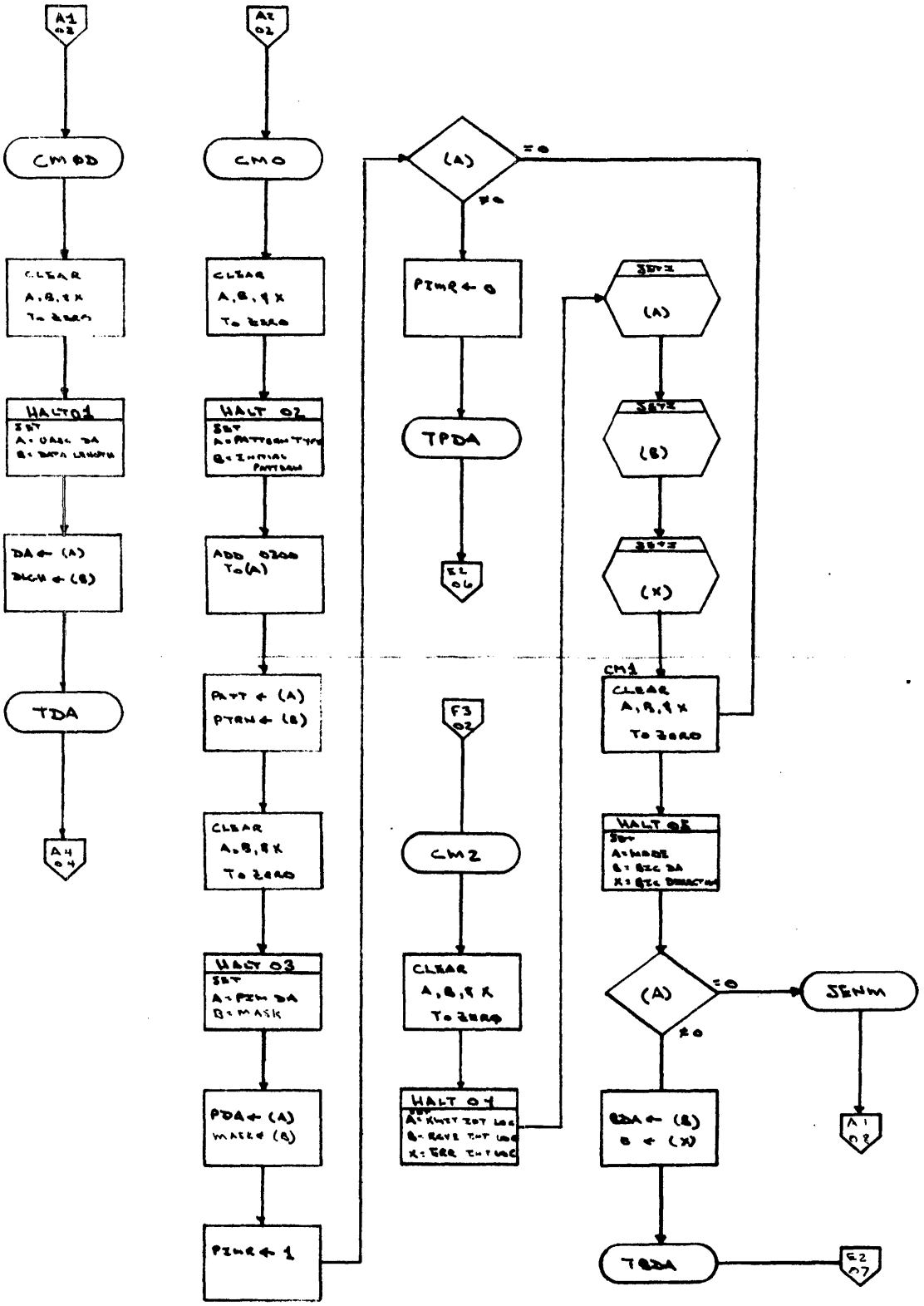

FOLD UNDER AT DOTTED LINE

FOLD UNDER AT DOTTED LINE

varian data machines a varian subsidiary	CODE IDENT. NO.	89A0228	REV. A
	PREPARED BY	APPROVED BY	SHEET 37 OF 70

90A0340-000A

PROGRAMMER	PROGRAM NO.	DATE	PAGE C3
CHART I. D.	CHART NAME	PROGRAM NAME	

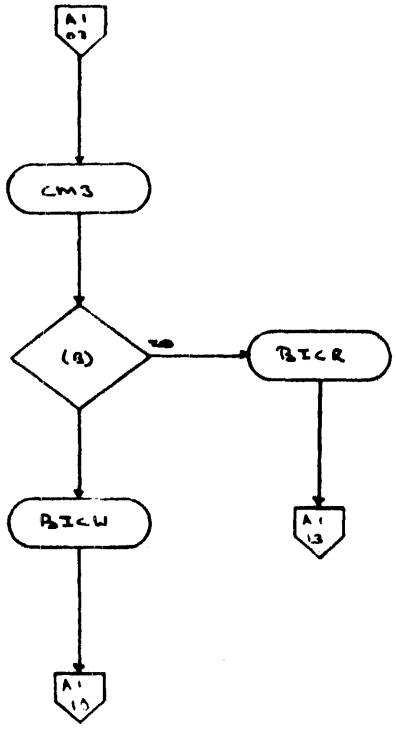

FOLD UNDER AT DOTTED LINE

FOLD UNDER AT DOTTED LINE

verian data machines a verian subsidiary	CODE IDENT. NO.	89A0228	REV. A
	PREPARED BY	APPROVED BY	SHEET 38 OF 70

90A0540-000A

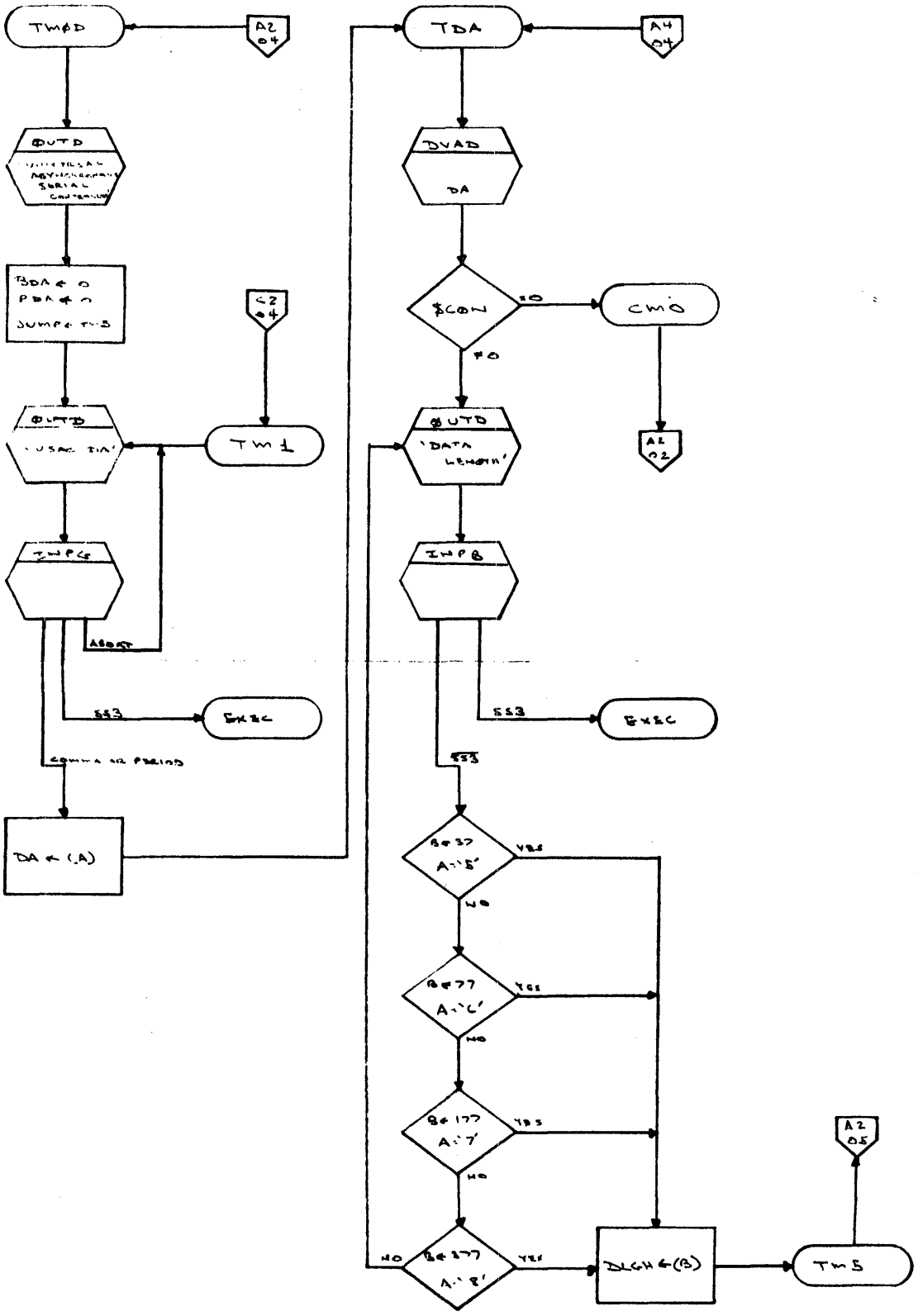

FOLD UNDER AT DOTTED LINE

FOLD UNDER AT DOTTED LINE

varian data machines, a varian subsidiary	CODE IDENT. NO.		89A0228	REV. A
	PREPARED BY	APPROVED BY	SHEET 39 OF 70	

90A0249-000A

PROGRAMMER	PROGRAM NO.	DATE	PAGE 05
CHART I.D.	CHART NAME	PROGRAM NAME	

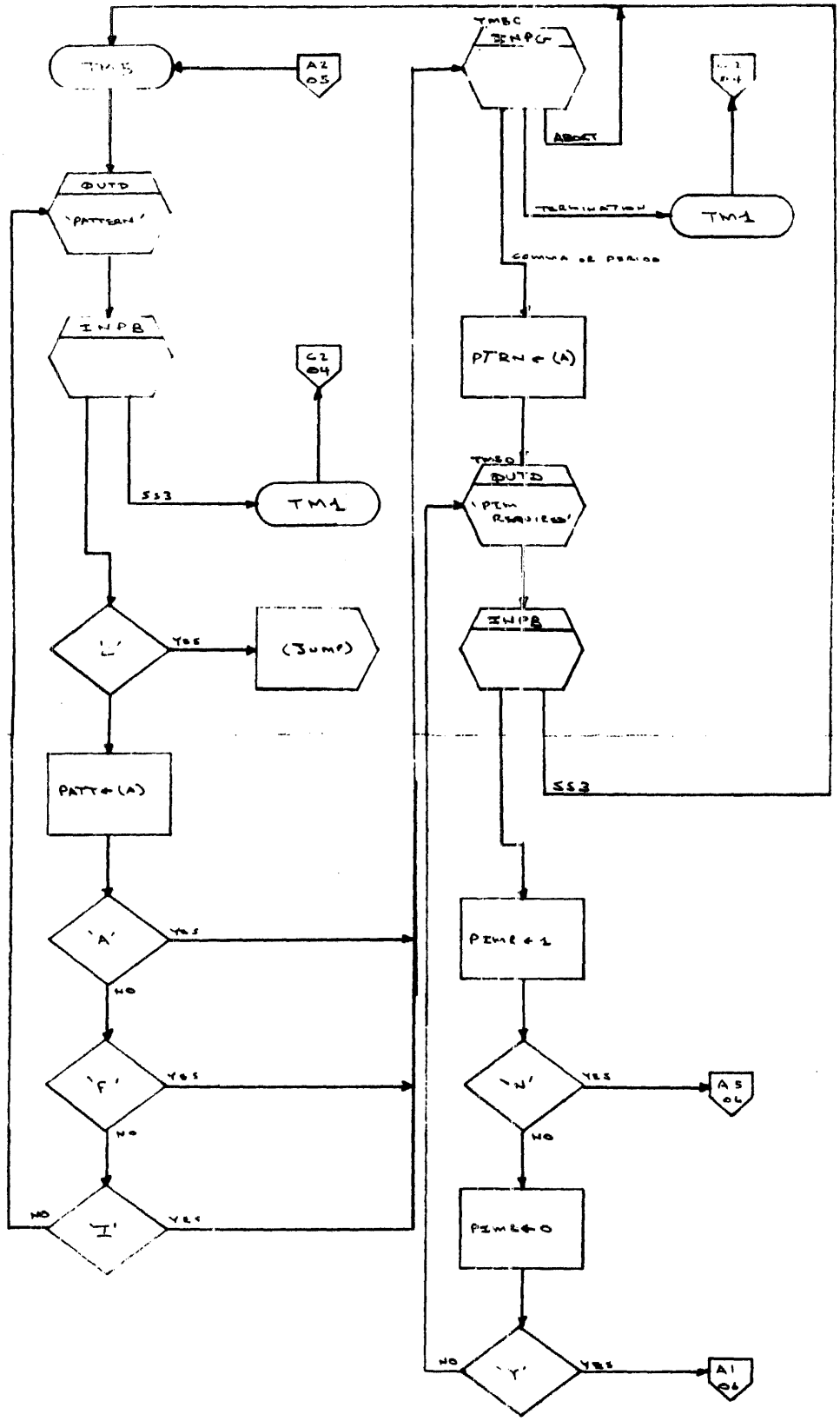

FOLD UNDER AT DOTTED LINE

FOLD UNDER AT DOTTED LINE

varian data machines a varian subsidiary	CODE IDENT. NO.	89A0228	REV. A
	PREPARED BY	APPROVED BY	SHEET 40 OF 70

PROGRAMMER	PROGRAM NO.	DATE	PAGE 06
CHART I.D.	CHART NAME	PROGRAM NAME	

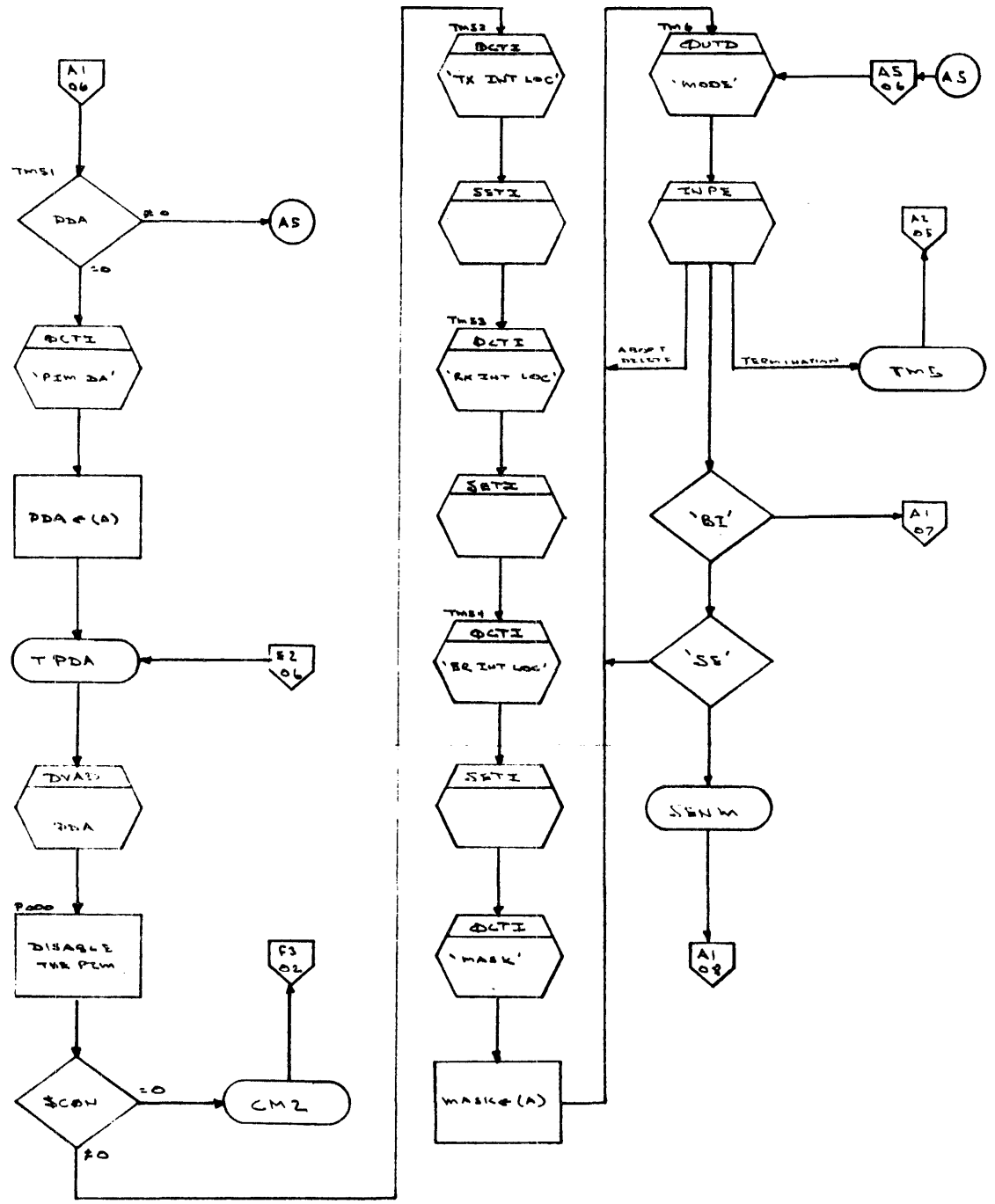

FOLD BACK AT DOTTED LINE

FOLD BACK AT DOTTED LINE

varian data machines a varian subsidiary	CODE IDENT. NO.		89A0228	REV. A
	PREPARED BY	APPROVED BY	SHEET 41 OF 70	

89A0349-000A

PROGRAMMER	PROGRAM NO.	DATE	PAGE 07
CHART I.D.	CHART NAME	PROGRAM NAME	

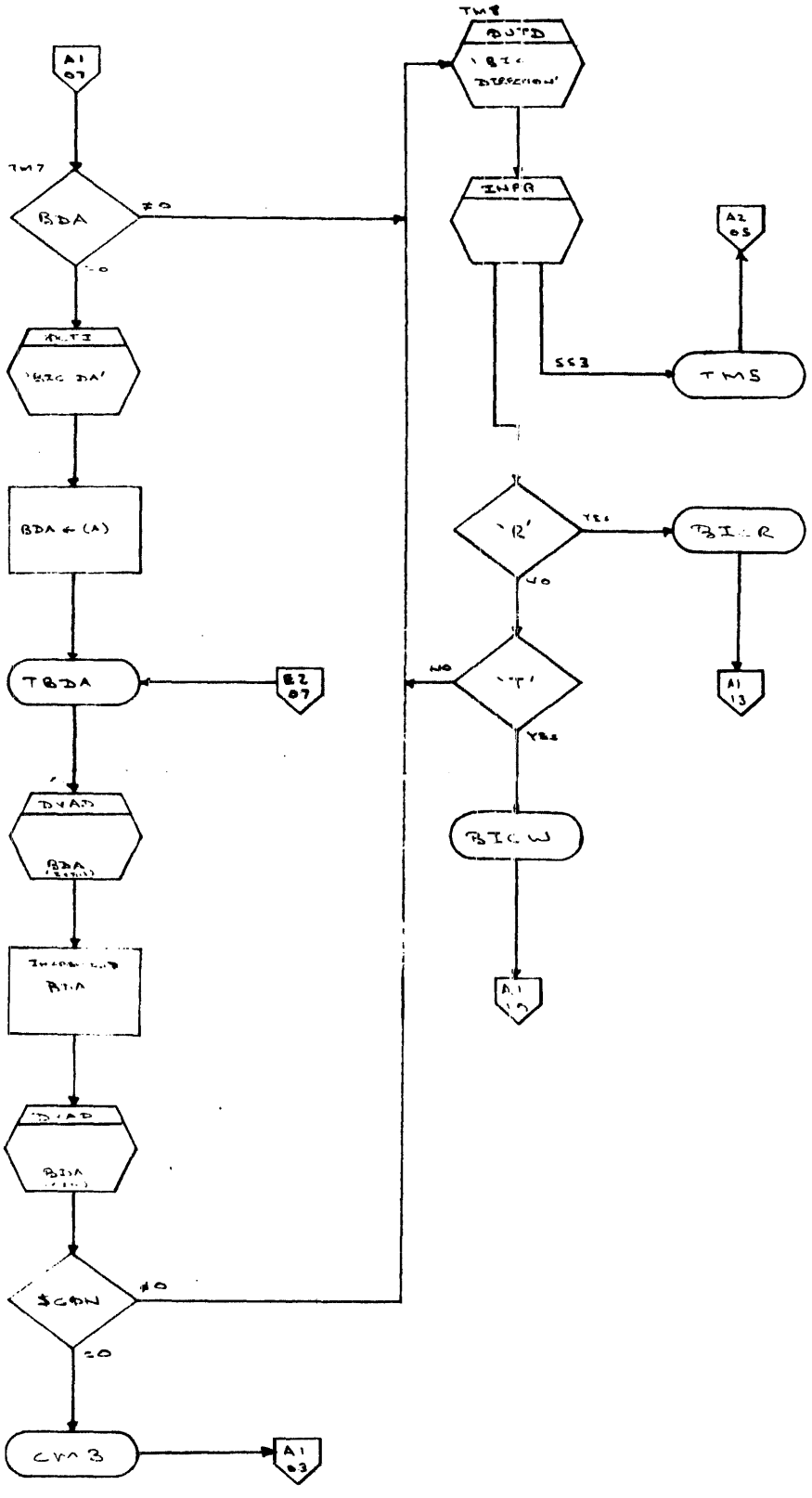

FOLD UNDER AT DOTTED LINE

FOLD UNDER AT DOTTED LINE

varian data machines a varian subsidiary	CODE IDENT. NO.	89A0228	REV. A
	PREPARED BY	APPROVED BY	SHEET 42 OF 70

90A0349-000A

PROGRAMMER	PROGRAM NO.	DATE	PAGE 08
CHART I.D.	CHART NAME	PROGRAM NAME	

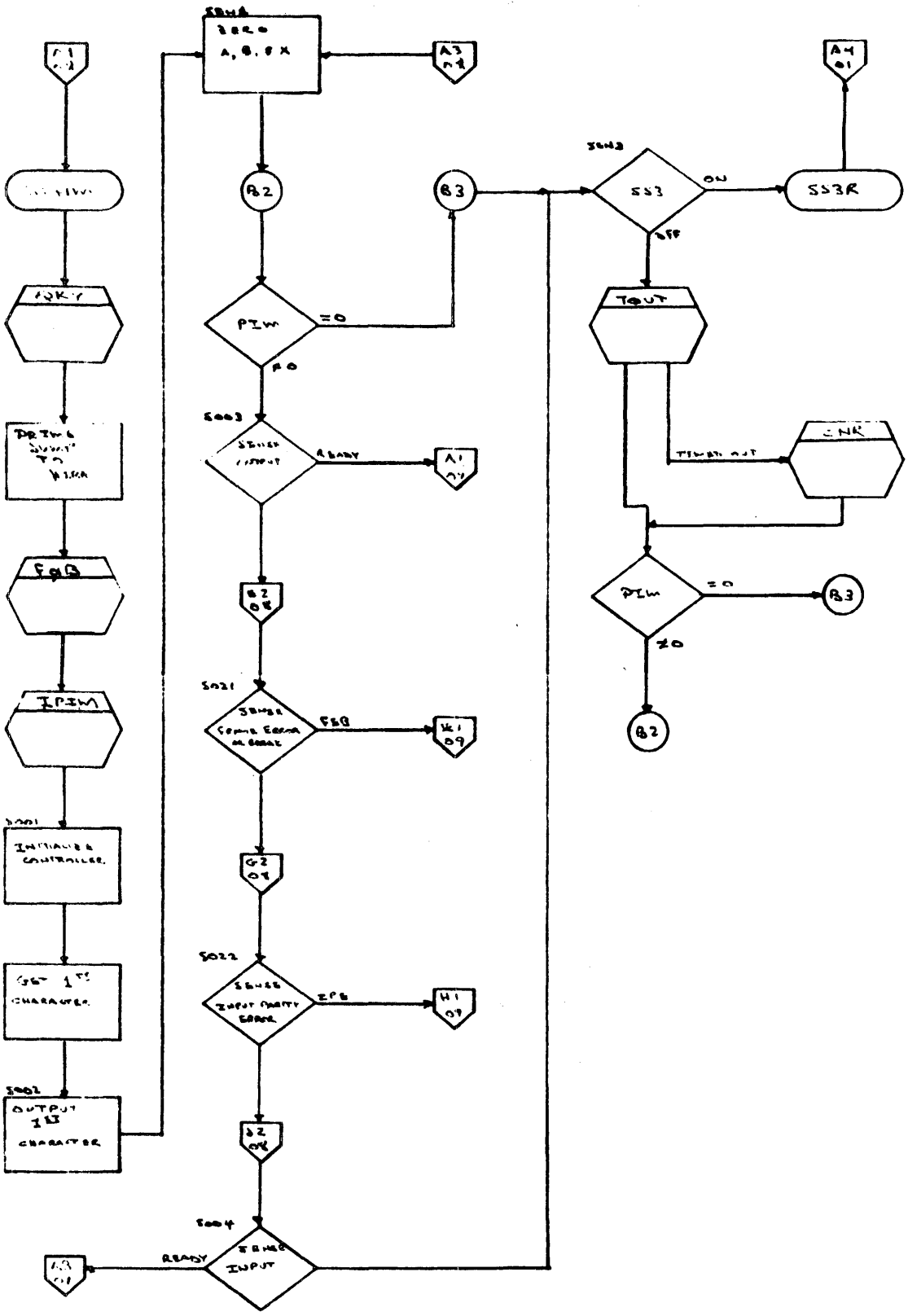

FOLD UNDER AT DOTTED LINE

FOLD UNDER AT DOTTED LINE

varian data machines a varian subsidiary	CODE IDENT. NO.	89A0228	REV. A
	PREPARED BY	APPROVED BY	SHEET 43 OF 70

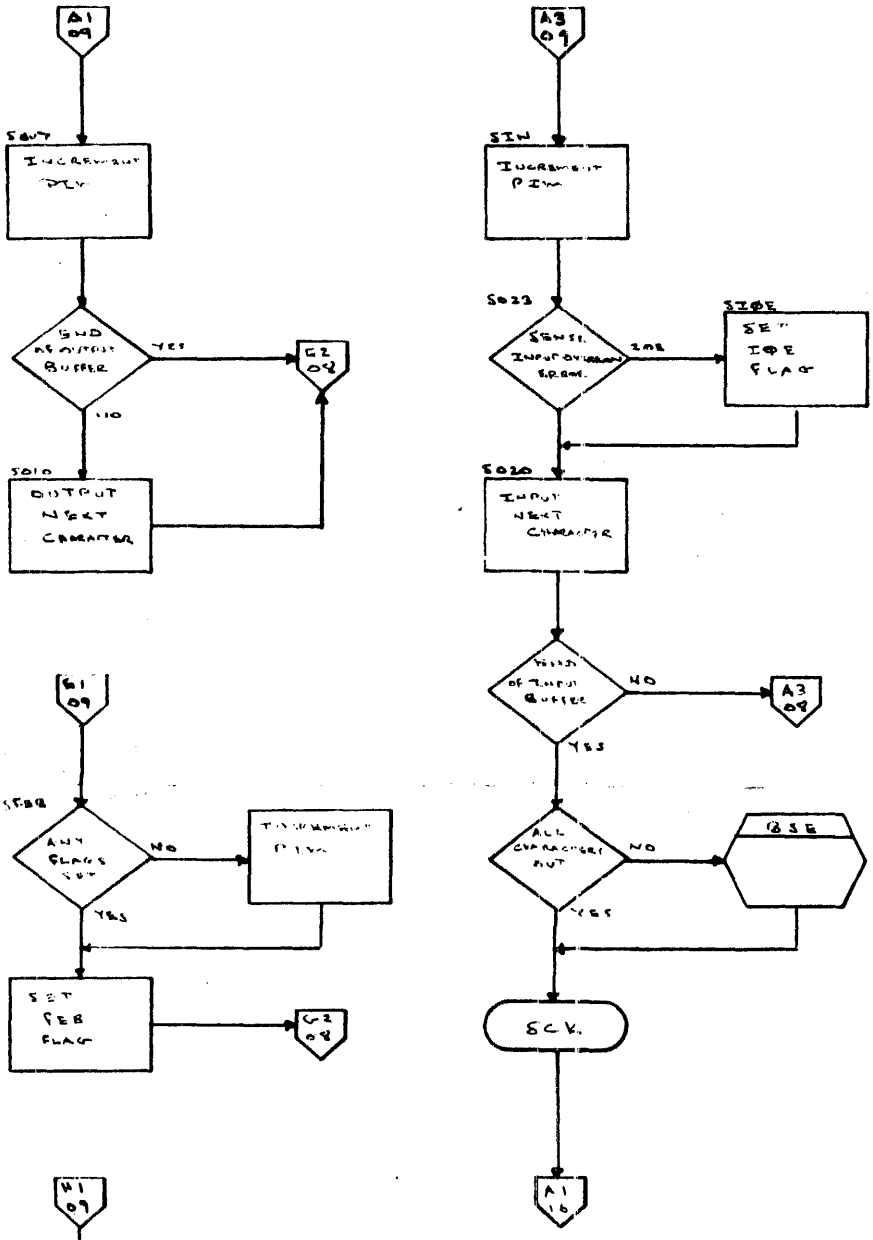

FOLD UNDER AT DOTTED LINE

FOLD UNDER AT DOTTED LINE

varian data machines a varian subsidiary	CODE IDENT. NO.	89A0228	REV. A
	PREPARED BY	APPROVED BY	SHEET 44 OF 70

PROGRAMMER	PROGRAM NO.	DATE	PAGE 10
CHART I.D.	CHART NAME	PROGRAM NAME	

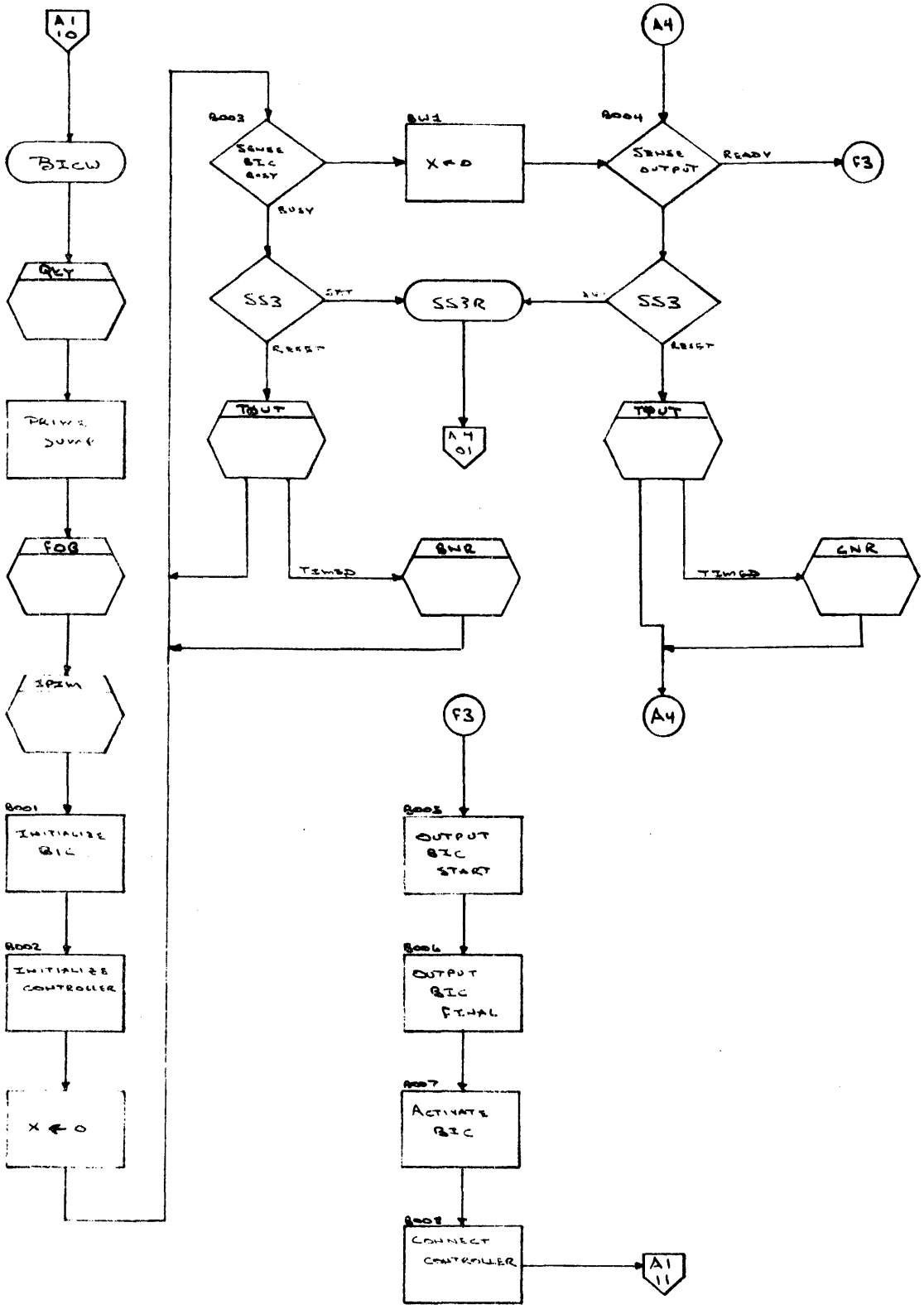

FOLD UNDER AT DOTTED LINE

FOLD UNDER AT DOTTED LINE

varian data machines a varian subsidiary	CODE IDENT. NO.	8940228	REV. A
	PREPARED BY	APPROVED BY	SHEET 45 OF 70

90A0349-000A

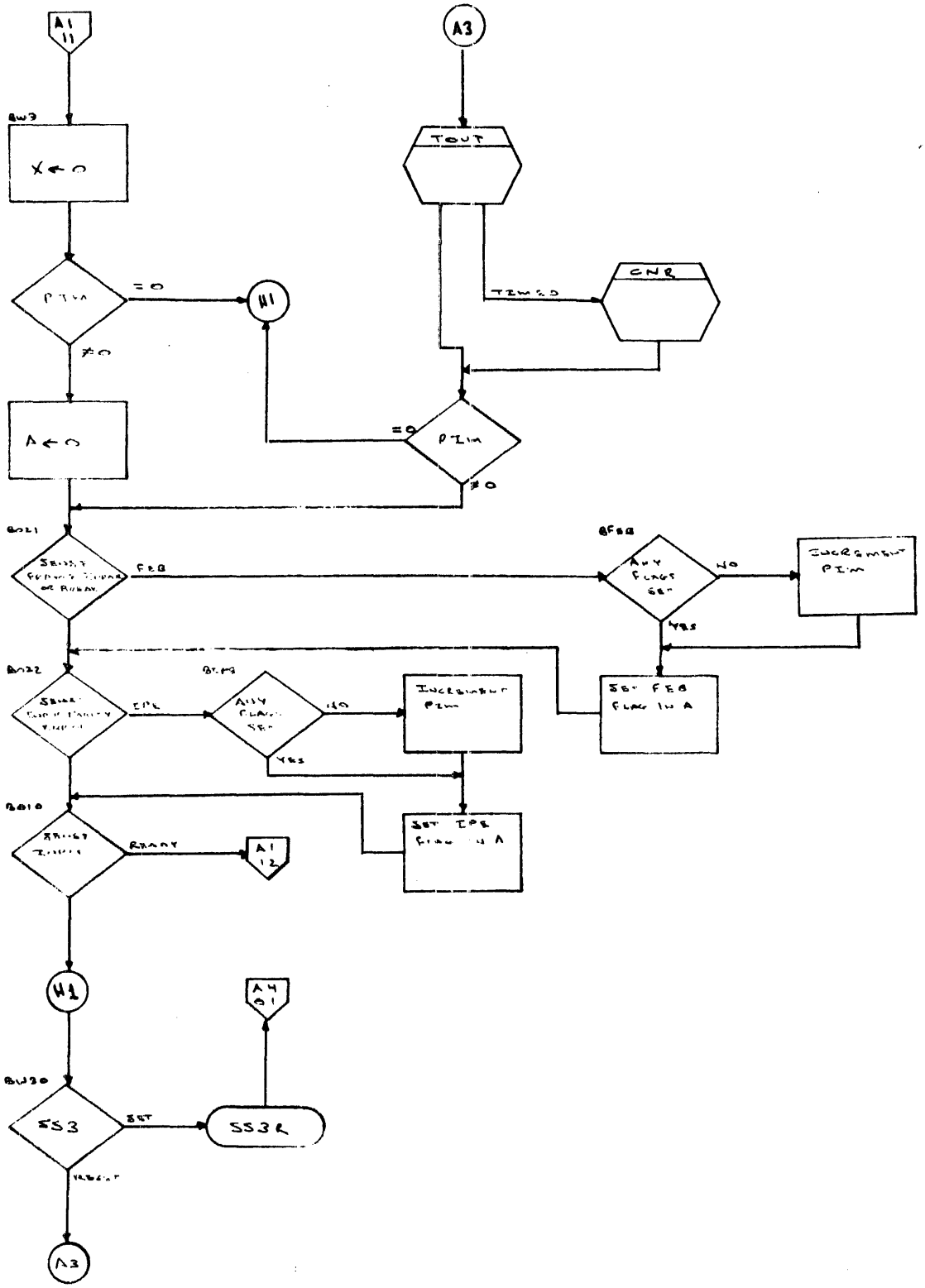

FOLD UNDER AT DOTTED LINE

FOLD UNDER AT DOTTED LINE

PROGRAMMER	PROGRAM NO.	DATE	PAGE 12
CHART I.D.	CHART NAME	PROGRAM NAME	

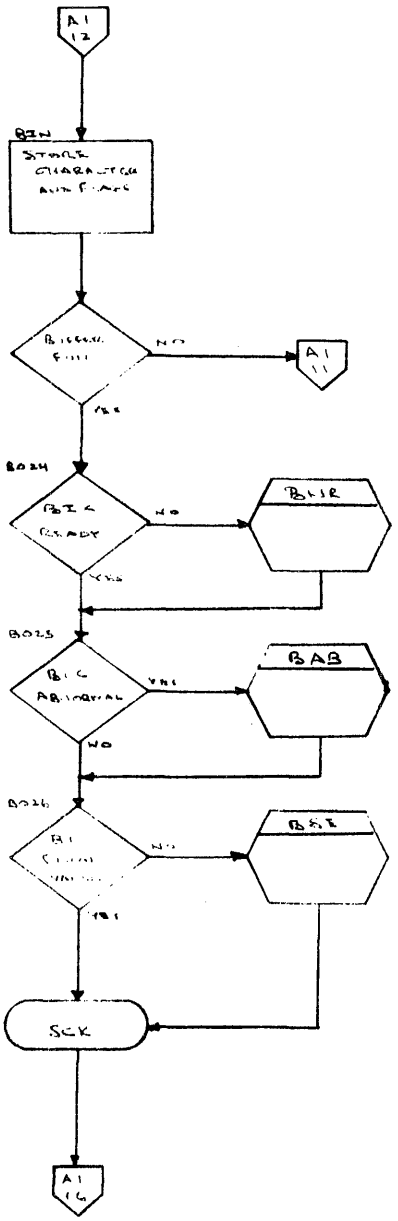

FOLD UNDER AT DOTTED LINE

FOLD UNDER AT DOTTED LINE

varian data machines a varian subsidiary	CODE IDENT. NO.	8940226	REV. A
	PREPARED BY	APPROVED BY	SHEET 47 OF 70

98A0349-000A

PROGRAMMER	PROGRAM NO.	DATE	PAGE 1-.
CHART I.D.	CHART NAME	PROGRAM NAME	

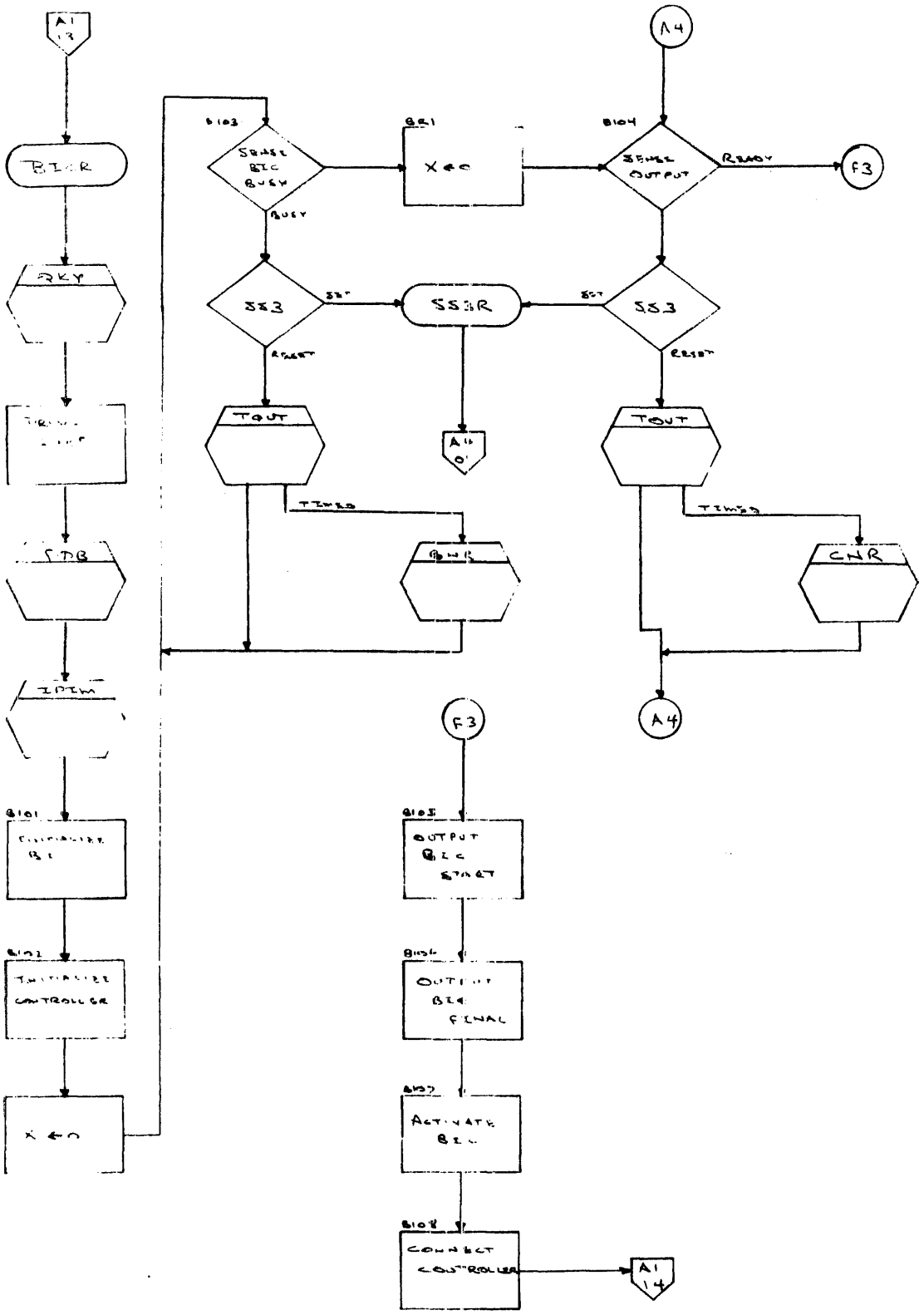

FOLD UNDER AT DOTTED LINE

FOLD UNDER AT DOTTED LINE

varian data machines a varian subsidiary	CODE IDENT. NO.	89A0228	REV. A
	PREPARED BY	APPROVED BY	SHEET 48 OF 70

PROGRAMMER	PROGRAM NO.	DATE	PAGE 14
CHART I.D.	CHART NAME	PROGRAM NAME	

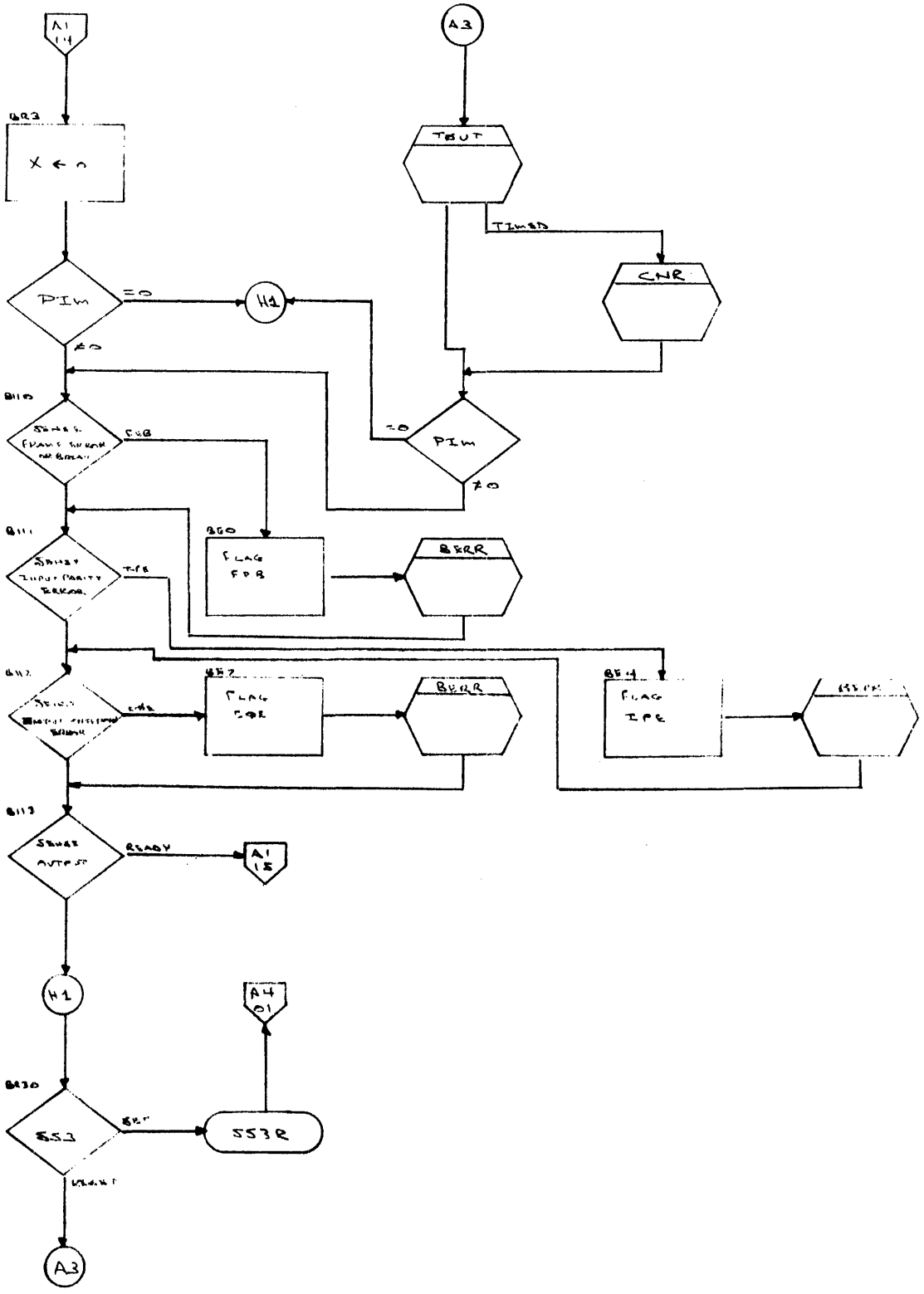

FOLD UNDER AT DOTTED LINE

FOLD UNDER AT DOTTED LINE

varian data machines a varian subsidiary	CODE IDENT. NO.		89A0228	REV. A
	PREPARED BY	APPROVED BY	SHEET 49 OF 70	

90A0340-000A

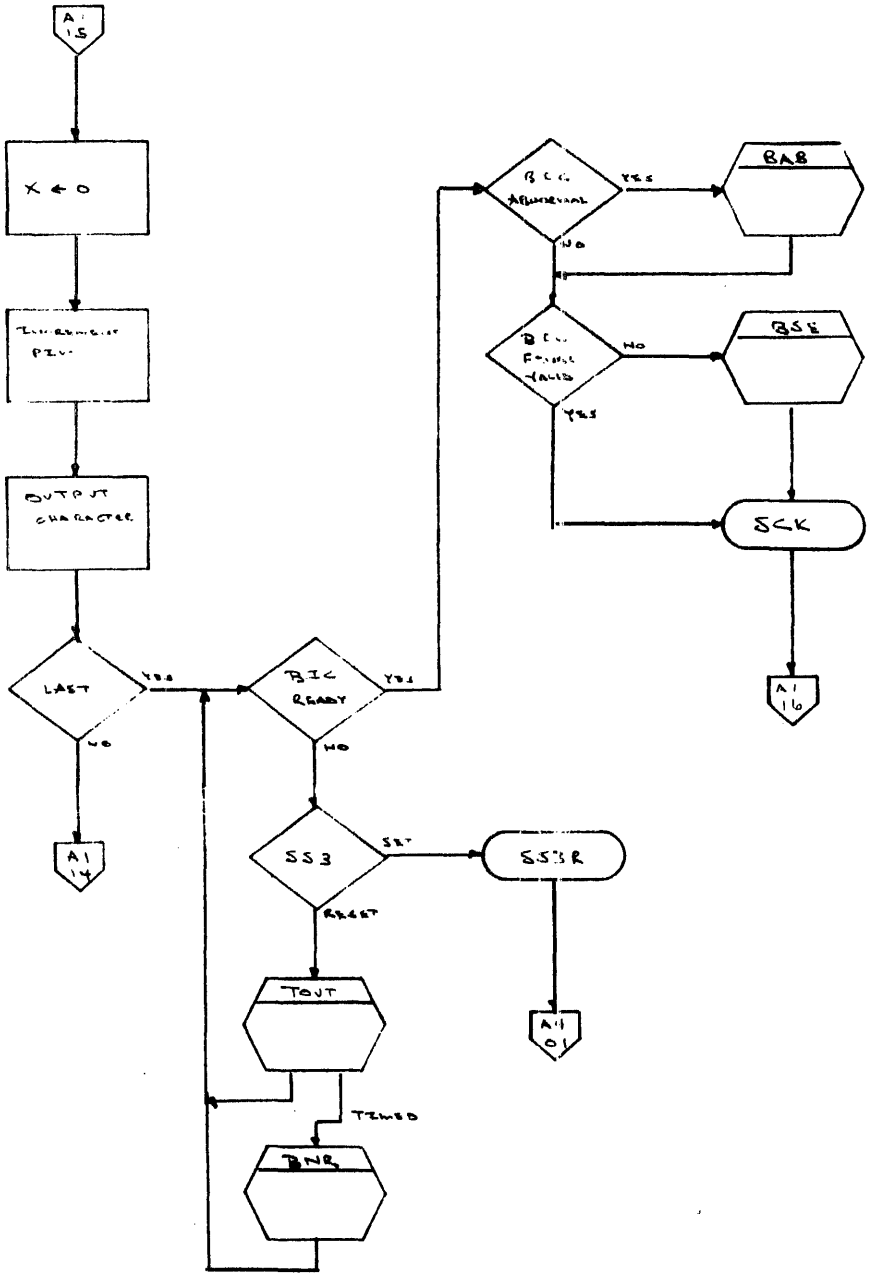

FOLD UNDER AT DOTTED LINE

FOLD UNDER AT DOTTED LINE

PROGRAMMER	PROGRAM NO.	DATE	PAGE 16
CHART I.D.	CHART NAME	PROGRAM NAME	

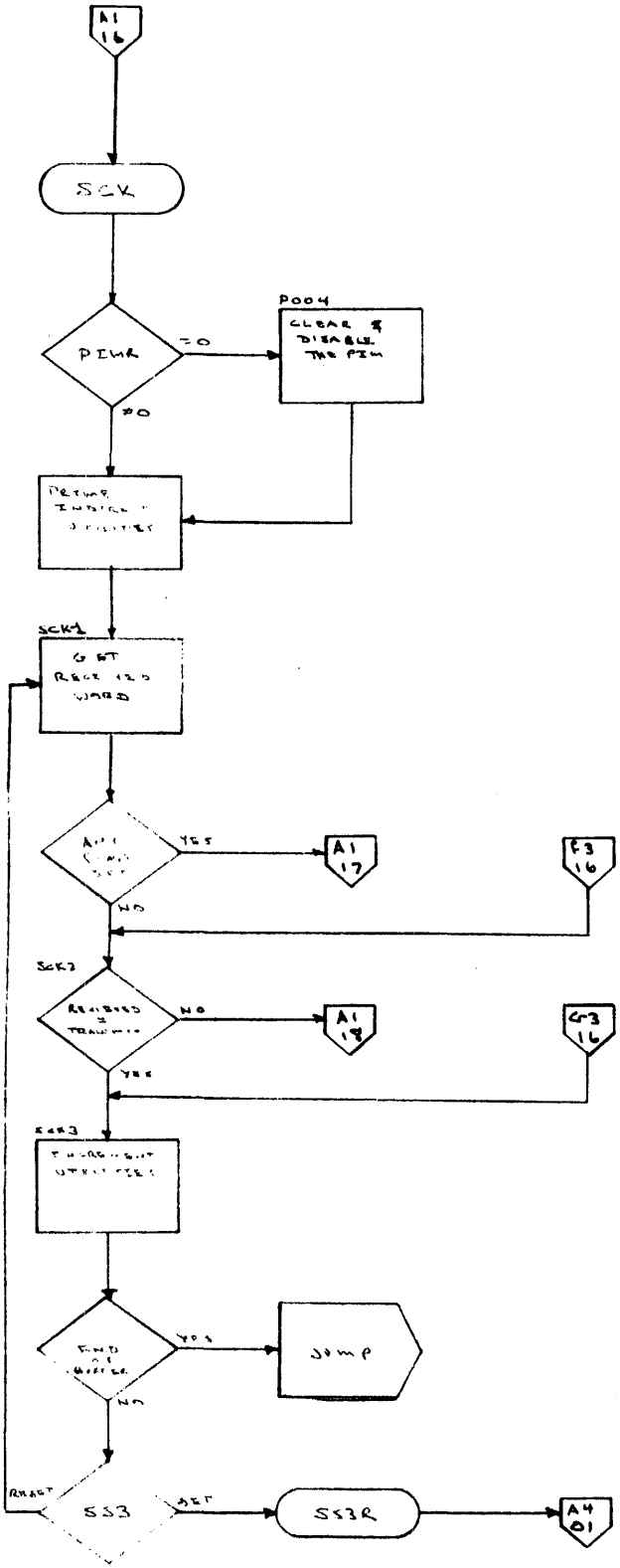

FOLD UNDER AT DOTTED LINE

FOLD UNDER AT DOTTED LINE

varian data machines a varian subsidiary	CODE IDENT. NO.	89A0228	REV. A
	PREPARED BY	APPROVED BY	SHEET 51 OF 70

PROGRAMMER	PROGRAM NO.	DATE	PAGE 17
CHART I.D.	CHART NAME	PROGRAM NAME	

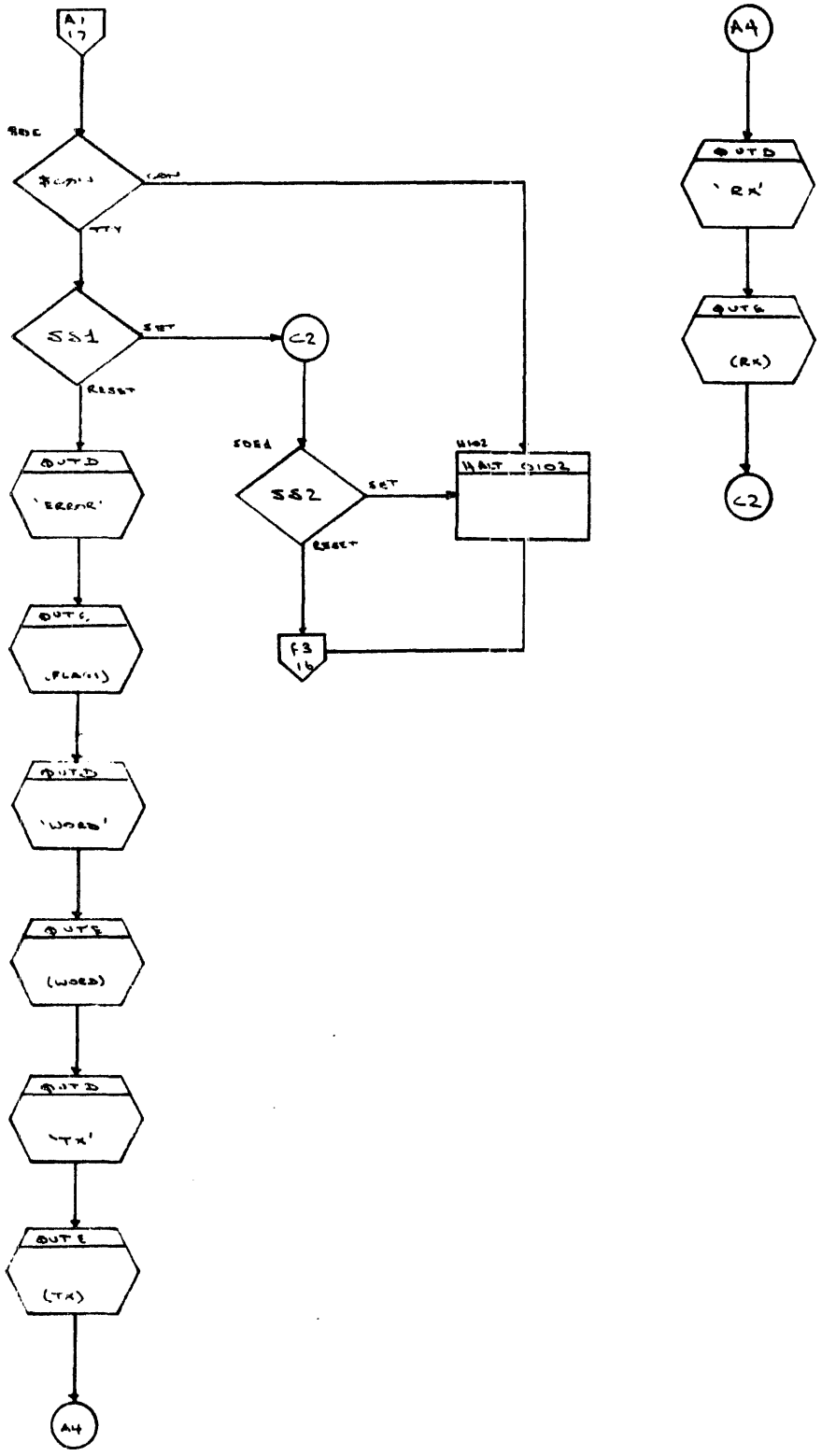

FOLD UNDER AT DOTTED LINE

FOLD UNDER AT DOTTED LINE

varian data machines a varian subsidiary	CODE IDENT. NO.	89A0228	REV. A
	PREPARED BY	APPROVED BY	SHEET 52 OF 70

PROGRAMMER	PROGRAM NO.	DATE	PAGE 18
CHART I.D.	CHART NAME	PROGRAM NAME	

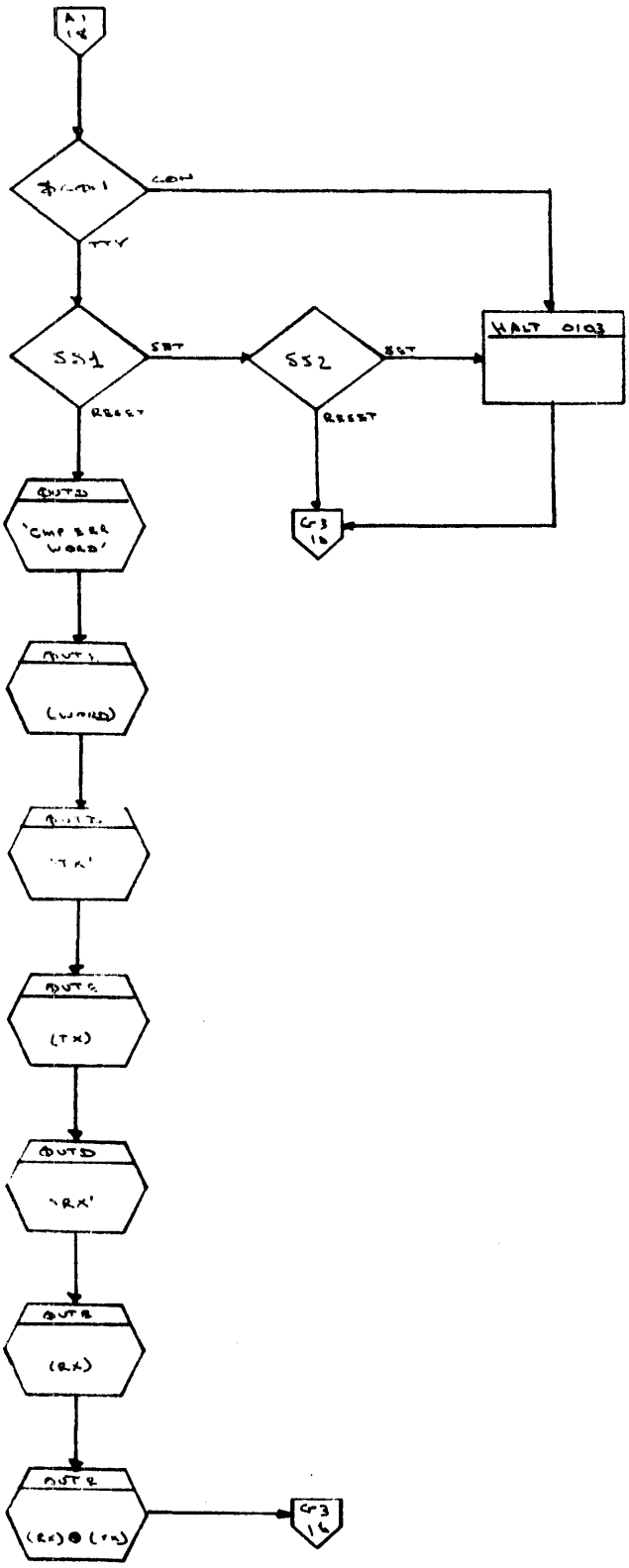

FOLD UNDER AT DOTTED LINE

FOLD UNDER AT DOTTED LINE

varian data machines a varian subsidiary	CODE IDENT. NO.		89A0228	REV. A
	PREPARED BY	APPROVED BY	SHEET 53 OF 710	

PROGRAMMER	PROGRAM NO.	DATE	PAGE 19
CHART I.D.	CHART NAME	PROGRAM NAME	

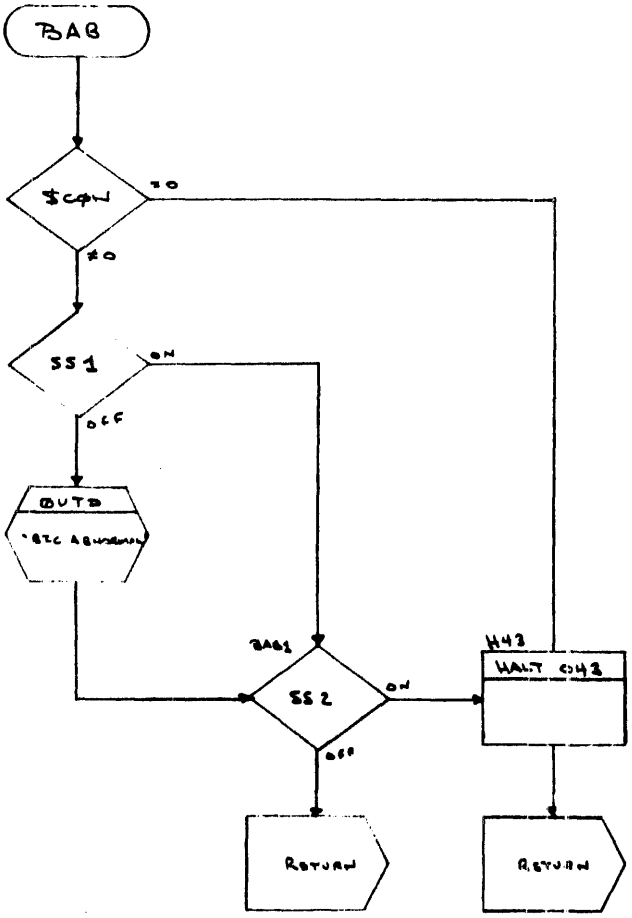

FOLD UNDER AT DOTTED LINE

FOLD UNDER AT DOTTED LINE

varian data machines a varian subsidiary	CODE IDENT. NO.	89A0228	REV. H
	PREPARED BY	APPROVED BY	SHEET 54 OF 70

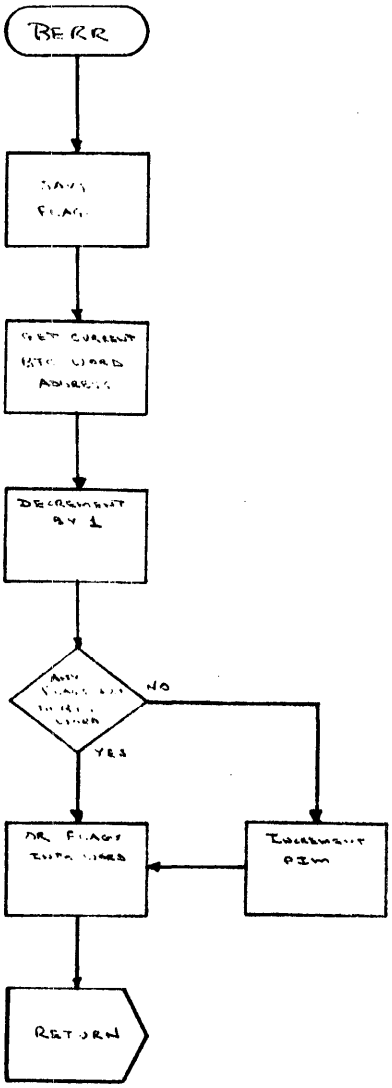

FOLD UNDER AT DOTTED LINE

FOLD UNDER AT DOTTED LINE

PROGRAMMER	PROGRAM NO.	DATE	PAGE 21
CHART I.D.	CHART NAME	PROGRAM NAME	

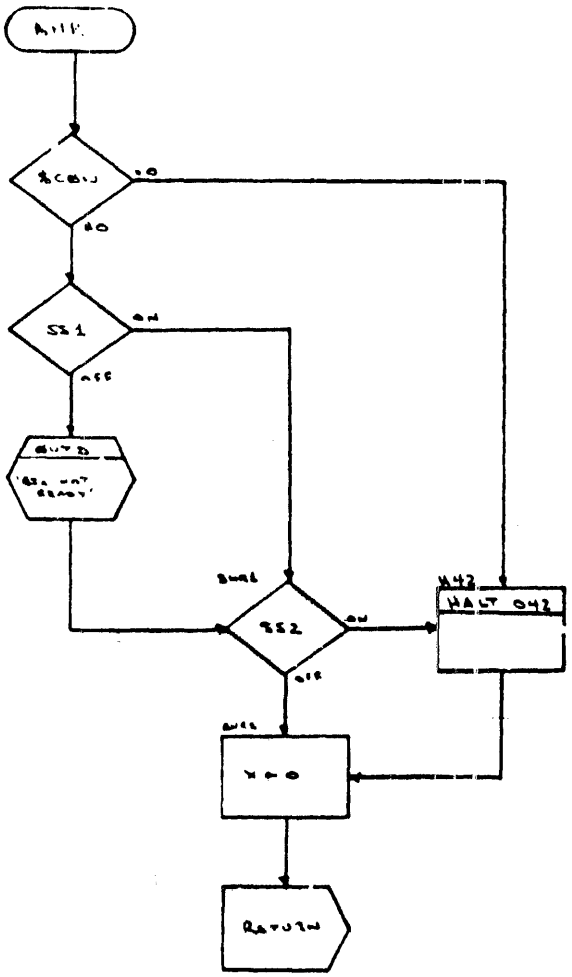

varian data machines a varian subsidiary	CODE IDENT. NO.	89A0228	REV. A
	PREPARED BY	APPROVED BY	SHEET 56 OF 70

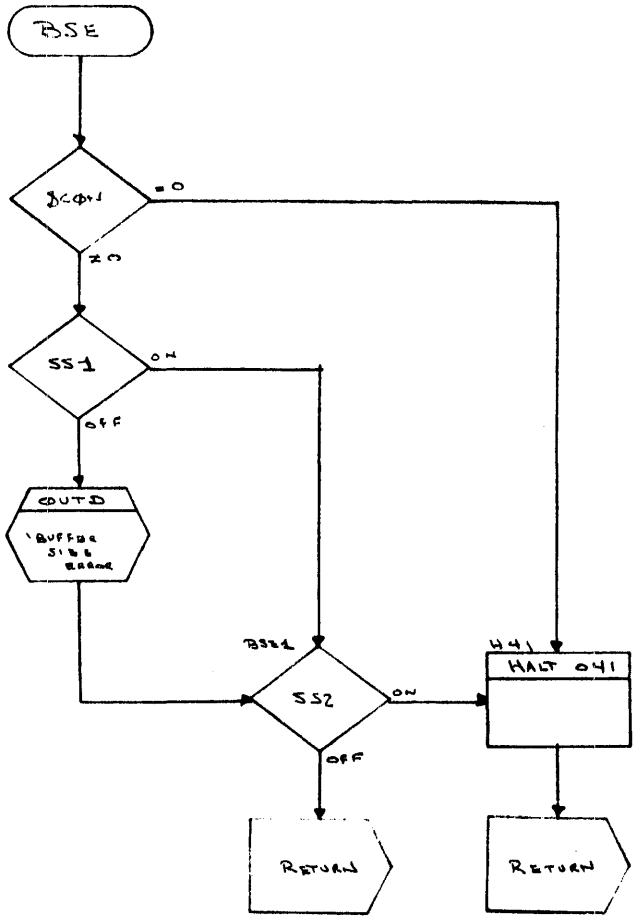

FOLD UNDER AT DOTTED LINE

FOLD UNDER AT DOTTED LINE

PROGRAMMER	PROGRAM NO.	DATE	PAGE 23
CHART I. D.	CHART NAME	PROGRAM NAME	

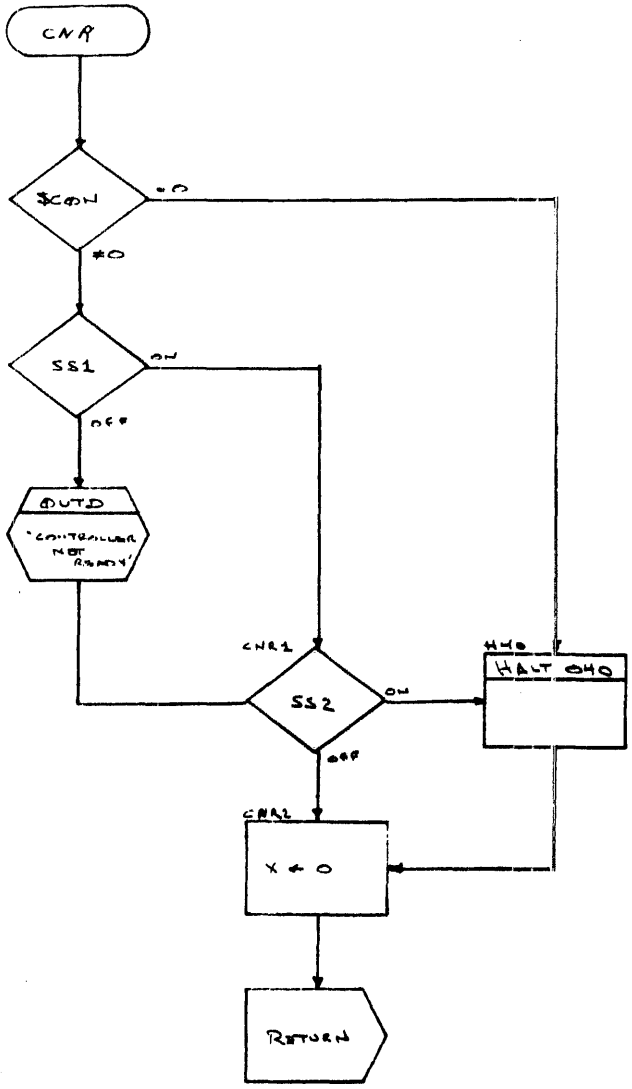

FOLD UNDER AT DOTTED LINE

FOLD UNDER AT DOTTED LINE

varian data machines a varian subsidiary	CODE IDENT. NO.	89A0228	REV. A
	PREPARED BY	APPROVED BY	SHEET 58 OF 70

PROGRAMMER	PROGRAM NO.	DATE	PAGE 24
CHART I.D.	CHART NAME	PROGRAM NAME	

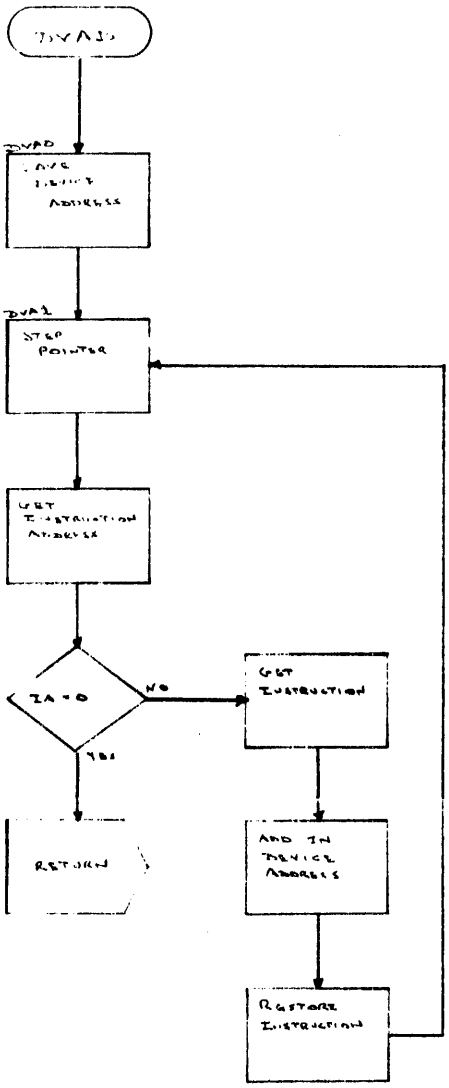

FOLD UNDER AT DOTTED LINE

FOLD UNDER AT DOTTED LINE

varian data machines a varian subsidiary	CODE IDENT. NO.	89A0228	REV. A
	PREPARED BY	APPROVED BY	SHEET 54 OF 70

PROGRAMMER	PROGRAM NO.	DATE	PAGE 25
CHART I. D.	CHART NAME	PROGRAM NAME	

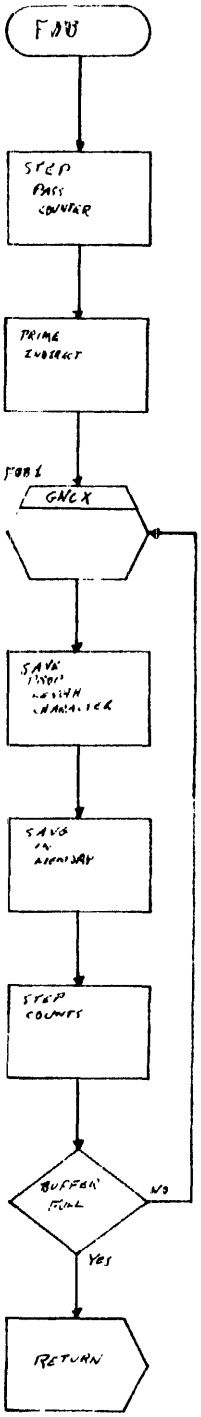

FOLD UNDER AT DOTTED LINE

FOLD UNDER AT DOTTED LINE

varian data machines a varian subsidiary	CODE IDENT. NO.	89A0228	REV. A
	PREPARED BY	APPROVED BY	SHEET 60 OF 70

PROGRAMMER	PROGRAM NO.	DATE	PAGE 26
CHART I.D.	CHART NAME	PROGRAM NAME	

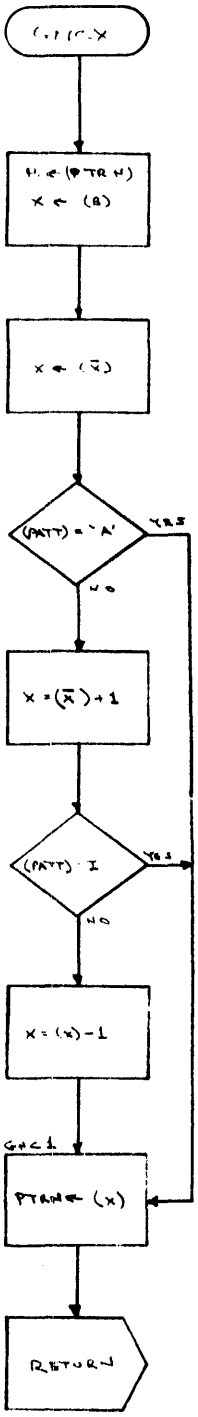

FOLD UNDER AT DOTTED LINE

FOLD UNDER AT DOTTED LINE

varian data machines a varian subsidiary	CODE IDENT. NO.		89A0228	REV. A
	PREPARED BY	APPROVED BY	SHEET 61 OF 70	

PROGRAMMER	PROGRAM NO.	DATE	PAGE 27
CHART I.D.	CHART NAME	PROGRAM NAME	

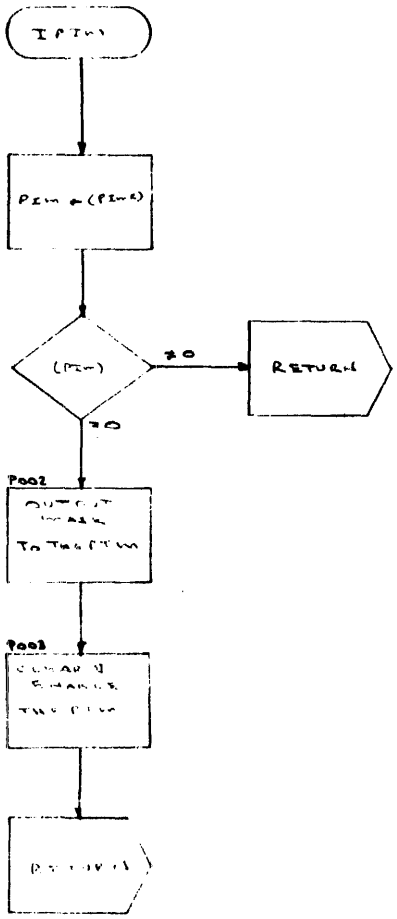

FOLD UNDER AT DOTTED LINE

FOLD UNDER AT DOTTED LINE

varian data machines a varian subsidiary	CODE IDENT. NO.	89A0268	REV. A
	PREPARED BY	APPROVED BY	SHEET 62 OF 70

96A0349-000A

PROGRAMMER	PROGRAM NO.	DATE	PAGE 28
CHART I.D.	CHART NAME	PROGRAM NAME	

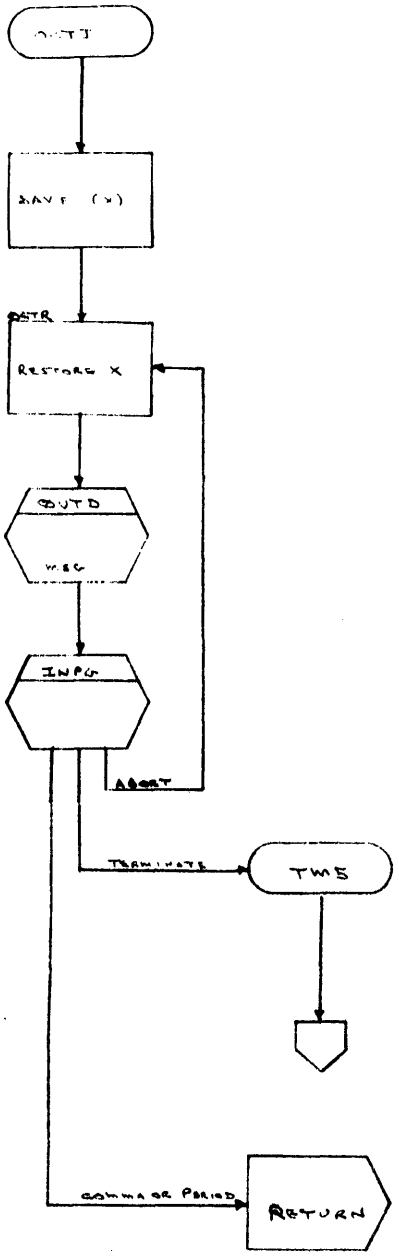

FOLD UNDER AT DOTTED LINE

FOLD UNDER AT DOTTED LINE

PROGRAMMER	PROGRAM NO.	DATE	PAGE 29
CHART I.D.	CHART NAME	PROGRAM NAME	

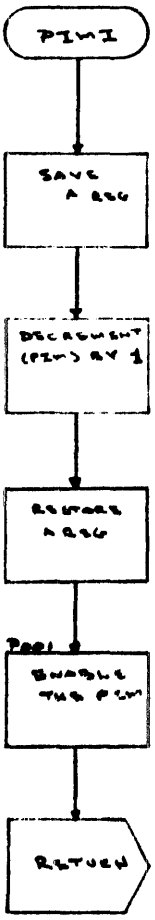

FOLD UNDER AT DOTTED LINE

FOLD UNDER AT DOTTED LINE

varian data machines a varian subsidiary	CODE IDENT. NO.	89A0228	REV. A
	PREPARED BY	APPROVED BY	SHEET 64 OF 70

PROGRAMMER	PROGRAM NO.	DATE	PAGE 30
CHART I.D.	CHART NAME	PROGRAM NAME	

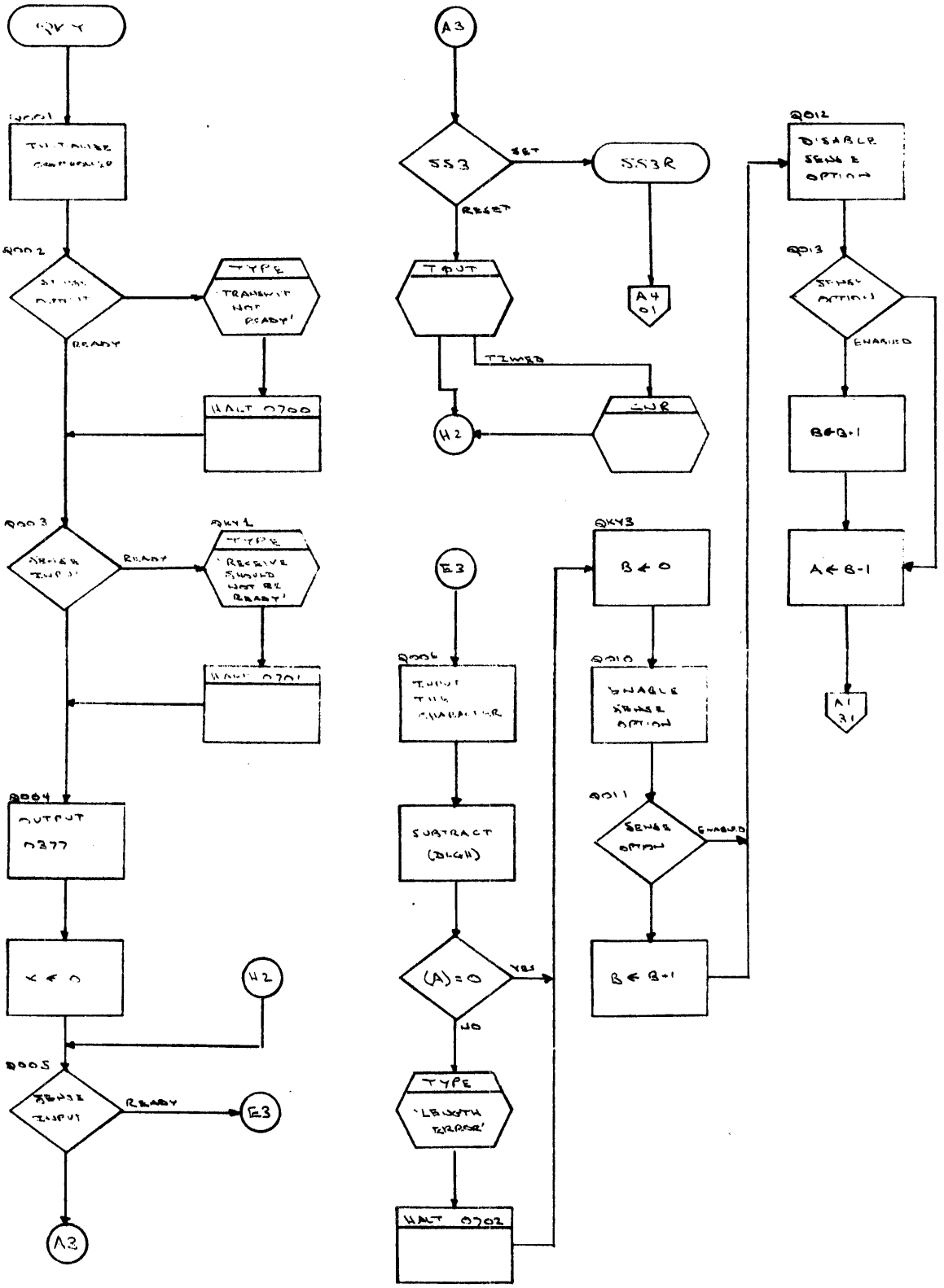

FOLD UNDER AT DOTTED LINE

FOLD UNDER AT DOTTED LINE

varian data machines a varian subsidiary	CODE IDENT. NO.	89A0228	REV. A
	PREPARED BY	APPROVED BY	SHEET 65 OF 70

98A0340-000A

PROGRAMMER	PROGRAM NO.	DATE	PAGE 31
CHART I.D.	CHART NAME	PROGRAM NAME	

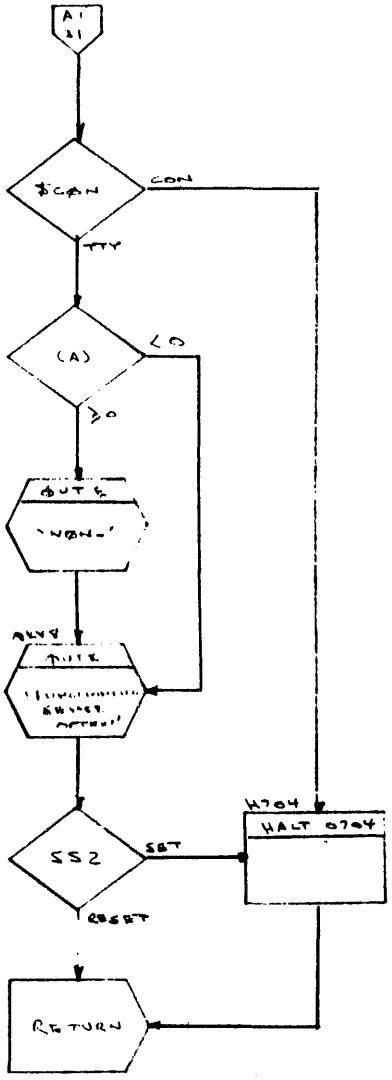

FOLD UNDER AT DOTTED LINE

FOLD UNDER AT DOTTED LINE

varian data machines, a varian subsidiary	CODE IDENT. NO.	89A0228	REV. A
	PREPARED BY	APPROVED BY	SHEET 66 OF 70

PROGRAMMER	PROGRAM NO.	DATE	PAGE 32
CHART I.D.	CHART NAME	PROGRAM NAME	

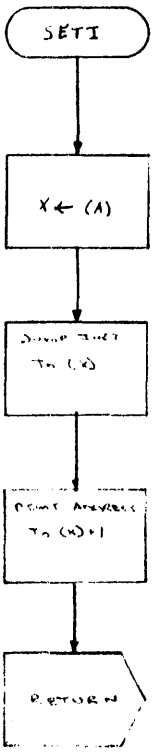

FOLD UNDER AT DOTTED LINE

FOLD UNDER AT DOTTED LINE

PROGRAMMER	PROGRAM NO.	DATE	PAGE 33
CHART I.D.	CHART NAME	PROGRAM NAME	

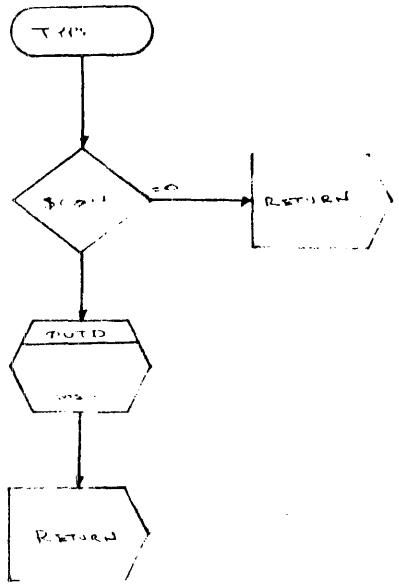

FOLD UNDER AT DOTTED LINE

FOLD UNDER AT DOTTED LINE

varian data machines
a varian subsidiary

CODE IDENT. NO.		89A0228	REV. A
PREPARED BY	APPROVED BY	SHEET 68 OF 110	

SECTION 4
TEST SPECIFICATIONS

4.1 OBJECTIVES

The purpose of this section is to describe to what extent the program has been validated in terms of variations in applicable hardware, configurations and other external input parameters. Using the teletype mode of operation, actual hardcopy of each test variance is presented. This will provide an aid in evaluating future claimed discrepancies observed in the program.

4.2 CONFIGURATIONS

This program has been exercised on the following hardware configuration:

1) 620/i - 4K memory

4.3 DETAILED DESCRIPTIONS

The following hard copy printout is provided to validate the responses received for each respective input:

```
        UNIVERSAL ASYNCHRONOUS SERIAL CONTROLLER TEST

        UASC DA          2.
        DATA LENGTH      8
        PATTERN          F377.
        PIM REQUIRED     N
        MODE             SE
        FUNCTIONING SENSE OPTION

        000025 PASSES
        PATTERN          A252.
        PIM REQUIRED     Y
        PIM DA           40.
        TX INT LOC       100.

        RX INT LOC       102.
        ER INT LOC       104.
        MASK             370.
        MODE             SE
        FUNCTIONING SENSE OPTION
```

```
000013 PASSES
PATTERN          IO.
PIM REQUIRED     Y
MODE             BI
BIC DA           20.
BIC DIRECTION    T
FUNCTIONING SENSE OPTION

000027 PASSES
PATTERN          C
000016 PASSES
PATTERN          FO.
PIM REQUIRED     N
MODE             BI
BIC DIRECTION    R
FUNCTIONING SENSE OPTION

000022 PASSES

PATTERN

UASC DA
```