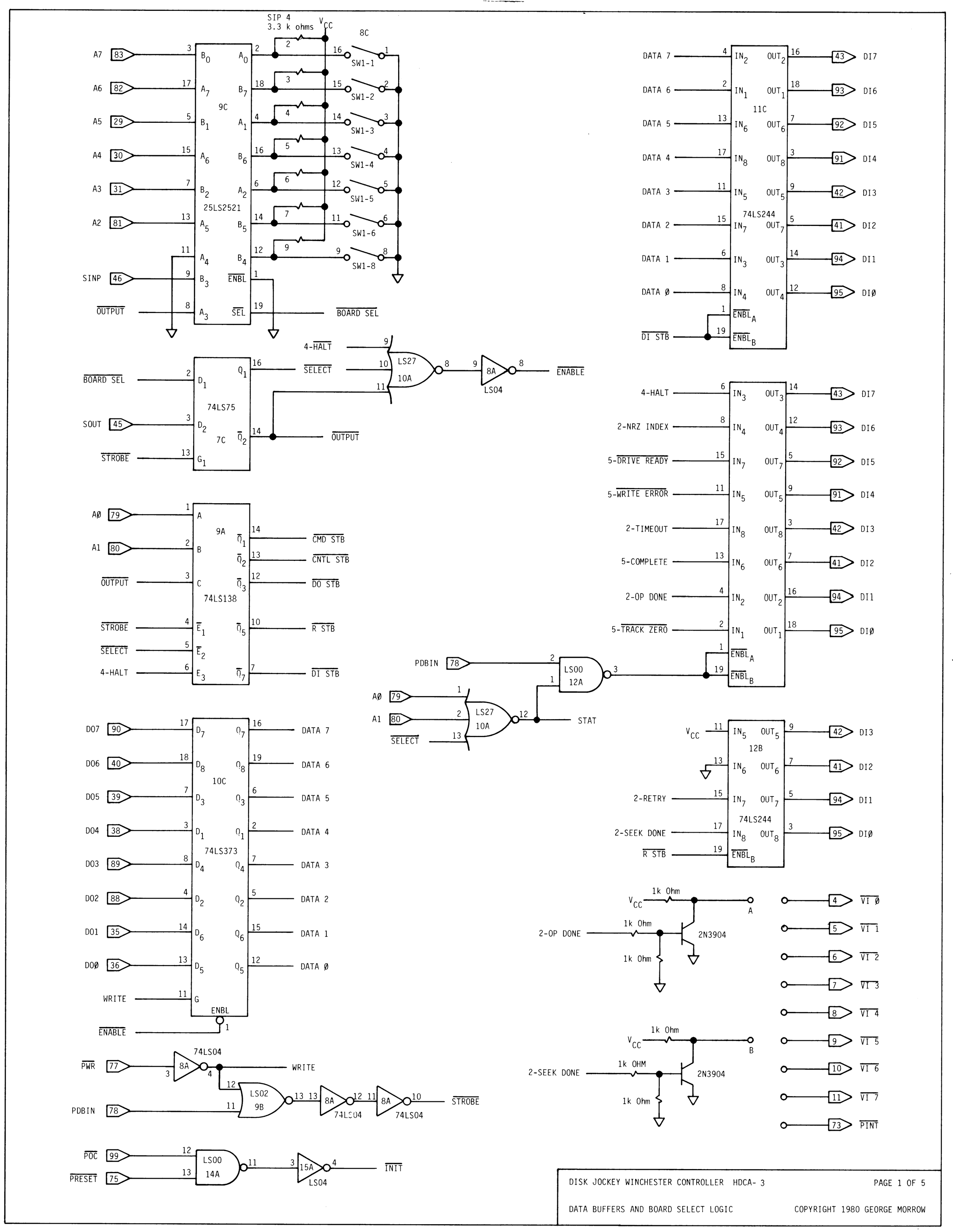

DISK JOCKEY WINCHESTER CONTROLLER HDCA- 3

PAGE 1 OF 5

DATA BUFFERS AND BOARD SELECT LOGIC

COPYRIGHT 1980 GEORGE MORROW

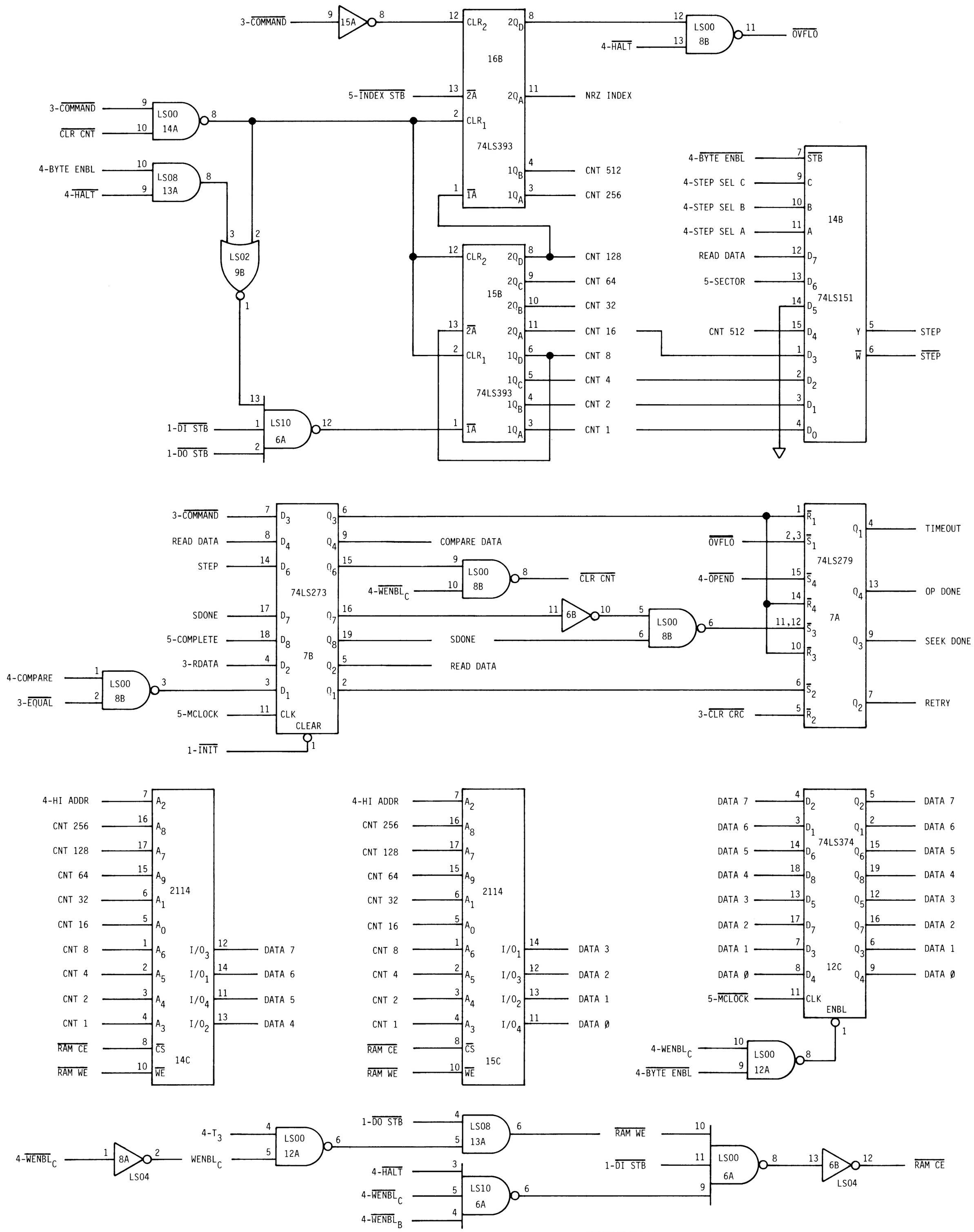

DISK JOCKEY WINCHESTER CONTROLLER HDCA-2 PAGE 2 OF 5

RAM BUFFER, STEP & COMPLETION LOGIC

COPYRIGHT 1980 GEORGE MORROW

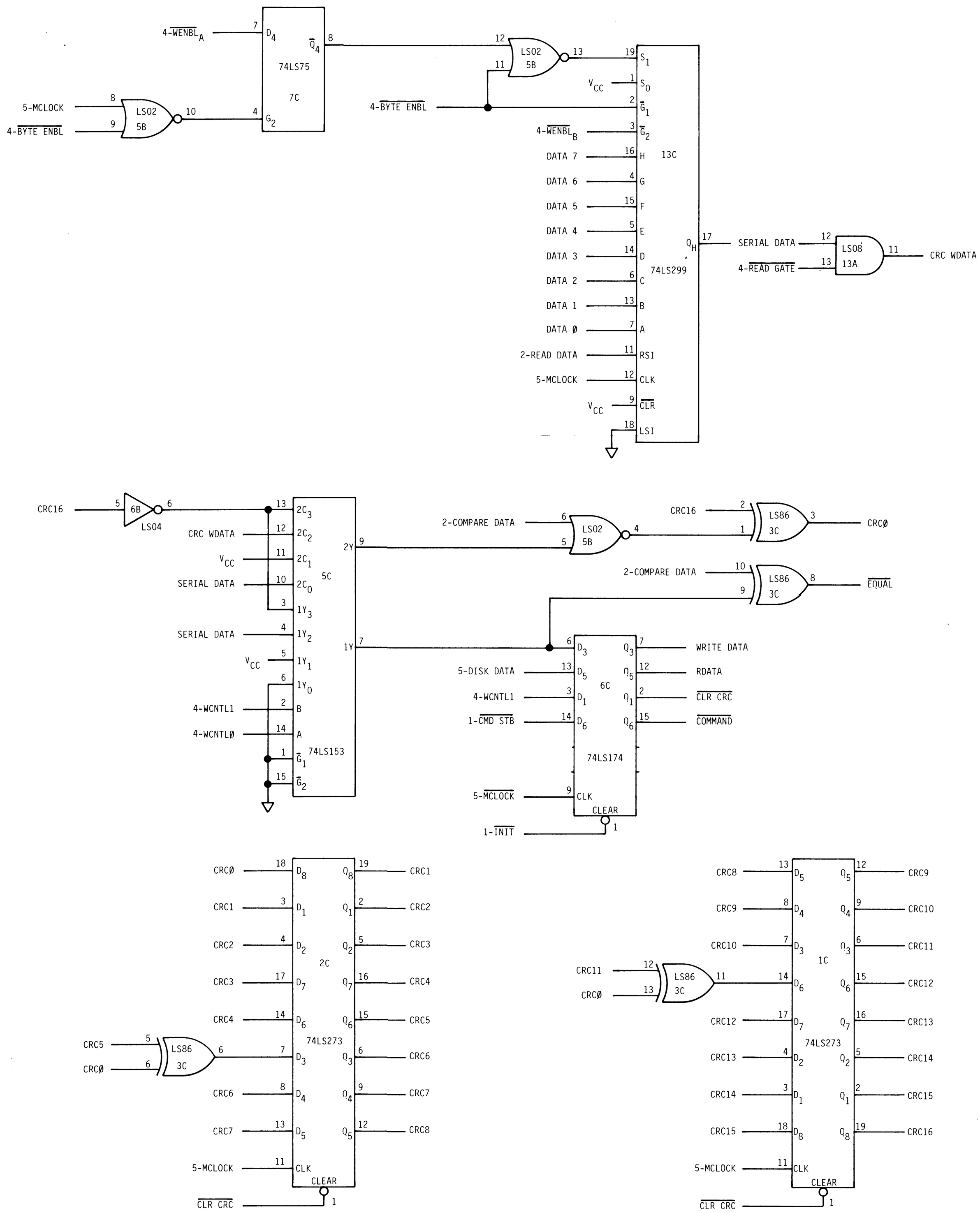

DISK JOCKEY WINCHESTER CONTROLLER HDCA-2 PAGE 3 OF 5

READ/WRITE LOGIC & CRC ERROR REGISTER

COPYRIGHT 1980 GEORGE MORROW

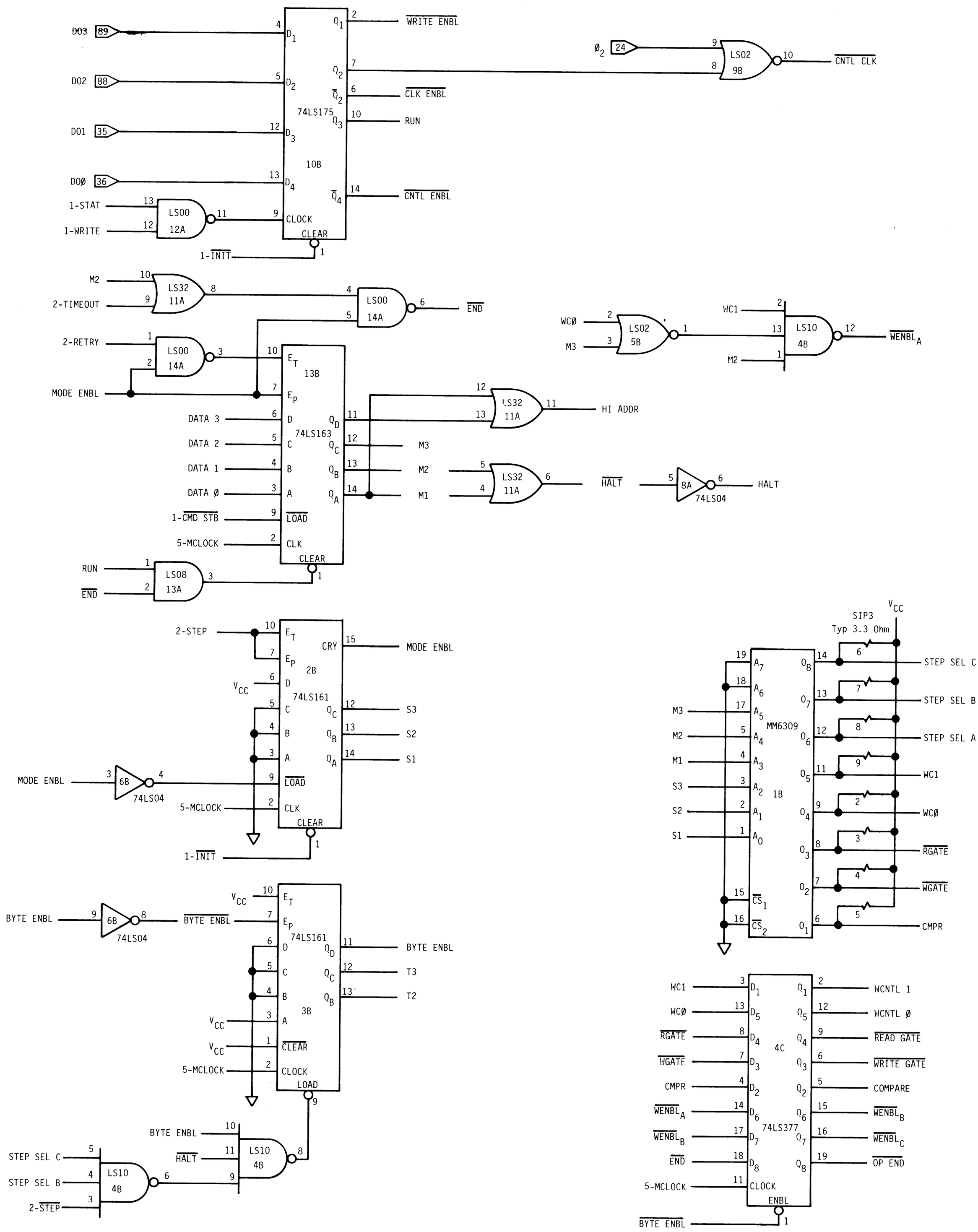

DISK JOCKEY WINCHESTER CONTROLLER HDCA-2

PAGE 4 OF 5

CONTROL SEQUENCE LOGIC

COPYRIGHT 1980 GEORGE MORROW

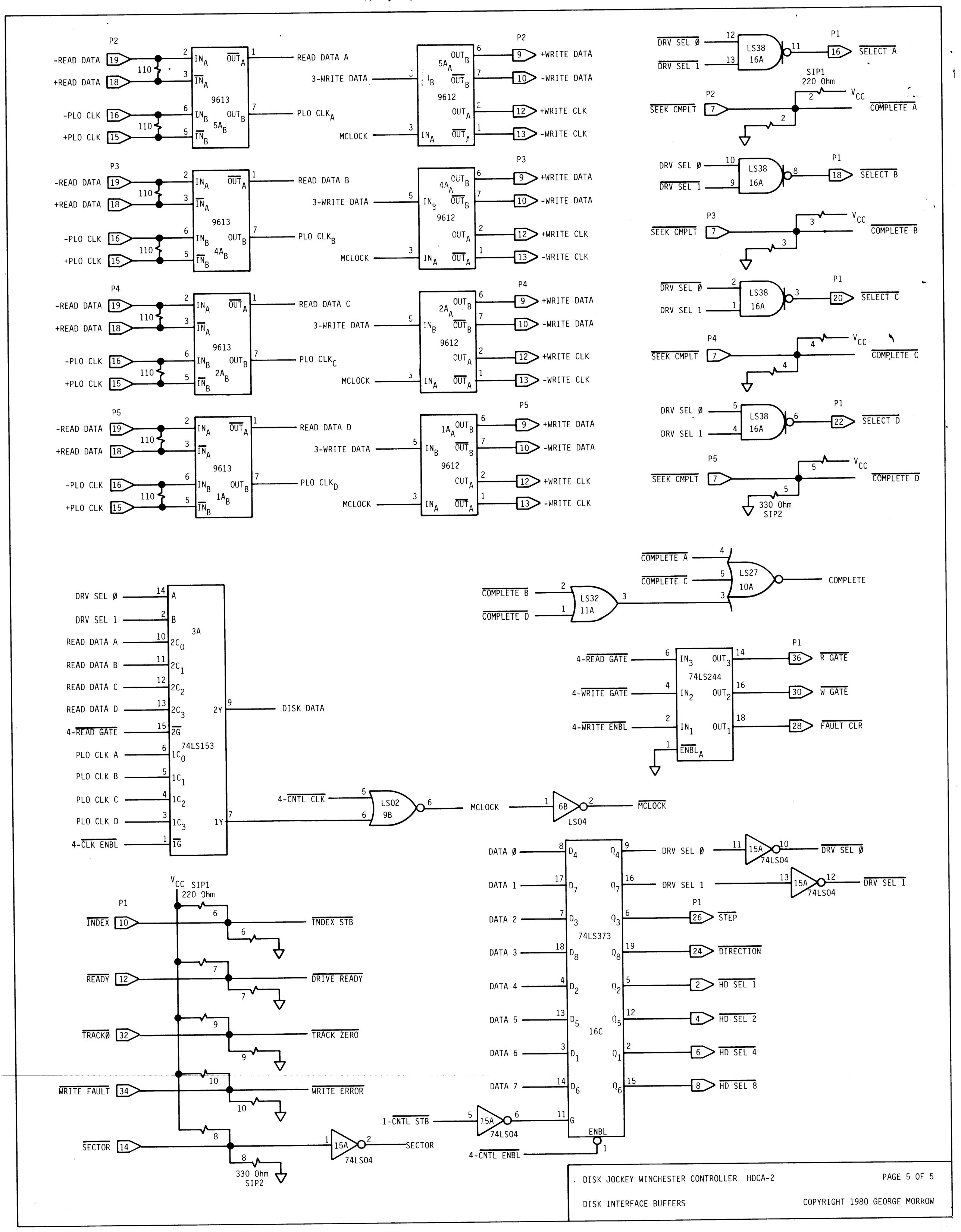

DISK JOCKEY WINCHESTER CONTROLLER HDCA-2

PAGE 5 OF 5

DISK INTERFACE BUFFERS

COPYRIGHT 1980 GEORGE MORROW