GA21-9290-2

File No. S5250/S34/S38-00

IBM 5256 Printer
Setup Procedure

USER'S SETUP INSTRUCTIONS

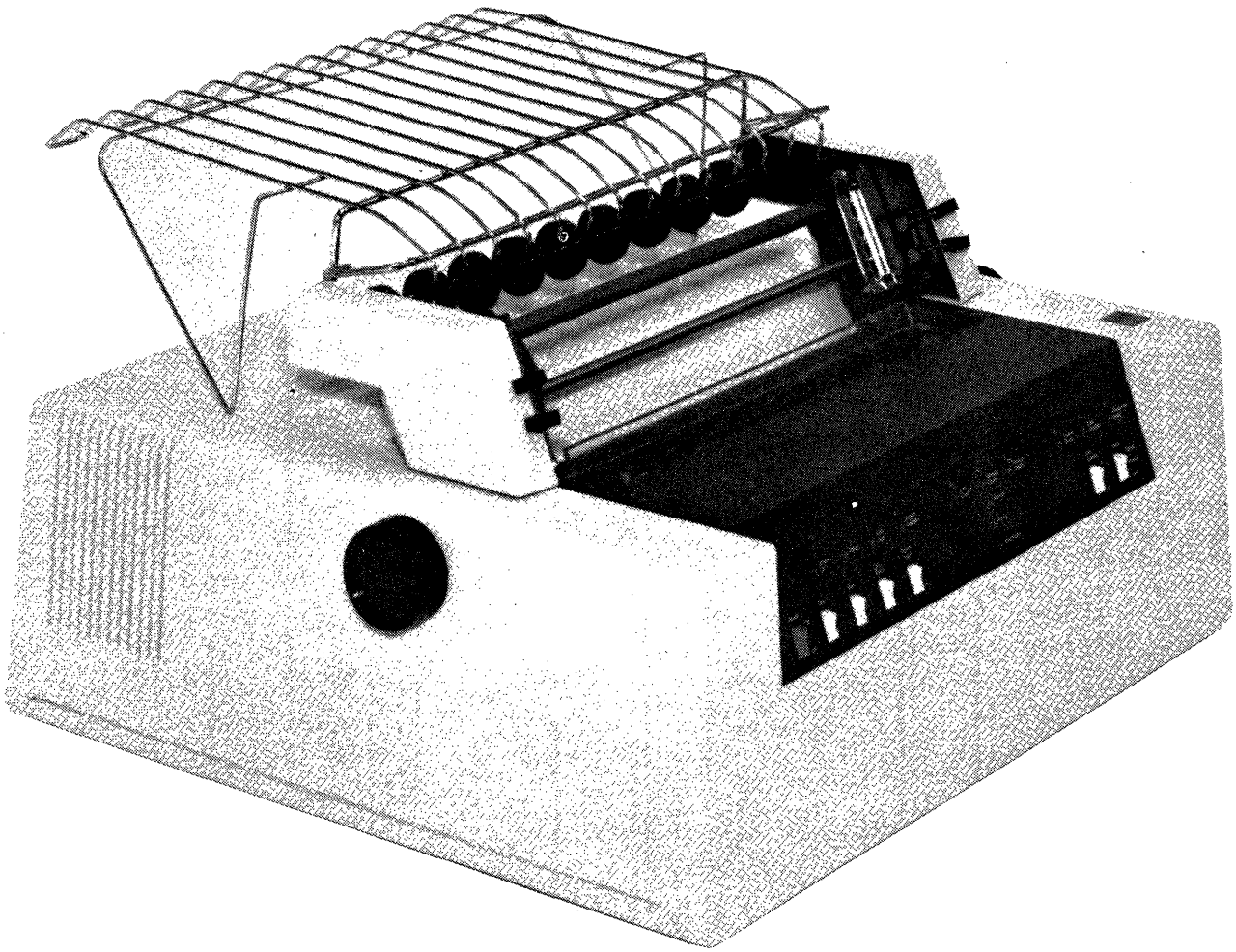

Third Edition (July 1979)

This is a major revision of, and obsoletes, GA21-9290-1. Because the changes and additions are extensive, this manual should be reviewed in its entirety. Changes are periodically made to the information herein; these changes will be reported in subsequent revisions.

Use this publication only for the purpose of setting up the IBM 5256 Printer.

Publications are not stocked at the address below. Requests for copies of IBM publications and for technical information about the system should be made to your IBM representative or to the branch office serving your locality.

This publication could contain technical inaccuracies or typographical errors. Use the Reader's Comment Form at the back of this publication to make comments about this publication. If the form has been removed, address your comments to IBM Corporation, Publications, Department 245, Rochester, Minnesota 55901. IBM may use and distribute any of the information you supply in any way it believes appropriate without incurring any obligation whatever. You may, of course, continue to use the information you supply.

Section 1. Setting Up the Printer

Safety Precaution: The 5256 Printer weighs approximately 36 kilograms (78 pounds). Never lift it by yourself.

This setup and checkout procedure should be used after your printer has been unpacked and placed where you intend to use it or whenever a printer has been disconnected and relocated. It is important to ensure that your printer is in its proper location.

Before you continue, look at the back of the printer.

If you do not have switches on the back of your printer, your printer must be the only machine on a line or the last machine on a line.

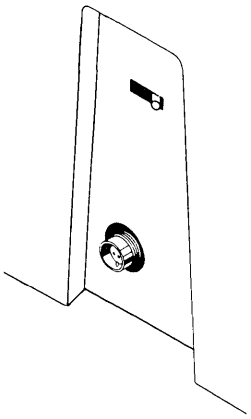

If you have Address switches, which are white, and a Terminator switch, which is blue, on the back of your printer, your printer can be placed anywhere on a line.

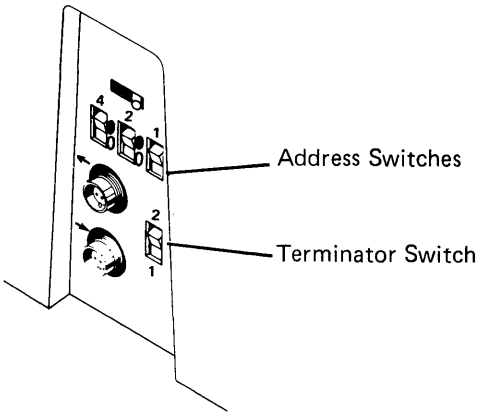

If in doubt, check with someone such as your supervisor, system operator, or manager.

Now do the following procedure to set up your printer and make it operative.

1. Tilt the printer up and remove the two red shipping bolts on the bottom of the printer.

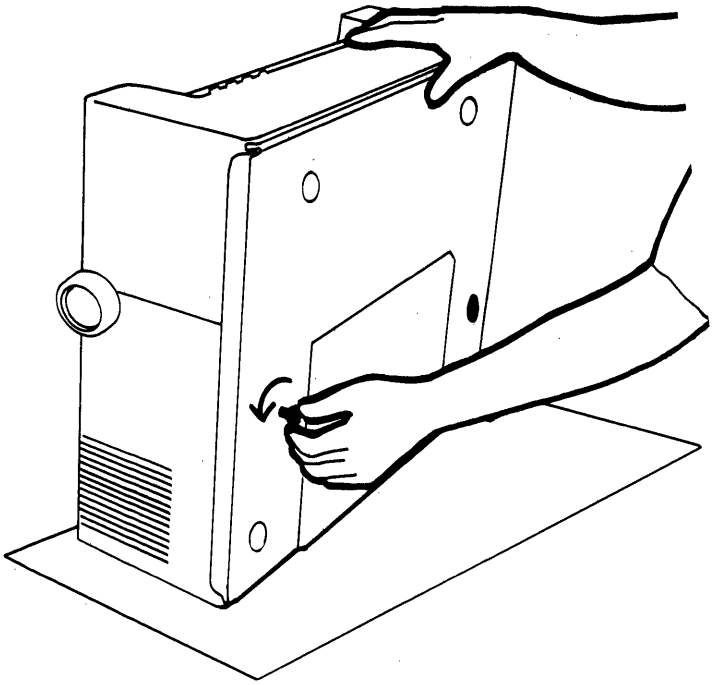

2. Remove the tape from the top of the printer covers.

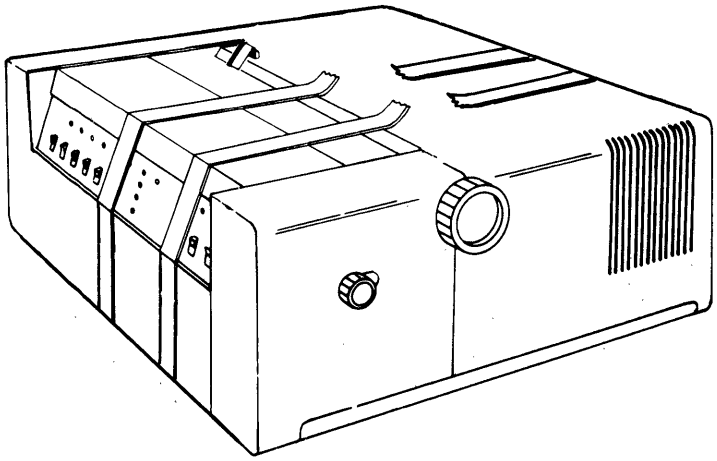

3. **Slide the top cover open.**

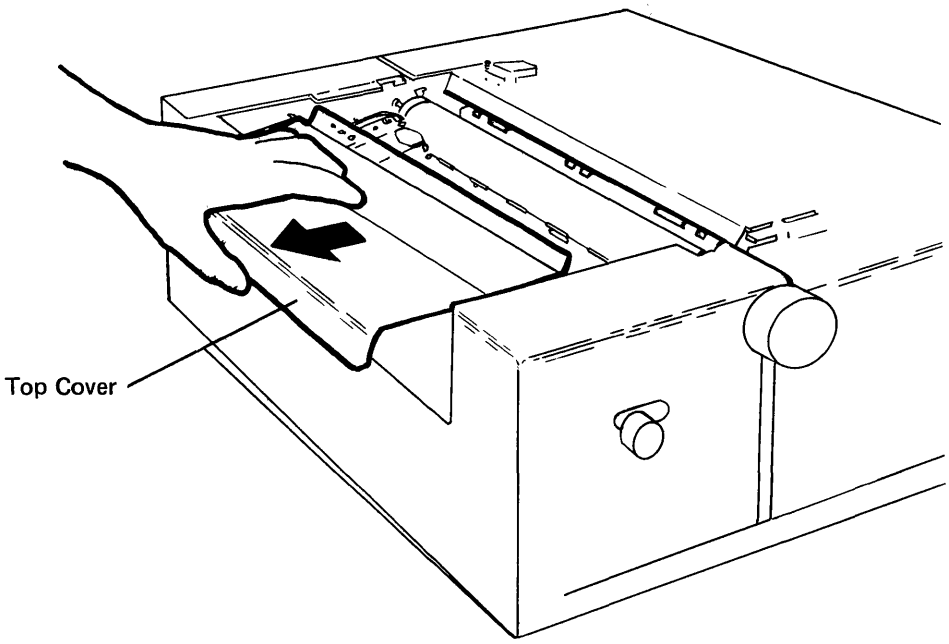

4. **Carefully remove the tape from the print head. Then gently push the print head to the left side of the printer.**

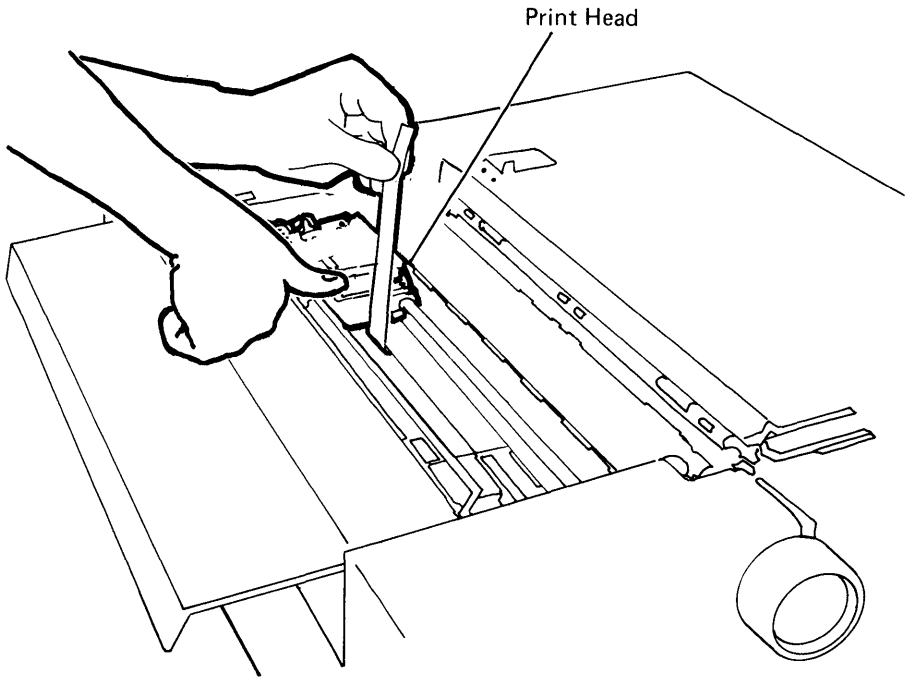

5. **Close the top cover.**

6. **Remove the power cord from the slot at the rear of the machine. Cut and remove the plastic string from the power cord. DO NOT plug in the power cord yet.**

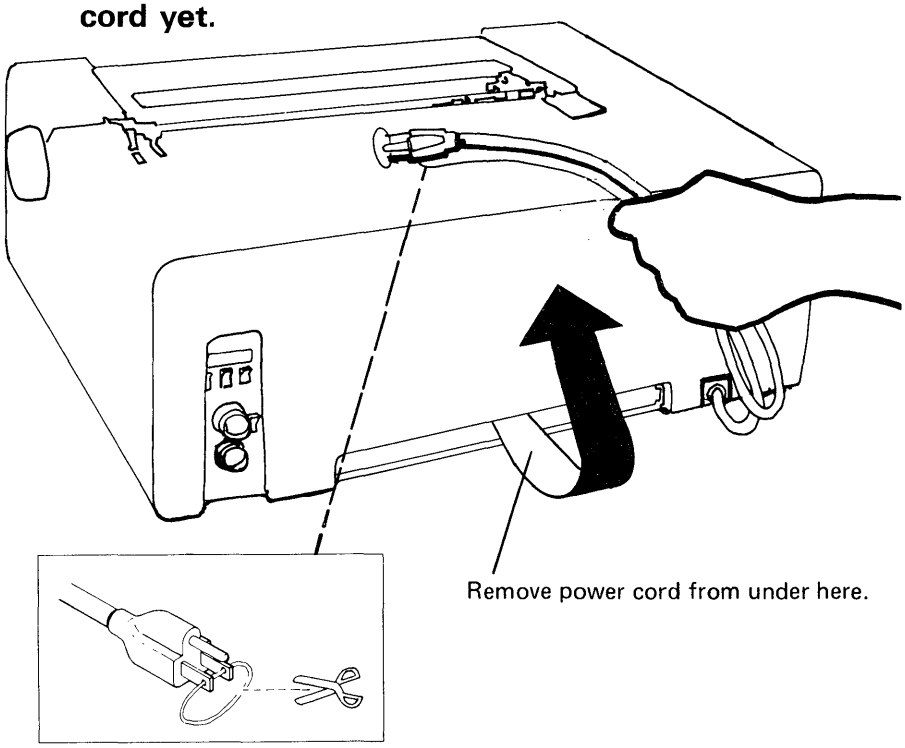

7. **Open the carton that came with the printer and remove the maintenance documentation from the carton.**

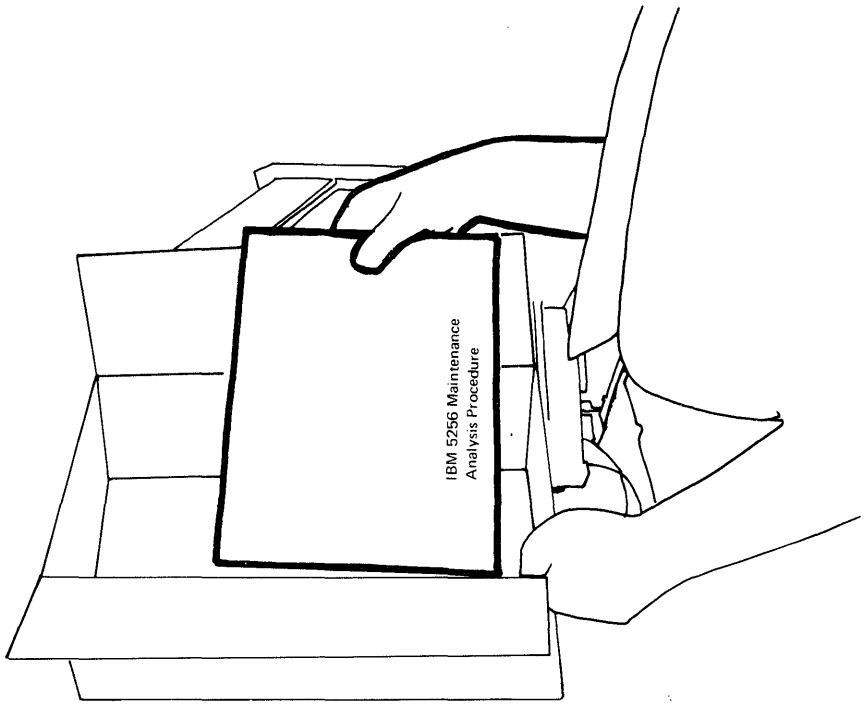

8. **Put the maintenance documentation in the slot at the rear of the machine.**

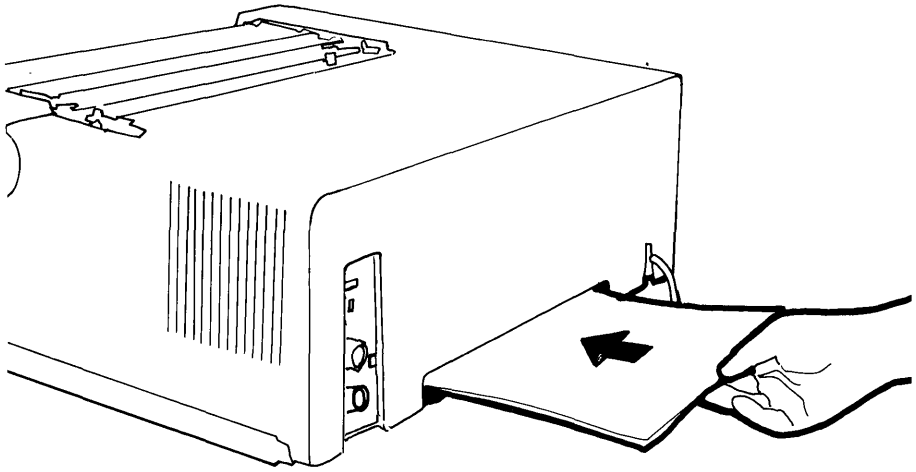

9. **Remove the packing material from around the forms tractor assembly; then remove the forms tractor assembly.**

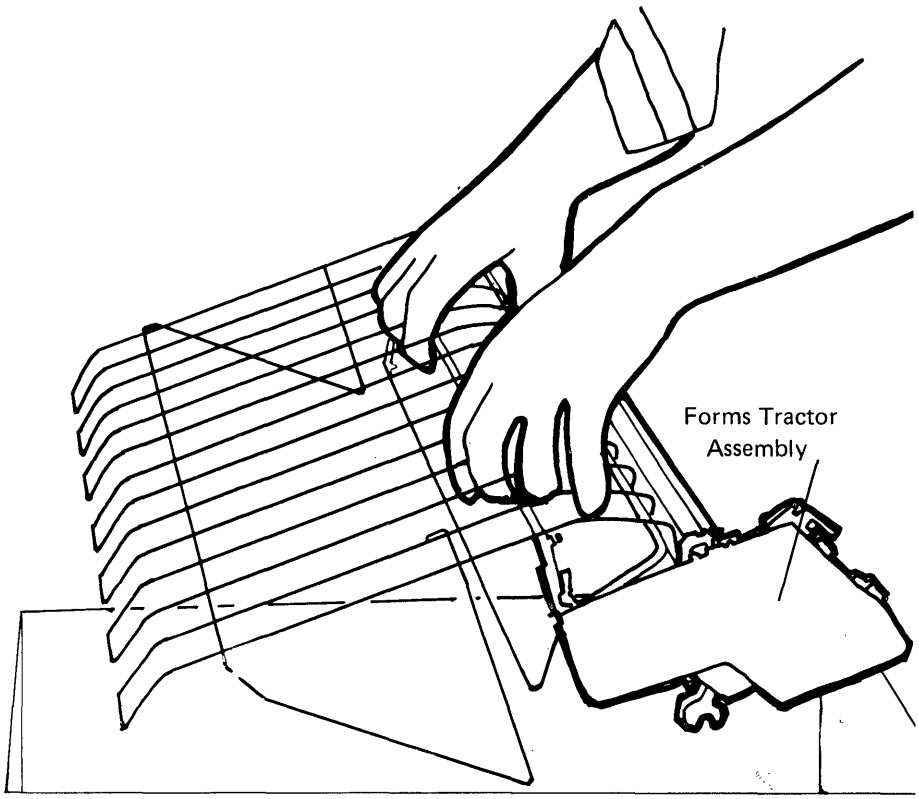

10. **Make sure the cut forms guide is back.**

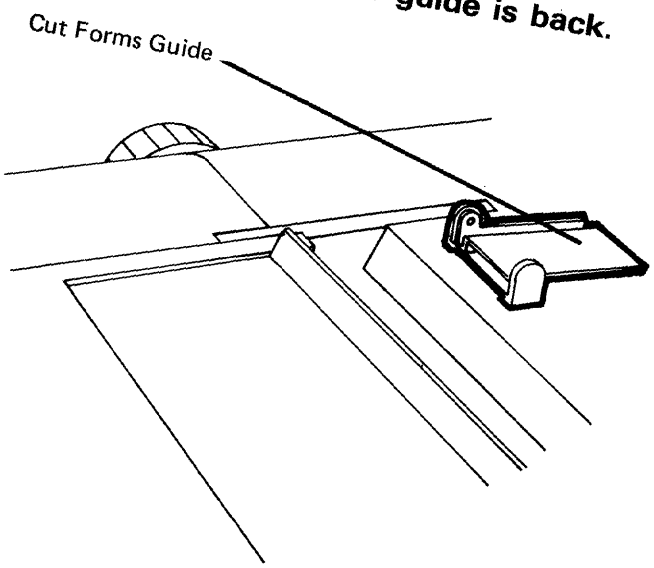

11. **Insert the back legs of the forms tractor assembly into the back cover slots.**

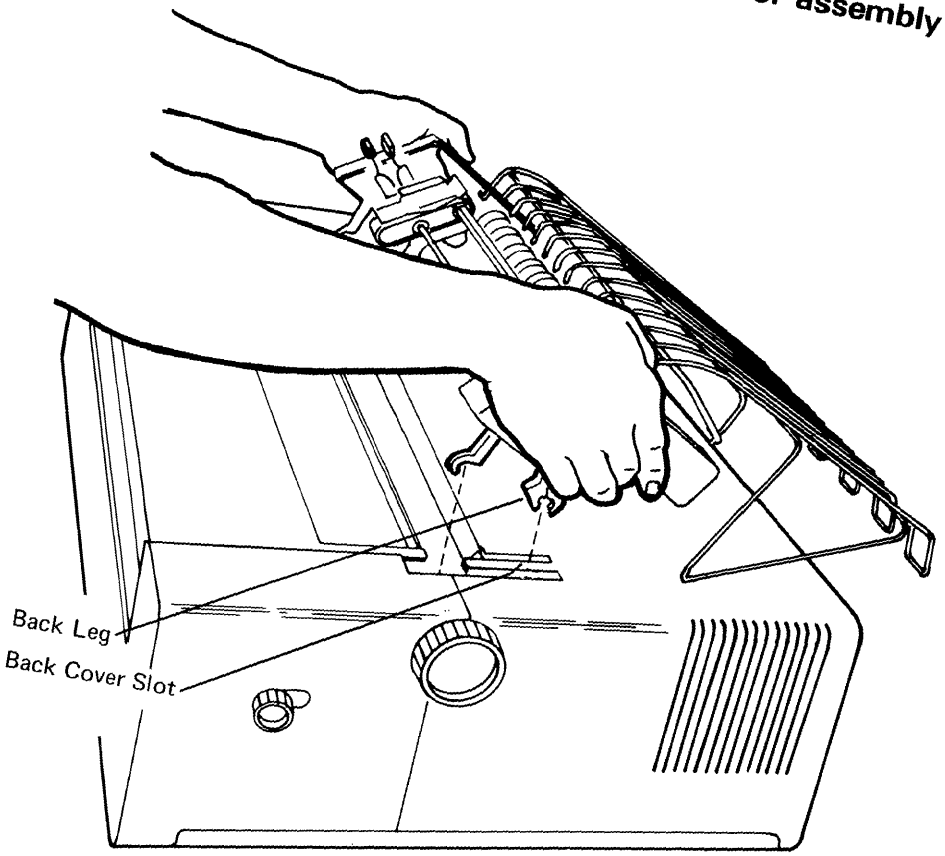

12. **Press down firmly until the back legs snap into place. Then pivot the forms tractor toward the front of the printer until the front legs snap into place.**

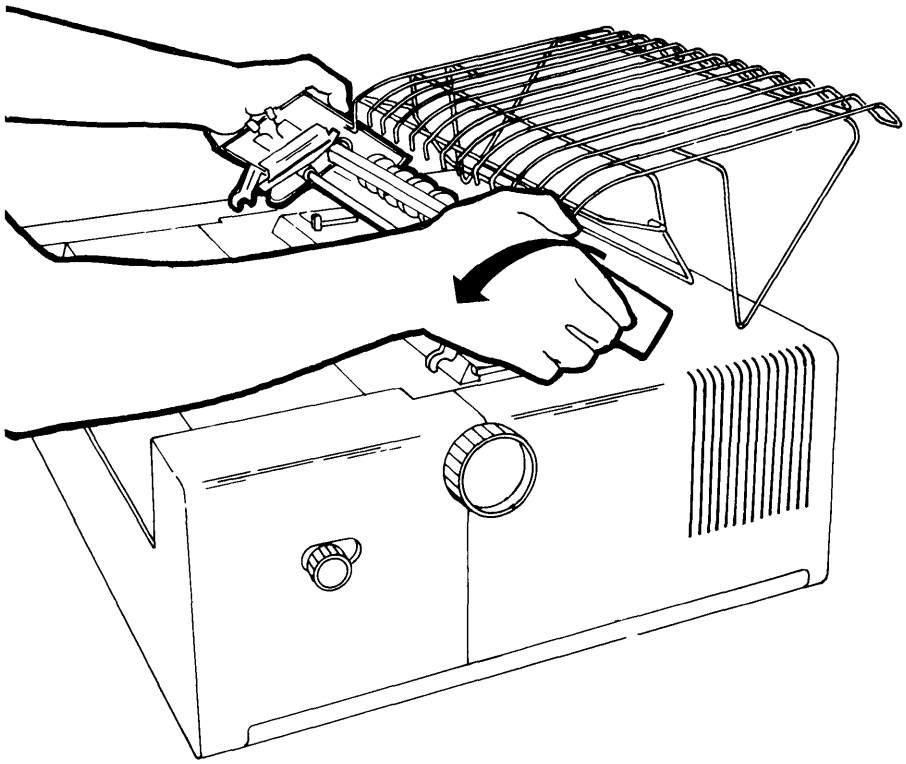

13. **Check the final placement by making sure the Paper Advance knobs turn freely and the tractor pins move.**

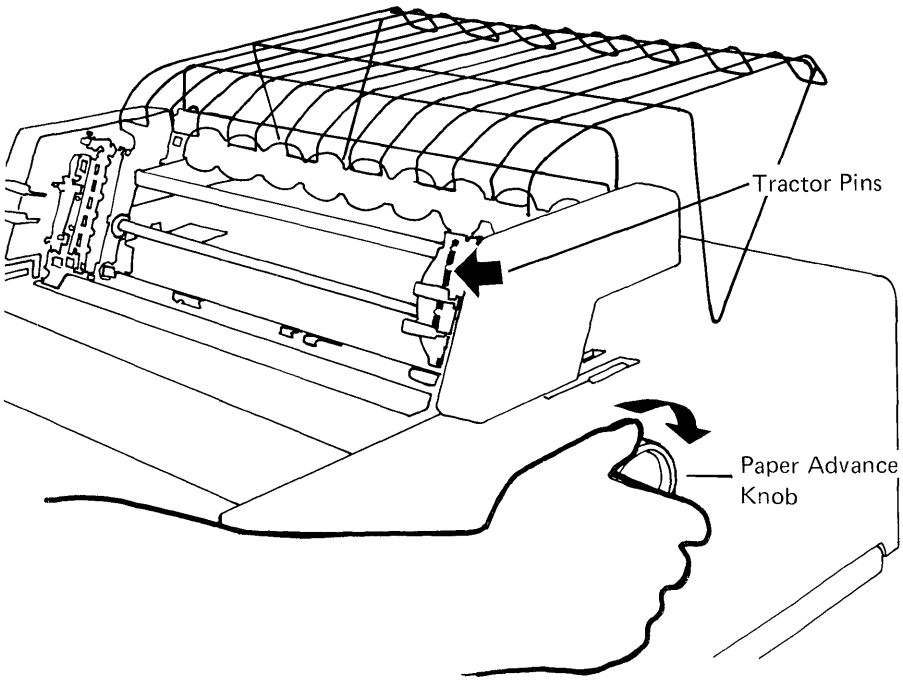

14. If your printer has a forms stand, place the stand on the floor behind the printer. You can place a box of forms under the forms stand shelf.

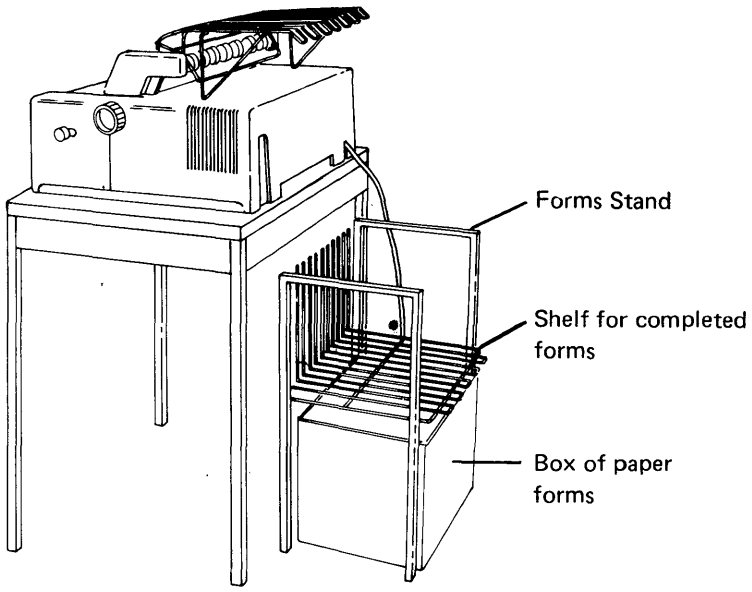

If you do not have a forms stand, you can put some forms on the table behind the printer.

15. Load forms into the printer as follows:

a. Slide the top cover open.

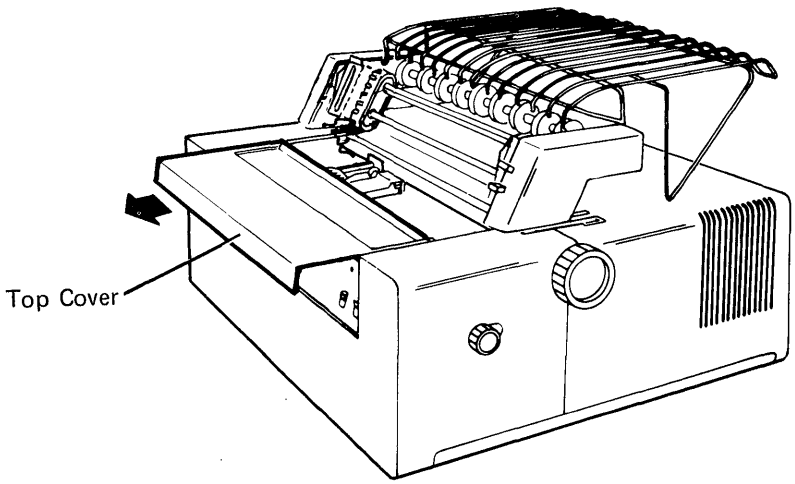

b. **Push the paper release lever toward the back of the printer.**

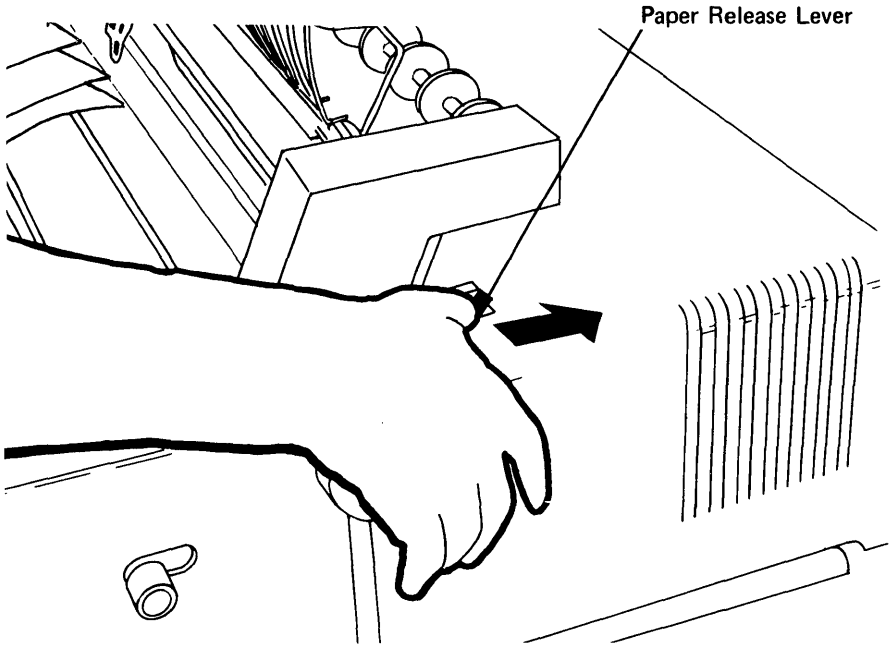

c. **Squeeze the adjusting levers on the right forms tractor and slide it to the right as far as it will go.**

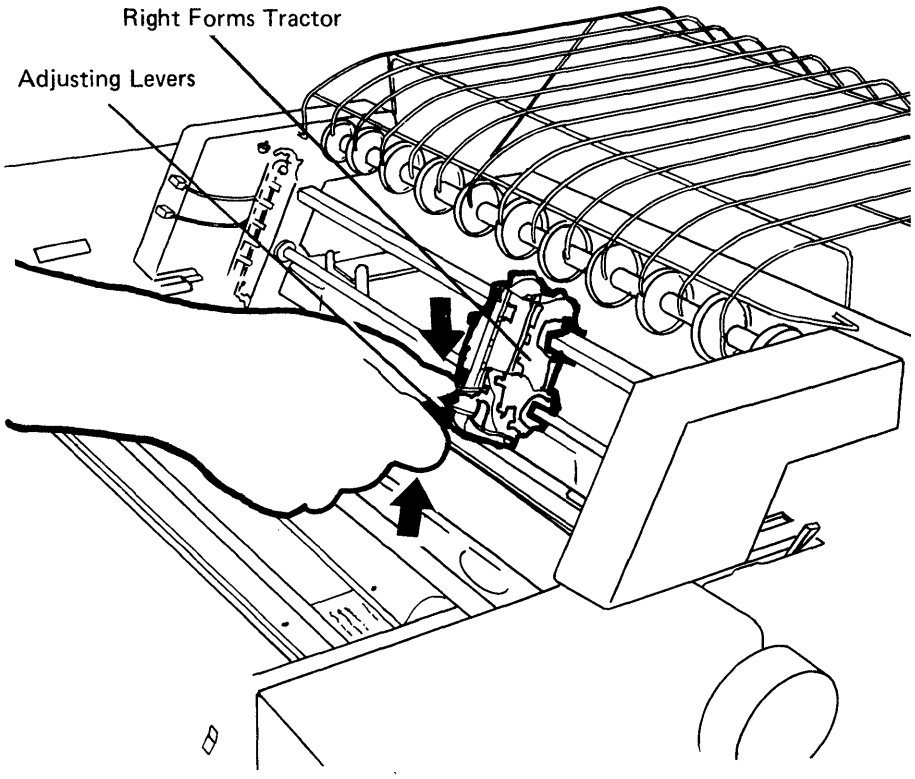

d. Tilt the forms guide rack up.

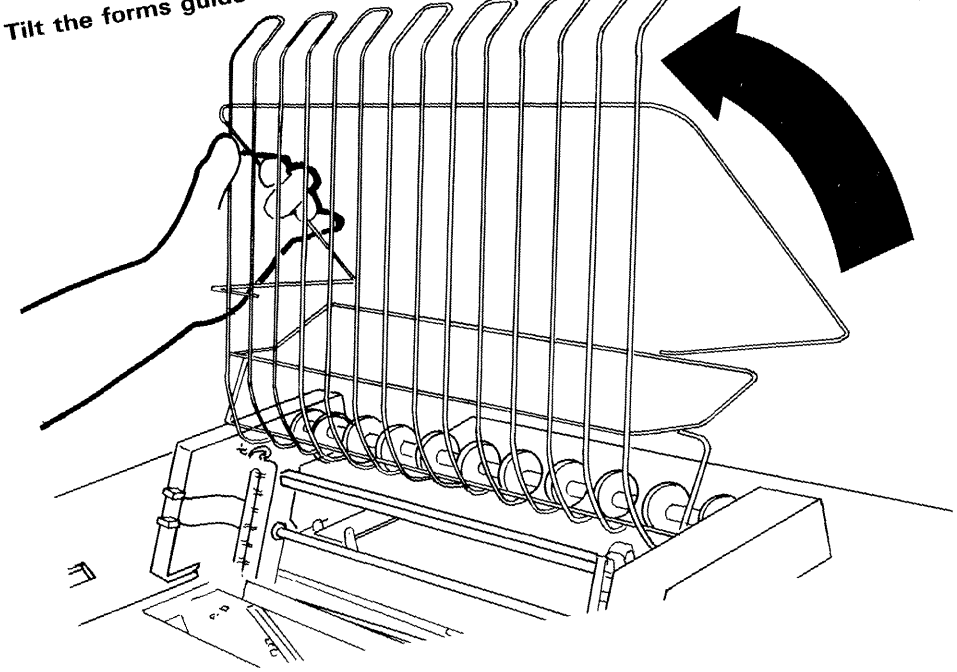

e. Slide the paper over the rollers.

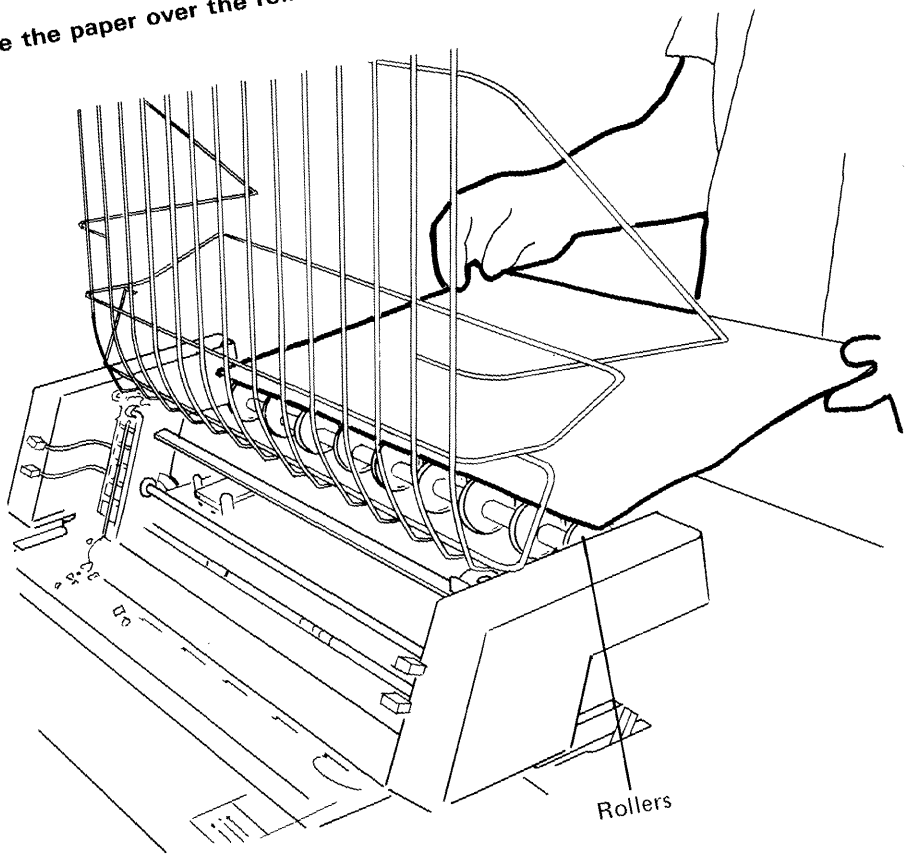

f. **Slide the paper down behind the platen.**

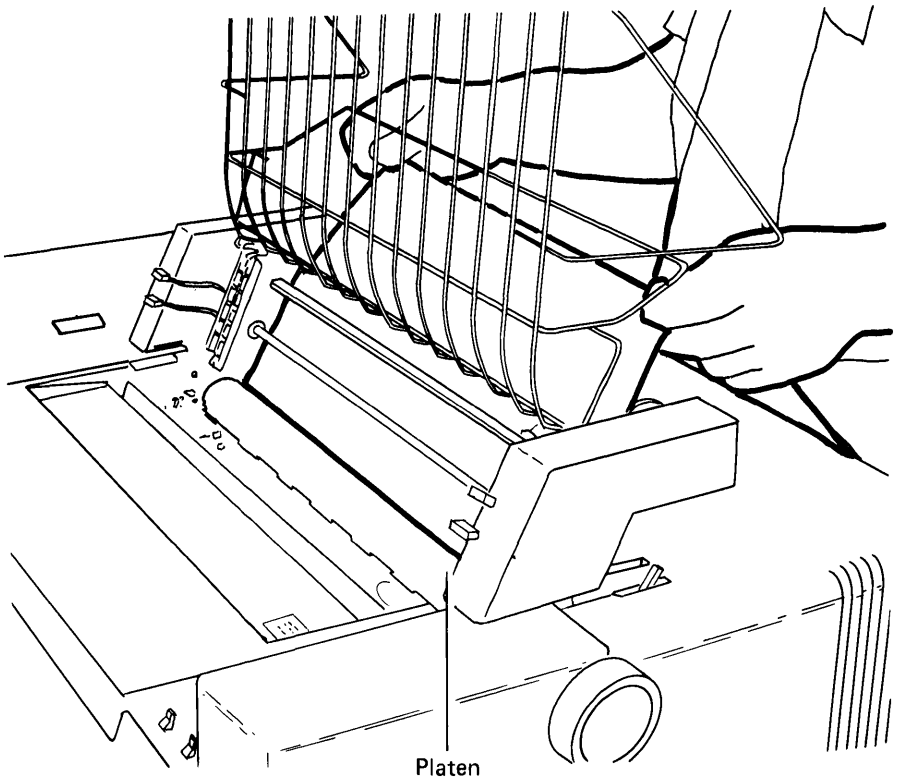

g. **Turn the paper advance knob to move the paper around the platen until some paper appears above the print head.**

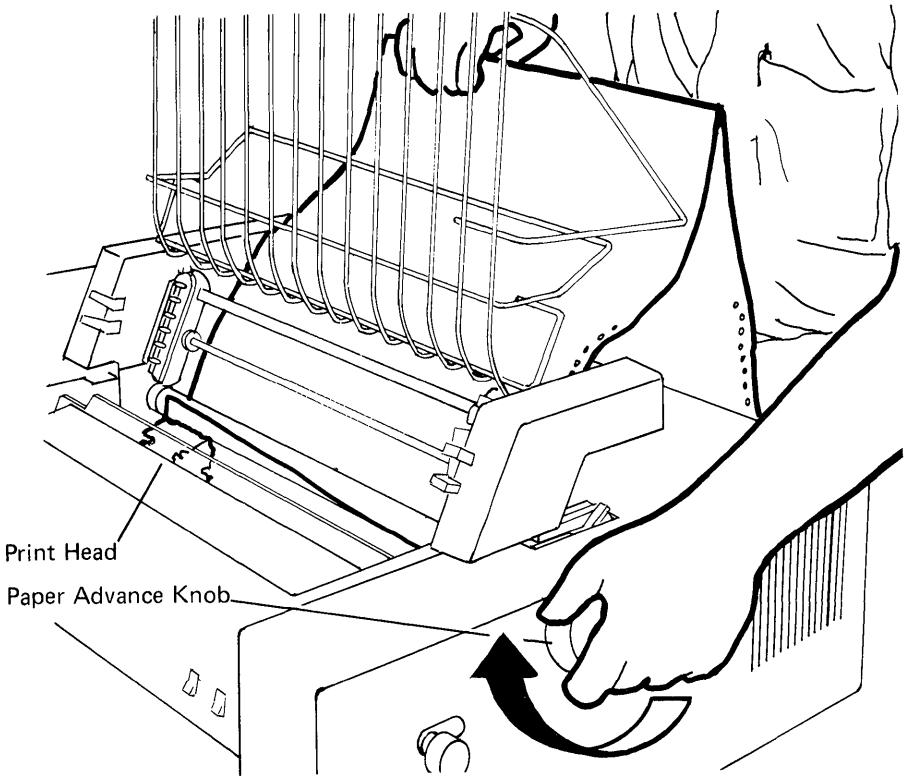

h. Tilt the forms guide rack down.

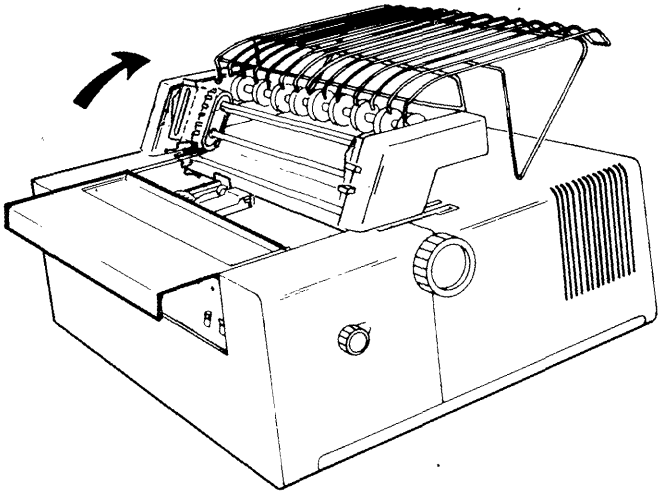

i. Open both tractor covers.

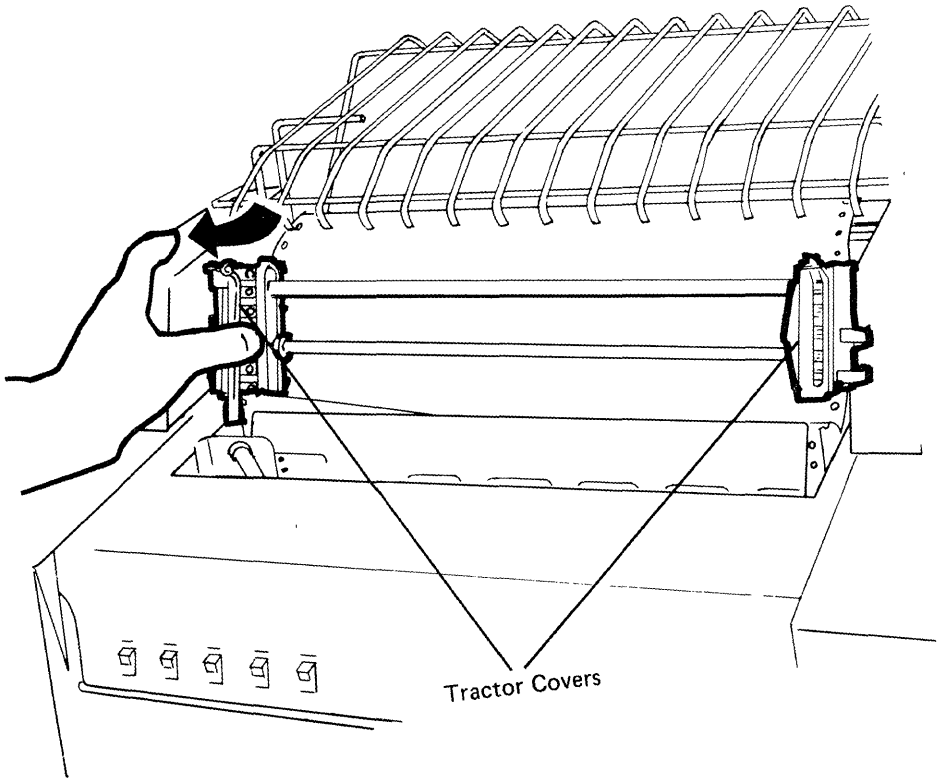

j. **Pull the paper release lever forward. (This action lets the printer detect the end of continuous forms when it occurs.)**

Note: Leave the paper release lever in the forward position when you are using continuous forms.

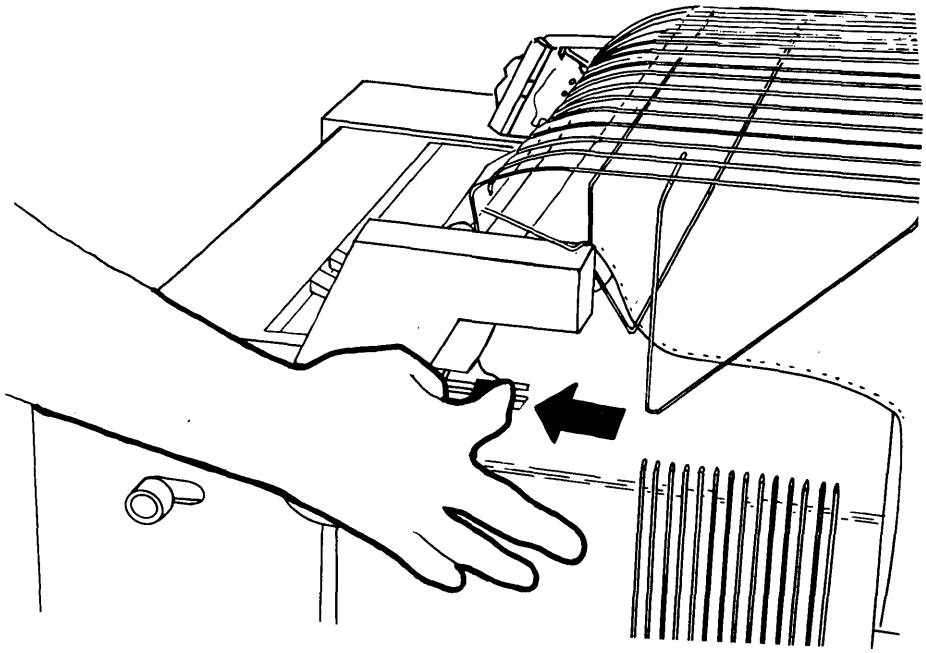

k. **Pull up enough paper to reach at least the top tractor pin.**

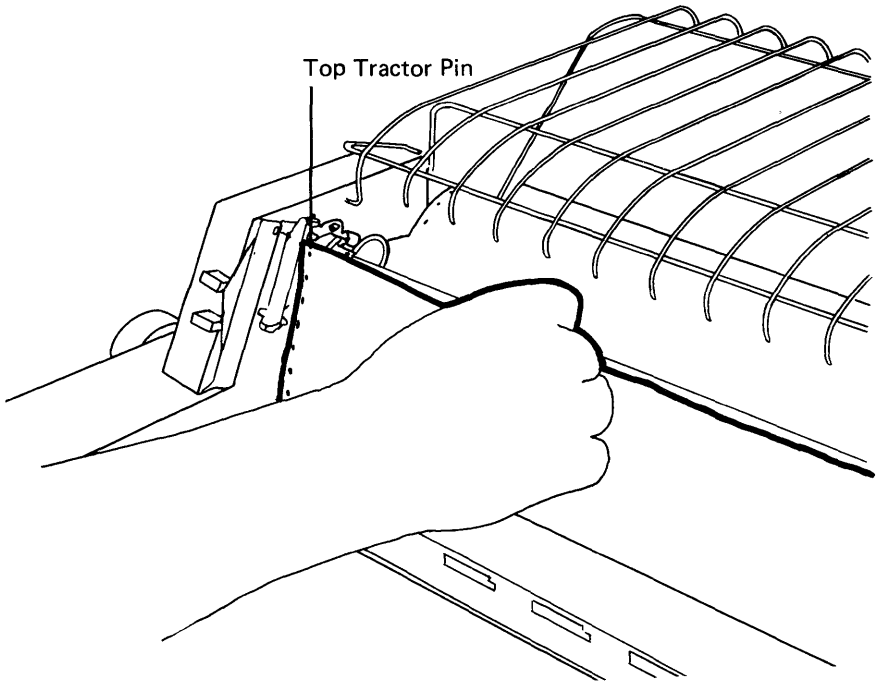

l. Place the left margin holes over the left tractor pins; then close the left tractor cover.

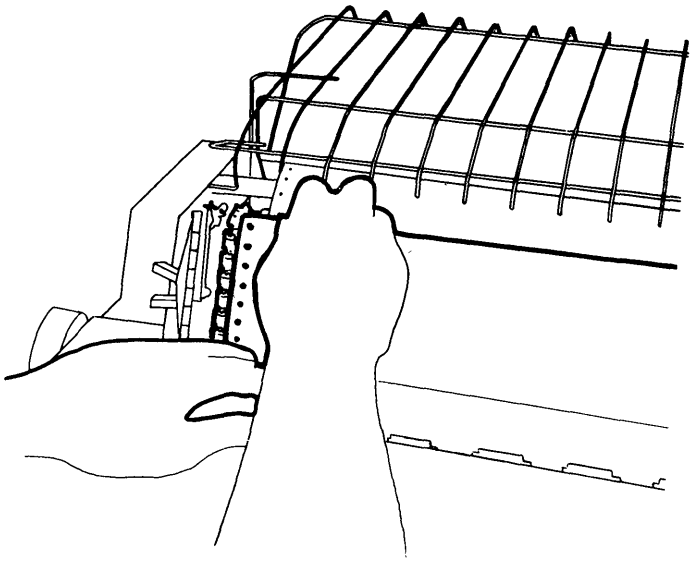

m. Squeeze the adjusting levers on the right forms tractor and slide it to the left until the right margin holes can be placed over the right tractor pins. (Make sure the margin holes in each side of the paper are positioned so that the paper is level.)

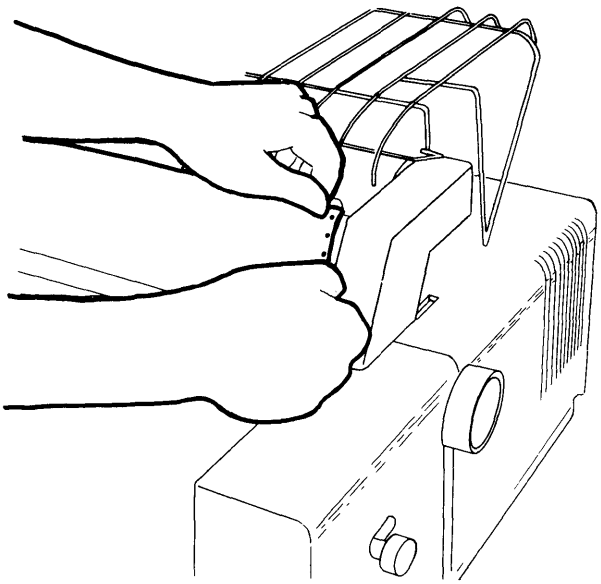

n. Close the right tractor cover. Remove any slack or bulges in the paper by sliding the right forms tractor left or right.

o. Close the top cover.

16. **Make sure the Power switch is set to Off.**

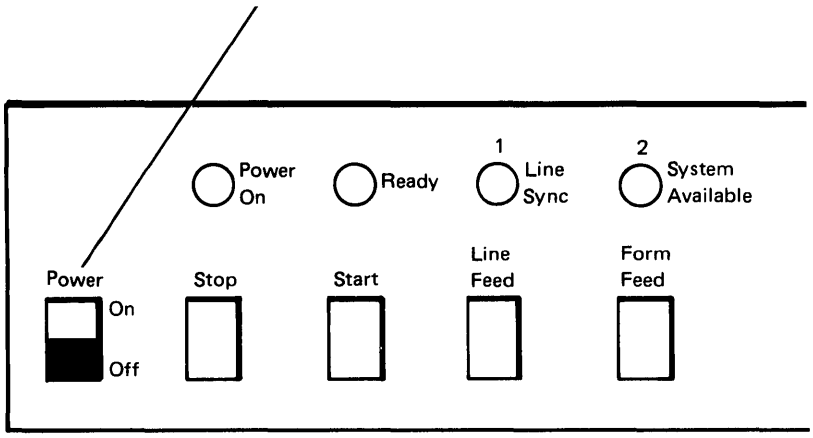

17. **Make sure the Status switch is set to Normal.**

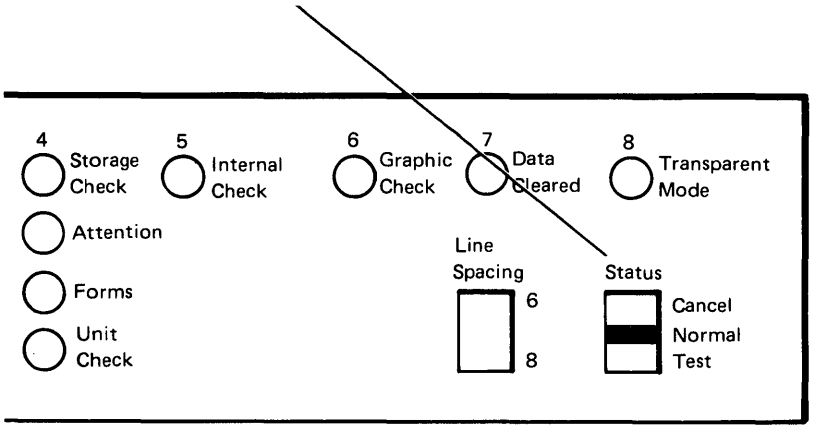

18. **Plug in the power cord.**

19. Set the Power switch to On. (This causes the print head to move.)

After approximately 5 seconds, the following lights should be the only lights on:

- Power On
- Data Cleared (7)
- Transparent Mode (8)

These lights should be on if there is power at the outlet, the paper is loaded properly, the tape securing the print head has been removed, and the print head can be manually moved.

20. Press each of the following switches to make sure the forms are properly installed and the paper is feeding properly.

Form Feed

Normally advances the paper one line each time you press this switch, unless the number of lines advanced is changed by the host program.

Line Feed

Advances the paper one line each time you press this switch.

Start

Causes the Ready light to turn on and the print head to move.

Stop

Causes the Ready light to turn off and the print head to move to the left margin area.

TO PERFORM THE PRINT TEST

Do the following procedure to determine if you printer will print correctly. If you have trouble while doing this procedure, ask for assistance or refer to *Chapter 5. Problem Determination* in the *IBM 5256 Printer Operator's Guide*, GA21-9260.

1. **Set the Status switch to Test. (The Data Cleared [7] and Transparent Mode [8] lights go off.)**

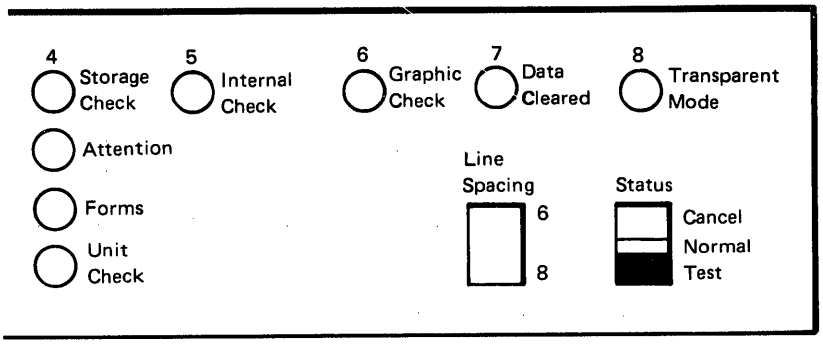

2. **Press Line Feed.**

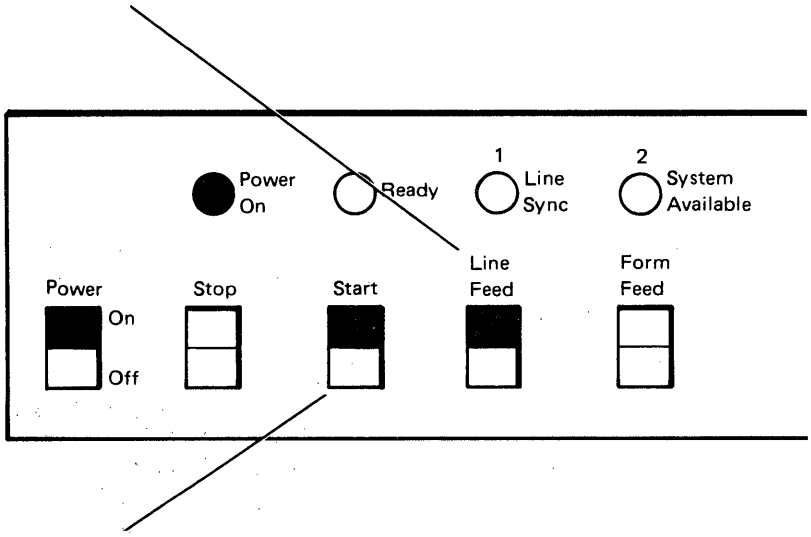

3. **Press Start. (The Ready light comes on, then goes off.)**

4. **Press Start again to start the printing. Allow about 8 lines to print. The press Stop to stop the printing. (The Ready light stays on.)**

The printout should look like one of the following:

US and Canada Printout

See *Note*

```
----------¢.<(+|&----------!$*);¬-/---------¦,%_>?----------`:#@'="-abcdefghi--------jklmnopqr---------¯stuvwxyz------------------------------
{ABCDEFGHI-------}JKLMNOPQR------\-STUVWXYZ-------0123456789-------
----------¢.<(+|&----------!$*);¬-/---------¦,%_>?----------`:#@'="-abcdefghi--------jklmnopqr---------¯stuvwxyz------------------------------
{ABCDEFGHI-------}JKLMNOPQR------\-STUVWXYZ-------0123456789-------
----------¢.<(+|&----------!$*);¬-/---------¦,%_>?----------`:#@'="-abcdefghi--------jklmnopqr---------¯stuvwxyz------------------------------
{ABCDEFGHI-------}JKLMNOPQR------\-STUVWXYZ-------0123456789-------
----------¢.<(+|&----------!$*);¬-/---------¦,%_>?----------`:#@'="-abcdefghi--------jklmnopqr---------¯stuvwxyz------------------------------
{ABCDEFGHI-------}JKLMNOPQR------\-STUVWXYZ-------0123456789-------
----------¢.<(+|&----------!$*);¬-/---------¦,%_>?----------`:#@'="-abcdefghi--------jklmnopqr---------¯stuvwxyz------------------------------
{ABCDEFGHI-------}JKLMNOPQR------\-STUVWXYZ-------0123456789-------
----------¢.<(+|&----------!$*);¬-/---------¦,%_>?----------`:#@'="-abcdefghi--------jklmnopqr---------¯stuvwxyz------------------------------
{ABCDEFGHI-------}JKLMNOPQR------\-STUVWXYZ-------0123456789-------
----------¢.<(+|&----------!$*);¬-/---------¦,%_>?----------`:#@'="-abcdefghi--------jklmnopqr---------¯stuvwxyz------------------------------
{ABCDEFGHI-------}JKLMNOPQR------\-STUVWXYZ-------0123456789-------
----------¢.<(+|&----------!$*),¬-/---------¦,%_>?----------`:#@'="-abcdefghi--------jklmnopqr---------¯stuvwxyz------------------------------
{ABCDEFGHI-------}JKLMNOPQR------\-STUVWXYZ-------0123456789-------
```

Note: The printout character for this position could be a ■ (blob) instead of a - (hyphen).

Multinational Character Set Printout

```
 âäàáãåçñ[.<(+!&éêëèíîïìß]$*),^-/ÂÄÀÁÃÅÇÑ¦,%_>?øÉÊËÈÍÎÏÌ`:#@'="Øabcdefghi«»đ≤Þ±°jklmnopqrªºæ¸Æ¤µ¯stuvwxyz¡¿Ð↑Þ-¢£¥₧ƒ§¶---¬|≠¨´‗
{ABCDEFGHI-ôöòóõ}JKLMNOPQR≥ûüùúÿ\ STUVWXYZ²ÔÖÒÓÕ0123456789³ÛÜÙÚ-
 âäàáãåçñ[.<(+!&éêëèíîïìß]$*),^-/ÂÄÀÁÃÅÇÑ¦,%_>?øÉÊËÈÍÎÏÌ`:#@'="Øabcdefghi«»đ≤Þ±°jklmnopqrªºæ¸Æ¤µ¯stuvwxyz¡¿Ð↑Þ-¢£¥₧ƒ§¶---¬|≠¨´‗
{ABCDEFGHI-ôöòóõ}JKLMNOPQR≥ûüùúÿ\ STUVWXYZ²ÔÖÒÓÕ0123456789³ÛÜÙÚ-
 âäàáãåçñ[.<(+!&éêëèíîïìß]$*),^-/ÂÄÀÁÃÅÇÑ¦,%_>?øÉÊËÈÍÎÏÌ`:#@'="Øabcdefghi«»đ≤Þ±°jklmnopqrªºæ¸Æ¤µ¯stuvwxyz¡¿Ð↑Þ-¢£¥₧ƒ§¶---¬|≠¨´‗
{ABCDEFGHI-ôöòóõ}JKLMNOPQR≥ûüùúÿ\ STUVWXYZ²ÔÖÒÓÕ0123456789³ÛÜÙÚ-
 âäàáãåçñ[.<(+!&éêëèíîïìß]$*);^-/ÂÄÀÁÃÅÇÑ¦,%_>?øÉÊËÈÍÎÏÌ`:#@'="Øabcdefghi«»đ≤Þ±°jklmnopqrªºæ¸Æ¤µ¯stuvwxyz¡¿Ð↑Þ-¢£¥₧ƒ§¶---¬|≠¨´‗
{ABCDEFGHI-ôöòóõ}JKLMNOPQR≥ûüùúÿ\ STUVWXYZ²ÔÖÒÓÕ0123456789³ÛÜÙÚ-
 âäàáãåçñ[.<(+!&éêëèíîïìß]$*),^ /ÂÄÀÁÃÅÇÑ¦,%_>?øÉÊËÈÍÎÏÌ`:#@'="Øabcdefghi«»đ≤Þ±°jklmnopqrªºæ¸Æ¤µ¯stuvwxyz¡¿Ð↑Þ-¢£¥₧ƒ§¶---¬|≠¨´‗
{ABCDEFGHI-ôöòóõ}JKLMNOPQR≥ûüùúÿ\ STUVWXYZ²ÔÖÒÓÕ0123456789³ÛÜÙÚ-
 âäàáãåçñ[.<(+!&éêëèíîïìß]$*);^-/ÂÄÀÁÃÅÇÑ¦,%_>?øÉÊËÈÍÎÏÌ`:#@'="Øabcdefghi«»đ≤Þ±°jklmnopqrªºæ¸Æ¤µ¯stuvwxyz¡¿Ð↑Þ-¢£¥₧ƒ§¶---¬|≠¨´‗
{ABCDEFGHI ôöòóõ}JKLMNOPQR≥ûüùúÿ\ STUVWXYZ²ÔÖÒÓÕ0123456789³ÛÜÙÚ-
 âäàáãåçñ[.<(+!&éêëèíîïìß]$*),^-/ÂÄÀÁÃÅÇÑ¦,%_>?øÉÊËÈÍÎÏÌ`:#@'="Øabcdefghi«»đ≤Þ±°jklmnopqrªºæ¸Æ¤µ¯stuvwxyz¡¿Ð↑Þ-¢£¥₧ƒ§¶---¬|≠ ´‗
{ABCDEFGHI ôöòóõ}JKLMNOPQR≥ûüùúÿ\ STUVWXYZ²ÔÖÒÓÕ0123456789³ÛÜÙÚ-
 âäàáãåçñ[.<(+!&éêëèíîïìß]$*),^-/ÂÄÀÁÃÅÇÑ¦,%_>?øÉÊËÈÍÎÏÌ`:#@'="Øabcdefghi«»đ≤Þ±°jklmnopqrªºæ¸Æ¤µ¯stuvwxyz¡¿Ð↑Þ-¢£¥₧ƒ§¶---¬|≠ ´‗
{ABCDEFGHI ôöòóõ}JKLMNOPQR≥ûüùúÿ\ STUVWXYZ²ÔÖÒÓÕ0123456789³ÛÜÙÚ-
```

If the printout is not legible:

a. **Press the Stop switch.**

b. **Adjust the copy control dial. Turn the dial to the next *higher* number if the printing is smudging. Turn the dial to the next *lower* number if the printing is light.**

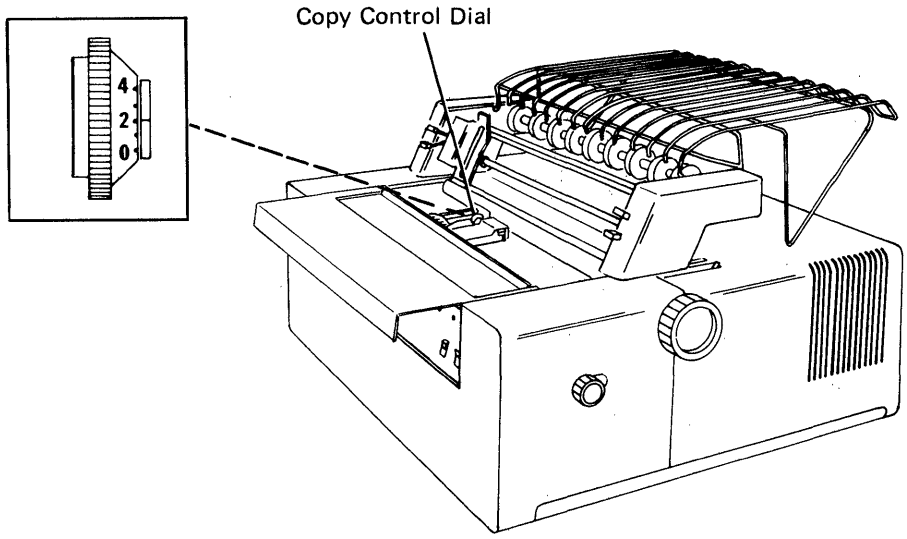

c. **Repeat step 4.**

5. **Set the Status switch to Normal. (The Data Cleared and Transparent Mode lights turn on.)**

6. **Set the Power switch to Off.**

If all the steps in this procedure have been completed successfully, proceed to Section 2.

1. Set the Power switch to Off.

Before connecting the cable to your printer, make sure the other end is connected to a system, a display station, or another printer.

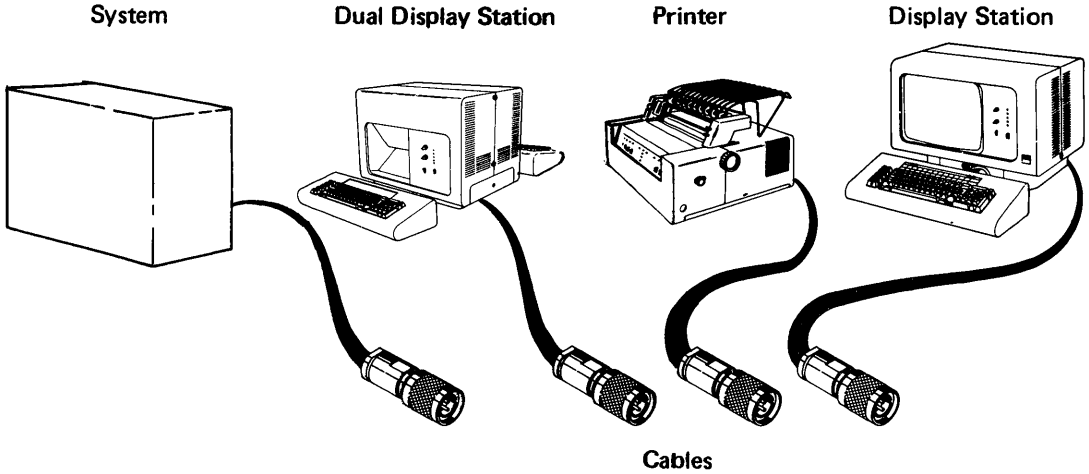

If the cable you are connecting to your printer comes from a 5252 Dual Display Station, a 5251 Display Station Model 1 or 11, or a 5256 Printer, *make sure that the Terminator switch on that machine is set to 2.*

The following illustration shows where the Terminator switch is located.

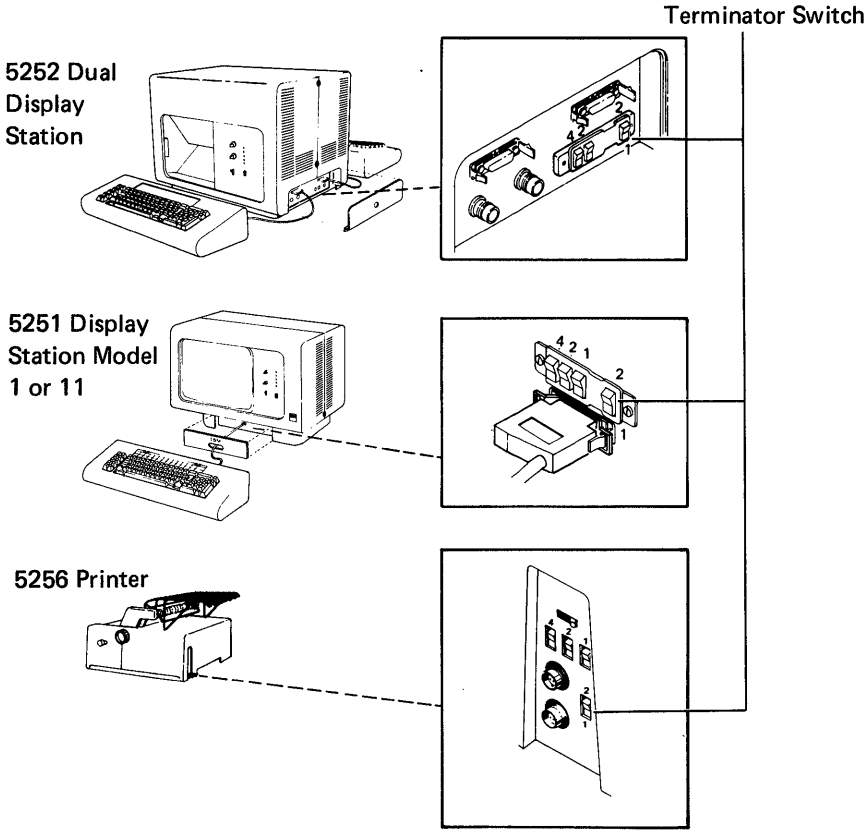

The cable that you must connect to your printer plugs into a socket on the rear access panel on the back of the printer. This panel resembles either illustration A or illustration B.

Illustration A

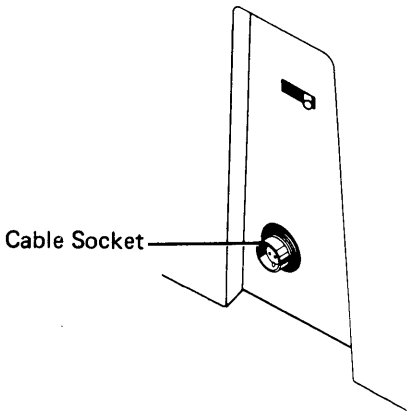

Illustration B

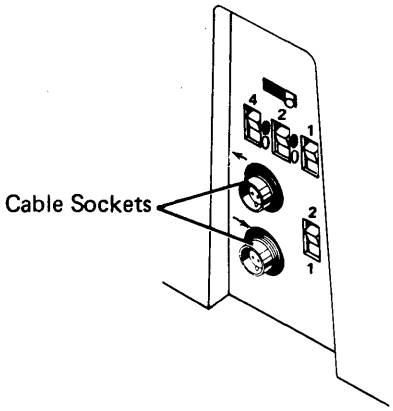

2. **If the Rear Access Panel resembles illustration A, plug into the cable socket as shown in Figure 1. After plugging in the cable, proceed to** *Printer Checkout* **if your printer attaches to a 5251 Display Station Model 2 or 12, a System/34, or a System/38. If your printer** *does not* **attach to a 5251 Display Station Model 2 or 12, a System/34, or a System/38, go to the system setup procedure manual and do the checkout procedure listed for the printer.**

   If the Rear Access Panel resembles illustration B, plug into the lower socket. See *Figure 1* **for directions on plugging the cable in. After plugging the cable in, proceed to** *Setting the Switches* **on the following page.**

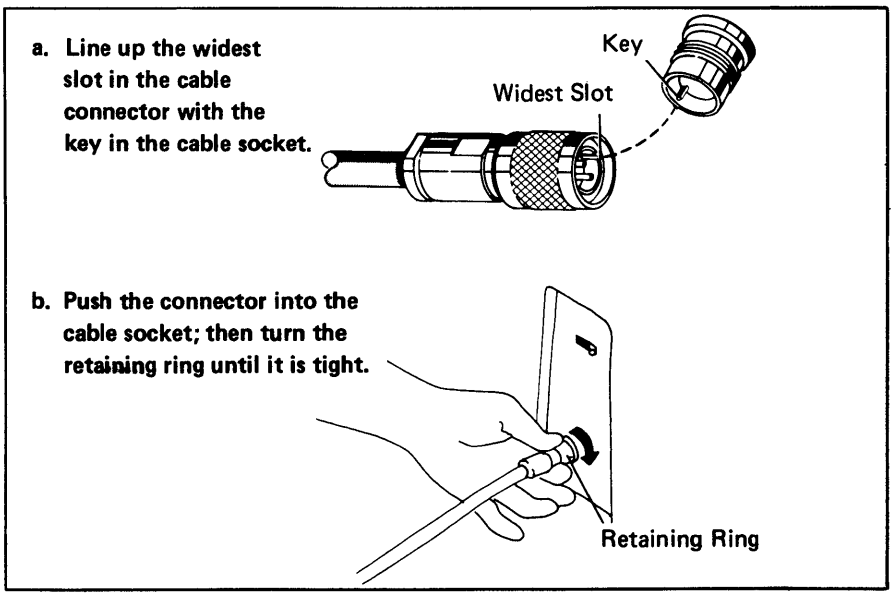

Figure 1. Connecting Cable to Socket

SETTING THE SWITCHES

There are two types of switches to set: Address and Terminator.

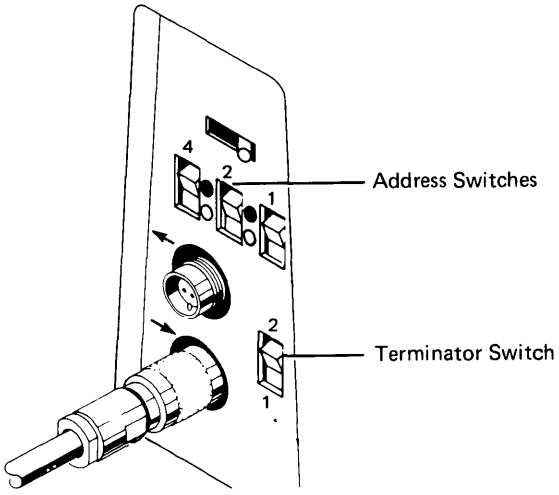

To Set the Address Switches:

1. **Contact the person responsible for assigning the work station address (for example, your supervisor or system operator). Ask for your work station address, which will be a number from 0 through 6.**

2. **Set the Address switches to the address you have received.**

Use this table to determine the settings of the three Address switches.

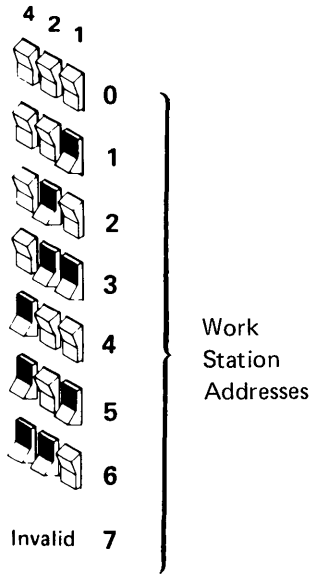

3. **If your printer attaches to a 5251 Display Station Model 2 or 12, a System/34, or a System/38, set the Terminator switch to 1 and proceed to** *Printer Checkout*.

   If your printer *does not* **attach to a 5251 Display Station Model 2 or 12, a System/34, or a System/38, proceed to** *Cable Thru Feature*.

PRINTER CHECKOUT

The following procedure ensures that the 5256 Printer is properly set up and communicating with a 5251 Display Station Model 2 or 12, a System/34, or a System/38. Before doing this procedure, make sure that the cable that attaches to the 5251 Display Station Model 2 or 12, System/34, or System/38 is plugged in and that it is powered up. After doing this procedure, proceed to *Cable Thru Feature.*

If you have any problems while doing this checkout procedure, refer to the *Problem Checklist* on the last two pages of this section.

1. Make sure the Status switch is set to Normal.

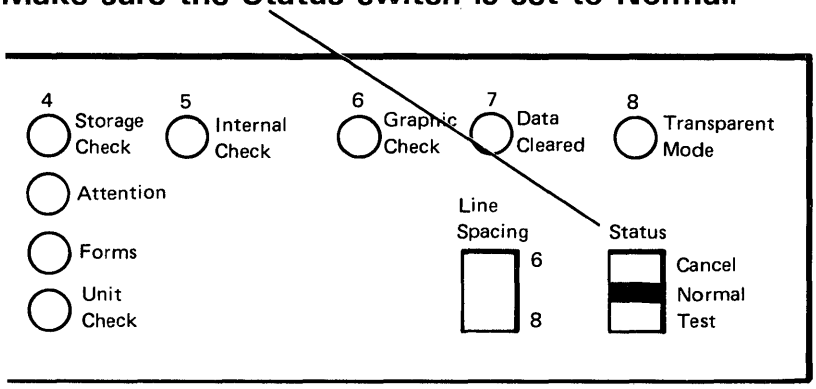

2. Set the Power switch to On.

After approximately five seconds, the Power On, Line Sync, and System Available lights should be the only lights on.

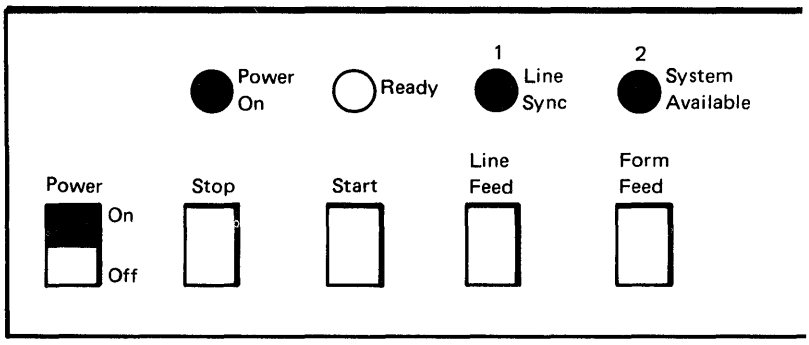

3. Press Start.

The Ready light also turns on now and the print head moves into position to start printing.

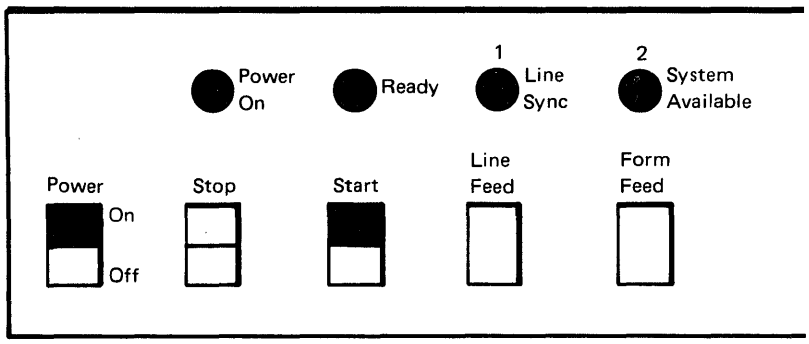

CABLE THRU FEATURE

If your printer has the switches shown in the following illustration and is to be connected at this time to another work station (5252 Dual Display Station, 5251 Display Station Model 1 or 11, or 5256 Printer), proceed to *Cable Thru Considerations*.

If your printer does not have the indicated switches or if your printer does have the indicated switches but another work station *will not* be connected to it, make sure that the Terminator switch on your printer is set to 1. If your printer attaches to a 5251 Display Station Model 2 or 12, a System/34, or a System/38, setup is complete. If your printer *does not* attach to a 5251 Display Station Model 2 or 12, a System/34, or a System/38, go to the system setup procedure manual for completing the printer setup.

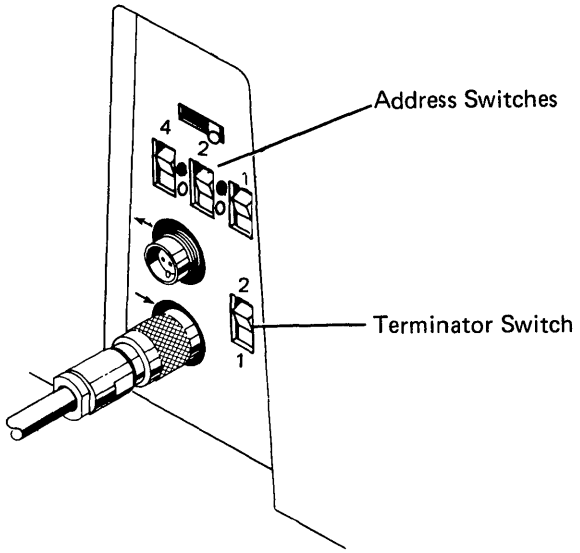

Cable Thru Considerations

If another work station is to be connected to the printer you have just set up, do the following:

1. **Connect the cable that leads to the next work station into the upper cable socket.**

2. **Set the Terminator switch to 2. If your printer attaches to a 5251 Display Station Model 2 or 12, a System/34, or a System/38, setup is complete. If your printer** *does not* **attach to a 5251 Display Station Model 2 or 12, a System/34, or a System/38, go to your system setup procedure manual for completing the printer setup.**

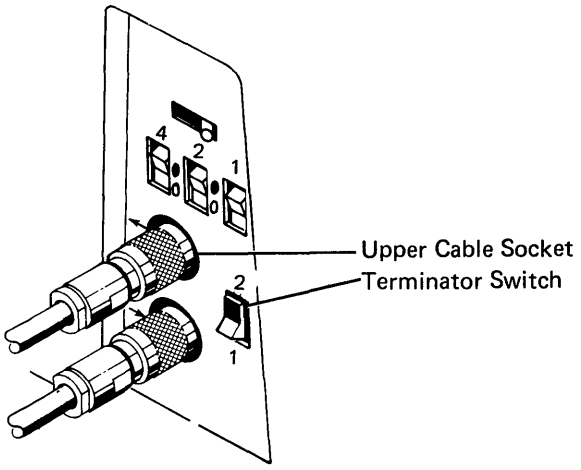

PROBLEM CHECKLIST

If the conditions in Printer Checkout do not appear:

1. **Ensure that the 5251 Display Station Model 2 or 12, System/34, or System/38 to which your printer is connected is:**

   - **Operating.**

   - **Trying to communicate with the printer. (The system operator might have to run a program that requires printing.)**

   - **Configured to recognize the setting of the Address switches. (A work station without the Cable Thru feature has a work station address of zero.)**

2. **Set the Power switch to the Off position and recheck all cable connections to make sure they are properly positioned and tightened.**

3. **Make sure the Status switch is set to Normal.**

(continued on next page)

4. Set the Power switch to On.

Note: When printers or display stations are connected together (Cable Thru feature), if the station on the end of the line has a Terminator switch, the Terminator switch must be set to 1. The Terminator switches of all other work stations on that line must be set to 2.

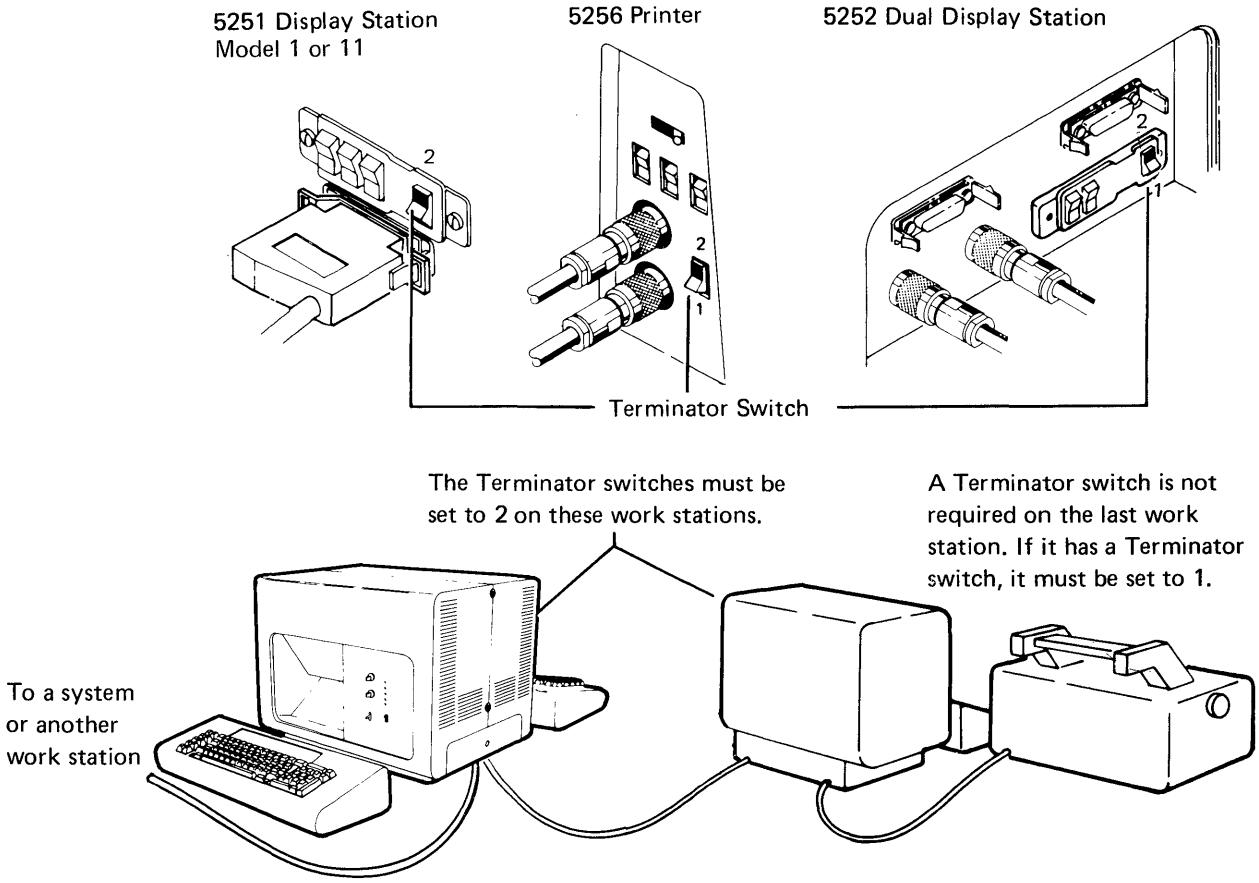

5. If the conditions in *Printer Checkout* still do not appear, refer to Chapter 5 *Problem Determination* in the *IBM 5256 Printer Operator's Guide,* GA21-9260.

READER'S COMMENT FORM

Please use this form only to identify publication errors or request changes to publications. Technical questions about IBM systems, changes in IBM programming support, requests for additional publications, etc, should be directed to your IBM representative or to the IBM branch office nearest your location.

Error in publication (typographical, illustration, and so on). **No reply.**

Page Number *Error*

Inaccurate or misleading information in this publication. Please tell us about it by using this postage-paid form. We will correct or clarify the publication, or tell you why a change is not being made, provided you include your name and address.

Page Number *Comment*

IBM may use and distribute any of the information you supply in any way it believes appropriate without incurring any obligation whatever. You may, of course, continue to use the information you supply.

Name _____

Address _____

_____

● No postage necessary if mailed in the U.S.A.

Cut Along Line

Fold and tape Please do not staple Fold and tape

NO POSTAGE NECESSARY IF MAILED IN THE UNITED STATES

BUSINESS REPLY MAIL

FIRST CLASS PERMIT NO. 40 ARMONK, N. Y.

POSTAGE WILL BE PAID BY ADDRESSEE:

IBM CORPORATION
General Systems Division
Development Laboratory
Publications, Dept. 245
Rochester, Minnesota 55901

Fold and tape Please do not staple Fold and tape

IBM

International Business Machines Corporation

General Systems Division
4111 Northside Parkway N.W.
P.O. Box 2150
Atlanta, Georgia 30301
(U.S.A. only)

General Business Group/International
44 South Broadway
White Plains, New York 10601
U.S.A.
(International)

International Business Machines Corporation

General Systems Division
4111 Northside Parkway N.W.
P.O. Box 2150
Atlanta, Georgia 30301
(U.S.A. only)

General Business Group/International
44 South Broadway
White Plains, New York 10601
U.S.A.
(International)

IBM 5256 Printer Setup Procedure (File No. S5250/S34/S38-00) Printed in U.S.A. GA21-9290-2