IBM 3704 and 3705 Program Reference Handbook

GY30-3012-4

IBM Corporation, Publications Center, P.O. Box 12195,
Research Triangle Park, North Carolina 27709

IBM 3704 and 3705 Program Reference Handbook

GY30-3012-4

IBM Corporation, Publications Center, P.O. Box 12195,
Research Triangle Park, North Carolina 27709

Programs supported by this handbook:

Program Name	Handbook Reference
Network Control Program/OS, Version 1 (V1M2)	NCP1
Network Control Program/VS, Version 2 (V2M1)	NCP2
Network Control Program/VS, Version 5 (V5M0)	NCP#
Emulation Program (V3M0)	EP

Summary of Amendments for GY30-3012-4

Previous changes in this manual include:

- Support for Network Control Program/VS, Version 5. (Includes NCP 3.2, NCP 4.0, and SDLC/BSC Path Function.)
- Support for Emulation Program V3M0.
- Additional Network Commands.
- NCP exception responses.
- 2848/2260 line character codes.
- EBCDIC line character codes.
- Interface addressing.

New information in this manual includes:

- Support for Network Control Program/VS, Version 5.
- Support for Emulation Program B3M0 (old base and new base)
- Type 4 channel adapter
- Type 3 communications scanner.

Fifth Edition (June 1976)

This edition is a major revision of, and obsoletes the previous edition, GY30-3012-3. Refer to the Summary of Amendments for the changes to this edition. Vertical bars throughout the manual show where changes have been made.

Changes are periodically made to the information herein; before using this publication in connection with the operation of IBM systems, consult the IBM System/370 Bibliography, GA20-0001 and associated Technical Newsletters for the editions that are applicable and current.

Requests for copies of IBM publications should be made to your IBM representative or to the IBM branch office serving your locality.

This manual has been prepared by the IBM Systems Communications Division, Publications Center, Department E01, P.O. Box 12195, Research Triangle Park, North Carolina 27709. A form for reader's comments is provided at the back of this publication. If the form has been removed, comments may be sent to the above address. Comments become the property of IBM.

Preface

This handbook provides the System Programmer and IBM Program Support Representative with reference information about the Network Control Program (NCP) and Emulation Program (EP). It is designed to provide quick access to often-used diagnostic and debug information. For a more comprehensive knowledge of a subject, refer to the publications listed under *Related Publications.*

Old base EP modules support the type 1 channel adapter, the type 1 communication scanner or up to four type 2 communication scanners.

New base EP modules support the type 4 channel adapter and the type 3 communication scanner in the 3705II. Additionally, support is provided for multiple type 4 channel adapters and multiple-subchannel access (MSLA).

This handbook consists of 18 sections. Sections 1 through 17 contain reference information. Section 18 is an *Index to NCP and EP Reference Material.* This index, in addition to providing page numbers to information in this handbook, points to other IBM publications containing reference information.

Related Publications

IBM 3705 Communications Controller, Network Control Program, PLM, Version 1, SY30-3003.

IBM 3704 and 3705 Communications Controllers, Network Control Program/VS, PLM, Version 2, SY30-3007.

IBM 3704 and 3705 Communications Controllers, Network Control Program/VS, PLM, Version 4, SY30-3013.

IBM 3704 and 3705 Communications Controllers, Emulation Program, PLM, SY30-3001. *(old base)*

IBM 3705II Communications Controller, Emulation Program, PLM, SY30-3031. *(new base)*

NCP/TCAM Network User's Guide, GC30-3009.

Guide to Using the IBM 3704 Control Panel, GA27-3086.

Guide to Using the IBM 3705 Control Panel, GA27-3087.

IBM 3704 and 3705 Communications Controllers, Network Control Program, Generation and Utilities, Guide and Reference Manual, GC30-3000.

IBM 3704 and 3705 Communications Controllers, Network Control Program/VS, Generation and Utilities, Guide and Reference Manual, GC30-3007.

IBM 3704 and 3705 Communications Controllers, Network Control Program/VS, Generation and Utilities, Guide and Reference Manual (for OS/VS and DOS/VS VTAM users), GC30-3008.

IBM 3704 and 3705 Communications Controllers, Emulation Program, Generation and Utilities, Guide and Reference Manual, GC30-3002.

Contents

Figures

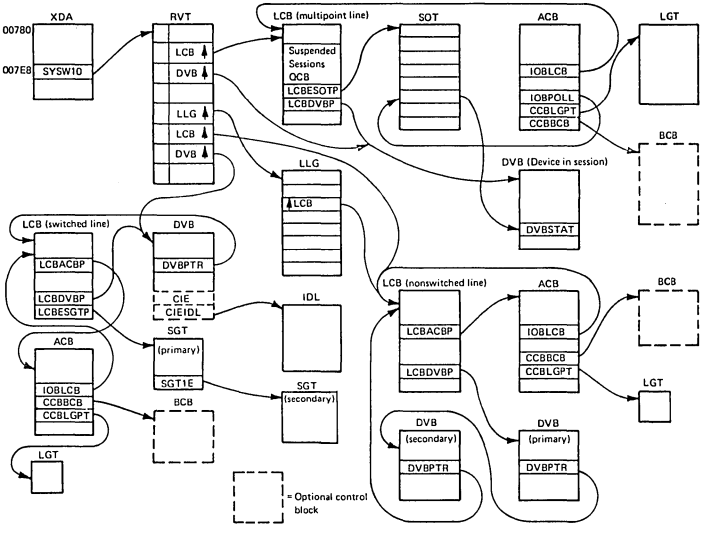

Figure 1. NCP Control Block Relationships for BSC/SS Lines.

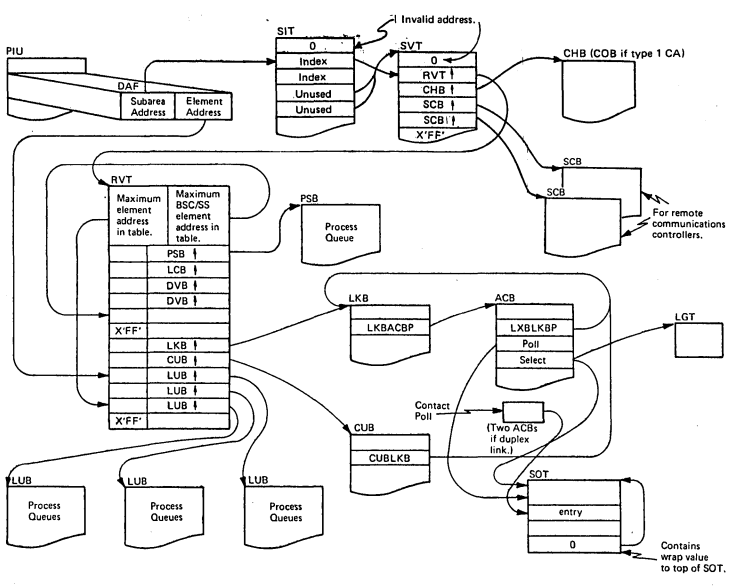

Figure 2. NCP# Control Block Relationships for SDLC Links.

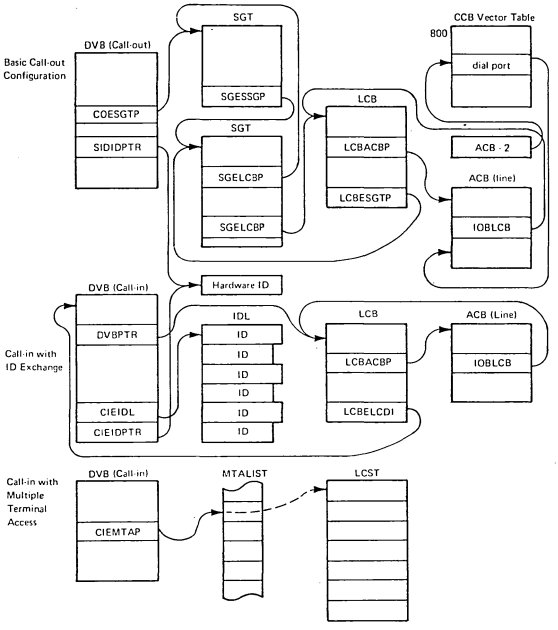

Figure 3. NCP Control Block Relationships for Switched BSC/SS Lines.

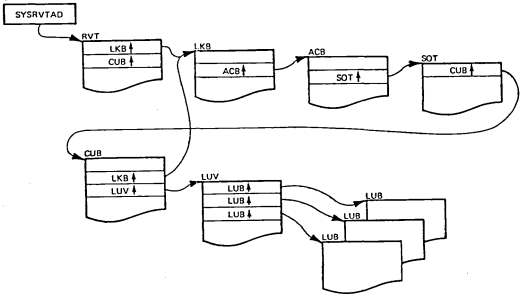

Figure 4. NCP Control Block Relationships for Switched SDLC Links

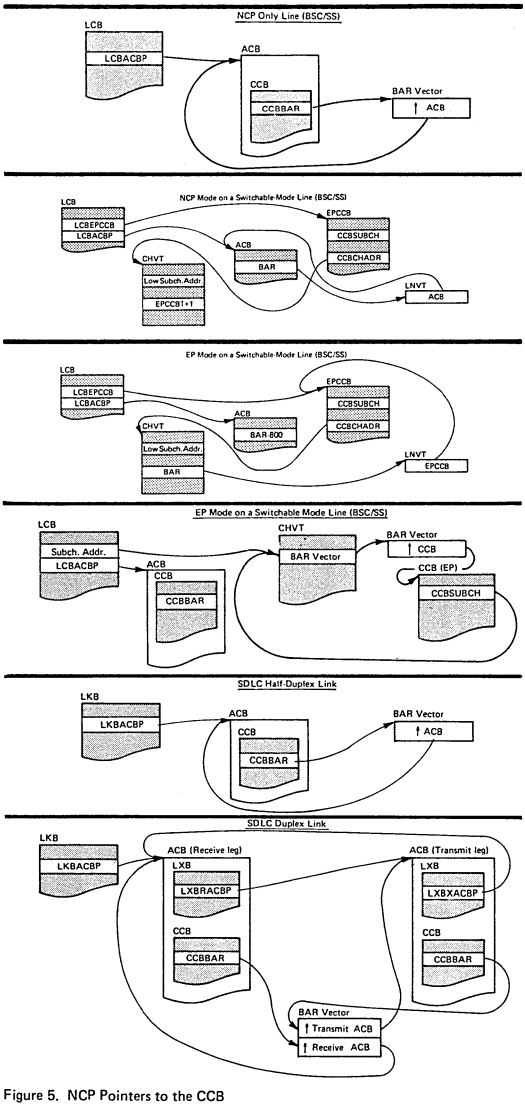

Figure 5. NCP Pointers to the CCB

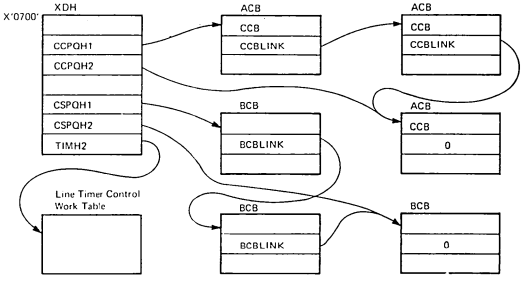

Figure 6. NCP Halfword Direct Addressable Pointers

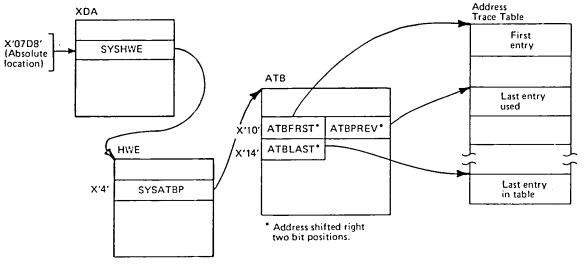

Figure 7. Locating the NCP Address Trace Table

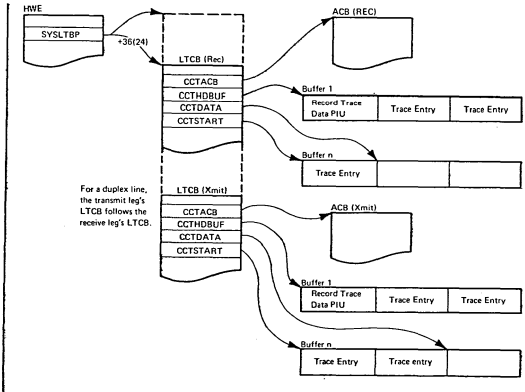

Figure 8. Control Block Relationships for NCP Line Trace

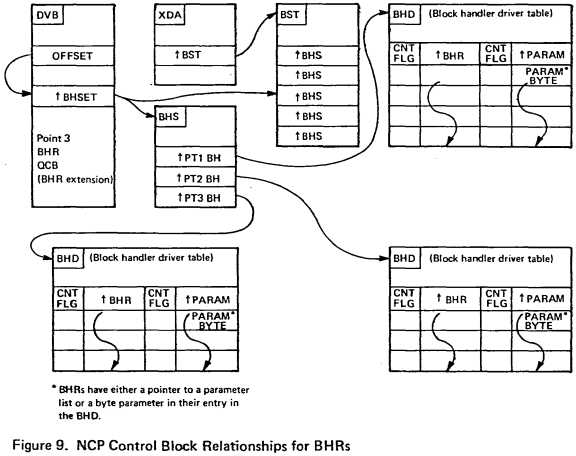

Figure 9. NCP Control Block Relationships for BHRs

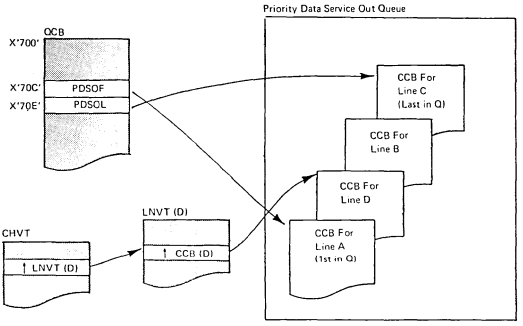

Figure 10. EP Control Block Relationships - Type 2 Scanner

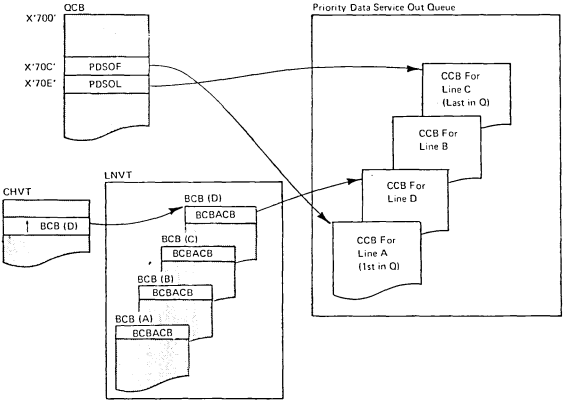

Figure 11. EP Control Block Relationships - Type 1 Scanner

Section 2: Data Area Layouts

The following conventions are used in this section:

- Various versions of the network control program are referred to in the following manner:

  NCP1 – Network Control Program/OS, Version 1 (for OS/MFT and OS/MVT TCAM users)
  NCP2 – Network Control Program/VS, Version 2 (for OS/VS TCAM users)
  NCP# – Network Control Program/VS, (for OS/VS and DOS/VS VTAM users, latest version)
  NCP – All versions of the network control program.

  If a field or bit is not used by all versions of the NCP, the version or versions that use it are shown in parentheses after the field or bit description. For versions not listed, the field or bit is unused.
- The displacement of each field from the beginning is given in both decimal and hexadecimal notation (hexadecimal in parentheses). The displacements in the direct addressable areas (XDA, XDB, and XDH) are given in absolute, hexadecimal notation since these are always in a fixed location of storage.
- If a single field has dual uses with different labels according to the use, the displacement is listed only once, and a broken line followed by the word "or" is inserted between the different labels.
- The contents of some fields are designated as shifted addresses. This means that in 3705 configurations larger than 64K, the storage address is shifted right two bit positions before being placed in the data area.

  Shifted addresses are always in field with a defined length of two bytes. If the controller has less than 64K bytes of storage, the address is not shifted.
- Pointers or addresses contained in fields with a defined length of four bytes occupy the last 18 bits of the field. (Only the last 16 bits are significant if controller storage is less than 64K.) Often byte 0 and the first six bits of byte 1 of these fields are used for other purposes, such as for flags. In cases such as these, the four-byte field is shown as follows:

8(8) XYZISKEP Task entry point (last 18 bits)		
XYZMCBAD Major control block displacement.	9(9) XYZSCHED Task dispatching priority.	

- Labels shown in parentheses are equated in NCP and EP code to the defined label for a field. Equated labels are most frequently used in the direct addressable areas.
- One field in every queue control block (QCB) is labeled "major control block displacement". This field contains the offset to the beginning of this QCB from the beginning of the control block that contains the QCB. For example, the DVIMCBD field contains the displacement from the beginning of the device base control block (DVB) to the beginning of the device input QCB.
- Bit patterns or hex values within a field are defined in a byte expansion table following the formatted data area. The bytes within a field are numbered from zero origin. For example, if the first byte in a two-byte field has a unique definition, it is referred to as Byte 0.
- Bits in the byte expansions that are not identified are reserved.

ADAPTER CONTROL BLOCK

ACB (BSC/SS)

Program: NCP

Size in bytes: 90(5A) for NCP1; 92(5C) for NCP2, NCP#.

Created by: NCP generation.

Pointer to ACB: LCBACBP field in LCB, or ACB vector. The ACB vector is located by doubling the line address, then adding X'800'.

Function: Contains line control information and the status of I/O operations for BSC/SS lines.

	-3(-3) Retry count for dial-out.	-2(-2) Address of dial-out line for auto call
0(0)	Input/Output Block (IOB)	
36(24)	Character Control Block (CCB)	

Program: NCP#

Size in bytes: 92(5C)

Created by: NCP generation.

Pointer to ACB: LKBACBP field in LKB. If it is a duplex link, LKBACBP points to the receive leg ACB, and LXBXACBP in the receive leg's ACB points to the transmit leg's ACB. The ACB vector (or BAR vector) is located by doubling the line address, then adding X'800'.

Function: Contains line control information and the status of I/O operations for SDLC links.

	-3(-3) Dial retry count.	-2(-2) BAR address for dial-out line.
0(0)	Link XIO Block (LXB)	
36(24)	Character Control Block (CCB)	

Program: NCP

Size in bytes: 32(20)

Created by: NCP generation.

Pointer to ATB: SYSATBP field in HWE.

Function: Governs the operation of the address trace function executing in level 1.

<table>
<tr><td colspan="4">0(0)
ATBPRMS
Addresses of trace variables (16 bytes).
Parameter 1</td></tr>
<tr><td colspan="4">4(4)
Parameter 2</td></tr>
<tr><td colspan="4">8(8)
Parameter 3</td></tr>
<tr><td colspan="4">12(C)
Parameter 4</td></tr>
<tr><td colspan="2">16(10)
ATBFRST
Address of first entry in trace table (CXTATPF). (Shifted address.)</td><td colspan="2">18(12)
ATBPREV
Address of last entry used in trace table (CXTATPL). (Shifted address.)</td></tr>
<tr><td colspan="2">20(14)
ATBLAST
Address of last entry in trace table. (Shifted address.)</td><td colspan="2">22(16)
ATBCNTR
Number of interrupts processed.</td></tr>
<tr><td>24(18)
ATBPRCT
No. of variables in each trace entry.</td><td>25(19)
ATBCTL
Address trace control byte.</td><td>26(1A)
ATBLVLS*
Program levels to be traced.</td><td>27(1B)
Reserved</td></tr>
<tr><td colspan="2">28(1C)
ATBIN
Prototype input instruction.</td><td colspan="2">30(1E)
ATBBR
Prototype branch instruction.</td></tr>
</table>

*Indicates a byte expansion follows.

Byte Expansions

Offset/Field Name	Bit Pattern/ Hex Value	Contents
26(1A) ATBLVLS		Program levels to be traced.
	X'80'	Level 2.
	X'40'	Level 3.
	X'20'	Level 4.
	X'10'	Level 5.

Program: NCP, EP

Size in bytes: 16(10)

Created By: NCP and EP generation.

Pointer: CCBBCB field in CCB(NCP) or CYACHEND field in CHVT(EP).

Function: Contains control information for the type 1 scanner. One BCB is created for each line connected to a type 1 scanner.

0(0) BCBACB ACB address (NCP) or CCB address (EP).		2(2) BCBLINK Pointer to next BCB.	
4(4) BCBL2 Bit service routine address.		6(6) BCBSCF Sec. control field.	7(7) BCBPDF Parallel data fld.
8(8) BCBVCT High byte of PCF vector table addr.	9(9) BCBLCPCF* LCD and PCF	10(A) BCBSDF Serial data field (10 bits, left justified).	
12(C) BCBMASK* Transmit/receive mask		14(E) BCBSYNC (BSC) Sync character. - - - - - - BCBBMASK* (SS) Transmit break mask.	15(F) BCBSHIFT Start-stop shift count.

*Indicates a byte expansion follows.

Byte Expansions

Offset/Field Name	Bit Pattern/ Hex Value	Contents
9(9) BCBLCPCF		LCD and PCF.
		LCD field (bits 0-2).
	100	Start-stop.
	101	BSC.
	110	Dial.
	011	SDLC
	111	Feedback check
	. . .x xxx .	PCF (See ICW for PCF expansion.)
	x	PCF change bit: 1 = same PCF 0 = new PCF

Offset/Field Name	Bit Pattern/ Hex Value	Contents
12(C) BCBMASK		Transmit/receive mask.
	X'0100'	SDLC
	X'0100'	BSC EBCDIC.
	X'0100'	BSC USASCII.
	X'00C0'	Start-stop 9/6.
	X'0060'	Start-stop 8/5.
	X'0080'	Start-stop 9/7.
	X'0180'	Start-stop 10/7.
	X'0100'	Start-stop 10/8.
	X'0300'	Start-stop 11/8.
14(E) BCBBMASK		Transmit break mask. (SS)
	X'10'	Start-stop 8/5.
	X'20'	Start-stop 9/6.
	X'20'	Start-stop 9/7.
	X'40'	Start-stop 10/7.
	X'40'	Start-stop 10/8.
	X'7E'	SDLC Flag mask
	X'80'	Start-stop 11/8.
15(F) BCBSHIFT		Start-stop shift count
	0...	No stop-bit error.
	1...	Stop-bit error encountered (SS).
	.0..	Character service not requested.
	.1..	Character service requested.
	..0.	No character overrun/underrun.
	..1.	Character overrun/underrun occurred.
	...0	No modem error.
	...1	Modem error encountered (DSR, CTS, TTY).
	.... 0...	Carrier detect lead not up.
	.... 1...	Carrier detect lead up (required if receiving).
	.... .0..	No frame detection.
	.... ..0.	Store data character.
	.... ..1.	Do not store data character.
	0	Character is not a pad.
	1	Do not send start bit (SS).
		SDLC stop shift count
	xxx.	Ones counter
	...x	Last line state 1 = Mark 0 = Space
	.... x...	NRZI control 1 = NRZI 0 = Not NRZI
	xx	Reserved — Character bits 00 = SDLC 8 bit

Program: NCP

Size in bytes: 20(14) control bytes plus BTU

Located in: Dynamic buffers.

Created by: Built by channel IOCS when a block is received from the host (NCP1, NCP2). Built dynamically by internal routines (NCP#).

Function: To request work.

Buffer Prefix

0(0) BCBUFCHN Buffer prefix chain field. (Shifted address.)	2(2) BCOFFSET Buffer prefix data offset field.	3(3) BCDATCNT Buffer prefix data count field.

Event Control Block

4(4) BCUSTAT* Block status flags.	5(5) BCUESTAT* Event status flags.	6(6) BCUECHN ECB chain pointer.
8(8) BCUECHN (BCUBKLNG) Set time interval, as specified by SETIME macro. - - - - - - - - - - - - - - or BCUTCNT BCU text count.		10(A) BCUWQCB Address of waiting task's input QCB.

Work Area

12(C) BCURVTE Address of RVT entry (last 18 bits). - - - - - - - - - - - - - - - -		
BCUREDS Record descriptor.	BCUFLAGS* Critical text flags to channel output.	
16(10) BCUTDSP Get byte/put byte displacement value.		18(12) BCUSSP Subtask sequence pointer for suspended sessions.
20(14) See "Basic Transmission Unit (BTU)" for format. (Variable in length)		

*Indicates a byte expansion follows.

Byte Expansions

Offset/Field Name	Bit Pattern/ Hex Value	Contents
4(4) BCUSTAT		Block status flags.
	1	Block enqueued.
	.1	Buffers in block are counted.
5(5) BCUESTAT		Event status flags.
	1	Event is satisfied.
	.1	Task is to be dispatched.
13(D) BCUFLAGS		Critical text flags to channel output.
	1	Clear data in release blocks.
	.1	Replace-session-initiation-information restart mode.
	. .1	Check mode for replace-session-initiation-information.

Program: NCP

Size in bytes: 4(4)

Located in: The beginning of each buffer.

Created by: Any routine that uses the LEASE macro to get a buffer.

Pointer to BH: Variable.

Function: Chains buffers in a BCU and points to the beginning of the text data within a single buffer.

0(0) BHBUFCHN* Pointer to next buffer in this chain. (Shifted address).	2(2) BHOFFSET* Offset to beginning of text in this buffer.	3(3) BHDATCNT* Text data count (for this buffer only).

*See the block control unit (BCU) for labels used in the first buffer of a BCU.

Program: NCP

Size in bytes: 8(8) per entry; total size of table is variable.

Created by: NCP generation.

Pointer to BHD: BHS

Function: Defines the block handling routines that are to be executed for a particular block handler.

Entry Format

0(0) BHDRTNP Pointer to block handling routine (last 18 bits).		
BHDC1* Entry ctl byte 1.		
4(4) BHDPARMP Pointer to parameter list (last 18 bits).		
BHDC2* Entry ctl byte 2		7(7) BHDPARMB* Byte parameter

*Indicates a byte expansion follows.

Byte Expansions

Offset/Field Name	Bit Pattern/ Hex Value	Contents
0(0) BHDC1		Entry control byte 1.
	1... .... .1.. ....1	End of table (last entry). User BHR. Receive control if command is in error.
4(4) BHDC2		Entry control byte 2.
	1... .... .1.. .... ..1. .... 1... .... .1..	Receive control for Read. Receive control for Invite. Receive control for Write. Receive control for Disconnect. Receive control in terminator-subtask for Read I/O.
7(7) BHDPARMB		Byte parameter (for date/time).
	1... .... .1.. .... ..1. ....1 .... 1... .... .1.. .... ..1.	Date desired. Calendar form of date desired. Julian format of date desired. Gregorian format 1 of date desired. Gregorian format 2 of date desired. Time desired. Date/time stamp first block of message.

Program: NCP

Size in bytes: 24(18)

Located in: DVB

Created by: NCP generation.

Pointer to BHR: DVBBHRO field in DVB.

Function: Associates block handler routines with a device.

0(0)** BHRBHST Pointer to BHS (last 18 bits).	
BHRCTL* BHR control flags.	

Point 3 QCB (BHRBH3Q)

(See QCB for Input Queues for all bit definitions.)

4(4)** BH31ECB Pointer to first BCU queued. (Shifted address.)		6(6)** BH3LECB Pointer to last BCU queued. (Shifted address.)
8(8)** BH3STAT Task and queue status.	9(9)** BH3PRKEY Protection key.	10(A)** BH3LINK Pointer to next QCB in chain. (Shifted address.)
12(C)** BH3TSKEP Task entry point (last 18 bits).		
BH3MCBD Major control block displacement.	13(D) BH3SCHED Task dispatching priority.	
16(10)** BH3SAVE Address of save area pushdown list. (Shifted address.)		18(12)** BH3LUNK Pointer to previous QCB on the queue. (Shifted address.)
20(14)** BH3BHSET BH set (or BHR) address (last 18 bits).		
BH3BHRST BHR status bits.	21(15) BH3BHSET BHR scheduling bits.	

*Indicates a byte expansion follows.
**Actual position depends upon other extensions to DVB.

Offset/Field Name	Bit Pattern/ Hex Value	Contents
0(0) BHRCTL		BHR control flags.
	1	Execute BHR — If a BHR was specified as dynamic, specified initially as inactive, or deactivated by operator control, this bit will be off.
	.1	Point 1 - specifies point 1 BHR execution.
	. .1	Point 2 - specifies point 2 BHR execution.
	. . .1	Point 3 - specifies point 3 BHR execution.
	. . . . 1 . . .	Point 3 - Block Handler Routine queue control block exists for device. This QCB is created by defining PT3EXEC=YES or BHEXEC=ALL. For dynamic block handlers that have a point 3, there must be a point 3 BHRQCB.

Program: NCP

Size in bytes: 12(C)

Created by: NCP generation.

Pointer to BHS: BSTBHSPT field in BST.

Function: Points to the block handlers that are to be executed for the block handler set.

0(0)	BHSP1 Pointer to point 1 block handler driver table (BHD).
4(4)	BHSP2 Pointer to point 2 BHD.
8(8)	BHSP3 Pointer to point 3 BHD.

Program: NCP

Size in bytes: 4 bytes per entry; table can contain up to 256 entries.

Created by: NCP generation.

Pointer to BST: SYSBST field in XDA.

Function: Points to block handler sets (one entry per BHS).

0(0) BSTBHSPT Address of BHS (last 18 bits). (For the first entry, bytes 1-3 contain zeros.)	
BSTCTL* BHR control flags. (For the first entry, this byte contains the count of BH set pointers in the table.)	

*Indicates a byte expansion follows.

Byte Expansions

Offset/Field Name	Bit Pattern/ Hex Value	Contents
0(0) BSTCTL		BHR control flags.
	1	Execute.
	.1	Point 1.
	. . 1	Point 2.
	. . . 1	Point 3.

Program: NCP#

Size in bytes: PIU + 6 bytes

Function: This is the SDLC transmission block

SDLC Line Control

0(0) Flag*	1(1) Address of secondary station.	2(2) Control*

PIU

3(3) Path Information Unit (See PIU 0-1-2 for description.)

SDLC Line Control

n Block Check Character (BCC) (2 bytes)	n+2 Flag* Same as 0(0).

*Indicates byte expansion follows.

Offset/Field Name	Bit Pattern/ Hex Value	Function
0(0) Flag	0111 1110	Indicates beginning or end of BLU.
2(2)	Control "I" Format	
	xxx	Receive count sequence.
	. . .x	Poll/final bit.
	. . . . xxx.	Send sequence count.
	x	0=Information transfer BLU.
	"S" Format	
	xxx	Receive sequence count.
	. . .x	Poll/final bit.
	. . . . xx. .	00=Receive ready (RR) 01=Receive not ready (RNR) 10=Reject
	01	Supervisory BLU
	"NS" Format	
	xxx . xx . .	Non sequenced command or response
	. . . .x	Poll/final bit
	11	Nonsequenced format

Note: See Section 5 for descriptions of SDLC commands and responses.

Program: NCP

Size in bytes: 14(E) control bytes + variable length text.

Located in: BCU

Created by: The host access method (NCP1, NCP2) or an internal NCP routine (NCP#).

Pointer to BTU: None. The starting byte is at displacement 20(14) into the BCU.

Function: Contains information for either a request for I/O or for a control operation; or a response for the same.

20(14)** BCUSID (BCHSID) Source name.		22(16) BCUDID (BCHDID) Destination name (resource ID).	
24(18) BCUSEQ (BCHSEQ) Request tag or sequence number identifying this BTU.		26(1A) BCUSRES (BCHSRES) System response. See Section 7 for responses.	27(1B) BCULRES (BCHLRES) Extended response. Contains status of I/O operation. See Section 7.
28(1C) BCUCMD* (BCHCMD) Command	29(1D) BCUMOD (BCHMOD) Command modifiers. See Section 3 for a list of the BTU commands and their modifiers.	30(1E) BCUSFLAG* (BCHSFLAG) Function flags.	31(1F) BCHBDUF* BTU flags.
32(20) BCUTLEN (BCHTLEN) Text length.		34(22) Text field. (Variable length.)	

*Indicates a byte expansion follows.
**Displacements represent the offset into the BCU.

Byte Expansions

Offset/Field Name	Bit Pattern/ Hex Value	Contents
28(1C) BCUCMD (BCHCMD)		Command. (See Section 3 for descriptions.)
	X'00'	Null.
	X'01'	Read (R).
	X'02'	Write (W).
	X'03'	Online test (T).
	X'04'	Restart (Y). (NCP1, NCP2)
	X'05'	Invite (I).
	X'06'	Contact (C). (Modifier byte must be zero.)
	X'07'	Disconnect (D).
	X'08'	Control (Z).
	X'77'	Unsolicited response.
	Any other	Invalid.
30(1E) BCUSFLAG (BCHSFLAG)		Function flags.
	1	Checkpoint select (control commands) or start of header.
	.1	Header prefix.
	. . 1	Suppress Invite (control commands) or leading graphics.
	. . . 1	First block of message.
	. . . . 1 . . .	Transparent data.
	. . . . . 1 . .	Positive acknowledgement.
	. . . . . 1 .	Negative acknowledgement.
	 1	Alternate acknowledgement.
31(1F) BCHBDUF		BTU flags.
	. . . . . 1 . .	Suppress write response.
	. . . . . 1 .	Selective text return

Program: NCP

Size in bytes: 4(4)

Located in: DVB

Created by: NCP generation.

Pointer to BUE: DVBBUO field in DVB.

Function: Contains control information for devices that can be contacted over a separate line when the current line fails.

0(0) BUEFLAGS* Flag byte.	1(1) BUEPLCBP Primary LCB pointer.

*Indicates a byte expansion follows.

Byte Expansions

Offset/Field Name	Bit Pattern/ Hex Value	Contents
0(0) BUEFLAGS		Flag byte
	1	Service seeking skip when the device is on a multipoint line.
	. . . . .1 . .	Error occurred in dialing out.
	. . . . . .1 .	Invite pending remembrance.
	1	Back up in progress.

CHARACTER CONTROL BLOCK

Program: EP, PEP

Size in bytes: 38(26) for each start-stop line.
44(2C) for each BSC line.

Located: SLVL5

Created by: NCP and EP generation.

Updated by: LCP, ICP.

Pointer to CCB: LNVT

Referenced by: LCP, ICP, CHVT.

Function: Contains current information on the physical operation of a line. One CCB is generated for each line specified.

0(0) CCBDATA (CCBSUB1) Data Buffer 0			
4(4) CCBDATA1 Data Buffer 1.			
8(8) CCBSVLNK Data service queue forward chain pointer.		10(A) CCBSOLNK Status out queue forward chain pointer.	
12(C) CCBSUBCH Multiplexer sub-channel address.	13(D) CCBBTLCD Type 1 LCD for set PCF line use. ***CCBCFLG* Configuration Flags	14(E) CCBSTAT* Final line status byte.	15(F) CCBSENSE* Final line sense byte.
16(10) CCBCMD Current command for CCB. (See Section 6.)	17(11) CCBLRI* Line request information, 5 bits.	18(12)** CCBCSTAT Current status.	19(13)** CCBCSENS Current sense
20(14) CCBCAC* Character address counter.	21(15) CCBSVSTC* Service/status flag byte.	22(16) CCBCLOCK Timer control field.	23(17) CCBTMADR Timeout routine displacement into branch table.
24(18) CCBACADR Autocall address.		26(1A) CCBOPT* CCB option byte 1.	27(1B) CCBOPT2* Option byte 2.

*Indicates that a byte expansion follows.
**For byte expansion of CCBCSTAT, refer to CCBSTAT.
For byte expansion of CCBCSENS, refer to CCBSENSE.
***EP having a type 4 CA and NCP# with PEP.

28(1C) CCBSTMOD* Set mode byte- Output X'46'	29(1D) CCBLCD* Line control definition (LCD) field. (High 4 bits contain line control definer; low 4 bits contain 0.)

Start/Stop Extension

		30(1E) CCBLRC SS longitudinal redundancy check byte.	31(1F) CCBSSC* SS control flags byte.
32(20) (Note 1) CCBPEPFL* PEP flags		34(22) CCBLGT SS line group table pointer.	
CCBSSCX* SS control flags extension			
36(24) CCBL2 Level 2 interrupt address.		38(26) CCBCHADR (Note 2) Channel control block pointer	

*Indicates that a byte expansion follows.

Note 1: CCBPEPFL is a halfword when EP is used having a type 4 CA and NCP#.
Note 2: Used with EP having a type 4 CA and NCP#.

Binary Synchronous Extension

	30(1E) CCBBCC BSC block check characters	
	CCBBCC1 BSC block check character 1.	31(1F) CCBBCC2 BSC block check character 2.
32(20) CCBPEPFL* PEP flags.	34(22) CCBSYN BSC EBCDIC or USASCII Syn character.	35(23) CCBEOT BSC EBCDIC or USASCII EOT character.
36(24) CCBL2 Address of current level 2 character service routine.	38(26) CCBFLGB1* Flag byte 1—status.	39(27) CCBFLGB2* Flag byte 2—terminal type.
40(28) CCBL2A1 Lost data routing.	42(2A) CCBDLCOM CCB address if dual communications feature is installed (2701 emulation only).	

*Indicates a byte expansion follows.

Binary Synchronous Extension
EP having a type 1 CA, and NCP#

	30(1E) CCBBCC BSC block check characters	
	CCBBCC1 BSC block check character 1.	31(1F) CCBBCC2 BSC block check character 2.
32(20) CCBPEPFL* PEP flags. Unused for EP standalone	34(22) CCBSYN BSC EBCDIC or USASCII Syn character.	35(23) CCBEOT BSC EBCDIC or USASCII EOT character.
36(24) CCBL2 Address of current level 2 character service routine.	38(26) CCBFLGB1* Flag byte 1— status.	39(27) CCBFLGB2* Flag byte 2— terminal type.
40(28) CCBL2A1 Lost data routing.	42(2A) CCBDLCOM CCB address if dual communications feature is installed (2701 emulation only).	

*Indicates a byte expansion follows.

Binary Synchronous Extension (type 2 scanner)
EP having a type 4 CA, and NCP#

	30(1E) CCBBCC BSC block check characters	
	CCBBCC1 BSC block check character 1.	31(1F) CCBBCC2 BSC block check character 2.
32(20) CCBPEPFL* PEP flags.	34(22) CCBSYN BSC EBCDIC or USASCII Syn character.	35(23) CCBEOT BSC EBCDIC or USASCII EOT character.
36(24) CCBL2 Address of current level 2 character service routine.	38(26) CCBCHADR Channel control block pointer	
38(26) CCBFLGB1* Flag byte 1— status. / CCBFLGB2* Flag byte 2— terminal type.	40(28) CCBL2A1 Lost data routing.	
42(2A) CCBDLCOM CCB address if dual communications feature is installed (2701 emulation only).		

*Indicates a byte expansion follows.

Station Select Feature Extension (type 2 scanner)
EP having a type 4 CA, and NCP #

46(2E) CCBSADR Poll or select address	47(2F) CCBGADR Group selection address

Binary Synchronous Extension (type 3 scanner)
EP having a type 4 CA, and NCP#

		30(1E) CCBTBUF First extended buffer address	
32(20) CCBPEPFL* PEP flags.		34(22) CCBBBUF Second extended buffer address	
36(24) CCBL2 Address of current level 2 character service routine.		38(26) CCBCHADR Channel control block pointer	
40(28) CCBFLGB1* Flag byte 1—status.	41(29) CCBFLGB2* Flag byte 2—terminal type.	42(2A) CCBBCNT Second buffer count	43(2B) CCBTCNT First buffer count
44(2C) CCBDLCOM CCB address if dual communications feature is installed (2701 emulation only).		46(2E) CCBCAB* Channel adapter flags	47(2F) CCBBUFSZ Buffer size
48(30) CCBIS Index save byte	(Reserved)		

*Indicates a byte expansion follows.

Station Select Feature Extension (Optional)

44(2C) CCBSADR Station selection address and station poll address. These two addresses differ in bit position 2.	45(2D) CCBGADR* Group selection address.

*Indicates that a byte expansion follows.

Byte Expansions

Offset/Field Name	Bit Pattern/ Hex Value	Contents
14(E) CCBSTAT		Final line status byte.
	X'00'	Reset status byte.
	X'01'	Set UE.
	X'02'	Set UC.
	X'04'	Set DE.
	X'08'	Set CE.
	X'0C'	Set CE, DE.
	X'0D'	Set CE, DE, UE.
	X'0E'	Set CE, DE, UC.
	X'10'	Set CU busy.
	X'20'	Set control unit end.
	X'40'	Set SM.
	X'4C'	Set CE, DE, SM.
	X'80'	Set attention.
15(F) CCBSENSE		Final line sense byte.
	X'00'	Reset sense byte.
	X'01'	Time-out
	X'02'	Set lost data.
	X'04'	Set overrun.
	X'08'	Set data check.
	X'10'	Set equipment check.
	X'20'	Set bus out parity check.
	X'40'	Set intervention required.
	X'80'	Set command reject.
17(11) CCBLRI		Line request information.
	1...	Set interface disconnect flag.
	.... 1...	Set data end flag.
	.... .yxx	y=buffer (0 or 1) xx=number of bytes requested from or presented to the channel.
20(14) CCBCAC		Character address counter.
	X'07'	Reset CAC.
	.... 1...	Set BSC inhibit store flag.
21(15) CCBSVSTC		Service/Status flag byte.
	X'88'	Set data service (buffer 0) + data end.
	X'48'	Set data service (buffer 1) + data end.
	X'C0'	Set SV1 and SV0 bits.

Offset/Field Name	Bit Pattern/ Hex Value	Contents
26(1A) CCBOPT		CCB option byte 1.
	1...	Auto call option installed.
	.1..	Long disable time-out.
	..x.	Dualcom interface A=0 B=1(BSC).
	..1.	Not unit exception on EOT(IBM SS).
	...1	Ring option installed.
	.... 1...	Switched line installed.
	.... .x..	Duplex line installed; 0=half, 1=full.
	11	Type 2 scanner highest interrupt priority.
27(1B) CCBOPT2		CCB option byte 2.
	1...	Channel decode IBM type 1 and type 2 EOB.
	.1..	Trace active for this line.
	..1.	Channel decode IBM type 3 ETX.
	...1	2702 or 2703.
	.... 1...	SS no DCD security monitor.
	.... .1..	World Trade telegraph.
	.... ..1.	Not long line quiet time-out (25.6 seconds).
	1	IBM modem flag (option 1, SS only).
28(1C) CCBSTMOD		Set-mode byte, Output X'46'.
	1...	Type one scanner low bit service priority.
	.1..	Diagnostic Wrap mode.
	..1.	Data terminal ready.
	...1	Binary sync clock.
	.... 1...	External (data set) clocking.
	.... .1..	Data rate select.
	11	Oscillator select.
29(1D) CCBLCD		Line control definition (LCD).
	0000	SS 9/6 (1 start, 6 data, and 2 stop bits).
	0010	SS 8/5 (TTY 1 - 83B3, 115A).
	0011	Autocall LCD.
	0100	SS 9/7 (IBM type 1).
	0101	SS 10/7.
	0110	SS 10/8 (2848).
	0111	SS 11/8 (TTY2 - TWX models 33/35).
	1100	BSC EBCDIC.
	1101	BSC USASCII.
	1111	Feedback check.

Offset/Field Name	Bit Pattern/ Hex Value	Contents
31(1F) CCBSSC		Start-stop control flags byte.
	000	TTY2 type line.
	001	2848 type line.
	010	TTY1 type line.
	100	IBM type 1 line.
	110	IBM type 2 line.
	. . . 1	Bypass LRC (IBM type 1 and 2); not upshift (TTY 1 and 2).
	. . . . 1 . . .	Not immediate end (no line quiet pad check).
	. . . . . 1 . .	Lower case remember.
	. . . . . 1 .	Not text in (IBM type 1 and 2); not Figs H (TTY2).
	 1	Not text out (IBM type 1 and 2); not first character (2848 and TTY).
32(20) CCBSSCX (SS)		Start-stop control flags extension.
	 1	Half duplex link on which break is allowed.
32(20) (BSC) CCBPEPFL		PEP Flags.
	Byte 0	Reserved.
33(21) (SS)	Byte 1	
	x	0=NCP ACB. 1=EP CCB.
38(26) CCBFLGB1		CCB flag byte 1-status.
	1	Channel priority.
	. 1	EIB mode.
	. . 1	Not new sync.
	. . . 1	Interrupt mode.
	. . . . 1 . . .	EIB data check.
	. . . . . 1 . .	EIB overrun.
	. . . . . 1 .	Code B selected.
	 1	ITB mode.
39(27) CCBFLGB2		CCB flag byte 2-terminal type.
	1	Dualcom installed.
	. 1	Station select installed.
	. . 1	ASCII transparent.
	. . . . 1 . . .	Transparent mode, wait for second write.
	. . . . . 1 . .	Second write accepted.
	. . . . . 1 .	Multipoint address remember flag.
	 1	No trailing pad check.
45(2D) CCBGADR		Group selection address.
	. . 1	Multipoint address difference bit.
46(2E) CCBCAB	. . . . x . . .	Sync monitor latch 1=Syncs detected in inbound CA transfer. 0=Non-sync character detected in inbound data.
	. . . . . 1 . .	DLE remember latch
	. . . . . 1 .	ASCII monitor control latch.
	 1	EBCDIC monitor control latch.

CHARACTER CONTROL BLOCK (DUMMY)

CCB
(EP, PEP)

Program: EP, NCP2, NCP3

Size in bytes: 10 (0A)

Located: SLVL5

Created by: NCP and EP generation.

Updated by: ICP.

Pointer to Dummy CCB: CHVT (Pointer has low order bit on).

Referenced by: ICP, CHVT.

Function: Used to handle sense, test I/O and I/O NOP to a subchannel within the high-low range of subchannel addresses, but to which no line has been assigned.

8(8) CCBSVLNK Data service queue forward chain pointer.		10(A) CCBSOLNK Status out queue forward chain pointer.	
12(C) CCBSUBCH Multiplexer sub-channel address.	13(D) CCBBTLCD Type 1 LCD for set PCF line use.	14(E) CCBSTAT Final line status byte.	15(F) CCBSENSE Final line sense byte.
16(10) CCBCMD Current command for CCB (See section 6.)	17(11) CCBLRI Line request information.		

CHARACTER CONTROL BLOCK (Line Test)

CCB
(EP,PEP)

Program: EP,PEP

Size in bytes: 38(26) for each start-stop line.
44(2C) for each BSC line.

Located: SLVL5

Created by: NCP and EP generation.

Updated by: LCP, ICP.

Pointer to CCB: LNVT

Referenced by: LCP, ICP, CHVT.

Function: Contains current information on the physical operation of a line. One CCB is generated for each line specified.

0(0) CCBDATA Receive Data Buffer			
4(4) CCBTLINK Return Link Address Save Area		6(6) CCBTBADR Transmit Buffer Address	
8(8) CCBSVLNK Data service queue forward chain pointer.		10(A) CCBSOLNK Status out queue forward chain pointer.	
12(C) CCBSUBCH Multiplexer sub-channel address.	13(D) CCBBTLCD Type 1 LCD for set PCF line use.	14(E) CCBSTAT* Final line status byte.	15(F) CCBSENSE* Final line sense byte.
16(10) CCBCMD Current command for CCB. (See Section 6.)	17(11) CCBLECS* Line Error Check.	18(12)** CCBCSTAT Current status.	19(13)** CCBCSENS Current sense
20(14) CCBCAC Buffer Index.	21(15) CCBTEST Active Test Function	22(16) CCBCLOCK Timer control field.	23(17) CCBTMADR Timeout routine displacement into branch table.
24(18) CCBACADR Autocall address.		26(1A) CCBOPT* CCB option byte 1.	27(1B) CCBOPT2* Option byte 2.

*Indicates that a byte expansion follows.
**For byte expansion of CCBCSTAT, refer to CCBSTAT.
For byte expansion of CCBCSENS, refer to CCBSENSE.

28(1C) CCBSTMOD* Set mode byte—Output X'46'	29(1D) CCBLCD* Line control definition (LCD) field. (High 4 bits contain line control definer; low 4 bits contain 0.)

Start/Stop Extension

		30(1E) CCBLRC SS longitudinal redundancy check byte.	31(1F) CCBSSC* SS control flags byte.
32(20) CCBSSCX* SS control flags extension.	33(21) CCBPEPFL* PEP flags	34(22) CCBLGT SS line group table pointer.	
36(24) CCBL2 Level 2 interrupt address.			

Binary Synchronous Extension

	30(1E) CCBBCC BSC block check characters CCBBCC1 BSC block check character 1.	31(1F) CCBBCC2 BSC block check character 2.
32(20) CCBPEPFL* PEP flags.	34(22) CCBSYN BSC EBCDIC or USASCII Syn character.	35(23) CCBEOT BSC EBCDIC or USASCII EOT character.
36(24) CCBL2 Address of current level 2 character service routine.	38(26) CCBFLGB1* Flag byte 1—status.	39(27) CCBFLGB2* Flag byte 2—terminal type.
40(28) CCBL2A1 Lost data routing.	42(2A) CCBDLCOM CCB address if dual communications feature is installed (2701 emulation only).	

*Indicates a byte expansion follows.

Station Select Feature Extension (Optional)

44(2C) CCBSADR Station selection address and station poll address. These two addresses differ in bit position 2.	45(2D) CCBGADR* Group selection address.

*Indicates that a byte expansion follows.

Byte Expansions

Offset/Field Name	Bit Pattern/ Hex Value	Contents
14(E) CCBSTAT		Final line status byte.
	X'00'	Reset status byte.
	X'01'	Set UE.
	X'02'	Set UC.
	X'04'	Set DE.
	X'08'	Set CE.
	X'0C'	Set CE, DE.
	X'0D'	Set CE, DE, UE.
	X'0E'	Set CE, DE, UC.
	X'10'	Set CU busy.
	X'20'	Set control unit end.
	X'40'	Set SM.
	X'4C'	Set CE, DE, SM.
	X'80'	Set attention.
15(F) CCBSENSE		Final line sense byte.
	X'00'	Reset sense byte.
	X'01'	Time-out
	X'02'	Set lost data.
	X'04'	Set overrun.
	X'08'	Set data check.
	X'10'	Set equipment check.
	X'20'	Set bus out parity check.
	X'40'	Set intervention required.
	X'80'	Set command reject.
17(11) CCBLECS		
	1	Reserved for interface disconnect
	.1	Data check
	. . 1	Transmit mode
	. . . 1	Receive mode
	. . . . 1 . . .	Normal compare set
	. . . . . 1 . .	Swap 3 set
	. . . . . 1 .	Swap 2 set
	 1	Swap 1 set
21(15) CCBSVSTC		Service/Status flag byte.
	X'88'	Set data service (buffer 0) + data end.
	X'48'	Set data service (buffer 1) + data end.
	X'C0'	Set SV1 and SV0 bits.

Offset/Field Name	Bit Pattern/ Hex Value	Contents
26(1A) CCBOPT		CCB option byte 1.
	1...	Auto call option installed.
	.1..	Long disable time-out.
	..x.	Dualcom interface A=0 B=1 (BSC).
	..1.	Not unit exception on EOT(IBM SS).
	...1	Ring option installed.
	.... 1...	Switched line installed.
	.... .x..	Duplex line installed; 0=half, 1=full.
	11	Type 2 scanner highest interrupt priority.
27(1B) CCBOPT2		CCB option byte 2.
	1...	Channel decode IBM type 1 and type 2 EOB.
	.1..	Trace active for this line.
	..1.	Channel decode IBM type 3 ETX.
	...1	2702 or 2703.
	.... 1...	SS no DCD security monitor.
	.... .1..	World Trade telegraph.
	.... ..1.	Not long line quiet time-out (25.6 seconds).
	1	IBM modem flag (option 1, SS only).
28(1C) CCBSTMOD		Set mode byte, Output X'46'.
	1...	Type one scanner low bit service priority.
	.1..	Diagnostic Wrap mode.
	..1.	Data terminal ready.
	...1	Binary sync clock.
	.... 1...	External (data set) clocking.
	.... .1..	Data rate select.
	11	Oscillator select.
29(1D) CCBLCD		Line control definition (LCD).
	0000	SS 9/6 (1 start, 6 data, and 2 stop bits).
	0010	SS 8/5 (TTY 1 - 83B3, 115A).
	0011	Autocall LCD.
	0100	SS 9/7 (IBM type 1).
	0101	SS 10/7.
	0110	SS 10/8 (2848).
	0111	SS 11/8 (TTY2 - TWX models 33/35).
	1100	BSC EBCDIC.
	1101	BSC USASCII.
	1111	Feedback check.

Offset/Field Name	Bit Pattern/ Hex Value	Contents
31(1F) CCBSSC		Start-stop control flags byte.
	000	TTY2 type line.
	001	2848 type line.
	010	TTY1 type line.
	100	IBM type 1 line.
	110	IBM type 2 line.
	. . . 1	Bypass LRC (IBM type 1 and 2); not upshift (TTY 1 and 2).
	. . . . 1 . . .	Not immediate end (no line quiet pad check).
	. . . . . 1 . .	Lower case remember.
	. . . . . 1 .	Not text in (IBM type 1 and 2); not Figs H (TTY2).
	 1	Not text out (IBM type 1 and 2); not first character (2848 and TTY).
32(20) CCBSSCX (SS)		Start-stop control flags extension.
	 1	Half duplex link on which break is allowed.
32(20) (BSC) CCBPEPFL		PEP Flags.
	Byte 0	Reserved.
33(21) (SS)		
	Byte 1	
	x	0=NCP ACB. 1=EP CCB.
38(26) CCBFLGB1		CCB flag byte 1-status.
	1	Channel priority.
	. 1	EIB mode.
	. . 1	Not new sync.
	. . . 1	Interrupt mode.
	. . . . 1 . . .	EIB data check.
	. . . . . 1 . .	EIB overrun.
	. . . . . 1 .	Code B selected.
	 1	ITB mode.
39(27) CCBFLGB2		CCB flag byte 2-terminal type.
	1	Dualcom installed.
	. 1	Station select installed.
	. . 1	ASCII transparent.
	. . . . 1 . . .	Transparent mode, wait for second write.
	. . . . . 1 . .	Second write accepted.
	. . . . . 1 .	Multipoint address remember flag.
	 1	No trailing pad check.
45(2D) CCBGADR		Group selection address.
	. . 1	Multipoint address difference bit.

CHARACTER CONTROL BLOCK

CCB
(NCP)

Program: NCP

Size in bytes: 56(38)

Created by: NCP generation.

Pointer to CCB: Follows IOB in ACB for BSC/SS lines. Follows LXB in ACB for SDLC lines.

Function: Contains line control information.

36(24) CCBL2 Address of current level 2 character service routine.	38(26) CCBSTATE* Pointer to character service state address table. Initially, CCBSTATE contains the address of the beginning of the state address table. The masks shown in the byte expansion are applied to the low-order byte of CCBSTATE by the character service routines. They change the value of CCBSTATE so that it points to the entry in the state address table that contains the address of the routine to handle the line state indicated.
40(28) CCBTACB or CTBACB Pointer to the next ACB in the timer chain.	42(2A) CCBTWORK or CTBWORK Timer work entry for this ACB.
44(2C) CCBLINK Pointer to next ACB in level 2-3 chain.	46(2E) CCBTIME* Time-out interface. CCBTOCMD Time-out command. CCBTOREM Time-out remembrance.
48(30) CCBBAR Line address, if type 2 scanner. or CCBBCB BCB address, if type 1 scanner.	50(32) CCBBCC CRC check character (BSC). or CCBLRC LRC character (SS). CCBCASE Case history (SS).

*Indicates a byte expansion follows.

52 (34) CCBLGPT Pointer to line group table for group.		54(36) CCBCNTS Character count/buffer count field. CCBCHAR Buffer character count.	CCBCUT Buffer maximum for a receive operation.
56(38) CCBSTAT1* Current operational status of the line.		58(3A) CCBEND1 Line status at completion of a level 2 operation. The level 2 routine moves the status from CCBSTAT1 to CCBEND1 at the end of an operation.	
60(3C) CCBDATA** Address of the data byte being sent or received (last 18 bits).			
CCBEND2 Record descriptor flags moved from CCBSTAT2 at end of a level 2 operation.	CCBNCFL* Flags for control operations between IOB commands.		
64(40) CCBSTART Current buffer address (last 18 bits).			
CCBOFSET At start of a receive operation, set to the offset into the buffer of the first data character (SS/BSC only), after first character is received, set to zero, indicating that data was stored.	CCBFLAGS* General Flags.		
68(44) CCBRXLAT Address of receive translate decode table.		70(46) CCBTXLAT High-order byte of transmit translate decode table address. (The low-order byte of the address is the character to be translated). CCBPASCT Pass counter-number of BLUs sent (SDLC).	71(47) CCBSTAT2 Record descriptor flags. If any bit in this field is on, it indicates that the corresponding character was scanned. or CCBNEXT Buffer for next character to be transmitted. CCBRBLUC* BLU command field received for level 3 (SDLC).
CCBCPCNT Poll cycle count (SDLC).	69(45) CCBCPRAT Contact poll rate (SDLC).		

*Indicates a byte expansion follows.
**Type 3 scanner receive—Address of one character beyond the last character received.
Type 3 scanner transmit—Address of the next buffer in the write chain (zero if none).

72(48) CCBHDBUF Address of first buffer in a block (last 18 bits).			
CCBBUFCT Buffer maximum for a receive operation.	CCBTYPEC* Dial control flags.		
76(4C) CCBL3 Address of next level 3 routine to be executed.		78(4E) CCBERTRY Text error retry limit.	79(4F) CCBFSTSV Save area for current status.
80 (50) CCBSMSDF* Set mode control flags.	81(51) CCBXTPCF Transmit turn around. LCD/PCF.	82(52) CCBCTL* Control flags/line type.	
		CCBRSPON* Control flags.	CCBTYPE* Line type.
84(54) CCBESTAT Expected ending status of the level 2 operation.		86(56) CCBL2REM Save area for CCBL2. (SDLC)	
		CCBICCCT Initial control character count.	87(57) CCBNEGPD BSC negative poll wait timeout or CCBVTABD Vertical tab delay (number of idles sent after a vertical tab; SS only)
88(58) CCBCRTN Number of print positions carriage will return in time it takes to send one idle character (SS only).	89(59) CCBLCNT Length of print line (SS only).	90(5A) CCBLTCRP Number of data positions since last carriage return.	91(5B) CCBNTCRP Net carriage return value.
or CCBAFLD Received secondary station address (SDLC). or CCBXTICH Character position of ITB mode transparent text (BSC only).	or CCBCFLD Received SDLC/BTU command field.	or CCBLNRP Last N(R) processed (SDLC).	or CCBPOLLI Poll interval-maximum poll rate (SDLC)

Byte Expansions

Offset/Field Name	Bit Pattern/ Hex Value	Contents
38(26) CCBSTATE		Pointer to character service state address table.
	State masks used by BSC character service	
	X'00'	Receive not text.
	X'02'	Receive phase.
	X'04'	Receive BCC.
	X'06'	Receive first not text.
	X'08'	Receive end pad.
	X'0A'	Queue received sub-block.
	X'0C'	Receive text.
	X'0E'	Receive intermediate BCC.
	X'10'	Transmit not text.
	X'14'	Transmit BCC.
	X'16'	Transmit syn insertion.
	X'18'	Transmit end pad.
	X'1A'	Transmit initial.
	X'1C'	Transmit text.
	X'1E'	Transmit intermediate BCC.
	X'20'	Receive idle.
	X'22'	Receive enable.
	X'24'	Receive DLE in text.
	X'26'	Receive disconnect.
	X'28'	Receive DLE in not text.
	X'28'	Transmit DLE in not text.
	X'2A'	Receive transparent text.
	X'2C'	Receive first transparent text.
	X'2E'	Receive DLE in transparent text.
	X'30'	Transmit Diagnostic.
	X'32'	Transmit Dial.
	X'34'	Transmit DLE in text.
	X'36'	Transmit syn insert-transparent.
	X'3A'	Transmit transparent text.
	X'3C'	Transmit first transparent text.
	X'3E'	Transmit DLE in transparent text.
	State masks used by start-stop character service	
	X'00'	Receive control.
	X'02'	Receive lost data.
	X'04'	Receive LRC.
	X'06'	Receive response.
	X'0E'	Line turnaround.
	X'10'	Transmit ctl. w/repetition.
	X'12'	Transmit pad.
	X'14'	Transmit LRC.
	X'16'	Transmit reply.
	X'1A'	Transmit ctl. w/address.
	X'1E'	Line turnaround.
	X'24'	Receive first character, MTA.
	X'28'	Receive post sense byte.
	X'2A'	Post the ACB queue.
	X'2C'	Receive line quiet test(1).
	X'2E'	Receive line quiet test(2).
	X'32'	Receive line quiet test(3).
	X'34'	Transmit carriage idles.
	X'36'	Transmit 1030 text idles.
	X'38'	Transmit reset pad flag.
	X'3C'	Transmit sub-block end.
	X'3E'	Transmit break.

Offset/Field Name	Bit Pattern/ Hex Value	Contents
	State masks used by SDLC character service	
	X'00'	RCV idle.
	X'0E'	Shoulder tap time-out.
	X'1E'	Shoulder tap time-out.
	X'20'	RCV idle.
	X'22'	Enable.
	X'26'	Disconnect.
	X'2E'	Shoulder tap time-out.
	X'3E'	Shoulder tap time-out.
	State bits and definitions	
	X'20'	DLE mask. 1=DLE encountered. 0=No DLE encountered
	X'10'	Transmit/Receive mask. 1=Transmit. 0=Receive.
	X'04'	CTL or text out test mask. 1=SS state is receive reply. 0=SS state is receive control.
	X'02'	Send EOA mask. 1=Send pad in place of EOA. 0=Send EOA.
	X'01'	First flag mask. 1=First non SYN or DLE. 0=No first non SYN or DLE.
46(2E) CCBTIME	The bits in position 0 of both bytes of CCBTIME are used together for time-out control. When these bits have different values in the two bytes of CCBTIME, a new timer command is present.	Time-out interface.
56(38) CCBSTAT1	Byte 0	Current operational status of line.
		Exceptional ending flags passed between levels 2 and 3.
	1...	Character overrun/underrun.
	.1..	Format error (abnormal line control sequence for a receive operation).
	..1.	Stop bit error (start-stop only). Abort frame (SDLC). Seven ones in a row have been received.
	...1	Data check (VRC, LRC, or CRC error).
	.... 1...	Block overrun occurred (SDLC). Line quiet time-out (SS only).
	.... .1..	Reset command in process.
	.... ..1.	Invalid DLE sequence (BSC only).
	1	Transmit length check. (BSC/SS)
CCBCMPCD	Byte 1	Completion codes indicating how the I/O operation ended. Status masks are the same as those for IOBSTAT+1 (BSC/SS lines) or LXBSTATC (SDLC links).

Offset/Field Name	Bit Pattern/ Hex Value	Contents
61(3D) CCBNCFL	Byte 1	Flags for control operations between IOB commands.
	1...	Command initialization delay required.
	.1..	Special ender procedure when no command is up.
	..1.	Send TTD bit.
	...1	Send WACK. (Bits 4-7 reserved).
65(41) CCBFLAGS		General flags.
	1...	Tab preceded CR/LF (SS). No time-out (BSC). Initial time-out interval (SDLC).
	.x..	Control mode indication. 1=control mode is response to text. 0=control mode if from polling or addressing.
	..1.	Post ACB to the queue after turnaround.
	...1	One character of break signal received (SS). Next event is ITB (BSC).
	.... 1...	Line is in diagnostic mode.
	.... .1..	OLLT active (SDLC)
71(47) CCBRBLUC		Received C Field – BLU SDLC
	RRRP SSSO	I format
	RRRP 0001	S format RR cmd/resp.
	RRRP 0101	S format RNR cmd/resp.
	RRRP 1001	S format REJ cmd/resp.
	1001 0011	NS format SNRM cmd.
	0101 0011	NS format SDRM cmd.
	0001 0111	NS format SIM cmd.
	0111 0011	NS format NSA resp.
	0001 0111	NS format RQI resp.
	0001 1111	NS format ROL resp.
	1001 0111	NS format CMDR resp.
	P=Poll/Final	1= Poll (cmd) Final (resp)
	RRR=N (R)	Recv seq count
	SSS=N (S)	Send seq count
73(49) CCBTYPEC		Dial control flags.
	1...	Switched line.
	.1..	Line has auto dial unit (switched only).
	..1.	Recognize ring indicator lead.
	...1	Line has DC telegraph loop.
	.... x...	1=Generate answer tone after call-in. 0=Answer tone is automatic.
	.... .1..	Not NRZI mode.
80(50) CCBSMSDF		Set mode control flags.
	x...	Service priority (type 1 scanner). 1=low priority. 0=high priority.
	.1..	Diagnostic mode.
	..1.	Data terminal ready bit .
	...x	1=synchronous line. 0=start-stop line.
	.... x...	1=modem clocking. 0=3705 clocking.
	.... .x..	Data rate select bit (World Trade modems). 1=high speed. 0=low speed.
	.... ..1.	Oscillator select bit 1.
	1	Oscillator select bit 2.
82(52) CCBCTL		Control flags/Line type.
	Byte 0	Control flags.
	Control Flag Definitions for Replies	
	1...	Send NAK reply/delay after autodial.
	.1..	Send ACK reply.
	..x.	Alternating ACK bit for BSC (valid only if bit 1 is also on). 1=send ACK1. 0=send ACK0.

Offset/Field Name	Bit Pattern/ Hex Value	Contents
	...1	Last text reply was WACK (BSC). TTD received when ACK outstanding Last reply outstanding (SS).
	.... x...	Expected receive alternate ACK bit (BSC). 1=ACK1 expected reply. 0=ACK0 expected reply.
	Control Flag Definitions for Polling Operations	
		SDLC poll wait 1=wait 0=no wait or
	x...	Service seeking skip bit. 1=Terminate if at end of service order table. 0=Continue service seeking.
	.1..	SDLC transmit leg busy.
	..1.	Service seeking polling, or single poll.
	...1	Service seeking. Orderly link stop. 1=End run when both transmit and receive legs idle. (SDLC)
	.... x...	SDLC receive leg busy. 1=Cannot poll now (primary). (Always on if secondary.) 0=Can poll now.
	x	SDLC poll loop control 1=At end of list no active station found 0=Active station found in list
	Control Flag Definitions for Enable/Dial Operations	
	1...	Abort enable dial.
	.1..	Abort when level 2 processing ends.
	..x.	Duplex enable second pass through under (SDLC). 1=Second pass through enable end. 0=First pass through enable end.
	...1	Send ENQ after ID. (Bits 4-7 reserved).
	Control Flag Definitions for Text Operations	
	1...	Insert data before text. (Bits 1-7 reserved).
	Control Flag Definitions for Multiple Terminal Access	
	1...	MTA retry in process. (Bits 1-3 reserved).
	.... 1...	MTA line enabled.
	.... .xx.	Phase bits: B'00'=Idle. B'01'=Receive text. B'10'=Receive text reply. B'11'=Receive control. Phase bits for SDLC operations: B'00'=No command active. B'01'=SDLC I-format sent or SDLC RR-sent. B'10'=SDLC RNR-sent. B'11'=SDLC NS-command sent. Special phase bits for ID exchange: B'00'=No command active. B'01'=Receive ID phase. B'10'=Receive ID reply. B'11'=Connect and Command Reject.
	.... ..1.	Leading graphics being sent.
	1	Sub-blocking occurred.

Offset/Field Name	Bit Pattern/ Hex Value	Contents
CCBTYPE	Byte 1	Line type
	x	1=Line is on a type 3 scanner. 0=line is not on a type 3 scanner.
	.x	Duplex adapter. 1=Line has 2 line adapter addresses. 0=1 line adapter address.
	. .x	Half duplex ACB or duplex transmit leg ACB. 1=Half duplex leg or duplex transmit leg ACB. 0=Duplex receive leg ACB. or Duplex adapter transmit leg ACB. 1=Transmit leg. 0=Receive leg. or SS (WTTY) strip FIGS/LTRS NCP#. 1=Strip FIGS/LTRS in received text.
	. . .1	Use data set new sync feature (BSC/SDLC). Half duplex link on which break is allowed (SS).
	. . . . x . . .	Line type bit. 1=BSC. 0=start-stop, SDLC (see bit 7).
	. . . . .1 . .	Remote station can receive error message (BSC). Time-out valid reply for negative poll (start-stop).
	. . . . . .x .	Point-to-point contention bit (BSC/SDLC). 1=point-to-point contention secondary station (BSC). 0=point-to-point contention primary station. 1=SDLC secondary station. 0=SDLC primary station. World Trade shift bit (SS). 1=upshift on space character (WTTY only). 0=no upshift on space.
	x	SDLC link bit NCP#. 1=Line type is SDLC (Bit 4=0). 0=Line type is not SDLC. or S/S (WTTY) strip FIGS/LTRS. (NCP2) 1=Strip FIGS/LTRS in received text. 0=Leave FIGS/LTRS in received text.

CLUSTER GENERAL POLL EXTENSION TO DVB — CGP

Program: NCP

Size in bytes: 16(10)

Located in: DVB

Created by: NCP generation.

Pointer to CGP: DVBCLSO field in DVB.

Function: Contains information necessary to reinitiate suspended sessions of general polled devices.

0(0)* CGPRVTE Pointer to RVT entry.		
4(4)* CGPSSC Suspended sessions count.	5(5)* CGPSSS Suspended sessions serviced.	6(6)* (Reserved)

Cluster Suspended Sessions QCB
(See QCB for Work Queues for all bit definitions.)

8(8)* CGP1ECB Pointer to first BCU queued. (Shifted address.)		10(A)* CGPLECB Pointer to last BCU queued. (Shifted address.)
12(C)* CGPSTAT Task and queue status.	13(D)* CGPPRKEY Protection key.	14(E)* CGPLINK Pointer to next QCB in chain. (Shifted address.)

*Actual position depends on other extensions present.

Program: NCP1, NCP2

Size in bytes: 128(80)

Created by: NCP Generation

Pointer to CHB: CHSVH2 field in XDH

Function: Contains the parameters and control fields used by the type 2 channel adapter I/O supervisor.

CHB Prefix

-24(-18) CXCAWQ Channel work QCB. (For format, see Queue Control Block for Work Queues.)
-16(-10) CXCAHQ Channel hold QCB. (For format, see Queue Control Block for Work Queues.)
-8(-8) CXCAECB Event control block for leasing buffers. (For format, see Event Control Block.)

0(0) CHBSTATE* Channel adapter outbound state field.	1(1) CHBTRIG* Channel trigger field.	2(2) (Reserved).	3(3) CHBCASEL* CA select byte-indicates current primary CA.
4(4) CHBXR50 Save area for external register X'50'.		6(6) CHBXR51 Save area for external register X'51'.	
8(8) CHBXR52 Save area for external register X'52'.		10(A) CHBXR53 Save area for external register X'53'.	
12(C) CHBXR54 Save area for external register X'54'.		14(E) CHBXR55 Save area for external register X'55'.	

*Indicates a byte expansion follows.

16(10) CHBXR57 Save area for external register X'57'.	18(12) CHBXR5C Save area for external register X'5C'.	
20(14) CHBIM1SV Save area for input manager's linkage register to CXCACIM1.		
24(18) CHBIM3SV Save area for input manager's linkage register to CXCACIM3.		
28(1C) CHBECBAD Address of ECB for leasing buffers.		
32(20) CHBEQSV Address of the complete BTU to be passed to the system router.		
36(24) CHBEQSVN Address of the last buffer in the BTU to be enqueued.		
40(28) CHBBSVS Address of the first buffer on the save chain.		
44(2C) CHBBSVE Address of the last buffer on the save chain.		
48(30) CHBICFB Address of the first buffer in the CW chain.		
52(34) CHBICPS Pointer to the input CW chain (CIC).	54(36) CHBICFE Address of the first CW on the input CW chain (CIC).	
56(38) CHBICLE Address of the last CW on the input CW chain (CIC).	58(3A) CHBLEXCW Address of last executed CW.	
60(3C) CHBRNBS Number of data bytes in one NCP buffer (shifted left two bits).	62(3E) CHBLBCNT Data count for last inbound buffer used.	
64(40) CHBRCNT Original data count in last CW executed.	66(42) CHBRNBAL NCP generated buffer lease count for inbound data.	67(43) CHBBLC Current buffer lease count (same as CHBRNBAL except during slowdown, when this field equals one).
68(44) CHBCOMSV Save area for linkage register for CXCACOM.		
72(48) CHBHQBS Address of the last outbound BTU given to the channel adapter output initiator.		

76(4C) CHBWQAD Address of the channel work QCB.		
80(50) CHBHQAD Address of the channel hold QCB.		
84(54) CHBOCFB Address of the first buffer on the output CW chain (COC).		
88(58) CHBOCPS Pointer to the output CW chain (COC).	90(5A) CHBOCFE Address of the first CW on the output CW chain (COC).	
92(5C) CHBOCLE Address of the last CW on the output CW chain (COC).	94(5E) CHBWKA Save area.	
96(60) CHBHBS Host buffer size in bytes.	98(62) CHBHBAL Number of host buffers allocated per read list.	99(63) CHBOCR Number of host buffers remaining for use by the output CW chain (COC).
100(64) CHBP1PT Pointer to start of access method pad 0.	102(66) CHBPAD1 Number of bytes in access method pad 0.	103(67) (Reserved).
104(68) CHBP2PT Pointer to start of access method pad 1.	106(6A) CHBPAD2 Number of bytes in access method pad 1.	107(6B) (Reserved).
108(6C) CHBDLAY NCP generated value for attention delay in tenths of a second.	110(6E) CHBATTO First attention time-out interval.	
112(70) CHBATT2 Second attention time-out interval.	114(72) CHBSSICF CA-inoperative flag for level 1 only.	115(73) (Reserved).
116(74) (Reserved).		
120(78) CHBERPSV Save area for channel error recovery procedure.		
124(7C) CHBSCBA Address of secondary channel adapter extension, if present. Zero if not present.		

Control Word Chain Area**

0(0)	CHBCOCWS Variable length area for Out CW chain (COC).
***	CHBCICWS Variable length area for In CW chain (CIC).

**If the secondary channel adapter extension to the CHB is present, this area (Control Word Chain Area) follows the extension.
***Offset depends on length of CHBCOCWS.

Byte Expansions

Offset/Field Name	Bit Pattern/ Hex Value	Contents
0(0) CHBSTATE		Channel adapter outbound state field.
	1	Attention needs to be presented to host.
	.1	Attention delay active.
	. .X	(Reserved).
	. . .1	Allow attention time-out.
	. . . . 1 . . .	Attention has been presented.
	. . . . .x . .	(Reserved).
	. . . . . .1 .	COC is active.
	1	Channel work queue is active.
1(1) CHBTRIG		Channel trigger field.
	1	Next BTU has been rejected because of slowdown.
	.1	Reject the next BTU because of slowdown.
	. .1	Slowdown mode indicator.
	. . .1	Switch-in-progress flag.
	. . . . 1 . . .	Terminate flag.
	. . . . .1 . .	Secondary Read pending flag.
	1	Switch Read pending flag.
3(3) CHBCASEL	X'08' X'00'	Type 2 channel adapter 1. Type 2 channel adapter 2.

Program: NCP#

Size in bytes: 128(80)

Created by: NCP Generation

Pointer to: CHSVH2 field in XDH

Function: Contains the parameters and control fields used by the type 2 and type 3 channel adapter I/O supervisor.

-48(-30) CXCAXHQ PIU exception queue (for format, see QCB for input queues).			
-32(-20) CXCAIQ Channel intermediate QCB (for format, see QCB for work queues).			
-24(-18) CXCAHQ Channel hold QCB (for format, see QCB for work queues).			
-16(-10) CXCAECB Event control block for leasing buffers (for format, see Event Control Block.)			
-8(-8) XXCXTCHB Dump identifier. Characters "XXCXTCHB"			
0(0) CHBCND* Channel condition flags.		2(2) CHBSEL 3(3) CHBCASEL Channel adapter select bit. X'0008' type 2 CA-position 1. X'0000' type 2 CA-position 2.	
4(4) CHBSSICF Channel adapter inoperative flag for level 1 use only.	5(5) Reserved.	6(6) CHBICND* Condition flags on entry.	
8(8) Reserved.		10(A) Reserved.	
12(C) Reserved.		14(E) CHBRSX Next Read Start command expected.	15(F) CHBWSX Next Write Start command expected.
16(10) CHBXR50 Save area for external register X'50'.		18(12) CHBXR51 Save area for external register X'51'.	
20(14) CHBXR52 Save area for external register X'52'.		22(16) CHBXR53 Save area for external register X''53'.	
24(18) CHBXR54 Save area for external register X'54'.		26(1A) CHBXR55I Save area for input from external register X'55'.	
28(1C) CHBXR550 Save area for output to external register X'55'.		30(1E) CHBXR56 Save area for external register X'56'.	

*Indicates a byte expansion follows.

32(20) CHBXR57 Save area for external register X'57'.	34(22) CHBXR5A Save area for external register X'5A'
36(24) CHBXR5C Save area for external register X'5C'.	38(26) Reserved.
40(28) CHBLESV Save area for CXCALEAS.	
44(2C) CHBBCWSV Save area for CXCABCWS.	
48(30) CHBBFXSV Save area for CXCABFIX.	
52(34) CHBIBTUA Address of first buffer of current PIU.	
56(38) CHBIPBF Pointer to last inbound buffer.	
60(3C) CHBIBUF1 Address of first buffer on inbound CW chain.	
64(40) CHBIBUFN Address of last buffer on inbound CW chain.	
68(44) CHBCBTU1 Address of a complete PIU passed to path control.	
72(48) CHBCBTUN Address of last buffer of PIU to be enqueued.	
76(4C) CHBICWA Address of inbound CW area.	79(4E) CHBICW1 Address of first CW on inbound CW chain.
80(50) CHBICWN Address of last CW on inbound CW chain.	82(52) CHBLEXCW Address of last executed CW.
84(54) CHBLBCNT Data count for last inbound buffer.	86(56) CHBRCNT Original data count in last executed CW.
88(58) CHBMLCNT Number of buffers to lease for inbound transfer. 89(59) CHBCLCNT Current buffer lease count.	90(5A) CHBBTUCT Number of PIUs enqueued.
92(5C) CHBSKPCT Number of PIUs to skip for retry.	94(5E) Reserved.
96(60) CHBIQBS Address of last outbound block given to CXCAOUT.	
100(64) CHBOFFST Temporary area for buffer data offset.	102(66) CHBDATCT Temporary area for buffer data count.

104(68) CHBOCW1 Address of first CW on output chain.	106(6A) CHBOCWN Address of last CW on output chain.
108(6C) CHBFHAC System generated host Read buffer size.	110(6E) CHBRHAC Host Read buffer size work area.
112(70) CHBFCCW System generated number of host Read CCWs per channel transfer unit.	114(72) CHBRCCW Number of host Read CCWs per channel transfer unit work area.
116(74) CHBVPAD VTAM Pad size.	118(76) CHBDLAY NCP system generation value for attention delay in tenths of a second.
120(78) CHBHWM Attention delay PIU counter.	122(7A) CHBATT0 First attention time-out interval.
124(7C) Reserved	

Control Word Chain Area**

0(0) CXCAOCWA Variable length area for Out CW chain (COC).
*** CXCAICWA Variable length area for In CW chain (CIC).

**If the secondary channel adapter extension to the CHB is present, this area (Control Word Chain Area) follows the extension.
***Offset depends on length of CHBCOCWS.

Byte Expansions

Offset/Field Name	Bit Pattern/ Hex Value	Contents
0(0) CHBCND 6(6) CHBICND	Byte 0 1... .... .1.. ....1. .... 1... Byte 1 .1.. .... ..1. .... 1... .... .1.. .... ..1. 1	Channel condition flags. Attention status required. Attention delay active. Inhibit attention time-out. Attention has been presented. Slowdown mode BTU rejected. Slowdown mode indicator. Switched in progress flag. Secondary Read pending. Switch Read pending Terminate flag.
4(4)	1...	Set if more than 16 interrupts occur in 100 milliseconds on a secondary channel adapter.

CHANNEL CONTROL BLOCK EXTENSION FOR SECONDARY CHANNEL ADAPTER

CHB Ext. (NCP1, 2)

Program: NCP1, NCP2

Size in bytes: 128(80)

Created by: NCP generation

Pointer to CHB extension: CHBSCBA field in CHB.

Function: Contains the parameters and control fields used by the type 2 channel adapter I/O supervisor when switching primary and secondary channel adapters.

0(0) (Reserved)	
4(4) CHBSXR50 Save area for external register X'50'.	6(6) CHBSXR51 Save area for external register X'51'.
8(8) CHBSXR53 Save area for external register X'53'.	10(A) CHBSXR54 Save area for external register X'54'.
12(C) CHBSXR55 Save area for external register X'55'.	14(E) CHBSXR56 Save area for external register X'56'.
16(10) CHBSXR57 Save area for external register X'57'.	18(12) CHBSXR5C Save area for external register X'5C'.
20(14) CHBSICV Value of secondary CA's INCWAR.	22(16) CHBSOCV Value of secondary CA's OUTCWAR.
24(18) CHBSSINA Address of an In CW for reading switch commands.	26(1A) CHBYRPR Address of Out CW for response BTU indicating that the old secondary is now the primary.
28(1C) CHBYRSR Address of Out CW for response BTU indicating that the old primary is now the secondary.	30(1E) CHBSSATA Address of Out CW for response BTU indicating that attention time-out has expired on the primary CA.
32(20) CHBSBPT Pointer to secondary channel adapter buffer.	

36(24)	(Reserved)
40(28)	CHBSINCW In CW with zero count override for switch commands.
44(2C)	Area for building CW to transfer pad before response BTU 1.
48(30)	CHBPRCW Out-stop CW with no chaining for response BTU 1.
52(34)	Area for building CW to transfer pad before response BTU 2.
56(38)	CHBSRCW Out-stop CW with no chaining for response BTU 2.
60(3C)	Area for building CW to transfer pad before response BTU 4.
64(40)	CHBSARCW Out-stop CW with no chaining for response BTU 4.
68(44)	CHBSRSP1 Response BTU 1 - indicates that the old secondary is now the primary.
82(52)	CHBSRSP2 Response BTU 2 - indicates that the old primary is now the secondary.
96(60)	(Reserved)
110(6E)	CHBSRSP4 Response BTU 4 - indicates that attention time-out has expired on the primary CA.
124(7C)	(Reserved)

Program: EP/PEP

Size in bytes: 104(68) + CHVT

Created by: EP/NCP# generation

Pointer to: CHCBAD1 at X'710' for CHCB1 (Type 1/4 CA), CHCBAD2 at X'712' for CHCB2 (Type 2/3 CA)

Function: Contains the queues, CHVT and other data unique to a particular channel adapter.

		0(0) CASEL* Channel Select Bits & PEP Flags
2(2) TERMADR Terminator Address		4(4) DDCCBADR Dynamic Subchan CCB Address
6(6) QCBFLAGS* EP Flags	7(7) ACCOUNT Active Command Count	8(8) QCBTIO Test I/O Control
10(A) PDSOFRST Priority Data SVC Out Queue First Pointer		12(C) PDSOLAST Priority Data SVC Out Queue Last Pointer
14(E) PEDSOFST Priority Extended Data SVC Out Queue First Pointer		16(10) PEDSOLST Priority Extended Data SVC Out Queue Last Pointer
18(12) DSOFRST Data SVC Out Queue First Pointer		20(14) DSOLAST Data SVC Out Queue Last Pointer
22(16) EDSOFRST Extended data SVC Out Queue First Pointer		24(18) EDSOLAST Extended data SVC Out Queue Last Pointer
26(1A) DSIFRST Data SVC in Queue First Pointer		28(1C) DSILAST Data SVC in Queue Last Pointer
30(1E) EDSIFRST Extended Data SVC In Queue First Pointer		32(20) EDSILAST Extended Data SVC In Queue Last Pointer

34(22) SOFRST Status Out Queue First Pointer		36(24) SOLAST Status Out Queue Last Pointer
38(26) PSIFRST Poll Data SVC In Queue First Pointer		40(28) PSILAST Poll Data SVC In Queue Last Pointer
42(2A) SNOFRST Sense Out Queue First Pointer		44(2C) SNOLAST Sense Out Queue Last Pointer
46(2E) SSFRST Stacked Status Queue First Pointer		48(30) SSLAST Stacked Status Queue Last Pointer
50(32) TIOCLOCK TIO Clock	51(33) Reserved	52(34) SAVE62 Output X'62' Save Area
54(36) SAVE63 Output X'63' Save Area		56(38) SAVETERM Terminator Address Save Area
58(3A) Reserved		60(3C) Reserved
62(3E) Native Subchannel CCB (42 Bytes)		104(68)
Channel Vector Table (CHVT)		

*Byte expansion follows

Byte Expansions

Offset/Field Name	Bit Pattern/ Hex Value	Definition
0(0) CASEL	byte 0 1 . . . . . . .x . . . . 1 . . . . x byte 1 .1	PEP FLAG – bit on indicates that EP is busy or a CCB is queued indicating pending EP operation. No PI flag – bit on indicates that a PI is not required to give control to the queue scanner. Select control bit – Same as bit 0.3 of Out 67. Bit is always on. CA Select bit – Same as Bit 0.7 of Out 67. Bit off indicates CA no. one. Bit on indicates CA no. two. Set PI – Same as bit 1.1 of Out 67. Bit is always on.
6(6) QCBFLAGS	byte 0 . . . . . 1 . .	Panel command flag.

Program: EP/PEP

Size in bytes: Variable, depending on the number of subchannels specified.

Located: At location X'68' in the Channel Control Block (CHCB)

Created by: EP and NCP generation.

Referenced by: Level 1 and level 3 routines.

Function: Allows the level 3 routines to find a line's CCB when only the subchannel address is known. Allows level 1 routines to initialize and reset the 3705 hardware defined during generation.

0(0) CYACHVT Subchannel addresses	2 thru n* CYACHEND Address of the associated LNVT entry for each of the line adapter interfaces (each address occupies 2 bytes.) If even, it points to an active LNVT entry. If odd, it points to an inactive (dummy) CCB.
n+1 X'0001' Delimiter	n+3 CHVTPTR Pointer to the next CHVT or the first CHVT if this is the last.

*n=the number of line adapter interfaces multiplied by two (2), plus one (1).

Program: NCP

Size in bytes: Variable.

Located in: DVB

Created by: NCP generation.

Pointer to CIE: DVBDIAL field in DVB.

Function: Contains optional data required for servicing calls originated by a terminal on a switched line.

0(0)*** CIEMTAP Pointer to MTA list (last 18 bits). Included only if the device type is multiple terminal access. or CIEIDL Pointer to ID list (IDL) (last 18 bits). Included only if ID verification is used on the associated line.	
CIEFLAGS* Flags. The bit definitions in this field must be identical to those in the COEFLAGS of the call-out extension (COE).	
4(4)** CIEIDCT Count of send ID.	5(5)** CIEIDPTR Pointer to the ID to be sent.

*Indicates a byte expansion follows.

**These fields are present in the CIE only if sending of the control unit's identification is required for this device.

***Actual position depends on other extensions that are present. The CIE follows any polling, addressing, or input extensions to the DVB.

Byte Expansion

Offset/Field Name	Bit Pattern/ Hex Value	Contents
0(0) CIEFLAGS		Flags.
	1	Send hardware ID is required.
	.1	Receive hardware ID is expected.
	. . 1	Dial digits are resident.
	. . . 1	Call-in device (This bit is always one for CIE).
	. . . . .1 . .	A dial request is pending for this device.
	. . . . . .1 .	Disconnect with end of call has been received.
	1	Set Mode is required at telephone connection with this device to set up proper physical line characteristics.

Program: NCP1, NCP2

Size in bytes: 128(80)

Created by: NCP generation.

Pointer to COB: CHSVH2 field in XDH.

Function: Contains the parameters and control fields used by the type 1 channel adapter I/O supervisor.

COB Prefix

-24(-18) CXCAWQ Channel work QCB. (For format, see Queue Control Block for Work Queues.)
-16(-10) CXCAHQ Channel hold QCB. (For format, see Queue Control Block for Work Queues.)
-8(-8) CXCAECB Event control block for leasing buffers. (For format, see Event Control Block.)

0(0) COBCND* Channel condition flags.	2(2) COBICND Value of condition flags on last entry.
4(4) COBXR77 Save area for external register X'77'.	6(6) COBXR60 Save area for external register X'60'.
8(8) COBXR61 Save area for external register X'61'.	10(A) COBSR62I Save area for input from external register X'62'.
12(C) COBXR62O Save area for output to external register X'62'.	14(E) COBXR63 Save area for external register X'63'.

*Indicates a byte expansion follows.

16(10) COBXR64 Save area for external register X'64'.		18(12) COBXR65 Save area for external register X'65'.
20(14) COBXR66 Save area for external register X'66'.		22(16) COBXR67 Save area for external register X'67'.
24(18) COBSENSE Sense byte to transfer for sense commands.	25(19) (Reserved)	26(1A) COBCCMD Current channel command.
28(1C) COBERPSV Error recovery procedure save area.		
32(20) COBRELSV Release subroutine save area.		
36(24) COBNINSV Save area for inbound BTU processor.		
40(28) COBLESV Lease subroutine save area.		
44(2C) COBPIB Address of first inbound buffer.		
48(30) COBIPBF Pointer to previous inbound buffer.		
52(34) COBCIB Pointer to current inbound buffer.		
56(38) COBCID Current displacement in inbound buffer.		
60(3C) COBCBLK Address of the last complete BTU given to the system router.		

64(40) COBIBCD Number of data bytes in current BTU.		66(42) COBMDO Maximum data count for current in-bound buffer.	67(43) (Reserved)
68(44) COBMLCNT NCP generated buffer lease count for in-bound data.	69(45) COBCLCNT Current buffer lease count. (Same as COBMLCNT except during slowdown, when this field equals one.)	70(46) COBECBAD Address of ECB for leasing buffer.	
72(48) COBWQAD Address of channel adapter work QCB.		74(4A) COBHQAD Address of channel adapter hold QCB.	
76(4C) COBOXSV Save area for outbound transfer routine.			
80(50) COBROTSV Refresh outbound transfer routine save area.			
84(54) COBOBLKA Outbound BTU address.			
88(58) COBOBUFA Pointer to current outbound buffer.			
92(5C) COBODATA Current displacement in outbound buffer.			
96(60) COBFCCW Number of host buffers allocated per read list.		98(62) COBRCCW Number of host CCWs remaining in read list.	
100(64) COBFHAC Host buffer size in bytes.		102(66) COBRHAC Number of bytes remaining in host buffer.	
104(68) COBRDCNT Outbound buffer residual data count.		106(6A) COBOXCNT Number of bytes to be transferred on next outbound data service.	

108(6C) COBATTO Attention time-out duration.		110(6E) COBHPTR Pointer to dummy header buffer.
112(70) Dummy header buffer.		
116(74) COBHPAD Number of bytes in access method pad 0.	117(75) (Reserved)	118(76) COBTPTR Pointer to dummy text buffer.
120(78) Dummy text buffer.		
124(7C) COBTPAD Number of bytes in access method pad 1.	125(7D) (Reserved)	126(7E) COBDELAY Attention delay duration.

Byte Expansions

Offset/Field Name	Bit Pattern/ Hex Value	Contents
0(0) COBCND		Channel condition flags.
	Byte 0	
	1	Attention status required.
	.1	Attention delay active.
	. . 1	Monitoring suppress out.
	. . . 1	Inhibit attention time-out.
	. . . . 1 . . .	Attention has been presented.
	. . . . . 1 . .	Channel end/device end status needed.
	. . . . . 1 .	Hold QCB active.
	 1	Work QCB active.
	Byte 1	
	.1	BTU rejected.
	. . 1	Channel in slowdown mode.
	. . . 1	Abort sent indication.

CHANNEL OPERATION BLOCK FOR NCP#

Program: NCP#

Size in bytes: 128(80)

Created by: NCP Generation

Pointer to COB: CHSVH2 field in XDH (X'772')

Function: Contains the parameters and control fields used by the type 1/type 4 channel adapter I/O supervisor.

-48(-30) CXCAXHQ PIU exception queue (for format, see QCB for input queues).			
-32(-20) CXCAIQ Channel intermediate QCB (for format, see QCB for work queues).			
-24(-18) CXCAHQ Channel hold QCB (for format, see QCB for work queues).			
-16(-10) CXCAECB Event control block for leasing buffers (for format, see Event Control Block.)			
-8(-8) XXCXTCOB Dump identifier. Characters "XXCXTCOB"			
0(0) COBCND* Channel condition flags.		2(2) CPBCASEL Type 4 channel adapter port selection mask. 0100=CA4 port 2 0000=CA4 port 1	
4(4) Reserved.		6(6) COBICND Condition flags on entry.	
8(8) COBCCMD Current channel command.		10(A) COBSTAT Current status byte.	
12(C) COBSENSE Sense byte to transfer for sense commands.	13(D) Reserved.	14(E) COBRSX Next Read Start command expected.	15(F) COBWSX Next Write Start command expected.
16(10) COBXR77 Save area for external register X'77'.		18(12) COBXR60 Save area for external register X'60'.	
20(14) COBXR61 Save area for external register X'61'.		22(16) COBXR621 Save area for input from external register X'62'.	
24(18) COBXR62O Save area for output from external register X'62'.		26(1A) COBXR63 Save area for external register X'63'.	
28(1C) COBXR64 Save area for external register X'64'.		30(1E) COBXR65 Save area for external register X'65'.	

32(20) COBXR66 Save area for external register X'66'.		34(22) COBXR67I Save area for input from external register X'67'.	
36(24) COBXR67O Save area for output from external register X'67'		38(26) Reserved	
40(28) COBIBTUA Address of first inbound buffer.			
44(2C) COBIPBF Pointer to previous inbound buffer.			
48(30) COBIBUFA Pointer to current buffer.			
52(34) COBIDATA Current inbound data address.			
56(38) COBCBTU1 Address of first buffer of completed PIU			
60(3C) COBCBTUN Address of last buffer of completed PIU.			
64(40) COBBTUCT Count of PIUs passed to path control.		66(42) COBSKPCT Number of PIUs to skip for retry.	
68(44) COBMDO Maximum data count for current inbound buffer.	69(45) Reserved.	70(46) COBMLCNT Generation buffer lease count for input data.	71(47) COBCLCNT Current buffer lease count.
72(48) Reserved.			

76(4C) COBIQBS Address of last outbound PIU given to CXCAOUT.			
80(50) COBOXSV Save area for outbound transfer routine.			
84(54) COBROTSV Save area for outbound transfer routine.			
88(58) COBOBTUA Address of outbound PIU.			
92(5C) COBOBUFA Address of outbound buffer.			
96(60) COBODATA Address of outbound data.			
100(64) COBFCCW Number of host CCWs.		102(66) COBFHAC Host Read CCW byte count.	
104(68) COBRHAC Host Read CCW byte count residual out operation.		106(6A) COBRDCNT Outbound buffer residual data count.	
108(6C) COBOXCNT Number of bytes to transfer for next outbound data service.	109(6D) Reserved.	110(6E) COBHWM Attention delay CCW counter.	
112(70) COBPFAD Address of PEP flag in EP channel adapter control block.		114(72) COBO62RB Output 62 reset/request bucket	
116(74) COBATTO Attention time-out duration.		118(76) COBDELAY Attention delay interval.	
120(78) COBDUMBF Dummy buffer chain field.		122(7A) Offset to data.	123(7B) COBVPAD Buffer data count.
124(7C) Pad size as one byte of data.	124(7D) Reserved.	126(7E) Reserved.	

Byte Expansions

Offset/Field Name	Bit Pattern/ Hex Value	Contents
0(0) COBCND	Byte 0	Channel condition flags.
	1...	Attention status required.
	.1..	Attention delay active.
	..1.	Monitoring suppress out.
	...1	Inhibit attention time-out.
	.... 1...	Attention has been presented.
	.... .1..	Channel end/device end status needed.
	Byte 1	
	.1..	Block rejected flag.
	..1.	Channel in slowdown mode.

Program: NCP

Size in bytes: Variable, depending on length of dial digits.

Located in: DVB

Created by: NCP generation.

Pointer to COE: DVBDIAL field in DVB.

Function: Contains optional data required to call a terminal on a switched line.

0(0)** COESGTP Address of device's switched group table (SGT) (last 18 bits).			
COEFLAGS* Flags. The bit definitions of this field must be identical to those in the CIEFLAGS field of the CIE.			
4(4)** COELCSTI Index to LCST (MTA only).	5(5)** COEMAX Maximum field length of dial digits.	6(6)** COECUR Current number of dial digits.	7(7)** COEDIAL Dial digits. (Variable length)

*Indicates a byte expansion follows.
**Actual position depends on other extensions that are present.

Byte Expansions

Offset/Field Name	Bit Pattern/ Hex Value	Contents
0(0) COEFLAGS		Flags.
	1	Send hardware ID is required.
	.1	Receive hardware ID is expected.
	. . 1	Dial digits are resident.
	. . . 1	Call-in device. This bit is always zero for COE.
	. . . . . 1 . .	A Dial request is pending for this device.
	. . . . . 1 .	Disconnect with End of Call has been received.
	 1	Set mode is required at telephone connection with this device.

Program: NCP

Size in bytes: Variable (header=10 bytes; each entry=18-35 bytes).

Created by: NCP generation.

Pointer to CRP: SYSCKRP field in HWE.

Function: Contains check records that have not yet been processed. These records are generated by program level 1 and 3 error handling routines and are processed by a program level 5 routine (CXDIERT) that prepares buffers for transfer to the host as unsolicited MDR (miscellaneous data recorder) records.

Header

0(0) CRPL1PTR Pointer to next record unit to be used by level 1.		2(2) CRPT1PTR Pointer to the next level 1 unit to be serviced by CXDIERT.
4(4) CRPL3PTR Pointer to next record unit to be used by level 3.		6(6) CRPT3PTR Pointer to the next level 3 unit to be serviced by CXDIERT.
8(8) CRPSTAT1* Trigger control byte.	9(9) CRPSTAT2 (Reserved)	

Entry Format

0(0) CRPCTL CRP control bytes.	
CRPLNG* Length of the MDR data.	CRPFLG* CRP flag byte.

Start of MDR Data (CRPDATA)
(Refer to Section 14 for Record Formats)

		2(2) CRPABMAL Abend malfunction code.	
4(4) CRPREC* The recording mode byte. (For values, see table.)	5(5) CRPID MDR record ID field. The 3705 MDR record is always X'05'.	6(6) CRPBERT* Box error record type code.	7(7) CRPLCRT Lost check record counter.
8(8) Up to 29 bytes of formatted information. Remainder of MDR data. (Refer to Section 14.)			

*Indicates a byte expansion follows.

Byte Expansions

Offset/Field Name	Bit Pattern/ Hex Value	Contents
8(8) (Header) CRPSTAT1		Trigger control byte.
	X'00'	Trigger of CXDIERT is required.
	X'80'	Trigger of CXDIERT is not required.
0(0) CRPLNG (Entry Format)		Length of MDR data.
	X'04'	Invalid record.
	X'12'	Type 1/4 channel adapter.
	X'12'	Type 1 scanner.
	X'12'	Type 2 scanner-1.
	X'12'	Type 2 scanner-2.
	X'12'	Type 2 scanner-3.
	X'12'	Type 2 scanner-4.
	X'12'	Invalid operation code.
	X'12'	Input/Output instruction exception.
	X'14'	Type 3 scanner-1.
	X'14'	Type 3 scanner-2.
	X'14'	Type 3 scanner-3.
	X'14'	Type 3 scanner-4.
	X'14'	Unresolved program level 1 interrupt.
	X'14'	Unresolved program level 3 interrupt.
	X'18'	Type 2 channel adapter-1.
	X'18'	Type 2 channel adapter-2.
	X'19'	Permanent line errors.
	X'19'	Line statistics.
1(1) CRPFLG		CRP flag byte.
	1	End of check record pool. (Bits 1-5 reserved).
	. . . . . 1 .	Record is being serviced by CXDIERT.
	 1	Check record unit has been used (filled), requires service.
4(4) CRPREC (MDR Data)		Recording mode.
	X'00'	Permanent line errors.
	X'01'	Line statistics.
	X'10'	Type 1/4 channel adapter.
	X'10'	Type 2 channel adapter-1.
	X'10'	Type 2 channel adapter-3.
	X'11'	Type 1 scanner.
	X'11'	Type 2 scanner-1.
	X'11'	Type 2 scanner-2.
	X'11'	Type 2 scanner-3.
	X'11'	Type 2 scanner-4.
	X'12'	Invalid operation code.
	X'12'	Input/Output instruction exception.
	X'13'	Unresolved program level 1 interrupt.
	X'13'	Unresolved program level 3 interrupt.
	X'FF'	Invalid record.
6(6) CRPBERT		Box error record type code.
	X'01'	Unresolved program level 1 interrupt.
	X'02'	Type 2 channel adapter-2.
	X'03'	Unresolved program level 3 interrupt.
	X'04'	Type 2 channel adapter-1.
	X'08'	Type 2 scanner-4.
	X'08'	Invalid operation code.
	X'09'	Type 3 scanner-4.
	X'10'	Type 2 scanner-3.
	X'11'	Type 3 scanner-3.
	X'20'	Type 2 scanner-2.
	X'21'	Type 3 scanner-2.
	X'40'	Type 2 scanner-1.
	X'41'	Type 3 scanner-1
	X'84'	Type 1/4 channel adapter.
	X'C0'	Type 1 scanner.

Offset/Field Name	Bit Pattern/ Hex Value	Contents
7(7) CRPLCRCT		Lost check record counter.
	xxxx	Number of records lost immediately preceding this record.
	 xxxx	Number of records lost while waiting for this record to be transferred to the host. Records are lost when the CRP is full and level 5 is unable to free up a unit by transferring a record to the host.

Program: PEP, EP

Size in bytes: 48(30)

Located in: Routine CYAIS of module CYASVC.

Created by: NCP & EP generation.

Updated by: N/A

Referenced by: ICP

Function: Contains the CCB command codes used for translating the 8-bit command code into the 5-bit CCB command code.

0-47(0-2F)	CMDTABLE CCB command codes. (See Section 6.)

Program: NCP

Size in bytes: 7(7)

Created by: NCP generation.

Pointer to CTB: None. See link edit map.

Function: Indicates end of timer resolution queues. This table must be located at least 25 bytes from start of a CSECT.

0(0) CTBDCCB Dummy character control block address.		2(2) CTBDWORK Dummy work entry.	
4(4) CTBUXREM Dummy CCBTOREM.	5(5) (Reserved).	6(6) (Reserved).	

Program: NCP#

Size in bytes: 82(52)

Created by: Physical unit specification at NCP generation. One CUB is generated for each physical unit.

Pointer to CUB: In RVT and in the SOT.

Function: Contains the QCB, status information, and scheduling information for a physical unit.

Link Inbound Queue Control Block (See QCB for input queues for all bit definitions).

0(0) CUB1ECB Pointer to first element queued (Shifted address).		2(2) CUBLECB Pointer to last element queued (Shifted address).
4(4) CUBSTAT Task and queue status.	5(5) CUBPRKEY QCB ID flag and task protection key.	6(6) CUBLINK Pointer to next QCB on the queue (Shifted address).
8(8) CUBTSKEP Task entry point (last 18 bits).		
CUBMCBD Major control block displacement.	CUBSCHED Task dispatching priority.	
12(C) CUBSAVE Address of save area pushdown list (Shifted address).		14(E) CUBLUNK Pointer to previous QCB on queue (Shifted address).
16(10) CUBLOBH Link outbound queue head pointer (Shifted address).		18(12) CUBLOBT Link outbound queue tail pointer (Shifted address).
20(14) CUBLOSH Link outstanding queue head pointer (Shifted address).		22(16) CUBLOST Link outstanding queue tail pointer (Shifted address).
24(18) CUBLKB Address of link control block (last 18 bits).		
CUBADRC SDLC addressing character.		
28(1C) CUBRSE Network address of resource.		30(1E) CUBSSCF* Service seeking control flags. / CUBSSCP* Contact poll commands.
32(20) CUBSTATS* Station status.	33(21) CUBOCF* Service seeking output control flags.	34(22) CUBTCNT Transmission counter.
36(24) CUBAPIU Address of physical services PIU (last 18 bits).		
CUBTYPE* Station type.		

40(28) CUBNR NR receive count.	41(29) CUBNS NS send count.	42(2A) CUBERS Error retry status. (Note 1)	
44(2C) CUBEERS Extended retry status. (Note 2)	45(2D) CUBTRTCT Total retry count.	46(2E) CUBOCL Outstanding count limit.	47(2F) CUBCOC Current outstanding count.
48(30) CUBPNS NS at time of poll.	49(31) CUBPCNT Pass limit.	50(32) CUBRTCNT 1st level ERP retry count.	2nd level ERP retry count.
52(34) CUBSRTLR Second level retry count.	53(35) CUBRCMD* Run command modifiers.	54(36) CUBLERPT 2nd level ERP time-out value.	
56(38) CUBTERR Monitor secondary error count.	57(39) CUBERPT 2nd level ERP time delay.	58(3A) CUBERPCS ERP control flags send.	59(3B) CUBOCLS Outstanding count limit savearea

Physical Unit Processing Queue

60(3C) CPQ1ECB Pointer to first element queued (Shifted address).		62(3E) CPQLECB Pointer to last element queued (Shifted address).	
64(40) CPQSTAT Task and queue status.	65(4) CPQPRKEY Protection key.	66(42) CPQLINK Pointer to next QCB on the queue.	
68(44) CPQTSKEP Task entry point (last 18 bits).			
CPQMCBD Major control block displacement.	CPQSCHED Task scheduling priority.		
72(48) CPQSAVE Address of save area pushdown list (Shifted address).		74(4A) CPQLUNK Pointer to previous QCB on queue (Shifted address).	
76(4C) CUBPSTAT* Physical unit primary status.	77(4D) CUBSSTAT Physical unit secondary status.	78(4E) CUBMAXN Segment size (in buffers).	79(4F) Reserved.
80(50) CUBSEGSZ Maximum segment size (in bytes).		82(52) Reserved	

*Indicates a byte expansion follows.

Note 1: Refer to the LXBSTAT and LXBSTATC fields of the Link XIO Control Block for a definition of the status bits.

Note 2: Refer to the LXBEXTST field of the Link XIO Control Block for a definition of the status bits.

Switched Extension

84(54)	
CUBLUN Maximum number of entries in LUV.	CUBLUV Pointer to LUV (Last 18 bits)

Byte Expansions

Offset/Field Name	Bit Pattern/ Hex Value	Contents
30(1E) CUBSSCF	Byte 0	Service seeking commands:
	1	Poll skip flag.
	.1	Halt service seeking.
	. . 1	Not operational.
	 1	Contact Poll command active.
CUBSSCP	Byte 1	Contact poll commands:
	1	Disconnect Mode.
	.1	Set Normal Response Mode.
	. . 11 1 . . .	Poll command mask.
	. . . . . 1 . .	Set Initialization Mode (SIM)
	. . . . . 1 .	Exchange Identification (XID)
	 1	Contact poll command field.
32(20) CUBSTATS		Station status:
	. . . 1	Remote power-off in progress.
33(21) CUBOCF		Service seeking output control flags:
	1	Output skip bit.
	.1	Run terminator interlock.
	. . 1	RNR received.
	. . . 1	Second level delay in progress.
	. . . . . 1 . .	Duplex data.
	. . . . . 1 .	Half-duplex poll control.
	 1	Half-duplex poll in progress.
36(24) CUBTYPE		Station type:
	x	1=Duplex station. 0=Half-duplex station.
	. . 1.	Switched SDLC station.
	. . . . . 1. .	Terminal node (type 1 PU).
	. . . . . 1.	Cluster controller (type 2 PU)
	 x	1=Intermediate node (INN). 0=Boundary node (BNN).
53(35) CUBRCMD		Run command modifiers:
	.1	Override 1st and 2nd level retries.
	. . . 1	Immediate retry.
76(4C) CUBSTAT		Physical unit primary status:
	1	Session established.
	.x	1=Processing session initiating request. 0=Not processing session initiating request.
	. . x	1=Processing session terminating request. 0=Not processing session terminating request.
77(4D) CUBSSTAT		Physical Unit Secondary Status:
	1	3270 station.

Program: EP, PEP

Size in bytes: 6+4 per line to be traced

Created by: NCP generation

Referenced by: CYATRC, CYANUC, CYASVC, and CYABIS

Function: Provides the linkage for level 2 line trace only.

0(0) QEND Address of last entry in table.	2(2) FIRSTQ Address of first queue element.
4(4) LASTQ Address of last queue element.	6 - (4n+2) Address of level 2 trace routine.

8 - (4n+4) Address of next available queue or, if in use, the CCB address of line being traced.

Program: NCP

Size in bytes: Variable, depending on addressing characters.

Located in: DVB

Created by: NCP generation.

Pointer to DAE: (None.) Immediately follows polling extension; if no polling extension is present, the DAE immediately follows the DVB.

Function: Contains addressing characters for a device.

0(0)* DAEOSP Device output delay.	1(1)* DAEACUR Current number of addressing characters	2(2)* DAEADDR Addressing characters. (DVBAO field in the DVB points here.) (variable length)

*Actual position depends on the extensions that are present.

Program: NCP

Size in bytes: 9(9)

Located in: DVB extension.

Created by: NCP generation.

Pointer to DIA: DVBINVO field in DVB.

Function: Contains information about input devices.

0(0)** DIARVTE Address of RVT entry (last 18 bits).		
DIASA Invite command save area. or DIAMOD Command modifiers.	1(1)** DIAFLAG Flags. (See BCUFLAGS for bit definitions; bits 6 and 7 are used as part of RVT entry address.)	
4(4)** DIASEQ Command sequence number.		6(6)** DIASRC Source name field.
8(8)** DIARD* Record definition.		

*Indicates a byte expansion follows.
**Actual position depends on other extensions that are present.

Byte Expansion

Offset/Field Name	Bit Pattern/ Hex Value	Contents
8(8) DIARD		Record definition.
	.... .1..	EOB=EOT.
	10	Message.
	01	Block.
	11	Transmission.

Program: NCP

Size in bytes: 24(18)

Created by: NCP generation.

Pointer to DRS: SYSDRSP field in HWE.

Function: Contains addresses of appendage routines to be given control by CXCCPSUP.

0(0) CTXDRS Set to zero.	2(2) DRSICW Address of ICW display routine.
4(4) DRSICWA Address of ICW display routine.	6(6) (Reserved)
8(8) (Reserved)	10(A) (Reserved)
12(C) DRSTBL Table of display/refresh/select control values used by individual appendage routines. (length of 12 bytes)	

Program: NCP

Size in bytes: Variable, depending on extensions present.

Created by: NCP generation. One DVB is generated for each BSC/SS device.

Pointer to DVB: RVTRP field; LCBDVBP field of LCB during session.

Function: Serves as the base for all component, terminal, and device control unit representations. It includes queue control blocks plus all parameters required by a device.

Device Work QCB

(See QCB for Work Queues for all bit definitions.)

0(0) DVQ1ECB Pointer to first element queued. (Shifted address.)		2(2) DVQLECB Pointer to last element queued. (Shifted address.)
4(4) DVQSTAT Task and queue status.	5(5) DVQPRKEY Protection key.	6(6) DVQLINK Pointer to next QCB on the queue. (Shifted address.)

Device Input QCB

(See QCB for Input Queues for all bit definitions.)

8(8) DVI1ECB Pointer to first element queued. (Shifted address.)		10(A) DVILECB Pointer to last element queued. (Shifted address).
12(C) DVISTAT Task and queue status.	13(D) DVIPRKEY Protection key.	14(E) DVILINK Pointer to next QCB on the queue. (Shifted address).
16(10) DVITSKEP Task entry point (last 18 bits).		
DVIMCBD Major control block displacement	17(11) DVISCHED Task dispatching priority.	
20(14) DVISAVE Address of save area push-down list. (Shifted address.)		22(16) DVILUNK Pointer to previous QCB on the queue. (Shifted address.)
24(18) DVIBHSET BH set (or BHR) address (last 18 bits).		
DVIBHRST BHR status bits.	25(19) DVIBHSCH BHR scheduling bits.	

28(1C) DVBRID Device resource ID.	30(1E) DVBFEAT1* Device features byte 1.	31(1F) DVBFEAT2* Device features byte 2.

End of Device Input QCB

32(20) DVBPTR Auxiliary pointer (last 18 bits). If device is component, this field contains pointer to shared terminal DVB. If device is terminal, this field contains a pointer to line LCB.			
DVBTYPE* Device type.			
36(24) DVBSDRT Transmission counter or pointer to OLTT control block, if in test mode.		38(26) DVBSDRE Temporary error counter.	39(27) DVBINVO Offset to device input area (DIA).
40(28) DVBBHRO Offset to BHR extension.	41(29) DVBBUO Offset to switched backup extension (BUE).	42(2A) DVBDIAL Offset to call-in or call-out extension (CIE or COE).	43(2B) DVBABNM* Abnormal mode indicators. This field is meaningful only when a reset is in progress. Bits 2-7 have the value of the command modifiers when a reset is in progress. Bits 0-1 indicate that a deactivation is in progress.

Service Seeking Control Block (SSC)

44(2C) DVBSTAT* Status byte 1.	45(2D) DVBSTAT2* Status byte 2.	46(2E) DVBDMF* Device mode flags.
48(30) DVBPCC Pending contact count.	49(31) DVBCPI (Reserved).	

Polling/Addressing Extension

This extension is present only if the device requires polling or addressing or both.

50(32) DVBTLIM Transmission limit.	51(33) DVBTCNT Transmission counter.	52(34) DVBAO Offset from DVBSTAT to first addressing character in DAE.	53(35) DVBCLSO Cluster general poll extension (CGP) offset.

Polling Extension

The following fields are present only if polling of device is required. (If this area is included, the device input extension (DIA) must also be included.)

54(36) DVBPCUR Number of polling characters excluding ENQ.	55(37) DVBPOLL Polling characters. (Variable length.)

*Indicates a byte expansion follows.

Byte Expansions

Offset/Field Name	Bit Pattern/ Hex Value	Contents
30(1E) DVBFEAT1		Device features byte 1.
	1	Block limit - BSC patch control. (NCP2, 3)
	.1	Conversational capability.
	. . 1	Buffered receive.
	. . . 1	General poll.
	. . . . 1 . . .	Batched message input.
	. . . . .1 . .	Carriage return delay (NCP2, 3).
	. . . . . .1 .	Text time-out suppression.
	1	Break-terminal originated data; transfer can be interrupted.
31(1F) DVBFEAT2		Device features byte 2.
	1	Critical situation notification.
	.1	1050 Auto EOB feature. (NCP2, 3).
	. . 1	1050 Receive Interrupt feature. (NCP2, 3).
	. . . x	(Reserved).
	. . . . 1 . . .	Device on fan-out modem. (NCP2, 3).
	. . . . .1 . .	Input extension exists (DIA).
	. . . . . .1 .	Addressing extension exists (DAE).
	1	Polling information exists.
32(20) DVBTYPE		Device type.
		Components
	X'48'	2980
		Non-BSC Terminals
	X'80'	MTA
	X'82'	1050
	X'84'	2740, Model 1.
	X'85'	2741
	X'87'	2740, Model 2.
	X'88'	115A
	X'89'	83B3
	X'8A'	TWX
	X'8B'	WTTY
		BSC Terminals.
	X'4C'	3275, 3277, 3284, 3286
	X'C0'	Logical connection terminals.
	X'C1'	1130
	X'C2'	1800
	X'C3'	2701
	X'C4'	2703
	X'C5'	2715
	X'C6'	2770
	X'C7'	2780
	X'C8'	2972
	X'C9'	3705
	X'CA'	2020
	X'CB'	2025
	X'CC'	3271, 3275
	X'CD'	3780
	X'CE'	3735
	X'CF'	3741 (NCP2, 3)
	X'D0'	3747 (NCP2, 3)
43(2B) DVBABNM		Abnormal mode indicators.
	1	Deactivate device in progress.
	.1	Deactivate line orderly in progress.
	. . 1	Reset at end of command in progress.
	. . . 1	Reset conditional in progress.
	. . . . x . . .	(Reserved).
	. . . . .1 . .	Reset immediate in progress.
	. . . . . .1 .	Reset device queue in progress.
	1	Critical situation notification device serviced.

Offset/Field Name	Bit Pattern/ Hex Value	Contents
44(2C) CVBSTAT		Status byte 1.
	1...	Service seeking skip bit.
	.1..	Contact pending.
	..1.	Device active, accept TP commands.
	...1	Disconnect received. A disconnect has been received for the last session and an initiation command may now be accepted. Any non-session initiating TP command should be refused.
	.... 1...	In session.
	.... .1..	Device in abnormal mode (reset or deactivate device in programs).
	.... ..1.	Connection exists.
	1	Invite pending.
45(2D) DVBSTAT2		Status byte 2.
	1...	Backup mode.
	.1..	I/O error lock.
	..1.	3270 Device end, 2740-2 suppress MDR
	...1	Inquiry mode-2770.
	.... 1...	Suppress response to host.
	.... .1..	A noncompetitive Invite exists. When the line or device was deactivated, an Invite remained for this device.
	.... ..1.	Logical error lock.
	1	Selective text return
46(2E) DVBDMF		Device mode flags.
	Byte 0	
	.1..	Override write text mode ERPs.
	..1.	Reject leading graphic (write operations).
	...1	EIB deletion (non-transparent only).
	.... .1..	Inhibit time fill/inhibit WACK limit.
	.... ..1.	Embedded line control (non-transparent)/ intermediate control character insertion.
	1	Critical text.
	Byte 1	
	.1..	Override read text mode ERPs.
	..1.	Reject leading graphics (read operations).
	...1	EIB insertion/inhibit text timeout.
	.... 1...	Sub-blocking (input).
	.... .1..	Interrupt enabled.
	.... ..1.	Activate monitor mask.

Program: NCP

Size in bytes: 8(8)

Located in: Dynamically allocated BCU/PIU buffer or as a permanent control block in storage.

Created by: NCP generation or dynamically as part of first buffer in a BCU.

Pointer to ECB: None.

Function: To control BCU status or event status of an associated block.

0(0) ECBCSTAT[1,2] BCU status byte; valid only for ECBs contained in buffers.	1(1) ECBESTAT[1,2] Event status byte.	2(2) ECBECHN[1] ECB chain pointer. (Shifted address.)
4(4) ECBTMINT[1] Set time interval as specified by SETIME macros. - - - - - - - - - - - - - - - - or ECBTNCT[1] BCU text count.		6(6) ECBWQCB[1] Address of waiting task's input QCB. (Shifted address.)

[1]See block control unit for labels used in the first buffer of a BCU.

[2]Indicates a byte expansion follows.

Byte Expansions

Offset/Field Name	Bit Pattern/ Hex Value	Contents
0(0) ECBCSTAT		BCU status byte.
	1	BCU enqueued.
	. .00 00. .	Lowest priority.
	. .11 11. .	Highest priority.
1(1) ECBESTAT		Event status byte.
	1	Event satisfied.
	.1	Task ready to be dispatched.
	. .1	Supervisor link.
	. . .1	ECB enqueued bit.
	x	1=Stop sending after this BTU. 0=No need to stop sending.

EBCDIC CHARACTER DECODE DISPLACEMENT TABLE — ECDDT

Program: NCP, EP

Size in bytes: 64(40)

Located in: Module CYABL.

Created by: NCP and EP generation.

Updated by: N/A

Referenced by: CYATADAO, CYARAPHI.

Function: Provides offset into branch table for proper control character processing.

0-3F(0-63)	EBCXMTBT Displacement data.

Program: NCP

Size in bytes: 48(30); 50(32) for NCP2 and NCP# with PEP.

Created by: NCP generation.

Pointer to HWE: SYSW6 field in XDA. (X'07D8)

Function: Contains frequently accessed system halfword control fields.

0(0) SYSBUFCT Initial free buffer count.	2(2) SYSBPQBC Exit slowdown threshold count.
4(4) SYSATBP Address trace block pointer.	6(6) SYSCKRP Check record pool pointer.
8(8) SYSLTBP Line trace block pointer.	10(A) SYSDRSP Display/refresh/select table pointer.
12(C) SYSPDBP Panel control block pointer.	14(E) SYSEBCP EBCDIC time and date control block pointer.
16(10) SYSTVSP Time value select table pointer.	18(12) SYSLCSP Line control select table pointer.
20(14) SYSCOOP (NCP1, NCP2) Channel work queue pointer. or SYSFQXP (NCP3) FM request transporter QCB pointer.	
24(18) SYSCRNP Channel normal data pointer.	
28(1C) SYSANSP Auto-network shutdown queue pointer.	
32(20) SYSERTP Error record transfer queue pointer.	
36(24) SYSPCBP Panel queue pointer.	
40(28) SYSTMRP Timer completion queue pointer.	
44(2C) SYSNIQP Non-device input queue pointer.	
48(30) SYSCHVTP Pointer to EP channel vector table (NCP2, NCP#)	50(32) (Reserved)

Communication scanner 1 control bytes

52(34) CSB1FLAG*	53(35) CSB1SCNL Scan limit	54(36) CSB1HISS High speed select	55(37) CSB1ASUB Address substitution

Communication scanner 2 control bytes

56(38) CSB2FLAG*	57(39) CSB2SCNL Scan limit	58(3A) CSB2HISS High speed select	59(3B) CSB2ASUB Address Substitution

Communication scanner 3 control bytes

60(3C) CSB3FLAG*	61(3D) CSB3SCNL Scan limit	62(3E) CSB3HISS High speed select	63(3F) CSB3ASUB Address Substitution

Communication scanner 4 control bytes

64(40) CSB4FLAG*	65(41) CSB4SCNL Scan limit	66(42) CSB4HISS High speed select	67(43) CSB4ASUB Address Substitution
68(44) SYSPSBP Pointer to the physical services control block			
72(48) SYSSITP Pointer to the sub-area index table			
76(4C) SYSSVTP Pointer to the sub-area vector table			

*Indicates a byte expansion follows.

Byte Expansions

Offset/Field Name	Bit Pattern/ Hex Value	Comments
52(34) CSB1FLAG	x... x	1=Scanner installed 1=Scanner is a type 3
56(38) CSB2FLAG	x... x	1=Scanner installed 1=Scanner is a type 3
60(3C) CSB3FLAG	x... x	1=Scanner installed 1=Scanner is a type 3
64(40) CSB4FLAG	x... x	1=Scanner installed 1=Scanner is a type 3

Program: EP, PEP

Size in bytes: 84(54)

Located in: Routine CYAIS of module CYASVC.

Created by: NCP and EP generation.

Referenced by: Routine CYAIS of module CYASVC.

Function: Points to ICE routines for command processing.

0(0) Unused	
4(4) Address pointer to Write. (BSC) (CYACWRIB)	6(6) Address pointer to Write. (Start-stop) (CYACWRIS)
8(8) Address pointer to Read. (BSC) (CYACREAB)	10(A) Address pointer to Read. (Start-stop) (CYACREAS)
12(C) Address pointers (2) to No-op. (general) (CYACENOP)	
16(10) Address pointers (2) to Sense. (general) (ICESEN)	
20(14) Address pointers (2) to Wrap. (general) (ICEWRA)	
24(18) Address pointer to Prepare. (BSC) (CYACPREB)	26(1A) Address pointer to Prepare. (Start-stop) (CYACPRES)
28(1C) Address pointers (2) to invalid code. (CMDERROR)	
32(20) Address pointer to invalid code. (CMDERROR)	34(22) Address pointer to Write Break. (2848 Start-stop) (CYACBRES)
36(24) Address pointer to Poll. (BSC) (CYACPOLLB)	38(26) Address pointer to Poll. (Start-stop) (CYACWRIS)
40(28) Address pointer to invalid code. (CMDERROR)	46(2E) Address pointer to Poll SOH. (2260 start-stop) (CYACPOLS)
52(34) Address pointer to invalid code. (CMDERROR)	54(36) Address pointer to Read Clear. (2848 start-stop) (CYACRDCL)
56(38) Address pointer to invalid code. (CMDERROR)	58(3A) Address pointer to Break or Diagnostic Poll. (Start-stop) (CYACBKPL)
60(3C) Address pointer to Search. (BSC) (CYACSEAB)	62(3E) Address pointer to Search. (Start-stop) (CYACSEAS)
64(40) Address pointer to Disable. (BSC) (ICEDISAB)	66(42) Address pointer to Disable. (Start-stop) (ICEDISAB)
68(44) Address pointer to Enable. (BSC) (ICEENABL)	70(46) Address pointer to Enable. (Start-stop) (ICEENABL)
72(48) Address pointer to Dial. (BSC) (ICEDIAL)	74(4A) Address pointer to Dial. (Start-stop) (ICEDIAL)

76(4C) Address pointer to Adprep. (BSC) (CYACADPB)	78(4E) Address pointer to invalid code. (CMDERROR)
80(50) Address pointer to Set Mode. (BSC) (CYACSETB)	82(52) Address pointer to invalid code. (CMDERROR)

Program: NCP2, NCP#, EP

Size in bytes: 40(28)

Located in: Routine CYAIS of module CYASVC

Created by: NCP and EP generation.

Referenced by: Routine CYAIS.

Function: Contains address pointers to IFD and CAEC routines.

0-39(0-27) IFDADDR IFD address table.	
0(0) No action, TIO (00) command. (CAEC180)	2(2) Address pointer for Write (08) command. (IFDWRI)
4(4) Address pointer for Read (10) command (IFDREA)	6(6) No action. No-op (18) command. (CAEC180)
8(8) Address pointer for sense (20) command (CAEC190)	10(A) No action. Wrap (28) command. (CAEC180)
12(C) Address pointer for Prepare (30) command. (IFDPRE)	14(E) ERROR (38)
16(10) Address pointer for Write Break (40) command (IFDWRI).	18(12) Address pointer for Poll (48) command (IFDPOL)
20(14) Address pointer for Inhibit (50) command (IFDREA)	22(16) Address pointer for Poll SOH (58) command (IFDWRI).
24(18) Address pointer for Read Clear (60) command (IFDREA).	26(1A) Address pointer for Break (68) command (IFDWRI)
28(1C) Address pointer for Search (70) command (IFDREA)	30(1E) Address pointer for Disable (78) command (CAECL80).
32(20) Address pointer for Enable (80) command (IFDENA).	34(22) Address pointer for Dial (88) command (IFDIAL).
36(24) Address pointer for Address Prepare (90) command (IFDPRE).	38(26) Address pointer for Set Mode (98) command. (IFDSTMD)

Program: NCP

Size in bytes: Variable

Created by: NCP generation.

Pointer to IDE: None. Follows IDL.

Function: Contains one entry for each valid ID that can be received over a line or lines for which the list is being used.

The IDE has the following format if device association is not possible.

0(0)	1(1)	2(2)
IDELEN ID length	IDEFLAG* Entry flags.	ID characters. (Variable length.)
** IDEPADL Length of maximum number of pad characters needed for alignment.		

The IDE has the following format if device association is possible.

0(0)		
IDEDVBP Pointer to DVB (last 18 bits).		
IDELEN ID length	IDEFLAG* Entry flags.	
4(4) ID characters. (Variable in length.)		
** IDEPADL Length of maximum number of pad characters needed for alignment.		

*Indicates a byte expansion follows.
**Follows ID characters.

Byte Expansions

Offset/Field Name	Bit Pattern/ Hex Value	Contents
1(1) IDEFLAG		Entry flags.
	1	Device association is possible for this entry.
	.1	End of list.
	. .1	Notify host if no match. (Meaningful only for first and last entries of list.)

Program: NCP

Size in bytes: 4(4)

Located in: Beginning of identification list.

Created by: NCP generation.

Pointer to IDL: CIEIDL field in CIE.

Function: Precedes the first entry in an ID list for switched BSC lines whose terminals identify themselves. The list is required only if validity checking of the incoming ID is required.

0(0) IDLSIZE Maximum number of bytes in the list	2(2) Halfword to force fullword alignment for first entry.

Program: NCP

Size in bytes: 36(24)

Created by: NCP generation.

Pointer to IOB: LCBACBP

Function: Contains status of BSC/SS I/O operations.

0(0) IOBIMCTL* Immediate control flags.	1(1) IOBCMAND* I/O command field.	2(2) IOBCMODS* IOB command modifiers.
4(4) IOBEXTST* Extended status field. Contains error indicators.	5(5) IOBRDESC Record descriptor byte.	6(6) IOBSTAT* Outcome of command operation.
8(8) IOBEREST First error extended status. This field is set equal to IOBEXTST when the first recoverable error occurs.	9(9) IOBRTYCT Retry count for first level ERP attempts.	10(A) IOBERST First error status. This field is set equal to IOBSTAT when the first recoverable error occurs. IOBLTSM SCF mask field (when OLLT active)
12(C) IOBSTOFS Initial data offset, used to locate the starting point in the first buffer of a block.	13(D) IOBOFSET Final data offset used to locate the buffer position of the last character in the block that was stored. Zero if buffer is filled.	14(E) IOBDATAP Data pointer to first buffer in the block. (Shifted address.)
IOBTCBPT Pointer to OLLT (when OLLT active).		
16(10) IOBFNLPT Pointer to last buffer in chain (Shifted address.) or IOBLTCT Transmit or Recive count (OLLT).		18(12) IOBINPUT Input control data address. Contains the address of the first buffer when buffers are needed to store a reply to text, selection, or inquiry. (Shifted address.) IOBLTL2 Secondary CCBL2 (when OLLT active).

*Indicates a byte expansion follows.

20(14) IOBOUTPT Output control data address. For Write commands, contains the address of the text data in buffers.		
IOBCTCCT Control count. Number of characters to be transmitted from field addressed by the output control data address.	21(15) Address of the field to be transmitted. or IOBLTLAB Pointer to lookahead buffer (OLLTLAB)	
24(18) IOBLCB Pointer to the line control block. (Shifted address.)		26(1A) IOBBKSIZ Received block's size (number of data characters stored).
28(1C) IOBPOLL Address of the entry in the service order table for the next station to be polled minus two, used when the communications controller is the master station (last 18 bits).		
IOBSSCB Service seeking control byte.	29(1D) IOBMTASA MTA 1050 station address byte.	30(1E) IOBTRADR Station select address for the communications controller when it is a tributary station.
32(20) IOBSEL Address of the field that contains the selection address for the station to be selected by the communications controller (last 18 bits).		
IOBCRTN Carriage position.	33(21) IOBPFLAG* PEP flag field. (NCP2, #)	

*Indicates a byte expansion follows.

Byte Expansions

Offset/Field Name	Bit Pattern/ Hex Value	Contents
0(0) IOBIMCTL		Immediate control flags.
	1...	Reset immediate.
	.1..	Write request - conditional reset.
	..1.	Monitor mode.
	...1	Send interrupt.
	.... 1...	Conditional send interrupt.
1(1) IOBCMAND		I/O command field.
	X'10'	Write initial.
	X'12'	Write continue.
	X'16'	Write recover.
	X'17'	Write delay. (NCP2, #)
	X'19'	Write.
	X'25'	Read.
	X'27'	Read delay. (NCP2, #)
	X'28'	Read initial.
	X'2A'	Read continue.
	X'83'	Disable.
	X'8D'	Enable.
	X'8F'	Dial.
	X'94'	Write EOT.
	X'9B'	Write control.
	X'AC'	Read status.
2(2) IOBCMODS		IOB Command Modifiers.
	Byte 0	
	1...	Suppress lost data.
	.1..	Override text mode ERPs.
	..1.	Reject received leading graphics.
	...1	Inhibit text time-out (start-stop). ITB mode not transparent (BSC).
	.... 1...	Sub-blocking mode.
	.... .1..	Inhibit WACK limit (BSC). Inhibit time fill (start-stop).
	.... ..1.	Enable length check. ITB mode transparent.
	1	Hold buffers.
	Byte 1	
	1...	Reset.
	.1..	Send priority. Manual dial (Enable cmd only).
	..1.	ETX (Write commands). Single poll (Read commands).
	...1	Offset (Write commands). First buffer assigned (Read commands).
	.... 1...	Insert (Write commands). Send leading graphics (Read commands). Send identification (Enable).
	.... .1..	Transparent text (Write commands). Send positive ACK (Read commands). Identification mode (Enable).
	.... ..1.	Set negative ACK (Read commands). SOH (Write commands). Multiple terminal access mode. (Enable commands.)
	1	Set alternate ACK.
4(4) IOBEXTST		Extended status field.
	1...	Overrun/underrun.
	.1..	Line quiet time-out.
	..1.	DLE format exception.
	...1	Sub-block error.

Offset/Field Name	Bit Pattern/ Hex Value	Contents
6(6) IOBSTAT		Outcome of command operation.
	Byte 0	
		Flags
	1	Extended error status.
	.1	Format exception (bad line control sequence).
	. . 1	Sync check (stop bit error start-stop only).
	. . . 1	Data check (block check character error).
	 1	Length check.
		Read/Write Group Masks
	. . . . 000.	No errors.
	. . . . 001.	Receive text.
	. . . . 010.	Receive text reply.
	. . . . 011.	Receive control; command reject.
	. . . . 100.	Status outstanding when command issued; command not executed.
	. . . . 101.	Send text reply.
	. . . . 110.	Send text.
	. . . . 111.	Send control.
		Data Set Control Group Masks
	. . . . 000.	No errors.
	. . . . 001.	Receive ID.
	. . . . 010.	Receive ID reply.
	. . . . 011.	Connect.
	. . . . 100.	Status outstanding when command issued.
	. . . . 101.	Error in dialing phase.
	. . . . 110.	Send ID.
	. . . . 111.	Disconnect.
	Byte 1	Extended (line) response. See Section 7.
33(21) IOBPFLAG		PEP flag field. (NCP2, #)
	x	Line type: 0=NCP 1=EP
	.x	PEP switchable line: 0=Not switchable. 1=switchable.
	. . x	Line-active save bit. 0=Line inactive at time of switch. 1=Line active at time of switch.
	. . . . . x .	Part of IOBSEL address.
	 x	Part of IOBSEL address.

Program: NCP

Size in bytes: Variable, depending on line-type extensions.

Created by: NCP generation, one for each BSC/SS line.

Pointer to LCB: RVTRP field in RVT.

Function: Contains fields required for (1) scheduling line operations, (2) maintaining line-significant status information, and (3) requesting I/O operations from the communications I/O program (levels 2 and 3).

Line I/O QCB (LCBLIOQ)
(See QCB for Input Queues for all bit definitions.)

0(0) LCI1ECB Pointer to first element queued. (Shifted address.)		2(2) LCILECB Pointer to last element queued. (Shifted address.)
4(4) LCISTAT Task and queue status.	5(5) LCIPRKEY Protection key.	6(6) LCILINK Pointer to next QCB on the queue (Shifted address.)
8(8) LCITSKEP Task entry point. (last 18 bits)		
LCIMCBD Major control block displacement.	9(9) LCISCHED Trigger scheduling priority.	
12(C) LCISAVE Address of save area push-down list. (Shifted address.)		14(E) LCILUNK Pointer to previous QCB on the queue. (Shifted address.)
16(10) LCIBHSET BHR or BH set address (last 18 bits).		
LCIBHRST BHR status bits	17(11) LCIBHSCH BHR scheduling bits.	

Line Work QCB (LCBLWQ)
(See QCB for Input Queues for all bit definitions.)
Note: By format, this is an Input QCB. Line Work QCB is simply the name given to this particular Input QCB.

20(14) LCW1ECB Pointer to first element queued. (Shifted address.)	22(16) LCWLECB Pointer to last element queued. (Shifted address.)

24(18) LCWSTAT Task and queue status.	25(19) LCWPRKEY Protection key.	26(1A) LCWLINK Pointer to next QCB on the queue. (Shifted address.)
28(1C) LCWTSKEP Task entry point (last 18 bits).		
LCWMCBD Major control block displacement.	29(1D) LCWSCHED Trigger scheduling priority.	
32(20) LCWSAVE Address of save area push-down list. (Shifted address.)		34(22) LCWLUNK Pointer to previous QCB on the queue. (Shifted address.)

36(24)	
or LCBPEPSC Subchannel of EP equivalent line. (NCP2, #)	LCBACBP Pointer to adapter control block.
40(28) LCBLTCTP Line type command table pointer (last 18 bits).	
LCBLSTAT* First line status byte.	
44(2C) LCBDVBP Pointer to device base for device currently connected over line (last 18 bits).	
LCBTYPEC* Line type code.	
48(30) LCBDBCU Pointer to the Activate or Deactivate BCU when activate line, deactivate line orderly, or deactivate group orderly is in progress (last 18 bits).	
LCBMFLAG LCB flags, or LCBLLGN LLG number.	

*Indicates a byte expansion follows.

52(34) LCBSSP Subtask sequence pointer.		54(36) LCBFEAT1* LCB features.	55(37) LCBLST2* Second line status byte.
56(38) LCBACTNS* Actions to be taken when unusual conditions arise on the line.	57(39) LCBUSER Offset to beginning of user area.	58(3A) LCBERPL Second level error recovery procedure loop limit.	59(3B) LCBERPC Second level error recovery procedure loop counter.
60(3C) LCBEDEL Duration of delay between second level ERP loops.	61(3D) LCBCOFFL Sub-block cutoff limit.	62(3E) LCBCOFFC Sub-block cutoff counter.	63(3F) LCBIOCOM* I/O communication byte.
64(40) LCBCSCNT Count of pending Invite and Contact commands for the line.		66(42) LCBRID Resource ID of the line.	

Multipoint Extension

Line Suspended Sessions QCB (LCBLSSQ)
(See QCB for Work Queues for all bit definitions.)

68(44) LCS1ECB Pointer to first element queued. (Shifted address.)		70(46) LCSLECB Pointer to last element queued. (Shifted address.)
72(48) LCSSTAT Task and queue status.	73(49) LCSPRKEY Protection key	74(4A) LCSLINK Pointer to next QCB on the queue. (Shifted address.)

*Indicates a byte expansion follows.

76(4C) LCBESOTP Address of service order table (last 18 bits).			
LCBEPAUS Pause between passes through service order table.			
80(50) LCBENAKL Negative poll response limit.	81(51) LCBESERL Service seeking scan limit.	82(52) LCBMS Maximum number of sessions allowed.	83(53) LCBAS Attempted sessions count.
84(54) LCBCS Suspended connections count.	85(55) LCBWS Connections work count.	86(56) LCBENOD Number of devices on this line.	87(57) LCBEDIG Number of devices remaining when deactivating line.
88(58) LCBSOTCT BSC/SS devices in buffer delay not quiesced count for multipoint lines.			

Switched Extension

68(44) LCBESGTP Address of primary switched group table (SGT) (last 18 bits).	
LCBEFLAG* Switched extension flags.	
72(48) LCBELCDI Address of logical connection device input (LCDI) DVB.	

*Indicates a byte expansion follows.

Byte Expansions

Offset/Field Name	Bit Pattern/ Hex Value	Contents
40(28) LCBLSTAT		First line status byte.
	1...	Line active. A line is active (can accept TP commands) from the completion of an activate line operation until the receipt by line management of a deactivate line request. A line is inactive (cannot accept TP commands) from the receipt by line management of a deactivate line request until the completion of an activate line operation.
	.1..	Line is in abnormal mode. A Reset or Deactivate is in progress for some device on this line. See LCBLST2 to determine actual operation.
	..1.	Active session.
	...1	Work scheduler idle.
	.... 1...	Service seeking in progress. Switched enable, for call-in, is active on this line.
	.... .1..	Reset immediate or deactivate line halt caused an immediate XIO to be issued on this line. See LCBLST2 to determine actual terminal operation.
	.... ..1.	OLTT in progress.
	1	OLLT in progress.
44(2C) LCBTYPEC	Byte 0	Line type code.
	.1..	Extension exists.
	..1.	The meaning of this bit is relevant only if bit 7 (switched) is one. If one, this line changes physical characteristics, via set mode, with each new telephone connection. If zero, line has same characteristic for every connection.
	...1	SDLC.
	.... x...	Mode (NCP2, #): 0=Half duplex 1=Duplex
	.... .1..	BSC line.
	.... ..1.	Multipoint line.
	1	Switched line.
48(30) LCBMFLAG		LCB flags.
	1...	Buffer delay wait.
	.1..	Critical situation message write started.
54(36) LCBFEAT1		LCB features.
	1...	Multipoint tributary.
	.1..	Point-to-point secondary.
	..1.	Dial type (NCP2, #): 1=auto 0=manual
	...1	Speed change capability (NCP2, #)
	.... 1...	Multipoint backup (NCP#)
	x	Mode switch (NCP2, #) 1=EP 0=NCP
55(37) LCBLST2		Second line status byte.
	1...	Deactivate line halt in progress.
	.1..	Deactivate line orderly in progress.
	..1.	Activate Line in progress.
	...x	Current dial method (NCP2, #): 1=auto 0=manual
	.... 1...	Monitor mode in progress. (NCP2, #)

Offset/Field Name	Bit Pattern/ Hex Value	Contents
	.... .x ..	Line mode bit 1=backup 0=normal
	.... ..x .	Monitor reset bit (NCP2, #): 1=delay monitor reset 0=reset now
	1	Line speed change in progress. (NCP2,#)
56(38) LCBACTNS		Actions to be taken when unusual conditions arise on the line.
	1...	Shutdown of this line pending.
	.x..	Deactive line orderly. (DLO) Error status (when active). 1=Error-terminate DLO 0=No error-process DLO
	..1.	Service suspended sessions.
	...1	Single service seek.
	.... 1...	Respond to current read with RVI.
	.... .x ..	Negative poll response limit reached: 1=break logical connection 0=no break
	.... ..x .	Negative poll response limit reached: 1=reschedule Read 0=terminate
	1	Monitor line for attention or disconnect. (NCP2, #)
63(3F) LCBIOCOM		I/O communication byte.
	1...	Partial block sent.
	.1..	Session suspension required.
	..1.	Send ID.
	...1	Transparent text selection.
	.... 1...	End of text block (ETB) received.
	.... .1..	Conversational mode.
	.... ..1.	BHR point 2 execution required after I/O is completed.
	1	Last block ended with ETX.
68(44) LCBEFLAG		Switched extension flags.
	1...	Part of a switched group.
	.1..	Call-in line.
	..1.	Call-out line.
	...1	Telephone connection exists.

Program: NCP

Size in bytes: 16(10) per entry; number of entries defined at NCP generation.

Created by: NCP generation, one for each start-stop line.

Pointer to LCST: SYSLCSP field in HWE.

Function: Used to change ACB control fields for Multiple Terminal Access (MTA).

Entry Format

0(0) LCSTSPED Line speed.		2(2) LCSTLGT Line group table address.	
4(4) LCSTRTDT Receive translate decode table address.		6(6) LCSTTTDT Transmit translate decode table address (high order byte). The low-order byte is the character to be translated.	7(7) LCSTSMDE Set mode serial data (SDF) constant.
8(8) LCSTSTBL State table address.		10(A) LCSTRTRY Text error retry limit.	11(B) LCSTBCUT Buffer cutoff limit (receive).
12(C) LCSTCRTN Carriage return rate factor (SS only).	13(D) LCSTLSIZ Maximum print line size (SS only).	14(E) LCSTBG Background table address.	

Program: PEP, EP

Size in bytes: Variable (8 bytes per GROUP macro).

Created by: NCP and EP generation.

Located: Immediately following CCBs.

Updated by: CCB

Referenced by: LCP, ICP

Function: Contains information about a group of lines. It contains an entry for each GROUP macro coded by the user.

0(0) LGTREPLY Reply time-out in tenths of a second.	1(1) LGTTET Text time-out in tenths of a second.	2(2) LGTCHARS Ending TTY character.	3(3) (LGTEOB)**
4(4) LGTLINE* Line information byte.	5(5) LGTEOT End of transmission for RPQ and WTTY (optional).	6(6) LGTENDCR* TTY end character controls	7(7) Reserved

*Indicates a byte expansion follows.
**If bit 3 of byte LGTLINE is off, this byte contains the EOB character. If bit 3 of LGTLINE is on, this byte contains the second ending TTY character.

Byte Expansion

Offset/Field Name	Bit Pattern/ Hex Value	Contents
4(4) LGTLINE		Line information byte.
	...x	Presence of TTY ending characters: 0=present 1=not present
	.... x...	Data character detect security 0=Security (Start-Stop lines) 1=No security (BSC)
	.... .x..	Line type: 0=switched 1=non-switched
	.... ..x.	XON character control: 0=utilize 1=inhibit
	x	XOFF character control: 0=utilize 1=inhibit
6(6) LGTENDCR		TTY end character controls.
	1...	FIGS-X-LTRS sequence for EOT. The value of X is byte 5 (LGTEOT).
	.1..	Four character sequence for EOT. The value of the character is in byte 5 (LGTEOT).
	..1.	FIGS-Y sequence for EOB. The value of Y is in byte 3 (LGTEOB).
	...1	Four character ending sequence for EOB. The value of the character is in byte 3 (LGTEOB).
	.... ..1.	Five-character transmit-turnaround-delay flag.
	1	Ten-character-transmit-turnaround-delay flag.

Program: NCP

Size in bytes: Variable depending on line type.

Created by: NCP generation.

Pointer to LGT: CCBLGPT field in CCB.

Function: Contains line control parameters.

0(0) LGTTYPE* Terminal type identification.	1(1) LGTSHTAP Shoulder tap time-out state change mask.	2(2) LGTENDR1 Receive text status/ERP vector.	
4(4) LGTENDR2 Receive text reply status/ERP vector.		6(6) LGTENDR3 Receive control reply status/ERP vector.	
8(8) LGTTIMEA** Control time-out command (error time-out).	9(9) LGTTIMEB** Receive text (long) time-out command.	10(A) LGTTIMEC** Transmit time-out command (shoulder tap).	11(B) LGTTIMED** Response time-out command.
12(C) LGTXIPCF Transmit initial LCD/PCF value.	13(D) LGTRIPCF Receive initial LCD/PCF value.	14(E) LGTINST Initial level 2 state mask.	15(F) LGTCMRTY Control mode ERP retry limit.
16(10) LGTCMD Pointer to command decode table.		18(12) LGTLATO Remote activity time field. (NCP#)	
		18(12) LGTINCHR Initial control character.	19(13) LGTCOUNT Write EOT command initial control character count.

Type 1 Scanner Extension

20(14) LGTMASK Character size tag mask. (See BCBMASK for bit definitions).	22(16) LGTLCPCF LCD/PCF for type 1 scanner. (See BCBLCPCF for bit definitions.)	23(17) LGTBREAK Start-stop transmit break mask. (See BCBBMASK for bit definitions.)

*Indicates a byte expansion follows.

**Error time-outs are expressed as X'Cx'. Go to TVS DSECT and displace into TVS by a value of X for timer values. Shoulder tap time-outs are X'8x'.

24(18)** LGTWACKL BSC received WACK limit value. - - - - - - - or LGTSELG Start-stop selection address length.	25(19)** LGTTTD BSC received TTD limit value. - - - - - - - or LGTPOLLG Start-stop poll address length.	26(1A)** LGTSYN BSC SYN character line code. - - - - - - - or LGTPADCT Start-stop motor start pad count.	27(1B)** LGTRIST Receive initial state set after connect.

BSC Line and EBCDIC Characters

28(1C)** LGTDLEEB DLE.	29(1D)** LGTETBE ETB EBCDIC.	30(1E)** LGTDLEOT DLE.	31(1F)** LGTEOTE EOT EBCDIC.
32(20)** LGTDLES DLE.	33(21)** LGTSTXE STX EBCDIC.	34(22)** LGTDLEIB DLE.	35(23)** LGTITBE ITB EBCDIC.
36(24)** LGTDLE0 DLE.	37(25)** LGTACK0 ACK0.	38(26)** LGTDLE1 DLE.	39(27)** LGTACK1 ACK1.
40(28)** LGTDLER DLE.	41(29)** LGTRVIE RVI EBCDIC.	42(2A)** LGTDLEEQ DLE.	43(2B)** LGTENQE ENQ EBCDIC.
44(2C)** LGTNAKE NAK EBCDIC.	45(2D)** LGTSOHE SOH EBCDIC.	46(2E)** LGTDLEEX DLE.	47(2F)** LGTETXE ETX EBCDIC.
48(30)** LGTDLEW DLE.	49(31)** LGTWACK WACK.	50(32)** LGTSOHA SOH ASCII.	51(33)** LGTSTXA STX ASCII.
52(34)** LGTETBA ETB ASCII.	53(35)** LGTETXA ETX ASCII.	54(36)** LGTEOTA EOT ASCII.	55(37)** LGTITBA ITB ASCII
56(38)** LGTENQA ENQ ASCII.	57(39)** LGTNAKA NAK ASCII.	58(3A)** LGTDLEA DLE ASCII.	

**Displacement will be four bytes less if type 1 scanner is not present.

Start/Stop Line and EBCDIC Control/Characters
(Label used dependent on terminal type.)

28(1C)** LGTUPPER Upshift.	29(1D)** LGTETB2 Circle B.	30(1E)** LGTLOWER Down shift. or LGTEOT3 Letters.	31(1F)** LGTEOT2 Circle C or H. or LGTTEOT EOT
32(20)** LGTEOT1 Circle C or figs. or LGTWFIG Figs. or LGTCIRC Circle C.	33(21)** LGTCIRD Circle D. or LGTWLTR Letters. or LGTTNUL Null. or LGTSTX1 Space or carriage return.	34(22)** LGTVTAB Vertical tab. or LGTWNULL Null. or LGTTVT Vertical tab.	35(23)** LGTHTAB Horizontal tab. or LGTTHT Horizontal tab.
36(24)** LGTLF Line feed. or LGTWTAB Tab. or LGTTLF Line feed	37(25)** LGTCRLF Carriage return. or LGTWCR Carriage return. or LGTTCR Carriage return. or LGTCR Carriage return or line feed.	38(26)** LGTSPACE Space.	39(27)** LGTBKSP Backspace. or LGTSTX2 Carriage return or line feed.
40(28)** LGTPAD Pad. or LGTTPAD Pad. or LGTBPAD Pad. or LGTWPAD Pad.	41(29)** LGTIDLE Idle. or LGTWEOB1 Idle. or LGTSTX3 Idle.	42(2A)** LGTSPEC (Reserved). or LGTWEOB2 EOB sequence.	43(2B)** LGTPRC Prefix. or LGTTENQ ENQ. or LGTWEOB3 ENQ.

**Displacement will be four bytes less if type 1 scanner is not present.

44(2C)** LGTCIRN NAK. - - - - - - - or LGTWEOB4 NAK.	45(2D)** LGTRES Restore. - - - - - - - or LGTWEOT1 EOT1.	46(2E)** LGTRSTP Reader stop - - - - - - - or LGTTXOFF XOFF control character - - - - - - - or LGTWEOT2 EOT2.	47(2F)** LGTETB1 Circle B. - - - - - - or LGTCIRB Circle B. - - - - - - - or LGTTXON XON control character - - - - - - - or LGTWEOT3 EOT3.
48(30)** LGTCIRY Circle Y - - - - - - - or LGTWEOT4 EOT4.	49(31)** LGTBYP Bypass - - - - - - - or LGTWXCH1 Ending character	50(32)** (Reserved) - - - - - - - or LGTWXCH2 Ending character	51(33)** LGTPF Punch off. - - - - - - or LGTWXCH3 Ending character
52(34)** LGTPON Punch on.	53(35)** LGTDELET Delete.	54(36)** LGTESLSH Slash. (EBCDIC)	55(37)** LGTESPCE Space (EBCDIC)

**Displacement will be four bytes less if type 1 scanner is not present.

Byte Expansions

Offset/Field Name	Bit Pattern/ Hex Value	Contents
0(0) LGTTYPE		Terminal type identification.
	X'00'	2741.
	X'02'	2740 Basic.
	X'04'	2740 Station Control.
	X'06'	2740 Transmit Control.
	X'08'	2740 Station Control with checking.
	X'0A'	2740 Transmit Control with checking.
	X'0C'	2740 with checking.
	X'0E'	2740 Model 2 with checking.
	X'14'	2740 Model 2 without checking.
	X'1C'	1050.
	X'1D'	MTA.
	X'20'	TTYI-B (83B3).
	X'22'	TTYII.
	X'24'	TTY World Trade.
	X'26'	TTYI-A (115A).
	X'4A'	BSC EBCDIC point-to-point station.
	X'4C'	BSC EBCDIC control station.
	X'4E'	BSC EBCDIC tributary station.
	X'6A'	BSC ASCII point-to-point station.
	X'6C'	BSC ASCII control station.
	X'6E'	BSC ASCII tributary station.
	X'8C'	SDLC Primary station.
	X'8E'	SDLC Secondary station.

Program: NCP#

Size in bytes: 40(28)

Created by: NCP Generation. One for each link.

Pointer to LKB: RVT

Function: Contains fields for scheduling link operation and for maintaining link status information.

Queue Control Block (See QCB for input queues for bit definition)

0(0) LKW1ECB Pointer to first element queued (Shifted address).		2(2) LKWLECB Pointer to last element queued (Shifted address).
4(4) LKWSTAT Task and queue status.	5(5) LKWPRKEY QCB ID flag and task protect key.	6(6) LKWLINK Pointer to next QCB on the queue (Shifted address).
8(8) LKWTSKEP Task Entry Point (Last 18 bits).		
LKWMCBD Major control block displacement.	LKWSCHED Task dispatching priority.	
12(C) LKWSAVE Address of save area pushdown list (Shifted address).		14(E) LKWLUNK Pointer to previous QCB on queue (Shifted address).

16(10 LKBNWADR Network address of link.		18(12) LKBSTAT* Status of link.	19(13) LKBTYPE* Link type.
20(14) LKBSVTD SVT displacement. (Remote only)	21(15) LKBSWST* Switched status flags.	22(16) Reserved.	23(17) LKBSNQC Stations not quiesced count. (ANS)
24(18) LKBTCHN LKB chain pointer. Points to an alternate link's LKB. (Last 18 bits.)			
LKBBLMST* Remote link backup monitor and status			
28(1C) Reserved			
36(24) LKBACBP Address of adapter control block.			

*Indicates a byte expansion follows.

Byte Expansion

Offset/Field Name	Bit Pattern/ Hex Value	Contents
18(12) LKBSTAT		Status of link.
	1	The link is active; an Activate Link command has been successfully processed.
	. 1	Activate Link in progress.
	. . 1	Deactivate Link in progress.
	. . . 1	Link quiesce pending. (Auto network shutdown)
	. . . . . 1 .	OLTT in progress.
	 1	OLLT in progress.
19(13) LKBTYPE		Link type.
	1	Leased.
	. 1	Switched.
	. . 1	One or more clusters attached to this link.
	. . . 1	One or more remote controllers are attached to this link.
	. . . . 1 . . .	One or more terminals are attached to this link.
	. . . . . 1 . .	Secondary link.
21(15) LKBSWST		Switched status flags.
	1	Connection exists.
	. 1	Link in answer mode.
	. . 1	Dial in progress.
	. . . 1	Switched Enable pending.
24(18) LKBBLMST		Remote backup link monitor and link status.
	1	Link to local controller.
	. 1	The current link to the local controller.
	. . 1	Start or continue monitoring links to the local controller.
	. . . 1	Currently monitoring links to the local controller.

Program: NCP1, NCP2

Size in bytes: 12(C) plus 4 bytes for each line in the line group.

Created by: NCP generation.

Pointer to LLG: RVTRP field in RVT.

Function: Consists of a line scan parameter area, plus one pointer to the LCB for each line in the line list.

0(0) LLGFLAGS* Logical line group flags.	LLGBCUP Pointer to current group (last 18 bits).	
4(4) LLGNOL Number of lines in group.		6(6) LLGLTG Number of lines to go.
8(8) LLGOSET Current offset into line table.		
12(C) LLGPTR Pointer to the LCB for the first line in this group. Pointers to subsequent lines in the group follow this field. If this is the system (LLGFLAGS, bit 0 on), this field is set to zero and no other pointers follow it.		

*Indicates a byte expansion follows.

Byte Expansions

Offset/Field Name	Bit Pattern/ Hex Value	Contents
0(0) LLGFLAGS		Logical line group flags.
	1	This is the LLG for the system.
	.1	LLG in use.
	. . 1	At least one line requires waiting before group operation complete.

Program: NCP, EP

Size in bytes: 16(10) for each line.

Located: Starts at storage location X'800'.

Created by: NCP and EP generation.

Referenced by: Level 2 routines.

Function: Allows the level 2 routines to find a line's CCB when only the line address is known.

0-15(0-F)	BCB for the first line.
16-31(10-1F)	BCB for the second line.

.
.
.
.
.
.
.
.

n-n+F	BCB for the last line.

LINE VECTOR TABLE (for Type 2 scanner)

LNVT (Type 2)

Program: NCP, EP

Size in bytes: Variable, depending on number and type of communication scanners attached and on the highest line interface address specified.

Located: Starts at storage location X'840'.

Created by: NCP and EP generation.

Referenced by: EP and NCP level 2 routines.

Function: Allows the level 2 routines to find a line's CCB when only the line address is known.

0(0) Address pointer to corresponding ACB (NCP) or CCB (EP).	2-n Two bytes for each line interface address.

Program: NCP

Size in bytes: 32(20)

Created by: NCP generation.

Pointer to LTCB: CXTCCT address at CXBCTRC in link edit map, or SYS LTB field in HWE. The LTCB is located 36 (24) bytes beyond this address.

Function: Contains the pertinent parameters for the line trace function. For duplex operation two LTCBs are required - one for transmit leg and one for the receive leg.

0(0) CCTL2 Address of normal level 2 character service routine when trace first started on this line.	2(2) CCTSTATE References the pseudo state address table used to invoke line trace.	
4(4) CCTACB Pointer to the ACB for the line being traced.	6(6) CCTCUT Buffer limit per line trace control block.	7(7) CCTMAXBF Maximum number of buffers that can be transferred across the channel with one host Read.
8(8) CCTSAVE Save area for link address.	10(A) CCTTIME Timer control field for line trace.	
	CCTTMOUT Interval timer field for line trace.	11(B) CCTTENTH Tenth second timer started when trace began.
12(C) CCTBCB Address of vector to this line's ACB.	14(E) CCTCHAR Count of the number of buffer locations remaining in the current buffer.	
16(10) CCTHDBUF Pointer to first buffer in current chain (last 18 bits).		
CCTBFMAX Maximum number of buffers to be filled before transferring diagnostic units to host.		
20(14) CCTITIME Initial value of interval timer field for line trace.	21(15) Unused.	22(16) CCTEPBAR BAR for EP line (NCP2)
24(18) CCTDATA Address of next diagnostic unit to be stored (last 18 bits).		
CCTBFSZD Number of bytes in full trace buffer.		
28(1C) CCTSTART Pointer to beginning of current buffer (last 18 bits).		

*Indicates a byte expansion follows.

LINE TRACE CONTROL BLOCK (NCP#)

Program: NCP

Size in bytes: 72(48)

Created by: NCP generation

Pointer to LTCB: CXTCCT address at CXBCTRC in link edit map, or SYSLTB field in HWE. The LTCB is located 36(24) bytes beyond this address.

Function: Contains the pertinent parameters for the line trace function. For duplex operation two LTCBs are required—one for the transmit leg and one for the receive leg.

0(0) CCTL2 Address of normal level 2 character service routine when trace first started on this line.	2(2) CCTACB Pointer to the ACB for the line being traced.
4(4) Reserved	6(6) CCTWORK Timer work entry for CCT.
8(8) CCTLINK Pointer to the next ACB in level 2-3 chain, since the CCB is queued as the dummy ACB.	10(A) CCTTIME Timer control field for line trace. CCTTMOUT Interval Timer field for line trace. 11(B) CCTTENTH Tenth second timer started when trace began.
12(C) CCTBCB Address of vector to this line's ACB.	14(E) CCTFLAG* CCTFLAGs field for CSB.
16(10) CCTSCNT Field to accumulate status byte count.	18(12) CCTCHAR Count of the number of buffer locations remaining in the current buffer.
20(14) CCTDCNT Field to accumulate data count.	22(16) CCTEND1 Line status for queuing.
24(18) CCTDATA Address of the next diagnostic unit to be stored. CCTBFSZD Number of bytes in full trace buffer.	
28(1C) CCTSTART Pointer to the beginning of the current buffer. CCTRTT* Line type	

32(20) CCTITIME Initial value of interval timer field for line trace.	34(22) CCTEPBAR BAR for EP line.	
36(24) CCTHDBUF Pointer to first buffer in current chain. CCTBFMAX Maximum number of buffers to be filled before transferring diagnostic units to the host.		
40(28) CCTL3 Address of level 3 copy routine	42(2A) CCTCUT Buffer limit per line trace block.	43(2B) CCTMAXBF Maximum number of buffers per BTU on channel.
44(2C) CCTSAVE Save link address.	46(2E) CCTCTL Control flags. Must always equal zero.	
48(30) CCTESTAT Expected ending status.	50(32) CCTCHR1 Number of buffer locations remaining in the buffer during copy.	
52(34) CCTDATA1 Contains the address of the next data position when control is passed to the copy routine.		
56(38) CCTSTRT1 Pointer to the current copy buffer.		
60(3C) CCTDDATA Save field for the pointer to the current data character to be copied during transfer of buffers because of buffer cutoff.		
64(40) CCTDSTRT Save field which contains the current data buffer pointer during transfer of buffers.		
68(44) CCTDSAVE Data pointer save field during transfer of buffers. CCTDCHR Save field which contains the residual data count during transfer.		

*Indicates a byte expansion follows.

Byte Expansion

Offset/Field Name	Bit Pattern/ Hex Value	Contents
14(E) CCTFLAG		CCTFLAGs field for a type 3 scanner during copy.
	x	1=Receive 0=Transmit
	.x	1=BSC 0=SDLC
	. .x	1=Branch and link from CXBCOPY3 0=Not
	. . .x	1=Currently processing insert function 0=Not
	. . . . x . . .	1=Leading Graphics transmitted 0=Not
	. . . . .x . .	1=Buffer request for BCC store 0=No buffer store request
	. . . . . .x .	1=Level 3 copy active 0=Not active
	x	1=ITB received (Adjust for BCC) 0=Not ITB
28(1C) CCTRTT		Line type
	X'00'	Half-duplex
	X'80'	Duplex
	X'C0'	Duplex-transmit leg

LINE TEST CONTROL BLOCK

LTS (NCP1, 2)

Program: NCP1, NCP2

Size in bytes: 36(24)

Created by: NCP generation.

Pointer to LTS: Located at CXTLTS in CXSGMISC.

Function: Contains control information for panel test operations.

0(0) LTSCTL* Control byte.	1(1) LTSPDSYN PAD or SYN character for this line.	2(2) LTSMSDF The system generated Set Mode SDF.	3(3) LTSXTPCF The system generated LCD value.
4(4) LTSLNAD The line address of the line being tested.		6(6) LTSSVL2 The saved CCBL2 for the line being tested.	
8(8) LTSDIALL Buffer for non X'FF' receive data characters or autocall dial digits. (16 bytes)			
24(18) DLIMETER Counter for non X'FF' data characters when receiving.		26(1A) DIGCNTR Counter for autocall dial digits and receive data characters.	
28(1C) LTSACLN Autocall line address.		30(1E) LTSL2 Address of entry point for level 2 interrupt.	
32(20) LTSSVL3 Saved level 3 address used in a dial operation.		34(22) ALLONES Constant of all ones.	

*Indicates a byte expansion follows.

Byte Expansions

Offset/Field Name	Bit Pattern/ Hex Value	Contents
0(0) LTSCTL		Control field.
	1... .... .x..	Line is initialized. 1 = duplex 0 = half duplex
	..1. ....1 ....x...	Autocall line. Monitor-ring-indicator is installed. 1 = Command has not ended. 0 = Command has ended.
	1	Emulation line.

LINE TEST CONTROL BLOCK

Program: NCP#
Size in bytes: 56(38)
Created by: NCP generation.
Pointer to LTS: Located at CXTLTS in CXSGMISC.
Function: Contains control information for line test operations.

0(0) LTSCTL* Control byte 1.	1(1) LTSPDSYN PAD or SYN character for this line.	2(2) LTSSTMD The system generated Set Mode SDF.	3(3) LTSLCD The system generated LCB value.
4(4) LTSXLAD The line address of the line being tested.		6(6) LTSRLAD Duplex, receive-line address.	
8(8) LTSRDATP*** Receive buffer address.			
LTSDIALL Buffer for receive data characters or auto-call dial digits. (16 bytes)			
24(18) LTSNFCNT** Count for nonX'FF' data characters when receiving.		26(1A) LTS0CNT Counter for non X'00' data characters when receiving.	
28(1C) LTSERCNT SDLC receive error counter. Reserved***		30(1E) LTSDCNT Counter for auto-call dial digits and receive data characters.	31(1F) LTSTURN Transmit turn LCD/PCF.
32(20) LTSACLN Auto-call line address.		34(22) LTSXL2 Transmit level 2 pointer.	
36(24) LTSRL2 Receive level 2 pointer.		38(26) LTSDATAP Transmit buffer pointer.	
40(28) LTSRCCI Rcv. compare character 1	41(29) LTSRCC2 Rcv. compare character 2	42(2A) LTSRCC3 Rcv. compare character 3	43(2B) LTSWAPI Transmit swap buffer 0 compare character
44(2C) LTSWAP2 Transmit swap buffer 1	45(2D) LTSXEND0 Buffer 0 residual transmit count	46(2E) LTSXCNT0 Buffer 0 total transmit count	47(2F) LTSXEND1 Buffer 1 residual transmit count
48(30) LTSXCNT1 Buffer 1 total transmit count	49(31) LTSRCVMD* Receive options	50(32) LTSBCC Received BCC characters	
52(34) LTSBUFSV*** Receive buffer save address.		54(36) LTSCTL2* Control byte 2	Reserved
LTSNLCHR** Next to last RCV character	53(35) LTSLCHR** Last received character		

*Indicates a byte expansion follows.
**Type 2 communication scanner only
***Type 3 communication scanner only

Byte Expansions

Offset/Field Name	Bit Pattern/ Hex Value	Contents
0(0) LTSCTL		Control byte:
	x	1=Initialized. 0=Not initialized.
	.x	1=Command has not ended. 0=Command has ended.
	. .x	1=Auto call. 0=No auto call.
	. . .x	1=Monitor-ring-indicator. 0=No monitor-ring-indicator.
	. . . . x . . .	1=Duplex adapter. 0=Half-duplex adapter.
	. . . . .x . .	1=SDLC 0=Not SDLC
	. . . . . .x .	1=CCBL2 is set-up. 0=CCBL2 is not set-up.
	x	1=EP line. 0=NCP line.
49(31) LTSRCVMD	xxx	(Reserved).
	. . .x	1=Two character compare on receive. 0=One character compare.
	. . . . x . . .	(Reserved)
	. . . . .1 . .	Modem test active.
	. . . . . .1 .	BSC BCC accumulation on RCV.
	1	SDLC BCC accumulation on RCV.
54(36) LTSCTL2		Control byte 2
	x	1=Line on type 3 scanner 0=Line not on type 3 scanner
	.x	1=New sync 0=No new sync
	. .x	1=NRZI mode 0=Non NRZI mode
	. . .x	1=Scan received data 0=No scan (Modem test, only)

Program: NCP#

Size in bytes: 53(35)

Created by: NCP generation LU macro.

Pointer to LUB: RVT (leased link), LUV (switched link)

Function: Provides QCBs, status, and control information for a logical unit.

LU/SSCP Process Queue Control Block *

0(0) LUL1ECB Pointer to first element queued (Shifted address).		2(2) LULLECB Pointer to last element queued (Shifted address).
4(4) LULSTAT* Task and queue status.	5(5) LULPRKEY* QCB ID flag and task protect key.	6(6) LULLINK Pointer to next QCB on the queue (Shifted address).
8(8) LULTSKEP Task entry point (Last 18 bits).		
LULMCBD Major control block displacement.	LULSCHED Task dispatching priority.	
12(C) LULSAVE Address of save area pushdown list (Shifted address).		14(E) LULLUNK Pointer to previous QCB on queue (Shifted address).

APPL/LU Process Queue Control Block*

16(10) LUA1ECB Pointer to first element queued (Shifted address).		18(12) LUALECB Pointer to last element queued (Shifted address).
20(14) LUASTAT Task and queue status.	21(15) LUAPRKEY QCB ID flag and task protect key.	22(16) LUALINK Pointer to next QCB on the queue (Shifted address).
24(18) LUATSKEP Task entry point (Last 18 bits).		
LUAMCBD Major control block displacement.	LUASCHED Task dispatching priority.	
28(1C) LUASAVE Address of save area pushdown list (Shifted address).		30(1E) LUALUNK Pointer to previous QCB on queue (Shifted address).

*See QCB for Input Queues for all bit definitions.

32(20) LUBCUB Address of Common Physical Unit Block (CUB) (Last 18 bits)			
LUBCSTAT Reserved.			
36(24) LUBNALU Network address of this logical unit.		38(26) LUBTCNT Transmission counter.	
40(28) LUBCPSET* Session control primary status.	41(29) LUBCSSET* Session Control secondary status.	42(2A) LUBNAPL Network address of application currently in session	
44(2C) LUBAPSET* Application primary status.	45(2D) LUBASSET* Application secondary status.	46(2E) LUBM Pacing parameter M.	47(2F) LUBN Pacing parameter N.
48(30) LUBPC Pacing count.	49(31) LUBLALU Local address of logical unit.		

*Indicates a byte expansion follows.

Terminal Node (type 1 PU) Extension

The following seven halfwords are for terminal node sequence number management.

	50(32) LUBAOSLU SSCP-LU expedited outbound identification.
52(34) LUBSOSLU SSCP-LU normal outbound identification.	54(36) LUBAOLLU LU-LU expedited outbound identification.
56(38) LU-LU normal inbound sequence number.	58(3A) LUBSOLLC LU-LU normal outbound check.
60(3C) LUBSOLLS LU-LU normal outbound save.	62(3E) LUBIDGN Identification number gen.

Byte Expansions

Offset/Field Name	Bit Pattern/ Hex Value	Contents
40(28) LUBCPSET		SCP primary status:
	1	Session established.
	.1	Exception condition exists.
	. . .1	Processing Activate Logical.
	. . . . 1 . . .	Processing Deactivate Logical.
41(29) LUBCSSET		SCP secondary status:
	1	Processing Clear.
44(2C) LUBAPSET		Application primary status:
	1	Session established.
	.1	Exception condition exists.
	. . .1	Processing Bind.
	. . . . 1 . . .	Processing Unbind.
	. . . . .1 . .	SDLC/BSC path function. (LUB-4 contains the address of the SPB)
45(2D) LUBASSET		Application secondary status:
	x	1=Processing Clear. 0=Not processing.
	.x	1=Awaiting pacing from LU. 0=not waiting.
	. .x	1=Pace required by host. 0=not required.
	. . .1	Null BB PIU pending.
	. . . . 1 . . .	INB
	. . . . .1 . .	BB PIU pending.
	. . . . . .1 .	PBID pending.
	1	Bracket state management mode.

Program: NCP#

Size in bytes: One 4-byte entry for each logical unit that can be assigned to a switched SDLC link (specified at NCP generation).

Created by: NCP generation.

Pointer to LUV: CUBLUB field in CUB.

Function: Used to locate the logical unit control blocks (LUBs) that are assigned to a switched SDLC link.

LUV Entry

0(0) LUVLUB Pointer to LUB. (Last 18 bits)		
LUVLA Local address of logical unit.	1(1) LUVFLGS* Status flags.	

*Indicates a byte expansion follows.

Byte Expansions

Offset/Field Name	Bit Pattern/ Hex Value	Contents
1(1) LUVFLGS		LUV status flags.
	1...	Last entry in LUV.
	.1..	Entry in use.

Program: NCP#

Size in bytes: 36(24)

Created by: NCP Generation

Pointer to LXB: By LKBACBP field in LKB

Function: Contains the status of SDLC link operations

0(0) LXBIMCTL* Immediate control command flags.	1(1) LXBCMAND* I/O command.	2(2) LXBCMODS* Command modifiers field.	
4(4) LXBEXTST* Extended error status.	5(5) LXBRBLUC Received BLU command field.	6(6) LXBSTAT* Command ending status field.	7(7) LXBSTATC* Completion code byte of status.
8(8) LXBEREST First error extended status, see LXBEXTST.	9(9) LXBRTYCT ERP retry count.	10(A) LXBERST First error status. Set upon first recoverable error. or LXBLTSM SCF mask field. (when OLLT is active).	11(B) LXBHSTAT Hold SDLC status.
12(C) Space for OLTTIOB/XIO commands. or LXBAEXP Address expected in response	or LXBSTYPE Station polled CUB/SCB type field	14(E) LXBDATAP Pointer to first buffer of data received. or LXBTCBPT Pointer to OLLT control block.	
16(10) LXBFNLPT Final buffer pointer. or LXBPOLLT Poll Cycle start time or LXBLTCT Transmit or Receive count (OLLT).		18(12) LXBINPUT Input control-data pointer to command reject (CMDR) data received. or LXBLTL2 Secondary CCBL2 (when OLLT active).	
20(14) LXBQOFF L2/L3 block overrun queue head pointer.	21(15) Space for OLTT IOB/XIO commands	22(16) LXBQON L2/L3 block overrun queue tail pointer. or LXBLTLAB Pointer to lookahead buffer (OLLTLAB)	
24(18) LXBLKBP Pointer to line/link control block. (shifted address).		26(1A) LSBBKSIZ Received block size (number of data characters stored).	

*Indicates a byte expansion follows.

28(1C) LXBPOLL Pointer to current SOT entry being polled. (Half-duplex and duplex receive leg, primary stations only.)		
LXBCPCMD Contact poll command executed.		30(1E) or LXBRACBP Pointer to receive leg of a duplex link (transmit leg only).
32(20) LXBSEL Output SOT pointer-pointer to current station that I format data was sent to (primary stations only).		
LXBCPOLL Contact poll offset into SOT.		34(22) or LXBXACBP Pointer to transmit leg of a duplex link (Receive leg only).

Byte Expansions

Offset/Field Name	Bit Pattern/ Hex Value	Contents
0(0) LXBIMCTL		Immediate control command flags:
	X'80'	Reset Immediate issued.
		Set Mode Commands (for idle or busy lines):
	X'04'	Read line type.
	X'06'	Set text error retry limit.
	X'10'	Set receive buffer cutoff factor.
	X'12'	Start line trace.
	X'14'	Stop line trace.
	X'18'	Set operation link.
	X'1A'	Reset operational link.
		Set Mode Commands (idle lines only):
	X'05'	Set line adapter interface parameters.
	X'07'	Set line control procedure.
1(1) LXBCMAND		LXB command:
	X'00'	No I/O occurred
	X'83'	Disable.
	X'8D'	Enable.
	X'8F'	Dial.
	X'30'	Run SDLC link.
	X'32'	Run Initial (remote NCP)
2(2) LXBCMODS	Byte 0	Command modifiers:
	x...	1=Suppress ending a new command due to outstanding status. 0=Immediate end to new command when status is outstanding.
	.x..	1=No retry. 0=Retry.

Offset/Field Name	Bit Pattern/ Hex Value	Contents
	...x	1=Immediate retry if errors while normal polling. 0=If errors, retry at next normal poll cycle.
	x	1=Do not release transmitted buffers. 0=Release transmitted buffers after ACK.
	Byte 1	
	x...	1=Perform command reset step first. 0=Normal command execution.
4(4) LXBEXTST		Extended error status.
	x...	1=Overrun. 0=normal.
	.... x...	1=Block overrun occurred. 0=No block overrun occurred.
	.... ..1.	Abort received.
	1	Monitor count overflow. (If more than 64 temporary station errors occur.)
6(6) LXBSTAT		Status equates:
	1...	Extended error status.
	.1..	Format exception (invalid SDLC format).
	..1.	Sync check.
	...1	Block data check error. SDLC poll/final bit.
		Run command error exception phase field:
	.... 000.	No errors.
	.... 001.	Poll type is 'RR'.
	.... 010.	Poll type is 'RNR'.
	.... 011.	Poll type is 'NS'.
	.... 100.	Command not executed because of outstanding status.
	.... 101.	Error while sending text (I-format).
	.... 110.	Error while sending normal polling or response (S-format).
	.... 111.	Error while sending NS control sequence.
7(7) LXBSTATC		Completion code first status byte:
	000.	Normal final status: control information received in I or S-format.
	001.	Normal final status: data received in I-format.
	011.	Normal final status: data received in NS-format.
	100.	Special 0 final status.
	101.	Special 1 SDLC final status.
	111.	Hardware error.
		Normal final status(bits 0-2=000,001,011)
	...0 000.	Time-out (something received).
	...0 001.	SDLC command reject.
	...0 010.	Buffer cutoff.
	...0 110.	Partial ACK (RR) or negative ACK.
	...0 111.	Reject received.
	...1 010.	End of block (I-format).
	...1 110.	Positive ACK (RR).
	...1 111.	Wait ACK (RNR).

Offset/Field Name	Bit Pattern/ Hex Value	Contents
	100.	Special 0 final status (special status or control information received in NS format):
	...0 000.	Timeout (nothing received).
	...0 001.	Command reject.
	...0 010.	Buffer pool depleted.
	...0 110.	Reset.
	...0 111.	Invalid address received in BLU from secondary.
	...1 110.	Disabled.
	...1 111.	Enabled.
	101.	Special 1 SDLC final status (control information received in S or I format):
	...0 000.	Timeout with only flags received.
	...0 001.	Received invalid command.
	...0 010.	Received invalid N (R) in I or S format.
	...0 011.	Link activity time-out. (Secondary only).
	...0 100.	Received DISC.
	...0 110.	Received RQI. (This bit configuration also represents SIM in CCBSTAT1.)
	...1 000.	Record statistics.
	...1 001.	Received SNRM.
	...1 011.	Received ROL.
	...1 100.	Received SIM. (SIM is represented by ...0 110. in CCBSTAT1.)
	...1 110.	Received non-sequenced ACK SDLC response.
	...1 111.	Received non-sequenced XID SDLC response.
	111. ...	Hardware/user error final status:
	...0 000.	User Error – MTA unique. 1. Code and terminal have been identified, but user has not defined them as part of the MTA line. 2. User has supplied invalid LCST parameter, such as non-existant line speed.
	...0 010.	Communication Scanner Check – not currently in use.
	...0 100.	Adapter Check – 1. Timer has detected no level 2 interrupt when at least one was expected. 2. Modem self-test failed to get a level 2 interrupt after placing the PCF in turnaround. 3. Enable or dial failed to get a level 2 interrupt after setting the PCF to set mode.
	...0 101.	Adapter Feedback Check – 1. Timer detects an LCD of X'F', which results from a hardware-detected error within the adapter. 2. Improper SYSGEN about the adapter in use. 3. Stop bit error on a BSC line.

Offset/Field Name	Bit Pattern/ Hex Value	Contents
	. . . 0 110 .	Equipment Check – not currently in use.
	. . . 1 000 .	Modem error – Set when the SCF modem error bit is on. 1. Occurs when DSR drops during a transmit or receive operation. 2. Can be set by the timer. 3. Set if CTS drops while transmitting.
	. . . 1 001 .	Transmit Clock or CTS Failure – 1. During enable or write control operation, a Level 2 interrupt failed to follow line turnaround. 2. During enable on a full duplex line, CTS failed to come up. 3. Time-out occurs with PCF of transmit initial (8).
	. . . 1 010 .	DSR Turn On Check – DSR fails to come up during an enable or dial operation.
	. . . 1 100 .	DSR Turn Off Check – DSR fails to drop during a disable operation.
	. . . 1 110 .	Auto call check – 1. Initial dial PCF 'F' sees ACR, DLO, COS, or PND up. 2. Dial PCF '4' sees ACR, COS, or PND up.
	1111 1111	Program Failure – 1. Line I/O code completed in an impossible status, (e.g. ENQ on S/S line) 2. A negative data length was computed.
	 x	Poll/final bit.

Program: NCP#

Size in bytes: 48(30)

Created by: Specification of OLT at NCP generation and the receipt of a test line or test line and disconnect command (block is built in a leased buffer).

Pointer to OLLTCB: OQBOLL field in OLLTQCB.

Function: Contains current information on the operation of an online line test.

0(0) OLLTRXCT Residual transmit character count.	2(2) OLLTRRCT Residual receive character count.	
4(4) OLLTCCT Receive character compare count.	6(6) OLLTNCCT Receive character non-compare count.	
8(8) OLLTFLGS Flag field.		
OLLTDICW Dial SDF/PDF return if error.	OLLTDRCT Dial residual count if error.	
Remainder of flag field.		15(F) OLLTCMFG* Special communications flag.
16(10) OLLTICW1 ICW1 contents at completion of level 2 command.	18(12) OLLTICW2 ICW2 contents at completion of level 2 command.	
20(14) OLLTICW3 ICW3 contents at completion of level 2 command.	22(16) OLLTSYSF* OLLT System flags.	
24(18) OLLTCCRA Current command relative address.	26(1A) OLLTECRA Failing command relative address.	
28(1C) OLLTECBA Error command branch relative address.	30(1E) OLLTCCSA Current command start address.	
32(20) OLLTFBAD OLLT first buffer address.	34(22) OLLTQCBA QCB control block address.	
36(24) OLLTCCBA Current command buffer address.		
40(28) OLLTLKBA Pointer to LKB/LCB.		
44(2C) OLLTWRK Work area for level 5.		

*Indicates a byte expansion follows.

Byte Expansions

Offset/Field Name	Bit Pattern/ Hex Value	Contents
15(F) OLLTCMFG	X'08'	Dial command active.
	X'04'	Set time delay active.
	X'02'	Transmit on count active.
22(16) OLLTSYSF	Byte 0	OLLT system flags:
	1	No level 2 interrupt occurred before time-out.
	.1	SCF mask error was detected during level 2 interrupt.
	. . 1	A miscellaneous error was detected in level 2.
	. . . 1	Halfword compare error.
	. . . . 1 . . .	Scanner interlock error.
	. . . . . 1 . .	Post unsuccessful.
	. . . . . 1 .	Dial ACR error.
	 1	Dial ACU error.
	Byte 1	
	1	Character compare halfword (OLLTCCT) has overflowed.
	.1	Character non-compare halfword (OLLTNCCT) has overflowed.
	. . 1	Count went to zero on a receive SDLC command.
	. . . 1	Abort condition detected.
	. . . . 1 . . .	Abort sequence in progress.
	. . . . . x . .	Line/link test. 0=SDLC link test. 1=BSC/SS line test.
	. . . . . 1 .	Wait state.
	 1	Reset command received.

Program: NCP#

Size in bytes: Variable.

Created by: NCP upon receipt of a Test Line or Test Line with Disconnect command.

Pointer to OLLTLAB: LXBLTLAB field in ACB.

Function: Temporarily holds consecutive I/O interpretive commands for lookahead decode. The commands are:

- Transmit Character and Turn
- Transmit on Count
- Receive SDLC
- Receive and Compare
- Receive and Count

0(0) Buffer chain pointer.	2(2) Offset to next command to be executed.	3(3) Flags*
4(4) OLLT I/O interpretive commands. (3 maximum)		

*Indicates a byte expansion follows.

Byte Expansion

Offset/Field Name	Bit Pattern/ Hex Value	Contents
3(3) (No name)		Flags
	1	Transmit on Count phase 1 complete.
	.1	Transmit Turn phase 1 complete.
	. . 1	Receive phase 1 complete.
	 1	Receive and compare active or no buffer available in level 3.

Program: NCP#

Size in bytes: 24(18) for half-duplex lines.
48(30) for duplex lines.

Pointer to OLLTQCB: OLLTQCBA field in OLLT control block.

Function: Contains QCBs for OLLT routines (two identical QCBs for duplex operation).

See QCB for Input Queues for all bit definitions.

0(0) QCB1ECB Pointer to first element queued. (Shifted address)		2(2) QCBLECB Pointer to last element queued. (Shifted address)
4(4) QCBSTAT* Task and queue status.	5(5) QCBPRKEY* QCB ID flag and task protect key.	6(6) QCBLINK Pointer to next QCB on the queue. (Shifted address)
8(8) QCBTSKEP Task entry point (last 18 bits).		
QCBMCBD Major control block displacement.	9(9) QCBSCHED* Task dispatching priority.	
12(C) QCBSAVE Address of save area push-down list. (Shifted address)		14(E) QCBLUNK Pointer to previous QCB on the queue. (Shifted address)
16(10) OQBACB Pointer to ACB.		18(12) Reserved.
20(14) OQBOLL Pointer to OLLT.		

*Indicates a byte expansion occurs in the QCB for Input Queues.

Identical QCB for duplex operation.

Program: NCP

Size in bytes: 37(25)

Located in: Dynamically allocated buffer.

Created: When a BTU Test command is received.

Pointer to OLTT: DVBSDRT field in DVB when in online test mode.

Function: Contains status flags and counters from diagnostic I/O operations.

<table>
<tr><td colspan="4">0(0)
OLTCTRS
Counters</td></tr>
<tr><td colspan="4">8(8)
OLTFLGS
Flags. (This field can also be used for counters.)</td></tr>
<tr><td colspan="2">16(10)
OLTSTAT
Status field (same as IOBSTAT).</td><td>18(12)
OLTEXST
Extended status field (same as IOBEXTST).</td><td>19(13)
(Reserved).</td></tr>
<tr><td>20(14)
OLTPHER
Phase error-converted.</td><td>21(15)
OLTFSTS
First status - converted.</td><td colspan="2">22(16)
OLTFNLS
Final status - converted.</td></tr>
<tr><td colspan="2">24(18)
OLTCCMAD
Current relative command address.</td><td colspan="2">26(1A)
OLTTEMP
Temporary halfword work area.</td></tr>
<tr><td colspan="2">28(1C)
OLTFBAD
Address of first BCU buffer (Shifted address)</td><td colspan="2">30(1E)
OLTLCBAD
LCB address. (Shifted address)</td></tr>
<tr><td colspan="4">32(20)
OLTCBAD
Current command buffer address (last 18 bits).</td></tr>
<tr><td>OLTCBOF
Offset into current buffer.</td><td colspan="3"></td></tr>
<tr><td>36(24)
OLTXFER
Maximum buffers in Read subblock.</td><td colspan="3"></td></tr>
</table>

Program: NCP

Size in bytes: 24(18)

Created by: NCP generation.

Pointer to PCB: SYSPDBP field in HWE.

Function: Provides an area through which information is passed between modules supporting control panel operation.

Notes: This control block is required to be tailored for a specific machine. It requires the following information:

- Type of channel adapter installed.
- Type of communication scanner installed.

The channel adapter and communication scanner type information is used to generate the invalid external register address ranges for input. This information is used to verify external register addresses entered into the dynamic register display and address trace routines in order to avoid input/output instruction checks.

The invalid external register ranges follow the PCB in storage.

0(0) PCBADSW Value of the ADDRESS/DATA switches (last 18 bits). PCBCTL Control byte: used as interface with level 3 panel service module.		
4(4) PCBFNSW Value of the DISPLAY/FUNCTION SELECT switch.	6(6) PCBD1CTL Display 1 control byte.	7(7) PCBD2CTL Display 2 control byte.
8(8) PCBD1AD Display 1 address (last 18 bits). PCBFUNCE Function extension control byte.		
12(C) PCBD2AD Display 2 address (last 18 bits). PCBAPNSL Display appendage select byte.		
16(10) PCBICPAD Panel request intercept address. (Always shifted regardless of storage size.)	18(12) PCBICWD Current ICW address with bit 38 on.	
20(14) PCBICWN New ICW address - request for data set lead display.	22(16) (Reserved).	

PCF STATE VECTOR TABLE
(Type 1 Scanner only)

Program: PEP, EP

Size in bytes: 128(8F)

Located in: Module CYANUC (EP), $LVL2 (NCP)

Created by: NCP and EP generation.

Pointer to PCF State Vector Table: BCBVCT field in BCB

Referenced by: CYABIT10(EP), CYABIT20(EP), CYABIT30(EP), CXBBTSV(NCP).

Function: Provides address pointers to bit service routines.

Note: Offsets are shown within each table. The actual offset will be determined by the location of the table within the link edit map.

Start/Stop

0(0) CYANOOPX(EP) CXBBTSV2(NCP) Address pointer to PCF 0 - No-op.	2(2) CYAMPCF1(EP) CXBBTSV3(NCP) Address pointer to PCF 1 - Set Mode.
4(4) CYABPCF2(EP) CXBBTSV4(NCP) Address pointer to PCF 2 - Monitor DSR.	6(6) CYAPCF3(EP) CXBBTSV5(NCP) Address pointer to PCF 3 - Monitor RI/DSR.
8(8) CYAPCF45(EP) CXBBTSV6(NCP) Address pointer to Monitor Phase.	10(A) CYAPCF45(EP) CXBBTSV6(NCP) Address pointer to Monitor Phase.
12(C) CYANOOPX(EP) CXBBTSV2(NCP) Undefined for start-stop.	14(E) CYASRCVT(EP) CXBBTSVD(NCP) Address pointer to PCF 7 - Receive.
16(10) CYASPCF8(EP) CXBBTSV7(NCP) Address pointer to PCF 8 - Transmit Initial.	18(12) CYAXSSTT(EP) CXBBTSVB(NCP) Address pointer to PCF 9 - Transmit Normal.
20(14) CYASPCFA(EP) CXBBTSVA(NCP) Address pointer to PCF A - Transmit Break.	22(16) CYASPCFB(EP) CXBBTSV8(NCP) Address pointer to PCF B - Prepare to turn.
24(18) CYASPCFC(EP) CXBBTSV9(NCP) Address pointer to PCF C - Transmit Turn, RTS Off.	26(1A) CYASPCFD(EP) CXBBTSVH(NCP) Address pointer to PCF D - Transmit Turn, RTS on.
28(1C) CYANOOPX(EP) CXBBTSV2(NCP) Undefined for start-stop.	30(1E) CYAMPCFF(EP) CXBBTSVI(NCP) Address pointer to PCF F - Disable.

0(0) CXBBTSV2 Address pointer to PCF 0 - No-op	2(2) CXBBTSV3 Address pointer to PCF 1 - Set Mode
4(4) CXBBTSV4 Address pointer to PCF 2 - Monitor DSR	6(6) CXBBTSV5 Address pointer to PCF 3 - Monitor RI/DSR
8(8) CXBBTSVP Address pointer to Monitor Phase - Allow DSR error (flags)	10(A) CXBBTSVP Address pointer to Monitor Phase (flags)
12(C) CXBBTSVQ Address pointer to Receive Flags - No interrupt	14(E) CXBBTSVR Address pointer to Receive Data - PCF 7
16(10) CXBBTSVS Address pointer to PCF 8 - Transmit Initial	18(12) CXBBTSVT Address pointer to PCF 9 - Transmit Normal
20(14) CXBBTSVU Address pointer to PCF A - Transmit new sync	22(16) CXBBTSV2 Undefined for SDLC (No-op)
24(18) CXBBTSV9 Address pointer to PCF C - Transmit Turn, RTS off	26(1A) CXBBTSVV Address pointer to PCF D - Transmit data continuous- No interrupt
28(1C) CXBBTSV2 Undefined for SDLC (No-op)	30(1E) CXBBTSVI Address pointer to PCF F - Disable

Binary Synchronous

0(0) CYANOOPX(EP) CXBBTSV2(NCP) Address pointer to PCF 0 - No-op.	2(2) CYAMPCF1(EP) CXBBTSV3(NCP) Address pointer to PCF 1 - Set Mode.
4(4) CYABPCF2(EP) CXBBTSV4(NCP) Address pointer to PCF 2 - Monitor DSR.	6(6) CYABPCF3(EP) CXBBTSV5(NCP) Address pointer to PCF 3 - Monitor RI/DSR.
8(8) CYAPCF45(EP) CXBBTSV6(NCP) Address pointer to PCF 4 - Monitor Phase, DSR Check Off.	10(A) CYAPCF45(EP) CXBBTSV6 (NCP) Address pointer to PCF 5 - Monitor Phase, DSR Check on.
12(C) CYANOOPX(EP) CXBBTSV2(NCP) Undefined.	14(E) CYARCDTA(EP) CXBBTSVC(NCP) Address pointer to PCF 7 - Receive.
16(10) CYABPCF8(EP) CXBBTSVE(NCP) Address pointer to PCF 8 - Transmit Initial.	18(12) CYAXMDTA(EP) CXBBTSVG(NCP) Address pointer to PCF 9 - Transmit Normal.
20(14) CYABPCFA(EP) CXBBTSVF(NCP) Address pointer to PCF A - Transmit New Sync.	22(16) CYANOOPX(EP) CXBBTSV2(NCP) Undefined.
24(18) CYASPCFC(EP) CXBBTSV9(NCP) Address pointer to PCF C - Transmit Turn, RTS Off.	26(1A) CYASPCFD(EP) CXBBTSVH(NCP) Address pointer to PCF D - Transmit Turn, RTS On.
28(1C) CYANOOPX(EP) CXBBTSVI(NCP) Undefined.	30(1E) CYAMPCFF(EP) CXBBTSVI(NCP) Address pointer to PCF F - Disable.

Dial

0(0) CYADINOP(EP) CXBBTSVJ(NCP) Address pointer to PCF 0 - No-op.	2(2) CYANOOPX(EP) CXBBTSV2(NCP) PCF 1 undefined for Dial.
4(4) CYANOOPX(EP) CXBBTSV2(NCP) PCF 2 undefined for Dial.	6(6) CYANOOPX(EP) CXBBTSV2(NCP) PCF 3 undefined for Dial.
8(8) CYAPCFD4(EP) CXBBTSVK(NCP) Address pointer to PCF 4 - Monitor Call Unit.	10(A) CYAPCFD5(EP) CXBBTSVL(NCP) Address pointer to PCF 5 - Monitor Call Unit.
12(C) CYANOOPX(EP) CXBBTSV2 (NCP) PCF 6 undefined for Dial.	14(D) CYANOOPX(EP) CXBBTSV2(NCP) PCF 7 undefined for Dial.
16(10) CYAPCFD8(EP) CXBBTSVM(NCP) Address pointer to PCF 8 - Digit Valid.	18(12) CYANOOPX(EP) CXBBTSV2(NCP) PCF 9 undefined for Dial.
20(14) CYANOOPX(EP) CXBBTSV2(NCP) PCF A undefined for Dial.	22(16) CYANOOPX(EP) CXBBTSV(NCP) PCF B undefined for Dial.
24(18) CYANOOPX(EP) CXBBTSV2(NCP) PCF C undefined for Dial.	26(1A) CYANOOPX(EP) CXBBTSV2(NCP) PCF D undefined for Dial.
28(1C) CYANOOPX(EP) CXBBTSV2(NCP) PCF E undefined for Dial.	30(1E) CYADPCFF(EP) CXBBTSVN(NCP) Address pointer to PCF F - Disable.

Feedback Check

0-31(0-1F) CYANOOPX(EP) CXBBTSV2(NCP) Feedback check PCFs are No-op.

Program: NCP#

Size in bytes: 34(22) plus variable length text.

Function: Basic unit of transmission in the TP network. The FID0 PIU is used for requests directed to BSC and start-stop devices.

Note: This PIU layout is as it appears in an NCP buffer. The basic PIU begins with the transmission header.

Buffer Prefix

0(0) U0BUFCHN Buffer prefix chain field. (Shifted address.)	2(2) U0OFFSET Buffer prefix data offset field.	3(3) U0DATCNT Buffer prefix data count field.

Event Control Block

4(4) U0CSTAT Block status flags.	5(5) U0ESTAT Event status flags.	6(6) U0ECHN ECB chain pointer.
8(8) U0TMINT Set time interval, as specified by SETIME macro. or U0TCNT PIU0 text count.		10(A) U0WQCB QCB for waiting task. or U0BLKNS Hold area for blocks N(s).
12(C) UIB1TYPE Equal to 1st byte of destination RVT or UIBLBBA (NCP#) Last buffer of PIU address	13(D) UIB1STAT* UIB status	

Transmission Header

	14(E) TH0B0* TH Byte 0	15(F) Reserved.
16(10) TH0DAF Destination network address.	18(12) TH0OAF Origin network address.	
20(14) TH0SNF Sequence number.	22(16) TH0DCF Count (RH + RU).	

*Indicates a byte expansion follows.

Request/Response Header (RH)

24(18) RH0B0* RH Byte 0. (See Section 4)	25(19) RH0B1* RH Byte 1.	26(1A) RH0B2* RH Byte 2.	27(1B) RH0PAD FIDO pad between RH and RU.

Request/Response Unit (RU)

28(1C) RU0CMD BTU command. (Refer to Section 3)	29(1D) RU0MOD BTU command modifier. (Refer to Section 3)	30(1E) RU0FLG BTU flags. (Refer to BTU)
32(20) RU0SRP BTU system response. (Refer to Section 7)	33(21) RU0LRP BTU extended response. (Refer to Section 7)	Text field. (Variable length.)

*Indicates a byte expansion follows.

Offset/Field Name	Bit Pattern/ Hex Value	Contents
13(D) UIB0STAT		UIB status.
	X'80'	Recurrent PIU/sensitive data indicator.
	X'01'	Invalid DAF.
	X'02'	Unrecoverable path error.
	X'03'	Unrecoverable station error.
	X'04'	Invalid DCF.
	X'05'	Incomplete header.
	X'06'	Format error.
	X'07'	Auto network shutdown in progress.
14(E) TH0B0		Transmission header byte 0.
	. .00	FIDO BSC/SS node.
	. . . . 01 . .	Last segment.
	. . . . 10 . .	First segment.
	. . . . 11 . .	Only segment.
	. . . . 00 . .	Middle segment.
	x	1=Expedited flow. 0=Normal flow.
24(18) RH0B0		Request/response byte 0.
	x	1=Response. 0=Request.
	.xx	00=FM data 01=Network control. 10=Data flow control. 11=Session control. (See Section 4)
	. . . . x . . .	1=Formatted. 0=Unformatted.
	. . . . .x . .	1=Sense data included. 0=No sense data included.
	11	Only element.
	10	First element.
	01	Last element.
	00	Middle element.

Offset/Field Name	Bit Pattern/ Hex Value	Contents
25(19) RH0B1		Request/response byte 1.
	1	FME/DR1 requested/sent.
	. . 1	RRN/DR2 requested/sent.
	. . . 1	Exception response requested/sent.
	. . . . . 1 . .	Reserved.
	 1	Pace.
26(1A) RH0B2		RH byte 2.
	1	Begin bracket.
	. 1	End bracket.
	. . 1	Change direction (HDX only).
	. . . . x . . .	Code selection indicator 0=EBCDIC 1=ASCII

Program: NCP#

Size in bytes: 36(24) plus variable length text.

Function: Basic unit of transmission in the TP network. The FID1 PIU is used for transmission between the host, local NCP, and remote NCP.

Note: This PIU layout is as it appears in an NCP buffer. The basic PIU begins with the transmission header.

Buffer Prefix

0(0) U1BUFCHN Buffer prefix chain field. (Shifted address.)	2(2) U1OFFSET Buffer prefix data offset field.	3(3) U1DATCNT Buffer prefix data count field.

Event Control Block

4(4) U1CSTAT Block status flags.	5(5) U1ESTAT** Event status flags.	6(6) U1ECHN ECB chain pointer.
8(8) U1TMINT Set time interval, as specified by SETIME macro. - - - - - - - - - or U1TCNT PIU1 text count.		10(A) U1WQCB QCB for waiting task. - - - - - - - - - or U1BLKNS Hold area for blocks N(s).
12(C) UIB1TYPE Equal to 1st byte of destination RVT - - - - - - - - - or UIBLBBA (NCP#) Last buffer of PIU address	13(D) UIB1STAT* UIB status	

**Refer to ECBESTAT field of the Event Control Block.

Transmission Header

	14(E) TH1B0* TH byte 0.	15(F) Reserved.
16(10) TH1DAF Destination network address.	18(12) TH1OAF Origin network address.	
20(14) TH1SNF Sequence number.	22(16) TH1DCF Count (RH + RU).	

Request/Response Header (RH)

24(18) RH1B0* RH Byte 0. (See Section 4)	25(19) RH1B1* RH Byte 1.	26(1A) RH1B2* RH Byte 2.

*Indicates a byte expansion follows.

Request/Response Unit (RU)

			27(1B) RU1BT0 1st byte of prefix for session control FM requests. (Refer to Section 4) or RU1RC0 Request code for non session control FM requests. (Refer to Section 4)
28(1C) RU1BT1 2nd byte of prefix for session control FM requests. (Refer to Section 4)	29(1D) RU1RC2 Request code for session control FM requests. (Refer to Section 4)	30(1E) RU1NA Network address for session control FM requests.	
32(20) RU1WT* Trace type indicator.	33(21) RU1TM Time field for active trace and record trace data.	34(22) RU1SCA Subchannel address for EP line.	35(23) RU1RTT* Type of record trace data request.

*Indicates a byte expansion follows.

Byte Expansions

Offset/Field Name	Bit Pattern/ Hex Value	Contents
13(D) UIB1STAT		UIB status.
	X'80'	Recurrent PIU.
	X'01'	Invalid DAF.
	X'02'	Unrecoverable path error.
	X'03'	Unrecoverable station error.
	X'04'	Invalid DCF.
	X'05'	Incomplete header.
	X'06'	Format error.
	X'07'	Auto network shutdown in progress.
14(E) TH1B0		Transmission header byte 0.
	. .01	FID1 Intermediate node.
	. . . . 01 . .	Last segment.
	. . . . 10 . .	First segment.
	. . . . 11 . .	Only segment.
	. . . . 00 . .	Middle segment.
	. . . . . .x .	1=Primary to secondary flow. 0=Secondary to primary flow.
	x	1=Expedited flow. 0=Normal flow.
24(18) RH1B0		Request/response byte 0.
	x	1=Response. 0=Request.
	.xx	00=FM data 01=Network control 10=Data flow control 11=Session control (See Section 4)
	. . . . x . . .	1=Formatted. 0=Unformatted.

Offset/Field Name	Bit Pattern/ Hex Value	Contents
	.... .x..	1=Sense data included.* 0=No sense data.
	11	Only element.
	10	First element.
	01	Last element.
	00	Middle element.
25(19) RH1B1		Request/response byte 1.
	1...	FME/DR1 requested/sent.
	..1.	RRN/DR2 requested/sent.
	...1	Exception response requested/sent.
	.... .1..	Reserved.
	1	Pace.
26(1A) RH1B2		RH byte 2.
	1...	Begin bracket.
	.1..	End bracket.
	..1.	Change direction (HDX only).
	.... x...	Code selection indicator. 0=EBCDIC 1=ASCII
32(20) RU1WT	xx	Trace type indicator: Type 2 scanner - 01 Type 3 scanner - 11
35(23) RU1RTT		Type of Record Trace Data requested:
	x...	1=Duplex. 0=Half-duplex .
	.x..	If bit 1=1, 1=Transmit leg. 0=Receive leg.
	01	This is not the last Record Trace Data request.
	10	This is the last Record Trace Data request because a Deactivate Trace has been received.
	11	This is the last Record Trace Data request because Line Trace has been treminated due to slowdown.

*See Section 8.

Program: NCP#

Size in bytes: 32(20) plus variable length text.

Function: Basic unit of transmission in the TP network. The FID2 PIU is used for transmission between the NCP and the cluster control unit.

Note: This PIU layout is as it appears in the NCP buffer. The basic PIU begins with the transmission header.

Buffer Prefix

0(0) U2BUFCHN Buffer prefix chain field. (Shifted address.)	2(2) U2OFFSET Buffer prefix data offset field.	3(3) U2DATCNT Buffer prefix data count field.

Event Control Block

4(4) U2CSTAT Block status flags.	5(5) U2ESTAT Event status flags.	6(6) U2ECHN ECB chain pointer.
8(8) U2TMINT Set time interval as specified by SETIME macro. or U2TCNT PIU2 text mode.		10(A) U2WQCB QCB for waiting task. or U2BLKNS Hold area for blocks N(s)
12(C) UIB2TYPE Unused.	13(D) UIB2STAT* UIB status.	

	14(E) Alignment bytes.
16(10) Alignment bytes.	

Transmission Header

		18(12) TH2B0* TH byte 0.	19(13) Reserved.
20(14) TH2DAF Destination network address.	21(15) TH2OAF Origin network address.	22(16) TH2SNF Sequence number field.	

Request/Response Header (RH)

24(18) RH2B0* RH Byte 0. (See Section 4)	25(19) RH2B1* RH Byte 1.	26(1A) RH2B2* RH Byte 2.

*Indicates a byte expansion follows.

Request/Response Unit (RU)

			27(1B) RU2BT0 1st byte of prefix for session control FM requests. (Refer to Section 4) or RU1RC0 Request code for non session control FM requests. (Refer to Section 4)
28(1C) RU2BT1 2nd byte of prefix for session control FM requests. (Refer to Section 4)	29(1D) RU2RC2 Request code for session control FM requests. (Refer to Section 4)	30(1E) RU2NA Network address for session control FM requests.	

Byte Expansions

Offset/Field Name	Bit Pattern/ Hex Value	Contents
13(D) UIB2STAT		UIB status.
	X'80'	Recurrent PIU.
	X'01'	Invalid DAF.
	X'02'	Unrecoverable path error.
	X'03'	Unrecoverable station error.
	X'04'	Invalid DCF.
	X'05'	Incomplete header.
	X'06'	Format error.
	X'07'	Auto network shutdown in progress.
18(12) TH2B0		Transmission header byte 0.
	. .10	FID2 Cluster node.
	. . . . 01 . .	Last segment.
	. . . . 10 . .	First segment.
	. . . . 11 . .	Only segment.
	. . . . 00 . .	Middle segment.
	. . . . . .x .	1=Primary to secondary flow. 0=Secondary to primary flow.
	x	1=Expedited flow. 0=Normal flow.
24(18) RH2B0		Request/response byte 0.
	x	1=Response. 0=Request.
	.xx	00=FM data 01=Network control. 10=Data flow control. 11=Session control. (See Section 4)
	. . . . x . . .	1=Formatted. 0=Unformatted.
	. . . . .x . .	1=Sense data included.* 0=No sense data.
	11	Only element.
	10	First element.
	01	Last element.
	00	Middle element.

*See Section 8.

Offset/Field Name	Bit Pattern/ Hex Value	Contents
25(19) RH2B1	1... .... ..1. ....1 .... .1.. 1	FME/DR1 requested/sent. RRN/DR2 requested/sent. Exception response requested/sent. Reserved. Pace.
26(1A) RH2B2	1... .... .1.. .... ..1. .... x...	RH byte 2 Begin bracket. End bracket. Change direction (HDX only). Code selection indicator. 0=EBCDIC 1=ASCII

Program: NCP#

Size in bytes: 36(24) plus variable length text.

Function: Basic unit of transmission in the TP network. The FID3 PIU is used for transmission between the NCP and a terminal node.

Note: This PIU layout is as it appears in an NCP buffer. The basic PIU begins with the transmission header.

Buffer Prefix

0(0) U3BUFCHN Buffer prefix chain field. (Shifted address.)	2(2) U3OFFSET Buffer prefix data offset field.	3(3) U3DATSNT Buffer prefix data count field.

Event Control Block

4(4) U3CSTAT Block status flags.	5(5) U3ESTAT Event status flags.	6(6) U3ECHN ECB chain pointer.
8(8) U3TMINT Set time interval, as specified by SETIME macro. or U3TCNT PIU1 text count.		10(A) U3WQCB QCB for waiting task. or U3BLKNS Hold area for blocks N(s).
12(C) UIB3TYPE Equal to 1st byte of destination RVT.	13(D) UIB3STAT UIB status.	

	14(E)
Eight bytes for FID3 TH alignment.	

Transmission Header

22(16) TH3B0* TH byte 0.	23(17) TH3DAOF* Local session ID.

Request/Response Header (RH)

24(18) RH3B0* RH Byte 0 (See Section 4)	25(19) RH3B1* RH Byte 1	26(1A) RH3B2* RH Byte 2

*Indicates a byte expansion follows.

Request/Response Unit (RU)

			27(1B) RU3BT0 1st byte of prefix for SCP-FM requests. (Refer to Section 4) or RU1RC0 Request code for non SCP-FM requests. (Refer to Section 4)
28(1C) RU3BT1 2nd byte of prefix for SCP-FM requests. (Refer to Section 4)	29(1D) RU3RC2 Request code for SCP-FM requests. (Refer to Section 4)	30(1E) RU3NA Network address for SCP-FM requests.	
32(20) RU3WT Trace type indicator.	33(21) RU3TM Time field for active trace and record trace data.	34(22) RU3SCA Subchannel address for EP line.	35(23) RU3RTT Type of record trace data request.

*Indicates a byte expansion follows.

Byte Expansions

Offset/Field Name	Bit Pattern/ Hex Value	Contents
13(D) UIB3STAT		UIB status.
	X'80'	Recurrent PIU.
	X'01'	Invalid DAF.
	X'02'	Unrecoverable path error.
	X'03'	Unrecoverable station error.
	X'04'	Invalid DCF.
	X'05'	Incomplete header.
	X'06'	Format error.
	X'07'	Auto network shutdown in progress.
22(16) TH3B0		Transmission header byte 0
	..11	FID3 terminal node.
	.... 01..	Last segment.
	.... 10..	First segment.
	.... 11..	Only segment.
	.... 00..	Middle segment.
	.... ..x.	1=Primary to secondary flow. 0=Secondary to primary flow.
	x	1=Expedited flow. 0=Normal flow.
23(17) TH3DAOF		Local session ID.
	x...	1=to/from LU. 0=to/from SSCP.
	.x..	1=to/from logical unit. 0=to/from physical unit.
	..xx xxxx	Local address of station.

Offset/Field Name	Bit Pattern/ Hex Value	Contents
24(18) RH3B0		Request/response byte 0.
	x	1=Response. 0=Request.
	.xx	00=FM data 01=Network control. 10=Data flow control. 11=Session control. (See Section 4)
	. . . . x . . .	1=Formatted. 0=Unformatted.
	. . . . .x . .	1=Sense data included.* 0=No sense data.
	11	Only element.
	10	First element.
	01	Last element.
	00	Middle element.
25(19) RH3B1		Request/response byte 1.
	1	FME/DR1 requested/sent.
	. .1	RRN/DR2 requested/sent.
	. . .1	Exception response requested/sent.
	. . . . .1 . .	Reserved.
	1	Pace.
26(1A) RH3B2		Request/response byte 2.
	1	Begin bracket (BB)
	.1	End bracket (EB)
	. .1	Change direction (HDX only).
	. . . . x . . .	Code selection indicator. 0=EBCDIC 1=ASCII

*See Section 8.

Program: NCP#

Size in bytes: 52(34)

Created by: NCP generation. One for each NCP.

Pointer to OSB: RVT and HWE

Function: Contains parameters necessary to the control of the dialog between the System Services Control Point and the NCP Physical Services.

Physical Services Process Queue Control Block (Outbound)
(See QCB for Input Queues for all bit definitions.)

0(0) PSB1ECB Pointer to first element queued (Shifted address).		2(2) PSBLECB Pointer to last element queued (Shifted address).
4(4) PSBSTAT Task and queue status.	5(5) PSBPRKEY QCB ID flag and task protect key.	6(6) PSBLINK Pointer to next QCB on the queue (Shifted address).
8(8) PSBTSKEP Task entry point (last 18 bits).		
PSBMCBD Major control block displacement.	PSBSCHED Task dispatching priority.	
12(C) PSBSAVE Address of save area pushdown list (Shifted address).		14(E) PSBLUNK Pointer to previous QCB on queue (Shifted address).

Intermediate Network Node (INN) Error Handler Queue Control Block (Inbound)
(See QCB for Input Queues for all bit definitions.)

16(10) IEH1ECB Pointer to first element queued (Shifted address).		18(12) IEHLECB Pointer to last element queued (Shifted address).
20(14) IEHSTAT Task and queue status.	21(15) IEHPRKEY QCB ID flag and task protect key.	22(16) IEHLINK Pointer to next QCB on the queue (Shifted address).
24(18) IEHTSKEP Task entry point (last 18 bits).		
IEHMCBD Major control block displacement.	IEHSCHED Task dispatching priority.	
28(1C) IEHSAVE Address of save area pushdown list (Shifted address).		30(1E) IEHLUNK Pointer to previous QCB on queue (Shifted address).
32(20) PSBEQI Inbound sequence number.		34(22) PSBSEQO Outbound sequence number.

36(24) PSBADRPS Network address of NCP physical services.		38(26) PSBADRPC Network address of physical service control point.	
40(28) PSBLACNT Active link count.		42(2A) PSBPSTAT* Physical services primary status.	43(2B) PSBSSTAT* Physical services secondary status.
44(2C) PSBLDID Load ID characters.			
52(34) PSBTCHN Used by the remote NCP only. Initially, this field points to the first LKB in a chain of LKBs that can be used as the link to the local controller. After IPL, this field points to the LKB for the link that the remote NCP is currently using as the operational link to the local NCP. In a local NCP, this field is all zeros.			
56(38) PSBSITO SVT index for the channel entry. (For a remote NCP, this field is set to zero at NCP generation. After the remote NCP is initialized, this field continues the SVT index for the current path to the host.)	57(39) PSBCSTAT* Configuration restart status.	58(3A) Reserved	

Auto Network Shutdown Extension

	60(3C) PSBCANST* Auto network shutdown status.	61(3D) PABANSC* Condition causing auto network shutdown.
62(3E) PSBPLNQC BSC/SS lines not quiesced count.	64(40) PSBSLNQC SDLC links not quiesced count.	

*Indicates a byte expansion follows.

Byte Expansions

Offset/Field Name	Bit Pattern/ Hex Value	Contents
42(2A) PSBPSTAT		Physical services primary status.
	1...	Session established.
	.1..	Data flow enabled.
	..1.	Data flow active.
43(2B) PSBSSTAT		Physical services secondary status.
	1...	Processing Clear command.
	.1..	Recovery mode.
57(39) PSBCSTAT		Configuration restart status.
	1...	Path to host down state.
	.1..	Auto network shutdown state.
	..1.	Activate Physical required state.
	...1	NCP is cold.
60(3C) PSBCANST		Auto network shutdown status.
	1...	SNA network quiesce complete.
	.1..	BSC/SS network quiesce complete.
	..1.	BSC/SS RVT scan complete.
61(3D) PSBANSC		Condition causing auto network shutdown.
	X'01'	Auto network shutdown invoked from panel.
	X'02'	Attention or activity timeout.
	X'03'	Unexpected Activate Physical.
	X'04'	DISC received from local NCP. (Remote NCP only)
	X'05'	SNRM received from local NCP. (Remote NCP only)
	X'06'	Unrecoverable SDLC error on link to local. (Remote NCP only)

QUEUE CONTROL BLOCK

Program: EP

Size in bytes: 50(32)

Located: Starts at storage location X' 700'.

Created by: EP generation.

Updated by: LCP, ICP.

Referenced by: LCP, ICP.

Function: Provides a pointer to the first and last CCBs on all queues.

0(0) TMRF Pointer to next CCB checked for time-out.	2(2) IPL save registers.
4(4)	
16(10) QCBF* QCB flags and active command.	18(12) QCBT (QCBTIO) Save area for TIO CCB.
20(14) PDSOF Address pointer to the first CCB in the priority data service out queue.	22(16) PDSOL Address pointer to the last CCB in the priority data service out queue.
24(18) DSOF Address pointer to the first CCB in the data service out queue.	26(1A) DSOL Address pointer to the last CCB on the data service out queue.
28(1C) DSIF Address pointer to the first CCB in the data service in queue.	30(1E) DSIL Address pointer to the last CCB in the data service in queue.
32(20) SOF Address pointer to the first CCB in the status out queue.	34(22) SOL Address pointer to the last CCB in the status out queue.
36(24) SNOF Address pointer to the first CCB in the sense out queue.	38(26) SNOL Address pointer to the last CCB in the sense out queue.
40(28) SSF Address pointer to the first CCB in the stacked status queue.	42(2A) SSL Address pointer to the last CCB in the stacked status queue.
44(2C) CSPQ1 Address pointer to the first character serviced (type 1 scanner).	46(2E) CSPQ2 Address pointer to the last character serviced (type 1 scanner).
48(30) SVC0	

*Indicates a byte expansion follows.

Byte Expansions

Offset/Field Name	Bit Pattern/ Hex Value	Contents
16(10) QCBF		QCB flags.
	1...	Set suppress out down.
	.1..	Set stacked status service.
	..1.	Set sense service.
	...1	Set TIO sequence.
	.... 1...	Do not dequeue from stacked status queue.
	.... .x..	Panel command flag.

QUEUE CONTROL BLOCK FOR INPUT QUEUES

QCB (Input)

Program: NCP

Size in bytes: 16(10) when no BHRs are defined; 20(14) when BHRs are defined.

Created by: NCP generation.

Pointer to QCB: Variable.

Function: Controls input queues.

Note: This is the general format for all input queues. The XYZ identifier at the beginning of each label is replaced with a different three letter identifier for each particular input queue.

0(0) XYZ1ECB Pointer to first element queued. (Shifted address)		2(2) XYZLECB Pointer to last element queued. (Shifted address)
4(4) XYZSTAT* Task and queue status.	5(5) XYZPRKEY* QCB ID flag and task protect key.	6(6) XYZLINK Pointer to next QCB on the queue. (Shifted address)
8(8) XYZTSKEP Task entry point (last 18 bits).		
XYZMCBD Major control block displacement.	9(9) XYZSCHED* Task dispatching priority.	
12(C) XYZSAVE Address of save area push-down list. (Shifted address)		14(E) XYZLUNK Pointer to previous QCB on the queue. (Shifted address)
16(10) XYZBHSET BH set (or BHR) address (last 18 bits). This field included only when BHRs are defined.		
XYZBHRST* BHR status bit.	17(11) XYZBHSCH* BHR scheduling bits.	

*Indicates a byte expansion follows.

Byte Expansions

Offset/Field Name	Bit Pattern/ Hex Value	Contents
4(4) XYZSTAT		Task and queue status.
	1	Task in pending state (triggered).
	.1	Task in wait state.
	. .1	Delayed task pending bit (task is triggered while active).
	. . .1	Task is not in ready state.
	. . . . 1 . . .	Task is reentrant.
	. . . . .1 . .	BHR extension definition: task can execute BHRs.
	1	Element has been dequeued (and not returned to the queue) during execution of active task.
5(5) XYZPRKEY		QCB ID flag and task protect key.
	1010 1 . . .	Indicates that this is a pseudo-input or input QCB.
	xxx	Protection key.
9(9) XYZSCHED		Task dispatching priority.
	100	Task priority is productive.
	010	Task priority is immediate.
	001	Task priority is appendage.
	000	Task priority is nonproductive.
16(10) XYZBHRST		BHR status bits.
	10	Point 2 execution.
	01	Point 1 execution.
	11	Point 3 execution.
	. .1	First time BHR controller called.
	. . .1	BHR sequence aborted.
	. . . . 1 . . .	BHR protect key.
17(11) XYZBHSCH		BHR scheduling bits.
	1	BHR scheduled for Read command.
	.1	BHR scheduled for Invite command.
	. .1	BHR scheduled for Write command.
	. . . . .1 . .	BHR scheduled after I/O.

QUEUE CONTROL BLOCK FOR WORK QUEUES

Program: NCP

Size in bytes: 8(8)

Created by: NCP generation.

Pointer to QCB: Variable.

Function: Control work queues.

Note: This is the general format for all work queues. The SWQ identifier at the beginning of each label is replaced with a different three letter identifier for each particular work queue.

0(0) SWQ1ECB Pointer to first element queued. (Shifted address)		2(2) SWQLECB Pointer to last element queued. (Shifted address)
4(4) SWQSTAT* Task and queue status.	5(5) SWQPRKEY* QCB ID flag and task protect key.	6(6) SWQLINK Pointer to the next QCB on the queue. (Shifted address)

*Indicates a byte expansion follows.

Byte Expansion

Offset/Field Name	Bit Pattern/ Hex Value	Contents
4(4) SWQSTAT		Task and queue status.
	1... .... ..1. ....1 .... 1... .... .1.. 1	Task in pending state (triggered). Delayed task pending bit (task is triggered while active.) Task is not in ready state. Task is reentrant. BHR extension definition: task can execute BHRs. Element has been dequeued (and not returned to the queue) during execution of active task.
5(5) SWQPRKEY		QCB ID flag and task protect key.
	1010 0... xxx	Indicates that this is a work QCB. Protect Key.

Program: NCP1, NCP2

Size in bytes: Variable depending upon numbers of entries.

Created by: NCP generation.

Pointer to RVT: SYSRVTAD field in word direct addressable storage (XDA), location X'07E8'.(Points to the two-byte count field preceding the first RVT entry.)

Function: Serves as the master directory to level 5 resource control blocks. Each entry contains a type field plus the address of the resource control block for that resource.

Immediately preceding the first entry is a halfword that contains the highest ID allowed. Entry 0 is reserved for this communications controller. Format of entries is as follows.

	-2(-2) Highest resource ID in table. (Number of entries -1.)
0(0) RVTTYPE* Resource type.	1(1) RVTRP Pointer to resource control block. The resource control block can be a line control block, logical line group table, or device control block, depending upon the resource type.

*Indicates a byte expansion follows.

Byte Expansions

Offset/Field Name	Bit Pattern/ Hex Value	Contents
0(0) RVTTYPE		Resource type.
	0000 0000	The communications controller.
	100.	Line.
	010.	Device.
	001.	Line group.
	...1	Input.
	.... 1...	Output.
	.... .10.	Switched call-in.
	.... .11.	Switched call-out.
	1	Device-dependent.

Program: NCP#

Size in bytes: Variable depending upon numbers of entries.

Created by: NCP generation.

Pointer to RVT: SYSRVTAD field in word direct addressable storage (XDA), location X'07E8'. (Points to the two-byte field that contains the highest BSC/SS address in the table (first entry -2).)

The SVT entry representing the sub-area points to the two-byte field that contains the highest network address in the table (first entry -4).

Function: Serves as the master directory to level 5 resource control blocks. Each entry contains a type field plus the address of the resource control block for that resource.

Immediately preceding the first entry are two halfwords that contain the highest network address in the table and the highest BSC/SS ID (if any) in the table.

-4(-4) Highest element address in the table.	-2(-2) Highest BSC/SS element address (if any).

0(0)		RVTRP
RVTTYPE		Address of Resource Control Block. The Resource Control Block can be a Line Control Block, Device Control Block, Link Control Block, Station Control Block, Cluster Control Block, Logical Unit Control Block, or Physical Services Control Block (always 1st entry in RVT).
RVTTYPE1* Resource type.	RVTTYPE2* Resource type indicator.	

*Indicates a byte expansion follows.

Byte Expansions

Offset/Field Name and Bit Pattern		Contents/Description
0(0) RVTTYPE1	1(1) RVTTYPE2	
	1	SVT entry (see SVT DSect)
	0	RVT entry
	00	Local resource
	01	Remote resource
	0 .0	BSC/SS resource
100	0 .0	BSC/SS line
010	0 .0	BSC/SS device
001	0 .0	BSC/SS line group
. . .1	0 .0	BSC/SS input
. . . . 1 . . .	0 .0	BSC/SS output
. . . . .10 .	0 .0	BSC/SS swtiched call-in
. . . . .11 .	0 .0	BSC/SS switched call-out
. 1	0 .0	BSC/SS device dependent flag
0000 0000	0 .1	SDLC resource
0000 0000	0 .1	NCP physical services resource
1	0 .1	SDLC link
0110	0 .1	SDLC cluster
0101	0 .1	SDLC terminal
00 . . 1 . . .	0 .1	SDLC logical unit
. . . . .1 . .	0 .1	SDLC switched
. . . . .	010	Invalid
1111 1111	0	End of RVT
. . . . .	0 . . . xxxx	High order bits of resource address

Program: NCP#

Size in bytes: 60(3C)

Created by: NCP generation PU macro.

Pointer to SCB: In SVT.

Function: Contains the QCB, status, and scheduling information for station control. If station is a cluster, SCB is incorporated into CUB (see CUB).

Link Inbound Queue (LIBQ) Control Block
(See QCB for Input Queues for all bit definitions).

0(0) SCB1ECB Pointer to first element queued (Shifted address).		2(2) SCBLECB Pointer to last element queued (Shifted address).
4(4) SCBSTAT Task and queue status.	5(5) SCBPRKEY QCB ID flag and task protect key.	6(6) SCBLINK Pointer to next QCB on the queue (Shifted address).
8(8) SCBTSKEP Task entry point (last 18 bits).		
SCBMCBD Major control block displacement.	SCBSCHED Task dispatching priority.	
12(C) SCBSAVE Address of save area pushdown list (Shifted address).		14(E) SCBLUNK Pointer to previous QCB on queue (Shifted address).

Link Outbound Queue (LOBQ) Control Block

16(10) SCBLOBH Link outbound queue head pointer.	18(12) SCBLOBT Link outbound queue tail pointer.

Link Outstanding Queue (LOSQ) Control Block

20(14) SCBLOSH Link outstanding queue head pointer.	22(16) SCBLOST Link outstanding queue tail pointer.

24(18) SCBLKB Address of Link Control Block (18 bits).			
SCBADRC SDLC addressing character.			
28(1C) SCBRSE Network address of resource.		30(1E) SCBSSCF* Service seeking commands.	31(1F) SCBSSCP Contact Poll commands.
32(20) SCBSTATS* Station status	33(21) SCBOCF* Service seeking output control flags.	34(22) SCBTCNT Transmission counter.	
36(24) SCBAPIU Address of Physical Service PIU (18 bits).			
SCBTYPE* Station type.			

*Indicates a byte expansion follows.

40(28) SCBNR Receive count.	41(29) SCBNS Send count.	42(2A) SCBERS (Note 1) Error retry status.	
44(2C) SCBEERS Extended retry status. (Note 2)	45(2D) SCBTRTCT Total retry count.	46(2E) SCBOCL Outstanding count limit.	SCBCOC Current outstanding count.
48(30) SCBPNS NS at time of poll.	49(31) SCBPCNT Pass limit.	50(32) SCBRTCNT First level ERP retry count.	SCBSLC Second level ERP retry count.
52(34) SCBSRTLR Second level retry limit.	53(35) SCBRCMD* Run command modifiers.		

*Indicates a byte expansion follows.

Note 1: Refer to the LXBSTAT and LXBSTATC fields of the Link XIO Control Block for a definition of the status bits.

Note 2: Refer to the LXBEXTST field of the Link XIO Control Block for a definition of the status bits.

SDLC Secondary Command Pseudo Buffer

	54(36) SCBCMDRO CMDR pseudo buffer link field.
56(38) SCBCMDRC CMDR invalid CMD, N(s), N(r).	58(3A) SCBCMDRX* CMDRZYXW diagnostic flags.

*Indicates a byte expansion follows.

or

SDLC Primary Second Level ERP Fields

		54(36) SCB2ERPT Hardware second level ERP time-out value.	
56(38) SCBTERR Monitor secondary errors count.	57(39) SCBERPT Second level ERP time delay.	58(3A) SCBERPCS ERP control flags send.	59(3B) SCBOCLS Outstanding count limit save area.

Byte Expansions

Offset/Field Name	Bit Pattern/ Hex Value	Contents
30(1E) SCBSSCF	Byte 0	Service seeking commands.
	1...	Poll skip flag.
	.1..	Halt service seeking.
	..1.	Not operational.
	1	Contact poll command active.
	Byte 1	Contact poll commands.
	1...	Disconnect (DISC).
	.1..	Set Normal Response mode. (SNRM)
	.... .1..	Set Initialization Mode (SIM)
	.... ..1.	Exchange Identification (XID)
	x	Contact poll command field.
32(20) SCBSTATS		Station status.
	...1	Remote power-off in progress.
33(21) SCBOCF		Service seeking output control flags.
	1...	Output skip bit.
	.1..	Run terminator interlock.
	..1.	RNR received.
	...1	Second level delay in progress.
	.... .1..	Duplex data.
	.... ..1.	Half-duplex poll command.
	1	Half-duplex poll in progress.
36(24) SCBTYPE		Station type.
	x...	1=Duplex station. 0=Half-duplex station.
	..1.	Switched SDLC station.
	.... .1..	Terminal node (type 1 PU).
	.... ..1.	Cluster controller (type 2 PU).
	x	1=Intermediate node (INN). 0=Boundary node (BNN).
53(35) SCBRCMD		Run command modifiers.
	.1..	Override 1st and 2nd level retries.
	...1	Immediate retry.
58(3A) SCBCMDRX	.... ZYXW	Z=Invalid N(R) in received C field. Y=Ran out of buffers while trying to receive. X=Data received when not allowed. W must be on with X. W=Invalid C field or non-implemented command. W may be on alone.
77(4D) CUBSSTAT		Physical unit secondary status.
	1...	3270 station.

Program: NCP

Size in bytes: 4(4) or 8(8)

Located in: Switched line group table (SGT), one SGE for each line in the group.

Created by: NCP generation.

Pointer to SGE: None. (See SGT.)

Function: Points to a line control block (LCB) or another SGT for chaining.

The following format is for:

- First entry if there is no secondary request group. (See SGT for secondary request group.)
- Each entry after first.
- Last entry if there is no secondary service group.

0(0)	
SGELCBP Pointer to LCB work queue or secondary request SGT (last 18 bits).	
SGEFLAGS* Flags.	

The following format is for last entry if there is a secondary service group.

0(0)	
SGELCBP Pointer to LCB (last 18 bits).	
SGEFLAGS* Flags.	
4(4)**	
SGESSGP Pointer to secondary service group.	

*Indicates a byte expansion follows.
**Actual position depends upon number of entries in table.

Byte Expansions

Offset/Field Name	Bit Pattern	Contents
0(0) SGEFLAGS		Flags
	1	Queue is present (always 1).
	. . 1	Not line entry.
	. . . 1	Secondary request entry.
	. . . . 1 . . .	Last line entry.
	. . . . . 1 . .	Secondary service group entry is next.

Program: NCP

Size: QCB, counter, and first entry for secondary request group = 20(14) bytes.

Created by: NCP generation.

Pointer to SGT: COESGTP field in COE; LCBESGTP field in LCB.

Function: The SGT is a group of similar type switched lines that can be used to call a terminal that uses that group.

Switched Group QCB (SGTORQ)
(See QCB for Work Queues for all bit definitions.)

0(0) SGT1ECB Pointer to first element queued. (Shifted address)		2(2) SGTLECB Pointer to last element queued. (Shifted address)
4(4) SGTSTAT Task and queue status.	5(5) SGTPRKEY Protection key.	6(6) SGTLINK Pointer to next QCB in queue. (Shifted address)

8(8) SGTWLL Work load limit.	9(9) SGTWLC Work load current size.	10(A) SGTQL Queue limit.	11(B) SGTCIL Call in limit.
12(C) SGTCIC Call in counter.	13(D) Pad		
16(10) SGT1E Address of secondary request group SGT (last 18 bits).			
SGTFLAG* Flags.			

*Indicates a byte expansion follows.

Byte Expansions

Offset/Field Name	Bit Pattern	Contents
16(10) SGTFLAG		Flags.
	1...	Queue is present (always 1).
	..1.	Not line entry.
	...1	Secondary request group.
	.... 1...	Last line entry.
	.... .1..	Secondary service group entry is next.

Program: NCP

Size in bytes: 4(4)

Located in: DVB.

Created by: NCP generation.

Pointer to SID: None; SID follows COE if send ID is required.

Function: Contains information required for sending hardware identification. Extension is included only for BSC switched terminals that require the 3705 to send its ID.

0(0)*	SIDIDPTR Pointer to the ID to be sent for this device (last 18 bits).
SIDIDCT Send ID count.	
4(4)*	SIDCOEID Pointer to call out ID list.
SIDFLGS (Reserved)	

*Note: Actual position depends on other extensions present. This extension is present only if the call-out extension (COE) is present, and always follows that extension.

Program: NCP#

Size in bytes: Dependent upon maximum sub-area in the network

Created by: NCP generation

Pointed to by: CXTSIT in the link edit map and HWE.

Function: Contains indices into the Sub-area Vector Table (SVT). The desired SIT displacement is found by adding the sub-area address (in the DAF) to the location of the SIT (CXTSIT). The index in the SIT entry multiplied by 4 yields the actual displacement into the SVT for the associated resource.

0(0) Invalid (X'00')	1(1) Index	2(2) Index	(n)* Index

*n = maximum sub-area in the network.

SERVICE ORDER TABLE FOR BSC/SS LINES

SOT (BSC/SS)

Program: NCP

Size in bytes: 4 bytes in header; 4 bytes in each entry; 4 bytes in trailer.

Created by: NCP generation.

Pointer to SOT: LCBESOTP field in LCB.

Function: Defines the order in which devices on a BSC/SS line are interrogated to see if that device requires service. Generated for multipoint lines.

Header

0(0) SOTEMAX Maximum number of entries.	1(1) SOTUSE Number of entries in use.	2(2) (Reserved).

Entry Format

4(4) SOTRESP Pointer to the DVBSTAT field in the device control block (DVB) for this device. More than one entry can point to the same DVB.

Trailer

* Negative offset to first entry in SOT.	* Set to zero.

*Offset depends on the number of entries in the SOT.

Program: NCP#

Size in bytes: 4 bytes in header, 4 bytes in each entry, 4 bytes in trailer.

Created by: NCP generation.

Pointer to SOT: LXBPOLL field in ACB.

Function: Defines the order in which stations on an SDLC link are interrogated to see if that station requires service.

Header

0(0) Zero.	2(2) Maximum number of entries.	3(3) Number of entries in use.

Entry Format

4(4) Negative offset to 1st entry in SOT. (14 bits)	Pointer to SCB (CUB) (representative entry).

Trailer

Negative offset to first entry in SOT.	Zero (end of table).

Program: NCP#

Size in bytes: 16(F)

Created by: NCP generation.

Pointer: Fullword at LUB-4.

Function: Contains control parameters and work areas that supplement the LUB for the SDLC/BSC path function. An SPB is created for each LUB that is associated with an SDLC/BSC path.

0(0) SPBDNA Network address of the BSC device.	2(2) SPBANSIN Last sequence number in (APPL-NCP).	
4(4) SPBDVB Pointer to DVB for BSC device (during initialization only).		
SPBANSOT Last sequence number out (APPL-NCP).	6(6) SPBNSSIN Last sequence number in (NCP-LU).	
8(8) SPBNSSOT Last sequence number out (NCP-LU).	10(A) SPBSVPSN New sequence number in.	
12(C) SPBSVSPN New sequence number out.	14(E) SPBQSPS* State indicators.	15(F) SPBSTAT* Common status.

*Indicates a byte expansion follows.

Byte Expansions

Offset/Field Name	Bit Pattern/ Hex Value	Contents
14(E) SPBQSPS		State indicators.
	1	Quiesce state (primary to secondary).
	.1	Shutdown state (primary to secondary).
	. . 1	Sequence number to be set (primary to secondary).
	. . . . 1 . . .	Quiesce state (secondary to primary).
	. . . . . 1 . .	Shutdown state (secondary to primary).
	. . . . . 1 .	Sequence number to be set (secondary to primary).
15(F) SPBSTAT		Common status.
	1	Valid device or session.
	.1	Some sequence number is active. (Clean bit.)
	. . x	Data flow reset indicator.
	. . . x	Data flow error indicator.
	. . 1 1	An error has occurred; only session control requests can flow.
	. . 1 0	An error has occurred; the secondary to primary path is quiesced or shutdown.
	. . 0 1	Data flow reset state. Data cannot flow until a SDT request is received.
	. . 0 0	Normal data flow state.
	. . . . x . . .	Data flow control path indicator. 1=BSC-LU. 0=APPL-LU.

Program: NCP#

Size in bytes: 4(4) for each sub-area.

Created by: NCP generation.

Pointed to: By entry in sub-area index table and HWE. The SVT is located between the SIT and RVT. The last entries in the SVT have an X'FF' delimiter.

Function: Contains address of RVT if sub-area is local, address of SCB if sub-area is remote, or address of CHB (type 2 CA) or COB (type 1 CA) if sub-area is host. The first entry in the table is an invalid entry.

0(0)		
SVTENT		
Address of RVT, SCB or CHB/COB (last 18 bits)		
SVTTYPE1*	SVTTYPE2*	

*Indicates a byte expansion follows.

Byte Expansions

Offset/Field Names and Bit Patterns		Contents/Description
0(0) SVTTYPE1	1(1) SVTTYPE2	
....	0...	RVT entry (see RVT Dsect)
....	1...	SVT entry
....	10..	BNN sub-area type entry
....	100.	RVT does not contain BSC/SS resources
....	101.	RVT contains BSC/SS resources
0...	10..	RVT does not contain SDLC resources
0...	11..	RVT contains SDLC resources
1...	11..	Invalid
....	110.	Invalid
0...	111.	SDLC sub-area entry
00..	111.	Adjacent sub-area entry
01..	....	Tandem sub-area entry
0... 0...	111.	Path to sub-area is link
0... 1...	111.	Path to sub-area is channel
0... ...0	111.	Sub-area does not contain SSCP
0... ...1	111.	Sub-area contains SSCP
....	1... xxxx	High order bits of SCB or RVT address
1111 1111	1...	End of SVT

Program: NCP

Size in bytes: 21(15)

Created by: NCP generation.

Pointer to TND: SYSEBCP field in HWE.

Function: Keeps track of current time and date.

0(0) TNDMDY Date in the form mm/dd/yy.* (length of 8 bytes)	
	6(6) TNDYDOY Julian date in the form yy.ddd.* (The yy part of this field overlaps the yy part of the previous field.)
12(C) TNDHMS Time in the form hh.mm.ss.**	
20(14) TNDUSKIP Inhibit or allow update of TND. Zero = inhibit Nonzero = allow update.	

* m = month
d = day
y = year

** h = hour
m = minute
s = second

CHANNEL ADAPTER TRACE TABLE

Program: NCP#

Size in bytes: 24 plus 32 bytes per trace entry (number of entries is user specified).

Location: After CXCAIOS3 for type 1 channel adapter or after CXCAIOS4 for type 2 and 3 channel adapters.

Created by: SYSCG006 assembly.

Function: Traces NCP channel adapter interrupts.

Type 1 Channel Adapter Trace Table

0(0) CXCAIOS3 Contains the dump identifier characters "CXCAIOS3".	
8(8) Address of the beginning of the trace table.	12(C) Current address of the trace table.
16(10) Address of the end of the trace table.	20(14) CTRC Contains the identifier characters "CTRC".
24(18) Variable length table extended by 32 bytes per trace entry. See Trace Entry: Type 1 Channel Adapter, for format.	

Type 2 and 3 Channel Adapter Trace Table

0(0) CXCAIOS4 Contains the dump identifier characters "CXCAIOS4".	
8(8) Address of the beginning of the trace table.	12(C) Current address of the trace table.
16(10) Address of the end of the trace table.	20(14) CTRC Contains the identifier characters "CTRC"
24(18) Variable length table extended by 32 bytes per trace entry. See Trace Entry: Type 2 and 3 Channel Adapter, for format.	

Trace Entry: Type 1 Channel Adapter

0(0) COBICND Flags entry conditions.	2(2) COBCND Flags exit conditions.
4(4) COBXR77 Contents of input external register X'77'.	6(6) COBXR60 Contents of input external register X'60'.
8(8) COBXR61 Contents of input external register X'61'.	10(A) COBXR62I Contents of input external register X'62'.
12(C) COBXR62O Contents of output external register X'62'.	14(E) COBXR64 Contents of input/output external register X'64'.
16(10) COBXR65 Contents of input/output external register X'65'.	18(12) COBXR66 Contents of output external register X'66'.

20(14) COBXR67I Contents of input external register X'67'.	22(16) COBXR67O Contents of output external register X'67'.
24(18) COBCCMD Current channel command.	26(1A) COBSTAT Current channel status.
28(1C) Address of caller.	

Trace Entry: Type 2 and 3 Channel Adapter.

0(0) CHBICND Flags entry conditions.	2(2) CHBCND Flags exit conditions.
4(4) CHBXR50 Contents of input/output external register X'50'.	6(6) CHBXR51 Contents of input/output external register X'51'.
8(8) CHBXR52 Contents of input external register X'52'.	10(A) CHBXR53 Contents of output external register X'53'.
12(C) CHBXR54 Contents of output external register X'54'.	14(E) CHBXR55I Contents of input external register X'55'.
16(10) CHBXR55O Contents of output external register X'55'.	18(12) CHBXR56 Contents of input/output external register X'56'.
20(14) CHBXR57 Contents of output external register X'57'.	22(16) CHBXR5A Contents of input external register X'5A'.
24(18) CHBXR5C Contents of input external register X'5C'.	26(1A) Halfword of zeros.
28(1C) Address of caller.	

TRACE TABLE (LINE)

Program: NCP

Size in bytes: 4 for each entry.

Created by: NCP line trace routine.

Pointer: LTCB fields.

Function: The NCP line trace stores four bytes of diagnostic information into a trace entry whenever a level 2 interrupt occurs. Three bytes of the information are obtained from the ICW (type 2 scanner) or BCB (type 1 scanner). The fourth byte is a timer field. The NCP stores the trace entries in dynamically allocated buffers, then transfers them to the host with a Request Trace Data PIU. Refer to "NCP Line Trace Control Block Relationships" in Section 1.

Trace Entry

0(0) LCD/PCF*** *Type 2 CSA*- ICW bits 16-23. *Type 1 CSA*- BCBLCPCF (BCB+9)*	1(1) Timer Field**	2(2) SCF*** *Type 2 CSA*- ICW bits 0-7. *Type 1 CSA*- BCBSCF (BCB+6)	3(3) PDF*** *Type 2 CSA*- ICW bits 8-15. *Type 1 CSA*- BCBPDF (BCB+7)

*Indicates a byte expansion follows.
**Contains a hex value indicating, in tenths of a second, the time that elapsed between the activation of the trace and the level 2 interrupt represented by this entry. The field is reset to zero when the trace starts and wraps around to zero after 25.5 seconds.
***Section 11 describes the ICW fields.

Byte Expansions

Offset/Field Name	Bit Pattern/ Hex Value	Contents
0(0) LCD/PCF		LCP/PCF for type 1 CSA.
	xxxx	LCD bits: 0011=SDLC 0100=Start-stop 0101=BSC. 0110=Dial. 0111=Feedback.
	 xxxx	PCF bits.

Program: PEP, EP

Size in bytes: 8 for each entry

Created by: Trace routine (CYATRC) for NCP generation.

Referenced by: CYATRC and CYADSS

Function: Provides line and channel trace for selected subchannel addresses. One double entry is made for each level 2 line interrupt and each level 3 channel status service interrupt. One single entry is made for each level 3 channel data service, initial selection and timeout.

Level 1 Error Log Entry

0(0) ENTRYID X'00'	1(1) X'00'	2(2) LOGENTRY Error log entry.
4(4) EXTENTRY Error log extended entry. (Contents of the LAR for program check and channel adapter check.)		6(6) X'0000' or LAR

Level 2 Trace Entry (Part 1)
Type 1/2 scanner

0(0) ENTRYID old base = X'10' new base = X'1x'*	1(1) Subchannel Address	2(2) LVL2ADR CCB address of the routine entered for this level 2 interrupt (CCBL2)	
4(4) ICW0HW SCF of the line being traced IN44HI	5(5) ICW1HW PDF of the line being traced IN44LO	6(6) ICW2HW LCD and PCF of line being traced IN45HI	7(7) ICW3HW SDF of the line being traced IN45LO

*X = Channel Adapter ID

Level 2 Trace Entry (Part 2)
Type 1/2 scanner

0(0) ENTRYID old base = X'20' new base = X'2x'*	1(1) SENS CCB current sense or'ed with final sense	2(2) CMDLRI Command byte for this CCB (CCBCMD)	3(3) Line request information (CCBLRI)
4(4) CACSVSTC CCB character address counter (CCBCAC)	5(5) CCB service/ status flag (CCBSVSTC)	6(6) IN46** Contents of type 2 scanner display register. (Input X'46') Data set leads.	

**Valid only for the last subchannel that had its data interface displayed (Function 6) (X'FFFF' if display request is off.)

Level 2 Trace Entry (Part 1)
(Type 3 scanner)

0(0) ENTRYID X'3x'*	1(1) Subchannel Address	2(2) LVL2ADR CCB address of the routine entered for this level 2 interrupt (CCBL2)
4(4) ICW0HW SCF of the line being traced	5(5) ICW2HW LCD and PCF of the line being traced	6(6) ICW14/ICW15 Scanner Status

*x = Channel Adapter ID

Level 2 Trace Entry (Part 2)
(Type 3 scanner)

0(0) ENTRYID X'4x'*	1(1) Channel Adapter 4 Control Flags	2(2) ICW6HW Cycle Steal Control	3(3) Byte Count
4(4) ICW8/ICW9 Cycle Steal Address		6(6) CCBSVLNK Service Link Field	

*X = Channel Adapter ID

Level 2 Trace Entry (Part 3)
(Type 3 scanner)

0(0) ENTRYID X'5x'*	1(1) IN46 Data Set Interface (Input X'46') X'FF' if display request is off.	2(2) Bottom Buffer Pointer (CCBUF)	
4(4) Top Buffer Pointer (CCBTBUF)		6(6) Bottom Buffer Count (CCBBCNT)	7(7) Top Buffer Count (CCBTCNT)

*x = Channel Adapter ID

Level 2 Trace Entry (Part 4)
(Type 3 scanner)

0(0) ENTRYID X'Fx'*	1(1)
Seven bytes of data from the data buffer.	

* x = Channel Adapter ID

Level 3 Initial Select Trace Entry

0(0) ENTRYID old base = X'60' new base = X'6x'*	1(1) IN61HI Subchannel Address (Input X'61')	2(2) ISCCBCMD Command byte for this CCB (CCBCMD)	3(3) IN61LO Channel I/O command byte (Input X'61')
4(4) IN60HI Initial Selection Control (Input X'60')	5(5) Current Status	CCBADDR Address of the CCB	

* x = Channel adapter ID.

Level 3 Timer Interval Expiration

0(0) ENTRYID old base = X'70' new base = X'7x'*	1(1) Subchannel Address	2(2) ICW1HW SCF of the Line being traced	3(3) Timer Displacement
4(4) CCBCMD Translated EP Command Code	5(5) IN46 Data Set Interface (X'FF' if display request is off) Input X'46'	6(6) Line Control Definer/Parallel Data Field	7(7) Serial Data Field

Level 3 Data Service Trace Entry

0(0) ENTRYID old base = X'90' new base = X'9x'*	1(1) IN63HI Subchannel Address (Input X'63')	2(2) IN62 Contents of Type 1/4 CA data/status control register (Input X'62')
4(4) IN64 First and second data bytes (Input X'64')		6(6) CA4 Extended Buffer Mode IN6C - Extended buffer control or IN65 - Third and fourth data bytes

Level 3 Status Service Trace Entry (Part 1)

0(0) ENTRYID old base = X'80' new base = X'8x'*	1(1) IN63HI Subchannel Address (Input X'63')	2(2) IN62 Contents of Type 1/4 CA data/status control register (Input X'62')	
4(4) STCCBCMD Command bytes for this CCB (CCBCMD)	5(5) IN63LO ESC status (Input X'63')	6(6) If Unit Check Status: Current and final sense are are OR'ed If not Unit Check Status: QCB flags	7(7) Active command count

* x = Channel adapter ID

TRACE CONTROL TABLE

Program: PEP

Size in bytes: 16(10)

Created by: NCP generation

Referenced by: CYATRC and CYADDS

Function: Provides control of the trace table.

0(0) CURRENT Address of the current trace entry			
4(4) FIRST Address of the first entry in the Trace Table			
8(8) LAST Address of the last entry in the Trace Table			
12(C) SIZE Size of each trace table entry	13(D) FLAGS* Flag byte	14(E) COUNTER Counter for Trace Table wrap.	15(F) Spare X'00'

*Indicates a byte expansion follows.

Offset/ Field Name	Bit pattern/ Hex Value	Description
13(D) FLAGS	1...	Dump is waiting for entry.
	.1..	Dump is active now.
	..1.	Trace is active now.
	.... ..1.	Level 2 trace flag.
	1	Level 3 trace flag.

Program: NCP

Size in bytes: 64(40)

Created by: NCP generation.

Pointer to TVS: SYSTVSP field in HWE.

Function: Contains fixed and optional time-out values. This table must be at a 256-byte boundary.

0(0) TVSHI0 Fixed (Idle/RAS).	2(2) TVSHI1 Fixed (0 seconds).
4(4) TVSHI2 Fixed (1 second).	6(6) TVSHI3 Fixed (2.2 seconds).
8(8) TVSHI4 Fixed (3 seconds).	10(A) TVSHI5 Fixed (23.5 seconds).
12(C) TVSHI6 Fixed (60 seconds).	14(E) TVSHI7 Variable.*
16(10) TVSHI8 Variable.*	18(12) TVSHI9 Variable.*
20(14) TVSHIA Variable.*	22(16) TVSHIB Variable.*
24(18) TVSHIC Variable.*	26(1A) TVSHID Variable.*
28(1C) TVSHIE Variable.*	30(1E) TVSHIF Variable.*
32(20) TVSLO0 Fixed (Idle/RAS).	34(22) TVSLO1 Fixed (0 seconds).
36(24) TVSLO2 Fixed (1 second).	38(26) TVSLO3 Fixed (2.0 seconds).
40(28) TVSLO4 Fixed (3 seconds).	42(2A) TVSLO5 Fixed (23.5 seconds).
44(2C) TVSLO6 Fixed (60 seconds)	46(2E) TVSLO7 Variable.*
48(30) TVSLO8 Variable.*	50(32) TVSLO9 Variable.*
52(34) TVSLOA Variable.*	54(36) TVSLOB Variable.*
56(38) TVSLOC Variable.*	58(3A) TVSLOD Variable.*
60(3C) TVSLOE Variable.*	62(3E) TVSLOF Variable.*

*Values determined at NCP generation.

USASCII CHARACTER DECODE DISPLACEMENT TABLE UCDDT

Program: PEP, EP

Size in bytes: 32(20)

Located in: Module CYABL

Created by: NCP and EP generation.

Referenced by: PARTYCK, ASCXMT.

Function: Provides offset in branch table for proper control character processing.

0-31(0-1F)	ASCRCVBT Displacement data.

UNASSIGNED SUBCHANNEL CONTROL BLOCK

USCCB

Program: EP/PEP

Size in bytes: 10(0A) or 12 (0C)

Created by: EP/NCP generation

Pointer to: CHVT entry if low order bit is on.

Function: Used to handle sense, TIO and IO No-op to subchannels within the Hi/Lo range that have no lines. Also used for subchannels defined in a multi-subchannel line access (MSLA) association that are not currently using the line.

8(8) CCBSVLNK Data service queue chain pointer		10(A) CCBLOLNK Status out queue chain pointer	
12(C) CCBSUBCH Subchannel Address	13(D) CCBCFLG Configuration flags	14(E) CCBSTAT Final line status	15(F) CCBSENSE Final line sense
16(10) CCBCMD Current Command	17(11) CCBLRI Line request information	18(12) CCBRADR Multi-subchannel line address CCB address	

WU TRANSLATE TABLE

WU
XLATE
TABLE
(EP)

Program: EP

Size in bytes: 64(40)

Located in: Routine CYAL3H of module CYANUC

Created by: EP generation

Referenced by: Data service routines (for start-stop terminals only).

Function: Assists in translating WU code.

0-63(0-3F)	CYAXTL02 Translation data.

Program: NCP

Size in bytes: 128(80)

Located in: Controller storage beginning at location X'0780'.

Created by: NCP generation.

Pointer to XDA: None. Fixed location.

Function: Contains frequently accessed system control fields.

ROS Contained Code Save Area Sub-Block (XDAROS)

'0780'*	ROSW1 (ROSSVIAR) Save area for program levels 1/2 IAR.
'0784'*	ROSW2 (ROSSVR1) Save area for program levels 1/2 register 1.
'0788'*	ROSW3 (ROSSVR2) Save area for program levels 1/2 register 2.
'078C'*	ROSW4 (ROSSVR3) Save area for program levels 1/2 register 3.
'0790'*	ROSW5 (ROSSVR4) Save area for program levels 1/2 register 4.
'0794'*	ROSW6 (ROSSVR5) Save area for program levels 1/2 register 5.
'0798'*	ROSW7 (ROSSVR6) Save area for program levels 1/2 register 6.
'079C'*	ROSW8 (ROSSVR7) Save area for program levels 1/2 register 7.

*Absolute storage location in hex.

Router Sub-Control Block (XDARTR)

'07A0'*	RTRW1 (RTRSVR1) Save area for program level 2 register 1.
'07A4'*	RTRW2 (RTRSVR2) Save area for program level 2 register 2.
'07A8'*	RTRW3 (RTRSVR3) Save area for program level 2 register 3.
'07AC'*	RTRW4 (RTRSVR4) Save area for program level 2 register 4.
'07B0'*	RTRW5 (RTRSVR5) Save area for program level 2 register 5.
'07B4'*	RTRW6 (RTRSVR6) Save area for program level 2 register 6.
'07B8'*	RTRW7 (RTRSVR7) Save area for program level 2 register 7.
'07BC'*	RTRW8 (RTRSVLAR) Save area for lagging address register (LAR).
'07C0'*	RTRW9 (RTRSVIAR) Save area for program level 2 IAR.

*Absolute storage location in hex.

Supervisor Sub-Control Block (XDASYS)

'07C4'*	SYSW1 (SYSBP1FB) Pointer to first free buffer.
'07C8'*	SYSW2 (SYSTMQC) Pointer to current time period's time-queue QCB.
'07CC'*	SYSW3 (SYSTMQN) Pointer to next time period's time-queue QCB.
'07D0'*	SYSW4 (SYSEBPL) Remembrance of the last buffer in buffer pool.
'07D4'*	SYSW5 (SYSBUFPL) Remembrance of the first buffer in buffer pool.
'07D8'*	SYSW6 (SYSHWE) Pointer to HWE.
'07DC'*	SYSW7 (Reserved).
'07E0'*	SYSW8 (UTILSTSZ) Address of last byte of storage.
'07E4'*	SYSW9 (RTRL2GOI) Level 2 interrupted IAR.
'07E8'*	SYSW10 (SYSRVTAD) Pointer to resource vector table plus 2.
'07EC'*	SYSW11 (Reserved).
'07F0'*	SYSW12 Pointer to logical end of system free buffer pool.
'07F4'*	SYSW13 (SYSBST) Pointer to BH set table.
'07F8'*	SYSW14 Save area for resident dump.
'07FC'*	SYSW15 Save area for resident dump.

*Hex Storage Location

Program: NCP

Size in bytes: 128(80)

Located in: Controller storage beginning at location '0680'.

Created by: NCP generation.

Pointer to XDB: None. Fixed location.

Function: Contains frequently accessed system control fields.

'0680'* Wrap-in-progress byte. If byte = X'00', wrap test is in progress.	'0681'* XDBFILL Pad.	'0682'* PEPFLG** PEP flag bits. (NCP2, #)

RAS Scan-Control Sub-block, XCBRST (This area is unused in NCP2 and NCP#.)

'0683'* RSTB1 (RTRBASP1) Number of lines in each scan of sub-period 1 of CXCCRAST.	'0684'* RSTB2 (RSTWORKB) Number of lines in each scan of current subperiod of CXCCRAST.

Supervisor Control Block (XDBSYS)

'0685'* SYSB1** (SYSMASK) Control byte for dispatcher flags.	'0686'* SYSB2 (SYSBFS) Offset to last byte of buffer.	'0687'* SYSB3 (SYSBFSZD) Buffer size decremented by 4 bytes.	'0688'* SYSB4 (SYSIBC) Buffer size decremented by 5; used as initial count by communications lines.
'0689'* SYSB5** (SYSSMI) Buffer pool and network status.	'068A'* SYSB6** (SYSFLG0) General communication byte.	'068B'* SYSB7** (SYSFLG1) Field used by dump to determine storage load.	'068C'* SYSB8 (SYSAVEK) Number of save areas contained in buffer.
'068D'* UNASSIGNED	'068E'* SYSB10 (SYSDSGC) Type 1 CA data service governor count.	'068F'* SYSB11 (SYSBFSZC) Buffer size decremented by 3.	'0690'* SYSB17 (SYSBUFSZ) True buffer size.

*Absolute storage location in hex.
**Indicates a byte expansion follows.

'0691'* SYSB18 (SYSBLKSZ) Maximum number of buffers in BCU.	'0692'* SYSB19** (SYSFLG2) General communication byte.	'0693'* SYSB20 DAF/OAF Sub-Area (SDLC)	'0694'* SYSB21 DAF/OAF not Sub-Area (SDLC)
'0695'* TIMB11 (TIMEZERO) Zero-second communications error time-out request.	'0696'* TIMB12 (TIMEOTXT) User-specified shoulder tap or default to RAS time-out override.	'0697'* SYSB12 (SYSCSB1) Communication scanner-1 scan limit control. EP Level 1 ERP counter (NCP#)	'0698'* SYSB13 (SYSCSB2) Type 2 scanner-2 scan limit control. EP IPL channel adapter (NCP#)
'0699'* SYSB14 (SYSCSB3) Type 2 scanner-3 scan limit control. Reserved (NCP#)	'069A'* SYSB15 (SYSCSB4) Type 2 scanner-4 scan limit control. Reserved (NCP#)	'069B'* SYSB16 (SYSCSSC) Type 2 scanner scan substitution control. Reserved (NCP#)	

Timer Sub-Control Block (XDBTIM)

'069C'* TIMB1 (TIMTICNT) Count remembrance field.	'069D'* TIMB2 (TIMSICNT) Count remembrance field for system timer.	'069E'* TIMB3 (TIMWKREG) Work register for communication line timer service routine (CXCCLINT).	'069F'* TIMB4 (TIMLNCNT) Number of lines to be serviced before checking for higher priority work.
'06A0'* TIMB5 (TIMRSRES) Work register.	'06A1'* TIMB6 (TIMDSABL) Communications timer time-out to protect against failure to disconnect.	'06A2'* TIMB7 (TIMENABL) Communications timer time-out to protect against failure to connect.	'06A3'* TIMB8 (TIMDIAL) Communications timer time-out to protect against dial failure.
'06A4'* TIMB9 (TIMDIDLY) Communications timer time-out to protect against delay in dial tone.	'06A5'* TIMBA (TIMSWBID) Communications timer time-out to protect against switched line hang-up.		

*Absolute storage location in hex.
**Indicates a byte expansion follows.

Router Sub-Control Block (XDBRTR)

'06A6'* RTRB1 (RTRSPUR) Retry counter for program level 3 unresolved interrupts.	'06A7'* RTRB2 (RTRSPUR1) Retry counter for program level 1 unresolved interrupts.	'06A8'* RTRB3** (RTRINLVL) Zero if level 1 did not detect condition requiring abend. Otherwise indicates program level interrupted by level 1.	'06A9'* RTRB4 (RTRSVB) Save area for abend routine (CXAABND).
'06AA'* RTRB5 (RTRL5KEY) Level 5 protect key at time of protection exception.	'06AB'* RTRB6 (RTRC1KEY) Channel adapter-1 protect key at the time of channel adapter check in level 1 for protection exception.	'06AC'* RTRB7 (RTRC2KEY) Channel adapter-2 protect key at the time of channel adapter check in level 1 for protection exception.	'06AD'* RTRB8 (RTRCAER) Retry counter for program level 1 channel adapter checks.
'06AE'* RTRB9 (RTRIOER) Retry counter for program level 1 in/out instruction checks.	'06AF'* RTRB10 (RTRCMER) Retry counter for program level 1 communication scanner checks.	'06B0'* RTRB11** (RTRLVLIT) Program level interrupted at last program level entry.	'06B1'* RTRB12 (RTR3PUR) Reinitialize program level 3 unresolved interrupt counter.
'06B2'* RTRB13 (RTR1PUR) Reinitialize program level 1 unresolved interrupt counter.	'06B3'* RTRB14 (RTR1CAE) Reinitialize program level 1 channel adapter check counter.	'06B4'* RTRB15 (RTR1IOE) Reinitialize program level 1 in/out instruction check counter.	'06B5'* RTRB16 (RTR1CME) Communication scanner check counter.
'06B6'* RTRB17** (RTRFEESC) Field engineering hook/escape byte.	'06B7'* RTRB18 (RTRS1CTL) Communication scanner-1 mask for LIB disable functions.	'06B8'* RTRB19 (RTRS2CTL) Type 2 scanner-2 mask for LIB disable functions.	'06B9'* RTRB20 (RTRS3CTL) Type 2 scanner-3 mask for LIB disable functions.

*Absolute storage location in hex.
**Indicates a byte expansion follows.

'06BA'* RTRB21 (RTRS4CTL) Type 2 scanner-4 mask for LIB disable functions.	'06BB'* PADDB Excess pad area for expansion.	
		'06C0'* 32 halfwords of invalid op-codes.

If the type 1 scanner is installed, the following fields are included in the last 64 bytes of the XDB:

'06F0'* CCPT1CHR Entry to type 1 communication scanner character service (CXBTRP2)	'06F2'* BCBL2 Secondary entry for type 1 communication scanner character service (CXBTRP20).

*Absolute storage location in hex.

Byte Expansions

Offset/Field Name	Bit Pattern/ Hex Value	Contents
'0682' PEPFLG		PEP flag bits. (NCP2, NCP#)
	1...	EP currently using channel adapter.
'0685' SYSB1 (SYSMASK)		Control byte for dispatcher flags.
	1...	Appendage task in progress.
	.1..	System task is active.
	..1.	Level 3 disabled.
	...1	Level 3 active.
	.... 1...	BHRs in execution.
	.... .1..	Dispatcher service required.
	.... ..1.	Level 4 disabled.
'0689' SYSB5 (SYSSMI)		Buffer pool and network status.
	1...	Quiesce in progress.
	.1..	Deactivate Invite command has been processed, do not poll during service seeking.
	..1.	Auto network shutdown initiated.
	...1	Queued allocations in progress.
	.... 1...	Quiesce message required.
	.... .1..	Channel CWAR invalidated because buffer pool depleted.
	.... ..1.	Waiting for a buffer.

*Indicates a byte expansion follows.

Offset/Field Name	Bit Pattern/ Hex Value	Contents
'068A' SYSB6 (SYSFLG0)		General communication byte.
	1...	Selective system reset.
	.1..	Checkpoint option selected.
	..1.	Auto network shutdown option selected.
	...x	1=system ≤ 64K. 0=system > 64K.
	.... 1...	Return data to host on error.
	.... .1..	Critical situation notification option selected.
	.... ..1.	Online test option selected.
	1	Auto network shutdown was initiated form the panel (NCP 1,2,3,4).
		Reserved (NCP #).
'068B' SYSB7 (SYSFLG1)		Field used by dump to determine storage load. (NCP2, NCP#)
		NCP Level
	X'0x'	NCP1 & 2
	X'3x'	NCP3 & 4
	X'5x'	NCP#
		Load module type
	X'x1'	NCP
	X'x2'	EP
	X'x3'	PEP
	X'x5'	NCP/LR
	X'x6'	PEP/LR
	X'x7'	NCP/R
	X'xA'	EP3.0
	X'xB'	PEP EP3.0
	X'xE'	PEP/LR EP3.0
'0692' SYSB19 (SYSFLG2)		General communication byte.
	1...	At least one type 2 channel adapter is inoperable.
	.x..	Panel support (NCP2, #) 1=NCP 0=EP
	..x.	1=PEP line switch in system, 0=not available.
	...x	(Reserved).
	.... x...	1=CSB1 in diagnostic mode. 0=not.
	.... .x..	1=CSB2 in diagnostic mode. 0=not.
	.... ..x.	1=CSB3 in diagnostic mode. 0=not.
	x	1=CSB4 in diagnostic mode. 0=not.

Offset/Field Name	Bit Pattern/ Hex Value	Contents
'06A8' RTRB3		Program level interrupted by level 1.
	1	Program level 2 interrupted.
	. 1	Program level 3 interrupted.
	. . 1	Program level 4 interrupted.
	. . . 1	Program level 5 interrupted.
'06B0' RTRB11		Last level interrupted, on entry to level 1.
	1	Program level 2 interrupted.
	.1	Program level 3 interrupted.
	. .1	Program level 4 interrupted.
	. . .1	Program level 5 interrupted.
'06B6' RTRB17		Field engineering hook/escape byte.
	1	Allow additional register range (AARR)
	.x	1=dump 0=no dump

Program: NCP

Located in: Controller storage beginning at location X'0700'.

Size in bytes: 128(80)

Created by: NCP generation.

Pointer to XDH: None. Fixed location.

Function: Contains frequently accessed system control fields.

ROS Contained Code Save Area Sub-Block (XDHROS)
The following fields are present in a dump.

'0700' ROSH1 (ROSWK1) Work area for IPL phase 3 channel command word.	'0702' ROSH2 (ROSSVADR) Program level 1 adapter interrupt requests (external register X'76').
'0704' ROSH3 (ROSSVCCR) Program level 1 CCU checks (external register X'7D').	'0706' ROSH4 (ROSSVCCU) Program level 1 CCU interrupt requests (external register X'7E').
'0708' ROSH5 (ROSWK2) Work area for dual ROS and 3704 ROS standalone diagnostics.	'070A' ROSH6 (ROSWK3) Work area for dual ROS type 1 load and 3704 ROS standalone diagnostics.
'070C' ROSH7 (ROSWK4) Work area for standalone channel adapter diagnostics (3704 only).	'070E' ROSH8 (ROSWK5) Work area for 3704 ROS while loading over the type 1 channel adapter.

The following fields are present during program execution.

'0700'*,** TMRF (CYATMPTR) Channel vector table save area for timer.	'0702' TIMH4 (TIMCHTD) Attention delay interval for channel adapter.
'0704' TIMH1 (TIMCHTOS) Attention time-out field for secondary channel adapter.	'0706' TIMH8 (TIMCHTO) Attention time-out field for primary channel adapter

* Not used by EP.
**Fields used only by PEP.

Bit Service Interrupt Module Control Block (8 bytes) (XDHBSP)

'0708' SYSH22 (BSPSAVE) Saved BCBL2 address interlock.	'070A' SYSH23 (BSPFUNC) Function control switch for type 1 scanner panel-initiated ICW display.
'070C' SYSH24 (BSPDISP) Scanner data set leads display.	'070E' RTRH2 (RTRSW) Program level 3 router return entry point (CXCCRTRR).

'0710'** QCBH1 (QCBF)* (QCBFLAGS) EP flags or CHCBAD1*** (CYECHCP1) CA4 CHCB pointer	'0712'** QCBT (QCBTIO) QCB table. or CHCBAD2*** (CYECHCP2) CA4 CHCB pointer
'0714'** PDSOF (PDSOFRST) Address pointer to first CCB in the priority data service out queue. or Reserved (NCP#)	'0716'** PDSOL (PDSOLAST) Address pointer to the last CCB in the priority data service out queue. or Reserved (NCP#)
'0718'** DSOF (DSOFRST) Address pointer to the first CCB in the data service out queue. or TMRF*** (CYATMPTR) Pointer to next CHVT to be checked by timer routine	'071A'** DSOL (DSOLAST) Address pointer to the last CCB on the data service out queue. or PSCA*** (CYEPSCA) Pointer to CHCB initialized for panel use
'071C'** DSIF (DSIFRST) Address pointer to the first CCB in the data service in queue. or LOGADD*** (LOGADDR) Pointer to error log	'071E'** DSIL (DSILAST) Address pointer to the last CCB in the data service in queue. or ABARSAVE*** (SAVEABAR) Contents of ABAR at level 1

'0720'** SOF (SOFRST) Address pointer to the first CCB in the status out queue. or L1INTREQ*** (SAVELINT) Contents of Input X'79' at level 1 (Interrupted level)	'0722'** SOL (SOLAST) Address pointer to the last CCB in the status out queue. or L1CAREQ*** (SAVEADRQ) Contents of Input X'76' at level 1 (Adapter request)
'0724'** SNOF (SNOFRST) Address pointer to the first CCB in the sense out queue. or LOGINDIC*** (LOGIND) Log-trace indicator: X'01'=Log entry to be stored at byte displacements 6 and 7 of the trace entry.	'0726'** SNOL (SNOLAST) Address pointer to the last CCB in the sense out queue. or HNGPGMSW (CYEHUNG) Unhang subchannel switch: X'01'=Action is in progress to unhang subchannels.
'0728'** SSF (SSFRST) Address pointer to the first CCB in the stacked status queue. or Reserved (NCP#)	'072A'** SSL (SSLAST) Address pointer to the last CCB in the stacked status queue. or Reserved (NCP#)

*Indicates a byte expansion follows.
**Fields used only by PEP.
***Fields used only by EP (new base).

Type 1 Scanner QCB for Character Transfer Between Character and Bit Service (XDHCSPQ)

'072C' CSPQH1 (CSPQOFF) First BCB address. BCBs are taken off the chain from this end.	'072E' CSPQH2 (CSPQ2) (CSPQON) Last BCB address. BCBs are added to the chain at this end.
'0730'** SVCO SVCOUT or Reserved (NCP# and EP new base)	'0732' (Reserved)
'0734' (Reserved)	

**Field used only by PEP

QCB for CCBs Passed to Program Level 3 from Program Level 2 (XDHCCPQ)

	'0736' CCPQH1 (CCPQOFF) Address of first CCB. CCB's are taken off the chain from this end.
'0738' CCPQH2 (CCPQON) Address of last CCB. CCB's are added to the chain at this end.	

Timer Sub-Control Block (XDHTIM)

	'073A' TIMH6 Tenths of a second counter.
'073C' TIMH2 (TIMWKTAB) Address of current line timer control/work table.	'073E' TIMH3 (TIMWKTNX) Pointer to the next low-resolution CTB subchain to be serviced.
'0740' TIMH9 (TIMCTBAD) Pointer to start of CXTCTB	'0742' TIMPADH (Reserved)

Supervisor Sub-Control Block (XDHSYS)

'0744' SYSH3 (SYSIQON) Pointer to end of system immediate queue.	'0746' SYSH4 (SYSIQOFF) Pointer to the beginning of the system immediate queue.
'0748' SYSH9 (SYSPQON) Pointer to the end of the system productive queue.	'074A' SYSH10 (SYSPQOFF) Pointer to the beginning of the system productive queue.

'074C' SYSH18 (SYSAQON) Pointer to the end of the system appendage queue.	'074E' SYSH19 (SYSAQOFF) Pointer to the beginning of the system appendage queue.
'0750' SYSH20 (SYSNQON) First triggered non-productive QCB.	'0752' SYSH21 (SYSNQOFF) Last triggered non-productive QCB.
'0754' SYSH1 (SYSBPCBC) Current free buffer count.	'0756' SYSH2 (SYSBPTBC)* Free buffer threshold count + 1.
'0758' SYSH5 (SYSLINES) Number of communication lines.	'075A' SYSH8 (DCTAQCB) (SYSAQCB) System active queue control block.
'075C' SYSH11 (DCTSPOOL) (SYSSPOOL) Pointer to first buffer in system save area pool.	'075E' SYSH12 (DCTSAVEK) (SYSSAVEK) System save area buffer pool allocation count.
'0760' SYSH13 (DCTABND) (SYSABND) System abend code.	'0762' SYSH14 (SYSBINTM) System binary time of day in seconds.
'0764' SYSH15 Second halfword of system binary time of day field	'0766' SYSH16 (SYSCUREQ) Time value for earliest expiring current system timer request.
'0768' SYSH17 Second halfword of SYSCUREQ	'076A' (Reserved).
'076C' (Reserved).	'076E' (Reserved).

*Indicates a byte expansion follows.

Channel Adapter Interrupt Handler Save Area (XDHCHSV)

'0770' CHSVH1 (CHSVBKSZ) Maximum byte count to host per host start I/O.	'0772' CHSVH2 (CHSVCHB) Pointer to CHB or COB.

Communication Control Program Save Area (XDHCCP)

'0774' CCPH1 (CCPSAVE) Save area for program level 3 CCP.

Program Level 1/3 Router Sub-Control Block (XDHRTR)

	'0776' RTRH1 (RTRBARSV) Save area for scanner buffer address register.
'0778' (Reserved).	'077A' (Reserved).
'077C' RTRH6 (RTRL2GOA) Level 2 interrupted IAR (16 bits)	'077E' RTRH10 (RTRCASEL) Save area for CA selection mask.

Byte Expansions

Offset/Field Name	Bit Pattern/ Hex Value	Contents
X'0710' QCBF		EP flags. (PEP)
	1	Set suppress out down.
	.1	Set stacked status service.
	. . 1	Set sense service.
	. . . 1	Set TIO sequence.
	. . . . 1 . . .	Do not dequeue from stacked status queue.
	. . . . . 1 . .	Set panel command.
X'0756' SYSH2 (SYSBPTBC)		User requested slowdown threshold
	0001	50%
	0002	25%
	0003	12%

Section 3: BTU Commands and Modifiers

Following is a list of the BTU commands with a brief description of each modifier and the hex value and acronyms of each.

Contact Command (X'06')

No modifiers

Control Command (X'08')

Command	Modifier (Hex)	Meaning
Display line status	01	Displays current status of the line.
Replace session initiation information for a line	02	Replaces LCB information associated with the initiation.
Activate Invites	03	Allows the NCP to honor all currently resident Invite commands. (NCP1, NCP2).
Deactivate Invites	04	Negates all currently resident Invite commands to prevent terminal-initiated sessions. (NCP1, NCP2).
Copy session initiation information	05	Accesses information associated with the initiation of a session.
Display Device Status	06	Displays the current status of a device. (NCP1, NCP2)
Request device statistics	07	Sends an MDR record to the host for every device that has had activity since the previous request. (NCP1, NCP2).
Display storage	08	Displays 32 contiguous bytes of communications controller storage specified by the user. (NCP1, NCP2).
Set time and date	09	Replaces the time and date that is resident in the communications controller. (NCP1, NCP2).
Set channel mode secondary	0A	Changes the mode of the channel adapters. This command is valid only when it is sent over the current primary channel adapter. (NCP1, NCP2).
Display line's network address	0B	Gives network address of line associated with a device. (NCP#)
Activate line trace	0C	A diagnostic and debugging aid. The following ICW fields are stored into buffers each time a level 2 interrupt occurs: (NCP1, NCP2), • Line Control Definer (LCD) • Primary Control Field (PCF) • Secondary Control Field (SCF) • Parallel Data Field (PDF)
Terminate line trace	0D	Terminates the line trace on a designated line. (NCP1, NCP2).
Change modem speed	12	Allows the user to change the speed at which the appropriate modems operate a line. (NCP2, NCP#).
Set channel mode primary	15	Changes the mode of the channel adapters. This command is valid only when it is sent over the secondary channel adapter. (NCP1, NCP2).
Copy destination mode	18	Accesses the mode information of a device from the DVB. (NCP1, NCP2).
Copy device session information	21	Accesses the device's polling character, addressing characters, and if the device is switched call-out, the dial digits.

Command	Modifier (Hex)	Meaning
Replace device session information	22	Replaces the device's polling characters and addressing characters in the DVB. If the device is switched call-out, it replaces the dial digits in the COE.
Physical disconnect	1C	Breaks the physcial dial connection. (NCP#).
Reset error lock	41	Clears the error lock condition on a device. The first request on the device work queue is honored at the completion of this command.
Reset device queues	42	Returns all commands for a device that were accepted but not yet honored. The response BTU of the returned commands indicates that they were reset.
Request control mode reset	43	Sends RVI on BSC lines. (NCP#).
Reset immediate	44	Ends the current operation on a device without regard to data loss.
Reset online terminal test*	48	Aborts the execution of the chain of online terminal tests, tests diagnostic mode, and clears the device queues.
Switch to backup	4A	Requests switched line backup.
Switch from backup to primary	4C	Requests that the primary line be activated.
Reset Invite	4D	Returns pending Invite command to host. (NCP#).
Reset conditional	50	Tests the status of the top command for the device. If data transfer has not started, the reset takes place immediately. If data transfer has started, the reset is not done.
Reset at end of command	60	Ensures that the device input queue and device work queue are idle and empty so a new sequence of operations can begin.
Switch to EP mode	82	Switches the line mode from NCP to EP. (NCP2).
Switch to NCP mode	83	Switches the line mode from EP to NCP. (NCP2).
Change line service-seeking pause	84	Allows the user to change the length of the pause between service-seeking attempts. (NCP1, NCP2).
Change line negative poll response limit	85	Allows the user to change the number of consecutive negative responses to polling that are acceptable before termination of the Read command. (NCP1, NCP2).
Change session limit	86	Allows the user to change the maximum number of sessions permitted on a line at the same time (NCP1, NCP2).
Change device transmission limit	8C	Allows the user to change the number of EOTs that the controller sends to or receives from a device before servicing other devices on the line. (NCP1, NCP2).
Modify block handler set association	8D	Activates, deactivates, and/or changes the association of a block handler set with a device.
Activate line	98	Activates a line for data transfer. (NCP1, NCP2).

*In NCP3 the command is sent in the Request Unit of a FID1 execute test request.

Command	Modifier (Hex)	Meaning
Deactivate orderly (Line flush)	99	Causes a Deactivate Device operation for each device on the line without changing the device status. Currently resident commands are honored, but no new commands are accepted. (NCP1, NCP2).
Set destination mode	9A	Replaces the device mode flags for a particular device.
Deactivate line halt	C2	Ends the current operation on the line without regard to data loss. All outstanding requests are returned to the host. (NCP1, NCP2).

Disconnect Command (X'07')

Command		Modifier (Hex)	Meaning
Disconnect normal	D	00	No modifier.
Disconnect with Invite	Di	01	Executed as a Disconnect normal command followed by an Invite normal command.
Disconnect with end-of-call	De	02	For switched lines, this modifier results in the physical connection between the terminal and the communications controller being broken. For all other lines, this modifier is the same as normal.
Disconnect with EOC and Invite	Dei	03	Executed as a Disconnect with end-of-call followed by an Invite command.

Invite Command (X'05')

Command		Modifier (Hex)	Meaning
Invite normal	I	00	Unit of data for this command is that specified by the TERMINAL macro at NCP generation.
Invite block	Ib	01	Unit of data for this command is the block (ends with EOB).
Invite message	Im	02	Unit of data for this command is the message (ends with ETX (BSC) or EOT (SS).
Invite transmission	It	03	Unit of data for this command is the transmission (ends with EOT).
Invite transmission with Disconnect	Id	04	Executed as an Invite transmission command followed by a Disconnect command.
Invite with auto restart	Ia	05	Executed as unbounded series of Invite with Disconnect commands. This command must be terminated with a reset request.
Invite perpetual (valid only for clusters)	Ip	06	Executed as an unbounded series of Invite transmission commands with no intervening Disconnect commands.

Read Command (X'01')

Command		Modifier (Hex)	Meaning
Read normal	R	00	Unit of data for this command is that specified by the TERMINAL macro at NCP generation.
Read block	Rb	01	Unit of data for this command is the block (ends with EOB).
Read message	Rm	02	Unit of data for this command is the message (ends with ETX (BSC) or EOT (SS)).

Command		Modifier (Hex)	Meaning
Read transmission	Rt	03	Unit of data for this command is the transmission (ends with EOT).
Read transmission Disconnect	Rd	04	Executed as a Read transmission command followed by a disconnect command.
Read with Invite	Ri	05	Executed as a Read transmission with Disconnect followed by an Invite normal command.

Restart Command (X'04')

Command	Modifier (Hex)	Meaning
Line	00	The BTU contains a checkpoint record for a line.
Device	01	The BTU contains a checkpoint record for a device.
Replace session initiation information for a line	02	The BTU contains session initiation information for a line.
Replace session initiation information for a device	22	The BTU contains session initiation information for a device.

Test Command (X'03')*

Command		Modifier (Hex)	Meaning
Test device normal	T	00	Tests a device.
Test device with Contact	Tc	01	Establishes a session with the device to be tested.
Test device with Disconnect	Td	02	Ends a session with the device to be tested.
Test device with Contact and Disconnect	Tcd	03	Establishes and ends a session with the device to be tested.
Test line normal	Tl	04	Tests a line.
Test line with Contact	Tlc	05	Establishes a session with the line to be tested.
Test line with Disconnect	Tld	06	Ends a session with the line to be tested.
Test line with Contact and Disconnect	Tlcd	07	Establishes and ends a session with the line to be tested.

Write Command (X'02')

Command		Modifier (Hex)	Meaning
Write normal	W	00	Unit of data is one block.
Write with end-of-message	Wm	01	Unit of data is one block followed by the appropriate control sequence or character for an end of message.
Write with end-of-transmission	Wt	02	Unit of data is one block followed by the control sequence for end of transmission.
Write with Disconnect	Wd	03	Executed as a Write transmission command followed by a Disconnect command.
Write with Read (implied EOT)	Wr	06	Executed as a Write command followed by a Read command.

*In NCP# these commands are sent in the Request Unit of a FID1 execute test request.

Command		Modifier (Hex)	Meaning
Write with Invite	Wi	07	Executed as a Write command with end-of-transmission followed by a Disconnect command and then an Invite command.
Write with Contact**	Wc	08	Executed as a Contact command followed by a Write normal command.
Write with Contact** (implied EXT)	Wcm	09	Executed as a Contact command followed by a Write with end-of-message.
Write with Contact** (implied EOT)	Wct	0A	Executed as a Contact command followed by a Write with end-of-transmission.
Write with Contact** and Disconnect (implied ETX & EOT)	Wcd	0B	Executed as a Contact command followed by a Write with end-of-transmission followed by a Disconnect command.
Write with Contact** and Read	Wcr	0E	Executed as a Contact command followed by a Write with end-of-transmission followed by a Read normal command.

**Contact may not begin a telephone connection to a BSC call-in device.

Unsolicited Response (X'77') (See Section 7)

Section 3.1: NCP Channel Commands

Command	Command Code	Description
No-Op	X'03'	This command is required as the last CCW in a Read or Write CCW chain.
Read	X'02'	The Read command is initiated at the NCP. Data at controller storage is transferred to CPU main storage.
Read Start 0	X'32'	This is the first command expected in the Read Channel program after IPL of the NCP. It is also expected after each successful Read Start 1 command.
Read Start 1	X'52'	This is the second command expected in the Read Channel program after IPL of the NCP. It is also expected after each successful Read Start 0 command.
Reset Restart	X'93'	This command causes the NCP to reset its switches to indicate that the last Write Start and Read Start commands were Write Start 1 and Read Start 1.
Write	X'01'	The Write command is initiated to the NCP. Data in the CPU main storage is transferred to the NCP.
Write Break	X'09'	The Write Break command is identical to the Write command except that it is used to indicate that it is the last or only Write command in a chain of Write CCWs.
Write Start 0	X'31'	This is the first command expected in the Write Channel program after IPL of the NCP. It is also expected after each successful Write Start 1 command.
Write Start 1	X'51'	This is the second command expected in the Write Channel program after IPL of the NCP. It is also expected after each successful Write Start 0 command.

Note: Data transfer does not occur on Read Start and Write Start commands.

Section 4: NCP# Network Commands (Request Codes)

Byte 0, bits 1 and 2 of the request response header of the PIU indicates the type of network command in process.

If byte 0, bits 1 and 2 are 11, see "Session Control" below for the network commands located in byte 0 of the request/response unit.

If byte 0, bits 1 and 2 are 10, see "Data Flow Control" below for the network commands located in byte 0 of the request/response.

If byte 0, bits 1 and 2 are 01, see "Network Control" below for the network commands located in byte 0 of the request/response unit.

If byte 0, bits 1 and 2 are 00, see "Function Management Data" below where byte 1 of the request/response unit contains the subcategories for (1) BSC/SS Services (2) Physical Configuration Services, and (3) Physical Maintenance Services. Byte 2 of the request/response unit contains the network commands associated with the subcategories listed.

Session Control

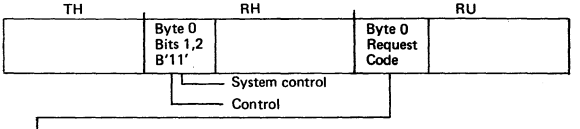

Request Code	Command	Function
X'0D'	Activate Logical	Establishes a session between the SSCP and a logical unit.
X'0E'	Deactivate Logical	Terminates the session between the SSCP and the logical unit.
X'11'	Activate Physical	Establishes a session between the SSCP and the NCP or PU physical services.
X'12'	Deactivate Physical	Terminates the session between the SSCP and the NCP or PU physical services.
X'31'	Bind	Establishes a session between a host application program and a logical unit.
X'32'	Unbind	Terminates the session between the host application program and a logical unit.
X'A0'	Start Data Traffic	Enables data flow in a session. It is the final request in a data flow initialization or recovery procedure.
X'A1'	Clear	Removes and discards all PIUs with the same OAF/DAF pair from the destination process queue.
X'A2'	Set and Test Sequence Numbers	Resynchronizes the specified sequence number.
X'A3'	Request Recovery	Initiates data traffic recovery procedures.

Data Flow Control

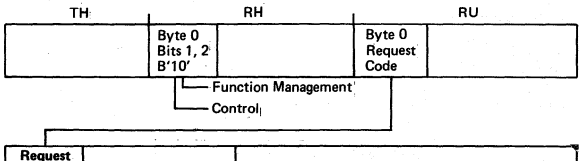

Request Code	Command	Function
X'04'	Logical Unit Status	Sends status information from a logical unit to its session partner.
X'05'	Ready to Receive	Used in bracket protocol to indicate that the bidder is now allowed to initiate a bracket.
X'80'	Quiesce at End of Chain	Directs a function manager to enter the quiesce state at the end of the chain it is currently sending.
X'81'	Quiesce Complete	Indicates that the issuer of the request has placed itself in the quiesce state.
X'82'	Release Quiesce	Releases a function manager from the quiesce state.
X'83'	Cancel	Terminates a partially sent chain of FM data requests.
X'84'	Chase	Requests the receiving function manager to return all outstanding data responses and data flow control responses.
X'C0'	Shutdown	Requests the secondary function manager to enter the highest level of quiesce.
X'C1'	Shutdown Complete	Indicates that the sender has shutdown.
X'C2'	Request Shutdown	Informs the primary function manager that the secondary function manager is at 'end of job' and to issue a Shutdown request.
X'C8'	Bid	Used in bracket protocol to request permission to begin a bracket.
X'C9'	Signal	Sends an expedited signal through the network against the normal flow of data.

Network Control

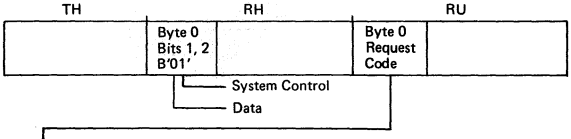

Request Code	Command	Function
X'07'	Auto Network Shutdown Complete	Informs the SSCP that the NCP auto network shutdown is complete.
X'50'	Initialization Complete	Informs the SSCP that the NCP initialization is complete.
X'51'	Switch Line to NCP Mode (BSC/SS)	Switches line from EP mode to NCP mode.
X'52'	Switch Line to EP Mode (BSC/SS)	Switches line from NCP mode to EP mode.

Function Management Data

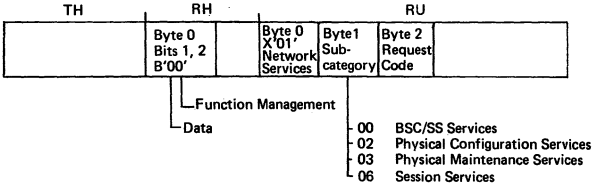

X'00' BSC/SS Services

Request Code	Command	Function
X'01'	Change Device Transmission Limit	Allows user to change the number of EOTs that the NCP sends to or receives from a device on a BSC/SS multipoint line before servicing other devices on the line.
X'02'	Change Line Negative Poll Response Limit	Allows user to change the number of consecutive negative responses to polling that are acceptable before termination of the Read command.
X'03'	Change Line Session Limit	Allows user to change the number of BSC/SS sessions that can be active on this BSC/SS line.
X'04'	Change Line Service Seeking Pause	Allows user to change the length of the pause between service seeking attempts.

X'02' Physical Configuration Services

Request Code	Command	Function
X'01'	Contact	Starts a contact poll operation to an SDLC station or remote communications controller.
X'02'	Discontact	Causes the NCP to stop polling a resource.
X'03'	Load Initial	Initiates the IPL of a remote communications controller.
X'04'	Load Data	Transfers the text of a load module to a remote communications controller.
X'05'	Load Final	Informs the remote communications controller that the load process is complete and requests it to provide the NCP entry point to be given control.
X'06'	Dump Initial	Initiates a remote communications controller storage dump.
X'07'	Dump Data	Causes the remote NCP to send a portion of its storage to the SSCP.
X'08'	Dump Final	Informs the remote communications controller that the dump procedure is complete.
X'09'	Remote Power Off	Invokes a power-off sequence in a remote communications controller.
X'0A'	Activate Link	Activates the data set associated with the SDLC link and initiates the continuous transmission of flag characters.
X'0B'	Deactivate Link	Deactivates the data set associated with the link.
X'0E'	Dial	Causes the NCP to initiate an outbound call on a switched SDLC link. For auto dial, the NCP performs the dial operation with the dial digits provided in the command. For manual dial, the NCP enables the link and the operator performs the dial operation.
X'0F'	Abandon Connection	Causes the physical unit to terminate a switched connection.
X'11'	Set Control Vector—channel attention delay	RU, byte 5 = X'05' Allows the SSCP to change the channel attention delay value in the COB (type 1/4 CA) or CHB (type 2 CA). *Note:* The SSCP is not allowed to change attention delay in a remote NCP.
	Set Control Vector—LU	RU, byte 5 = X'04' Changes dynamic fields in the logical unit control block (LUB) and completes initialization of the logical unit vector table (LUV).
	Set Control Vector—PU	RU, byte 5 = X'03' Changes dynamic fields in the common physical unit block (CUB) that are associated with the specified physical unit.
	Set Control Vector—NCP Subarea	RU, byte 5 = X'02' Associates a remote NCP's subarea with a particular SDLC link.
	Set State Vector—time and date	RU, byte 5 = X'01' Allows the SSCP to replace the time and date in the NCP. The time is maintained in 24 hour continental time. *Note:* The SSCP is not allowed to retrieve the time and date with a Sense State Vector request.

X'02' Physical Configuration Services (Cont.)

Request Code	Command	Function
X'14'	Entering Slowdown	Informs the SSCP that the normal flow of data in the NCP is impeded due to limited available buffers.
X'15'	Exiting Slowdown	Informs the SSCP that the limitation on NCP buffers is lifted. Normal data flow to the NCP may resume.
X'16'	Answer	Causes the NCP to put the specified link in answer mode. This enables the link to answer incoming calls.
X'17'	Abandon Answer Mode	Causes the NCP to discontinue answer mode on the specified link.
X'18'	Abandon Dial	Causes the NCP to halt the dialing operation over the specified link.
X'19'	Assign Network Addresses	Assigns a set of network addresses to a specified physical unit. (SDLC switched link only)
X'1A'	Free Network Addresses	Causes the NCP to free the network addresses that were assigned to a physical unit.
X'80'	Contacted	Informs the SSCP of conditions presently existing in the resource.
X'81'	Inoperative	Reports a loss of contact to the SSCP.
X'84'	Off Hook	Informs the SSCP that a physical connection has been established between the NCP and a physical unit. (Contains the station ID)

X'03' Physical Maintenance Services

Request Code	Command	Function
X'01'	Execute Test	Causes the NCP to execute an online terminal test (OLTT) or online link test (OLLT) for the resource specified by the network address.
X'02'	Activate Line Trace	Causes the following ICW fields to be stored into buffers each time a level 2 interrupt occurs: • Line Control Definer (LCD) • Primary Control Field (PCF) • Secondary Control Field (SCF) • Parallel Data Field (PDF) This is a diagnostic and debugging aid.
X'03'	Deactivate Line Trace	Terminates line trace.
X'81'	Record Maintenance Statistics	Sent to SSCP whenever certain error conditions exist.
X'82'	Record Test Data	Informs the SSCP of the current status of an online terminal test (OLTT) or online line test (OLLT).
X'83'	Record Trace Data	Sends line trace information to the SSCP.

X'06' Session Services

Request Code	Command	Function
X'04'	NS Procedure Error	Informs the issuer of a non-sequenced request that an error occurred after the request was accepted but before the procedure completed.
X'81'	Initiate Self	Allows a logical unit to request a session with the SSCP.
X'83'	Terminate Self	Allows a logical unit to request the termination of a session with the SSCP.

The following command sequence is followed for bring-up and session initiation for switched SDLC. The non-switched SDLC sequence is provided by skipping those entries identified as being required for switched. The following command sequence is found on a PIU trace (VTAM 10 trace).

Command	Description
Activate Physical	From SSCP to NCP physical services
Initialization Complete	From NCP physical services to SSCP
Start Data Traffic	From SSCP to NCP physical services
Set State Vector	From SSCP to NCP physical services
Set Control Vector	From SSCP to NCP physical services
Activate Link	From SSCP to NCP physical services
Answer or Dial (Switched)	SSCP to physical services CPM-OUT
Off-Hook (Switched)	Physical services to SSCP
Set Control Vector PU (Switched)	SSCP to physical services
Contact	From SSCP to NCP physical services
Contacted	NCP physical services to SSCP
Activate Physical	SSCP to CPU physical unit process queue
Assign Network Addresses (Switched)	SSCP to physical services
Set Control Vector LU (Switched)	SSCP to physical services
Activate Logical	SSCP to LU/SSCP process queue
Initiate Self (Logical Unit initiated logon only)	From LU to SSCP
Bind Command	Host application to LU
Start Data Traffic	From host application to LU
Inoperative*	From NCP physical services to SSCP

*May be required at any point in the command sequences after the Activate Link command.

Section 5: SDLC Commands and Responses (NCP#)

Non-sequenced Format:

Commands	Control Field	Function
Set Initialization Mode Command (SIM).	0001 0111	Initiates system-specified procedures at the receiving secondary station for the purpose of initializing link-level functions.
Disconnect Command (DISC).	0101 0011	Terminates other modes and places the receiving secondary station effectively offline.
Set Normal Response Mode Command (SNRM).	1001 0011	Subordinates the receiving secondary station to the transmitting primary station.
Exchange Identification (XID)	1011 1111	Used by the NCP to solicit the station identification from a secondary station.
Test	1111 0011	SDLC Test command.
Responses		
Request Initialization Response (RQI).	0001 0111	Notifies the primary station that the secondary station has a need for a SIM command.
Request Online Response (ROL)	0001 1111	Indicates that the transmitting secondary station is disconnected.
Nonsequenced Acknowledgment Response (NSA).	0111 0011	Affirms a response to a SNRM or SIM command.
Command Reject Response (CMDR).	1001 0111	Rejects a non-valid command.

Supervisory Format:

Commands	Control Field	Function
Receive Ready (RR)	xxxx 0001	Indicates the originating station is ready to receive.
Receive Not Ready (RNR)	xxxx 0101	Indicates a temporary busy condition in which no frames requiring buffer space can be accepted.
Reject (REJ)	xxxx 1001	Requests transmission or retransmission of sequenced information.
	xxxx 1101	Reserved

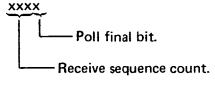

I Format:

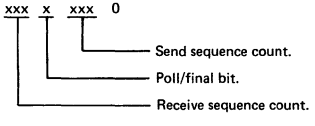

Section 6: EP Command Codes

Operation Code		Command
EP**	S/360 and S/370	
0000 0 . . .	00	Test I/O
0000 1 . . .	01	Write
0001 0 . . .	02	Read
0001 1 . . .	03	I/O No-op
0001 1 . . .	12	Diagnostic Read*
0001 1 . . .	06	Diagnostic Write*
0001 1 . . .	13	Set Address Zero*
0001 1 . . .	17	Set Address One*
0001 1 . . .	1B	Set Address Two*
0001 1 . . .	1F	Set Address Three*
0001 1 . . .	1D	Diagnostic Poll*
0010 0 . . .	04	Sense
0010 1 . . .	15	Wrap
0011 0 . . .	06	Prepare
0100 0 . . .	41	Write Break
0100 1 . . .	09	Poll
0101 0 . . .	0A	Inhibit
0101 1 . . .	19	Poll SOH
0110 0 . . .	42	Read Clear
0110 1 . . .	0D	Break
0111 0 . . .	0E	Search
0111 1 . . .	2F	Disable
1000 0 . . .	27	Enable
1000 1 . . .	29	Dial
1001 0 . . .	1E	Address Prepare
1001 1 . . .	23	Set Mode
Flags used during initial command execution (ICE)		
. . . . .1 . .		End with intervention required instead of command reject.
. . . . . .1 .		Sense command
. 1		Line must be enabled before this is accepted.
Flags used after ICE		
. . . . .1 . .		Command end
. . . . . .1 .		Pseudo read
. 1		Pseudo read end

*Treated by the emulation program as a no-op.
**The EP command is located in the CCBCMD field of the EP CCB.

Section 7: BTU Responses

This appendix lists the responses that are returned to the host in the BTU. The response comprises two bytes: system response (BCUSRES) and extended response (BCULRES). The extended response is also referred to as the line response.

System Response Byte

0 00 0 0000

- 0000 — System response code
- 00 — Phase to which the response applies
  - Phase 0 - Validation of BTU. There is no normal response returned to the host if the command is valid. However, unsolicited responses are sometimes sent to the host in phase 0 that are not related to the command.
  - Phase 1 - I/O to a communications line.
  - Phase 2 - Additional I/O to a communications line when multiple I/O operations take place. For example, Write with Read, Write with Disconnect, etc.
  - Phase 3 - Usually the final normal response to a command. However, if the command has an Invite modifier (for example, Write with Invite), a phase 3 normal response may be returned for the write portion of the command and a phase 0 error response returned later for the Invite portion of the command.
- 0 — 1=error response, 0=normal response

Command & Modifier	Phase 0* Error	Phase 1		Phase 2		Phase 3** Normal
		Error	Normal	Error	Normal	
I	Any part	I	I			I(final)
Ib	Any part	I				Ib
Im	Any part	I	I			Im
It	Any part	I	I			It
Id	Any part	I	I	D		Id
Ia	Any part	I	I	D		Ia
Ip	Any part	I	I or R			It or Rt
D	Any part	D				D
De	Any part	D				De
Di	Any part	D/I	I			D/I(final)
Dei	Any part	D/I	I			D/I(final)
W	Any part	W				W
Wm	Any part	W				Wm
Wt	Any part	W		Wt		Wt
Wd	Any part	W		D		Wd
Wi	Any part	W/I	I	D		Wd/I(final)
Wr	Any part	W		Wt/R	Wt/R	R (final)
Wc	Any part	C/W				Wc
Wcm	Any part	C/W				Wcm
Wct	Any part	C/W		Wt		Wct
Wcd	Any part	C/W		D		Wcd
Wcr	Any part	C/W		Wt/R	Wc/R	R(final)
R	Any part	R	R			R(final)
Rb	Any part	R				R(final)
Rm	Any part	R	R			Rm
Rt	Any part	R	R			Rt
Rd	Any part	R	R	D		Rd
Ri	Any part	R/I	R/I	D		Rd/I(final)
C	Any part	C				C

*Phase 0 error responses can be returned for any portion of a BTU on which there is a validity error.
**There are no phase 3 error responses for TP commands.

Phase 0 Error Responses

Response (hex)	Meaning
81	Invalid resource ID.
82	Invalid command.
83	Invalid modifier.
84	Reset or Deactivate in progress.
85	Device inactive.
86	Line inactive.
87	Command not valid for resource.
88	Command syntax error.
89	Command rejected, did not conform to BSC specifications.
8A	Invalid control data length.
8B	Reset not performed.
8C	Data not resident in storage.
8D	Dial set queue limit reached.
8E	Line and device incompatibility on switched call-out.
8F	Invalid text length.
91	Invalid control data.
92	Incomplete BTU.
93	Deactivate Line Orderly or Deactivate Device command rejected because of error on one or more of the devices.
94	Data in use.
95	Invalid Control command modifier or Control command not valid for resource.
96	OLTT command rejected, queue not empty.
97	OLT active. Non-OLT command rejected.
98	Multiple Dial requests.
99	Mode inconsistency (Request was made to alter the mode of a resource, but the resource was already in that mode.)
9A	Buffers required to complete the operation are not available; system in slowdown mode.
9B	Command rejected, system in auto network shutdown.
9C	Command rejected, error lock set.
9D	Command rejected, secondary channel adapter not operative.
9E	Command rejected, line deactivated or command reset.

Phase 0 Unsolicited Responses

Response (hex)	Meaning
00	Invalid bit configuration.
01	Attention time-out or unrecoverable error on current primary channel adapter.
03	Device association completed.
04	MTA device identified.
05	Channel adapter set to primary mode.
06	Channel adapter set to secondary mode.
07	Entering system slowdown.
08	Leaving system slowdown.
09	Initialization complete.
0A	MDR records accompany the BTU.
1B	Auto network shutdown initiated via channel time-out or channel adapter failure.
1C	Auto network shutdown initiated via panel.
1D	Network shut down via auto network shutdown.
1E	Serviceability aid—host logging.

Phase 1, 2, and 3 Error Responses

Response (hex)			
Phase 1	**Phase 2**	**Phase 3**	**Meaning**
A0	C0	E0	Data check.
A1	C1	E1	Possible intervention required.
A2	C2	E2	Intervention required.
A3	C3	E3	Negative poll limit reached—WAIT option.
A4	C4	E4	Yielded to contention.
A5	C5	E5	Device error—BSC status pending.
A6	C6	E6	BSC ID error.
A7	C7	E7	Line trace terminated due to error.
A8	C8	E8	OLTT command or Reset OLTT Control command processing terminated.
A9	C9	E9	Session not started due to hardware error.
AA	CA	EA	BSC error status message.
AB	CB	EB	General poll operation aborted due to error.
AC			Fanout backup limit exceeded
	CC		Not used
		EC	Disconnected
B3	D3	F3	Break received on this block.
B8	D8	F8	Contact rejected—session started.
B9	D9	F9	Dial data inconsistency.
BA	DA	FA	Buffers required to complete operation are not available.
BE	DE	FE	Command rejected, line deactivated or command reset.

Phase 1, 2, and 3 Normal Responses

Response (hex)			
Phase 1	**Phase 2**	**Phase 3**	**Meaning**
20	40	60	Command executed OK this far. (Pertains to all commands not represented by 22, 42, or 62.)
21	41	61	Leading graphics received.
22	42	62	One of the following commands executed OK this far: • Read or Invite • Write (in conversational mode). • WR or WCR commands in the read phase.
23	43	63	Negative poll limit reached—QUEUE option.
24	44	64	OLTT request message.
25	45	65	BSC status message.
26	46	66	Negative poll limit reached—NOWAIT option.
27	47	67	Line trace output.

The following responses occur when the line is in monitor mode:

Response (Hex)	Meaning
EC	Disconnect received
ED	IPL required
EE	Permanent trunk error
EF	Block from queue caused an abnormal condition.

Extended Response Byte

The extended response byte contains either a normal extended response or a conditional extended response. The normal extended response appears in both BCULRES and the second byte of IOBSTAT. It has the following format.

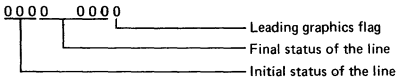

A conditional extended response applies to one specific system response and does not have a fixed format. It appears only in BCULRES.

Extended Responses

	Initial Status
000	Control mode.
001	Text mode.
010	Transparent text mode (BSC only).
011	Heading mode (BSC only).
100	Special.
111	Hardware/user error.
	Normal Final Status when Intial Status = Control, Text, Transparent Text, or Heading
. . .0 000 .	Time-out – Some character(s) have been received, but may not be stored (Control mode).
. . .0 010 .	Cutoff – This bit indicates that a controlled length field (for example, an ID field) was too long and was cut off at the end of the correct length.
. . .0 011 .	Reply to transmitted data was an ENQ – transmission is aborted.
. . .0 100 .	An EOT was received on a block that began without an STX, SOH, or Ⓓ , ie., text received in control mode.
. . .0 101 .	End of DLE control (BSC only).
. . .0 110 .	Wrong ACK – ACK1 received when ACK0 was expected, or ACK0 was received when ACK1 was expected.
. . .0 111 .	For start-stop, NAK returned in response to a selection, poll, write, or NAK reply to text. For BSC, an EOT returned in response to a selection, poll, or write.
. . .1 000 .	Received sub-block.
. . .1 001 .	End of text.
. . .1 010 .	End of block.
. . .1 011 .	Data or leading graphics received with an ENQ, or ENQ by itself.
. . .1 100 .	EOT received with no errors.
. . .1 101 .	Reverse interrupt.
. . .1 110 .	Positive ACK returned and no errors indicated on a write operation.
. . .1 111 .	WACK received (could be an error condition).

Final Status when Initial Status = Special

. . .0 000 .	Time-out with nothing received.
. . .0 001 .	Command reject — should not occur error — set by the communications scanner code.
. . .0 010 .	Level 2 and level 3 buffer pools depleted — level 5 may still have buffers left. When this bit is on, data is lost.
. . .0 011 .	Selected (BSC tributary only).
. . .0 100 .	Received disconnect signal on TWX or DLE/EOT on BSC.
. . .0 101 .	Data was received when it was not expected.
. . .0 110 .	A reset occurred.
. . .0 111 .	The device has been polled.
. . .1 000 .	Transmitted sub-block (NCP2, NCP#).
. . .1 001 .	An EOT was sent after a specified number of WACKs were received in response to a request or operation.
. . .1 010 .	Received break in text (two consecutive stop-bit errors). The last two characters stored are invalid. They may be incorrect length control characters or all spaces.
. . .1 011 .	Polling stop — Device was polled to the polling limit and responded negatively, or a Read Initial with a single polling modifier was directed to a polled line.
. . .1 100 .	EOT transmitted.
. . .1 101 .	Received a break signal while transmitting.
. . .1 110 .	Disconnected.
. . .1 111 .	Connected.

Final Status when Initial Status = Hardware/User Error

. . .0 000 .	User error (MTA support), normally indicates an incorrect NCP generation.
. . .0 010 .	Level 1 communication scanner check.
. . .0 100 .	Communications line adapter check—Occurs whenever a level 2 interrupt (not dependent on an external source) is expected and not received. For example, after starting to transmit, a level 2 interrupt is expected. If none is returned, the internal clock should be suspected of not working properly.
. . .0 101 .	Communications scanner adapter feedback check. (Signaled when LCP goes to 'F'.)
. . .0 110 .	Equipment check.
. . .1 000 .	Modem error — Comes on with the modem check bit in the SCF field of the ICW. Not used for single current telegraph.
. . .1 001 .	Modem transmit clock or clear-to-send error — Comes on when in the transmit mode and the first character cannot be transmitted. Indicates an external clock error.
. . .1 010 .	DSR-on check — For leased lines, comes on if data-set-ready doesn't come up within three seconds after data-terminal-ready.
. . .1 100 .	DSR-off check — For switched lines, comes on if data-set-ready doesn't drop within three seconds of data-terminal-ready.
. . .1 110 .	ACU check — No response was received from an ACU when one was expected. If this bit is on, check that the NCP generation parameter that sets the autocall timeout contains a greater value than the timeout duration in the ACU.
. . .1 1111	Program failure.

Leading Graphics Flag

. 1	Leading graphics received.

Conditional Extended Responses

Extended Response when System Response = X'9F'	
X'82'	Change-speed command is invalid for the line.
X'83'	Specified line is unavailable.
X'84'	Error lock.
X'E0'	Switch-line-mode command was received but line not generated as mode-switchable.
X'E1'	Switch-line-mode command was received but a command is already executing on the line or line trace is active on the line.

Section 8: NCP# Exception Responses

Exception responses are identified by RH byte 0, bit 5. If this bit is on, the RU is displaced four bytes to make room for sense data. The first two bytes (bytes 0 and 1) contain the exception response code. The second two bytes (bytes 3 and 4) contain user-specified sense information.

Exception Response Code	Meaning
X'0064'	User sense data: invalid BSC device.
X'0065'	User sense data: inactive BSC device.
X'0801'	Request reject: resource not available.
X'0805'	Request reject: session limit exceeded.
X'0806'	Request reject: resource unknown.
X'0809'	Request reject: mode inconsistency.
X'080A'	Request reject: permission rejected.
X'080C'	Request reject: function not supported.
X'0812'	Request reject: insufficient resource.
X'0813'	Request reject: bracket bid reject.
X'0814'	Request reject: physical unit not active.
X'0815'	Request reject: function active.
X'0816'	Request reject: function inactive.
X'0817'	Request reject: link inactive.
X'0818'	Request reject: link procedure in progress.
X'081A'	Request reject: sequence error.
X'081C'	Request reject: function not executable.
X'0820'	Request reject: control vector error.
X'0821'	Request reject: invalid session parameters.
X'0822'	Request reject: link procedure failure.
X'1001'	Request error: RU data error.
X'1002'	Request error: RU length error.
X'1003'	Request error: function not supported.
X'1007'	Request error: category not supported.
X'2001'	State error: sequence number.
X'2003'	State error: bracket.
X'2005'	State error: data traffic not started.
X'4006'	RH error: exception not allowed.
X'4008'	RH error: pacing not supported.
X'8002'	Path error: link failure.
X'8004'	Path error: unrecognized DAF.
X'8005'	Path error: no session.
X'8006'	Path error: invalid FID.
X'8007'	Path error: segmentation not supported.
X'800C'	Path error: DCF error.
X'800D'	Path error: lost contact.

Section 9: 3704 and 3705 Instruction Set

Instruction	Format Code	Mnemonic	Operand Field Format
Add Character Register	RR	ACR	R1(N1),R2(N2)
Add Halfword Register	RR	AHR	R1,R2
Add Register	RR	AR	R1,R2
Add Register Immediate	RI	ARI	R(N),1
And Character Register	RR	NCR	R1(N),R2(N2)
And Halfword Register	RR	NHR	R1,R2
And Register	RR	NR	R1,R2
And Register Immediate	RI	NRI	R(N),1
Branch	RT	B	T
Branch and Link	RA	BAL	R,A
Branch and Link Register	RR	BALR	R1,R2
Branch on Bit	RT	BB	R(N,M),T
Branch on Count	RT	BCT	R(N),T
Branch on C Latch	RT	BCL	T
Branch on Z Latch	RT	BZL	T
Compare Character Register	RR	CCR	R1(N1),R2(N2)
Compare Halfword Register	RR	CHR	R1,R2
Compare Register	RR	CR	R1,R2
Compare Register Immediate	RI	CRI	R(N),1
Exclusive Or Character Register	RR	XCR	R1(N1),R2(N2)
Exclusive Or Halfword Register	RR	XHR	R1,R2
Exclusive Or Register	RR	XR	R1,R2
Exclusive Or Register Immediate	RI	XRI	R(N),1
Exit	EXIT	EXIT	
Input	RE	IN	R,E
Insert Character	RS	IC	R(N),D(B)
Insert Character and Count	RSA	ICT	R(N),B
Load	RS	L	R,D(B)
Load Address	RA	LA	R,A
Load Character Register	RR	LCR	R1(N1),R2(N2)
Load Character with Offset Reg.	RR	LCOR	R1(N1),R2(N2)
Load Halfword	RS	LH	R,D(B)
Load Halfword Register	RR	LHR	R1,R2
Load Halfword with Offset Reg.	RR	LHOR	R1,R2
Load Register	RR	LR	R1,R2
Load Register Immediate	RI	LRI	R(N),1
Load with Offset Register	RR	LOR	R1,R2
Or Character Register	RR	OCR	R1(N1),R2(N2)
Or Halfword Register	RR	OHR	R1,R2
Or Register	RR	OR	R1,R2
Or Register Immediate	RI	ORI	R(N),1
Output	RE	OUT	R,E
Store	RS	ST	R,D(B)
Store Character	RS	STC	R(N),D(B)
Store Character and Count	RSA	STCT	R(N),B
Store Halfword	RS	STH	R,D(B)
Subtract Character Register	RR	SCR	R1(N1),R2(N2)
Subtract Halfword Register	RR	SHR	R1,R2
Subtract Register	RR	SR	R1,R2
Subtract Register Immediate	RI	SRI	R(N),1
Test Register Under Mask	RI	TRM	R(N),1

3704 and 3705 Instruction Decode

These charts may be used to decode the four digit hexadecimal representation of a 3704 and 3705 machine instruction.

Use the chart as follows:

(1) Locate the first digit (D_1) of the instruction in hex in the column of numbers on the left side of Table I.
(2) Locate the second digit of the instruction in the row of numbers at the top of Table I.
(3) Go to the intersection of the column and row represented by the two numbers. You will find either the mnemonic or a reference to Table II, Table III, or Table IV.

Tables II and IV require that you locate digit three (D_3) only of the instruction in the row of digits at the top of each chart. Follow the instructions for Table I to use Table III, substituting digit three (D_3) and digit four (D_4).

Table I

(D_1) \ (D_2)	0 1 2 3 4 5 6 7	8 9 A B C D E F
0	Table III	Table II
1		
2		
3		
4		
5		
6		
7		
8	LRI	BZL
9	ARI	BCL
A	SRI	B
B	CRI	Table IV
C	XRI	BB
D	ORI	
E	NRI	
F	TRM	

Table II

(D_3)	0 1 2 3 4 5 6 7	8 9 A B C D E F
	IC	STC

Table III

(D3) \ (D4)	0	1	2	3	4	5	6	7	8	9	A	B	C	D	E	F
0	*	LH	L	LH	OUT	LH	L	LH	LCR	LH	L	LH	IN	LH	L	LH
1	ICT								ACR							
2	*								SCR							
3	STCT								CCR							
4	BALR								XCR							
5									OCR							
6	*								NCR							
7									LCOR							
8	LHR	STH	ST	STH		STH	ST	STH	LR	STH	ST	STH		STH	ST	STH
9	AHR								AR							
A	SHR								SR							
B	CHR								CR							
C	XHR								XR							
D	OHR								OR							
E	NHR								NR							
F	LHOR								LOR							

Table IV

(D3) 0	1	2	3	4	5	6	7	8	9	A	B	C	D	E	F
BAL	*	LA	*	EXIT	*			BCT							

Four Bytes

*Denotes invalid operation.

Section 10. Input/Output (External) Register Functions

INPUT REGISTERS

Register (Hex)	Function	
	Type 1 Scanner	Type 2 Scanner
40	Unused.	Interface address.
41	Interface address.	Unused.
42	Control A.	Unused.
43	Control B, C.	Check register.
44	Status.	ICW input register 0-15.
45	Unused.	ICW input register 16-31.
46	Unused.	Display register.
47	Unused.	ICW input register 32-45.
	Type 3 Scanner	
40	Interface address	
41	High speed select	
42	DBAR/Check register0	
43	Check register	
44	ICW byte 0 and PDF array	
45	ICW bytes 2 and 3-LCD/PCF/SDF	
46	Display register	
47	ICW bytes 4 and 5	
48	ICW bytes 6 and 7-Cycle steal control	
49	ICW bytes 8 and 9-Cycle steal address	
4A	ICW bytes 10 and 11-BCC	
4B	ICW byte 16-Extended PCF	
4C	PDF array bits 0-10	
4E	ICW bytes 12 and 13-PDF array control	
	Type 2 CA	
50	INCWAR	
51	OUTCWAR	
52	Control word byte count.	
53	Sense register.	
54	Status register.	
55	Control register.	
56	Check register.	
57	Unused.	
58	Channel bus out diagnostic register.	
59	Cycle steal address register.	
5A	Channel adapter data buffer.	
5B	Channel tag diagnostic register.	
5C	Command register.	
5D	Unused.	
5E	Unused.	
	Type 1/4 CA	
60	Initial selection control.	
61	Initial selection address and command.	
62	Data/status control.	
63	Address and ESC status.	
64	Data buffer bytes 1 and 2.	
65	Data buffer bytes 3 and 4.	
66	NSC status byte.	
67	Control.	

INPUT REGISTERS (cont)

Register (Hex)	Function
	Diskette
68	Level 1 status.
69	Level 3 status.
6A	Parallel data register placed on INBUS.
6B	IPL information.
	CCU
70	Storage size installed.
71	Panel A address/data bits.
72	Panel display function select switch controls.
73	Insert storage protection key.
74	Lagging address register (LAR).
76	Adapter level 1 interrupt request.
77	Adapter level 2 or 3 interrupt request.
79	Utility.
7B	BSC CRC register.
7C	SDLC CRC register
7D	CCU check register.
7E	CCU level 1 interrupt request.
7F	CCU level 2,3, or 4 interrupt request.

OUTPUT REGISTERS

Register (Hex)	Function	
	Type 1 Scanner	Type 2 Scanner
40	Set Mode bit override and override remember.	Interface address.
41	Start scanner and reset L2 bit service request.	Address substitution control.
42	Control A.	Upper scan limit control.
43	Control B.	Control.
44	General control.	ICW 0-15.
45	Scanner control.	ICW 16-23.
46	Set character service pending, start scanner, reset L2 bit request.	ICW 24-33,44.
47	Force bit service L2 request.	ICW 34-43.
	Type 3 Scanner	
40	ABAR loader	
41	Substitution control loader	
42	DBAR/Scan limits	
43	Control	
44	SCF/PDF	
45	LCD/PCF/EPCF	
46	SDF	
47	Miscellaneous ICW bits	
48	Cycle steal control and byte count	
49	Cycle steal address register	
4A	Block check character (BCC)	
4C	PDF array	
4D	ICW cycle steal PDFs (SDLC)	
4E	Cycle steal/PDF pointers-ICW control	
4F	Status bytes	
	Type 2 CA	
50	INCWAR.	
51	OUTCWAR.	
53	Sense register.	
54	Status register.	
55	Control register.	
56	Reset control register bits.	
57	Channel adapter mode register.	
58	Channel bus out diagnostic register.	
5A	Channel adapter data buffer.	
5B	Channel tag diagnostic register.	
	Type 1/4 CA	
60	Reset initial selection.	
62	Data status control.	
63	Address and ESC status.	
64	Data buffer bytes 1 and 2.	
65	Data buffer bytes 3 and 4.	
66	NSC status byte.	
67	Control.	

OUTPUT REGISTERS (cont)

Register (Hex)	Function
	Diskette
68	Control-arm.
69	Control-Read/Write.
6A	Parallel data register placed on OUTBUS.
6B	IPL Information.
	CCU
70	Hard stop.
71	Display register 1.
72	Display register 2.
73	Set key.
77	Miscellaneous Control.
78	Force CCU checks.
79	Utility.
7C	Set PCI L3.
7D	Set PCI L4.
7E	Set mask bits.
7F	Reset mask bits.

Section 10.1 Modem Leads

INPUT REGISTER X'46' contains the modem leads.

		Data Line	Autocall
Byte 0,	Bit 0	Clear to Send	Abandon Call and Retry
	Bit 1	Ring Indicator	Present Next Digit
	Bit 2	Data Set Ready	Data Line Occupied
	Bit 3	Receive Line Signal	Power Indicator
	Bit 4	Receive Data Bit Buffer	Zero (reserved)
	Bit 5	Diagnostic Wrap Mode	Call Originating Status
	Bit 6	Bit Service Request	Bit Service Request
	Bit 7	Zero (reserved)	Zero (reserved)
Byte 1,	Bit 0	0	0
	Bit 1	0	0
	Bit 2	0	0
	Bit 3	0	0
	Bit 4	0	0
	Bit 5	0	0
	Bit 6	0	0
	Bit 7	0	0

Section 11. Interface Control Word (ICW)

Type 2 Scanner

OUTPUT X'44'	OUTPUT X'45'	OUTPUT X'46'**	OUTPUT X'47'
0 15	16 23	24 33	34 43

INPUT X'44'	INPUT X'45'	INPUT X'47'
0 15	16 31	32 45

0 7	8 15	16 19	20 23	24 33	34 47
SCF Secondary Control Field	PDF Parallel Data Field	LCD Line Control Definer	PCF* Primary Control Field	SDF Serial Data Field	Flags

*All bits in the PCF are reset to zero with power-on reset.

**Also sets bit 44.

ICW Field Definitions

SCF

Bit

0 Stop bit check/receive break/abort (SDLC)
1 Service request
2 Character overrun/underrun
3 Modem check
4 Receive line signal detector
5 Flag detection/disable zero-insert remembrance (SDLC)
6 Program flag
7 Pad flag/disable zero-insert control (SDLC)

PDF Autocall Interface

Bit

4 Digit NBR 8
5 Digit NBR 4
6 Digit NBR 2
7 Digit NBR 1

LCD

Hex

0 SS 9/6
1
2 SS 8/5
3 Autocall
4 SS 9/7
5 SS 10/7
6 SS 10/8
7 SS 11/8
8 SDLC monitor for flag
9 SDLC 8-bit byte-length
A Reserved
B Reserved
C BSC EBCDIC
D BSC ASCII
E Reserved
F Feedback check

PCF Start/Stop Line Interface

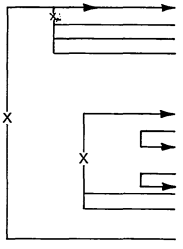

Hex	
0	No-op
1	Set mode
2	Monitor DSR on
3	Monitor RI/DSR on
4	
5	Unused
6	Unused
7	Receive
8	Transmit initial
9	Transmit normal
A	Transmit break
B	Prepare to turn
C	Transmit turn, request-to-send off
D	Transmit turn, request-to-send on
E	Unused
F	Disable

PCF BSC Line Interface

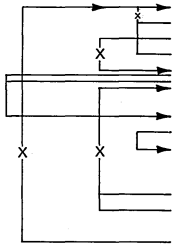

Hex	
0	No-op
1	Set mode
2	Monitor DSR on
3	Monitor RI/DSR on
4	Monitor phase, DSR check off
5	Monitor phase, DSR check on
6	
7	Receive in phase
8	Transmit initial
9	Transmit normal
A	Transmit with new sync
B	Unused
C	Transmit turn, request-to-send off
D	Transmit turn, request-to-send on
E	Unused
F	Disable

PCF Autocall Interface

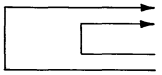

Hex	
0	No-op
4	Monitor call unit, ACR COS PND
5	Monitor call unit, ACR COS
8	Digit valid
F	Disable

SDF Autocall Interface

Bit	
24	Interrupt remember
25	Power indicator (PWI)
26	Call request (CRQ)
27	Data Line occupied (DLO)
28	Present next digit (PND)
29	Digit present (DPR)
30	Call originate status (COS)/Data set status (DSS)
31	Abandon call and retry (ACR)
32	Unused
33	Unused

ICW Field Definitions (Con't.)

PCF Synchronous Data Link Control Interface

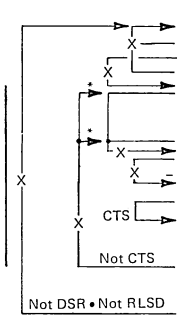

Hex	
0	NO-OP.
1	Set mode.
2	Monitor data set ready on.
3	Monitor ring indicator or data set ready on.
4	Monitor flag-block DSR error.
5	Monitor flag-allow DSR error.
6	Receive information-inhibit data interrupts.
7	Receive information-allow data interrupts.
8	Transmit initial.
9	Transmit normal.
A	Transmit normal with new sync.
B	Not used.
C	Transmit turnaround-request to send off.
D	Transmit end-request to send on.
E	Not used.
F	Disable.

X = Level 2 interrupt.

*EBCDIC or USASCII SYNC character received. (LCD=9 only).

**Tag nonflag character.

ICW Field Definitions (Con't.)

SDF Set Mode Line Interface

Bit	
24	Unused
25	Unused
26	Unused
27	Diagnostic wrap mode.
28	Set/reset data terminal ready.
29	Sync bit clock.
30	External clock.
31	Data rate select.
32	Oscillator select bit 1.
33	Oscillator select bit 2.

Flags

Bit	
*34-36	Ones counter (SDLC)
*37	Last line state (SDLC)
*38	Display request.
39-40	Reserved.
*41	Level 2 interrupt pending.
42	Priority 1.
43	Priority 2.
44	NRZI flag.
45-47	Parity

*These bits are reset to zero with power-on reset.

Type 3 Scanner

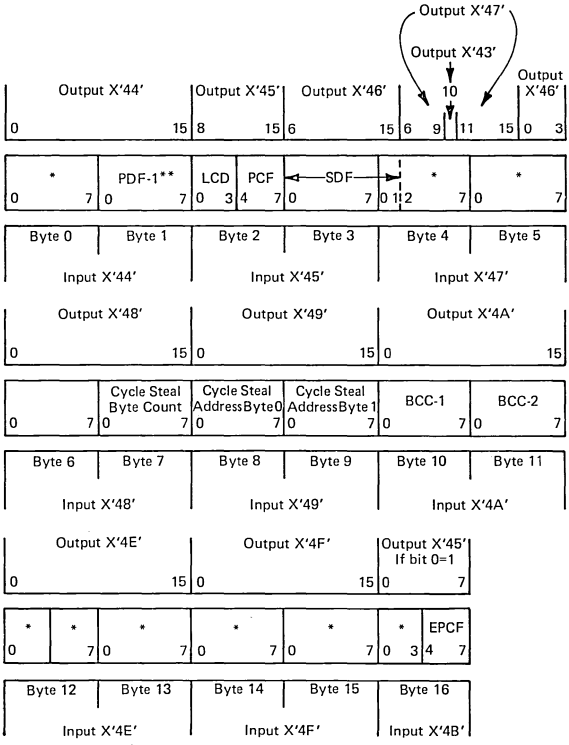

*See field definitions
**Part of PDF array

ICW Field Definitions

Byte 0
SCF (Secondary Control Field)

Bit	
0	Abort detect (SDLC)
1	Service request
2	Character overrun/underrun
3	Modem check
4	Not level 2 bid
5	End of message
6	Program flag
7	Trace

Byte 1
PDF-Dial

Bit	
4	Digit lead 8
5	Digit lead 4
6	Digit lead 2
7	Digit lead 1

Byte 2
LCD (Line Control Definer)

Hex	
0/8	Reserved
1/9	SDLC 8
2/A	Reserved
3/B	Dial
4/C	EBCDIC
5/D	USASCII
6/E	Reserved
7/F	Disable

PCF/EPCF (SDLC) - (Primary Control Field/Extended Primary Control Field)

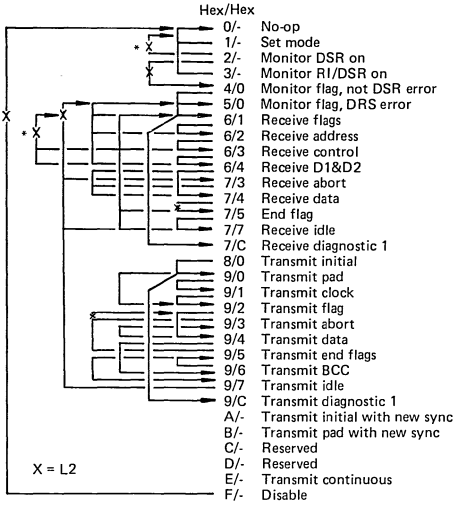

*Conditional interrupt

PCF/EPCF (BSC)

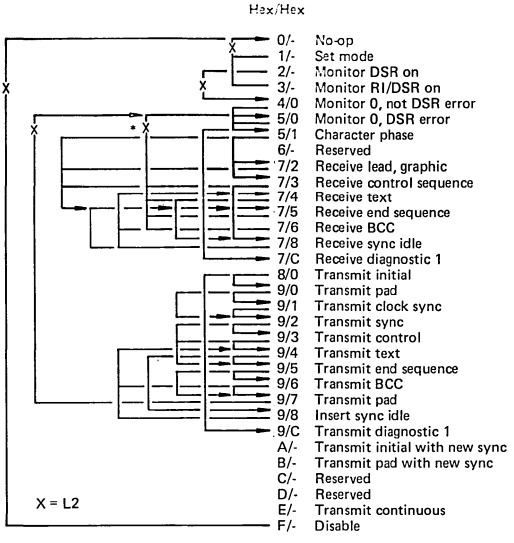

*Conditional interrupt

PCF-Dial

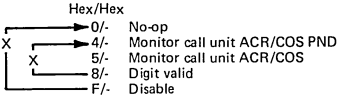

Byte 3-Byte 4
SDF Set Mode

Byte/Bit
3/0 NRZI control-Set ICW 5/4
3/1 Diagnostic 0-Set ICW 5/5
3/2 Diagnostic 1-Set ICW 5/6
3/3 Line address diagnostic wrap
3/4 Data terminal ready
3/5 Synchronous clock
3/6 External clock set-Set ICW 5/7
3/7 Data rate select
4/0 Oscillator select 1
4/1 Oscillator select 2

SDF Dial

Byte/Bit
3/0 Interrupt remember
3/1 Power indicator (PWI)
3/2 Call request (CRQ)
3/3 Data Line occupied (DLO)
3/4 Present next digit (PND)
3/5 Digit Present (DPR)
3/6 Call originate status (COS)
3/7 Abandon call and retry (ACR)

Byte 4 (continued)
Bit

2 Ones count-4
3 Ones count-2
4 Ones count-1
5 Last line state (SDLC)
Time-out control (BSC)
6 Display request
7 Ones count-8

Byte 5

Bit
0 Ones count-16
1 Level 2 interrupt pending
2 Priority bit 1
3 Priority bit 2
4 NRZI control (Set by SDF Set Mode)
5 Diagnostic 0 (Set by SDF Set Mode)
6 Diagnostic 1 (Set by SDF Set Mode)
7 External Clock (Set by SDF Set Mode)

Byte 6

Bit
0-3 Cycle steal address byte
4 ETB,ETX, or ENQ in data
5 Cycle steal valid
6 Data chain flag
7 Reserved

Byte 7 Cycle steal byte count

Byte 8 Cycle steal Address byte 0

Byte 9 Cycle steal address byte 1

Byte 10 Byte Count Character (BCC) 1

Byte 11 Byte Count Character (BCC) 2

Byte 12

Bit
0-3 Cycle steal-PDF array address
4-7 PDF-1 - array address

Byte 13

Bit	
0	Sequence 0
1	Sequence 1
2	RTS turn control
3	Sequence 2
4	Reserved
5	Reserved
6	Cycle steal message count field
7	Cycle steal message count field

Byte 14 (BSC)

Bit	
0	Received line signal detect
1	Format exception
2	Inhibit store of data in PDF-1
3	Data check
4	Bad pad flag
5	ACR expected
6	Leading DLE error
7	Length check

Byte 14 (SDLC)

Bit	
0	Received line signal detect
1	Idle detect
3	Data check
4	Flag off boundary
5	Reserved
6	Leading DLE error
7	Length check

Byte 15 (BSC)

Bit	
0-2	Initial status field
3-6	Final status field
7	Leading graphics

Byte 15 (SDLC)

Bit	
0	Control exception-received non-information frame
1	Reserved
2	Reserved
3	Program requested interrupt on line idle detect or flag
4	Reserved
5	After transmission, if no turn: 1=Transmit flag 0=Transmit idle
6	Transmit pad before line turn
7	Line turn after transmission

Byte 16

Bit	
0	New sync
1	Data terminal ready (Set by SDF Set Mode)
2	OLTT Diagnostic
4-7	Extended PCF

Section 12. NCP and PEP Abend and EP Hardstop Codes

When an error that causes an abend (abnormal termination) occurs, the supervisor's abend processor (CXAABND) posts an abend code in halfword direct addressable storage location X'760'. Locating the abend code in the dump gives some insight into the reason for the abnormal termination. The abend code appears in Display A on the panel if it is set to Function 6.

If the condition causing the abend is detected in level 1, the contents of external register X'74' (LAR) are stored at location X'7BC' and the contents of external register X'79' are stored at location X'6A8'. These two registers indicate the address of the failing instruction and the program level that was executing when level 1 was entered.

The first byte of the abend code indicates which portion of the NCP detected the error. The second byte indicates the specific error that was detected.

Errors Detected by I/O Initiation Request, SVC Decoding, or a Level 1 Interrupt Handling Routine (Byte 0 = X'00')

X'0001' An invalid SVC code was executed.

X'0002' A protection exception occurred.

X'0003' An XIO macro to a communication line specified an invalid QCB address.

X'0004' An XIO macro to the channel specified a BCU containing invalid chain pointers.

X'0005' An XIO macro to the channel specified a BCU containing too much text (more than can ever be transferred with a single host read operation).

X'0006' An XIO macro to the channel specified a BCU enqueued to a system queue.

X'0007' An XIO macro to the channel was used while a task was still waiting on the ECB in the first buffer of the BCU.

X'0008' An XIO macro to the channel specified a BCU in which at least one buffer had too large a text count field in the buffer prefix.

X'0009' An addressing exception occurred.

X'000A' An input/output instruction exception occurred, and retry was not possible.

X'000D' An instruction attempted to branch to storage location X'0000'.

X'000E' A program check occurred in level 1.

X'000F' An XIO macro to the link specified an invalid address. (NCP#).

X'0010' A level 3 channel adapter interrupt occurred while the channel adapter was active, but the command register (X'56') did not indicate a Read, Write, or Write Break command (type 2 CA only).

X'0011' A level 3 channel adapter interrupt for a host Write or Write Break occurred, and neither zero count override nor channel stop was indicated. One of these conditions should be present for every host Write operation.

X'0012' An initial selection sequence on a type 1 channel adapter was undefined.

X'0013' An outbound BTU had an invalid chain field.

X'0014' A data/status sequence on a type 1 channel adapter was undefined.

X'0015' An XIO to the channel specified a BCU address outside the buffer pool.

X'0016' An XPORT macro specified an invalid buffer address. (NCP#).

X'0017' A level 1 channel adapter error occurred with a type 1 CA (NCP1, 2).

A level 1 channel adapter error occurred and the channel save chain was active with a type 2 CA (NCP1, 2).

An unrecoverable level 1 channel adapter check has occurred in a type 2 or type 3 CA. (NCP#).

X'0018' Zero count override was detected on a host read operation.

X'0019' An initial IN CW did not have the zero count override flag set for channel I/O.

X'001A' The retry limit for an input or output instruction was exceeded.

X'001B' The program attempted to execute an invalid operation code.

X'001C' The program attempted to switch channel adapters via an XIO macro when the logic is not generated into the NCP.

X'001D' The program attempted to use an XIO macro for a busy communication line.

X'001E' More than one XIO macro was outstanding for the same BCU.

X'001F' An XIO macro to the channel specified an invalid BTU text count.

X'0020' The INCWAR in a type 2 channel adapter was incorrect (hardware error).

X'0021' The access method pad size is larger than the host buffer unit size.

X'0022' Outbound data pointers incorrect, program error. (NCP#).

X'0023' Invalid PIU address issued to channel. (NCP#).

X'0024' Out CW execution failure, hardware error. (NCP#).

X'0025' Level 3 is not in initial selection or data status for type 1/4 channel adapter.

X'0026' Attention delay PIU counter overflow or under flow.

X'0027' Attention presented with intermediate queue empty. (Program error).

X'0028' UIBLBBA is equal to zero. (Program error).

X'0029' Channel interface is disabled while the NCP is active.

X'002A' During initialization a level 3 was not pending on the channel adapter that is being loaded across.

X'002B' During initialization, a level 3 is pending on a channel adapter which SYSGENd inactive.

X'002C' During initialization, a channel adapter which has been SYSGENd inactive can not be interface disabled within a reasonable time. Manual intervention may be required.

EP Hardstop/PEP Abend Codes

X'0030' Scanner address exception. (EP only).

X'0031' L1 scanner ERP - Scanner error occurred during ERP.

X'0032' L1 scanner ERP - Unable to recover from CCU outbus check. Unable to locate the failing output X'4x' instruction.

X'0033' L1 CA ERP - Unable to select the failing channel adapter.

X'0034' L1 CA ERP - I/O exception check. (EP only).

X'0035' L1 CA ERP - Channel Adapter error occurred during ERP.

X'0036' L1 CA ERP - Unable to recover from CCU outbus check. Unable to locate the failing output X'6x' instruction.

X'0037' L1 CA ERP - CCU outbus check did not occur on L2 or L3.

X'0038' Initialization - CCU interrupt request detected.

X'0039' L1 CCU ERP - L5 issued an in or out instruction.

X'003A' Initialization - Adapter check detected.

X'003B' L1 CCU ERP - Unable to recover from inbus parity check. Unable to locate retry point for input X'6C'.

X'003C' L1 CA ERP - Unable to recover from CCU outbus check. Unable to locate retry point for output X'6C'.

X'003D' L1 ERP - L1 error rate threshold exceeded.

X'003E' L1 CCU ERP - Program check. (EP only).

X'003F' L1 ERP - Unable to determine interrupted level.

X'0040' L3 interrupt from PEP and CA not system generated.

Errors Detected by Task Management (Byte 0 = X'01')

X'0102' A TRIGGER macro specified an invalid QCB.

X'0104' A reentrant CALL macro specified a non-reentrant subroutine, or a level 5 task issued a reentrant CALL macro to code that is not a subroutine.

X'0105' A level 5 task used a non-reentrant CALL macro when either the calling task or the called subroutine was reentrant.

X'0107' A BHR attempted to use a QPOST macro.

X'0108' A SETIME macro specified an interval greater than 43,200 seconds.

X'0109' A BHR attempted to use the QPOST operand on a SYSXIT macro.

X'010C' A task attempted to use a SYSXIT macro while save area(s) were still allocated to its queue control block.

X'010D' A COPYPIU macro specified an RU count too high. (NCP#).

X'010E' A QPOST macro specified an invalid QCB address.

X'010F' A TPPOST macro specified a BCU with an invalid resource ID.

X'0111' A TPPOST macro specified an invalid BCU address (address low).

X'0112' A TPPOST macro specified an invalid BCU address (address high).

X'0113' A COPYPIU macro specified an invalid old buffer address (address low). (NCP3).

X'0114' A COPYBCU macro specified an invalid old buffer address.

X'0115' A COPYPIU macro specified an invalid new buffer address (address low). (NCP3).

X'0116' A COPYBCU macro specified an invalid new buffer address (address high).

X'0117' A task attempted to use an EXECBHR macro when the point 3 BHR queue was empty.

X'0118' A user BHR dequeued a BCU and failed to return it to the queue (via an INSERT macro) prior to the execution of an IBM BHR.

X'0119' A BHR attempted to use an EXECBHR macro.

X'0120' A dynamic save area pool was incorrectly structured.

X'0121' A SETIME macro specified an ECB address outside the buffer pool.

X'0122' A SETIME macro specified an invalid QCB address.

X'0129' A CHAP macro specified an invalid QCB address.

X'012D' A task attempted a reentrant return when no save area was currently allocated to the task.

X'0130' A POST macro specified an ECB whose status was already "event complete".

X'0131' A task attempted to change the dispatching priority of a waiting QCB to APPNDG.

Errors Detected by Queue Management (Byte 0 = X'02')

X'0201' An ENQUE macro specified an element that was already enqueued.

X'0202' An INSERT macro specified an element that was already enqueued.

X'0203' An EXTRACT macro specified the same address for the QCB and the positional element.

X'0204' Unassigned.

X'0205' An INSERT macro specified an element at the end of a queue.

X'0206' An INSERT macro specified the same address for the element to be inserted and the element after which it was to be inserted.

X'0207' An INSERT macro specified the same address for the element to be inserted and the QCB governing the queue.

X'0208' An ENQUEUE macro specified the same address for the element to be enqueued and the QCB governing the queue.

X'0209' A BHR attempted to use an ENQUE macro specifying an active queue control block.

X'0210' An ENQUE macro specified an element outside the buffer pool.

X'0211' An INSERT macro specified an element outside the buffer pool (positional element).

X'0212' An INSERT macro specified an element outside the buffer pool (insertion element).

X'0213' An EXTRACT macro specified an element outside the buffer pool (positional element).

X'0214' Unassigned.

X'0215' An ADVAN macro specified an element outside the buffer pool (positional element).

X'0216' A DEQUE macro specified an invalid QCB address.

X'0217' An ENQUE macro specified an invalid QCB address.

X'0218' A POINT macro specified an invalid QCB address.

X'0219' An INSERT macro specified an invalid QCB address.

X'021A' An INSERT macro specified the active QCB.

X'021B' An ENQUE macro attempted to enqueue the active QCB.

Errors Detected by Buffer Management (Byte 0 = X'03')

X'0301' A CHAIN macro specified a buffer that was already chained.

X'0302' A CHAIN macro specified the same address for the buffer to be chained and the buffer to which it was to be chained.

X'0304' A RELEASE macro specified a BCU containing more buffers than the system limit on buffers per BCU.

X'0306' A RELEASE macro specified a BCU enqueued to a system queue.

X'0307' The BCU specified in a RELEASE macro had a task still waiting on its event control block.

X'030A' A LEASE macro specified a buffer count too high.

X'030F' A RELEASE macro specified a buffer outside the buffer pool (buffer address low).

X'0310' A CHAIN macro specified a positional buffer outside the buffer pool.

X'0311' A CHAIN macro specified that a buffer outside the buffer pool be chained.

X'0312' An UNCHAIN macro specified a positional buffer outside the buffer pool.

X'0314' A SCAN macro specified a buffer outside the buffer pool (positional buffer address).

X'0315' A RELEASE macro specified a buffer outside the buffer pool (buffer address high).

X'0316' Initialization routines were unable to allocate buffers.

X'0318' A LEASE macro specified an ECB address outside the buffer pool.

X'0319' A LEASE macro specified a buffer count of 0.

X'0320' The buffer pool size and the buffer availability count were in conflict.

X'0321' Less than 20 buffers were formatted during initialization of the NCP.

Errors Detected by Supervisory Services (Byte 0 = X'04')

X'0401' A GETBYTE macro specified a BCU address outside the buffer pool.

X'0403' A PUTBYTE macro specified a BCU address outside the buffer pool.

X'0405' A GETBYTE macro specified a BCU with an incorrect text length.

X'0406' A PUTBYTE macro specified a BCU with an incorrect text offset (in one or more of the buffer prefix fields), or a PUTBYTE macro with the operand UPDATE = YES specified a BCU with an incorrect text length.

X'0407' A GETIME macro specified invalid options.

Hardware Related and Miscellaneous Errors (Bytes X'05', X'07', X'08')

X'0501' The retry limit for unresolved level 1 interrupts was exceeded.

X'0502' The retry limit for unresolved level 3 channel adapter interrupts was exceeded.

X'0503' A nonrecoverable channel adapter check occurred.

X'0504' A nonrecoverable communication scanner check occurred.

X'0505' A type 2 channel adapter cycle steal protection exception occurred.

X'0506' A type 2 channel adapter cycle steal addressing exception occurred.

X'0507' The retry limit for recoverable channel adapter checks was exceeded.

X'0508' The retry limit for recoverable communication scanner checks was exceeded.

X'050A' A channel adapter check could not be resolved.

X'050B' A communication scanner check could not be resolved.

X'050C' A program level 1 interrupt could not be resolved.

X'050D' A machine check or IPL request was not serviced by hardware.

X'050E' A program level 3 interrupt could not be resolved.

X'050F' A program level 4 timer interrupt request expired and the timer interval was not scheduled.

X'0510' NCP generation conflict—the NCP was not configured for the type of communication scanner installed.

X'0521' NCP generation conflict—program level 1 was not configured for the type of channel adapter installed.

X'0522' NCP generation conflict—an interrupt occurred from an inactive or undefined channel adapter. The channel adapter, if installed, should have been switched offline by the operator at the 3705 and should have remained disabled.

X'0523' Type 3 scanner addressing exception.

X'0524' Type 3 scanner storage protection exception.

X'0701' ANS initiated by the remote NCP.

X'0702' ANS initiated at the remote controller's panel.

X'0703' SIM received by the remote NCP.

X'0800' The link used by load program 2 was not defined at NCP generation.

Errors Detected in Level 5 (Byte 0 = X'10, X'30)

X'1001' A BCU with a Restart command contained an error in the text length field.

X'1002' The line control block (LCB) contained an invalid resource ID.

X'1003' The subtask sequence pointer in the LCB was not initialized.

X'1004' The BTU contained an invalid command modifier.

X'1005' After BHR execution, the device input queue was empty (point 1).

X'1006' After BHR execution, the line I/O queue was empty (point 2).

X'1007' After BHR execution, the point 3 BHR queue was empty.

X'1008' A task associated with the point 3 BHR queue was dispatched.

X'1009' The backspace BHR was dispatched, but the queue was empty.

X'100A' A data manipulation error occurred in the backspace BHR.

X'100B' The date/time BHR was dispatched, but the queue was empty.

X'100C' All 'skip' flags were set in the service order table (SOT).

X'100D' The number of dial digits passed from the host was not equal to the BTU text length.

X'100E' No Reset command was found at the end of an operation that was being reset.

X'100F' The device base (DVB) contained an invalid resource ID.

X'1010' An invalid system resource ID was specified in the BCU.

X'1011' An invalid checkpoint data length was specified in the BCU.

X'1012' The BH set pointer (DVIBHSET) in the DVB did not match any entry in the system BH set table (BST).

X'10EE' IOBPOLL points outside SOT.

X'10FF' Pending sessions count is negative.

X'3000' A task was dispatched with an empty QCB. (NCP#).

X'3001' Invalid UIB status in PIU. (NCP#).

X'3002' Invalid XIO return code. (NCP#).

X'3003' Invalid XPORT return code. (NCP#).

X'3004' Module CXDESSA entered when Deactivate Line halt is in progress. (NCP#).

X'3005' CXDCPSI unable to route PIU to SSCP. (NCP#).

X'3006' Reset Immediate XIO failed. (NCP#).

X'3007' Invalid PIU Format. (NCP#).

X'3008' Segmentation parameter N = zero. (NCP#).

X'3009' Segmentation parameters conflict. (NCP#).

X'300A' Run Terminator triggered with invalid status. (NCP#).

X'300B' Invalid Network Address in LKB. (NCP#).

X'300C' Invalid input passed to routine. (NCP#).

X'300D' LCB contains no PIU. (NCP#).

X'300E' CXDKFMR passed a request code to a routine which does not handle that request code. (NCP#).

X'300F' XIO Link failed on validated PIU. (NCP#).

X'3010' XPORT failed on validated PIU. (NCP#).

X'3011' XIO SETMODE failed. (NCP#).

X'3012' Invalid UIB type field. (NCP#).

X'3013' Invalid network address in CCU. (NCP#)

X'3014' Remote NCP received SNRM from local NCP. (NCP#).

X'3015' Remote NCP received DISC from local NCP. (NCP#).

X'3016' Remote detected permanent error in path to local and ANS is not in system. (NCP#).

X'3017' Inbound flow in SSCP-PU session of a type 1 PU.

X'3018' Begin bracket PIU not on queue.

SDLC/BSC Path Function Abend Codes

X'3019' A DEQUE macro was issued by SPF CPM-in and there was no error PIU on the APPL process QCB.

X'301A' An ADVAN macro was issued by SPF CPM-in and there was no error PIU on the APPL process QCB.

X'301B' An XPORT macro, issued by SPF CPM-in, failed for unknown reason.

X'301C' An XPORT macro, issued by SPF CPM-in, failed for an unknown reason during FID1-to-FID0 conversion.

X'301D' An XPORT macro, issued by SPF CPM-in, failed for an unknown reason during the export of a FID1 PIU.

X'301E' An XPORT macro was issued by an IBM point 3 BHR before the PIU was converted.

X'301F' A DEQUE macro was issued by SPF CPM-out and there was no error PIU on the APPL process QCB.

X'3020' An XPORT macro, issued by the build error module (CXDSERR), failed for an unknown reason.

X'3021' A POINT macro was issued by the build error module (CXDSERR) and there was no PIU on the APPL process QCB.

X'3025' Lines or links not quiesced count went negative.

X'3026' Auto network shutdown RVT scan error. (SNA)

X'3027' An undefined Contact Poll command was detected during SNA auto network shutdown.

X'3028' The remote NCP detected a condition on the active link to the local NCP which requires backup link monitoring. Although there are backup links to the local controller, there is no backup monitor code.

Load Program 2 (LPG2) Error Codes (conditions causing an unconditional hardstop).

X'30F0' No local/remote communication link defined as active in the remote ILP configuration data set (CDS).

X'30F1' Type 1 Scanner failed to enable, hardware error or CDS definition error.

X'30F2' CDS invalid.

Load Program 2 (LPG2) Abend Codes (conditions causing a conditional hardstop).

X'3F01' No local/remote communication link active (enable failed or transmit initial failed).

X'3F02' DISC (disconnect) received while monitoring one line. LPG2 re-IPLs to monitor all CDS lines.

X'3F03' SNRM (set normal response mode) received while monitoring one line and load final not yet received. LPG2 re-IPLs to monitor all lines.

X'3F04' Timer expiration. User-specified inactive interval has expired.

X'3F05' Level 1 error.

X'3F10' SIM (set initialization mode) received during the load or dump state.

Section 13: Line Character Codes

ASCII Character Code (even parity, 2848/2260)

PDF Code	S/360 S/370 Code	ASCII Line Code	ASCII Control Character	ASCII Graphics Character	PDF Code	S/360 S/370 Code	ASCII Line Code	ASCII Control Character	ASCII Graphics Character
03	03	60	ETX		81	01	C0	SOH	
06	2E	30	ACK		82	02	A0	STX	
0A	37	21	LF	(Note 1)	84	37	90	EOT	
18	18	0C	CAN		95	3D	D4	NAK	
21	18	42		(Note 2)	A0	40	82	SP	
22	18	22		(Note 3)	A3	7B	E2		#
24	5B	12		$	A5	6C	D2		%
27	7D	72		'	A6	50	B2		&
28	4D	0A		(	A9	5D	CA		)
2B	4E	6A		+	AA	5C	AA		*
2D	60	5A		-	AC	6B	9A		,
2E	4B	3A		.	AF	61	FA		/
30	F0	06		0	B1	F1	C6		1
33	F3	66		3	B2	F2	A6		2
35	F5	56		5	B4	F4	96		4
36	F6	36		6	B7	F7	F6		7
39	F9	4E		9	B8	F8	8E		8
3A	5E	2E		:	BB	5E	EE		;
3C	4C	1E		<	BD	7E	DE		=
3F	6F	7E		?	BE	6E	BE		>
41	C1	41		A	C3	83	E1		c
42	C2	21		B	C5	85	D1		e
44	C4	11		D	C6	86	B1		f
47	C7	71		G	C9	89	C9		i
48	C8	09		H	CA	91	A9		j
4B	D2	69		K	CC	93	99		l
4D	D4	59		M	CF	96	F9		o
4E	D5	39		N	D1	98	C5		q
50	D7	05		P	D2	99	A5		r
53	E2	65		S	D4	A3	95		t
55	E4	55		U	D7	A6	F5		w
56	E5	35		V	D8	A7	8D		x
59	E8	4D		Y	DD	A7	DD		(Note 4)
5A	E9	2D		Z	E1	81	C3		a
5F	6D	7D		@	E2	82	A3		b
60	7C	03		C	E4	84	93		d
63	C3	63		E	E7	87	F3		g
65	C5	56		F	E8	88	8B		h
66	C6	33		I	EB	92	EB		k
69	C9	4B		J	ED	94	DB		m
6A	D1	2B		L	EE	95	BB		n
6C	D3	1B		O	F0	97	87		p
6F	D6	7B		Q	F3	A2	E7		s
71	D8	47		R	F5	A4	D7		u
72	D9	27		T	F6	A5	B7		v
74	E3	17		W	F9	A8	CF		y
77	E6	77		X	FA	A9	AF		z
78	E7	0F		I	FC	5F	9F		¬
7E	4F	3F							

Notes:
1. Displayed on the 2260 as the New Line (▲) symbol. Causes a carriage return and line feed on the 1050 Model 4 Printer.
2. Displayed on the 2260 as the EOM (▬) symbol. Prints on the 1050 Model 4 Printer as the exclamation mark (!).
3. Displayed on the 2260 as the Check (■) symbol. Prints on the 1050 Model 4 Printer as the quote (").
4. Displayed on the 2260 as the Start MI (►) symbol. Prints on the 1050 Model 4 Printer as the cent sign (¢).

ASCII Character Code (odd parity)

PDF Code	S/360 S/370 Code	ASCII Line Code	ASCII Control Character	ASCII Graphics Character	PDF Code	S/360 S/370 Code	ASCII Line Code	ASCII Control Character	ASCII Graphics Character
00*	00	00*	NUL		3E	6E	3E		>
00*	17	(00)*	NUL		BF	6F	BF		?
01	01	01	SOH		40	7C	40		@
02	02	02	STX		C1	C1	C1		A
03*	03	03*	ETX		C2	C2	C2		B
04	37	04	EOT		43	C3	43		C
05*	2D	05*	ENQ		C4	C4	C4		D
86	2E	86	ACK		45	C5	45		E
07	2F	07	BEL		46	C6	46		F
08	16	08	BS		C7	C7	C7		G
89	05	89	HT		C8	C8	C8		H
8A	15	(8A)	LF		49	C9	49		I
8A	25	8A	LF		4A	D1	4A		J
0B	0B	0B	VT		CB	D2	CB		K
8C	0C	8C	FF		4C	D3	4C		L
0D	0D	0D	CR		CD	D4	CD		M
0E	0E	0E	SO		CE	D5	CE		N
8F	0F	8F	SI		4F	D6	4F		O
10	10	10	DLE		D0	D7	D0		P
91	11	91	DC1		51	D8	51		Q
92	12	92	DC2		52	D9	52		R
13	13	13	DC3		D3	E2	D3		S
94	3C	94	DC4		54	E3	54		T
15	3D	15	NAK		D5	E4	D5		U
16	32	16	SYN		D6	E5	D6		V
17*	26	17*	ETB		57	E6	57		W
98	18	98	CAN		58	E7	58		X
19	19	19	EM		D9	E8	D9		Y
1A	3F	1A	SUB		DA	E9	DA		Z
1A	CF	1A	SUB		5B	4A	5B		[
1A	E0	(1A)	SUB		DC	E1	DC		\
9B	27	9B	ESC		5D	5A	5D		]
1C	1C	1C	FS		5E	5F	5E		¬
9D	1D	9D	GS		DF	6D	DF		_
9E	1E	9E	RS		E0	79	E0		
1F	1F	1F	US		61	81	61		a
20	40	20	SP		62	82	62		b
A1	4F	A1		!	E3	83	E3		c
A2	7F	A2		"	64	84	64		d
23	7B	23		#	E5	85	E5		e
A4	5B	A4		$	E6	86	E6		f
25	6C	25		%	67	87	67		g
26	50	26		&	68	88	68		h
A7	7D	A7		'	E9	89	E9		i
A8	4D	A8		(	EA	91	EA		j
29	5D	29		)	6B	92	6B		k
2A	5C	2A		*	EC	93	EC		l
AB	4E	AB		+	6D	94	6D		m
2C	6B	2C		,	6E	95	6E		n
AD	60	AD		-	EF	96	EF		o
AE	4B	AE		.	70	97	70		p
2F	61	2F		/	F1	98	F1		q
B0	F0	B0		0	F2	99	F2		r
31	F1	31		1	73	A2	73		s
32	F2	32		2	F4	A3	F4		t
B3	F3	B3		3	75	A4	75		u
34	F4	34		4	76	A5	76		v
B5	F5	B5		5	F7	A6	F7		w
B6	F6	B6		6	F8	A7	F8		x
37	F7	37		7	79	A8	79		y
38	F8	38		8	7A	A9	7A		z
B9	F9	B9		9	FB	C0	FB		{
BA	7A	BA		:	7C	6A	7C		|
3B	5E	3B		;	FD	D0	FD		}
BC	4C	BC		<	FE	A1	FE		~
3D	7E	3D		=	7F	07	7F	DEL	

[ ] = In only.
( ) = Out only.

*Control characters without parity bit.

Baudot Character Code

PDF Code	S/360 S/370 Code	Baudot Line Code	Baudot Control Character	Baudot Graphics Character	PDF Code	S/360 S/370 Code	Baudot Line Code	Baudot Control Character	Baudot Graphics Character
01	C5	10		E	18	96	(03)		Q
01	85	(10)		E	18	D6	03		Q
02	15	08	LF		19	82	(13)		B
02	15	[88]	LF		19	C2	13		B
02	25	(08)	LF		1A	87	(0B)		G
03	81	(18)		A	1A	C7	0B		G
03	C1	18		A	1B	36	1B	FIGS	
04	40	04	SP		1C	94	(07)		M
05	A2	(14)		S	1C	D4	07		M
05	E2	14		S	1D	A7	(17)		X
06	89	(0C)		I	1D	E7	17		X
06	C9	0C		I	1E	A5	(0F)		V
07	A4	(1C)		U	1E	E5	0F		V
07	E4	1C		U	1F	06	1F	LTRS	
08	03	(02)	CR		1F	07	(1F)	LTRS	
08	0D	[82]	CR		1F	17	(1F)	LTRS	
08	26	(62)	CR		1F	32	(1F)	LTRS	
09	84	(12)		D	1F	37	(1F)	LTRS	
09	C4	12		D	1F	38	(1F)	LTRS	
0A	99	(0A)		R	81	F3	90		3
0A	D9	0A		R	83	60	98		-
0B	2F	9A	BELL		84	40	[84]	SP	
0B	79	94	BELL		85	7A	8E	,	1/8
0B	91	(1A)		J	86	F8	8C		8
0B	D1	1A		J	87	F7	9C		7
0C	95	(06)		N	89	5B	92		$
0C	D5	06		N	89	64	(8B)		$
0D	86	(16)		F	8A	F4	8A		4
0D	C6	16		F	8C	6B	86	[,	7/8
0E	83	(0E)		C	8F	4D	9E	(	1/2
0E	C3	0E		C	90	F5	81		5
0F	92	(1E)		K	91	7F	91		"
0F	D2	1E		K	92	5D	89	)	3/4
10	A3	(01)		T	93	5A	96	2	1/4
10	E3	01		T	93	F2	99		2
11	A9	(11)		Z	94	7B	85		#
11	E9	11		Z	95	F6	95		6
12	93	(09)		L	96	F0	8D		0
12	D3	09		L	97	F1	9D		1
13	A6	(19)		W	98	F9	83		9
13	E6	19		W	99	6F	93	?	5/8
14	88	(05)		H	9A	50	8B		&
14	C8	05		H	9B	36	[9B]	FIGS	
15	A8	(15)		Y	9C	4B	87	SP	
15	E8	15		Y	9D	3F	(97)	LTRS	
16	97	(0D)		P	9D	61	97		/
16	D7	0D		P	9D	E1	(97)		/
17	98	(1D)		Q	9E	5E	8F		3/8
17	D8	1D		Q	9F	06	[9F]	LTRS	

[ ] = In only.
( ) = Out only.

BCD Character Code 1

PDF Code	S/360 S/370 Code	BCD Line Code	BCD Control Character	BCD Graphics Character	PDF Code	S/360 S/370 Code	BCD Line Code	BCD Control Character	BCD Graphics Character
01	60	40	Ⓝ	-	79	97	4F		p
02	7C	20		@	7A	A7	2F		x
04	F8	10		8	7C	37	1F	EOT Ⓒ	
07	88	70		h	7F	07	[7F]	DEL	
08	F4	08		4	81	6D	C0	Ⓝ	-
0B	84	68		d	82	4A	A0		¢
0D	0F	(58)	RES		84	5C	90		*
0D	14	(58)	RES		87	C8	F0		H
0E	0E	(38)	BYP		88	3F	(88)		:
0E	24	38	BYP		88	7A	88		:
10	F2	04		2	8B	C4	E8		D
13	82	64		b	8D	14	[D8]	RES	
15	D0	54	MZ		8E	24	[B8]	BYP	
16	E0	34	RM	‡	90	5F	84		°
19	96	4C		o	93	C2	E4		B
1A	A6	2C		w	99	D6	CC		O
1C	36	1C	UC		9A	E6	AC		W
1F	06	7C	LC		9C	36	9C	UC	
20	F1	02		1	9F	06	[FC]	LC	
23	81	62		a	A0	7E	82		=
25	99	52		r	A3	C1	E2		A
26	A9	32		z	A5	D9	D2		R
29	95	4A		n	A6	E9	B2		Z
2A	A5	2A		v	A9	D5	CA		N
2C	35	[1A]	RS		AA	E5	AA		V
2F	05	7A	HT		AC	35	[9A]	RS	
31	93	46		l	AF	05	[FA]	HT	
32	A3	26		t	B1	D3	C6		L
34	02	16	EOA Ⓓ		B2	E3	A6		T
34	7B	16	EOA Ⓓ	#	B4	4F	96	EOA Ⓓ	
37	4B	76	Ⓨ	.	B7	4B	[F6]	Ⓨ	;
38	F7	0E		7	B8	7F	8E		"
3B	87	6E		g	BB	C7	EE		G
3D	17	5E	IL		BD	17	[DE]	IL	
3D	32	(5E)	IL		BE	27	[BE]	PRE	
3E	27	3E	PRE		C0	40	[81]	SP	
40	40	01	SP		C3	4E	E1		+
43	50	61		&	C5	D8	D1		Q
45	98	51		q	C6	E8	B1		Y
46	A8	31		y	C9	D4	C9		M
49	94	49		m	CA	E4	A9		U
4A	A4	29		u	CC	34	[99]	PN	
4C	34	19	PN		CF	04	[F9]	PF	
4F	04	79	PF		D1	D2	C5		K
51	92	45		k	D2	E2	A5		S
52	A2	25		s	D4	5D	95		)
54	F0	15		0	D8	7D	8D		'
57	C0	75	PZ		DB	C6	ED		F
58	F6	0D		6	DD	16	[DD]	BS	
5B	86	6D		f	DE	26	[BD]	EOB Ⓑ	
5D	16	5D	BS		E1	D1	C3		J
5E	03	[3D]	EOB Ⓑ		E2	6F	A3		?
5E	26	[3D]	EOB Ⓑ		E4	4D	93		(
61	91	43		j	E7	C9	F3		I
62	61	23		/	E8	C6	8B		%
64	F9	13		9	EB	C5	EB		E
67	89	73		i	ED	15	[DB]	LF-CR	
68	F5	0B		5	EE	25	[BB]	Attn	
6B	85	6B		e	F0	5E	87		;
6D	0D	(5B)	LF-CR		F3	C3	E7		C
6D	15	5B	LF-CR		F5	5A	D7		!
6E	25	3B	Index		F6	6B	[B7]	Ⓢ	'
70	F3	07		3	F9	D7	CF		P
73	83	67		c	FA	E7	AF		X
75	5B	57		$	FC	37	9F	EOT Ⓒ	
76	6B	37	Ⓢ	'	FF	07	[FF]	DEL	

[ ] = In only.
( ) = Out only.

BCD Character Code 2 (NCP ≠ Only)

PDF Code	S/360 S/370 Code	BCD Line Code	BCD Control Character	BCD Graphics Character	PDF Code	S/360 S/370 Code	BCD Line Code	BCD Control Character	BCD Graphics Character
01	60	40	Ⓝ	-	79	97	4F		p
02	7C	20		@	7A	A7	2F		x
04	F8	10		8	7C	37	:F	EOT Ⓒ	
07	88	70		h	7F	07	[7F]	DEL	
08	F4	08		4	81	6D	C0	Ⓝ	-
0B	84	68		d	82	4A	A0		¢
0D	0F	(58)	RES		84	5C	90		*
0D	14	(58)	RES		87	C8	F0		H
0E	0E	(38)	BYP		88	3F	(88)		:
0E	24	38	BYP		88	7A	88		:
10	F2	04		2	8B	C4	E8		D
13	82	64		b	8D	14	[D8]	RES	
15	D0	54	MZ		8E	24	[B8]	BYP	
16	E0	34	RM	‡	90	5F	84		°
19	96	4C		o	93	C2	E4		B
1A	A6	2C		w	99	D6	CC		O
1C	36	1C	UC		9A	E6	AC		W
1F	06	7C	LC		9C	36	9C	UC	
20	F1	02		1	9F	06	[FC]	LC	
23	81	62		a	A0	7E	82		=
25	99	52		r	A3	C1	E2		A
26	A9	32		z	A5	D9	D2		R
29	95	4A		n	A6	E9	B2		Z
2A	A5	2A		v	A9	D5	CA		N
2C	35	[1A]	RS		AA	E5	AA		V
2F	05	7A	HT		AC	35	[9A]	RS	
31	93	46		l	AF	05	[FA]	HT	
32	A3	26		t	B1	D3	C6		L
34	02	16	EOA Ⓑ		B2	E3	A6		T
34	7B	16	EOA Ⓑ	#	B4	4F	96	EOA Ⓓ	
37	4B	76	Ⓨ	.	B7	13	F6	Ⓨ	;
38	F7	0E		7	B8	7F	8E		,,
3B	87	6E		g	BB	C7	EE		G
3D	17	5E	IL		BD	17	[DE]	IL	
3D	32	(5E)	IL		BE	27	[BE]	PRE	
3E	27	3E	PRE		C0	40	[B1]	SP	
40	40	01	SP		C3	4E	E1		+
43	50	61		&	C5	D8	D1		Q
45	98	51		q	C6	E8	B1		Y
46	A8	31		y	C9	D4	C9		M
49	94	49		m	CA	E4	A9		U
4A	A4	29		u	CC	34	[99]	PN	
4C	34	19	PN		CF	04	[F9]	PF	
4F	04	79	PF		D1	D2	C5		K
51	92	45		k	D2	E2	A5		S
52	A2	25		s	D4	5D	95		)
54	F0	15		0	D8	7D	8D		'
57	C0	75	PZ		DB	C6	ED		F
58	F6	0D		6	DD	16	[DD]	BS	
5B	86	6D		f	DE	26	[BD]	EOB Ⓑ	
5D	16	5D	BS		E1	D1	C3		J
5E	03	[3D]	EOB Ⓑ		E2	6F	A3		?
5E	26	[3D]	EOB Ⓑ		E4	4D	93		(
61	91	43		j	E7	C9	F3		I
62	61	23		/	EB	C6	9B		%
64	F9	13		9	EB	C5	EB		E
67	89	73		i	ED	15	[DB]	LF-CR	
68	F5	0B		5	EE	25	[BB]	Attn	
6B	85	6B		e	F0	5E	87		;
6D	0D	(5B)	LF-CR		F3	C3	E7		C
6D	15	5B	LF-CR		F5	5A	D7		I
6E	25	3B	Index		F6	12	B7.	Ⓢ	'
70	F3	07		3	F9	D7	CF		P
73	83	67		c	FA	E7	AF		X
75	5B	57		$	FC	37	9F	EOT Ⓒ	
76	6B	37	Ⓢ	'	FF	07	[FF]	DEL	

[ ] = In only.
( ) = Out only.

Correspondence Character Code

PDF Code	S/360 S/370 Code	Correspondence Line Code	Correspondence Control Character	Correspondence Graphics Character	PDF Code	S/360 S/370 Code	Correspondence Line Code	Correspondence Control Character	Correspondence Graphics Character
01	5A	40	(N)	!	7C	37	1F	EOT (C)	
02	A3	20		t	7F	07	[7F]	LC	
04	F4	10		4	81	6E	C0	(N)	°
07	61	70		/	82	E3	A0		T
08	F5	08		5	84	5B	90		$
0B	97	68		P	88	6C	88		%
0D	14	58	RES		8B	D7	E8		P
0E	24	38	BYP		8E	24	[B8]	BYP	
10	F2	04		2	90	7C	84		@
13	7E	64		=	93	4E	E4		+
19	89	4C		i	99	C9	CC		I
1A	92	2C		k	9A	D2	AC		K
1C	36	1C	UC		9C	36	[9C]	UC	
1F	06	7C	LC		9F	06	[FC]	LC	
20	F1	02		1	A0	4F	82		[±
23	87	62		g	A3	C7	E2		G
25	A2	52		s	A5	E2	D2		S
26	88	32		h	A6	CB	B2		H
29	99	4A		r	A9	D9	CA		R
2A	84	2A		d	AA	C4	AA		D
2C	35	1A	RS		AF	05	[FA]	Tab	
2F	05	7A	Tab		B1	E5	C6		V
31	A5	46		v	B2	E4	A6		U
32	A4	26		u	B4	4D	96	EOA (D)	(
34	F9	16	EOA (D)	9	B7	6D	F6		–
37	60	76	(Y)	-	B8	5C	8E		•
38	F8	0E		8	BB	6B	[EE]		,
3B	6B	6E		,	BE	27	[BE]	PRE	
3D	17	5E	IL		C0	40	[81]	SP	
3D	32	(5E)	PRE		C3	D1	E1		J
3E	27	3E	PRE		C5	D6	D1		O
40	40	01	SP		C6	D3	B1		L
43	91	61		j	C9	7F	C9		"
45	96	51		o	CA	C5	A9		E
46	93	31		l	D1	4B	(C5]		.
49	7D	49		'	D2	D5	A5		N
4A	85	29		e	D4	E9	95		Z
4C	34	19	PN		D8	4C	8D		¢
4F	04	(79)	PF		DB	D8	ED		Q
51	4B	45		.	DD	16	[DD]	BS	
52	95	25		n	E1	D4	C3		M
54	A9	15		z	E4	5D	93		)
58	F6	0D		6	E2	E7	A3		X
5B	98	6D		q	E7	E8	F3		Y
5D	16	5D	BS		E8	50	8B		&
5E	26	[3D]	EOB (B)		EB	3F	(EB)	EOT (C)	
61	94	43		m	EB	79	EB		:
62	A7	23		x	ED	14	[DB]	RES	
64	F0	13		0	ED	15	[DB]	LF-CR	
67	A8	73		y	EE	25	[BB]	Attn	
68	F7	0B		7	F0	7A	87		#
6B	5E	6B		;	87	6F	F0		?
6D	0D	(5B)	LF-CR		F3	C6	E7		F
6D	15	5B	LF-CR		F5	E6	D7		W
6E	25	3B	Index		F6	C2	B7		B
70	F3	07		3	F9	C1	CF		A
73	86	67		f	FA	C3	AF		C
75	A6	57		w	FC	37	[9F]	EOT (C)	
76	82	37	(S)	b					
79	81	4F		a					
7A	83	2F		c					

[ ] = In only.
( ) = Out only.

Correspondence Character Code 2 (NCP # Only)

PDF Code	S/360 S/370 Code	Correspondence Line Code	Correspondence Control Character	Correspondence Graphics Character	PDF Code	S/360 S/370 Code	Correspondence Line Code	Correspondence Control Character	Correspondence Graphics Character
01	5A	40	(N)	!	7C	37	1F	EOT (C)	°
02	A3	20		t	7F	07	[7F]	LC	
04	F4	10		4	81	6E	C0	(N)	T
07	61	70		/	82	E3	A0		$
08	F5	08		5	84	5B	90		%
0B	97	68		P	88	6C	88		P
0D	14	58	RES		8B	D7	E8		
0E	24	38	BYP		8E	24	[B8]	BYP	·
10	F2	04		2	90	7C	84		@
13	7E	64		=	93	4E	E4		+
19	89	4C		i	99	C9	CC		I
1A	92	2C		k	9A	D2	AC		K
1C	36	1C	UC		9C	36	[9C]	UC	
1F	06	7C	LC		9F	06	[FC]	LC	
20	F1	02		1	A0	4F	82		[±
23	87	62		g	A3	C7	E2		G
25	A2	52		s	A5	E2	D2		S
26	88	32		h	A6	C8	B2		H
29	99	4A		r	A9	D9	CA		R
2A	84	2A		d	AA	C4	AA		D
2C	35	1A	RS		AF	05	[FA]	Tab	
2F	05	7A	Tab		B1	E5	C6		V
31	A5	46		v	B2	E4	A6		U
32	A4	26		u	B4	4D	96	EOA (D)	(
34	F9	16	EOA (D)	9	B7	6D	F6		–
37	60	76	(Y)	–	B8	5C	8E		*
38	F8	0E		8	BB	12	EE		,
3B	69	6E		,	BE	27	[BE]	PRE	
3D	17	5E	IL		C0	40	[81]	SP	
3D	32	(5E)	PRE		C3	D1	E1		J
3E	27	3E	PRE		C5	D6	D1		O
40	40	01	SP		C6	D3	B1		L
43	91	61		j	C9	7F	C9		"
45	98	51		o	CA	C5	A9		E
46	93	31		l	D1	13	C5		.
49	7D	49		'	D2	D5	A6		N
4A	85	29		e	D4	E9	95		Z
4C	34	19	PN		D8	4C	8D		¢
4F	04	(79)	PF		DB	D8	ED		Q
51	4B	45		.	DD	16	[DD]	BS	
52	95	25		n	E1	D4	C3		M
54	A9	15		z	E4	5D	93		)
58	F6	0D		6	E2	E7	A3		X
5B	98	6D		q	E7	E8	F3		Y
5D	16	5D	BS		E8	50	8B		&
5E	26	[3D]	EOB (B)		EB	3F	(EB)	EOT (C)	
61	94	43		m	EB	79	EB		:
62	A7	23		x	ED	14	[DB]	RES	
64	F0	13		0	ED	15	[DB]	LF-CR	
67	A8	73		y	EE	25	[BB]	Attn	
68	F7	0B		7	F0	7A	87		#
6B	5E	6B		;	87	6F	F0		?
6D	0D	(5B)	LF-CR		F3	C6	E7		F
6D	15	5B	LF-CR		F5	E6	D7		W
6E	25	3B	Index		F6	C2	B7		B
70	F3	07		3	F9	C1	CF		A
73	86	67		f	FA	C3	AF		C
75	A6	57		w	FC	37	[9F]	EOT (C)	
76	82	37	(S)	b					
79	81	4F		a					
7A	83	2F		c					

[ ] = In only.
( ) = Out only.

EBCD Character Code

PDF Code	S/360 S/370 Code	EBCD Line Code	EBCD Control Character	EBCD Graphics Character	PDF Code	S/360 S/370 Code	EBCD Line Code	EBCD Control Character	EBCD Graphics Character
01	60	40	Ⓝ	-	76	6B	37	Ⓢ	,
02	7C	20		,	79	97	4F		p
04	F8	10		8	7A	A7	2F		x
07	88	70		h	7C	37	1F	EOT Ⓒ	
08	F4	08		4	7F	07	[7F]	DEL	
0B	84	68		d	81	6D	C0	Ⓝ	
0D	0F	(58)	RES		82	4A	A0		¢̄
0D	14	58	RES		84	5C	90		*
0E	0E	(38)	BYP		87	C8	F0		H
0E	24	38	BYP		88	7A	88		:
10	F2	04		2	8B	C4	E8		D
13	82	64		b	8D	14	[D8]	RES	
15	D0	54	MZ		8E	24	[B8]	BYP	
16	E0	34	RM	‡	90	4C	84		<
19	96	4C		o	93	C2	E4		B
1A	A6	2C		w	99	D6	CC		O
1C	36	1C	UC		9A	E6	AC		W
1F	06	7C	LC		9C	36	[9C]	UC	
20	F1	02		1	9F	06	[FC]	LC	
23	81	62		a	A0	7E	83		=
25	99	52		r	A3	C1	E2		A
26	A9	32		z	A5	D9	D2		R
29	95	4A		n	A6	E9	B2		Z
2A	A5	2A		v	A9	D5	CA		N
2C	35	[1A]	RS		AA	E5	AA		V
2F	05	7A	HT		AC	35	[9A]	RS	
31	93	46		I	AF	05	[FA]	HT	
32	A3	26		t	B1	D3	C6		L
34	02	(16)	EOA Ⓓ	#	B2	E3	A6		T
34	7B	16	EOA Ⓓ	#	B4	7F	96	EOA Ⓓ	"
37	4B	76	Ⓨ	.	B7	5F	F6	Ⓨ	.
38	F7	0E		7	B8	6E	8E		>
3B	87	6E		g	BB	C7	EE		G
3D	00	(5E)	IL		BD	17	[DE]	IL	
3D	17	5E	IL		BE	27	[BE]	PRE	
3D	32	(5E)	IL		C0	40	[81]	SP	
3E	27	3E	PRE		C3	4E	E1		+
40	40	01	SP		C5	D8	D1		Q
43	50	61		&	C6	E8	B1		Y
45	98	51		q	C9	D4	C9		M
46	A8	31		y	CA	E4	A9		U
49	94	49		m	CC	34	[99]	PN	
4A	A4	29		u	CF	04	[49]	PF	
4C	34	[19]	PN		D1	D2	C5		K
4F	04	79	PF		D2	E2	A5		S
51	92	45		k	D4	5D	95		)
52	A2	25		s	D8	7D	8D		'
54	F0	15		0	DB	C6	ED		F
57	C0	75	PZ		DD	16	[DD]	BS	
58	F6	0D		6	DE	26	[BD]	EOB Ⓑ	
5B	86	6D		f	E1	D1	C3		J
5D	16	5D	BS		E2	6F	A3		?
5E	03	(3D)	EOB Ⓑ		E4	4D	93		(
5E	26	[3D]	EOB Ⓑ		E7	C9	F3		I
61	91	43		j	E8	6C	83		%
62	61	23		/	EB	C5	EB		E
64	F9	13		9	ED	15	[DB]	NL	
67	89	73		i	EE	25	[BB]	LF	
68	F5	0B		5	F0	5E	87		;
6B	85	6B		e	F3	C3	E7		C
6D	0D	(5B)	NL		F5	5A	D7		!
6D	15	5B	NL		F6	4F	B7	Ⓢ	!
6E	25	3B	LF		F9	D7	CF		P
70	F3	07		3	FA	E7	AF		X
73	83	67		c	FC	37	[9F]	EOT Ⓒ	
75	5B	57		$	FF	07	[FF]	DEL	
76	01	(37)	Ⓢ						

[ ] = In only.
( ) = Out only.

EBCDIC Character Code

PDF Code	S/360 S/370 Code	EBCDIC Line Code	EBCDIC Control Character	EBCDIC Graphics Character	PDF Code	S/360 S/370 Code	EBCDIC Line Code	EBCDIC Control Character	EBCDIC Graphics Character
00		00	NUL		7A		7A		:
01		01	SOH		7B		7B		#
02		02	STX		7C		7C		@
03		03	ETX		7D		7D		'
04		04	PF		7E		7E		=
05		05	HT		7F		7F		"
06		06	LC		81		81		a
07		07	DEL		82		82		b
0A		0A	SMM		83		83		c
0B		0B	VT		84		84		d
0C		0C	FF		85		85		e
0D		0D	CR		86		86		f
0E		0E	SO		87		87		g
0F		0F	SI		88		88		h
10		10	DLE		89		89		i
11		11	DC1		91		91		j
12		12	DC2		92		92		k
13		13	DC3		93		93		l
14		14	RES		94		94		m
15		15	NL		95		95		n
16		16	BS		96		96		o
17		17	IL		97		97		p
18		18	CAN		98		98		q
19		19	EM		99		99		r
1A		1A	CC		A2		A2		s
1C	S	1C	IFS		A3	S	A3		t
1D	A	1D	IGS		A4	A	A4		u
1E	M	1E	IRS		A5	M	A5		v
1F	E	1F	IUS (ITB)		A6	E	A6		w
20		20	DS		A7		A7		x
21	A	21	SOS		A8	A	A8		y
22	S	22	FS		A9	S	A9		z
24		24	BYP		C1		C1		A
25	P	25	LF		C2	P	C2		B
26	D	26	EOB/ETB		C3	D	C3		C
27	F	27	PRE/ESC		C4	F	C4		D
2A		2A	SM		C5		C5		E
2D	C	2D	ENQ		C6	C	C6		F
2F	O	2F	BEL		C7	O	C7		G
32	D	32	SYN		C8	D	C8		H
34	E	34	PN		C9	E	C9		I
35		35	RS		D1		D1		J
36		36	UC		D2		D2		K
37		37	EOT		D3		D3		L
3C		3C	DC4		D4		D4		M
3D		3D	NAK		D5		D5		N
3F		3F	SUB		D6		D6		O
40		40	SP		D7		D7		P
4A		4A		¢	D8		D8		Q
4B		4B		.	D9		D9		R
4C		4C		<	E2		E2		S
4D		4D		(	E3		E3		T
4E		4E		+	E4		E4		U
4F		4F		|	E5		E5		V
50		50		&	E6		E6		W
5A		5A		!	E7		E7		X
5B		5B		$	E8		E8		Y
5C		5C		*	E9		E9		Z
5D		5D		)	F0		F0		0
5E		5E		;	F1		F1		1
5F		5F		¬	F2		F2		2
60		60		-	F3		F3		3
61		61		/	F4		F4		4
6B		6B		,	F5		F5		5
6C		6C		%	F6		F6		6
6D		6D		_	F7		F7		7
6E		6E		>	F8		F8		8
6F		6F		?	F9		F9		9

ITA2 Character Code

PDF Code	S/360 S/370 Code	ITA2 Line Code	ITA2 Control Character	ITA2 Graphics Character	PDF Code	S/360 S/370 Code	ITA2 Line Code	ITA2 Control Character	ITA2 Graphics Character
01	85	(10)		E	18	96	(03)		O
01	C5	10		E	18	D6	03		O
02	25	08	LF		19	82	(13)		B
02	25	[88]	LF		19	C2	13		B
03	81	(18)		A	1A	87	(0B)		G
03	C1	18		A	1A	C7	0B		G
04	40	04	SP		1B	26	(1B)	FIGS	
04	40	[84]	SP		1B	36	1B	FIGS	
05	A2	(14)		S	1C	94	(07)		M
05	E2	14		S	1C	D4	07		M
06	89	(0C)		I	1D	A7	(17)		X
06	C9	0C		I	1D	E7	17		X
07	A4	(1C)		U	1E	A5	(0F)		V
07	E4	1C		U	1E	E5	0F		V
08	03	(02)	CR		1F	00	(1F)	LTRS	
08	0D	02	CR		1F	06	1F	LTRS	
08	0D	[82]	CR		1F	07	(1F)	LTRS	
08	15	(02)	CR		1F	17	(1F)	LTRS	
09	84	(12)		D	1F	32	(1F)	LTRS	
09	C4	12		D	1F	37	(1F)	LTRS	
0A	99	(0A)		R	1F	38	(1F)	LTRS	
0A	D9	0A		R	1F	3F	(1F)	LTRS	
0B	91	(1A)		J	81	F3	90		3
0B	D1	1A		J	83	60	98		-
0C	95	(06)		N	85	7D	94		'
0C	D5	06		N	86	F8	8C		8
0D	86	(16)		F	87	F7	9C		7
0D	C6	16		F	89	2D	92	WRU	
0E	83	(0E)		C	8A	F4	8A		4
0E	C3	0E		C	8B	2A	(1A)	BELL	
0F	92	(1E)		K	8B	2F	(9A)	BELL	
0F	D2	1E		K	8C	6B	86		,
10	A3	(01)		T	8E	7A	8E		:
10	E3	01		T	8F	4D	9E		(
11	A9	(11)		Z	90	F5	81		5
11	E9	11		Z	91	4E	91		+
12	93	(09)		L	92	5D	89		)
12	D3	09		L	93	F2	99		2
13	A6	(19)		W	95	F6	95		6
13	E6	19		W	96	F0	8D		0
14	88	(05)		H	97	F1	9D		1
14	C8	05		H	98	F9	83		9
15	A8	(15)		Y	99	6F	93		?
15	E8	15		Y	9B	36	[9B]	FIGS	
16	97	(0D)		P	9C	4B	(87)		.
16	D7	0D		P	9D	61	97		/
17	98	(1D)		Q	9E	7E	8F		=
17	D8	1D		Q	9F	06	[9F]	LTRS	

[ ] = In only.
( ) = Out only.

KATAKANA Character Code

PDF Code	S/360 S/370 Code	KATAKANA Line Code	KATAKANA Control Character	KATAKANA Graphics Character	PDF Code	S/360 S/370 Code	KATAKANA Line Code	KATAKANA Control Character	KATAKANA Graphics Character
01	A3	40		ホ	7A	8C	2F		ﾘ
02	BE	20		ﾍ	7C	37	1F	EOT	
04	AA	10		ﾕ	7F	07	7F	DEL	
07	88	70		ク	7F	DF	(7F)	PAD	
08	83	08		ｳ	81	60	C0		ｰ
0B	8D	68		シ	82	BF	A0		｡
0D	14	58	RES		84	F8	90		8
0E	24	38	BYP		87	C8	F0		H
10	9F	04		フ	88	F4	88		4
13	8A	64		コ	8B	C4	E8		D
19	AD	4C		ラ	8D	14	[D8]	RES	
1A	94	2C		テ	8E	24	[B8]	BYP	
1C	36	1C	UC		90	F2	84		2
1F	06	7C	LC		93	C2	E4		B
20	9B	02		ヌ	99	D6	CC		O
23	92	62		チ	9A	E6	AC		W
25	8E	52		ス	9C	36	[9C]	UC	
26	93	32		ツ	9F	06	[FC]	LC	
29	A5	4A		ミ	A0	F1	82		1
2A	9E	2A		ヒ	A3	C1	E2		A
2C	35	1A	RSTP		A5	D9	D2		R
2F	05	7A	HT		A6	E9	B2		Z
31	AE	46		リ	A9	D5	CA		N
32	86	26		カ	AA	E5	AA		V
34	89	16		ケ	AC	35	[9A]	RSTP	
37	AF	76		ル	AF	05	[FA]	HT	
38	A9	0E		ヤ	B1	D3	C6		L
3B	87	6E		キ	B2	E3	A6		T
3D	17	5E	IDLE		B4	BB	96		｢
3D	32	(5E)	IDLE		B7	4B	F6		.
3E	0B	(3E)	VT*		B8	F7	8E		7
3E	27	3E	PRE		BA	E7	AE		X
40	0B	(01)	VT*		BB	C7	EE		G
40	40	01	SP		BD	17	[DE]	IDLE	
43	A2	61		ヘ	BD	26	[BD]	EOB	
45	91	51		タ	BE	27	[BE]	PRE	
46	BD	31		ン	C0	40	[81]	SP	
49	A8	49		モ	C3	5C	E1		･
4A	96	29		ナ	C5	D8	D1		Q
4C	34	(19)	PN		C6	E8	B1		Y
4F	1A	(79)	PF		C9	D4	C9		M
51	9A	45		ノ	CA	E4	A9		U
52	95	25		ト	D1	D2	C5		K
54	BC	15		ワ	D2	E2	A5		S
58	85	0D		オ	D4	F0	95		0
5B	9D	6D		ハ	D8	F6	8D		6
5D	16	5D	BKSP		DB	C6	ED		F
5E	03	(3D)	EOB		DD	16	[DD]	BKSP	
5E	26	3D	EOB		E1	D1	C3		J
61	A4	43		マ	E2	5B	A3		¥
62	A7	23		メ	E4	F9	93		9
64	AC	13		ヨ	E7	C9	F3		I
67	97	73		ニ	E8	F5	8B		5
68	84	0B		エ	EB	C5	EB		E
6B	82	6B		イ	ED	15	[DB]	CR/LF	
6D	0D	(5B)	CR/LF		EE	25	[BB]	LF	
6D	15	5B	CR/LF		F0	F3	87		3
6E	25	3B	LF		F3	C3	E7		C
70	81	07		ア	F5	A6	D7		ﾑ
73	90	67		ソ	F6	6B	B7		,
75	BA	57		レ	F9	D7	CF		P
76	01	(37)	SOA		FC	37	[9F]	EOT	
76	99	37		ネ	FF	07	[FF]	DEL	
79	8F	4F		セ					

[ ] = In only. ( ) = Out only.
*Two character sequence.

Data Interchange (TWX) Character Code 1

PDF Code	S/360 S/370 Code	TWX Line Code	TWX Control Character	TWX Graphics Character	PDF Code	S/360 S/370 Code	TWX Line Code	TWX Control Character	TWX Graphics Character
80	36	(01)	NULL		C2	C2	43		B
80	38	(01)	NULL		C3	83	(C2)		C
84	24	(1C)	EOT		C3	C3	C2		C
84	37	[20]	EOT		C4	84	(23)		D
85	2D	A1	WRU		C4	C4	23		D
87	2F	E0	BELL		C5	85	(A2)		E
89	05	'91	HT		C5	C5	A2		E
8A	15	(51)	LF		C6	86	(62)		F
8A	25	51	LF		C6	C6	62		F
8B	0B	D1	VT		C7	87	(E3)		G
8C	0C	31	FF		C7	C7	E3		G
8D	03	(B1)	CR		C8	88	(13)		H
8D	0D	B1	CR		C8	C8	13		H
8D	26	(B1)	CR		C9	89	(92)		I
8E	0E	70	SO		C9	C9	92		I
8F	0F	F1	SI		CA	91	(52)		J
91	11	89	X-on		CA	D1	52		J
92	34	49	TP Aux On		CB	92	(D3)		K
94	04	29	TP Aux Off		CB	D2	D3		K
'13'	3C	C8	X-off		CC	93	(32)		L
A0	40	04	SP		CC	D3	32		L
A1	5A	85		!	CD	94	(B3)		M
A2	7F	44		"	CD	D4	B3		M
A3	7B	C4		#	CE	95	(73)		N
A4	5B	25		$	CE	D5	73		N
A5	6C	A4		%	CF	96	(F2)		O
A6	50	64		&	CF	D6	F2		O
A7	7D	E5		'	D0	97	(0B)		P
A8	4D	15		(	D0	D7	0B		P
A9	5D	94		)	D1	98	(8B)		Q
AA	5C	54		*	D1	D8	8B		Q
AB	4E	D5		+	D2	99	(4B)		R
AC	6B	34		,	D2	D9	4B		R
AD	60	B5		-	D3	A2	(CB)		S
AE	4B	75		.	D3	E2	CB		S
AF	61	F4		/	D4	A3	(2A)		T
AF	E1	[3A]		/	D4	E3	2A		T
B0	F0	0D		0	D5	A4	(AB)		U
B1	F1	8C		1	D5	E4	AB		U
B2	F2	4C		2	D6	A5	(6B)		V
B3	F3	CC		3	D6	E5	6B		V
B4	F4	2C		4	D7	A6	(EA)		W
B5	F5	AD		5	D7	E6	EA		W
B6	F6	6D		6	D8	A7	(1A)		X
B7	F7	EC		7	D8	E7	1A		X
B8	F8	1C		8	D9	A8	(9B)		Y
B9	F9	9D		9	D9	E8	9B		Y
BA	7A	5D		:	DA	A9	(5B)		Z
BB	5E	DC		;	DA	E9	5B		Z
BC	4C	3D		<	DB	79	DA		[
BD	7E	BD		=	DE	4F	7A		↑
BE	6E	7C		>	DF	6D	FB		←
BF	6F	FD		?	FC	49	BA		]
C0	7C	02		@	FF	00	(FE)	Rubout	
C1	81	(83)		A	FF	07	(FE)	Rubout	
C1	C1	83		A	FF	17	(FE)	Rubout	
C2	82	(43)		B	FF	32	(FE)	Rubout	

[ ] = In only.
( ) = Out only.

Data Interchange (TWX) Character Code 3 (NCP # Only)

PDF Code	S/360 S/370 Code	TWX Line Code	TWX Control Character	TWX Graphics Character	PDF Code	S/360 S/370 Code	TWX Line Code	TWX Control Character	TWX Graphics Character
80	36	(01)	NULL		C2	82	(43)		B
80	38	(01)	NULL		C2	C2	43		B
84	24	(1C)	EOT		C3	83	(C2)		C
84	37	[20]	EOT		C3	C3	C2		C
85	2D	A1	WRU		C4	84	(23)		D
87	2F	E0	BELL		C4	C4	23		D
89	05	91	HT		C5	85	(A2)		E
8A	15	(51)	LF		C5	C5	A2		E
8A	25	51	LF		C6	86	(62)		F
8B	0B	D1	VT		C6	C6	62		F
8C	0C	31	FF		C7	87	(E3)		G
8D	03	(B1)	CR		C7	C7	E3		G
8D	0D	(B1)	CR		C8	88	(13)		H
8D	0D	[B1]	CR/EOT		C8	C8	13		H
8D	26	(B1)	CR		C9	89	(92)		I
8E	0E	70	SO		C9	C9	92		I
8F	0F	F1	SI		CA	91	(52)		J
91	11	89	X-on		CA	D1	52		J
92	34	49	TP Aux On		CB	92	(D3)		K
94	04	29	TP Aux Off		CB	D2	D3		K
94	3C	CB	X-off		CC	93	(32)		L
98	18	[03]	CTLR X/ EOT		CC	D3	32		L
					CD	94	(B3)		M
A0	40	04	SP		CD	D4	B3		M
A1	5A	85		!	CE	95	(73)		N
A2	7F	44		"	CE	D5	73		N
A3	7B	C4		#	CF	96	(F2)		O
A4	5B	25		$	CF	D6	F2		O
A5	6C	A4		%	D0	97	(0B)		P
A6	50	64		&	D0	D7	0B		P
A7	7D	E5		'	D1	98	(8B)		Q
A8	4D	15		(	D1	D8	8B		Q
A9	5D	94		)	D2	99	(4B)		R
AA	5C	54		*	D2	D9	4B		R
AB	4E	D5		+	D3	A2	(CB)		S
AC	6B	34		,	D3	E2	CB		S
AD	60	B5		-	D4	A3	(2A)		T
AE	4B	75		.	D4	E3	2A		T
AF	61	F4		/	D5	A4	(AB)		U
AF	E1	[3A]		/	D5	E4	AB		U
B0	F0	0D		0	D6	A5	(6B)		V
B1	F1	8C		1	D6	E5	6B		V
B2	F2	4C		2	D7	A6	(EA)		W
B3	F3	CC		3	D7	E6	EA		W
B4	F4	2C		4	D8	A7	(1A)		X
B5	F5	AD		5	D8	E7	1A		X
B6	F6	6D		6	D9	A8	(9B)		Y
B7	F7	EC		7	D9	E8	9B		Y
B8	F8	1C		8	DA	A9	(5B)		Z
B9	F9	9D		9	DA	E9	5B		Z
BA	7A	5D		:	DB	79	DA		[
BB	5E	DC		;	DE	4F	7A		↑
BC	4C	3D		<	DF	16	[FB]		←
BD	7E	BD		=	DF	6D	(FB)		←
BE	6E	7C		>	FC	49	BA		]
BF	6F	FD		?	FF	00	(FE)	Rubout	
C0	7C	02		@	FF	07	(FE)	Rubout	
C1	81	(83)		A	FF	17	(FE)	Rubout	
C1	C1	83		A	FF	32	(FE)	Rubout	

[ ] = In only.
( ) = Out only.

ZSC3 Character Code

PDF Code	S/360 S/370 Code	ZSC3 Line Code	ZSC3 Control Character	ZSC3 Graphics Character	PDF Code	S/360 S/370 Code	ZSC3 Line Code	ZSC3 Control Character	ZSC3 Graphics Character
01	85	(10)		E	18	96	(03)		O
01	C5	10		E	18	D6	03		O
02	25	(08)	LF		19	82	(13)		B
02	25	[88]	LF		19	C2	13		B
02	37	(1F)	LF		1A	87	(0B)		G
03	81	(18)		A	1A	C7	0B		G
03	C1	18		A	1B	26	1B	FIGS	
04	40	04	SP		1B	36	1B	FIGS	
05	A2	(14)		S	1C	94	(07)		M
05	E2	14		S	1C	D4	07		M
06	89	(0C)		I	1D	A7	(17)		X
06	C9	0C		I	1D	E7	17		X
07	A4	(1C)		U	1E	A5	(0F)		V
07	E4	1C		U	1E	E5	0F		V
08	03	(02)	CR		1F	00	(1F)	LTRS	
08	0D	02	CR		1F	06	1F	LTRS	
08	0D	[82]	CR		1F	07	(1F)	LTRS	
08	15	(02)	CR		1F	17	(1F)	LTRS	
09	84	(12)		D	1F	32	(1F)	LTRS	
09	C4	12		D	1F	38	(1F)	LTRS	
0A	99	(0A)		R	1F	3F	(1F)	LTRS	
0A	D9	0A		R	81	60	90		-
0B	91	(1A)		J	83	4E	98		+
0B	D1	1A		J	84	40	[84]	SP	
0C	95	(06)		N	85	7D	94		'
0C	D5	06		N	86	2A	(86)	BELL	
0D	86	(16)		F	86	2F	8C	BELL	
0D	C6	16		F	87	F1	9C		1
0E	83	(0E)		C	89	2D	92	WRU	
0E	C3	0E		C	8A	61	8A		/
0F	92	(1E)		K	8B	F2	9A		2
0F	D2	1E		K	8C	6B	86		,
10	A3	(01)		T	8D	F4	96		4
10	E3	01		T	8E	F8	8E		8
11	A9	(11)		Z	8F	4D	9E		(
11	E9	11		Z	90	4B	81		.
12	93	(09)		L	92	5D	89		)
12	D3	09		L	93	F3	99		3
13	A6	(19)		W	94	6F	85		?
13	E6	19		W	95	F5	95		5
14	88	(05)		H	96	F9	8D		9
14	C8	05		H	98	7A	83		:
15	A8	(15)		Y	99	F6	93		6
15	E8	15		Y	9A	F0	8B		0
16	97	(0D)		P	9B	36	[9B]	FIGS	
16	D7	0D		P	9C	F7	87		7
17	98	(1D)		Q	9E	7E	8F		=
17	D8	1D		Q	9F	06	[9F]	LTRS	

[ ] = In only.
( ) = Out only.

1030

Polling

Controller 1030	
C →	Reset Terminals
B →	Terminal Address
← N	Negative Reply (Not Ready)
F →	Terminal Address
← D	Ready to send message
← TEXT	Message
← B	End of Block
Y →	Positive Message Received
C →	End of Transmission (Reset)

Addressing

Controller 1030	
C →	Reset Terminals
S →	Indicates message for a printer
B →	Terminal Address
1 →	Conditions 1031 to answer
← Y	Ready to receive
D →	End of Address (Text Mode)
TEXT →	Message (Data characters must be separated by three PAD characters. PAD characters keep line at Mark level).
B →	End of Block
← Y	Positive Message Received
C →	End of Transmission (Reset)

1050

Polling

Controller 1050	
C →	Reset Terminals
A →	Terminal Address
5 →	Component Select Code for Keyboard
← N	Negative Reply
C →	Reset, Resume Polling or Addressing
B →	Terminal Address
6 →	Component Select Code for Reader 1
← D	Reader Ready to start message
← TEXT	Message
← B	End of Block
← LRC	Check Character Generated by the 1050
Y →	Positive Message Received (No data check).
← C	End of Transmission

Addressing

Controller 1050	
C →	Reset Terminals
A →	Terminal Address
1 →	Component Select Code for Printer 1
← Y	Terminal ready to receive
D →	End of Address
TEXT →	Message
B →	End of Block
LRC →	Check Character Generated by the controller
← N	Negative Message Received (detected a data check).
TEXT →	Message Repeated (Program Controlled)
B →	End of Block
LRC →	Check Character Generated by the controller
← Y	Positive Message Received (No data check).
C →	End of Transmission (Reset)

2740

Polling**

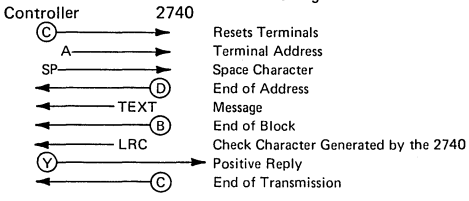

Addressing**

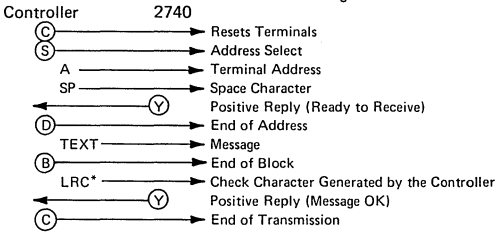

*Used only on 2740 equipped with VRC/LRC checking feature.
**Assumes 2740, Station Control, and Record Checking.

2741 Transmit/Receive Sequence

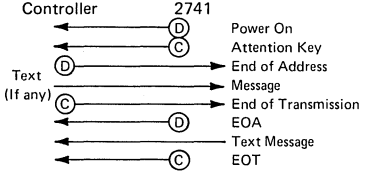

Telegraph Terminals

Polling

Controller		TTY	
AT&T 83B2/B3	Figs, H, Ltrs →		EOM/EOT
	A, M →		Terminal Address; second character must be M or G.
	←	V or M	Negative Reply
	C, M →		Terminal Address
	←	Text	Message Sent
	←	Figs, H, Ltrs	EOM/EOT
WU 115A	Figs, H, Ltrs →		EOM/EOT
	X, A →		First character must be an X, followed by the terminal address.
	←	V or M	Negative Reply
	C, M →		Terminal Address
	←	Text	Message Sent
	←	Figs, H, Ltrs	EOM/EOT

*T, O, M, V, H, or Y cannot be used when addressing the AT&T 83B2/B3.

Addressing

Controller		TTY	
*AT&T 83B2/B3	Figs, H, Ltrs →		EOM/EOT
	A, B, Ltrs →		Terminal Address (Ltrs must be included when addressing an AT&T 83B3)
	←	V or M	Positive Reply (Ready to Receive)
	CR, LF, Ltrs →		EOA
WU 115A	Figs, H, Ltrs →		EOM/EOT
	A, B →		Circuit, terminal Address
	←	V or M	Positive Reply
	Space, CR, LF →		EOA
	Text →		Message Sent
	Figs, H, Ltrs →		EOM/EOT

Models 33 and 35 Teletypewriters
(Assume point-to-point, dial-up (switched network))

Keyboard Unattended

Controller		TTY	
Dial TTY	→		Controller dials TTY to perform WRU function.
	←	ID,ACK	TTY gives identification code and go-ahead signal. (Always 20 characters.)
Text	→		Message sent.
XOFF*,WRU	→		Go-ahead signal to TTY.
	←	ID,ACK	TTY identification and go-ahead
Text	→		Message sent.
XOFF*,EOT	→		Transmission is finished: go on-hook.

Keyboard Attended

Controller		TTY	
Dial TTY	→		Controller dials TTY to perform WRU function.
	←	ID,ACK	Identification code and go-ahead signal. (Always 20 characters.)
Text	→		Message sent.
XOFF*	→		End of text.

Paper Tape

	Controller		Tape	
Paper-tape Punch	Dial Tape	→		Controller dials tape terminal.
		←	ID,ACK	Terminal identification and go-ahead to controller.
	Text	→		Message sent.
	XOFF*,EOT	→		End of text, end of transmission.
Paper-tape Reader	Dial Tape	→		Controller dials tape terminal.
		←	ID,ACK	Terminal identification and go-ahead to controller.
	XON	→		Turns on tape transmitter.
		←	Text	Message sent.
		←	XOFF*	End of text.
	XOFF*,EOT	→		End of text, end of transmission.

*May be followed by a maximum of three delete characters.

BSC Terminals

Polling

Controller		Terminal	
EOT	→		Controller resets terminals.
Polling characters, ENQ	→		Controller sends polling characters, then turns the line around.
	←	Text	Terminal sends message.

Addressing

Controller		Terminal	
EOT	→		Controller resets terminals.
Addressing characters, ENQ	→		Controller addresses the terminal, then turns the line around.
	←	ACK0	Terminal ready to receive.
Text	→		Controller sends message.

Section 15: MDR Record Formats

The network control program (NCP) and the host access method provide records as input to the Miscellaneous Data Recorder (MDR).

The access method recognizes NCP1 and NCP2 MDR records by the system response (X'0A') in the BTU.

NCP# MDR records are identified by the second two bytes of the request/response unit (RU) in the FID1 PIU. For MDR records, RU byte 1 = X'03' and RU byte 2 = X'81'. Bytes 3 and 4 of the RU contain the network address of the failing unit, and byte 5 is the beginning of the MDR record.

The text portion of the MDR records consists of a field of up to 35 bytes. The third byte of the field is the recording mode byte, which is used to differentiate among the types of NCP MDR records. The fourth byte, the record ID byte, is always set to X'05', indicating to the host that this is a 3704 or 3705 MDR record.

In some of the records there is a field labeled Abend/Malfunction Code. If the record represents an error that caused the NCP to abend, this field contains the appropriate abend code. In this instance the MDR record never reaches the host, but remains in the check record pool (CRP). If, however, the error condition was one that might have caused an abend but was recovered from, the record is transferred to the host, and the abend code is treated as a malfunction code. When the error condition is one that could not cause an abend, this field is set to zero.

When the MDR record is in the CRP, two CRP control bytes precede each record. Refer to the data area layout for more information about the CRP.

The records for permanent line errors and line statistics are created by the line error recorder routine (CXDILER).

Record Format for Permanent Line Errors

				0(0) Line Interface Address	2(2) Recording *** Mode=X'00'	3(3) Record ID=X'05'
4(4) BTU Command (BCHCMD)*	5(5) BTU Modifier (BCHMOD)*	6(6) BTU Flags (BCHSFLAG)*		8(8) IOB Command (IOBCMAND)*	9(9) IOB Modifiers (IOBCMODS)*	11(B) IOB Immediate Control Command (IOBIMCTL)*
12(C) IOB Status (IOBSTAT)*		14(E) IOB Extended Status (IOBEXTST)*	15(F) IOB Initial Error Status (IOBERST)*		17(11) IOB Initial Error Extended Status (IOBEREST)*	18(12) I/O Counter (DVBSDRT)*
20(14) Temporary Error Counter (DVBSDRE)*	21(15) 2740 Graphic Response Byte**	22(16) Device Features (DVBFEAT1)*	(DVBFEAT2)*	24(18) Device Type (DVBTYPE)*		

*Indicates the control block field from which this MDR record field is loaded. (See "Data Area Layouts" section for field definitions.)

**2740 graphic response byte is zeroed if not applicable.

***Applies to BSC/SS devices as well as lines.

Record Format for Station Statistics

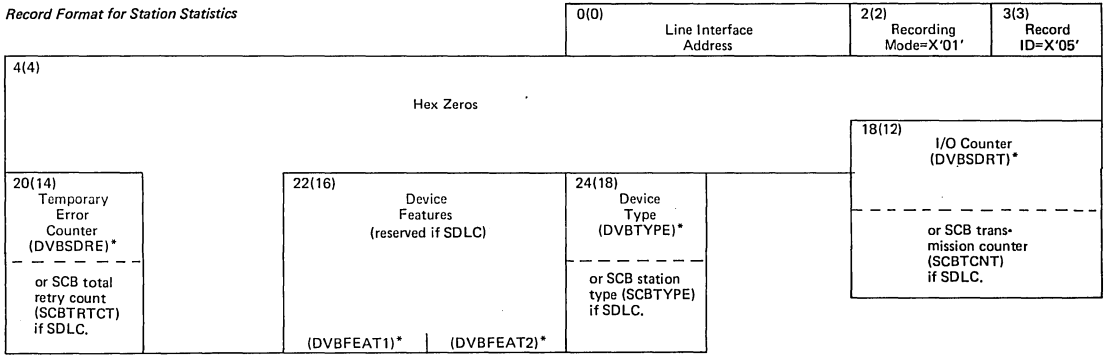

*Indicates the control block field from which the MDR record field is loaded. (See "Data Area Layouts" section for field definitions).

The records on this and the following pages are created by level 1 error processing routines. They are prepared for transfer to the host by the error record transfer routine (CXDIERT).

Record Format for Type 1 Channel Adapter Errors

			0(0) Abend/Malfunction Code	2(2) Recording Mode=X'10'	3(3) Record ID=X'05'
4(4) Error Record Type=X'84' (Type 1 CA)	5(5) Lost Check Record Count (CRPLCRCT)	6(6) Hex Zeros			
			16(10) External Register X'67' Type 1 CA Controls		

Record Format for Type 2 Channel Adapter Errors

			0(0) Abend/Malfunction Code	2(2) Recording Mode=X'10'	3(3) Record ID=X'05'
4(4) Error Record Type*	5(5) Lost Check Record Count (CRPLCRCT)	6(6) External Register X'50' INCWAR	8(8) External Register X'51' OUTCWAR	10(A) External Register X'52' Control Word Byte Count	
12(C) External Register X'55' Control Register		14(E) External Register X'56' Check Register	16(10) External Register X'58' Bus Out Diagnostic Register	18(12) External Register X'59' Cycle Steal Address Register**	
20(14) Hex Zeros		22(16) External Register X'5C' Command Register			

*Type 2 CA 1=X'04'
Type 2 CA 2=X'02'
**With a 3705 over 64K, the first two bits of the address are the low-order two bits of the previous field.

Record Format for Type 1 Communication Scanner Errors

			0(0) Abend/Malfunction Code	2(2) Recording Mode=X'11'	3(3) Record ID=X'05'
4(4) Error Record Type = X'C0' (Type 1 Scanner)	5(5) Lost Check Record Count (CRPLCRCT)	6(6) External Register X'44' Status Register	8(8) External Register X'74' Lagging Address Register		
12(C) Interrupted Program Level's Instruction Address Register (Register 0)			16(10) External Register X'79' Program Level Interrupted		

Record Format for Type 2 Communication Scanner Errors

			0(0) Abend/Malfunction Code	2(2) Recording Mode=X'11'	3(3) Record ID=X'05'
4(4) Error Record Type*	5(5) Lost Check Record Count (CRPLCRCT)	6(6) External Register X'43' Check Register 1	8(8) External Register X'74' Lagging Address Register		
12(C) Interrupted Program Level's Instruction Address Register (Register 0)			16(10) External Register X'79' Program Level Interrupted		

*Type 2 Scanner-1=X'40'
Type 2 Scanner-2=X'20'
Type 2 Scanner-3=X'10'
Type 2 Scanner-4=X'08'

Record Format for Type 3 Communication Scanner Errors

			0(0) Abend/Malfunction Code	2(2) Recording Mode=X'11'	3(3) Record ID=X'05'
4(4) Error Record Type*	5(5) Lost Check Record Count (CRPLCRCT)	6(6) External Register X'43' Check Register 1	8(8) External Register X'74' Lagging Address Register		
12(C) Interrupted Program Level's Instruction Address Register (Register 0)			16(10) External Register X'79' Program Level Interrupted	18(12) External Register X'42' Check Register 0	

*Type 3 Scanner-1=X'41'
Type 3 Scanner-2=X'21'
Type 3 Scanner-3=X'11'
Type 3 Scanner-4=X'09'

Record Format for Input/Output Instruction Exceptions

			0(0) Abend/Malfunction Code	2(2) Recording Mode=X'12'	3(3) Record ID=X'05'
4(4) Error Record Type=X'20'	5(5) Lost Check Record Count (CRPLCRCT)	6(6) Instruction on which the error occurred.	8(8) External Register X'74' Lagging Address Register		
12(C) Interrupted Program Level's Instruction Address Register (Register 0)			16(10) External Register X'79' Program Level Interrupted		

Record Format for Unresolved Program Level 1 Interrupt Requests (Type 2/3 scanner)

			0(0) Abend/Malfunction Code	2(2) Recording Mode=X'13'	3(3) Record ID=X'05'
4(4) Error Record Type=*	5(5) Lost Check Record Count (CRPLCRCT)	6(6) External Register X'76' Adapter Interrupt Requests Group 1	8(8) External Register X'74' Lagging Address Register		
12(C) Interrupted Program Level's Instruction Address Register (Register 0)			16(10) External Register X'79' Program Level Interrupted	18(12) External Register X'7E' CCU Interrupt Requests Group 1	

*Type 2 scanner=X'01'
Type 3 scanner=X'03'

Record Format for Invalid Instruction Operation Codes

			0(0) Abend/Malfunction Code	2(2) Recording Mode=X'12'	3(3) Record ID=X'05'
4(4) Error Record Type=X'08'	5(5) Lost Check Record Count (CRPLCRCT)	6(6) Instruction on which error occurred.	8(8) External Register X'74' Lagging Address Register		
12(C) Interrupted Program Level's Instruction Address Register (Register 0)			16(10) External Register X'79' Program Level Interrupted		

Record Format for Unresolved Program Level 3 Interrupt Requests
This record is created by the level 3 router (CXCCRTR).

			0(0) Abend/Malfunction Code	2(2) Recording Mode=X'13'	3(3) Record ID=X'05'
4(4) Error Record Type=X'03'	5(5) Lost Check Record Count (CRPLCRCT)	6(6) External Register X'77' Adapter Interrupt Requests Group 2	8(8)		
Hex Zeros				18(12) External Register X'7F' CCU Interrupt Requests Group 2	

Record Format for Permanent SDLC Errors

				0(0) Line interface address		2(2) Recording mode. X'03'=Station error X'02'=Link error	3(3) Record ID. X'05'
4(4) * SCB Link scheduling flag. (SCBSSCF)		6(6) * Output control flag. (SCBOCF)	7(7) Reserved	8(8) LXB command. (LXBCMAND)	9(9) LXB modifiers (LXBCMODS)		11(B) LXB Immediate control cmd. (LXBIMCTL)
12(C) LXB status. (LXBSTAT) LXBSTAT	LXBSTATC	14(E) LXB extended status. (LXBEXTST)	15(F) LXB error status. (LXBERST) LXBERST	LXBHSTAT	17(11) LXB initial error extended status. (LXBEREST)	18(12) * SCB transmission counter. (SCBTCNT)	
20(14) * SCB Total retry count. (SCBTRTCT)	21(15) Received BLU command field. (LXBRBLUC)	22(16) Reserved.		24(18) * SCB station type. (SCBTYPE)	25(19) ** Transmit BLU command field (CCBCFLD)	26(1A) * SCB current outstanding count. (SCBCOC)	27(1B) * SCP pass count. (SCBPCNT)
28(1C) * SCB receive count. (SCBNR) (Bits 4,5,6)	29(ID) * SCB send count. (SCBNS) (Bits 4,5,6)	30(1E) CCB control and type flags. (CCBCTL)		32(20) *** Command field received from secondary station. SECCFR	33(21) *** N(R) and N(S) received from secondary station.	34(22) *** Command reject reason: X'08'=Invalid N(R). X'04'=Frame too long. X'02'=Data received in S or NS format. X'01'=Invalid command.	

*This field is present only if this record is for a station (for a link, field contains all zeros).
**This field stored only for duplex links.
***This field stored only if Command Reject was the cause of the MDR record being formatted.

Section 16. EP Storage Maps

EP (old base)

Address (hex)	Description
000-500	Destroyed by dump.
680	Direct addressables for IC and STC instructions.
68B	ID for CYANUC module.
6F0	Pseudo BCB. (Type 1 scanner only)
6F6	Character service routine address. (Type 1 scanner only)
700	Direct addressables for LH and STH instructions.
700	Pointer to channel vector table. (The contents of this location are destroyed if a dump is taken on a 3705 with dual ROS.
702	IPL register save area.
710	Queue control flags: X'40' – Stacked status service. X'20' – Sense service. X'10' – TIO sequence. X'08' – Do not dequeue TIO.
711	Active command count. (Equals the number of lines active.)
712	QCB table. (Address of last CCB using TIO.)
714	Priority-data-service-out queue (PDSOQ).
718	Data-service-out queue (DSOQ).
71C	Data-service-in queue (DSIQ).
720	Status-out queue (SOQ).
724	Sense-out queue (SNOQ).
728	Stacked-status queue (SSQ).
72C	Address pointer to the first character serviced (CSPQ1).
72E	Address pointer to last character serviced (CSPQ2).
730	SVC0
780	Group 0 register save area for ROS.
780	Direct addressables for L and ST instructions.
7A0	Group 0 register save area for level 1.
7DC	Pointer to last entry in error log.
7E0	Error log.
800	Line vector table (Type 1 scanner)
840	Line vector table. (Type 2 scanner)
---	Channel vector table. (Begins on the first doubleword boundary following the line vector table.)
---	Character control block. (Begins on the first doubleword boundary following the channel vector table).
---	Line Group Table. (Begins on the first doubleword boundary following the last character control block.)
---	Trace table pointers. (Immediately follows the EP load module.)
---	Trace table. (Immediately follows the trace table pointers.)

EP (new base)

Address (hex)	Description
000-500	Destroyed by dump.
680	Direct addressables for IC and STC instructions.
68B	ID for CYANUC module.
697	Channel adapter select flag of IPL channel.
698	Level 1 ERP count.
69A	Module ID (CYENUC).
6A2	Version and modification level.
6F0	Pseudo BCB.
6F6	Character service routine address. (Type 1 scanner only).
700	Direct addressables for LH and STH instructions.
700	Pointer to channel vector table. (The contents of this location are destroyed if a dump is taken on a 3705 with dual ROS.
702	IPL register save area.
710	Pointer to CHCB for the first channel adapter 4.
712	Pointer to CHCB for the second channel adapter 4.
718	Pointer to the next CHVT to be checked by the timer routine.
71A	Address of the CHCB initialized for panel use.
71C	Address of the error log.
71E	Contents of ABAR when a level 1 interrupt occurs.
720	Contents of Input X'79' when a level 1 interrupt occurs. (Indicates an interrupted level.)
722	Contents of Input X'76' when a level 1 interrupt occurs. (Indicates an adapter request.)
724	Log-trace indicator: X'01' = Store log entry at byte displacements 6 and 7 of the trace entry.
726	Unhang subchannel switch: X'01' = Action is in progress to unhang the subchannels.
72C	Address pointer to the first character serviced (CSPQ1).
72E	Address pointer to last character serviced (CSPQ2).
730	SVC0
780	Group 0 register save area for ROS.
780	Direct addressables for L and ST instructions.
7A0	Group 0 register save area for level 1.
840	Line vector table (Type 2 scanner).
---	Channel Control Block (CHCB). (Begins on the first doubleword boundary following the line vector table.)
---	Character control block. (Begins on the first doubleword boundary following the channel vector table).
---	Line Group Table. (Begins on the first doublewrod boundary following the last character control block.)
---	Trace table pointers. (Immediately follows the EP load module.)
---	Trace table. (Immediately follows the trace table pointers.)

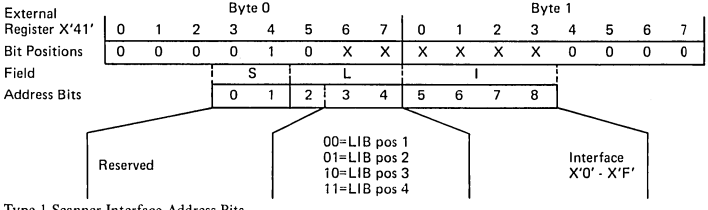

Type 1 Scanner Interface Address Bits

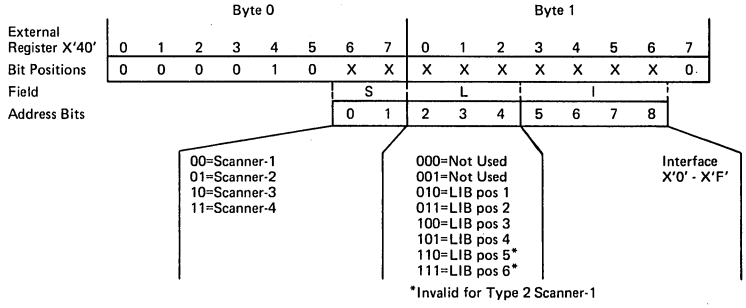

Note: Interface addressing in the 3704 with a Type 2 Scanner follows the same addressing scheme as a 3705 Type 2 Scanner-1, LIB position 1. Interface address bits 4, 5, 6, 7, and 8 specify lines 0-F in LIB Type A1. However, addresses 1, 3, C, D, E, and F are reserved. If the scanner supports two LIBs (LIB positions 1 and 2), all interface addresses are used.

Type 2 Scanner Interface Address Bits

		S/L (HEX) ↓	I →	INTERFACE ADDRESS ASSIGNMENTS (HEX) 0	1	2	3	4	5	6	7	8	9	A	B	C	D	E	F
				STORAGE ADDRESSES (HEX)**															
Type 1 Scanner	LIB position 1	00	–	800	810	820	830	840	850	860	870	880	890	8A0	8B0	8C0	8D0	8E0	8F0
	2	01	–	900	910	920	930	940	950	960	970	980	990	9A0	9B0	9C0	9D0	9E0	9F0
	3	02	–	A00	A10	A20	A30	A40	A50	A60	A70	A80	A90	AA0	AB0	AC0	AD0	AE0	AF0
	4	03	–	B00	B10	B20	B30	B40	B50	B60	B70	B80	B90	BA0	BB0	BC0	BD0	BE0	BF0
				STORAGE ADDRESSES (HEX)															
Type 2/3 Scanner-1	LIB position 1	02	–	840	842	844	846	848	84A	84C	84E	850	852	854	856	858	85A	85C	85E
	2	03	–	860	862	864	866	868	86A	86C	86E	870	872	874	876	878	87A	87C	87E
	3	04	–	880	882	884	886	888	88A	88C	88E	890	892	894	896	898	89A	89C	89E
	4*	05	–	8A0	8A2	8A4	8A6	8A8	8AA	8AC	8AE	8B0	8B2	8B4	8B6	8B8	8BA	8BC	8BE
	3705 EXPANSION MODULE 1			STORAGE ADDRESSES (HEX)															
Type 2/3 Scanner-2	LIB position 1	0A	–	940	942	944	946	948	94A	94C	94E	950	952	954	956	958	95A	95C	95E
	2	0B	–	960	962	964	966	968	96A	96C	96E	970	972	974	976	978	97A	97C	97E
	3	0C	–	980	982	984	986	988	98A	98C	98E	990	992	994	996	998	99A	99C	99E
	4	0D	–	9A0	9A2	9A4	9A6	9A8	9AA	9AC	9AE	9B0	9B2	9B4	9B6	9B8	9BA	9BC	9BE
	5*	0E	–	9C0	9C2	9C4	9C6	9C8	9CA	9CC	9CE	9D0	9D2	9D4	9D6	9D8	9DA	9DC	9DE
	6*	0F	–	9E0	9E2	9E4	9E6	9E8	9EA	9EC	9EE	9F0	9F2	9F4	9F6	9F8	9FA	9FC	9FE

Storage Address Assignments (Part 1 of 2)

		S/L (HEX) ↓	I →	INTERFACE ADDRESS ASSIGNMENTS (HEX) 0	1	2	3	4	5	6	7	8	9	A	B	C	D	E	F
	3705 EXPANSION MODULE 2			STORAGE ADDRESSES (HEX)															
Type 2/3 Scanner-3	LIB position 1	12	–	A40	A42	A44	A46	A48	A4A	A4C	A4E	A50	A52	A54	A56	A58	A5A	A5C	A5E
	2	13	–	A60	A62	A64	A66	A68	A6A	A6C	A6E	A70	A72	A74	A76	A78	A7A	A7C	A7E
	3	14	–	A80	A82	A84	A86	A88	A8A	A8C	A8E	A90	A92	A94	A96	A98	A9A	A9C	A9E
	4	15	–	AA0	AA2	AA4	AA6	AA8	AAA	AAC	AAE	AB0	AB2	AB4	AB6	AB8	ABA	ABC	ABE
	5*	16	–	AC0	AC2	AC4	AC6	AC8	ACA	ACC	ACE	AD0	AD2	AD4	AD6	AD8	ADA	ADC	ADE
	6*	17	–	AE0	AE2	AE4	AE6	AE8	AEA	AEC	AEE	AF0	AF2	AF4	AF6	AF8	AFA	AFC	AFE
	3705 EXPANSION MODULE 3			STORAGE ADDRESSES (HEX)															
Type 2/3 Scanner-4	LIB position 1	1A	–	B40	B42	B44	B46	B48	B4A	B4C	B4E	B50	B52	B54	B56	B58	B5A	B5C	B5E
	2	1B	–	B60	B62	B64	B66	B68	B6A	B6C	B6E	B70	B72	B74	B76	B78	B7A	B7C	B7E
	3	1C	–	B80	B82	B84	B86	B88	B8A	B8C	B8E	B90	B92	B94	B96	B98	B9A	B9C	B9C
	4	1D	–	BA0	BA2	BA4	BA6	BA8	BAA	BAC	BAE	BB0	BB2	BB4	BB6	BB8	BBA	BBC	BBE
	5*	1E	–	BC0	BC2	BC4	BC6	BC8	BCA	BCC	BCE	BD0	BD2	BD4	BD6	BD8	BDA	BDC	BDE
	6*	1F	–	BE0	BE2	BE4	BE6	BE8	BEA	BEE	BEE	BF0	BF2	BF4	BF6	BF8	BFA	BFC	BFE

*Not used for type 3 scanner
**Storage address X'6F0' is used for character service

Storage Address Assignments (Part 2 of 2)

Section 18: Index to NCP and EP Reference Material

This index provides a pointer to NCP and EP reference material such as service aids, diagnostic aids, debug information, etc. Items that are in this handbook have a page number listed with their entry. If an item is located in another publication, an (X) appears under that particular publication's key.

Key	Publication
A	*IBM 3705 Communications Controller, Network Control Program, Version 1, PLM,* SY30-3003.
	IBM 3704 and 3705 Communications Controllers, Network Control Program/VS, Version 2, PLM, SY30-3007.
B	*IBM 3704 and 3705 Communications Controllers, Network Control Program/VS, Version 4, PLM,* SY30-3013.
C	*IBM 3705 Communications Controller, Emulation Program, PLM,* SY30-3001.
D	*NCP/TCAM Network User's Guide,* GC30-3009.
E	*Guide to Using the IBM 3704 Communications Controller Control Panel,* GA27-3086.
	Guide to Using the IBM 3705 Communications Controller Control Panel, GA27-3087.
F	*IBM 3704 and 3705 Communications Controllers, Network Control Program, Generation and Utilities, Guide and Reference Manual,* GC30-3000.
	IBM 3704 and 3705 Communications Controllers, Network Control Program/VS, Generation and Utilities, Guide and Reference Manual, (for OS/VS TCAM Users), GC30-3007.
	IBM 3704 and 3705 Communications Controllers, Network Control Program/VS, Generation and Utilities, Guide and Reference Manual (for OS/VS VTAM Users), GC30-3008.
G	*IBM 3704 and 3705 Communications Controllers, Emulation Program, Generation and Utilities, Guide and Reference Manual,* GC30-3002.
H	*IBM 3704 and 3705 Communications Controller, Principles of Operation,* GC30-3004.

	KEY							
	A	B	C	D	E	F	G	H
abend codes 253								
addressing								
interface								X
line/LIB								X
protect key								X
storage								X
address trace (NCP)								
description	X	X						
implementation				X	X			
pointers to trace table 5								
BHR								
definition	X	X		X		X		
macros	X	X		X		X		
bring-up test (see initial test)								
BTU commands 203								
BTU responses 223								
BTU trace				X				
channel adapter trace		X						
codes								
abend 253								
EP generation							X	
NCP generation						X		
request 211								
response								
BTU 223								
system 223								
commands								
BTU 203								
channel	X	X						X
control	X	X						
network (NCP#) 211		X						
SDLC (NCP#) 219		X						
teleprocessing								
EP 221								
NCP 203								
control blocks (see data area)								
data area								
layouts (see table of contents)								
location				X				
relationships 1								
diagnostic wrap (EP)			X					
displays					X			
dump								
EP			X					
NCP						X		
dynamic display								
EP			X		X			
NCP	X	X			X			
error log (EP)			X					
error records								
MDR 281	X	X						
sense/status								
EP			X					
NCP	X	X						
error recovery								
EP			X					
NCP	X	X						
exception responses 231		X						
external registers								
labels	X	X						
usage 237								
format of storage								
EP			X					
NCP	X	X						
ICW 243								X
initial test								
EP					X		X	
NCP					X	X		

Name	Instruction	C, Z	3704 Cycles	3705 Cycles	FORMAT 0	1	2	3	4	5	6	7	8	9	10	11	12	13	14	15
B	Branch		2	1	1	0	1	0	1											
BCL	Branch on C Latch		2	1	1	0	0	1	1						T					± ¤
BZL	Branch on Z Latch		2	1	1	0	0	0	1											
BCT	Branch on Count		3	1	1	0	1	1	1				1							
BB	Branch on Bit		3	1	1	1	M	M	1				M		T					± ¤
LRI	Load Register Immediate	*	3	1	1	0	0	0	0											
ARI	Add Register Immediate	*	3	1	1	0	0	1	0											
SRI	Subtract Register Immediate	*	3	1	1	0	1	0	0											
CRI	Compare Register Immediate	*	3	1	1	0	1	1	0	R		N			I					
XRI	Exclusive Or Register Immediate	*	3	1	1	1	0	0	0											
ORI	Or Register Immediate	*	3	1	1	1	0	1	0											
NRI	And Register Immediate	*	3	1	1	1	1	0	0											
TRM	Test Register under Mask	*	3	1	1	1	1	1	0											
LCR	Load Character Register	*	3	1	0				0				0	0	0	0	1	0	0	0
ACR	Add Character Register	*	3	1	0				0				0	0	0	1	1	0	0	0
SCR	Subtract Character Register	*	3	1	0				0				0	0	1	0	1	0	0	0
CCR	Compare Character Register	*	3	1	0	R_2		N_2	0	R_1		N_1	0	0	1	1	1	0	0	0
XCR	Exclusive Or Character Register	*	3	1	0				0				0	1	0	0	1	0	0	0
OCR	OR Character Register	*	3	1	0				0				0	1	0	1	1	0	0	0
NCR	And Character Register	*	3	1	0				0				0	1	1	0	1	0	0	0
LCOR	Load Character with Offset Register	*	3	1	0				0				0	1	1	1	1	0	0	0
ICT	Insert Character and Count		5	2	0				0				0	0	0	1	0	0	0	0
STCT	Store Character and Count		5	2	0				0	R		N	0	0	1	1	0	0	0	0
IC	Insert Character	*	4	2	0				1				0			D				
STC	Store Character		4	2	0	B			1				1							
LH	Load Halfword	*	4	2	0				0				0			D				1
STH	Store Halfword		4	2	0				0	R			1							1
L	Load	*	5	2#	0				0				0			D			1	0
ST	Store		5	2#	0				0				1						1	0
LHR	Load Halfword Register	*	3	1	0				0				1	0	0	0	0	0	0	0
AHR	Add Halfword Register	*	3	1	0				0				1	0	0	1	0	0	0	0
SHR	Subtract Halfword Register	*	3	1	0				0				1	0	1	0	0	0	0	0
CHR	Compare Halfword Register	*	3	1	0				0				1	0	1	1	0	0	0	0
XHR	Exclusive Or Halfword Register	*	3	1	0				0				1	1	0	0	0	0	0	0
OHR	OR Halfword Register	*	3	1	0				0				1	1	0	1	0	0	0	0
NHR	And Halfword Register	*	3	1	0				0				1	1	1	0	0	0	0	0
LHOR	Load Halfword with Offset Register	*	3	1	0	R_2			0	R_1			1	1	1	1	0	0	0	0
LR	Load Register	*	3	1	0				0				1	0	0	0	1	0	0	0
AR	Add Register	*	3	1	0				0				1	0	0	1	1	0	0	0
SR	Subtract Register	*	3	1	0				0				1	0	1	0	1	0	0	0
CR	Compare Register	*	3	1	0				0				1	0	1	1	1	0	0	0
XR	Exclusive Or Register	*	3	1	0				0				1	1	0	0	1	0	0	0
OR	OR Register	*	3	1	0				0				1	1	0	1	1	0	0	0
NR	And Register		3	1	0				0				1	1	1	0	1	0	0	0
LOR	Load with Offset Register	*	3	1	0				0				1	1	1	1	1	0	0	0
BALR	Branch & Link Register		4	2	0				0				0	1	0	0	0	0	0	0
IN	Input		2	1	0		E		0	R					E		1	1	0	0
OUT	Output		2	1	0				0								0	1	0	0
BAL	Branch & Link		3	2	1*	0	1	1	1				0	0	0	0	0	0	A (16–31)	
LA	Load Address		3	2	1	0	1	1	1				0	0	1	0	0	0		
EXIT	Exit		2	1	1	0	1	1	1	0	0	0	0	1	0	0	0	0		

* = Instructions that can alter condition latches.
¤1 = –
0 = +
# = 3 Cycles with Extended Addressing

Instruction Bit Structure

GY30-3012-4

IBM

International Business Machines Corporation
Data Processing Division
1133 Westchester Avenue, White Plains, New York 10604
(U.S.A. only)

IBM World Trade Corporation
821 United Nations Plaza, New York, New York 10017
(International)

Printed in U.S.A.