ANL-7324
Mathematics and Computers
(TID-4500)
AEC Research and
Development Report

ARGONNE NATIONAL LABORATORY
9700 South Cass Avenue
Argonne, Illinois 60439

1620 MONITOR II-D
DISK STORAGE SUBROUTINES

by

Henry F. Krejci

Applied Mathematics Division

LEGAL NOTICE

This report was prepared as an account of Government sponsored work. Neither the United States, nor the Commission, nor any person acting on behalf of the Commission:

A. Makes any warranty or representation, expressed or implied, with respect to the accuracy, completeness, or usefulness of the information contained in this report, or that the use of any information, apparatus, method, or process disclosed in this report may not infringe privately owned rights; or

B. Assumes any liabilities with respect to the use of, or for damages resulting from the use of any information, apparatus, method, or process disclosed in this report.

As used in the above, "person acting on behalf of the Commission" includes any employee or contractor of the Commission, or employee of such contractor, to the extent that such employee or contractor of the Commission, or employee of such contractor prepares, disseminates, or provides access to, any information pursuant to his employment or contract with the Commission, or his employment with such contractor.

April 1967

DISTRIBUTION OF THIS DOCUMENT IS UNLIMITED

DISCLAIMER

This report was prepared as an account of work sponsored by an agency of the United States Government. Neither the United States Government nor any agency Thereof, nor any of their employees, makes any warranty, express or implied, or assumes any legal liability or responsibility for the accuracy, completeness, or usefulness of any information, apparatus, product, or process disclosed, or represents that its use would not infringe privately owned rights. Reference herein to any specific commercial product, process, or service by trade name, trademark, manufacturer, or otherwise does not necessarily constitute or imply its endorsement, recommendation, or favoring by the United States Government or any agency thereof. The views and opinions of authors expressed herein do not necessarily state or reflect those of the United States Government or any agency thereof.

DISCLAIMER

Portions of this document may be illegible in electronic image products. Images are produced from the best available original document.

TABLE OF CONTENTS

	Page
ABSTRACT	5
I. INTRODUCTION	5
II. DESCRIPTION	5
A. Requirements	5
B. Disk-pack Structure	5
C. Protection	6
D. File Type	6
E. The Subroutine Set	6
F. The Utility Program	7
III. OPERATION	7
A. Data Format	7
B. Word Lengths	7
C. Choice of Record Length	8
D. Record and File Definitions	8
E. Opening a File	8
F. Writing a Block of Data	8
G. Reading a Block of Data	9
H. Notes of Caution	9
I. Error Messages	9
J. Sample Use of the Second-disk System	10
1. Example 1	10
2. Example 2	10
3. Example 3	11
APPENDIX A The Utility Program	12
1. The File Description Table	12
2. The Utility Functions	12
3. Defining a Common File	13
4. Utility Program Messages	13
APPENDIX B Program Listings	15
APPENDIX C Flow Charts	29
ACKNOWLEDGMENT	39

1620 MONITOR II-D DISK STORAGE SUBROUTINES

by

Henry F. Krejci

ABSTRACT

A set of subroutines is described which provides the FORTRAN user with protected permanent disk storage of data on an IBM 1620 Monitor II-D System.

I. INTRODUCTION

The relatively fast and random access of disk storage is especially useful when the FORTRAN user is working with large data sets. The advantage of disk storage cannot be fully realized on a normal 1620 Monitor II-D System because the RECORD and FETCH statements provide only temporary disk storage. The system described in this report allows data to be stored on a user's own disk pack or on protected areas of a system pack.

The system, called the Second-disk System, consists of a set of four subroutines and a utility program. It allows a block of data containing any number of variables and/or arrays to be transferred directly between assigned core locations and disk storage.

II. DESCRIPTION

A. Requirements

The Second-disk System requires the exclusive use of a second-disk drive and is entirely independent of normal Monitor disk operations. The Monitor system remains defined as a one-disk system to prevent program storage from overflowing onto the second disk. The Second-disk System is written for an IBM 1311 Disk Drive with the "direct seek" special feature. This eliminates the wasted time of the normal return to home and seek from cylinder zero. The only serious restriction imposed by the Second-disk System is that both fixed- and floating-point word lengths must be even.

B. Disk-pack Structure

The storage capacity of a disk pack (2,000,000 digits) is often large enough to store several data sets. Therefore, with proper protection, one disk pack can serve many users. To accomplish this, a physical disk pack is divided into logical disk packs called files. Each file is identified by a unique file number and is divided into records. The records are the basic addressable unit available to the FORTRAN program and are numbered consecutively from zero.

The system uses the last 1% of disk storage (cylinder 99) as a table to store the record lengths and boundaries of each existing file. A utility program is used to initialize and update this table.

C. Protection

Before a file can be used, the record length and file boundaries must be known. The information is read from the table on cylinder 99 and is sent to the appropriate subroutine. This operation is known as "opening a file." Only one file may be open at any time, and data are written on or read from the portion of the open file indicated by the record number. Regardless of the size of the data block or the record number, data will not be allowed to exceed the boundaries of the open file.

For additional protection, the utility program may be used to place a file in a "read only" state (file protect). Data can be read from a protected file, but cannot be recorded until the utility program is again used to place the file in a "read/write" state.

If a disk pack that is normally used with the Second-disk System is mistakenly mounted on the Monitor system disk drive, disk operations will result in address checks, but the disk-stored data will not be altered.

D. File Type

All files except "file zero" are personal files and are assigned to individual users for their exclusive use. Personal files must be predefined, using the utility program, by specifying the record length and record capacity of the file. If sufficient disk space is available, file boundaries will be assigned and the file description will be entered in the table on cylinder 99.

"File zero" is a special "common file" available to all users at all times. It cannot be file-protected, and its record length cannot be predefined but must be specified by each program using the Common File. The total capacity of the Common File is predefined; therefore, the record capacity of the Common File depends on its record length.

E. The Subroutine Set*

The Second-disk Subroutine Set consists of four subroutines (listed below). Each is written to be compatible with calling programs of any word lengths (F and K). However, both fixed- and floating-point word lengths must be even to meet a disk hardware requirement.

1. Subroutine SDDEF is used to define the Common File record length. One argument, the record length, is transferred from the calling program to the subroutine SDKEY.

2. Subroutine SDKEY is used to open a file. The file number is received from the calling program, and the description of that file is sent to

*Appendixes B and C describe the Second-disk Subroutine Set in detail.

the subroutine SDREC. Only defined files can be opened. Normally the file boundaries of the Common File and the entire descriptions of personal files are read from the table on cylinder 99. However, the descriptions of the Common File and the last personal file opened are retained by SDKEY to reduce the time required to reopen these files. Thus, sorting between a personal file and the Common File without reading from cylinder 99 each time a file is opened is possible.

3. Subroutine SDREC is used to write on an open file. Three arguments are presented by the calling program, the record number, and the names of two variables that define the limits of core storage to be recorded. The entire block of data will be recorded, even if it exceeds the defined record length, and the record number will be advanced to the record following the last record written. However, writing will not be allowed to overflow into the next file.

4. Subroutine SDFET is used to read from an open file. This routine receives the same arguments as SDREC, makes appropriate changes in SDREC, and simulates a CALL SDREC. The actual reading is performed by SDREC.

F. The Utility Program*

The Second-disk Utility program is used to initialize a disk pack, to define a file, to delete a file definition, to declare a file "read only," to declare a file "read/write," and to dump the table of file descriptions. Since improper use of the utility program could result in loss of data, the utility functions are not available to the FORTRAN program, and the use of the utility program should be restricted to operating personnel. The proper use of the Second-disk Utility program is discussed in Appendix A.

III. OPERATION

A. Data Format

Data are transferred directly to or from core storage, and the only restriction on the block of data is that one variable, or array, must be floating-point. The data format is determined by listing the names of all the data elements (variables and arrays) in a COMMON statement. The list must be preceded by the name of a dummy integer. This integer is not recorded, but is altered by a disk read or write operation. The final element of the list must be the name of a floating-point variable or array. The names of the dummy integer and the final element are used to define the limits of the data block to be transferred to or from the disk.

B. Word Lengths

Data transfer to and from a disk must always begin at an even core location, and, since this system transfers data directly between the disk and assigned core locations, all addresses must be even. To make this possible, both fixed- and floating-point word lengths must be even.

---

*Appendixes B and C describe the Second-disk Utility program in detail.

C. Choice of Record Length

Each file is divided into equal-length records for addressing purposes only. The record length is chosen by the user, but must be a multiple of 100 digits. Read and write operations always start at the beginning of a record and use as many records as are necessary to transfer the block of data. Unless the length of the data block is an exact multiple of the record length, a portion of the last record is unused.

When the data blocks will always be the same size, there is no difficulty in choosing a record length. However, when the size of the data block is expected to vary widely, storage efficiency and the number of records required should be considered. Both the record length and the record number are limited by the fixed-point word length.

D. Record and File Definitions

If a personal file is to be used, both the record length and the record capacity (file length) of the file must have been predefined using the Second-disk Utility program.

If the Common File is to be used, the record length must be defined by the calling program before the file is opened. The following one-argument CALL statement is used to define the Common File record length:

```
CALL SDDEF (4)
```

where the fixed-point argument is the record length in hundreds of digits (sectors). In the above example, the Common File records have been defined as 400 digits long. The Common File record length need be defined only once during each program (or link program). However, the record length of the Common File does not need to be defined when the Common File is not used.

E. Opening a File

Opening a file makes it available for a read or write operation. Once a file is opened, it remains open until another file is opened or until another job or LINK PROGRAM is loaded. The following one-argument CALL statement is used to open a file:

```
CALL SDKEY (273)
```

where the fixed-point argument is the file number of the file to be opened. This argument should be a constant, rather than a variable, to minimize the possibility of opening a wrong file.

F. Writing a Block of Data (second-disk RECORD)

To write data, a file must be open and not declared "read only." The following three-argument CALL statement is used to write a block of data:

```
CALL SDREC (NREC,NDUM,FE)
```

where NREC is the record number (fixed-point), and NDUM and FE are the dummy integer and the final list element described in Section III-A above. The entire block of core storage between NDUM and FE, including FE, will be written, and the record number will be advanced to the record following the last record written. Since the record number is altered, it should always be presented as a variable.

G. Reading a Block of Data (second-disk FETCH)

Reading from the disk is similar to writing on the disk except that protected files may be read. The following three-argument CALL statement is used to read a block of data:

```
CALL SDFET (NREC,NDUM,FE)
```

The same arguments are presented for reading as for writing, and the format of the variables between NDUM and FE should be the same as the format used to store the data.

H. Notes of Caution

Because of the communication between the second-disk subroutines, it is recommended that none of them be declared LOCAL subroutines.

A group mark within a data block will not affect the storage of the data, but will terminate the transmission back to core when the data are read. Since a group mark could be left in core by a previous job, it is recommended that all variables to be recorded be set to some value.

If the index of a DO LOOP is used as a record number, cycles of the loop will be skipped because the index will be advanced during each disk read or write operation.

I. Error Messages

The following is a list of error messages and their descriptions. When an error occurs, the appropriate message is typed out and the 1620 halts.

DISK ERR	A hardware error has been detected. Pressing START will cause another attempt to be made.
FILE NO. XXXX IS UNDEFINED	An attempt has been made to open an undefined personal or common file. Pressing START will return control to the calling program.
NO FILE OPEN	A read or write operation has been attempted before a file has been opened. Pressing START will return control to the calling program.

FILE NO. XXXX OVERFLOW	A read or write operation will exceed the upper limit of file XXXX. Pressing START will return control to the calling program without completing the operation.
FILE NO. XXXX IS PROTECTED	A write operation has been attempted on a file that is declared read only. Pressing START will return control to the calling program without performing the write operation.

J. Sample Use of the Second-disk System

1. Example 1

The following program will read ten data sets from cards and store them on records zero through nine of file 37. Each set consists of a header card containing a four-digit set number and a ten-character name, followed by 200 cards containing the X-Y coordinates of 200 points. As indicated in the FANDK statement, the fixed-point word length is four digits and the floating-point word length is 12 digits (a ten-digit mantissa and a two-digit exponent). The length of a data set is computed as follows:

Set Number	One Fixed-point Word	4 Digits
Ten Character Name	Two Floating-point Words	24 Digits
X-Y Coordinates	400 Floating-point Words	4800 Digits
		4828 Digits

Since each set is 4828 digits long, a minimum record length of 4900 digits is required if a set is to be stored as one record. The utility program has been used to define file 37 as ten 4900 digit records.

```
‡‡ JOB
‡‡ FORX5
*FANDK1004
     DIMENSION X(200),Y(200)
     COMMON NDUM,NSET,HALF1,HALF2,X,Y
     CALL SDKEY (37)
     NREC=0
     DO  3  N=1,10
     READ 1, NSET,HALF1,HALF2
1    FORMAT (I4,6X,2A5)
     READ 2,(X(J),Y(J),J=1,200)
2    FORMAT (2F10.0)
3    CALL SDREC (NREC,NDUM,Y)
     CALL EXIT
     END
```

2. Example 2

This program will interchange records 1 and 6 of file 37 using core storage as a buffer.

```
## JOB
## FORX5
*FANDK1004
      DIMENSION X1(200),Y1(200),X2(200),Y2(200)
      COMMON NDUM1,NSET1,HALF11,HALF12,X1,Y1
      COMMON NDUM2,NSET2,HALF21,HALF22,X2,Y2
      CALL SDKEY (37)
      NREC=1
      CALL SDFET (NREC,NDUM1,Y1)
      NREC=6
      CALL SDFET (NREC,NDUM2,Y2)
      NREC=6
      CALL SDREC (NREC,NDUM1,Y1)
      NREC=1
      CALL SDREC (NREC,NDUM2,Y2)
      CALL EXIT
      END
```

3. Example 3

This program will interchange records 1 and 6 of file 37 using the common file as a buffer.

```
## JOB
## FORX5
*FANDK1004
      DIMENSION X(200),Y(200)
      COMMON NDUM,NSET,HALF1,HALF2,X,Y
      CALL SDDEF (49)
      CALL SDKEY (37)
      NREC=1
      CALL SDFET (NREC,NDUM,Y)
      CALL SDKEY (0)
      NREC=0
      CALL SDREC (NREC,NDUM,Y)
      CALL SDKEY (37)
      NREC=6
      CALL SDFET (NREC,NDUM,Y)
      NREC=1
      CALL SDREC (NREC,NDUM,Y)
      CALL SDKEY (0)
      NREC=0
      CALL SDFET (NREC,NDUM,Y)
      CALL SDKEY (37)
      NREC=6
      CALL SDREC (NREC,NDUM,Y)
      CALL EXIT
      END
```

APPENDIX A

The Utility Program

1. The File Description Table

The function of the Second-disk Utility program is to initialize and maintain the file-description table. This table is used by the second-disk system to find the boundaries and record length of a file, and to indicate file protection. The table occupies the entire last cylinder of a disk pack with five entries per sector, or a total of 1000 entries. Each entry describes one file, and the file number is implied by the position of the entry in the table. The first entry describes file zero (the common file), and the last entry describes file 999 (a dummy file used by the system). All other entries are available to describe personal files.

Each entry consists of four five-digit numbers. The first number is the address of the first sector of the file, and the second is the address of the sector following the file. The third number is the record length, whose magnitude is the number of sectors (100 digits) per record and is zero when the file is undefined. The sign of the record length indicates the state of the file. If the record length is positive, the file is in a "read/write" state. If the record length is negative, the file is in a "read only" state. The fourth number of an entry is the file number of the following file in storage. This number is used as a pointer to find blocks of available storage space. The pointer is needed because the order in which files are stored is not predictable, but depends on the file sizes and the order in which the files are defined and deleted.

2. The Utility Functions

Each of the six utility functions is described below. One control card is read for each function to be performed, and a description of the control card format precedes each function description.

a. Initialization of a Disk Pack

Cols 1-10 The function name INITIALIZE

The initialization utility function clears all file descriptions on a given disk pack. This function must be performed once before a disk pack is used, and should not be done again unless there is no valuable information left on the pack.

b. Defining a File

Cols 1-6 The function name DEFINE
Cols 11-13 The file number (three digits)
Cols 14-18 The record length (in sectors)
Cols 19-23 The file capacity (in records)

If the indicated file is not defined (the record length is zero) and sufficient disk storage space is available, file boundaries are assigned and the file description is entered in the file-description table.

c. Deleting a File Definition

Cols 1-6 The function name DELETE
Cols 11-13 The file number (three digits)

If the indicated file is defined (the record length is not zero), the file description is deleted by setting the record length to zero.

d. Declaring a File "Read Only"

Cols 1-9 The function name READ ONLY
Cols 11-13 The file number (three digits)

If the indicated file is defined and is in a "read/write" state (the record length is greater than zero), the file is set to "read only" by negating the record length.

e. Declaring a File "Read/Write"

Cols 1-10 The function name READ/WRITE
Cols 11-13 The file number (three digits)

If the indicated file is defined and is in a "read only" state (the record length is less than zero), the state of the file will be set to "read/write" by negating the record length (making it positive).

f. Dumping the File-description Table

Cols 1-10 The function name DUMP TABLE

This causes the numbers and descriptions of all existing files to be typed on the console typewriter.

3. Defining a Common File

A Common File is defined in the normal fashion, except that the indicated record length is never used. The actual record length is specified by each program using the Common File and is sent directly to the subroutine SDKEY. However, the indicated record length is important and should not be zero because the product of the indicated record length (cols 14-18) and the file capacity (cols 19-23) determines the amount of disk storage space to be reserved for the Common File.

4. Utility Program Messages

The utility program examines the first ten columns of each control card to determine the function to be performed. If it does not find one of the six function names described above, the message

UNDEFINED FUNCTION NAME

is typed and the 1620 halts. Pressing START will cause the next control card to be read.

If the name DUMP TABLE is found, the description of each existing file is typed out and the next control card is read. If one of the five other function names is found, one of the following messages is typed and the 1620 halts:

```
***PRESS START TO INITIALIZE DISK PACK***
***PRESS START TO DEFINE FILE NO. XXXX***
***PRESS START TO DELETE FILE NO. XXXX***
***PRESS START TO SET READ ONLY, FILE XXXX***
***PRESS START TO CLEAR READ ONLY, FILE XXXX***
```

At this time, the function may be inhibited by setting sense switch 4 and pressing START. If sense switch 4 is off, pressing START will allow the function to be attempted. When a function is performed, the message

```
***OPERATION COMPLETED***
```

is typed and the next control card is read.

If the function cannot be performed, one of the following messages, indicating why the function cannot be completed, is typed:

```
***FILE NO. IS TOO LARGE***
***FILE NO. IS TOO SMALL***
***FILE IS ASSIGNED, CANNOT DEFINE***
***SUFFICIENT SPACE UNAVAILABLE, CANNOT DEFINE***
***ZERO LENGTH FILE, CANNOT DEFINE***
***FILE IS UNASSIGNED, CANNOT DELETE***
***FILE IS ALREADY SET TO READ ONLY***
***FILE IS NOT SET TO READ ONLY***
***FILE IS UNDEFINED***
```

When a function is inhibited for one of the above reasons or because sense switch 4 was set, the message

```
***OPERATION CANCELLED***
```

is typed and the next control card is read.

APPENDIX B

Program Listings

```
*************************************************************************
***
*** SUBROUTINE SDDEF -- SECOND DISK DEFINE COMMON FILE
***      CALL SDDEF (NSRC)     WHERE NSRC IS THE COMMON FILE
***      RECORD LENGTH IN SECTORS (100 DIGITS).
*** SDDEF SENDS NSRC TO SDKEY
*** SDDEF FORCES THE LOADING OF SDKEY
*** SDDEF IS COMPATIBLE WITH ALL F AND K.
***
S       DS    ,*+101                                        00100 00000
        DC    6,987898,5-S                                  00095 00006
        DAC   6,SDDEF ,7-S                                  00093 00012
        DVLC  22-S,5,L,2,99,2,99,5,START-6,5,0,30,0         00078 00049
        DSC   17,0,0                                        00000 00017
        DORG  S-100                                         00000
        DC    5,0                                           00004 00005
START   BD    NENT,TAG,,      FIRST ENTRY TEST              00006 43 00098 00183
***FIRST ENTRY HOUSEKEEPING
        TDM   TAG,9,,         SET TAG                       00018 15 00183 00009
        TF    SEND+6,SDKEY                                  00030 26 00140 00181
FDAD    BNF   DIRAD,SEND+6,,  FIND THE DIRECT ADDRESS OF    00042 44 00086 00140
        CF    SEND+6,,,         SDKEY ENTRY POINT           00054 33 00140 00000
        TF    SEND+6,SEND+6,11                              00066 26 00140 00140
        B7    FDAD                                          00078 49 00042 00000
DIRAD   SM    SEND+6,6,10,    COMPUTE ADDRESS OF NSRC       00086 12 00140 00006
*** NORMAL ENTRY
NENT    SF    START-1                                       00098 32 00005 00000
        SM    START-1,5,10                                  00110 12 00005 00005
        TF    BUF,START-1,11,FETCH NSRC FROM FTN            00122 26 00193 00005
SEND    MA    00000,BUF,,     SEND NSRC TO SDKEY            00134 70 00000 00193
        CF    START-1                                       00146 33 00005 00000
        AM    START-1,2,10                                  00158 11 00005 00002
        B7    START-1,,6,     EXIT SDDEF                    00170 49 00005 00000
SDKEY   DC    5,0,,  ADDRESS OF SDKEY ENTRY POINT           00181 00005
TAG     DC    2,0                                           00183 00002
BUF     DC    10,0                                          00193 00010
A       DAC   6,SDKEY ,                                     00195 00012
        DVLC  ,5,SDKEY                                      00210 00005
        DC    2,0@,,          RECORD MARK AT EVEN LOC.      00212 00002
L       DS    ,A-1                                          00194 00000
        DEND                                                00000

*************************************************************************
***
*** SUBROUTINE SDKEY -- SECOND DISK KEY, TO OPEN A FILE ON THE
*** SECOND DISK    CALL SDKEY (NFILE)
*** SDKEY SENDS THE FOLLOWING TO SDREC
***     READ ONLY TAG
***     TOP OF NEXT CYLINDER
***     NO. SECT./REC.
***     LAST SECTOR ADDRESS PLUS ONE
***     FIRST SECTOR ADDRESS
*** SDKEY FORCES THE LOADING OF SDREC
*** SDKEY IS COMPATIBLE WITH ALL F AND K.
```

```
S       DS    ,*+101                                          00100 00000
        DC    6,987898,5-S                                    00095 00006
        DAC   6,SDKEY ,7-S                                    00093 00012
        DVLC  22-S,5,L,2,99,2,99,5,START-6,5,0,30,0           00078 00049
        DSC   17,0,0                                          00000 00017
        DORG  S-100                                           00000
NSRC    DC    5,0,, NO. SECT/REC COM. FILE -- SDDEF SET       00004 00005
        DC    5,0                                             00009 00005
START   BD    NENT,TAG1,,     FIRST ENTRY TEST                00010 43 00318 01062
*** FIRST ENTRY HOUSEKEEPING
        TDM   TAG1,9,,        SET TAG                         00022 15 01062 00009
        TF    ADR1,SDREC                                      00034 26 01091 01086
FDAD    BNF   DIRAD,ADR1,,    FIND THE DIRECT ADDRESS OF      00046 44 00090 01091
        CF    ADR1,,,           SDREC ENTRY POINT AND        00058 33 01091 00000
        TF    ADR1,ADR1,11,     COMPUTE ADDRESSED IN         00070 26 01091 01091
        B7    FDAD,,,           SDREC                        00082 49 00046 00000
DIRAD   TF    ADR2,ADR1                                       00090 26 01096 01091
        TF    ADR3,ADR1                                       00102 26 01101 01091
        TF    ADR4,ADR1                                       00114 26 01106 01091
        TF    ADR5,ADR1                                       00126 26 01111 01091
        TF    ADR6,ADR1                                       00138 26 01116 01091
        SM    ADR1,06,10,     ADR1=SDREC ENTRY PT.-06         00150 12 01091 00006
        SM    ADR2,11,10,     ADR2=SDREC ENTRY PT.-11         00162 12 01096 00011
        SM    ADR3,16,10,     ADR3=SDREC ENTRY PT.-16         00174 12 01101 00016
        SM    ADR4,21,10,     ADR4=SDREC ENTRY PT.-21         00186 12 01106 00021
        SM    ADR5,26,10,     ADR5=SDREC ENTRY PT.-26         00198 12 01111 00026
        SM    ADR6,31,10,     ADR6=SDREC ENTRY PT.-31         00210 12 01116 00031
        TFM   ADR4,40000,67,  SET TPCY IN SDREC               00222 16 01106 40000
        TFM   DCF+5,39800                                     00234 16 01259 39800
        K     DCF,701,,       INITIAL SEEK TO CYL 99          00246 34 01254 00701
RDK1    RN    DCF,702,,       READ SECTOR  39800              00258 36 01254 00702
        BNI   FCFD,3900                                       00270 47 00294 03900
        BTM   DSKR,RDK1,,     DISK ERROR                      00282 17 01006 00258
FCFD    TF    FSAC,SECT+4,,   FETCH COMMON FILE BOUNDS        00294 26 01121 01272
        TF    LSAC,SECT+9                                     00306 26 01126 01277
*** NORMAL ENTRY
NENT    SF    START-1                                         00318 32 00009 00000
        SM    START-1,5,10                                    00330 12 00009 00005
        TF    BUF10,START-1,11, FETCH FILE NUMBER             00342 26 01163 00009
        MA    FLNO,BUF10                                      00354 70 01152 01163
        TF    ADR5,FLNO,6,    SEND FILE NO. TO SDREC          00366 26 01111 01152
        CF    START-1                                         00378 33 00009 00000
        AM    START-1,2,10,   COMPUTE RETURN ADDRESS          00390 11 00009 00002
        CM    FLNO,00998,,    TEST FOR TOO LARGE              00402 14 01152 00998
        BI    UDFN,1100,,       A FILE NUMBER                 00414 46 00934 01100
        CM    FLNO,0                                          00426 14 01152 00000
        BI    OPCF,1200,,     TEST FOR COMMON FILE            00438 46 00854 01200
        C     FLNO,PVFN                                       00450 24 01152 01147
        BI    TPFD,1200,,     PREV. PERSONAL FILE TEST        00462 46 00798 01200
*** FETCH FILE DESCRIPTION FROM CYLINDER 99
        TFM   DCF+5,40000                                     00474 16 01259 40000
        S     DCF+5,ADR4,11,  COMPUTE DELTA CYL.              00486 22 01259 01106
        BI    DSECT,1200                                      00498 46 00534 01200
        K     DCF,702,,       DIRECT SEEK                     00510 34 01254 00702
```

```
        TFM   ADR4,40000,67,  UPDATE TPCY (IN SDREC)      00522 16 01106 40000
DSECT   TF    ACC,N398,,      COMPUTE SECTOR ADR          00534 26 01076 01069
        A     ACC-1,FLNO                                  00546 21 01075 01152
        A     ACC-1,FLNO                                  00558 21 01075 01152
        TF    DCF+5,ACC-2                                 00570 26 01259 01074
RDK2    RN    DCF,702,,       READ ONE SECTOR             00582 36 01254 00702
        BNI   FUFD,3900                                   00594 47 00618 03900
        BTM   DSKR,RDK2,,     DISK ERROR                  00606 17 01006 00582
FUFD    SF    ACC-1,,,        FETCH USERS FILE DESCRIP    00618 32 01075 00000
        TFM   ADRB,SECT+4                                 00630 16 01081 01272
        A     ADRB,ACC                                    00642 21 01081 01076
        TF    FSAU,ADRB,11                                00654 26 01131 0108I
        AM    ADRB,5,10                                   00666 11 01081 00005
        TF    LSAU,ADRB,11                                00678 26 01136 0108I
        AM    ADRB,5,10                                   00690 11 01081 00005
        TF    NSRU,ADRB,11                                00702 26 01141 0108I
        CM    NSRU,0                                      00714 14 01141 00000
        BI    UDFN,1200,,     UNDEFINED FILE TEST         00726 46 00934 01200
        TF    PVFN,FLNO                                   00738 26 01147 01152
        TDM   ROTG,0,,        CLEAR READ ONLY TAG         00750 15 01142 00000
        BNF   TPFD,NSRU,,     FILE IS PROTECTED IF        00762 44 00798 01141
        CF    NSRU,,,         NSRU IS NEGATIVE            00774 33 01141 00000
        TDM   ROTG,9,,        SET READ ONLY TAG           00786 15 01142 00009
*** TRANSMIT PERSONAL FILE DESCRIPTION TO SDREC
TPFD    TF    ADR1,FSAU,6                                 00798 26 0109I 01131
        TF    ADR2,LSAU,6                                 00810 26 01096 01136
        TF    ADR3,NSRU,6                                 00822 26 0110I 01141
        TD    ADR6,ROTG,6                                 00834 25 01116 01142
        B7    START-1,,6,     EXIT SDKEY                  00846 49 00009 00000
*** OPEN COMMON FILE
OPCF    CM    NSRC,0                                      00854 14 00004 00000
        BI    UDFN,1200,,     UNDEFINED FILE TEST         00866 46 00934 01200
*** TRANSMIT COMMON FILE DESCRIPTION TO SDREC
        TF    ADR1,FSAC,6                                 00878 26 0109I 01121
        TF    ADR2,LSAC,6                                 00890 26 01096 01126
        TF    ADR3,NSRC,6                                 00902 26 0110I 00004
        TDM   ADR6,0,6                                    00914 15 01116 00000
        B7    START-1,,6,     EXIT SDKEY                  00926 49 00009 00000
*** UNDEFINED FILE NO.
UDFN    K     ,102                                        00934 34 00000 00102
        WA    MES1A,100                                   00946 39 01165 00100
        WN    FLNO-2,100                                  00958 38 01150 00100
        WA    MES1B,100                                   00970 39 01191 00100
        H                                                 00982 48 00000 00000
        B7    START-1,,6,     EXIT SDKEY                  00994 49 00009 00000
        DC    5,0                                         01005 00005
DSKR    K     ,102,,          SUBROUTINE TO TYPE          01006 34 00000 00102
        WA    MES2,100,,        OUT ***DISK ERR***,       01018 39 01225 00100
        H     ,,,               HALT, RE-SEEK, AND        01030 48 00000 00000
        K     DCF,701,,         TRY AGAIN.                01042 34 01254 00701
        B7    DSKR-1,,6                                   01054 49 01005 00000
TAG1    DC    2,0                                         01062 00002
N398    DC    7,3980000                                   01069 00007
ACC     DC    7,0                                         01076 00007
```

```
ADRB    DC    5,0                                                01081 00005
SDREC   DC    5,0,,  ADDRESS OF SDREC ENTRY POINT                01086 00005
ADR1    DC    5,0,,  ADDRESS OF FSAD IN SDREC                    01091 00005
ADR2    DC    5,0,,  ADDRESS OF LSAD IN SDREC                    01096 00005
ADR3    DC    5,0,,  ADDRESS OF NSPR IN SDREC                    01101 00005
ADR4    DC    5,0,,  ADDRESS OF TPCY IN SDREC                    01106 00005
ADR5    DC    5,0,,  ADDRESS OF FLNO IN SDREC                    01111 00005
ADR6    DC    5,0,,  ADDRESS OF ROTG IN SDREC                    01116 00005
FSAC    DC    5,0,,  COMMON FILE FIRST SECT ADR                  01121 00005
LSAC    DC    5,0,,  COMMON FILE LAST SECT ADR +1                01126 00005
FSAU    DC    5,0,,  PERSONAL FILE FIRST SECT ADR                01131 00005
LSAU    DC    5,0,,  PERSONAL FILE LAST SECT ADR +1              01136 00005
NSRU    DC    5,0,,  PERSONAL FILE NO. SEC./REC.                 01141 00005
ROTG    DC    1,0,,  PERSONAL FILE READ ONLY TAG                 01142 00001
PVFN    DC    5,0,,  PREVIOUS NON-ZERO FILE NO.                  01147 00005
FLNO    DC    5,0,,  FILE NO.                                    01152 00005
        DC    1,@                                                01153 00001
BUF10   DC    10,0                                               01163 00010
MES1A   DAC   13,***FILE NO. @                                   01165 00026
MES1B   DAC   17, IS UNDEFINED***@                               01191 00034
MES2    DAC   15,***DISK ERR***@                                 01225 00030
DCF     DDA   ,3,00000,001,SECT                                  01254 00006 3̄00000
                                                                 01260 00003 0̄01
                                                                 01263 00005 0̄1268
SECT    DSB   1,100                                              01268 00100
A       DAC   6,SDREC ,                                          01369 00012
        DVLC  ,5,SDREC                                           01384 00005
        DC    2,0@,,          RECORD MARK AT EVEN LOC.           01386 00002
L       DS    ,A-1                                               01368 00000
        DEND                                                     00000

*************************************************************************
***
*** SUBROUTINE SDFET -- SECOND DISK FETCH
*** THIS SUBROUTINE NEGATES THE BASE ADDRESS TRANSMITTED BY THE
*** CALL AND SIMULATES A CALL SDREC, THE ACTUAL FETCH OPERATION
*** IS PERFORMED IN SDREC.
*** SDFET FORCES THE LOADING OF SDREC
*** SDFET IS COMPATIBLE WITH ALL F AND K.
***
S       DS    ,*+101                                             00100 00000
        DC    6,987898,5-S                                       00095̄ 00006
        DAC   6,SDFET ,7-S                                       00093̄ 00012
        DVLC  22-S,5,L,2,99,2,99,5,START-6,5,0,30,0              00078̄ 00049
        DSC   17,0,0                                             00000 00017
        DORG  S-100                                              00000
        DC    5,0                                                00004 00005
START   SF    START-1,,,      NEGATE BASE ADDRESS                 00006 3̄2 00005 00000
CALL    BT    00000,START-1,,SIMULATE CALL SDREC                 00018 27̄ 00000 00005
A       DAC   6,SDREC ,                                          00031 00012
        DVLC  ,5,CALL+6                                          00046 00005
        DC    2,0@,,          RECORD MARK AT EVEN LOC.           00048 00002
L       DS    ,A-1                                               00030 00000
        DEND                                                     00000
```

```
*********************************************************************
***
*** SUBROUTINE SDREC -- SECOND DISK RECORD
*** THIS SUBROUTINE PERFORMS BOTH RECORD AND FETCH OPERATIONS --
*** WHEN THE BASE ADDRESS TRANSMITTED BY THE CALL IS POSITIVE (SDREC
*** IS CALLED BY FORTRAN), DATA IS WRITTEN ON THE SECOND DISK.
*** WHEN THE BASE ADDRESS TRANSMITTED BY THE CALL IS NEGATIVE (SDFET
*** HAS BEEN CALLED BY FORTRAN), DATA IS READ FROM THE SECOND DISK.
*** THE FOLLOWING THREE ARGUEMENTS ARE PRESENTED --
***             NREC -- RECORD NUMBER, NON-SUBSCRIPTED INTEGER
***             LAST -- DUMMY NON-SUBSCRIPTED INTEGER TO
***                       INDICATE END OF DATA
***             FIRST -- NAME OF FIRST DATA ELEMENT
*** SDREC IS COMPATIBLE WITH ALL F AND K.
***
S       DS    ,*+101                                          00100 00000
        DC    6,987898,5-S                                    00095 00006
        DAC   6,SDREC ,7-S                                    00093 00012
        DVLC  22-S,5,L,2,99,2,99,5,START-6,5,0,30,0           00078 00049
        DSC   17,0,0                                          00000 00017
        DORG  S-100                                           00000
ROTG    DC    2,0,, READ ONLY TAG -- SDKEY SET                00001 00002
FLNO    DC    5,0,, FILE NUMBER -- SDKEY SET                  00006 00005
TPCY    DC    5,0,, TOP OF PREV. CYL. - 1 SDKEY SET           00011 00005
NSPR    DC    5,0,, NO. SECT. PER REC. -- SDKEY SET           00016 00005
LSAD    DC    5,0,, LAST SECT. ADR. +1 -- SDKEY SET           00021 00005
FSAD    DC    5,0,, FIRST SECT. ADR -- SDKEY SET              00026 00005
        DC    5,0,,                                           00031 00005
START   BD    NENT,TAG1,,     FIRST ENTRY TEST                00032 43 00184 01296
*** INHIBIT FIRST ENTRY IF NO FILE IS OPEN
        CM    NSPR,0                                          00044 14 00016 00000
        BNI   HSKP,1200,,     FILE OPEN TEST                  00056 47 00124 01200
        K     ,102,,          TYPE --                         00068 34 00000 00102
        WA    MES1,100,,       NO FILE OPEN                   00080 39 01347 00100
        CF    START-1                                         00092 33 00031 00000
        AM    START-1,15,10                                   00104 11 00031 00015
        B7    ERRH                                            00116 49 01192 00000
*** FIRST ENTRY HOUSEKEEPING
HSKP    TF    KMO,K                                           00124 26 01298 02221
        SM    KMO,1,10,       KMO=K-1                         00136 12 01298 00001
        TF    FPO,F                                           00148 26 01300 02219
        AM    FPO,1,10,       FPO=F+1                         00160 11 01300 00001
        TDM   TAG1,9                                          00172 15 01296 00009
*** NORMAL ENTRY
NENT    BNF   SUREC,START-1,,RECORD OR FETCH TEST             00184 44 00240 00031
        CF    START-1                                         00196 33 00031 00000
        TDM   WDK1+1,6,,      SET-UP FOR A FETCH              00208 15 00961 00006
        TDM   WDK2+1,6,,      OPERATION                       00220 15 00817 00006
        B7    F3ADR                                           00232 49 00276 00000
SUREC   BD    FPERR,ROTG,,    FILE PROTECT TEST               00240 43 01052 00001
        TDM   WDK1+1,8,,      SET-UP FOR A RECORD             00252 15 00961 00008
        TDM   WDK2+1,8,,      OPERATION                       00264 15 00817 00008
F3ADR   AM    START-1,5,10,   FETCH THREE ADDRESSES           00276 11 00031 00005
        MA    NREC,START-1,11, NREC                           00288 70 01335 0003I
```

```
        AM    START-1,5,10,       LAST                    00300 1̄1 00031 0000̄5
        MA    LAST,START-1,11,      FIRST                 00312 7̄0 01340 0003̄1
        AM    START-1,5,10                                00324 1̄1 00031 0000̄5
        MA    FIRST,START-1,11                            00336 7̄0 01345 0003̄1
        S     LAST,KMO,,      LAST=LAST-(K-1)             00348 2̄2 01340 01298
        S     FIRST,FPO,,     FIRST=FIRST-(F+1)           00360 2̄2 01345 01300
        TD    LAST,GMK,6,     SET GROUP MARK              00372 2̄5 0134̄0 01295
        TF    DLEN,LAST,,     COMPUTE DATA LENGTH         00384 2̄6 01305 01340
        S     DLEN,FIRST,,    IN DIGITS                   00396 2̄2 01305 01345
        TFM   SLEN,0                                      00408 1̄6 01310 0̄0000
        TF    BUF,DLEN                                    00420 2̄6 01644 01305
ASLEN   AM    SLEN,1,10,      COMPUTE DATA LENGTH         00432 1̄1 01310 0000̄1
        SM    BUF,100,8,      IN SECTORS                  00444 1̄2 01644 00̄100
        BI    ASLEN,1100                                  00456 4̄6 00432 01100
        TFM   RLEN,0                                      00468 1̄6 01315 0̄0000
        TF    BUF,SLEN                                    00480 2̄6 01644 01310
ARLEN   AM    RLEN,1,10,      COMPUTE DATA LENGTH         00492 1̄1 01315 0000̄1
        S     BUF,NSPR,,      IN RECORDS                  00504 2̄2 01644 00016
        BI    ARLEN,1100                                  00516 4̄6 00492 01100
        M     NSPR,NREC,11,   DETERMINE FIRST SECTOR      00528 2̄3 00016 0133̄5
        MA    FSECT,00099                                 00540 7̄0 01320 00099
        A     FSECT,FSAD                                  00552 2̄1 01320 00026
        A     NREC,RLEN,6,    UPDATE RECORD NUMBER        00564 2̄1 0133̄5 01315
        TFM   TNCY,0                                      00576 1̄6 01325 0̄0000
        TF    TNCY-3,FSECT-3,,  DETERMINE THE TOP         00588 2̄6 01322 01317
DTNC    AM    TNCY,200,9,     OF THE NEXT SECTOR          00600 1̄1 01325 002̄00
        C     TNCY,FSECT                                  00612 2̄4 01325 01320
        BNI   DTNC,1100                                   00624 4̄7 00600 01100
        TF    THCY,TNCY,,     DETERMINE THE NO OF         00636 2̄6 01330 01325
        S     THCY,FSECT,,    SECTORS LEFT THIS SECTOR    00648 2̄2 01330 01320
        TF    DCF+5,TNCY,,    COMPUTE DELTA CYL           00660 2̄6 01531 01325
        S     DCF+5,TPCY                                  00672 2̄2 01531 00011
        BI    COFX,1200                                   00684 4̄6 00720 01200
        K     DCF,702,,       DIRECT SEEK                 00696 3̄4 01526 00702
        TF    TPCY,TNCY,,     UPDATE TPCY                 00708 2̄6 00011 01325
COFX    C     SLEN,THCY,,     CYL OVERFLOW TEST           00720 2̄4 01310 01330
        BI    OVFL,1100                                   00732 4̄6 00864 01100
        TF    DCF+8,SLEN,,    SET UP DISK CONTROL FIELD   00744 2̄6 01534 01310
        TF    DCF+5,FSECT                                 00756 2̄6 01531 01320
        TF    DCF+13,FIRST                                00768 2̄6 01539 01345
        A     FSECT,SLEN                                  00780 2̄1 01320 01310
        C     FSECT,LSAD                                  00792 2̄4 01320 00021
        BI    FOVF,1100,,     FILE OVERFLOW TEST          00804 4̄6 01132 01100
WDK2    WN    DCF,700,,       READ/WRITE DISK             00816 3̄8 01526 00700
        BI    *+12,3700                                   00828 4̄6 00840 03700
        BNI   EXIT,3900                                   00840 4̄7 01204 03900
        BTM   DSKR,WDK2,,     DISK ERROR                  00852 1̄7 01240 0̄0816
OVFL    TF    DCF+8,THCY,,    CYLINDER OVERFLOW CASE --   00864 2̄6 01534 01330
        TF    DCF+5,FSECT,,   SET UP DISK CONTROL FIELD   00876 2̄6 01531 01320
        TF    DCF+13,FIRST                                00888 2̄6 01539 01345
        A     FSECT,THCY,,    FSECT=FSECT+THCY            00900 2̄1 01320 01330
        S     SLEN,THCY,,     SLEN=SLEN-THCY              00912 2̄2 01310 01330
        A     FIRST-2,THCY,,  FIRST=FIRST+100*THCY        00924 2̄1 01343 01330
        C     FSECT,LSAD                                  00936 2̄4 01320 00021
```

```
        BI    FOVF,1100,,     FILE OVERFLOW TEST          00948 46 01132 01100
WDK1    WN    DCF,702,,       READ/WRITE DISK TO CYL END  00960 38 01526 00702
        BNI   ACY,3900                                    00972 47 00996 03900
        BTM   DSKR,WDK1,,     DISK ERROR                  00984 17 01240 00960
ACY     TFM   THCY,200                                    00996 16 01330 00200
        TFM   DCF+5,200                                   01008 16 01531 00200
        K     DCF,702,,       DIRECT SEEK, +1 CYL         01020 34 01526 00702
        AM    TPCY,200,8,     UPDATE TPCY                 01032 11 00011 00200
        B7    COFX                                        01044 49 00720 00000
FPERR   K     ,102,,          TYPE --                     01052 34 00000 00102
        WA    MES4A,100,,      FILE NO. XXXX IS PROTECTE  01064 39 01467 00100
        TF    BUF,FLNO                                    01076 26 01644 00006
        WN    BUF-2,100                                   01088 38 01642 00100
        WA    MES4B,100                                   01100 39 01493 00100
        AM    START-1,15,10                               01112 11 00031 00015
        B7    ERRH                                        01124 49 01192 00000
FOVF    K     ,102,,          TYPE --                     01132 34 00000 00102
        WA    MES2A,100,,      FILE NO. XXXX OVERFLOW     01144 39 01385 00100
        TF    BUF,FLNO                                    01156 26 01644 00006
        WN    BUF-2,100                                   01168 38 01642 00100
        WA    MES2B,100                                   01180 39 01411 00100
ERRH    H                                                 01192 48 00000 00000
EXIT    TDM   LAST,0,6,       CLEAR GROUP MARK            01204 15 01340 00000
        AM    START-1,2,10                                01216 11 00031 00002
        B7    START-1,,6,     EXIT SDREC                  01228 49 00031 00000
        DC    5,0                                         01239 00005
DSKR    K     ,102,,          SUBROUTINE TO TYPE          01240 34 00000 00102
        WA    MES3,100,,        OUT ***DISK ERR***,       01252 39 01437 00100
        H     ,,,               HALT, RE-SEEK, AND        01264 48 00000 00000
        K     DCF,701,,         TRY AGAIN.                01276 34 01526 00701
        B7    DSKR-1,,6                                   01288 49 01239 00000
GMK     DGM                                               01295 00001
TAG1    DC    1,0,,           FIRST ENTRY TAG             01296 00001
KMO     DC    2,0,,           K-1                         01298 00002
FPO     DC    2,0,,           FPO=F+1                     01300 00002
DLEN    DC    5,0,,           DATA LENGTH IN DIGITS       01305 00005
SLEN    DC    5,0,,           DATA LENGTH IN SECTORS      01310 00005
RLEN    DC    5,0,,           DATA LENGTH IN RECORDS      01315 00005
FSECT   DC    5,0,,           FIRST SECTOR ADDRESS        01320 00005
TNCY    DC    5,0,,           TOP OF NEXT CYLINDER        01325 00005
THCY    DC    5,0,,           SECTORS LEFT THIS CYLINDER  01330 00005
NREC    DC    5,0,,           ADDRESS OF RECORD NUMBER    01335 00005
LAST    DC    5,0,,           ADDRESS OF LAST DATA        01340 00005
FIRST   DC    5,0,,           ADDRESS OF FIRST DATA       01345 00005
MES1    DAC   19,***NO FILE OPEN***@                      01347 00038
MES2A   DAC   13,***FILE NO. @                            01385 00026
MES2B   DAC   13, OVERFLOW***@                            01411 00026
MES3    DAC   15,***DISK ERR***@                          01437 00030
MES4A   DAC   13,***FILE NO. @                            01467 00026
MES4B   DAC   17, IS PROTECTED***@                        01493 00034
DCF     DDA   ,3,00000,000,00000                          01526 00006 30000
                                                          01532 00003 000
                                                          01535 00005 00000
SECB    DSB   1,100                                       01540 00100
```

```
BUF     DC   5,0                                                  01644 00005
        DC   1,@                                                  01645 00001
L       DC   1,@,,          RECORD MARK AT EVEN LOC.              01646 00001
F       DS   ,2219                                                02219 00000
K       DS   ,2221                                                02221 00000
        DEND                                                      00000

*********************************************************************
***
*** SECOND DISK UTILITY PROGRAM
*** FUNCTION SELECTION
        DORG 10000                                                10000
START   K    ,102                                                 10000 34 00000 00102
        RA   CARD,500,,     READ CONTROL CARD                     10012 37 14533 00500
        BNR  NCON,CARD,,    TEST FOR REC. MK. IN COL 2            10024 45 10092 14533
        WA   MES8,100,,     TYPE --                               10036 39 13145 00100
        K    ,102,,          TRP ERR                              10048 34 00000 00102
        WA   MES9,100,,      MUST RELOAD                          10060 39 13161 00100
        H                                                         10072 48 00000 00000
        B7   00796                                                10084 49 00796 00000
NCON    TFM  FILE-2,0,911                                         10092 16 14308 00000
        TNS  CARD+24,FILE                                         10104 72 14557 14310
        CF   FILE-2                                               10116 33 14308 00000
        C    FN1,CARD+18                                          10128 24 12737 14551
        BI   INTL,1200,,    TEST FOR INITIALIZE                   10140 46 10392 01200
        C    FN2,CARD+10                                          10152 24 12749 14543
        BI   DEFN,1200,,    TEST FOR DEFINE                       10164 46 10580 01200
        C    FN3,CARD+10                                          10176 24 12761 14543
        BI   DELT,1200,,    TEST FOR DELETE                       10188 46 11244 01200
        C    FN4,CARD+16                                          10200 24 12779 14549
        BI   RDOY,1200,,    TEST FOR READ ONLY                    10212 46 11544 01200
        C    FN5,CARD+18                                          10224 24 12799 14551
        BI   RDWR,1200,,    TEST FOR READY/WRITE                  10236 46 11716 01200
        C    FN6,CARD+18                                          10248 24 12819 14551
        BI   DUMP,1200,,    TEST FOR DUMP TABLE                   10260 46 11932 01200
        WA   MES1,100,,     TYPE --                               10272 39 12821 00100
        K    ,102,,          UNDEFINED FUNCTION NAME              10284 34 00000 00102
        H                                                         10296 48 00000 00000
        B7   START                                                10308 49 10000 00000
*** FUNCTION TERMINATION
DONE    K    ,102,,         TYPE --                               10316 34 00000 00102
        WA   MES2,100,,      OPERATION COMPLETED                  10328 39 12881 00100
        B7   CNCL+24                                              10340 49 10372 00000
CNCL    K    ,102,,         TYPE --                               10348 34 00000 00102
        WA   MES3,100,,      OPERATION CANCELLED                  10360 39 12933 00100
        K    ,102                                                 10372 34 00000 00102
        B7   START                                                10384 49 10000 00000
*** INITIALIZE
INTL    WA   MES11,100,,    TYPE --                               10392 39 13185 00100
        H    ,,,             PRESS START TO INITIALIZE            10404 48 00000 00000
        BI   CNCL,400,,     CANCEL IF SWITCH FOUR                 10416 46 10348 00400
        TRNM SECT,IENT-4                                          10428 30 14416 14333
```

```
        TRNM  SECT+20,IENT-4                                    10440 30 14436 14333
        TRNM  SECT+40,IENT-4,,SET FIVE CLEARED TABLE            10452 30 14456 14333
        TRNM  SECT+60,IENT-4,,ENTRIES IN SECTOR BUFFER          10464 30 14476 14333
        TRNM  SECT+80,IENT-4                                    10476 30 14496 14333
        TFM   DCF+5,39800                                       10488 16 14407 39800
INSK    K     DCF,701                                           10500 34 14402 00701
INDW    WN    DCF,702,,       WRITE 200 SECTORS                 10512 38 14402 00702
        BI    INSK,3900                                         10524 46 10500 03900
        CM    DCF+5,39999                                       10536 14 14407 39999
        BI    DONE,1200                                         10548 46 10316 01200
        AM    DCF+5,1,10                                        10560 11 14407 00001
        B7    INDW                                              10572 49 10512 00000
*** DEFINE
DEFN    WA    MES21,100,,     TYPE --                           10580 39 13269 00100
        WN    FILE-2,100,,     PRESS START TO DEFINE FIL        10592 38 14308 00100
        WA    MES99,100                                         10604 39 14297 00100
        H                                                       10616 48 00000 00000
        BI    CNCL,400,,      CANCEL IF SWITCH FOUR             10628 46 10348 00400
        BTM   TPFN,000,9,     TRAP OUT OF RANGE FILE NO.        10640 17 12354 00000
        BTM   TBLE,00,10,     READ FILE DESCRIPTION             10652 17 12470 00000
        CM    RECL,0                                            10664 14 14326 00000
        BNI   DFAA,1200,,     ALREADY ASSIGNED TEST             10676 47 11024 01200
        TNS   CARD+34,NSPR,,  CONVERT RECORD LENGTH             10688 72 14567 14363
        TNS   CARD+44,NRPF,,  CONVERT FILE CAPACITY             10700 72 14577 14368
        M     NSPR,NRPF,,     COMPUTE FILE LENGTH               10712 23 14363 14368
        MA    NSPF,00099,,     IN SECTORS                       10724 70 14373 00099
        CM    NSPF,0                                            10736 14 14373 00000
        BNI   DENZ,1200,,     TEST FOR ZERO LENGTH FILE         10748 47 10792 01200
        K     ,102,,          TYPE --                           10760 34 00000 00102
        WA    MES24,100,,      ZERO LENGTH FILE, CANNOT         10772 39 13515 00100
        B7    CNCL                                              10784 49 10348 00000
DENZ    TF    BUF1,FILE                                         10792 26 14378 14310
        TFM   FILE,999                                          10804 16 14310 00999
        BTM   TBLE,00,10,     READ FILE 999 FOR POINTER         10816 17 12470 00000
DEML    TF    BUF2,LSEC,,     DEFINE, MAIN LOOP --              10828 26 14383 14321
        TF    BUF3,FILE,,       SCAN FOR BLOCK OF               10840 26 14388 14310
        TF    FILE,NEXT,,       AVAILABLE DISK STORAGE          10852 26 14310 14331
        CM    NEXT,1000                                         10864 14 14331 01000
        BI    DELF,1200,,     TEST FOR LAST DEFINED FILE        10876 46 10944 01200
        BTM   TBLE,00,10,     READ NEXT FILE DESCRIPTION        10888 17 12470 00000
        S     FSEC,BUF2                                         10900 22 14316 14383
        C     FSEC,NSPF                                         10912 24 14316 14373
        BI    DESF,1300,,     TEST FOR SPACE BETWN FILES        10924 46 11056 01300
        B7    DEML                                              10936 49 10828 00000
DELF    TFM   BUF4,39800                                        10944 16 14393 39800
        S     BUF4,BUF2                                         10956 22 14393 14383
        C     BUF4,NSPF,,     TEST FOR SPACE AFTER THE          10968 24 14393 14373
        BI    DESF,1300,,      LAST DEFINED FILE                10980 46 11056 01300
        K     ,102,,          TYPE --                           10992 34 00000 00102
        WA    MES23,100,,      SUFFICIENT SPACE UNAVAIL.        11004 39 13415 00100
        B7    CNCL                                              11016 49 10348 00000
DFAA    K     ,102,,          TYPE --                           11024 34 00000 00102
        WA    MES22,100,,      FILE IS ASSIGNED, CANNOT         11036 39 13339 00100
        B7    CNCL                                              11048 49 10348 00000
```

```
DESF    TF    NEXT,FILE,,     SPACE FOUND --                11056 26 14331 14310
        TF    FILE,BUF1                                     11068 26 14310 14378
        TF    FSEC,BUF2                                     11080 26 14316 14383
        TF    LSEC,BUF2                                     11092 26 14321 14383
        A     LSEC,NSPF                                     11104 21 14321 14373
        TF    RECL,NSPR                                     11116 26 14326 14363
        BTM   TBLE,09,10,     RECORD NEW FILE DEFINITION    11128 17 12470 00009
        K     ,102                                          11140 34 00000 00102
        WN    FILE-2,100                                    11152 38 14308 00100
        K     ,101                                          11164 34 00000 00101
        WN    FSEC-4,100,,    TYPE NEW FILE DESCRIPTION     11176 38 14312 00100
        TF    FILE,BUF3                                     11188 26 14310 14388
        BTM   TBLE,00,10,     AND                           11200 17 12470 00000
        TF    NEXT,BUF1                                     11212 26 14331 14378
        BTM   TBLE,09,10,     UPDATE TABLE.                 11224 17 12470 00009
        B7    DONE                                          11236 49 10316 00000
*** DELETE
DELT    WA    MES31,100,,     TYPE --                       11244 39 13591 00100
        WN    FILE-2,100,,     PRESS START TO DELETE FIL    11256 38 14308 00100
        WA    MES99,100                                     11268 39 14297 00100
        H                                                   11280 48 00000 00000
        BI    CNCL,400,,      CANCEL IF SWITCH FOUR         11292 46 10348 00400
        BTM   TPFN,000,9,     TRAP OUT OF RANGE FILE NO.    11304 17 12354 00000
        BTM   TBLE,00,10,     READ FILE DESCRIPTION         11316 17 12470 00000
        CM    RECL,0                                        11328 14 14326 00000
        BI    DEUF,1200,,     UNDEFINED FILE TEST           11340 46 11512 01200
        TF    BUF1,FILE                                     11352 26 14378 14310
        TF    BUF2,NEXT                                     11364 26 14383 14331
        TFM   NEXT,0                                        11376 16 14331 00000
        TFM   RECL,0                                        11388 16 14326 00000
        BTM   TBLE,09,10,     WRITE FILE DESCRIPTION        11400 17 12470 00009
        TFM   FILE,999                                      11412 16 14310 00999
DELP    BTM   TBLE,00,10,     READ FILE DESCRIPTION         11424 17 12470 00000
        C     BUF1,NEXT,,      TO FIND PRECEDING FILE       11436 24 14378 14331
        BI    DEUP,1200                                     11448 46 11480 01200
        TF    FILE,NEXT                                     11460 26 14310 14331
        B7    DELP                                          11472 49 11424 00000
DEUP    TF    NEXT,BUF2,,     UPDATE POINTER                11480 26 14331 14383
        BTM   TBLE,09,10,     WRITE FILE DESCRIPTION        11492 17 12470 00009
        B7    DONE                                          11504 49 10316 00000
DEUF    K     ,102,,          TYPE --                       11512 34 00000 00102
        WA    MES32,100,,      FILE IS UNASSIGNED,          11524 39 13661 00100
        B7    CNCL,,,          CANNOT DELETE                11536 49 10348 00000
*** SET READ ONLY (FILE PROTECT)
RDOY    WA    MES41,100,,     TYPE --                       11544 39 13741 00100
        WN    FILE-2,100,,     PRESS STRT TO SET READ ON    11556 38 14308 00100
        WA    MES99,100                                     11568 39 14297 00100
        H                                                   11580 48 00000 00000
        BI    CNCL,400,,      CANCEL IF SWITCH FOUR         11592 46 10348 00400
        BTM   TPFN,001,9,     TRAP OUT OF RANGE FILE NO.    11604 17 12354 00001
        BTM   TBLE,00,10,     READ FILE DESCRIPTION         11616 17 12470 00000
        CM    RECL,0                                        11628 14 14326 00000
        BI    UNDF,1200,,     UNDEFINED FILE TEST           11640 46 11900 01200
        BNI   RDFP,1100,,     ALREADY PROTECTED TEST        11652 47 11684 01100
```

```
        SF    RECL,,,          SET FILE PROTECT              11664 32 14326 00000
        B7    REWR                                           11676 49 11848 00000
RDFP    K     ,102,,           TYPE --                       11684 34 00000 00102
        WA    MES42,100,,       FILE IS ALREADY SET TO RE    11696 39 13827 00100
        B7    CNCL                                           11708 49 10348 00000
*** SET READ/WRITE (RELEASE FILE PROTECT)
RDWR    WA    MES51,100,,      TYPE --                       11716 39 13905 00100
        WN    FILE-2,100,,      PRESS START TO SET READ/W    11728 38 14308 00100
        WA    MES99,100                                      11740 39 14297 00100
        H                                                    11752 48 00000 00000
        BI    CNCL,400,,       CANCEL IF SWITCH FOUR         11764 46 10348 00400
        BTM   TPFN,001,9,      TRAP OUT OF RANGE FILE NO.    11776 17 12354 00001
        BTM   TBLE,00,10,      READ FILE DESCRIPTION         11788 17 12470 00000
        CM    RECL,0                                         11800 14 14326 00000
        BI    UNDF,1200,,      UNDEFINED FILE TEST           11812 46 11900 01200
        BI    RDAR,1100,,      ALREADY READ/WRITE TEST       11824 46 11868 01100
        CF    RECL,,,          CLEAR FILE PROTECT            11836 33 14326 00000
REWR    BTM   TBLE,09,10,      RE WRITE FILE DESCRIPTION     11848 17 12470 00009
        B7    DONE                                           11860 49 10316 00000
RDAR    K     ,102,,           TYPE --                       11868 34 00000 00102
        WA    MES52,100,,       FILE IS NOT SET TO READ O    11880 39 13995 00100
        B7    CNCL                                           11892 49 10348 00000
UNDF    K     ,102,,           TYPE --                       11900 34 00000 00102
        WA    MES6,100,,        FILE IS UNDEFINED            11912 39 13097 00100
        B7    CNCL                                           11924 49 10348 00000
*** DUMP FILE DESCRIPTION TABLE
DUMP    K     ,102,,           TYPE HEADING --               11932 34 00000 00102
        WA    MES61,100,,       ***FILE DESCRIPTION TABLE    11944 39 14065 00100
        K     ,102                                           11956 34 00000 00102
        K     ,102,,           FILE  FIRST  LAST   REC       11968 34 00000 00102
        WA    MES62,100,,      NO.   SECTOR SECTOR LEN       11980 39 14133 00100
        K     ,102                                           11992 34 00000 00102
        WA    MES63,100                                      12004 39 14191 00100
        K     ,102                                           12016 34 00000 00102
        K     ,102                                           12028 34 00000 00102
        TFM   FILE,999                                       12040 16 14310 00999
        BTM   TBLE,00,10,      FETCH FIRST POINTER           12052 17 12470 00000
DULP    CM    NEXT,1000                                      12064 14 14331 01000
        BI    DONE,1200,,      LAST FILE TEST                12076 46 10316 01200
        TF    FILE,NEXT                                      12088 26 14310 14331
        BTM   TBLE,00,10,      READ A FILE DESCRIPTION       12100 17 12470 00000
        WN    FILE-2,100,,     TYPE FILE NO.                 12112 38 14308 00100
        WA    MES67,100                                      12124 39 14289 00100
        MA    BUFN,FSEC                                      12136 70 14399 14316
        WN    BUFN-4,100,,     TYPE FIRST SECTOR ADDRESS     12148 38 14395 00100
        WA    MES67,100                                      12160 39 14289 00100
        MA    BUFN,LSEC                                      12172 70 14399 14321
        SM    BUFN,1,10                                      12184 12 14399 00001
        WN    BUFN-4,100,,     TYPE LAST SECTOR ADDRESS      12196 38 14395 00100
        WA    MES67,100                                      12208 39 14289 00100
        CM    FILE,0                                         12220 14 14310 00000
        BNI   DUPF,1200,,      PERSONAL FILE TEST            12232 47 12264 01200
        WA    MES64,100                                      12244 39 14249 00100
        B7    DUPC                                           12256 49 12288 00000
```

```
DUPF    MA    BUFN,RECL                                    12264 70 14399 14326
        WN    BUFN-4,100,,    TYPE RECORD LENGTH           12276 38 14395 00100
DUPC    BNF   DURW,RECL,,     FILE PROTECT TEST            12288 44 12320 14326
        WA    MES66,100,,     TYPE -- RO.                  12300 39 14275 00100
        B7    DUCR                                         12312 49 12332 00000
DURW    WA    MES65,100,,     TYPE -- R/W                  12320 39 14261 00100
DUCR    K     ,102                                         12332 34 00000 00102
        B7    DULP                                         12344 49 12064 00000
*** SUBROUTINE TO TRAP OUT OF RANGE FILE NUMBERS
***  MIN IS TRANSMITTED BY CALL
***  MAX IS 998
        DC    3,0,,           MINIMUM FILE NUMBER          12353 00003
TPFN    CM    FILE,999,9                                   12354 14 14310 00999
        BI    TPLG,1300                                    12366 46 12404 01300
        C     FILE,TPFN-1                                  12378 24 14310 12353
        BNI   TPSM,1300                                    12390 47 12436 01300
        BB    ,,,             FILE NO IS OKAY              12402 42 00000 00000
        DORG  *-9                                          12404
TPLG    K     ,102,,          TYPE --                      12404 34 00000 00102
        WA    MES4,100,,       FILE NO IS TOO LARGE        12416 39 12985 00100
        B7    CNCL                                         12428 49 10348 00000
TPSM    K     ,102,,          TYPE --                      12436 34 00000 00102
        WA    MES5,100,,       FILE NO IS TOO SMALL        12448 39 13041 00100
        B7    CNCL                                         12460 49 10348 00000
*** SUBROUTINE TO READ OR WRITE A FILE DESCRIPTION TABLE ENTRY
***  READ IF INDICATOR IS ZERO
***  WRITE IF INDICATOR IS NON-ZERO
        DC    2,0,,           READ/WRITE INDICATOR         12468 00002
TBLE    TF    ACC,N398                                     12470 26 14530 14523
        A     ACC-1,FILE,,    DETERMINE SECTOR ADDRESS     12482 21 14529 14310
        A     ACC-1,FILE,,     FROM FILE NUMBER            12494 21 14529 14310
        TF    DCF+5,ACC-2                                  12506 26 14407 14528
        B7    TBDR                                         12518 49 12538 00000
TBSK    K     DCF,701                                      12526 34 14402 00701
TBDR    RN    DCF,702,,       READ SECTOR                  12538 36 14402 00702
        BI    TBSK,3900                                    12550 46 12526 03900
        SF    ACC-1                                        12562 32 14529 00000
        TFM   ADR1,SECT                                    12574 16 14358 14416
        A     ADR1,ACC                                     12586 21 14358 14530
        BD    TBWR,TBLE-1,,   READ/WRITE TEST              12598 43 12660 12469
        TF    TBMK+6,ADR1                                  12610 26 12640 14358
        AM    TBMK+6,20,10                                 12622 11 12640 00020
TBMK    TD    00000,RMK                                    12634 25 00000 14311
        TRNM  FSEC-4,ADR1,11,READ ENTRY                    12646 30 14312 14358
        BB                                                 12658 42 00000 00000
        DORG  *-9                                          12660
TBWR    TRNM  ADR1,FSEC-4,6,  WRITE ENTRY                  12660 30 14358 14312
        B7    TBDW                                         12672 49 12692 00000
TBER    K     DCF,701                                      12680 34 14402 00701
TBDW    WN    DCF,702,,       RECORD UPDATED SECTOR        12692 38 14402 00702
        BI    TBER,3900                                    12704 46 12680 03900
        BB                                                 12716 42 00000 00000
        DORG  *-9                                          12718
FN1     DSAC  10,INITIALIZE                                12737 00020
```

```
FN2     DSAC  6,DEFINE                                          12749 00012
FN3     DSAC  6,DELETE                                          12761 00012
FN4     DSAC  9,READ ONLY                                       12779 00018
FN5     DSAC 10,READ/WRITE                                      12799 00020
FN6     DSAC 10,DUMP TABLE                                      12819 00020
MES1    DAC  30,***UNDEFINED FUNCTION NAME***@,                 12821 00060
MES2    DAC  26,***OPERATION COMPLETED***@,                     12881 00052
MES3    DAC  26,***OPERATION CANCELLED***@,                     12933 00052
MES4    DAC  28,***FILE NO. IS TOO LARGE***@,                   12985 00056
MES5    DAC  28,***FILE NO. IS TOO SMALL***@,                   13041 00056
MES6    DAC  24,***FILE IS UNDEFINED***@,                       13097 00048
MES8    DAC  08,TRP ERR@,                                       13145 00016
MES9    DAC  12,MUST RELOAD@,                                   13161 00024
MES11   DAC  42,***PRESS START TO INITIALIZE DISK PACK***@,
                                                                13185 00084
MES21   DAC  35,***PRESS START TO DEFINE FILE NO. @,            13269 00070
MES22   DAC  38,***FILE IS ASSIGNED, CANNOT DEFINE***@,
                                                                13339 00076
MES23   DAC  50,***SUFFICIENT SPACE UNAVAILABLE, CANNOT DEFINE***@,
                                                                13415 00100
MES24   DAC  38,***ZERO LENGTH FILE, CANNOT DEFINE***@,
                                                                13515 00076
MES31   DAC  35,***PRESS START TO DELETE FILE NO. @,            13591 00070
MES32   DAC  40,***FILE IS UNASSIGNED, CANNOT DELETE***@,
                                                                13661 00080
MES41   DAC  43,***PRESS START TO SET READ ONLY, FILE NO. @,
                                                                13741 00086
MES42   DAC  39,***FILE IS ALREADY SET TO READ ONLY***@,
                                                                13827 00078
MES51   DAC  45,***PRESS START TO CLEAR READ ONLY, FILE NO. @,
                                                                13905 00090
MES52   DAC  35,***FILE IS NOT SET TO READ ONLY***@,            13995 00070
MES61   DAC  34,***FILE DESCRIPTION TABLE DUMP***@,             14065 00068
MES62   DAC  29,FILE  FIRST   LAST    RECORD@,                  14133 00058
MES63   DAC  29,NO.   SECTOR  SECTOR  LENGTH@,                  14191 00058
MES64   DAC  06,-----@,                                         14249 00012
MES65   DAC  07,   R/W@,                                        14261 00014
MES66   DAC  07,   RO.@,                                        14275 00014
MES67   DAC  04,   @,                                           14289 00008
MES99   DAC  05, ***@                                           14297 00010
FILE    DC   5,0,, FILE NUMBER                                  14310 00005
RMK     DC   1,@                                                14311 00001
FSEC    DC   5,0,, FIRST SECTOR ADDRESS                         14316 00005
LSEC    DC   5,0,, LAST SECTOR ADDRESS PLUS ONE                 14321 00005
RECL    DC   5,0,, RECORD LENGTH (IN SECTORS)                   14326 00005
NEXT    DC   5,0,, NEXT FILE POINTER                            14331 00005
        DC   1,@                                                14332 00001
IENT    DC   5,20000,, FILE DESCRIPTION TABLE                   14337 00005
        DC   5,20000,,  ENTRY USED TO INITIALIZE                14342 00005
        DC   5,00000,,  A DISK PACK                             14347 00005
        DC   5,01000                                            14352 00005
        DC   1,@                                                14353 00001
ADR1    DC   5,0                                                14358 00005
NSPR    DC   5,0,, RECORD LENGTH IN SECTORS                     14363 00005
```

```
NRPF    DC    5,0,, FILE CAPACITY IN RECORDS          14368 00005
NSPF    DC    5,0,, FILE LENGTH IN SECTORS            14373 00005
BUF1    DC    5,0                                     14378 00005
BUF2    DC    5,0                                     14383 00005
BUF3    DC    5,0                                     14388 00005
BUF4    DC    5,0                                     14393 00005
BUFN    DC    6,0                                     14399 00006
        DC    1,@                                     14400 00001
DCF     DDA   ,3,00000,001,SECT                       14402 00006 3̄00000
                                                      14408 00003 0̄01
                                                      14411 00005 1̄4416
SECT    DSB   1,100                                   14416 00100
        DC    1,@                                     14516 00001
N398    DC    7,3980000                               14523 00007
ACC     DC    7,0                                     14530 00007
CARD    DAC   40,
                                                      14533 00080
        DAC   40,
                                                      14613 00080
        DEND  START                                   10000
```

APPENDIX C

Flow Charts

SUBROUTINE SDDEF

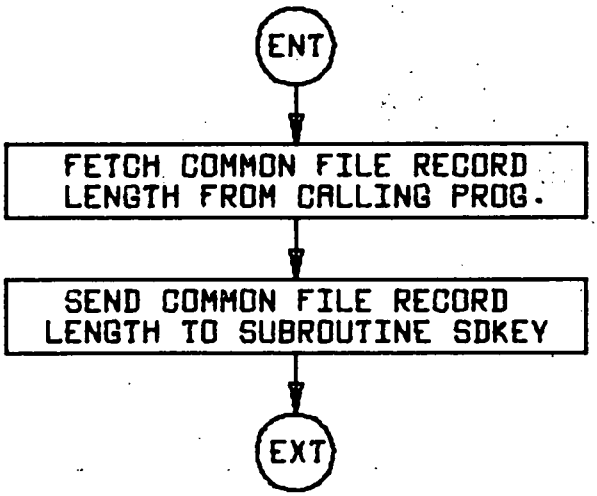

SUBROUTINE SDFET

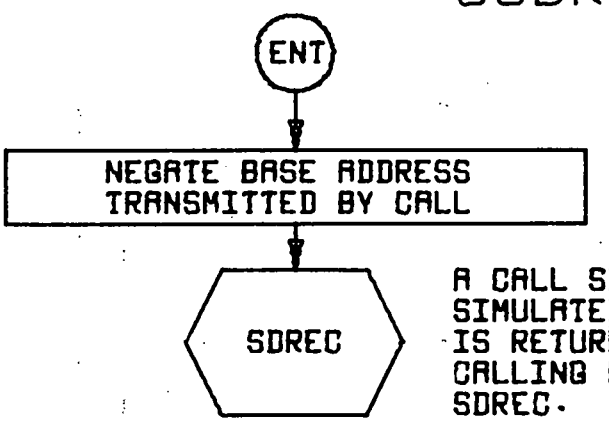

A CALL SDREC IS SIMULATED AND CONTROL IS RETURNED TO THE CALLING PROGRAM BY SDREC.

SUBROUTINE SDKEY

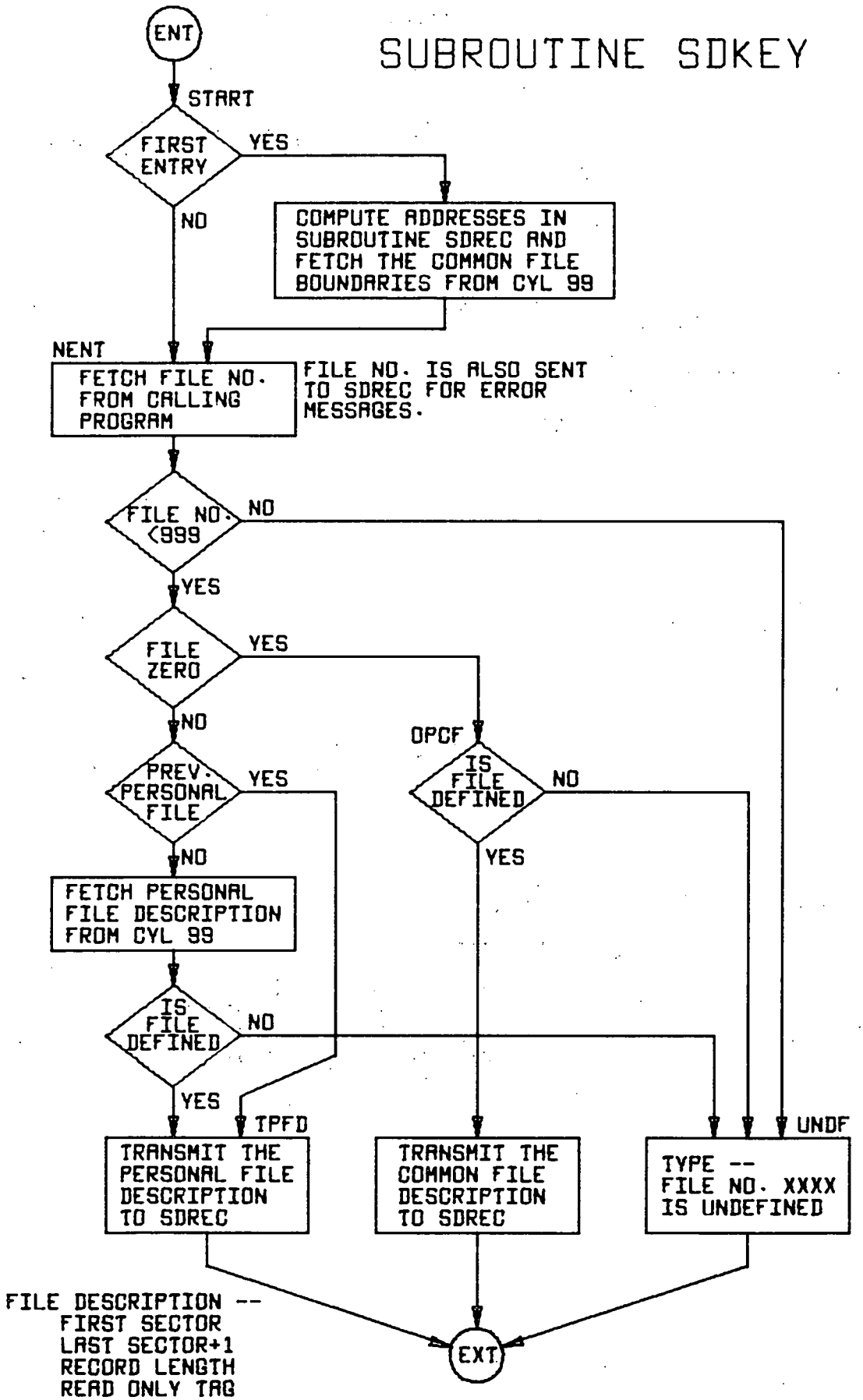

SUBROUTINE SDREC

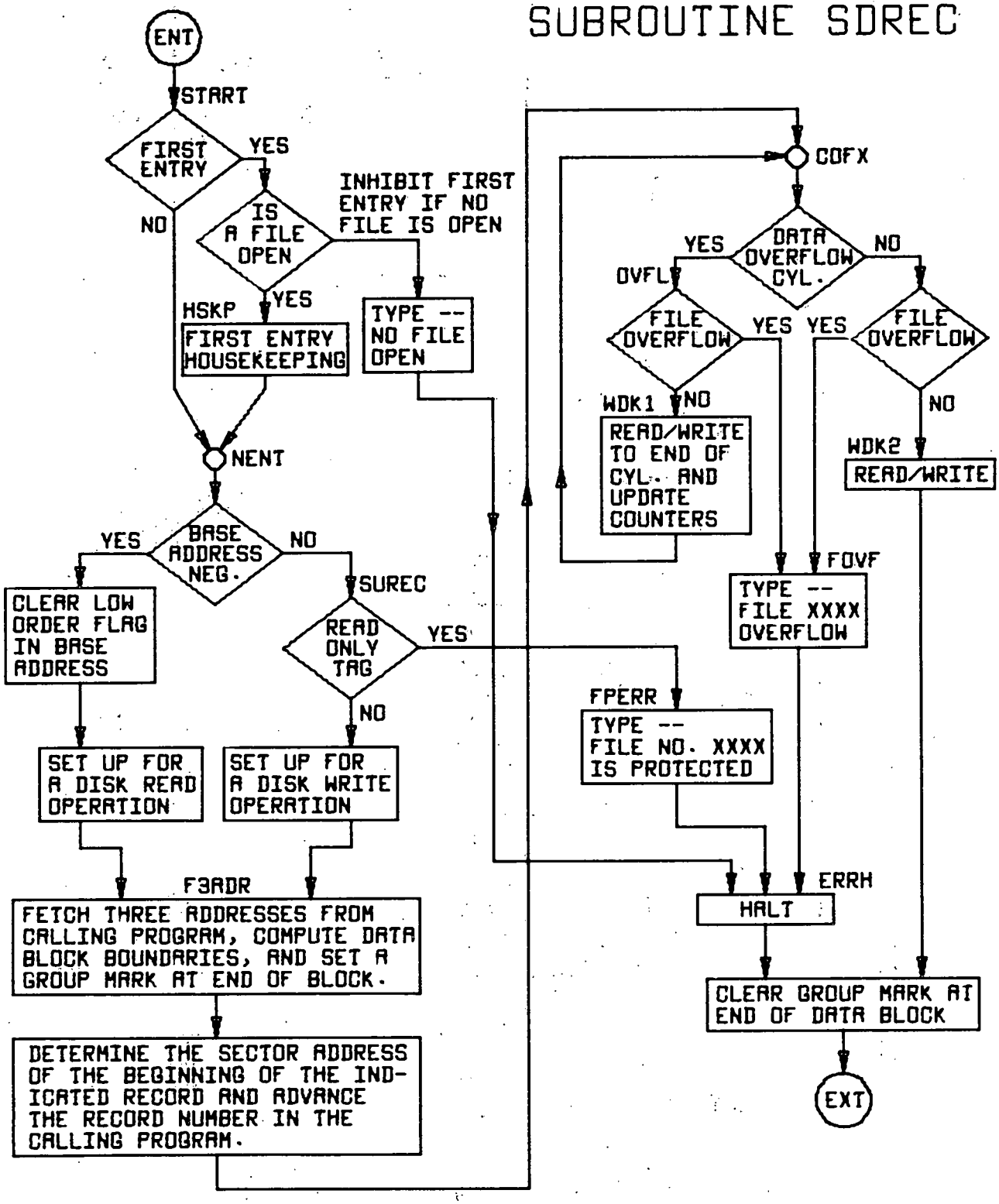

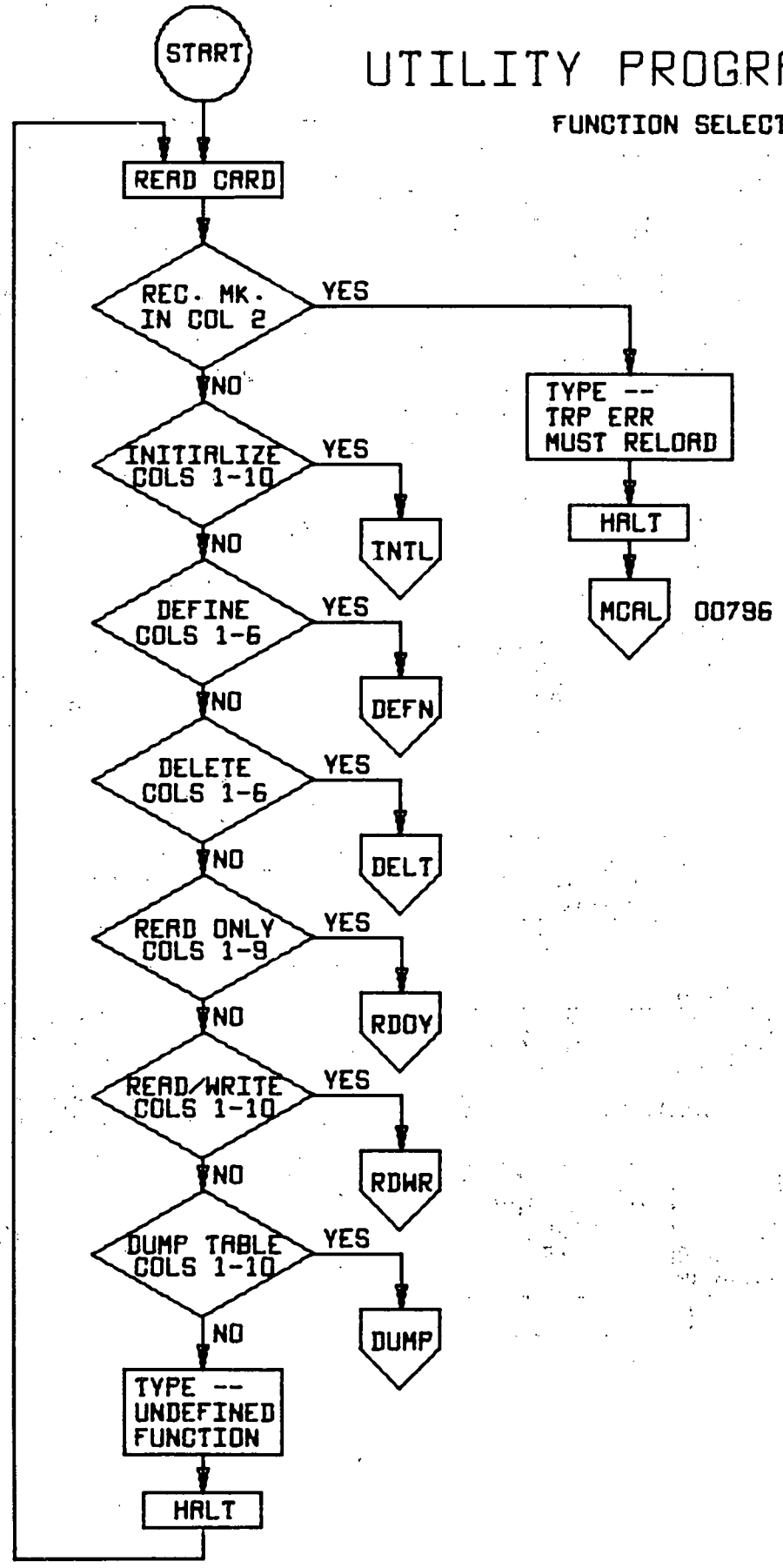
START
UTILITY PROGRAM
FUNCTION SELECTION
READ CARD
REC. MK. IN COL 2
YES
NO
TYPE -- TRP ERR MUST RELOAD
HALT
MCAL
00796
INITIALIZE COLS 1-10
YES
NO
INTL
DEFINE COLS 1-6
YES
NO
DEFN
DELETE COLS 1-6
YES
NO
DELT
READ ONLY COLS 1-9
YES
NO
RDOY
READ/WRITE COLS 1-10
YES
NO
RDWR
DUMP TABLE COLS 1-10
YES
NO
DUMP
TYPE -- UNDEFINED FUNCTION
HALT

TERMINATION OF
UTILITY FUNCTIONS

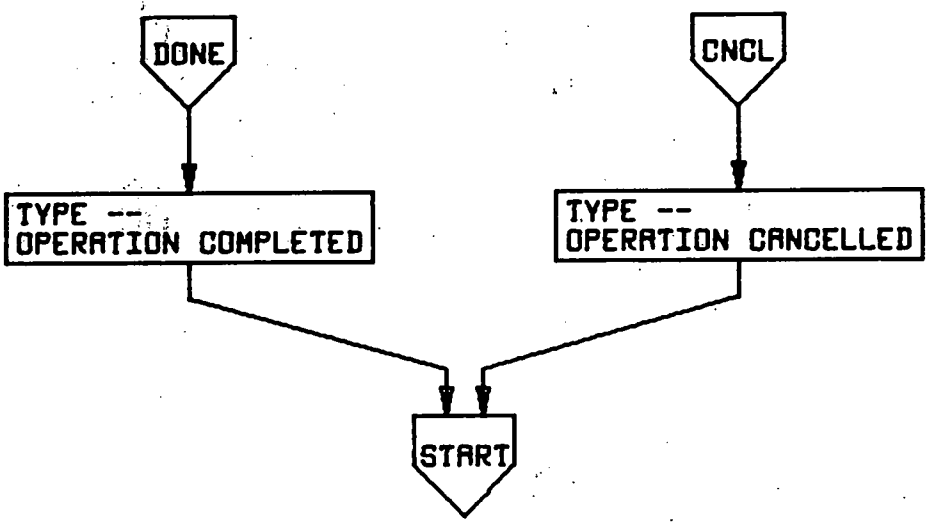

UTILITY FUNCTION
INITIALIZE

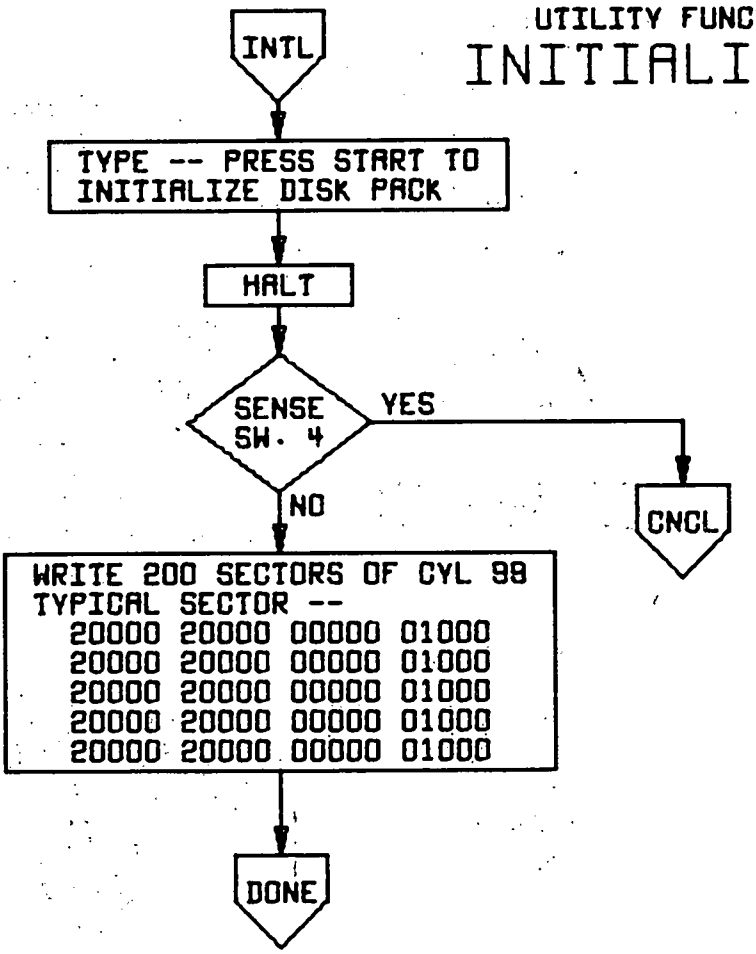

UTILITY FUNCTION

DEFINE

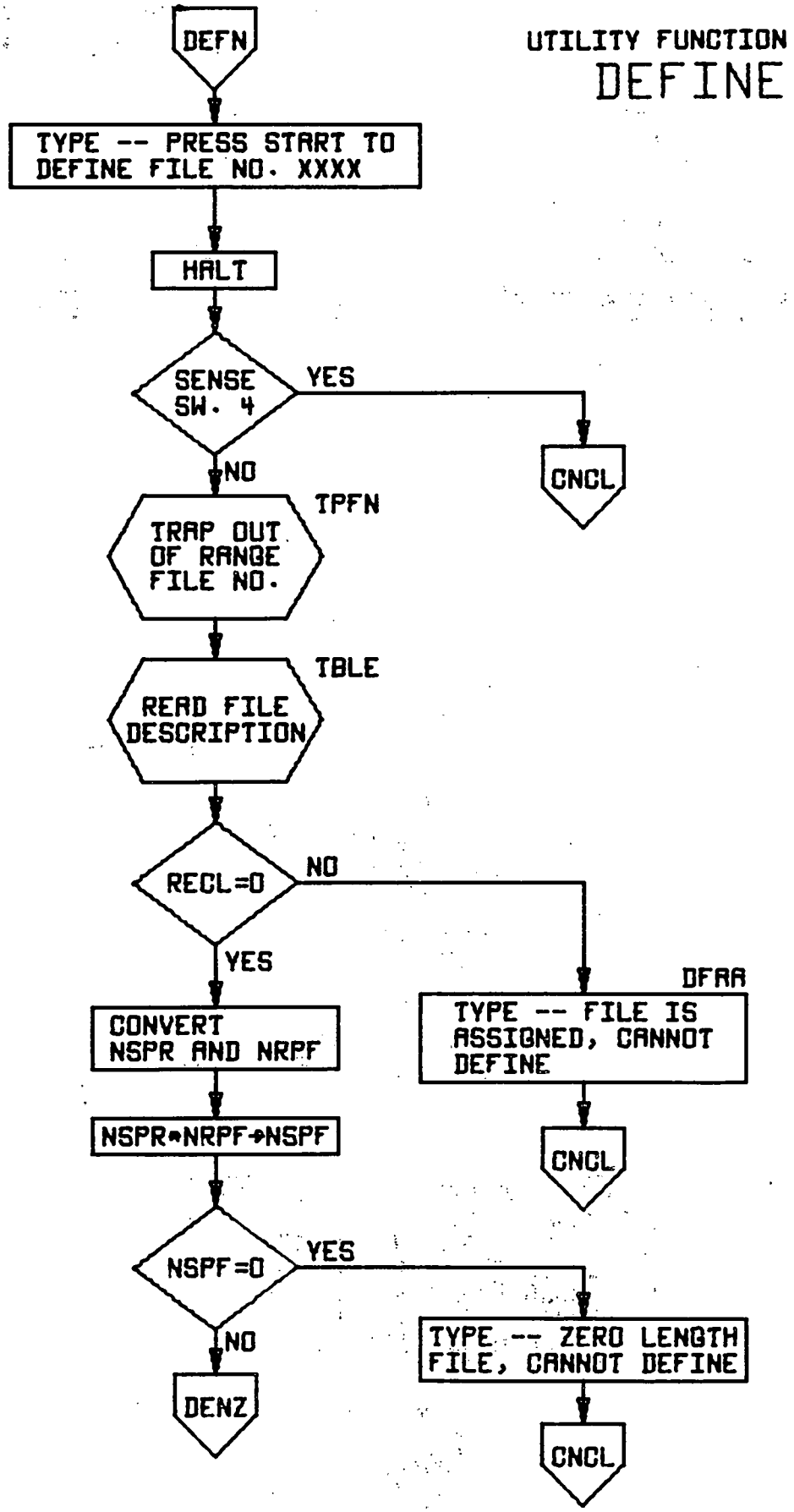

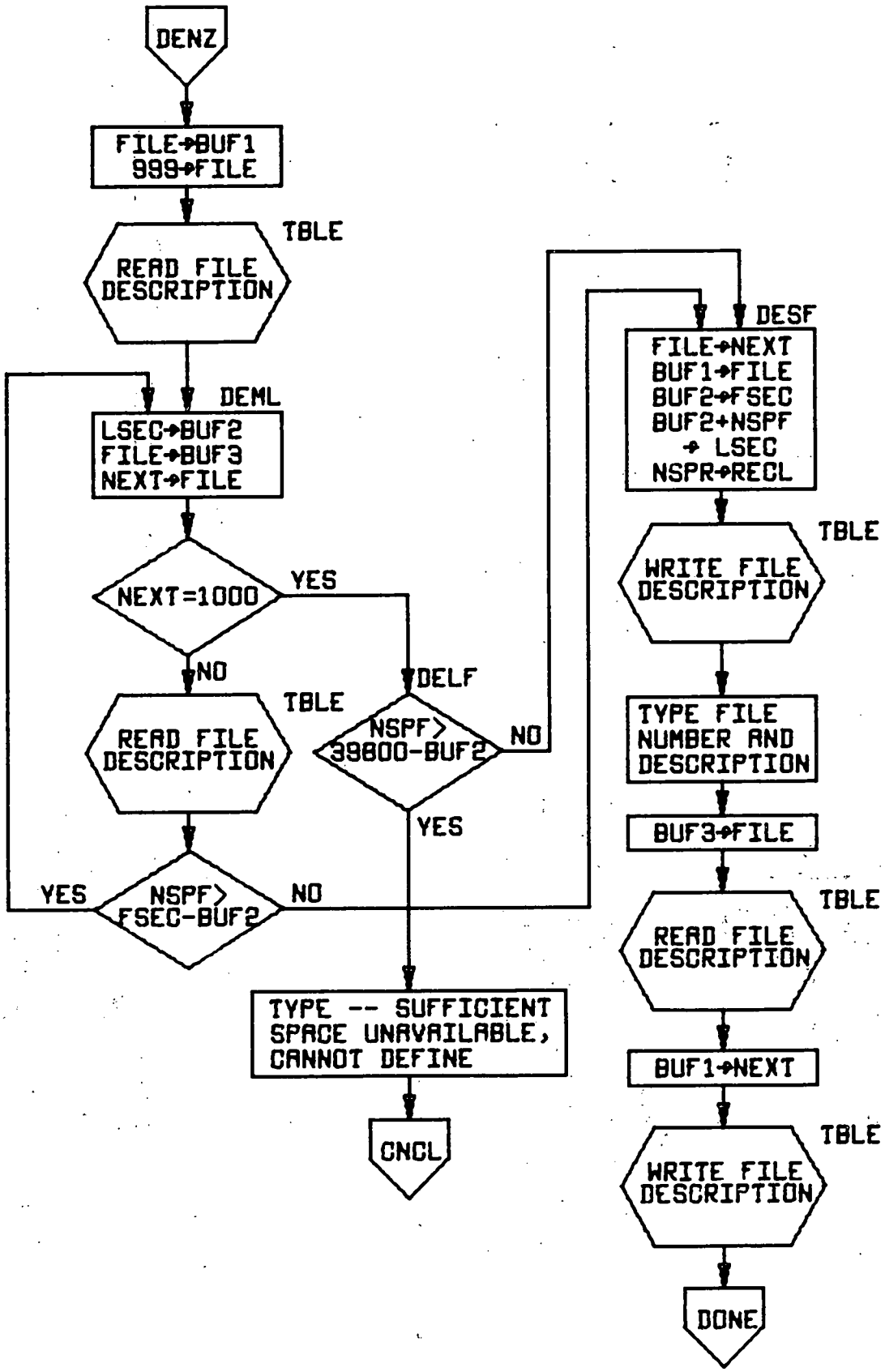
DENZ
FILE→BUF1
999→FILE
TBLE
READ FILE
DESCRIPTION
DEML
LSEC→BUF2
FILE→BUF3
NEXT→FILE
NEXT=1000
YES
NO
DELF
TBLE
READ FILE
DESCRIPTION
NSPF>
39800-BUF2
NO
YES
YES
NSPF>
FSEC-BUF2
NO
TYPE -- SUFFICIENT
SPACE UNAVAILABLE,
CANNOT DEFINE
CNCL
DESF
FILE→NEXT
BUF1→FILE
BUF2→FSEC
BUF2+NSPF
→ LSEC
NSPR→RECL
TBLE
WRITE FILE
DESCRIPTION
TYPE FILE
NUMBER AND
DESCRIPTION
BUF3→FILE
TBLE
READ FILE
DESCRIPTION
BUF1→NEXT
TBLE
WRITE FILE
DESCRIPTION
DONE

UTILITY FUNCTION

DELETE

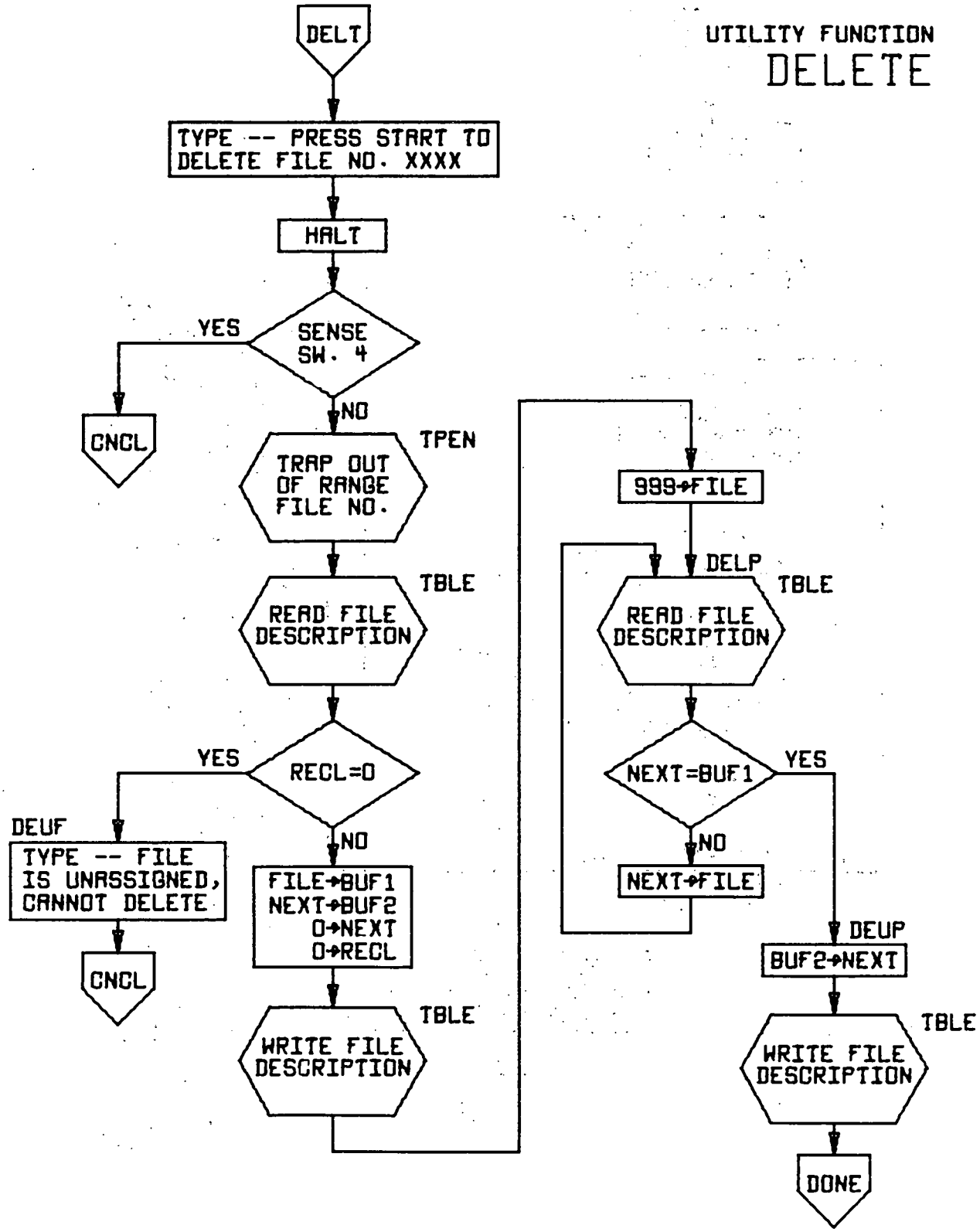

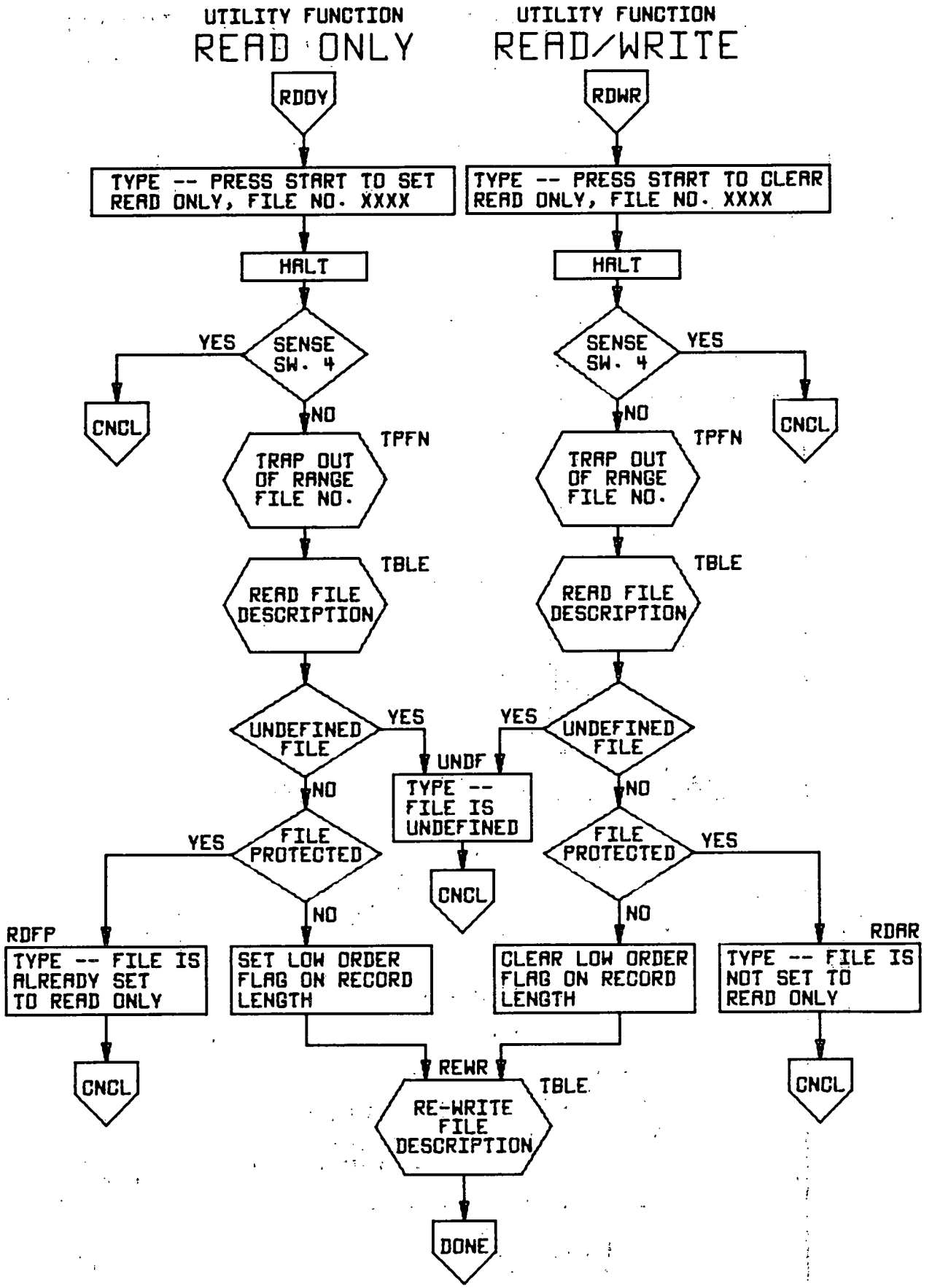
UTILITY FUNCTION
READ ONLY
RDOY
TYPE -- PRESS START TO SET READ ONLY, FILE NO. XXXX
HALT
SENSE SW. 4
YES
CNCL
NO
TPFN
TRAP OUT OF RANGE FILE NO.
TBLE
READ FILE DESCRIPTION
UNDEFINED FILE
YES
UNDF
TYPE -- FILE IS UNDEFINED
CNCL
NO
FILE PROTECTED
YES
RDFP
TYPE -- FILE IS ALREADY SET TO READ ONLY
CNCL
NO
SET LOW ORDER FLAG ON RECORD LENGTH
REWR
TBLE
RE-WRITE FILE DESCRIPTION
DONE
UTILITY FUNCTION
READ/WRITE
RDWR
TYPE -- PRESS START TO CLEAR READ ONLY, FILE NO. XXXX
HALT
SENSE SW. 4
YES
CNCL
NO
TPFN
TRAP OUT OF RANGE FILE NO.
TBLE
READ FILE DESCRIPTION
UNDEFINED FILE
YES
NO
FILE PROTECTED
YES
RDAR
TYPE -- FILE IS NOT SET TO READ ONLY
CNCL
NO
CLEAR LOW ORDER FLAG ON RECORD LENGTH

UTILITY FUNCTION

DUMP TABLE

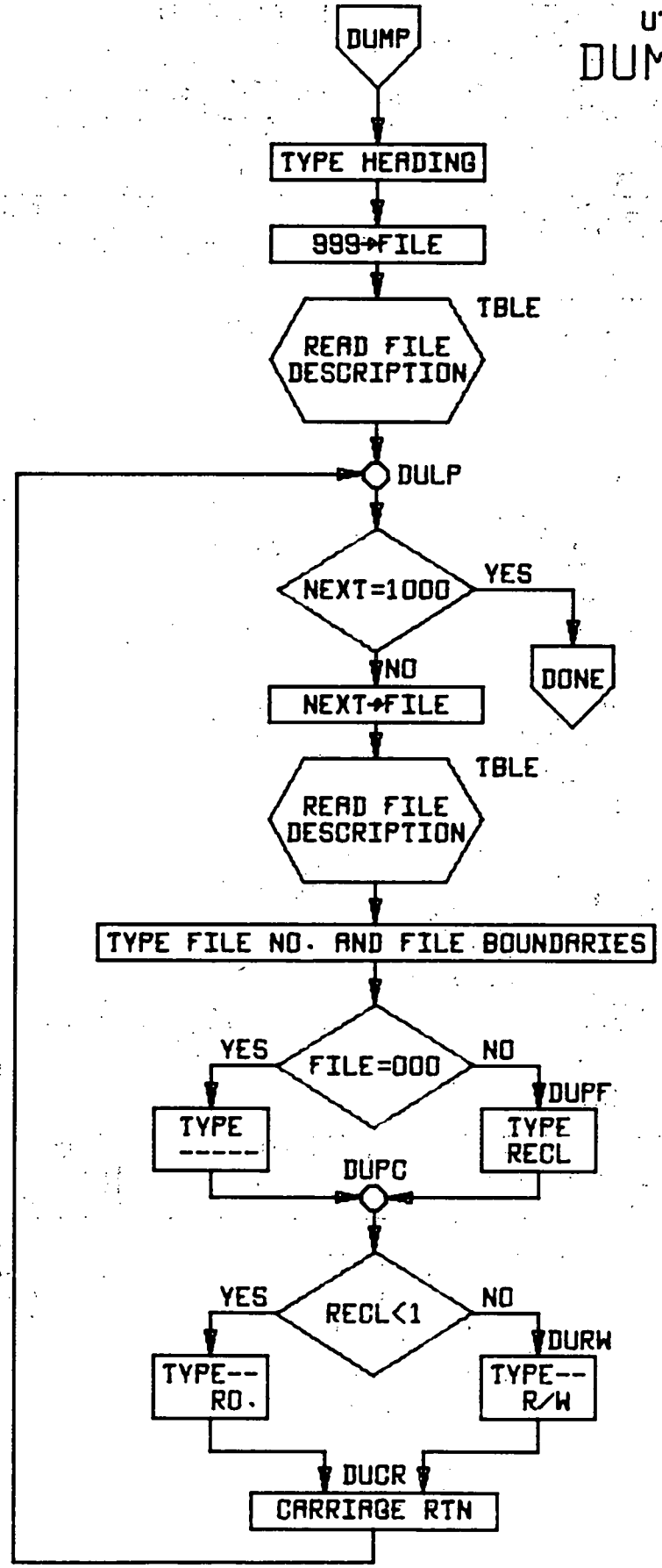

ACKNOWLEDGMENT

I would like to thank Paul Day for suggesting the problem and for the discussions leading to its solution. His assistance in preparing this report is also greatly appreciated.