NO. 2122366
SHEET 0
OF 05.55

DIAGNOSTIC TEST

TITLE DIAGNOSTIC MANUAL DT 0023
MACH.TYPE 1620-1/1311-2 BY _____ APPR. _____ DATE 9-17-64

ENGINEERING CHANGE HISTORY

E/C NO.	DATE	SHEETS AFFECTED
412531	9-17-64	00.01 -05.55

E/C NO.	412531						
DATE	9-17-64						

TABLE OF CONTENTS

PROGRAM DESCRIPTION	00.02 - 00.03
PURPOSE	00.02
PROGRAM REQUIREMENTS	00.02
EQUIPMENT REQUIREMENTS	00.02
GENERAL PROGRAM FLOW	00.03
USE PROCEDURE	01.01 - 01.03
BEFORE RUNNING DT 0023	01.01
CONTROL SWITCH SETTINGS	01.01
PROGRAM LOADING	01.01
OPERATING INSTRUCTIONS	01.01
PRINTOUTS	01.02
DUPLICATE DT 0023	01.02
NORMAL TYPEOUT	01.03
PRINTOUTS - REFERENCE	02.01 - 02.19
PRINTOUTS - ERROR	03.01 - 03.28
PROGRAM FLOW CHARTS	04.00 - 04.43
PROGRAM LISTING	05.00 - 05.55

DT 0023
1620-1/1311-3 DIAGNOSTIC MANUAL

PROGRAM DESCRIPTION

Purpose

DT 0023 is a fault finding program which tests the file beginning with the simplest operations and progressing to the more complex (e.g., Read Sector). This arrangement allows a trouble to appear in the simplest instruction that will fail, thereby simplifying trouble analysis.

This program will not pin point the trouble for the Customer Engineer, rather, it is intended to indicate the Failing Function very rapidly after which the C.E. must rely on his standard "trouble shooting" techniques.

Program Requirements

This test is to be used on the 1620-1/1311-3. Its use on the 1620-II/1311-3 is not recommended.

Equipment Requirements

Some routines make use of jumper wires to allow the 1620 to test large blocks of functional circuitry (e.g., bit ring) independent of the remaining file circuitry. Whenever jumpers are used, be sure to follow instructions implicitly to prevent damage to the machine circuits. If a jumper should be inadvertently installed in the wrong location, write down the erroneous pin location before removing the jumper - this will greatly simplify trouble shooting any resulting circuit damage.

The C.E. disk pack should be used with DT 0023 but any (scratch) pack may be used as long as the addresses are correct and readable.

GENERAL PROGRAM FLOW

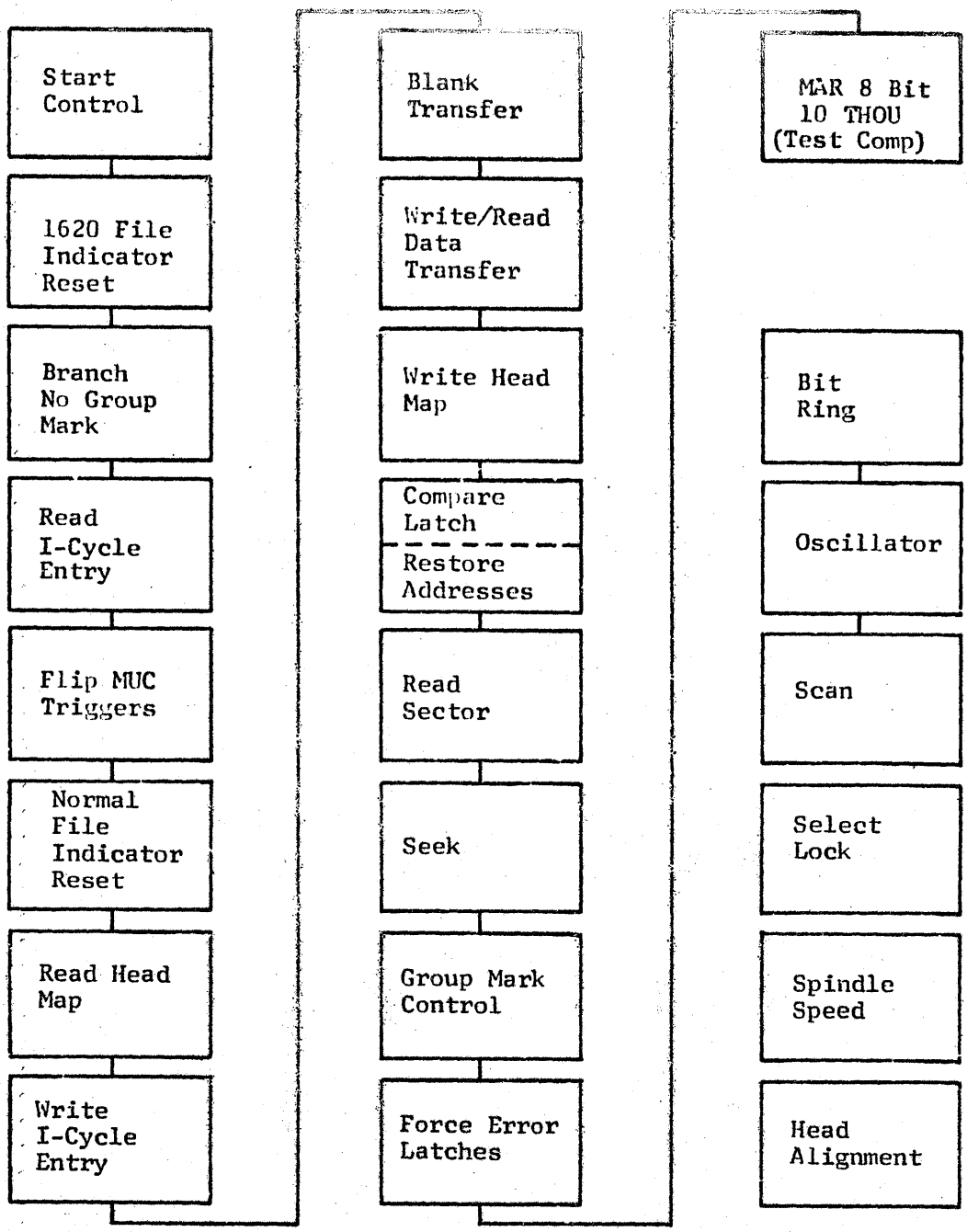

NOTE: See Pages 01.03 and for starting addresses of Routines.

USE PROCEDURE

Before Running DT 0023

1. The 1620-I must be functioning properly.
2. Install C.E. Disk Pack (or scratch pack). Disk Pack must have good addresses.
3. Turn on 1311 start/stop switch.
4. Verify proper initial seek sequence before proceeding.
   a. Carriage seeks to track zero after loading heads.
   b. Ready (green) light turns on.
5. If "a" or "b" above do not function properly, correct before proceeding.

Control Switch Settings

1. Normal program run, turn all switches down ("off" and "Program").
   Alternate sense switch settings:
   a. SS 1 ON By-pass error typeout during diagnostic loops
   b. SS 2 ON Redevelop error
   c. SS 3 ON Loop in core load and suppress normal typeout
   d. SS 4 ON Loop in routine

Program Loading

1. Clear 1620 storage 31 00003 00002
2. Put program deck in card reader and press LOAD key or load paper tape (insert, 36 00000 00300 RS)

Operating Instructions

1. Respond to instructions from typewriter. (Type Module number, RS.)
2. Read and execute instructions in Reference A (Machine hang up conditions).
3. Follow typeout of program sequence. If an error is detected, look up error number or reference number in this manual.
4. If the 1620 fails to start after correct execution of instructions in Reference A, check the following:
   a. Sector cycle on Solid-Logic, 05.07.10.1
   b. File Control cycle on solid - Logic 05.07.20.1
   c. Cyclinder overflow on solid - Logic 05.30.10.1
   d. Address cyclinder check on solid - Logic 05.30.10.1
5. To RESTART PROGRAM, branch to 00500 (either core load 1 or 2).
6. After correcting trouble, ALWAYS RERUN COMPLETE PROGRAM (from step 1, program loading)

Printouts

1. Normal typeout
   The typewriter prints out the address and name of each test routine as it sequences through the program.

   Example
   04506 - BRCH NO GM
   04860 - RD I-CYC ENTRY
   etc.

2. REFERENCE Printouts.

   The typewriter will print out reference statements such as "REF A", "REF B", etc. These references provide additional information required to implement certain test routines. The references are arranged in alphabetic order starting on page 02.01.

3. ERROR Printouts

   The typewriter types error numbers such as "ERR 001", "ERR 102", etc. when the program detects a failing function. Descriptions of error numbers are arranged in order starting on Page 03.01.

   After each ERROR typeout, the machine will halt. Pressing the 1620 "START" key puts the program in a diagnostic loop. Further ERROR typeouts and Halts may be suppressed by turning SW #1 on.

4. DIAGNOSTIC LOOP

   This is a short programmed loop designed to exercise the failing function. It can be used as a scoping loop or to check repair.

Duplicate DT 0023

1. Cards:
   a. Place program deck in card reader and biank cards in punch hopper
   b. Clear 1620 storage
   c. Insert 37 00501 00500
      39 00501 00400
      49 00000 RS

2. Paper Tape
   a. Load program tape onto reader
   b. Insert 36 00000 00300 RS
   c. After program is loaded, branch to 00588.

NORMAL TYPEOUT

```
DIAGNOSTIC TEST 0023
TURN ALL SWITCHES OFF OR TO PROGRAM
KEY IN MODULE NO. PACK IS ON    ONS

03616 - REF  A
04186-1620 FILE IND RESET
04506-BRCH NO GM
04860-RD 1-CYC ENTRY
06304-FLIP MUC TGRS
07238-NORM FILE IND RESET
07666-RD HEAD MAP

PART 2 OF DT 0023
ARE HEADS AT CYL 03,TYPE Y-N  YES
03796 - REF  J
03984-WR 1-CYC ENTRY
04496-BLANK XFER
05502-WR/RD DATA XFER
08740-WR HEAD MAP
09180-COMPARE LATCH
09612-RESTORE ADDRESSES
09960-RD SECTOR
11234 - SEEK
12074-GM CONTROL
12762-FORCE ERR LATCHES
13446-MAR 8 BIT 10K

13666 - REF  M
TEST COMPLETED
```

NOTE: Five Digit number preceeding routine title is the starting address of that routine.

DT 0023
1620-1/1311-3 DIAGNOSTIC MANUAL

INDEX OF REFERENCE TYPEOUTS

REF. CHAR.	
A	02.02
B	02.02
C	02.02
D	02.03 - 02.05
E	02.06
G	02.06 - 02.07
H	02.07
J	02.07
K	02.07
M	02.08
N	02.08 - 02.10
P	02.11 - 02.15
R	02.16 - 02.17
S	02.18
T	02.18
U	02.18
V	02.18
Y	02.19
Z	02.19

REFERENCE A

What To Do When The Machine "Hangs Up"

IMPORTANT: 1. Machine is now in a hang up condition. These hang up conditions may occur during normal operation of the program. It is essential that the following steps be taken.

2. To get out of hang up conditions: Push Reset and Release keys simultanously, then push the start key. The test will proceed.

REFERENCE B

Attach a jumper from A1 D40K to J pin. This will prevent the 1620 clock from stopping on an illegal operation. Press 1620 start key to continue.

REFERENCE C

A select lock occurred which cannot be isolated in core load 2. Read in core load 1 and branch to the Select Lock test (00556).

Note: If Select Lock is on when DI 23 starts execution, ERR 100 will type out.

REFERENCE D

Read Scan - This routine reads a track into core and prints out the First Record. (Set typewriter margin to type 70 characters per line). The File Op. used is a RTN with head 0.

1. Install jumper from A1 F33R to J pin.
   This brings up "Gate A of the I/A record" which causes all data (AGC, address and record) to be transferred to the CPU on a Read Op.

2. Turn switch #1 ON to cause the Read Op. to loop.

3. Press 1620 start key to begin.

4. To type out a data scan, turn switch #1 off momentarily, returning it to the ON position as soon as the typewriter starts.

5. Compare the typeout to the scan typeout model on page 02.05. Mark the location of the first character on the typeout that fails to compare to the model. This will help to identify the matching error typeout.

6. Return to Ref "P" or "N" and proceed.

Scope Simulator

The typewriter may be used in lieu of the scope when using the scan routine. This is done by substituting the signal to be displayed for the standard read data line, thereby converting logic levels into read data, and transferring this information to core.

1. Remove the slip-on terminal at edge connector A1 DO2F and install one end of a long jumper to this pin. Use the other end of this jumper to probe any logic line desired.

2. The scan jumper, A1 F33R to J pin must be on.

3. Press 1620 start key. (1311 start/stop switch should be on).

4. Turn switch #1 off to type out.

5. Note the time base of the display on the prior read data typeout. This is important since some machine failures will change the time base (number of machine cycles) between sector start pulses.

(Continued)

Scope Simulator (Continued)

6. Interpret the voltage levels as follows:

= Voltage + for entire Bit Ring cycle

= Voltage - for entire Bit Ring cycle

anything else = Voltage - for some part of Bit Ring cycle

Example: 7 = Voltage - for 4, 2 & 1 of Bit Ring cycle

(Continued)

REFERENCE D (Continued)

Scan Typeout Model

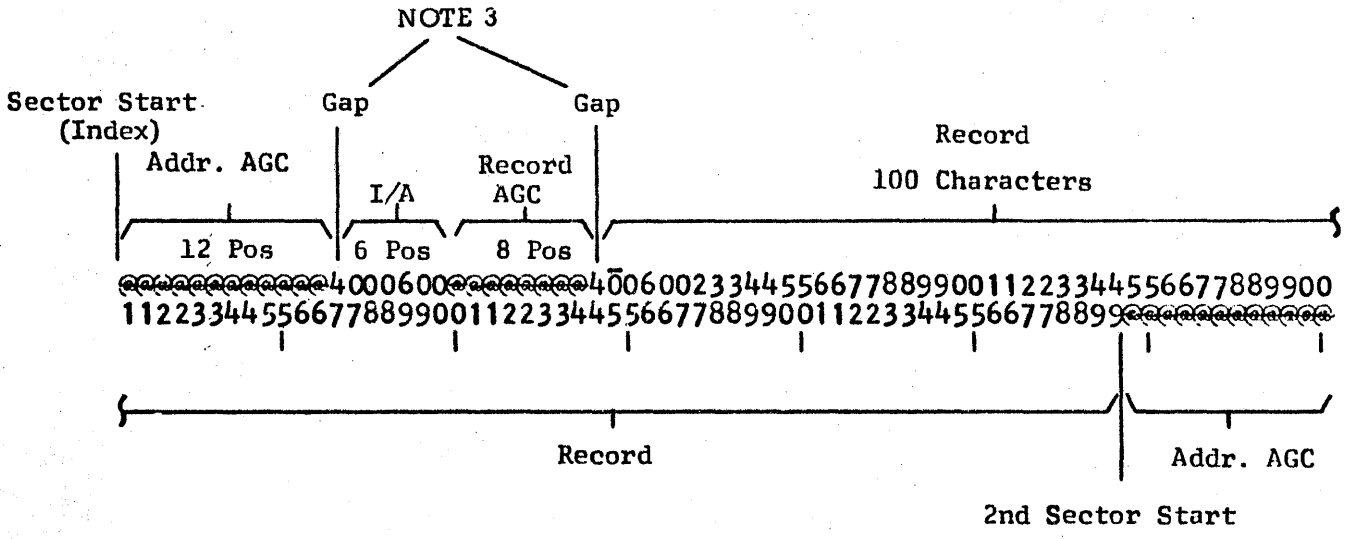

NOTES:

1. The above typeout is a typical example of the information sent to core on a Read Op. with "Gate A of the I/A record" conditioned by means of a jumper.

2. The Read Gate is off during most of the AGC. This blocks read data and results in no bits set into FBR. The read translator decodes "no" bits as 8/4's. Even parity 8/4's typeout as @ (center scored "at signs ").

3. The gaps ordinarily type out as 4's; however, this is not extremely significant. They may type out correctly as any combination of 4, 2 or 1.

4. The I/A and record typeouts both show the actual data written on disk. The I/A in the model shows that cylinder 03 was read.

5. The addr. AGC of the second sector is displayed so that any failure occurring near the end of first sector might be recognized.

DT 0023
PN 2172366
EC 412531

REFERENCE E

Read Head Map

This routine reads full track with addresses from each R/W head at cylinder 03. On each read operation, the first five characters of the read data in core are analyzed and the R/W head number is decoded. This information is then stored in a matrix (Head Map) along with a record of any errors occurring on the data transfer. If no error is detected, a digit representing the R/W head number is stored in the map.

Meaning of the Symbols

— = (Flag) invalid address

@ = no data transferred

‡ = read checks or parities

digit 0 through 9 = Head address actually read

Examples

0123456789 - Normal map

@123456789 - No data XFerred when head 0 tried; all others OK.

01234‡5789 - Parities when head 6 tried; all others OK.

REFERENCE G

To Run The Bit Ring Test

1. Turn off 1311 start/stop switch.
2. Attach the following jumpers:
   a. A1 F09F to B1 D24R (Read Parity to S_1 or S_2).
      logic pages 05.05.22.1 and 05.14.30.1
   b. A1 A15E to B1 E36Q (MQ4 to Bit ring advance)
      logic pages 05.06.10.1 and 05.20.20.1
   c. A1 A15D to B1 E43F (MQ1 to A resets)
      logic pages 05.06.10.1 and 05.32.10.1
3. Press 1620 start key.

(Continued)

REFERENCE G (Continued)

This routine resets the Bit ring to S_2 then proceeds to advance the bit ring until S_1 or S_2 is sensed. The program counts the number of advance pulses sent between S_1 and S_2 bits sensed, to determine where the failure occurred.

Note: Correct operation is indicated if Ref. "Z" types after several seconds.

REFERENCE H

To Run The Read Oscillator Test

1. Turn off the 1311 start/stop switch.

2. Attach a jumper from A1 F09F to B1 B44C. This connects Read Parity to counter 000 - logic pages 05.05.22.1 and 05.15.60.1.

3. Turn on the C.E. clock gate switch.

4. Press 1620 start key.

Adjusting The Oscillator

With the program looping, the osc. repetition rate will type out periodically. Turn the adjusting screw on the SMS card at B1 D20 in very small increments until at least two typeouts indicate that the oscillator is in spec.

Turning the screw clockwise decreases the time interval between oscillator pulses.

For B Suffix 1311s (with two oscillators), after adjusting one oscillator card, exchange the SMS cards at B1 D20 and 19 and repeat the adjustment on the oscillator now located at D20. Both oscillators will then be in adjustment. Turn Switch 2 on to Exit.

REFERENCE J

1. Turn on the Write Address and Compare Disable switches.

2. Press the 1620 start key.

REFERENCE K

You have told the processor that the carriage is not positioned at cylinder 03.

1. Manually operate the detent and move the arm to cylinder 03.

2. Press the 1620 start key.

REFERENCE M

Return the 1311 to customer operating condition.

Make sure:

1. All manual jumpers have been removed.
2. All operating switches are in their normal operating position.
3. Remove the C.E. disk pack.
4. Install machine covers, etc.

REFERENCE N

The file failed to Read (no data transferred) from any head.
(See REF E for detailed explanation of Head Map.)

1. Press 1620 start key.
2. Do Ref. G.
3. If no Error typeout, press 1620 start key.
4. Do Ref. H.
5. If no Error typeouts, press 1620 start key.
6. Do Ref. D.
7. Compare the scan typeout to the error typeouts shown on page 02.09
   Note the number of the typeout which matches or most nearly resembles the typeout given by your machine.
8. Refer to Functional Failures listed by error number on page 02.10

REFERENCE N (Continued)

Scan Error Typeouts

1.

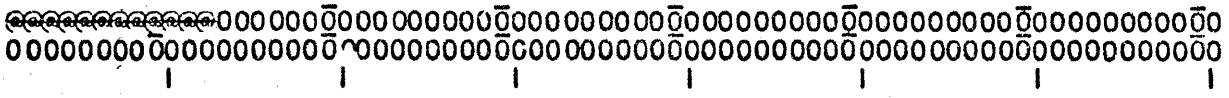

2.

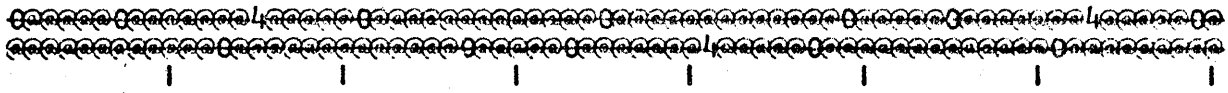

3.

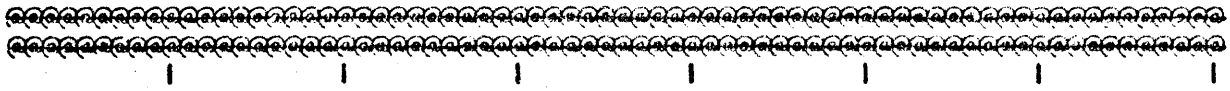

4.

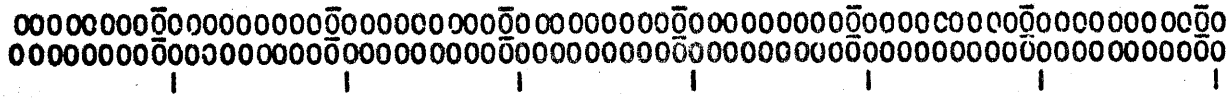

(Continued)

DT 0023
PN 2172366
EC 412531

REFERENCE N (Continued)

Functional Failures (possible causes of Read Scan errors)

1. No data is read from the disk - there is no read amp output. Only the lst AGC appears in the typeout. This is possible because the following are present: AGC gate, clock gate, osc pulses, bit ring pulses, MUC counts, O/E tgr. flips and CPU sync pulses are generated. The lack of any bits in FBR translate as 8/4's and typeout as @'s. Check the following possible causes:
   a. No head selected - 05.25.40.1
   b. No signal gate - 05.22.30.1
   c. No read gate - C2.33.20.1
   d. Open coax or dead read amp. - C2.33.15.1
   e. No gap gate - 05.22.50.1
2. Check for end I/A gate up solid - 05.22.60.1
3. Check for AGC gate up solid - 05.22.10.1
4. No AGC information or data has been transferred. Check for the following failures:
   a. No CPU sync - 05.09.20.1
   b. No read enable - 05.09.10.1
   c. O/E tgr. off solid - 05.08.30.1
   d. No phase A, B or C pulses - 05.14.10.1
   e. No clock gate - 05.22.30.1
   f. No sector start - 05.21.10.1
   g. End of record gate on solid - 05.22.60.1
   h. Group mark or WLR on solid - 05.30.10.1
   i. Functional reset up or down solid - 05.32.20.1
   j. NRF tgr. on solid - 05.21.30.1
   k. Gap gate on solid - 05.22.50.1
   l. Compare latch on solid - 05.21.30.1

REFERENCE P

Parity errors occurred on two or more heads.
(See REF E for detailed explanation of Head Map.)

1. Press 1620 Start key.

2. Do Steps 1 through 6 of Ref D.

3. Compare the scan typeout to the error typeouts shown on Pages 02.12 and 02.13: note the number of the typeout which matches or most nearly resembles the typeout given by your machine.

4. Refer to Functional Failures listed by error number on Pages 02.14 and 02.15.

   NOTE: The scope simulator may be used in lieu of the scope to check the items listed under Functional Failures.

(Continued)

REFERENCE P (Continued)

Scan Error Typeouts

Error No.

1.

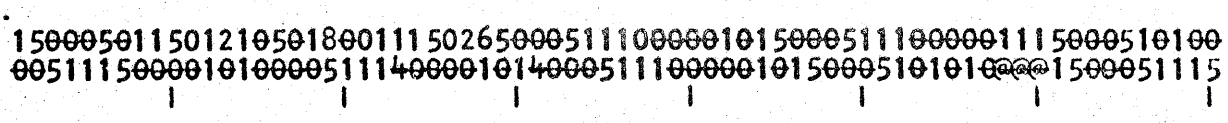

2.

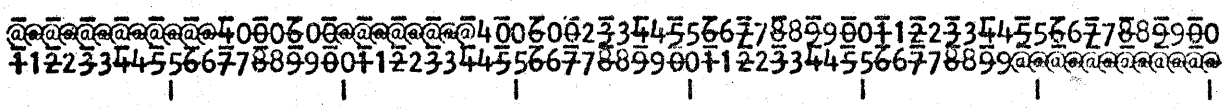

3.

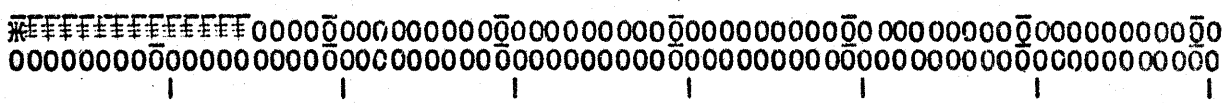

4.

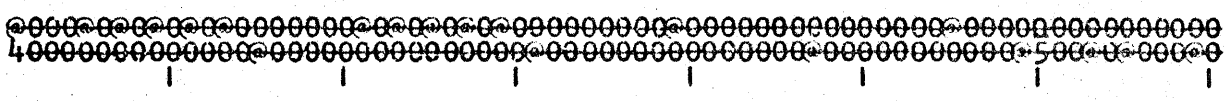

5.

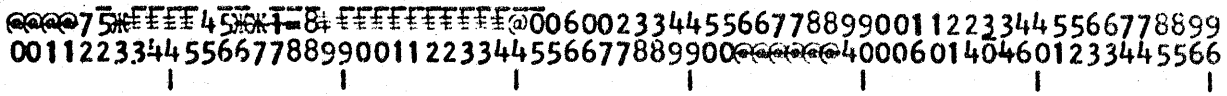

6.

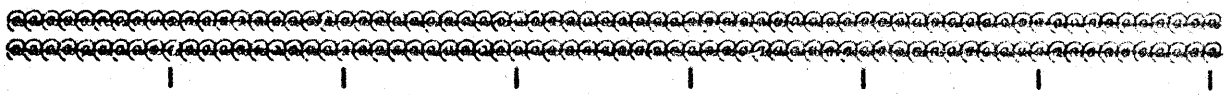

7.

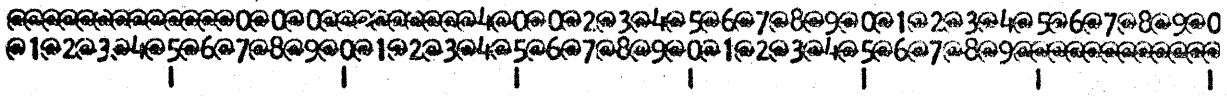

8.

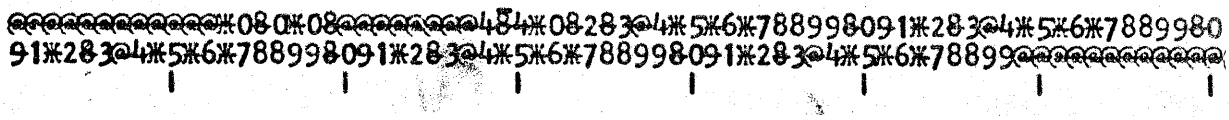

(Continued)

REFERENCE P (Continued)

Scan Error Typeouts

Error No.

9.

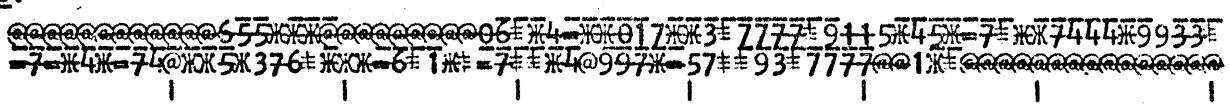

10.

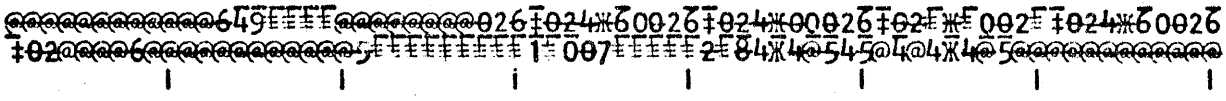

11.

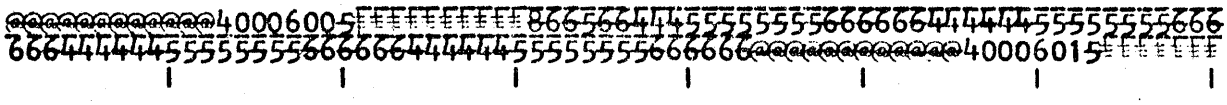

12.

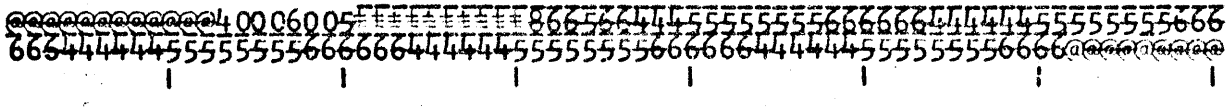

13.

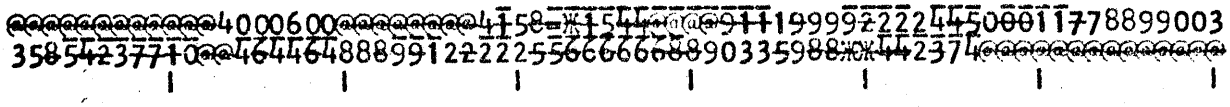

14.

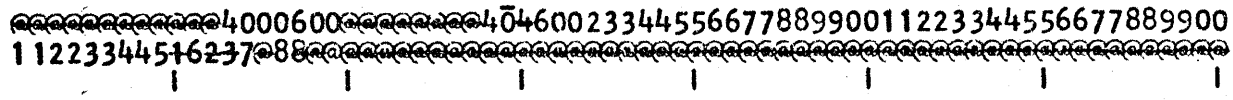

15.

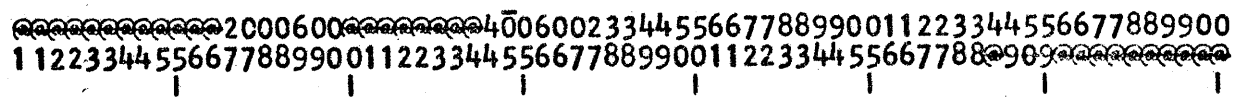

16.

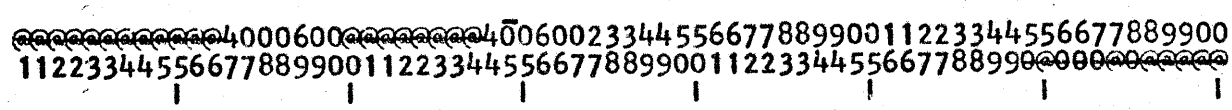

17.

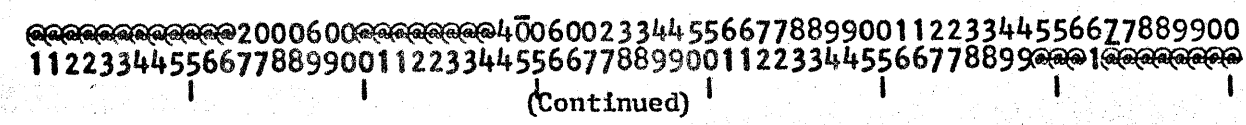

(Continued)

REFERENCE P (Continued)

Functional Failures (possible causes of Read Scan errors)

Check items listed under Error No. corresponding to Error typeout number shown on previous pages.

NOTE: Either Scope or Scope Simulator may be used (See Ref. D).

ERROR NO.	POSSIBLE CAUSE	REFER TO LOGIC PAGE
1.	Check for following error conditions occurring during the record portion of the sector.	
	a. Solid addr. compare gate	- 05.15.70.1
	b. Write strobe on (Bit ring C)	- 05.12.60.1
	c. Counter 003 or 004 gate MAR	- 05.15.60.1
	d. No standard read data	- 05.12.10.1
2.	Even FBR B bit on solid	- 05.12.10.1
	A similar typeout would be given for any bit of either FBR (O/E). Note that extra bit is present even during the AGC's when no read data is gated.	
3.	No AGC gate	- 05.22.10.1
4.	O/E trigger failing to flip	- 05.08.30.1
	a. No O/E tgr. advance	
	b. O/E tgr. on solid	
5.	Address AGC is too short.	
	Set counter 8-10 pulse missing	- 05.15.30.1
6.	a. No standard read data	- 05.12.90.1
	b. Count 000 latch failing to set	- 05.15.40.1

NOTE: If the count 000 latch fails to set, the high order triggers in MUC will turn on erroneously with the set counter to 13 pulse. Since MUC must count down to zero to turn off AGC and turn on the read gate, no data will be read.

7.	No Even Standard read data	- 05.12.90.1
8.	Even Read translator 8 bit up solid	- 05.11.20.1
	Any bit of either translator (O/E) would give similar typeout.	
	NOTE: When 8 or 4 bit is up solid, typeout appears to be normal during AGC. This happens because the failure is masked by the 8/4 bit combination.	

(Continued)

(Continued)

9. AGC disable on solid - 05.22.20.1
NOTE: Read data is scrambled during address and record.

10. One "read bit latch" failing to latch - 02.33.20.1
(This trouble applies only to 1311's with two oscillators.)
Note that failure pattern may be consistent for several characters.

11. Missing address gate - 05.22.10.1
Presence of all bits during record AGC shows that the read gate failed to go off after the I/A. Record gate is coming up early (at beginning of address instead of beginning of record). This also causes end of record to come up early as seen by the location of the AGC for the second sector.

12. a. No end I/A gate - 05.22.60.1
b. No I/A gate - 05.15.70.1
c. Counter 000 latch failing to latch - 05.15.40.1
Presence of all bits during record AGC shows that the read gate failed to go off after the I/A.

13. Oscillator out of adjustment -
Branch to oscillator test routine. (49 00516)
AGC information is correct but record and possibly address data are scrambled. Format is OK.

14. Read bit trigger failing to set - C2.33.20.1
(This trouble applies only to the 1311 with two oscillators.)

15. Functional reset latch failing to latch - 05.32.20.1

16. Trigger 30 set failing to latch - 05.08.10.1

17. a. No record gate - 05.15.70.1
b. No end of record gate - 05.22.60.1
Read data in first sector is correct. Failure occurs during AGC of second sector since record is not terminated properly.

REFERENCE R

To Run Select Lock Test

1. Attach a jumper from A1 C17L to B1 D14C. Leave this jumper on till the end of the test (Ref. M). This connects MAR 8 bit 10 THOU to select lock reset. - logic pages 05.06.30.1 and C2.33.05.1.

(Continued)

Continued (Ref. R)

2. Install "scratch" packs on all modules being tested.

3. Turn on 1311 start/stop switch on all modules being tested.

4. Press 1620 start key.

Interpreting the Module Select Lock Map

This routine checks for a multiple module select condition. The "one" indicates that a Select lock occurred, the "zero" indicates correct operation. The map will consist of from two to four characters depending on the number of modules being tested.

(EXAMPLE)

MAP		PROBLEM
0123 / 1101	(Module No.)	This example indicates that Module 2 is always being selected (erroneously).

Interpreting The Head Select Lock Map

This routine checks for a multiple head select condition or a missing head select. The "one" indicates that select lock occurred, the "zero" indicates correct operation. See examples on following page.

REFERENCE R (Continued)

EXAMPLES

MAP

PROBLEM: Some Head Select Is On Solid.

0	1	2	3	4	5	6	7	8	9	(HEAD POSITION)
0	1	1	1	1	1	1	1	1	1	Y0
1	0	1	1	1	1	1	1	1	1	Y1
1	1	0	1	1	1	1	1	1	1	Y2
1	1	1	0	1	1	1	1	1	1	Y3
1	1	1	1	0	1	1	1	1	1	Y4
1	1	1	1	1	0	1	1	1	1	Y5
1	1	1	1	1	1	0	1	1	1	Y6
1	1	1	1	1	1	1	0	1	1	Y7
1	1	1	1	1	1	1	1	0	1	Y8
1	1	1	1	1	1	1	1	1	0	Y9

PROBLEM: HAR Decode failure; No Input To:

1	0	0	0	0	0	0	0	0	0	- B1C36L, B1D35C or B1C37F
0	1	0	0	0	0	0	0	0	0	- B1D37H, B1C37F or B1 D37A
0	0	1	0	0	0	0	0	0	0	- B1D37F, B1D36F
0	0	0	1	0	0	0	0	0	0	- B1C36D, B1C36H or B1D36A
0	0	0	0	1	0	0	0	0	0	- B1D37C, B1D35F
0	0	0	0	0	1	0	0	0	0	- B1D37B, B1D35L or B1C37D
0	0	0	0	0	0	1	0	0	0	- B1C36Q, B1C37Q or B1D36C
0	0	0	0	0	0	0	1	0	0	- B1C36C, B1D36B
0	0	0	0	0	0	0	0	1	0	- B1 D37Q, B1C37C or B1D36L
0	0	0	0	0	0	0	0	0	1	- B1D35B, B1C37H

See logic 05.25.40.1

REFERENCE S

1. Pull the write-erase safety card at B1 B13.
2. Press the 1620 start key.

REFERENCE T

1. Pull the Read-Write "And" card at B1 C09.
2. Press 1620 start key.

REFERENCE U

1. Replace the R/W "And" card pulled at Ref. T (B1C09).
2. Pull the AC-DC safety card at B1 C06.
3. Stop and start the 1311 to restore the carriage.
4. Press 1620 start key.

REFERENCE V

To Check Spindle Speed

1. Attach the following jumpers:

   a. A1 F09F to B1 B27D (read parity to gated index)
      logic pages 05.05.22.1 and 05.21.10.1

   b. B1 B26A to J pin (gated index every revolution)
      logic page 05.21.10.1

   c. B1 E32Q to J pin (conditions resets)
      logic page 05.32.10.1

2. Press 1620 start key - program will count index pulses for one minute, then typeout the R.P.M.

REFERENCE Y

To Check Head Alignment

1. Install C.E. disk pack.

2. Attach a jumper from B1 A31G to J pin. This blocks the End of Record Gate and prevents an early disconnect from the read operation.
   This step allows for a more stable scope display.

3. Scope the output of the high level amplifier - sync on gated index.

4. Press the 1620 start key - the machine will start reading head 0 on Track 35.

5. Display approximately two sectors (500 us/div).

6. Loosen the clamps and adjust the arm adjusting screw for the selected head until the read envelope shows definite nulls (points of zero amplitude). See the C.E. Reference manual for details.

7. Turn switch #2 on, then immediately back off to select the next lower head in physical sequence: i.e., 0, 3, 4, 7, 8, 1, 2, 5, 6 & 9.

REFERENCE Z

1. Remove all jumpers.

2. Restore all switches to their normal (Read Sector) positions: i.e., Write address and compare disable off, C.E. panel switches off, Start/Stop Switch On.

3. Press the 1620 start key.

INDEX OF ERROR TYPEOUTS

ERROR NUMBERS	ROUTINE	PAGE NUMBERS
010 - 015	BIT RING	03.02
020 - 021	OSCILLATOR	03.03
030	SCAN	03.04
100	CONTROL	03.05
110 - 115	1620 FILE INDICATOR RESET	03.06
120 - 123	BRANCH NO GROUP MARK	03.07
130 - 138	READ I-CYCLE ENTRY	03.08 - 03.09
140 - 147	FLIP MUC TRIGGERS	03.10 - 03.11
150 - 155	NORMAL FILE INDICATOR RESET	03.12
160 - 168	READ HEAD MAP	03.13 - 03.15
170 - 173	SELECT LOCK	03.16
180 - 182	SPINDLE - SPEED	03.17
200 - 204	WRITE I-CYCLE ENTRY	03.18
210 - 214	BLANK TRANSFER	03.19
220	WRITE/READ DATA TRANSFER	03.20 - 03.21
230	WRITE HEAD MAP	03.22
240 - 242	COMPARE LATCH - RESTORE ADDRESSES	03.23
251 - 256	READ SECTOR	03.24
260 - 261	SEEK	03.25
270 - 274	GROUP MARK CONTROL	03.26
280 - 287	FORCE ERROR LATCHES	03.27
290	MAR 8 BIT 10 THOU	03.28

ERROR 010

Bit ring S_2 failed to turn on. It should be turned on by Reset A5. Turn on Switch 1 and push Start Key for two instruction loop which will continue to try to Reset Bit Ring S_2 on for scoping.
See logic 05.20.40.1

ERROR 011

Bit ring S_1, A, S_2 or 1 failed to turn off.
Check for faulty trigger card or missing Adv. 2 pulse.
See Note.
See logic 05.20.40.1

ERROR 012

Bit ring failed to advance correctly. See note.
Compare the number of advance pulses sent (See typeout) to the statements below:

Sent 02 ADV	Bit ring B or 2 failed to turn off.
Sent 03 ADV	Bit ring C or 4 failed to turn off.
Sent 04 ADV	Bit ring W or 8 failed to turn off.

See logic 05.20.40.1

ERROR 013

Bit ring S_1, 8, 4, 2 or 1 failed to turn on. See note.
Check for faulty trigger card or missing Adv. 1 or Adv. 3 pulse.
See logic 05.20.40.1

ERROR 014

S_1 or S_2 failed to turn on after six advance pulses were sent. See note.
Check the output of the bit ring triggers to determine the last trigger set. Faulty circuit should be the last trigger set or the following stage.
See logic 05.20.30.1

ERROR 015

Bit ring W, C, B or A failed to turn on. See note.
Check for faulty trigger card.
See logic 05.20.30.1

NOTE: (Scope Loop) Push Start Key. The Program will go into a loop which resets and sends advance pulses to the Bit Ring.

ERROR 020

Counter Zero is failing to turn on.
See Note below. See Logic 05.15.60.1.
(A misplaced jumper may also cause this error - check jumper location)

ERROR 021

Counter zero is on solid. See note below.
See Logics 05.14.10.1 and C2.33.20.1.

NOTE: (Scope Loop) To Scope, turn on the clock gate switch on the 1311 CE panel. This causes the oscillator, bit ring, and MUC to run. They may now be scoped. The CPU need not be running at this time.

After correcting trouble turn CE clock gate switch off (to reset Bit ring), then back on. Push start key. Turn Switch 2 on to exit from routine.

OSCILLATOR TEST

03.04

ERROR 030

Hang up condition occurred during Read Track operation in the Scan routine.
(Check for proper location of the jumper installed at REF D.)

As long as error is present (Failure to get file exit) the machine will stay in a loop. The error typeout can be suppressed by turning on Switch 1, however, because of the type of error, the CE must press Reset and Release Simultaneously each time he wishes to execute the loop. See ILD 04.02

ERROR 100*

An illegal operation failed to stop the 1620 clock. The instruction, 36 PPPPP 00708 (MQ = 8), should stop the clock causing a program hang up condition.

See logic 05.06.10.1

Turn on Switch 1 and press Start Key. The Program is now in a two instruction diagnostic loop. Scope the failing circuit.

* NOTE: If Select Lock Light is on at this time, insert and branch to select Lock Test.
(49 00556)

ERROR 110

Address check indicator (36) failed to reset. See Note below.
See logic 01.25.17.1

ERROR 111

Wrong length Record/Read back check indicator (37) failed to reset.
See Note Below.
See logic 01.25.17.1

ERROR 112

Cylinder overflow indicator (38) failed to reset. See Note Below.
See logic 01.25.17.1

ERROR 113

Any Disk Check indicator (39) failed to reset. See Note below.
See Logic 01.05.17.1

ERROR 114

Read check indicator (06) failed to reset. See Note Below.
See logic 01.81.45.1 and 04.30.30.1

ERROR 115

Write check indicator (07) failed to reset. See Note below.
See logics 01.81.45.1 and 05.30.30.1

NOTE: One or more Error Typeouts have occurred. Turn Switch 1 on. Push Start Key. The Program will go into a Diagnostic Loop attempting to reset all of the above indicators. Scope the failing circuit. After correcting trouble turn Switch 2 on to exit from loop. Push start key to continue.

ERROR 120

CPU erroneously branched on a group Mark. See Note Below.
See logic 01.63.50.1

ERROR 121

CPU failed to branch on a zero. See Note Below.
See logic 01.63.50.1

ERROR 122

CPU failed to branch on a seven. See Note Below.
See logic 01.63.50.1

ERROR 123

CPU failed to branch on a Record Mark. See Note Below.
See logic 01.63.50.1

NOTE: One or more error typeouts have occured. Turn Switch 1 on. Push Start Key. The Program will go into a Diagnostic Loop to INTERROGATE the above indicators. Scope the failing circuit.

ERROR 130

Hang up condition occurred during File Control cycles. The operation being executed is an Illegal Op. which should cause an exit (to I-cycles). The program will remain in a loop to allow Single Cycling through File Load Cycles. See Note on following page.

Check for -S File Exit
See logic 05.07.30.1 and ILD pages 04.01 & 04.02.

ERROR 131

1620 clock is being stopped erroneously. Check for -S Clock Stop (should be plus). See Note on following page.
See logic 05.06.10.1

ERROR 132

Hang up condition occurred during File Control Cycle of a Read operation with a sector count of 000. Switch thousand and Sector test gate should turn on File Exit latch. Program will remain in a diagnostic loop. See Note on following page.

Check for +Y FC File Exit
See logic 05.07.20.1 and ILD page 04.02

ERROR 133

Machine failed to exit from a Seek (to cycle 03) operation. Program will remain in a diagnostic loop. See Note on following page.

Check for missing -Y Promised Exit
See logic 05.07.30.1

ERROR 134

The carriage went to positive stop on a Seek to cylinder 00. See Note on following page.
Check for following failures:
1. -Y counter 000 off solid -05.15.60.1
2. One or more MUC triggers on solid -05.15.40.1
After correcting trouble push 1311 start/stop to restore carriage.

ERROR 135

Busy latch failing to reset. Reset normally occurs when +S 15 MS goes plus after the detent seats. See Note on following page.
Check for down level on +Y File Not Ready
See logic 05.06.10.1

ERROR 136

Carriage will not seek past cyclinder 00. Program attempted a seek to cylinder 03. See Note. Check for -Y counter 000 on solid.

See logic 05.15.60.1

ERROR 137

Machine failed to turn on Exit latch on an Address Check. See Note.

See logic 05.07.30.1

Check following possible causes:

1. No gated sector.
2. No gated index.
3. NRF tgr. fails to set.
4. No Addr. Cyl. check.
5. File reset up solid.
6. No selected pre-sector or sector.

ERROR 138

Machine failed to turn on Exit latch on a Read track operation. See Note.

Check for missing -S End track

See logic 05.30.10.1

NOTE: (Scope Loop)

Turn on Switch 1. Push Start Key. (If Ref Z types, remove jumpers that were installed and push start key again.) You have entered a two instruction routine which follows each of the above errors. It is built into the program to allow the repeating of the failing instruction. Because all of the errors on this and the preceeding page are Hang Up Type Errors, it will be necessary to push the Reset and Release keys simultanously, then the start or single cycle key to repeat this routine. After correcting trouble turn switch 2 on to exit from routine. Push start key to continue.

ERROR 140

The carriage went to positive stop on a Seek to cylinder 01.
See Note on following page.
Check for the following failures:

1. MUC 1-2 trigger failed to turn off (AC reset). -05.15.40.1
2. The set gate failed to come up.
3. No count track pulses.
4. Busy latch failed to set. -C2.23.02.1

ERROR 141

The carriage went to positive stop on a Seek to cylinder 02. See Note on following page. Check for MUC 2-4 trigger failure to turn off when MUC 1-2 turned on (AC inputs).
See logic 05.15.40.1

ERROR 142

The carriage went to positive stop on a Seek to cylinder 04. See Note on following page.
Check for the following failures:

1. MUC 4-8 trigger failed to turn off when MUC 2-4 turned on (AC inputs).
2. Set gate up solid.
3. Count 000 latch failed to reset.
See logic 05.15.40.1

ERROR 143

The carriage went to positive stop on a Seek to cylinder 05. See Note on following page. Check for MUC 8-10 trigger failure to turn off when MUC 4-8 turned on (AC inputs).
See logic 05.15.40.1

ERROR 144

The carriage went to positive stop on a Seek to cylinder 10. See Note on following page. Check for MUC 16-20 trigger failure to turn off when MUC 8-10 turned on (AC inputs).
See logic 05.15.40.1

ERROR 145

The carriage went to positive stop on a Seek to cylinder 20. See Note. Check for MUC 32-40 trigger failure to turn off when MUC 16-20 turned on (AC inputs).
See logic 05.15.40.1

ERROR 146

The carriage went to positive stop on a Seek to cylinder 40. See Note. Check for MUC 64-80 trigger failure to turn off when MUC 32-40 turned on (AC inputs).
See logic 05.15.40.1

ERROR 147

The carriage went to positive stop on a Seek to cylinder 50. See Note. Check for MUC 128-100 failure to turn off when MUC 64-80 turned on (AC inputs).
See page 05.15.40.1

NOTE: (Scope Loop) A Two instruction Routine following each of the errors on this and the preceeding page is built into the program to allow repeating the failing instruction. Push the start key to enter this Routine. Because all of the above errors are hang up type errors, it will be necessary to push the reset and release keys simultanously, then the start or single cycle key to repeat this routine. Turn on Switch 2 to Redevelop error. After correcting trouble push 1311 start/stop to restore the carriage. Push start key to continue.

ERROR 150

Address check reset failed (Read track Op). See Note.
Check for track gate latch failing to turn on or missing track start pulse.
See logic 05.30.20.1

ERROR 151

Overflow check reset failed (track Op.). See Note.
See logic 05.30.20.1

ERROR 152

WLR/RBC reset failed (track Op.). See note.
See logic 05.30.20.1

ERROR 153

Address check reset failed (Sector Op). See Note.
See logic 05.30.20.1

ERROR 154

Overflow check reset failed (Sector Op). See Note.
See logic 05.30.20.1

ERROR 155

WLR/RBC reset failed (Sector Op). See Note.
See logic 05.30.20.1

NOTE: (Scope Loop) Turn Switch 1 on and push Start Key for two instruction Scope Loop.

ERROR 160

The file failed to read good data from any head. The Head Map shows that 2 or more of the 10 R/W heads failed to transfer any data and the remaining heads had parities. Turn Switch 1 on and push start key for Scope Loop.
Check for the following error conditions:

1. Read oscillator running continuously -C2.33.20.1
2. I/A record gate on solid -05.22.50.1

If failure is neither of the above items Branch to REF D.
See REF E for detailed explanation of Head Map.

ERROR 161

Miscellaneous read failure pattern. Push start key. If this error types again start test over. Failure should fall out under different error number with high probability.

ERROR 162

The Head Map shows that 2 or more of the 10 R/W heads failed to transfer any data and the remaining heads read good data (no parities). This indicates a Head Address Register failure. Compare the Head Map typed out to the statements below:

	HEAD MAP	CIRCUIT FAILURE
1.	0@2245@779	Solid HAR Not 2 Bit
2.	@323@@878@	Solid HAR 4 Bit
3.	10@1456@69	Solid HAR Not 4 Bit
4.	00@@455@@9	Solid HAR 8 Bit
5.	0123@5678@	Solid HAR Not 8 Bit

See logic pages 05.25.30.1, 05.25.40.1 and ILD pages 06.03 and 06.04.
Push Start Key. The typewriter will ask to loop on a single head or all heads. Turn Switch 1 on. Insert the desired head selection character. Type RS. Scope the failing circuit. If Switch 1 is off the typewriter will type the address and first part of the data read. Turn Switch 2 on to exit from loop.
See REF E for detailed explanation of Head Map.

ERROR 163

File failed to read correctly (parity) from one head. All other heads read correctly. Branch back to beginning of test (00500). If trouble appears solid, bring in the second core load (Branch to 00532). (This will rewrite the addresses and data on Track 3.)

(Continued)

ERROR 163 (Continued)

After test is completed, retain the [illegible] test over. If trouble fails to appear, suspect bad data on the pack (cause unknown); if trouble persists, the disk pack may be damaged - change disk packs.
If DT 0023 has never been run on this pack, errors may occur on the first pass of the diagnostic - possible cause - bad data on cylinder 03.

ERROR 164

File failed to read sequentially from heads 9-0.
Head Addr. Register (HAR) or HAR decoding circuit is failing.
Compare the Head map typeout with the failure maps shown below.

EXAMPLE:	HEAD MAPS	CIRCUIT FAILURE
1.	5678956789	Solid HAR 1 Bit
2.	0123401234	Solid HAR Not 1 Bit
3.	0133056885	Solid HAR 2 Bit

Push Start key. The typewriter will ask to loop on a single head or all heads. Turn switch 1 on. Insert the desired head selection character. Type RS. Scope failing circuit. If switch 1 is not turned on, the typewriter will type the address and the first part of the data read. Turn Switch 2 on to Exit from loop.
See logic pages 05.25.30.1, 05.25.40.1 and ILD pages 06.03 and 06.04.
See REF E for detailed explanation of Head Map.

ERROR 165

File failed to Read (transfer any data) from one head - all others OK.
The Head map typeout indicates the failing head position with an @.
Press 1620 start key to put program into a diagnostic loop which will select and read from the failing head. Turn Switch 2 on to exit from loop.
See REF E for detailed explanation of Head map.

ERROR 166

R/W heads failed to load to the disk surface 15 sec. after the 1311 start/stop switch was turned on. This normally takes place during the power-on seek.
Possible cause: Latch magnet not energized or excessive "slop" in the head loading linkage.
See logic C2.13.10.1

ERROR 167

The carriage failed to Seek to cylinder 03. Turn on Switch 1 and push start key for scope loop.
Check following possible causes:

1.	No Set counter 1-2 or 2-4 pulse	-05.15.30.1
2.	No gate MAR to MUC	-05.15.10.1
3.	No home Seek gate	-05.07.20.1

ERROR 168

The machine is unable to decode the address read from disk. This is probably caused by incorrect read format.

Press start key. The typewriter will ask to loop on a single head or all heads. Insert the desired head selection character. Type Rs. If Switch 1 is off, the typewriter will output the first part of the data read; If Switch 1 is on, error typeouts are bypassed. Scope the failing circuit.

EXAMPLE HEAD MAP	CIRCUIT FAILURE
3333333333	Missing Set Counter 4-8 pulse (logic 05.15.30.1)

See Ref E for detailed explanation of head map.

ERROR 170

Write Erase circuit turned on Select Lock. Replace the card pulled at B1B13. Scope as noted below.

ERROR 171

Read and Write gate "And" turned on Select Lock. Replace the card pulled at B1C09. Scope as noted below.

ERROR 172

AC-DC Safety circuit turned on Select Lock. Replace the card pulled at B1C06 and scope the failing circuit in the DC (CPU not running) condition. After correcting trouble, push start key to continue.

ERROR 173

Multiple Modules Selected turned on Select Lock. Refer to Module Select Lock map at Ref R.

NOTE: (Scoping loop)

1. First core load: no scoping loop is provided. Scope the failing circuit in the DC condition. After correcting trouble, push start key to continue.
2. Second core load: push start key for scoping loop. After correcting trouble, turn switch 2 on to exit from loop.

ERROR 180

Index is failing to come up.

See logic 05.21.10.1
Check jumper location. (A misplaced jumper will also cause this error)

ERROR 181

Disk array is running too slow. Check for bad spindle bearings, slipping belt or dragging brake. Check frequency of the input power. Note that motor may be 50 or 60 cycle - be sure that proper pulley is used for the input frequency.

ERROR 182

Disk array is running too fast. Check frequency of input power. Note that motor may be 50 or 60 cycle - be sure that proper pulley is used for the input frequency.

ERROR 200

Machine failed to Exit from a Write sector operation (Sector count = 000.) See Note.
See logic 05.07.30.1 and ILD page 04.02

ERROR 201

Machine failed to Exit from a Write Op. with an Address Check. See Note.
See logic 05.07.30.1 and ILD page 04.02.

ERROR 202

Machine failed to Exit from a Write track Op. See Note.
See logic 05.07.30.1 and ILD page 04.02

ERROR 203

Machine failed to Exit from a RBC full track Op. See Note.
See logic 05.07.30.1 and ILD page 04.02

ERROR 204

Machine failed to Exit from a Read Full track Op. with WLR checking. See Note.
See logic 05.07.30.1 and ILD page 04.02

NOTE: (Diagnostic Loop) A two instruction routine following each of the above errors is built into the program to allow repeating the failing instruction. Push the start key to enter this routine. Because all of the above errors are hang up type errors, it will be necessary to push the Reset and Release keys simultanously, then the Start or Single cycle key to repeat this loop. To redevelop error, turn on Switch 2.

ERROR 210

One or more bit lines in the write translator is up erroneously. The CPU attempted to write only the S_1 and S_2 on disk by sending 8/4 bits (@) to the file. This combination is blocked by the write translator and normally sets no bits in FBR. Any bit erroneously set into FBR will be written on disk (possibly, along with the 8/4 bits should this combination fail to be blocked). Note, on the Read Op. the no bit combination from disk is converted back to an 8/4 (@) by the Read translator.

If the read field consists of variable, valid data, then the write operation must have failed to write on disk.

The typewriter will ask for a character which will be written on disk and read back to assist in diagnosing the failure. To isolate the trouble, analyze the bit configuration of the read field typed out.

For a Scope Loop:

1. Turn on Switch 1.
2. Type digit which the program will attempt to write and read.
3. Type RS.
4. To type in new digit, turn Switch 1 off.
5. To exit from routine turn Switch 2 on. Type RS.

See logic 05.11.10.1

ERROR 211

Writing even parity failed to turn-on Write Parity check. Turn on Switch #1 to enter write loop. Push start key.

See logic 05.30.30.1

ERROR 212

Reading even parity failed to turn on Read Parity check. Turn on Switch #1 to enter read loop. Push start key.

See logic 05.30.30.1

ERROR 213

Even serial FBR data picked up a bit writing blanks (S_1 & S_2) on disk. Error bit is typed out. Typewriter will call for a test digit to help diagnose the trouble. For scope loop turn on Switch 1, enter Digit, RS. The program will attempt to write then read that digit. To enter new digit, turn off Switch 1. To exit from routine turn Switch 2 on.

See logic 05.12.80.1

ERROR 214

Odd serial FBR data picked up a bit while writing blanks (S_1 & S_2) on disk. Error bit is typed out. Typewriter will call for a test digit to help diagnose the trouble. For scope loop turn on Switch 1, enter Digit, RS. The program will attempt to write then read that digit. To enter new digit, turn off Switch 1. To exit from routine turn Switch 2 on. Type RS.

See logic 05.12.80.1

ERROR 220

An error occurred during write data transfer. The matrix typeout (See example below) summarizes the errors occurring during a Write track, Read track, and Compare loop. This routine writes nine 2100 character records; each record consisting of one of the characters shown in line 1 below. The data is read back and compared to write data.

Wr/Rd Data Transfer
(Error Matrix)

EXAMPLE

```
    12480‡‡@‡     Line 1 = data written and read
W 000000000       Line 2 = summary of write checks (W)
E 011111001       Line 3 = summary of Even Parities (MBR E)
O 011111001       Line 4 = summary of Odd Parities (MBR O)
R 011111011       Line 5 = summary of Read checks (R)
X 022221111       Line 6 = summary of Compares (X)
```

Errors when data = ‡
Errors when data = 0
Errors when data = 1

Legend:
0 = Correct Operation
1 = A check, parity, or unequal compare in CPU.
2 = Compare operation omitted.

After typing out the error matrix, the typewriter asks for a test digit. Key in one digit and press the release/start key. The machine will now generate a 2100 character record from the digit keyed in, Write track and Read track (Hd.O). The first part of the data is then typed out(See example below) to assist in diagnosing the problem.

EXAMPLE

```
KEY IN WR-RD DIGIT     1RS
08252 EVEN ODD RD CK WTN  11  RTN  1111188888888888888888888888888888888888
8
KEY IN WR-RD DIGIT     2RS
08252 EVEN ODD RD CK WTN  22  RTN  22222444444444444444444444444444444444444
4
KEY IN WR-RD DIGIT     4RS
08252 EVEN ODD RD CK WTN  44  RTN  44444888888888888888888888888888888888888
8
KEY IN WR-RD DIGIT     8 RS
08252 EVEN ODD RD CK WTN  88  RTN  88888444444444444444444444444444444444444
4
```

(Continued)

ERROR 220 (Continued)

In this example 4 different test digits were keyed in (one at a time), 1, 2, 4 and 8. The output shows that only the first five characters of each record were written and read back correctly; this corresponds to the five characters placed in the address location. The failure seen here apparently is caused by losing format control after the I/A, thus the record (and record AGC) are incorrect. If your typeout matches this example, check for a missing "set counter 16-20" pulse.

Scope Loop:

1. Turn on Switch 1.
2. Type digit which program will attempt to write then read.
3. Type RS.
4. To enter new digit, turn switch 1 off.
5. To exit from this loop turn switch 2 on.

See logic 05.15.30.1

Character Coding:

1620 → Write Xlator → 1311 → Read Xlator → 1620

C	C82	C
F	B82	F
C82 (‡)	A82	C82 (‡)
F82 (‡)	CBA82	F82 (‡)
C84	C	C84
F84	B	F84

03.22

ERROR 230

One or more heads failed to write correctly.

Scope Loop:
1. Turn on Switch 1.
2. Push Start Key.

See logic C2.30.05.1

ERROR 240

Read Back Check indicator was turned on but compare data was equal (Rd/Wr data compared equal in 1620 core in the data transfer routine).
Check for compare latch failing to set or failure of 1311 compare "And" circuits. See Note
See logic 05.21.30.1

ERROR 241

WLR/RBC indicator (37) failed to turn on with either a Wrong Length Record or Read Back Check error.
Check for a solid WLR/RBC reset. See note.
See logic 05.30.20

ERROR 242

RBC indicator (37) failed to turn on in a Read Back Check operation with unequal data. See Note.
See logic 05.21.30.1

Also, the RBC Op. may be terminating too early (before any unequal data is compared).
Check for a missing pulse, set counter 64-80.
See logic 05.15.30.1

NOTE: (Scope Loop)
1. Turn on Switch 1.
2. Push Start Key.

ERROR 251

Address check occurred on a one sector Read Op. See Note.

Check the following possible causes:	See logic:
1. No counter 000 through 004 gate MAR	-05.15.60.1
2. I/A gate failing to turn off	-05.15.70.1
3. No compare sample gate	-05.21.30.1
4. I/A skip check latch ON solid	-05.21.30.1

ERROR 252

Failed to transfer one complete record (100 characters) on a Sector Read Op. (Data is located at 15000 in core). The operation may be terminating early because counter 000 comes up too soon during the record. Check for missing pulse on "set counter 32-40" or "set counter 64-80". See Note.

See logic 05.15.30.1

Also check for transferring more than one sector.

ERROR 253

File encountered an incorrect address on a Sector Read Op., but failed to give a "No address compare" error. See Note.

See logic 05.21.30.1

ERROR 254

Address check occurred in a 21 sector Read operation. Scope output of high level amplifier. See Note.

See logic C2.33.20.1

ERROR 255

Failed to transfer 21 complete records on a 21 sector Read Operation. Scope output of high level amplifier. See Note.

See logic C2.33.20.1

ERROR 256

Address compare occurred in a 21 sector Read operation. Addresses should be 00600 through 00621. Scope output of high level amplifier. See Note.

See logic C2.33.20.1

NOTE: (Scope Loop)
1. Turn on Switch 1.
2. Push Start Key.

DT 0023
PN 2172366
EC 412531

ERROR 260

Carriage failed to detent on a Seek operation. Press 1311 Start/Stop to reset the carriage. Press Start to redevelop error. Scope the failing circuit.

ERROR 261

Check to see if the carriage is at cylinder 010. If it is, this indicates that the CPU cannot indirect address the P- field of a Seek instruction; if it is not, the carriage failed to seek correctly. (The program checks the CPU for indirect addressing and will not use the feature if it is not installed.)

ERROR 262

The carriage failed to seek to the correct cylinder. The typeout indicates the cylinder used in the Disk Control Field as well as the cylinder (decoded) where the carriage actually detented. Push start key to redevelop error.

ERROR 270

Group Mark latch failed to turn on with an even group mark read from disk. See Note.
See logic 05.30.10.1

ERROR 271

Group mark latch failed to turn on with an odd group mark read from disk. See Note.
See logic 05.30.10.1

ERROR 272

End of Record Group Mark failed to come on. See Note.
See logic 05.30.10.1

ERROR 273

WLR/RBC reset failed with late cycle Group mark (Sector Op. with WLR check). Check for solid EOR group mark. See Note.
See logic 05.30.20.1

ERROR 274

WLR/RBC reset failed (RBC Op. with correct data). See Note.
See logic 05.30.20.1

NOTE: (Scope Loop)
1. Turn on Switch 1.
2. Push Start Key.
3. Switch 2 on redevelopes error.

ERROR 280

Address check failed to turn on with sector address = [illegible]
(cylinder 03). Check for solid Address Check reset. See Note.
See logic 05.30.10.1

ERROR 281

Address check failed to turn on the Any Disk Check indicator (39).
See Note. See logic 01.05.17.1

ERROR 282

Overflow indicator (38) failed to turn on. Check for erroneous
cylinder overflow reset. See Note.
See logic 05.30.10.1

ERROR 283

Overflow check failed to turn on the Any Disk Check indicator (39).
See Note.
See logic 01.25.17.1

ERROR 284

WLR/RBC indicator (37) failed to turn on.
See Note.
See logic 05.30.10.1

ERROR 285

WLR/RBC failed to turn on the Any Disk Check indicator (39).
See Note.
See logic 01.25.17.1

ERROR 286

WLR/RBC indicator (37) failed to bring up RBC.
See Note.
See logic 05.30.20.1

ERROR 287

Any Disk Check indicator (39) failed to turn on the Any Data
indicator (19). (Address check was used to set Any Disk Check).
See Note.
See logic 91.25.30.1

NOTE: (Scope Loop)
1. Turn on Switch 1.
2. Push Start Key.

ERROR 290

MAR 8 bit 10 THOU latch failed to turn on.
See logic 05.06.30.1

NOTE:
(Scope Loop)

1. Push Start Key (Machine will again hang up).
2. Push Reset and Release simultaneously, then start. ERR will again typeout.
3. Repeat above steps to redevelope error. (Switch 1 on Bypasses ERR Typeout)

PROGRAM FLOW CHARTS
TABLE OF CONTENTS

MEANING OF SYMBOLS (used in flow charts)	04.01
CROSS REFERENCE (for off page connectors)	04.02
FLOW CHARTS - MAIN ROUTINES	
First Core Load	
Control	04.03
1620 File Indicator Reset	04.04
Branch No Group Mark	04.05
Read I-Cycle Entry	04.06 - 04.09
Flip MUC Triggers	04.10 - 04.11
Normal File Indicator Reset	04.12 - 04.13
Read Head Map	04.14 - 04.17
Second Core Load	
Write I-Cycle Entry	04.18 - 04.19
Blank Transfer	04.20 - 04.21
Write/Read Data Transfer	04.22 - 04.23
Write Head Map	04.24
Compare Latch	04.25
Restore Addresses	04.26
Read Sector	04.27 - 04.28
Seek	04.29
Group Mark Control	04.30 - 04.31
Force Error Latches	04.32 - 04.33
MAR 8 bit 10 THOU	04.34
FLOW CHARTS - AUXILLIARY ROUTINES	
First and Second Core Loads	
Bit Ring	04.35 - 04.37
Oscillator	04.38
Scan	04.39
First Core Load	
Select Lock	04.40 - 04.41
Spindle - Speed	04.42
Head Alignment	04.43

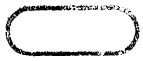

TERMINAL: THE BEGINNING, END OR POINT OF INTERRUPTION IN A PROCESS

OFF PAGE CONNECTOR: USED TO DESIGNATE ENTRY OR EXIT FROM A PAGE

INPUT/OUTPUT: ANY FUNCTION OF AN I/O DEVICE

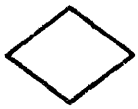

DECISION: INDICATES A POINT WHERE A BRANCH TO ALTERNATE PATHS IS POSSIBLE BASED ON VARIABLE CONDITIONS.

PROCESSING: A GROUP OF INSTRUCTIONS WHICH PERFORMS A PROCESSING FUNCTION

DISK: RANDOM ACCESS

CONNECTOR: AN ENTRY FROM OR EXIT TO ANOTHER PART OF THE PROGRAM (OR THE SAME PAGE).

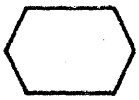

PREDEFINED PROCESS: A GROUP OF OPERATIONS NOT DETAILED IN THE PARTICULAR SET OF FLOW CHARTS.

PUNCHED CARD:

ST 0023
PN 2172366
EC 412531

CROSS REFERENCE
(FOR OFF PAGE CONNECTORS)

CONN, NO.	EXIT	ENTRY	CONN. NO.	EXIT	ENTRY
AA	04.03	04.04	BD	04.25	04.26
AB	04.04	04.05	BE	04.26, 28	04.27
AC	04.05, 09	04.06	BF	04.27	04.28
AD	04.06	04.07	BG	04.28	04.27
AE	04.07, 09	04.08	BH	04.26	04.29
AF	04.08	04.09	BI	04.29, 31	04.30
AG	04.09	04.10	BJ	04.30	04.31
AH	04.10	04.11	BK	04.31	04.30
AI	04.11	04.10	BL	04.31, 33	04.32
AJ	04.11, 13	04.12	BM	04.32	04.33
AK	04.12	04.13	BN	04.33	04.32
AL			BP	04.33	04.34
AM	04.13	04.12	BQ		
AN	04.13, 15, 16, 17	04.14	BR		
AP	04.14	04.15	BS		
AQ	04.15	04.16	BT		
AR	04.15, 39, 43	04.03	BU	04.15	04.35
AS	04.20	04.21	BV	04.35	04.36
AT	04.15	04.17	BW		
AU	04.15, 16	04.17	BX	04.36	04.37
AV	04.15, 34, 41	04.18	BY	04.36, 37	04.35
AW	04.18, 34	04.19	BZ	04.37	04.35
AX	04.19, 21, 23	04.20	CA	04.37	04.38
AY	04.20, 23	04.22	CB	04.15, 16, 38	04.39
AZ	04.22	04.23	CC	04.12, 15, 41	04.40
BA	04.20	04.23	CD	04.40	04.41
BB	04.23	04.24			
BC	04.24	04.25			

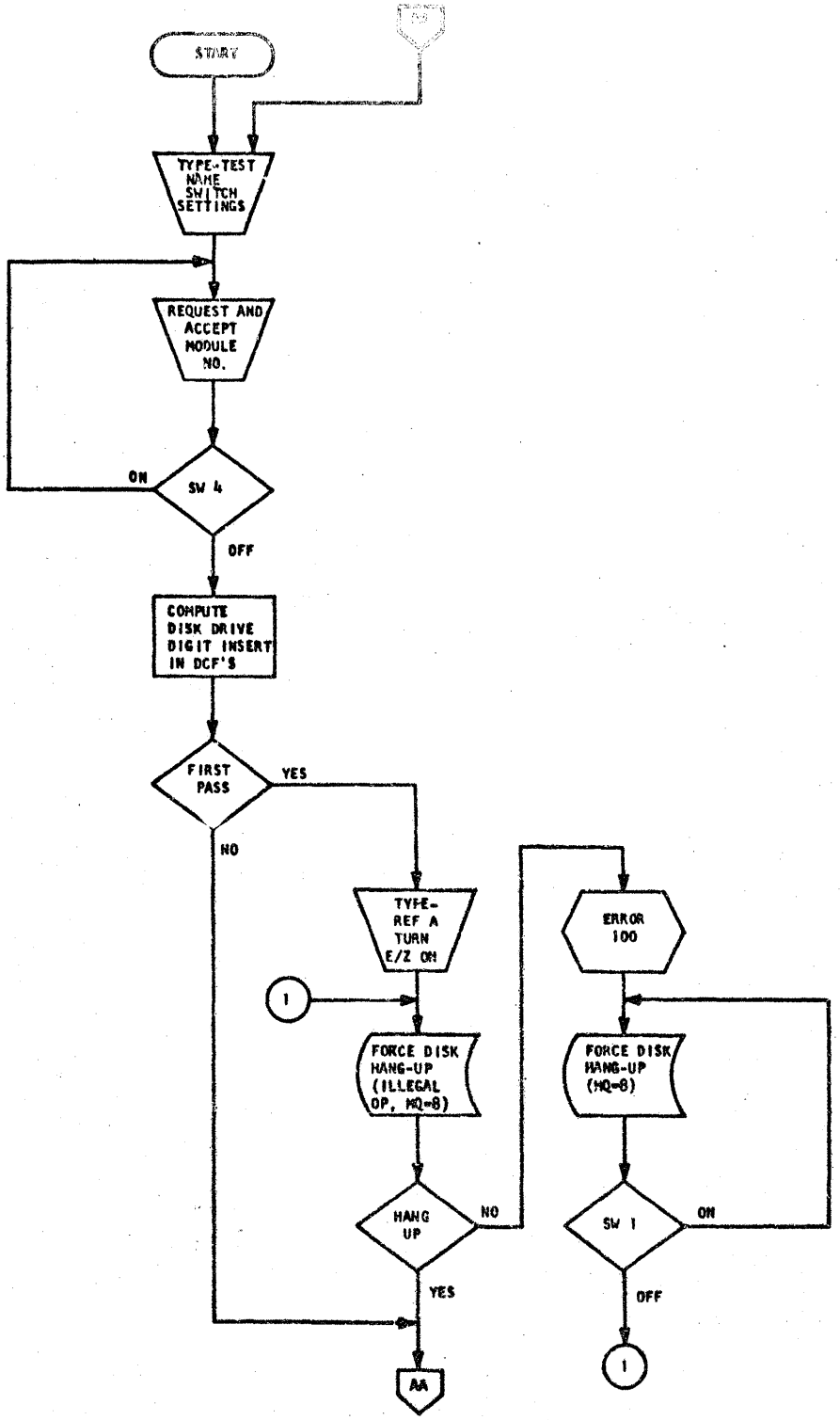

DT 0023
FH 2172366
EC 412531

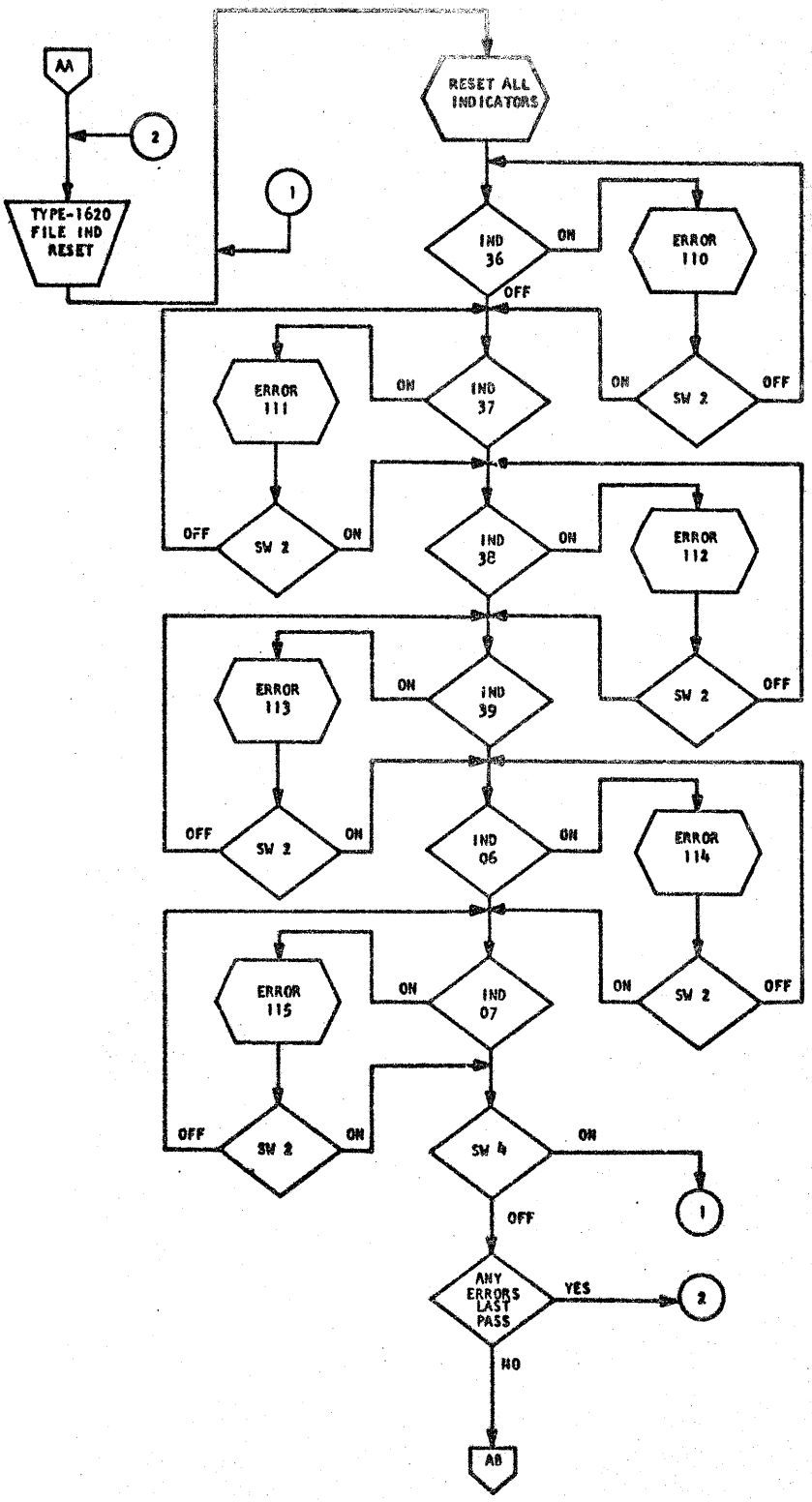
AA
2
TYPE-1620 FILE IND RESET
1
RESET ALL INDICATORS
IND 36
ON
ERROR 110
OFF
ERROR 111
ON
IND 37
ON
SW 2
OFF
OFF
SW 2
ON
IND 38
ON
ERROR 112
ERROR 113
ON
IND 39
SW 2
OFF
OFF
SW 2
ON
IND 06
ON
ERROR 114
ERROR 115
ON
IND 07
ON
SW 2
OFF
OFF
SW 2
ON
SW 4
ON
1
OFF
ANY ERRORS LAST PASS
YES
2
NO
AB

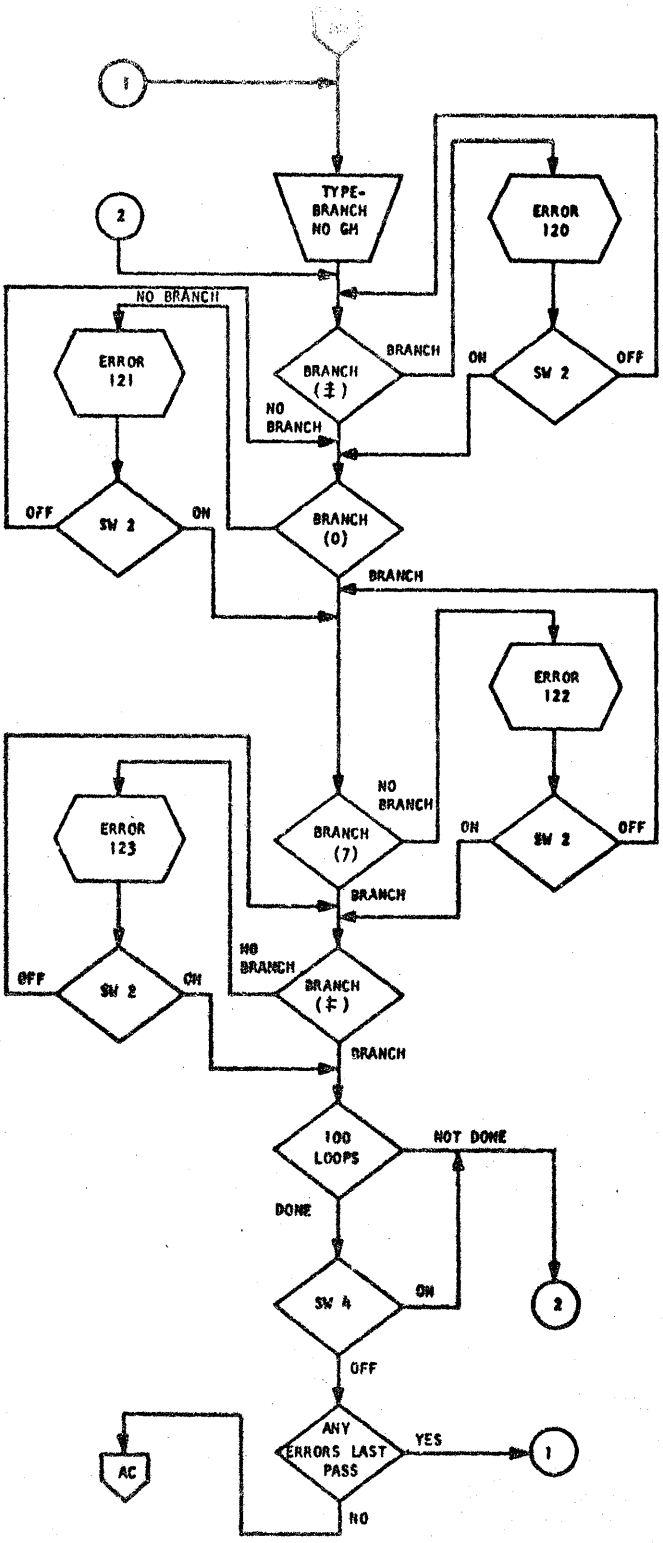

DT 0023
PN 2172366
EC 418531

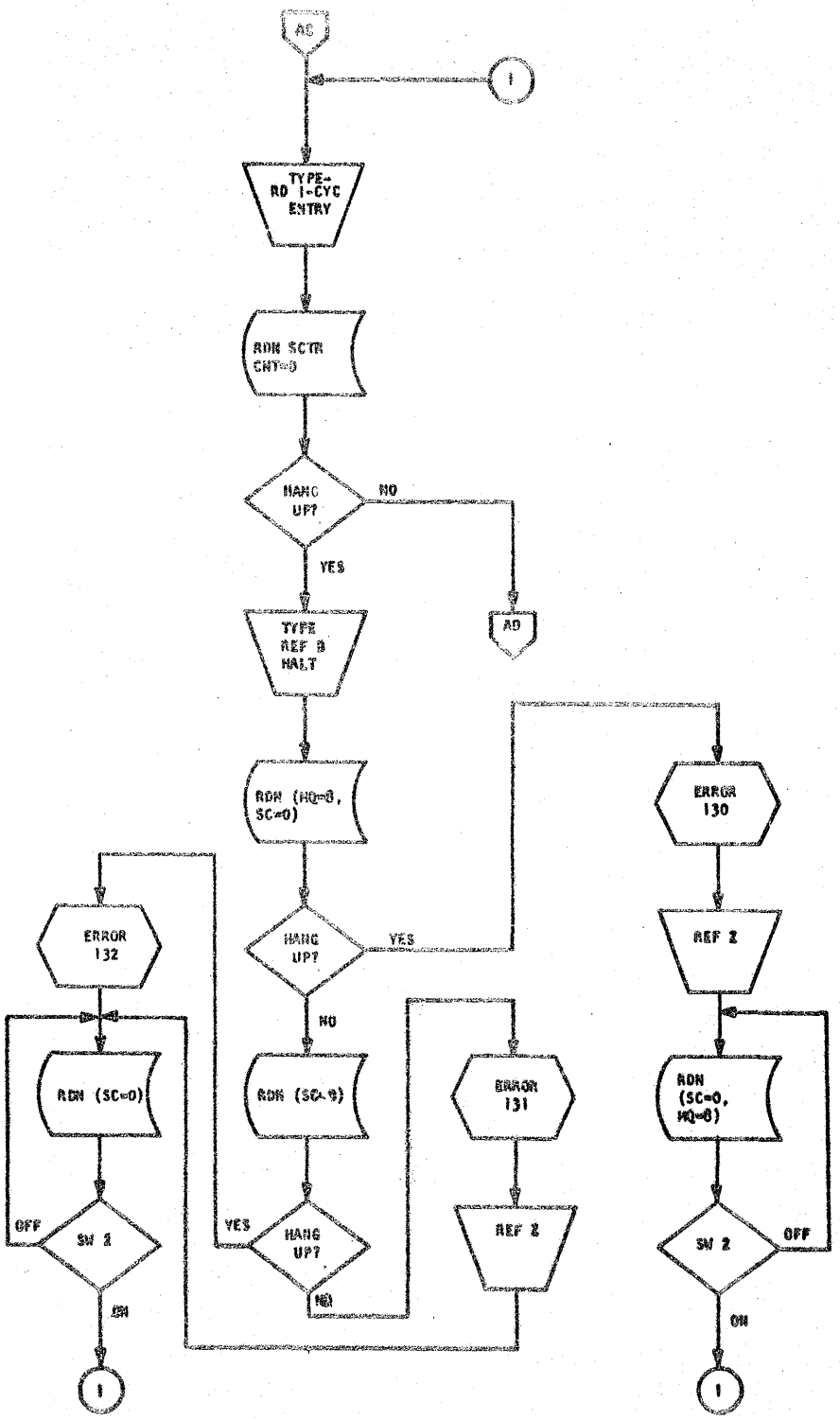
AC
1
TYPE-
RD 1-CYC
ENTRY
RDN SCTR
CNT=0
HANG
UP?
NO
YES
AD
TYPE
REF 8
HALT
RDN (HQ=8,
SC=0)
HANG
UP?
YES
NO
ERROR
130
REF 2
RDN
(SC=0,
HQ=8)
SW 2
OFF
ON
ERROR
131
REF 2
RDN (SC=0)
HANG
UP?
YES
NO
ERROR
132
RDN (SC=0)
SW 2
OFF
ON
1
1
1

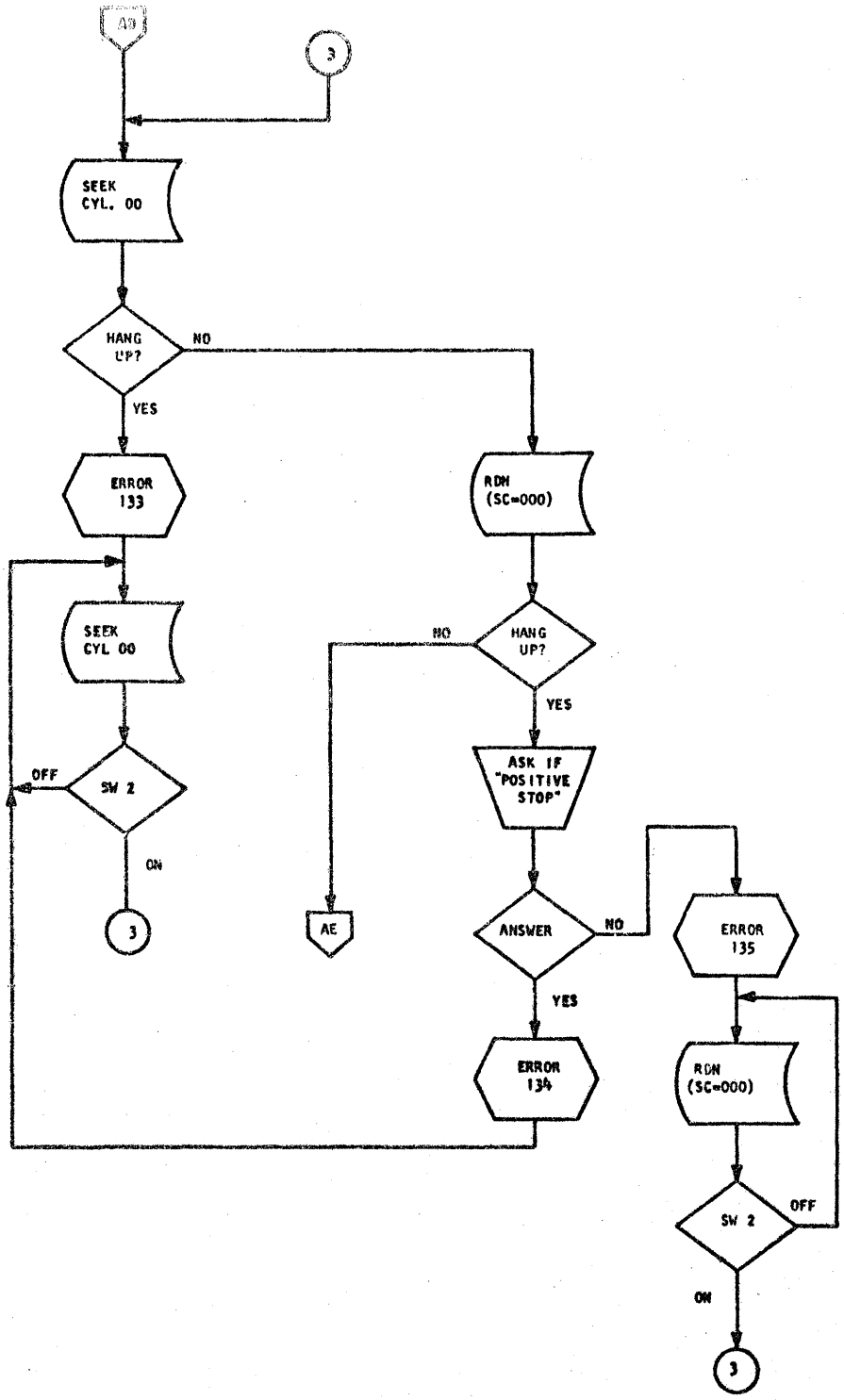

DT 0023
PN 2172366
EC 412531

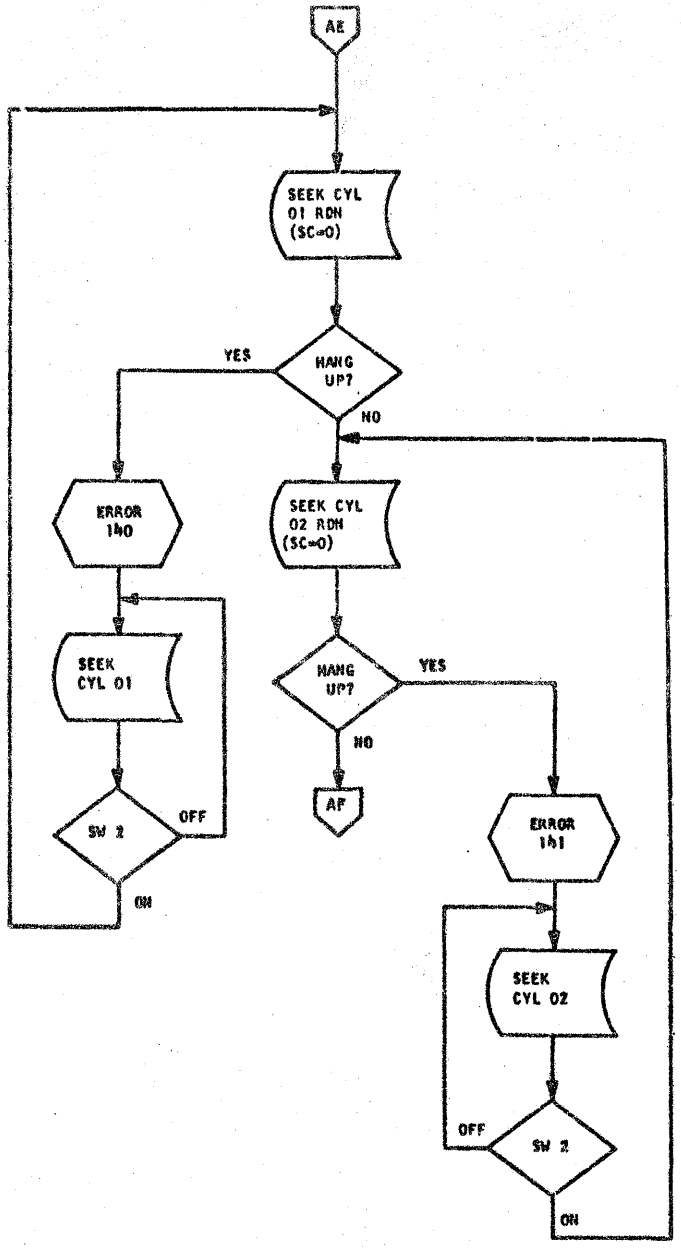
AE
SEEK CYL
01 RDN
(SC=0)
HANG
UP?
YES
NO
ERROR
140
SEEK
CYL 01
SW 2
OFF
ON
SEEK CYL
02 RDH
(SC=0)
HANG
UP?
YES
NO
AF
ERROR
141
SEEK
CYL 02
SW 2
OFF
ON

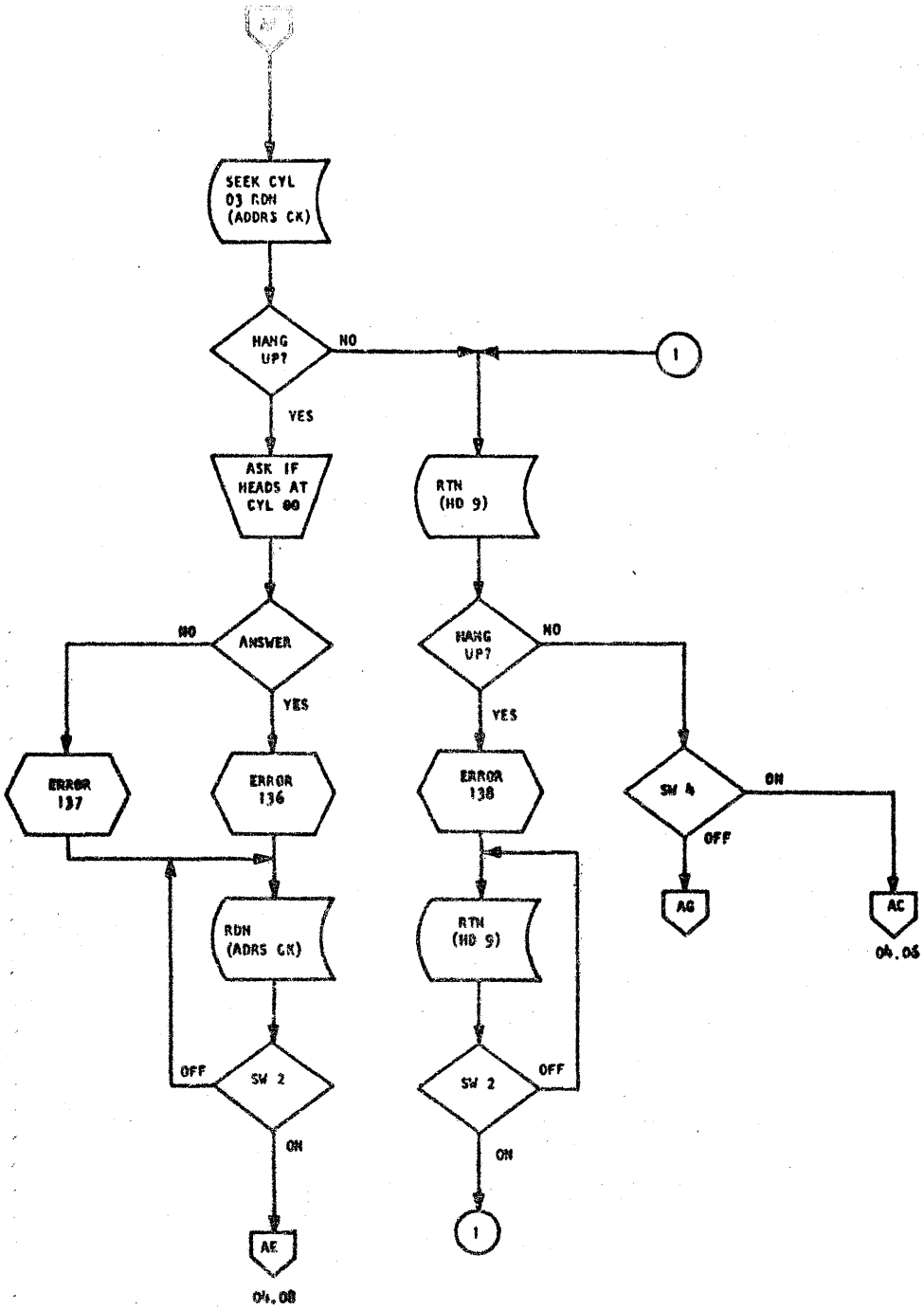

ST 0023
PN 2172366
EC 412531

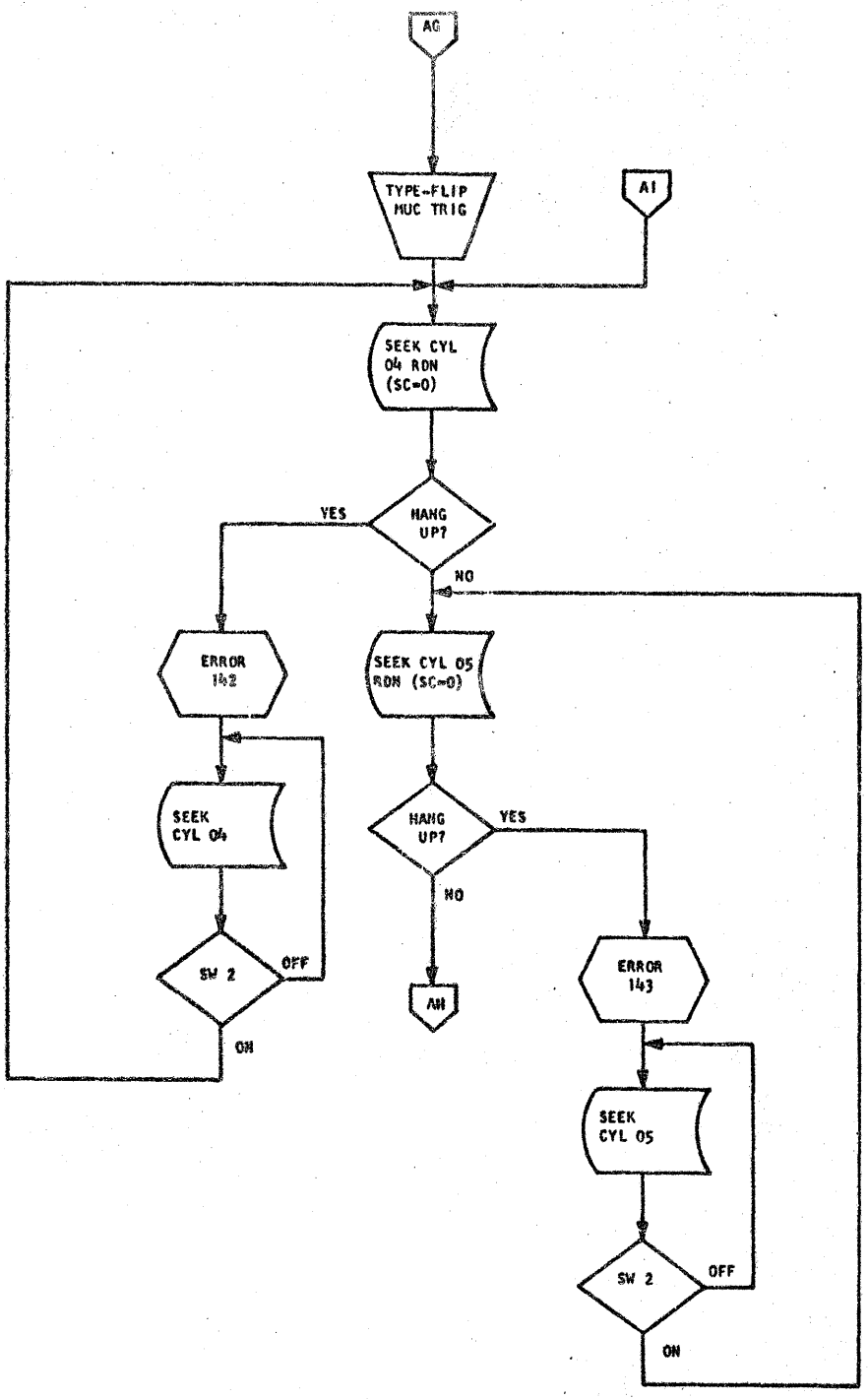
AG
TYPE-FLIP MUC TRIG
AI
SEEK CYL 04 RDN (SC=0)
HANG UP?
YES
NO
ERROR 142
SEEK CYL 05 RDN (SC=0)
SEEK CYL 04
HANG UP?
YES
NO
SW 2
OFF
ON
AH
ERROR 143
SEEK CYL 05
SW 2
OFF
ON

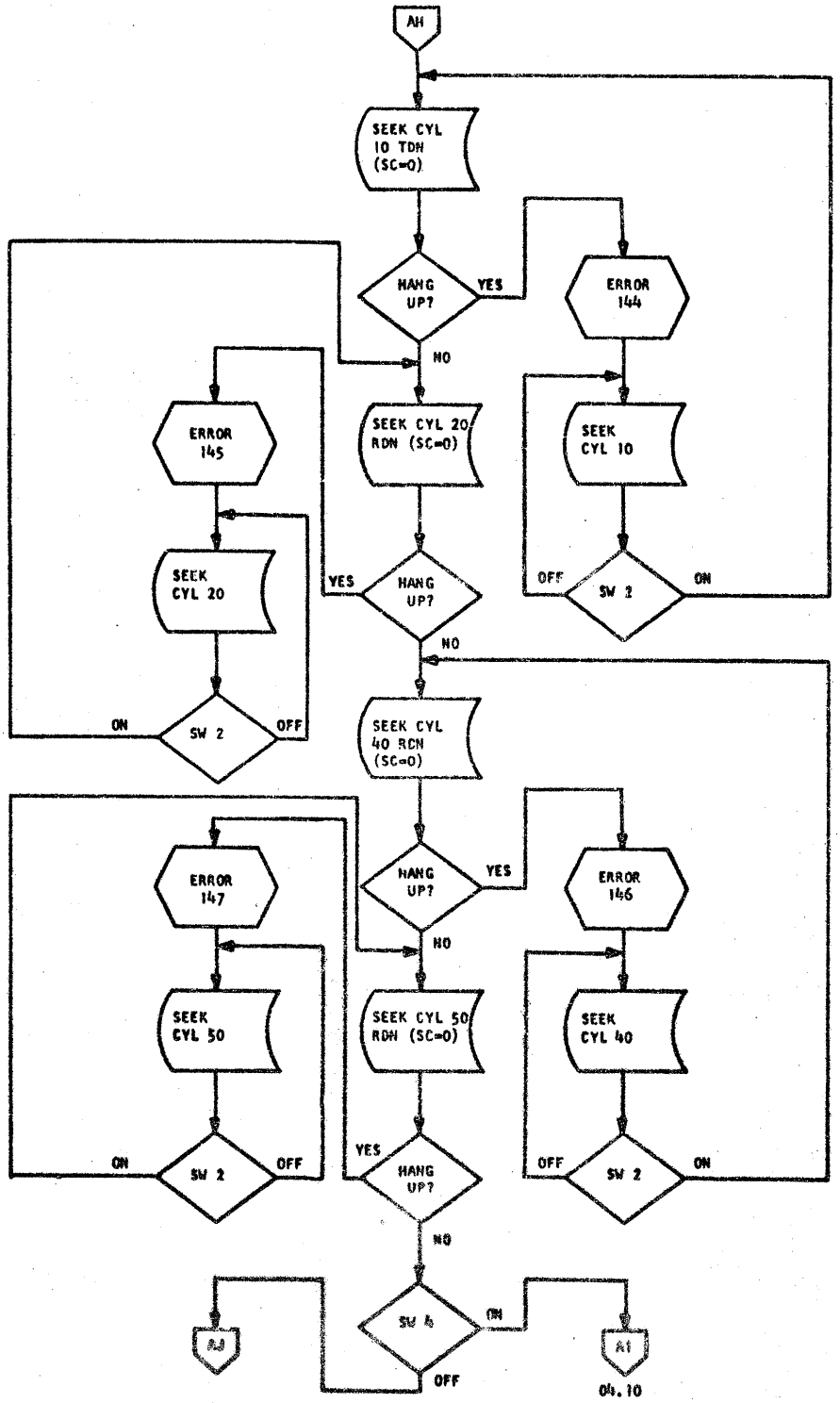

DT 0023
PN 2172366
EC 412531

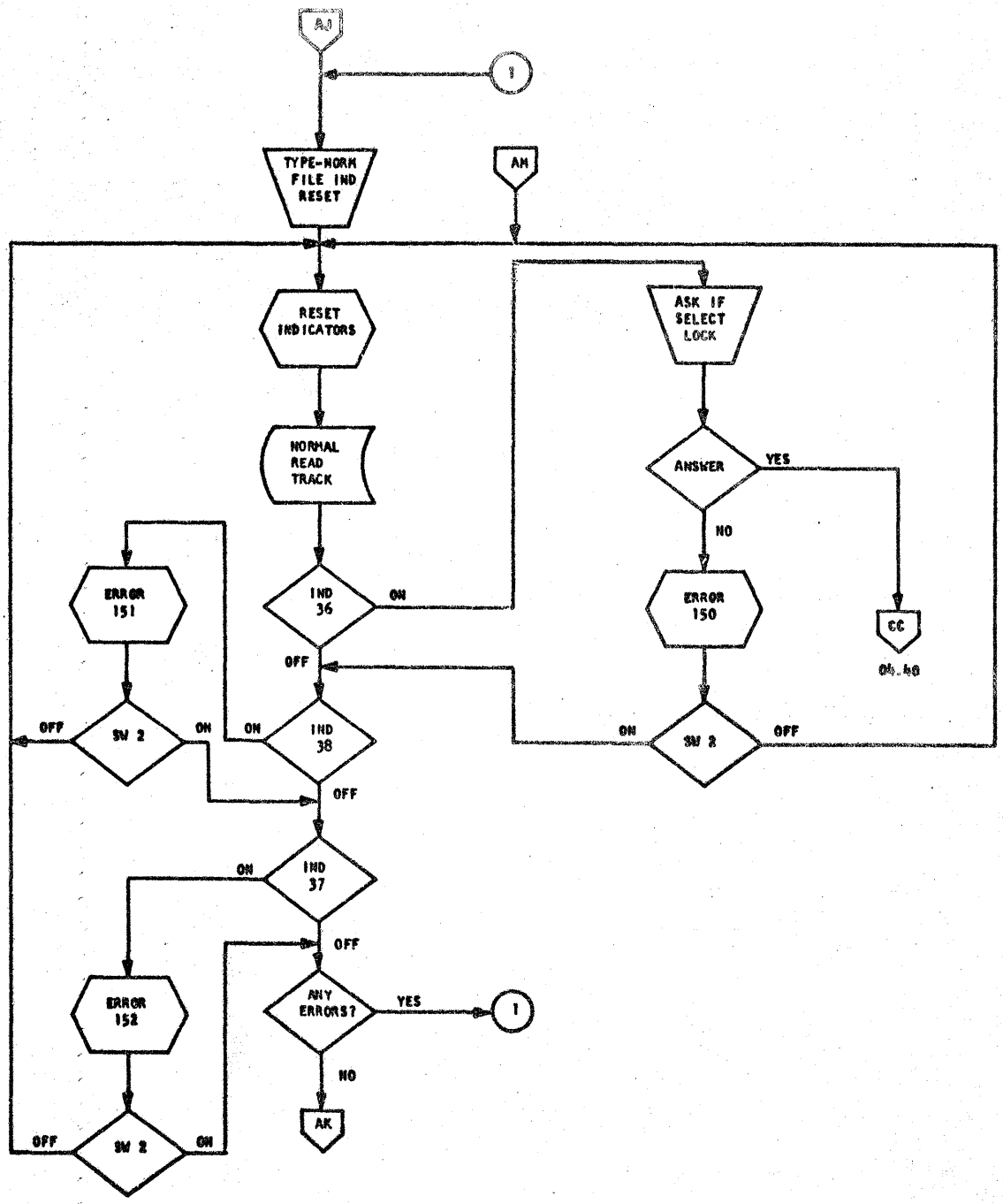
AJ
1
TYPE-NORM FILE IND RESET
AH
RESET INDICATORS
NORMAL READ TRACK
IND 36
ON
OFF
ERROR 151
SW 2
OFF
ON
ON
IND 38
OFF
IND 37
ON
OFF
ERROR 152
ANY ERRORS?
YES
1
NO
AK
SW 2
OFF
ON
ASK IF SELECT LOCK
ANSWER
YES
NO
ERROR 150
CC
04.40
ON
SW 2
OFF

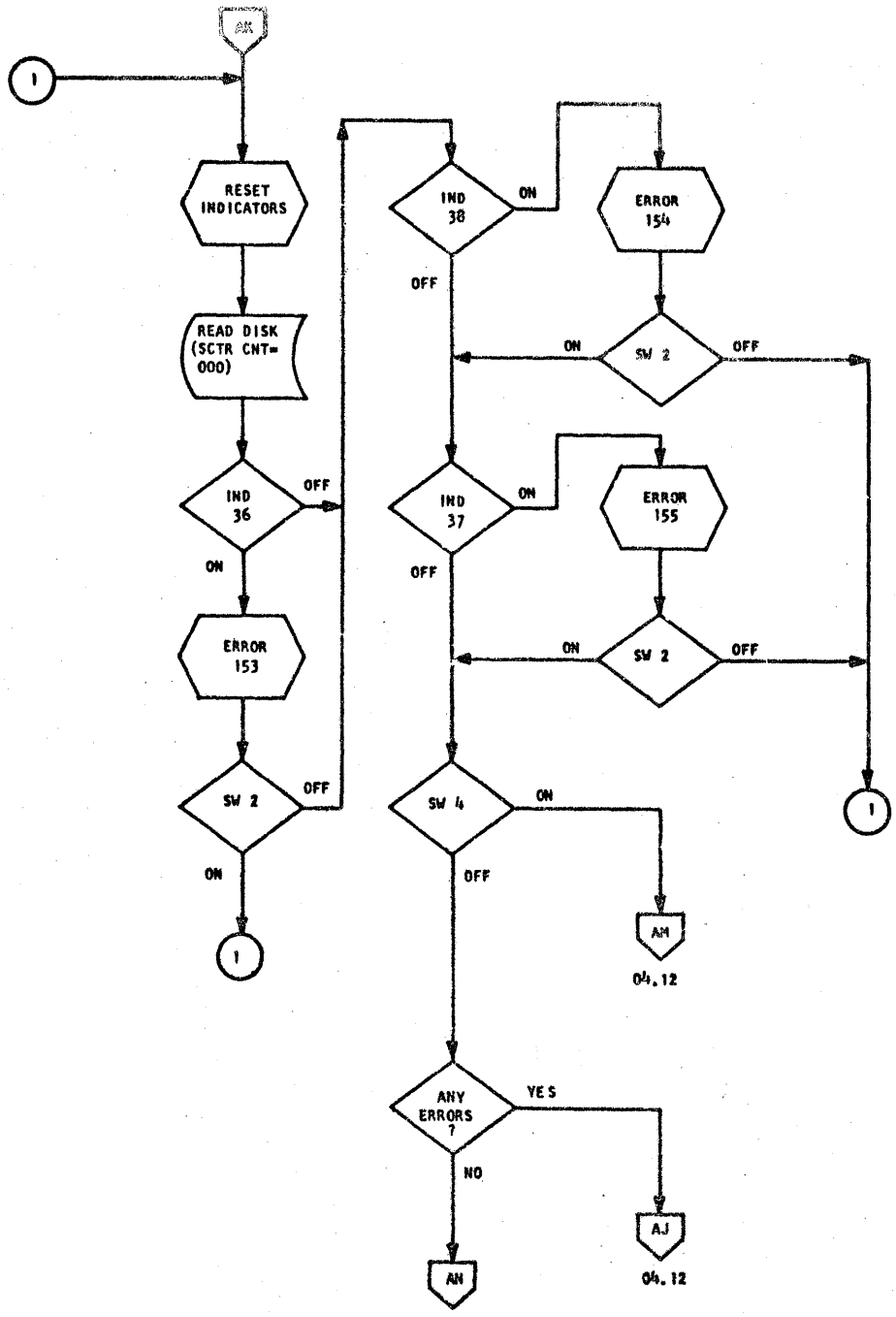

DT 0023
PN 2172366
EC 412531

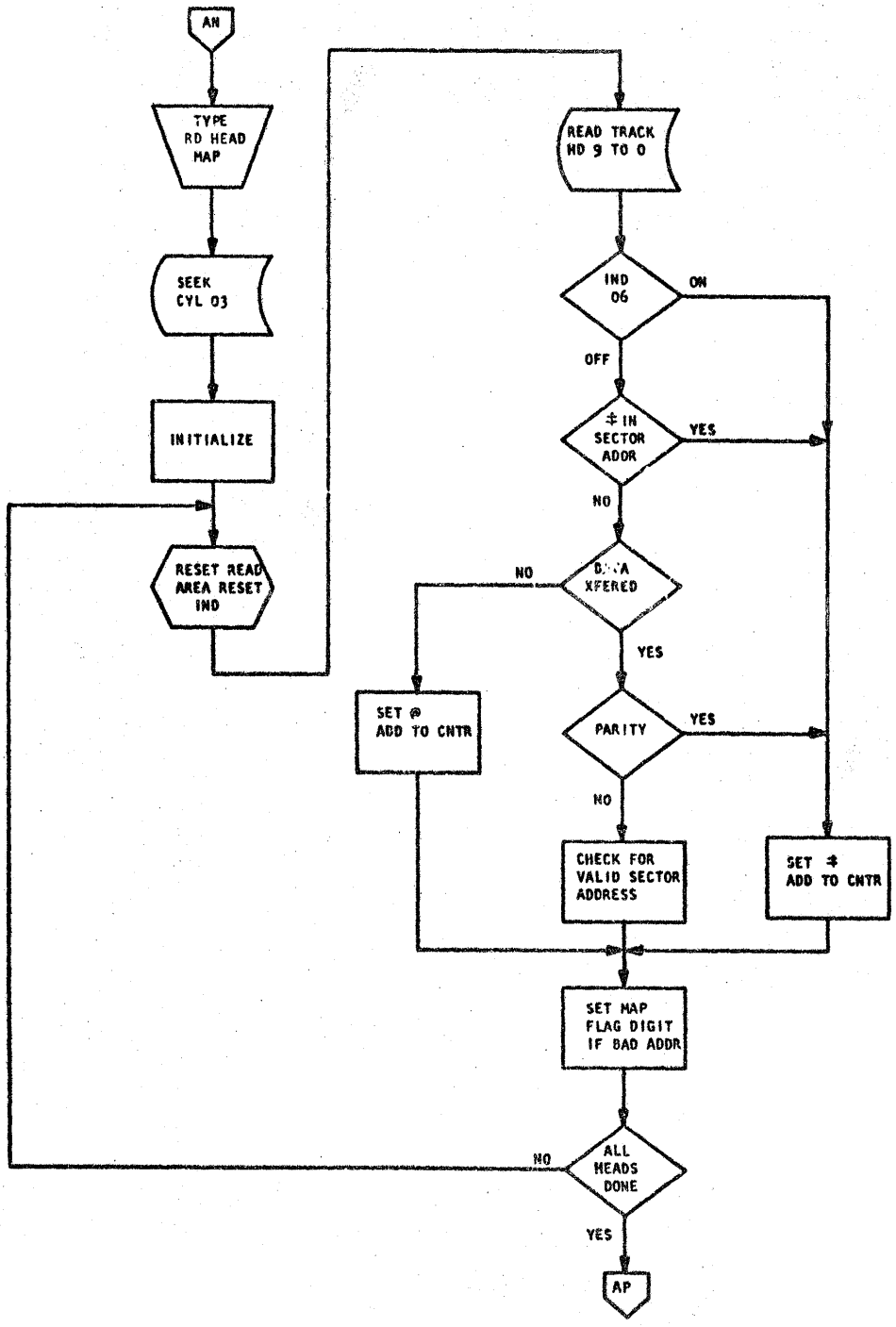

DT 0023
PN 2172366
EC 412531

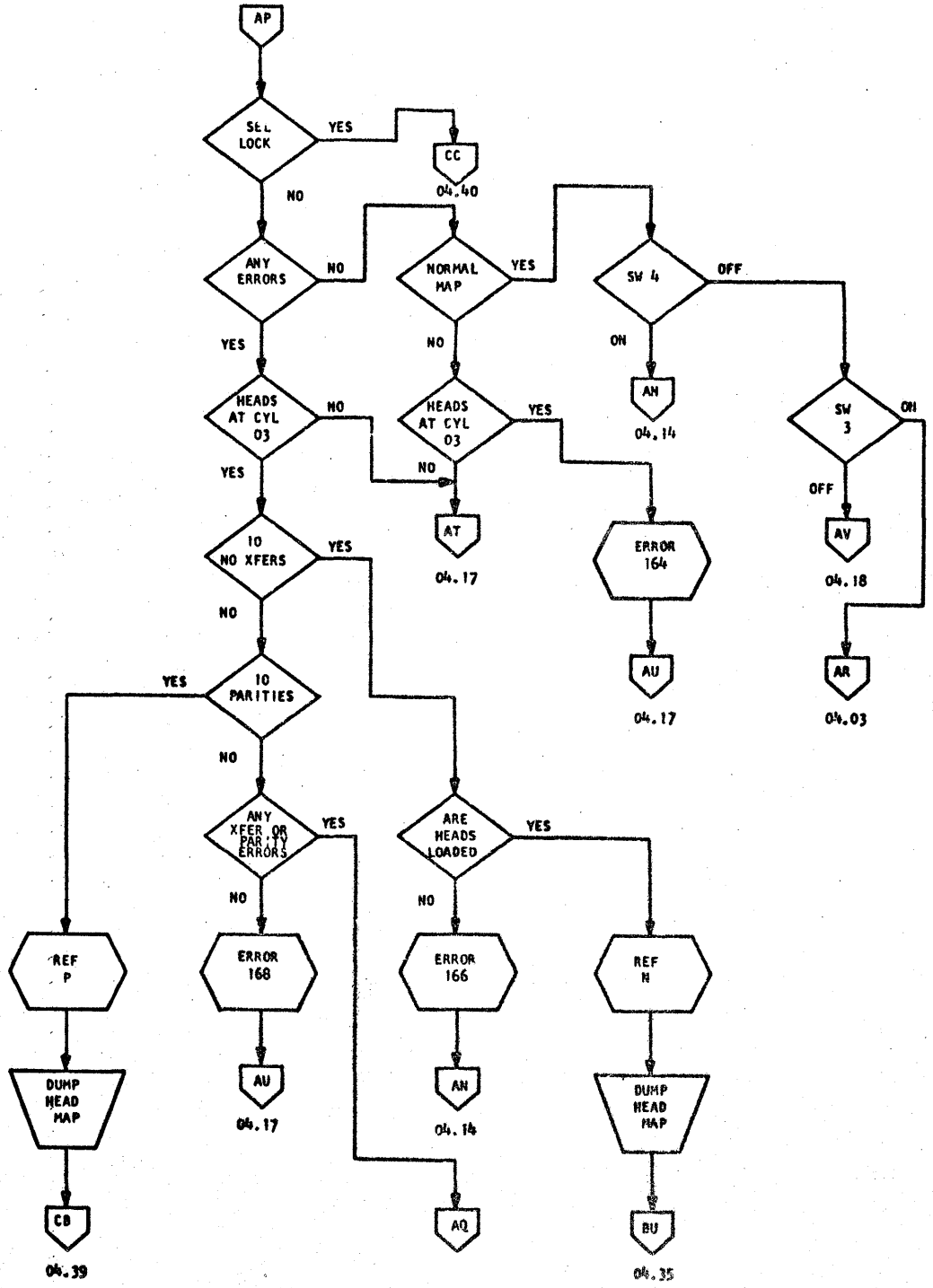

DT 0023
PN 2172366
EC 412531

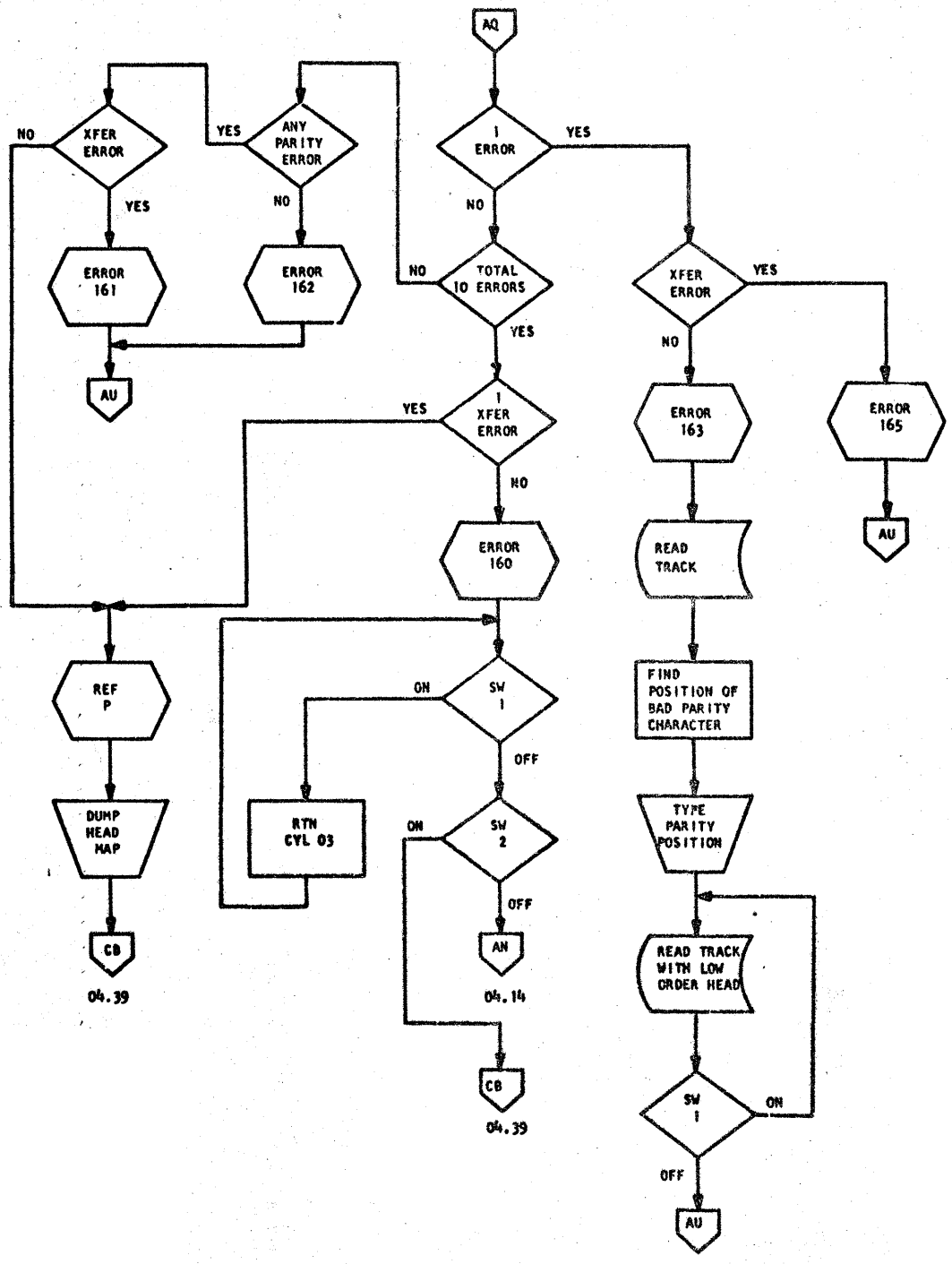
AQ
I ERROR
YES
NO
XFER ERROR
NO
YES
ANY PARITY ERROR
NO
YES
ERROR 161
ERROR 162
AU
NO
TOTAL IO ERRORS
YES
I XFER ERROR
YES
NO
ERROR 160
XFER ERROR
YES
NO
ERROR 163
ERROR 165
AU
READ TRACK
FIND POSITION OF BAD PARITY CHARACTER
TYPE PARITY POSITION
READ TRACK WITH LOW ORDER HEAD
SW 1
ON
OFF
AU
REF P
DUMP HEAD MAP
CB
04.39
SW 1
ON
OFF
RTN CYL 03
SW 2
ON
OFF
AN
04.14
CB
04.39

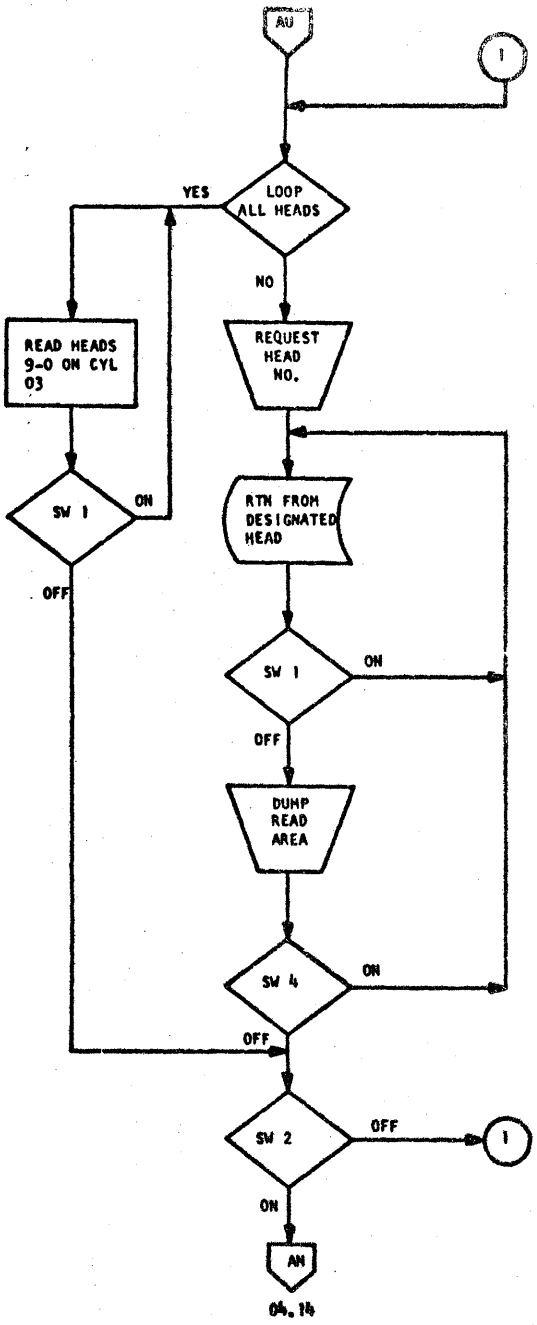
AU
1
YES
LOOP ALL HEADS
NO
READ HEADS 9-0 ON CYL 03
REQUEST HEAD NO.
SW 1
ON
OFF
RTN FROM DESIGNATED HEAD
SW 1
ON
OFF
DUMP READ AREA
SW 4
ON
OFF
SW 2
OFF
1
ON
AN
04.14

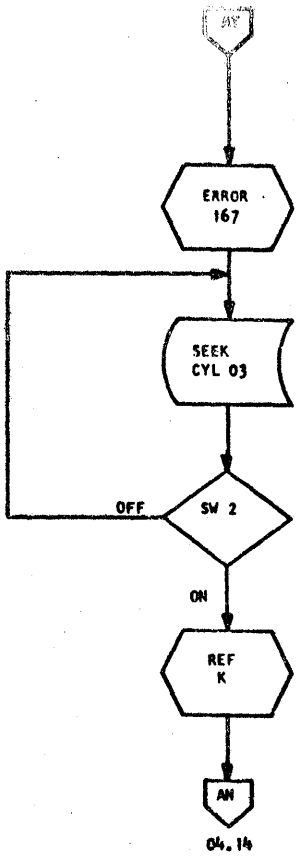
AY
ERROR 167
SEEK CYL 03
OFF
SW 2
ON
REF K
AN
04.14

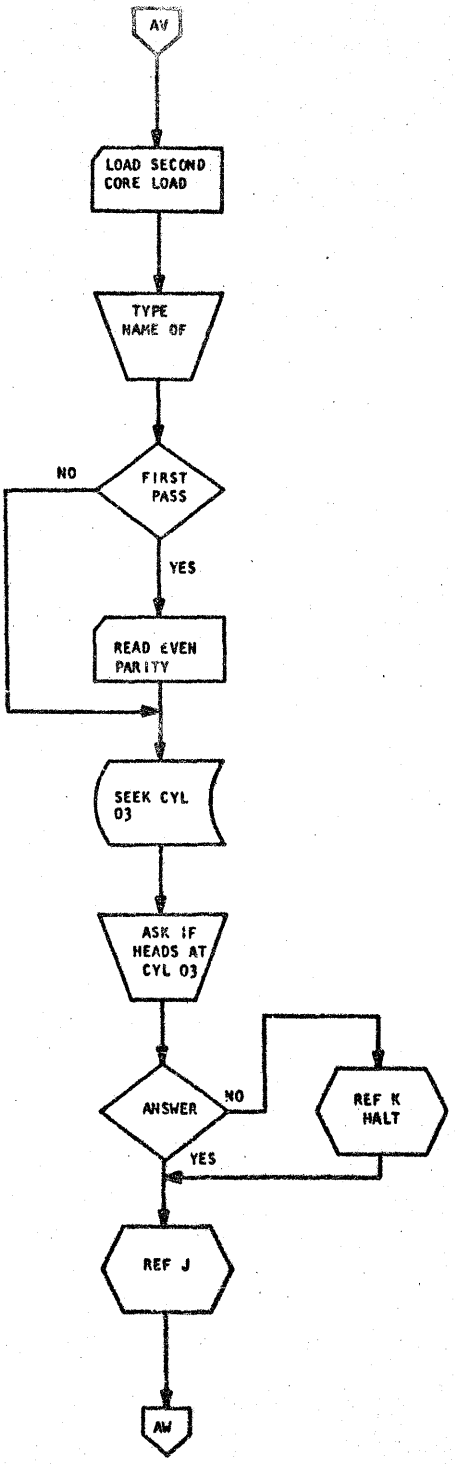

DT 0023
PN 2172366
EC 412531

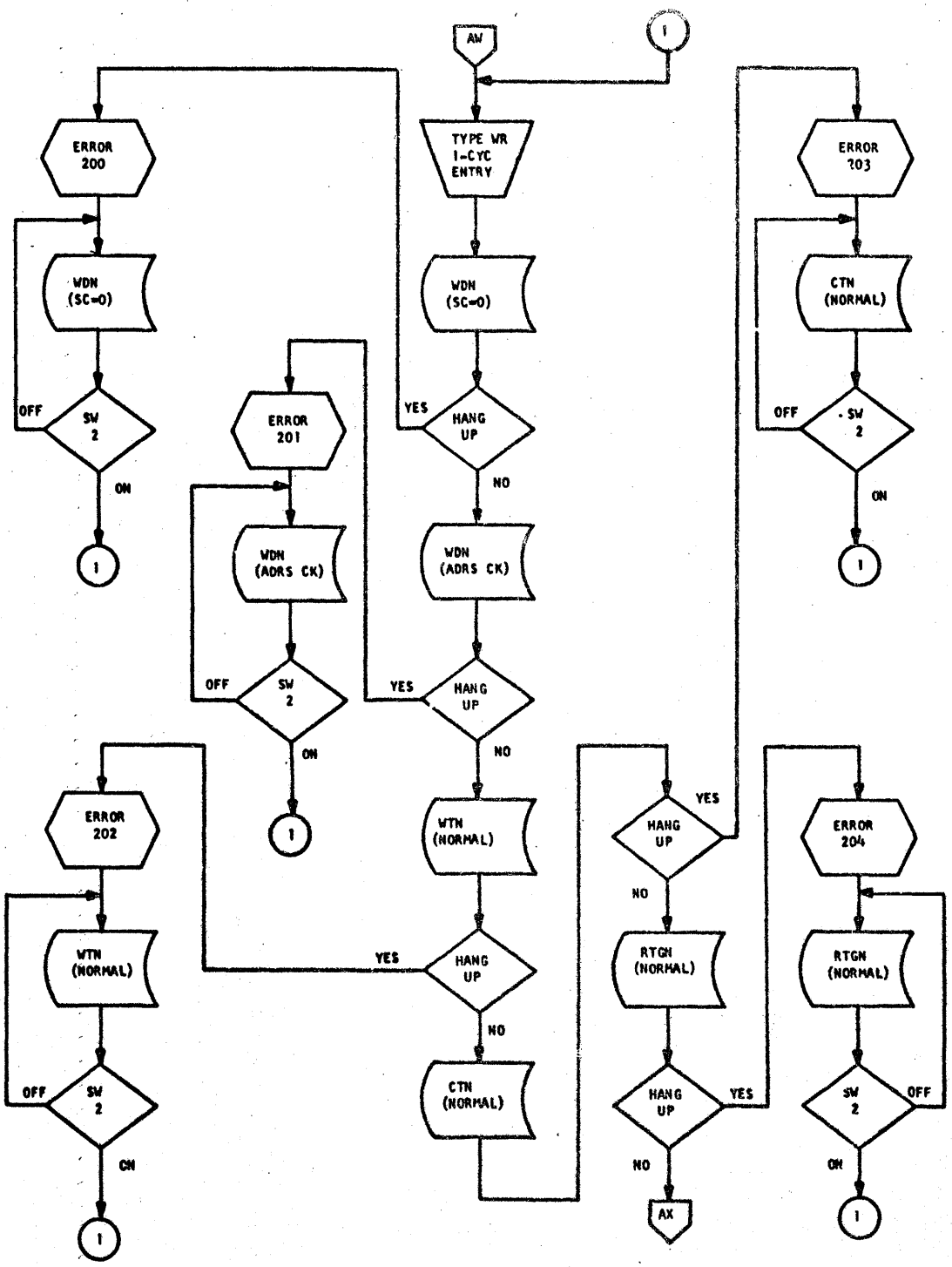

DT 0023
PN 2172366
EC 412531

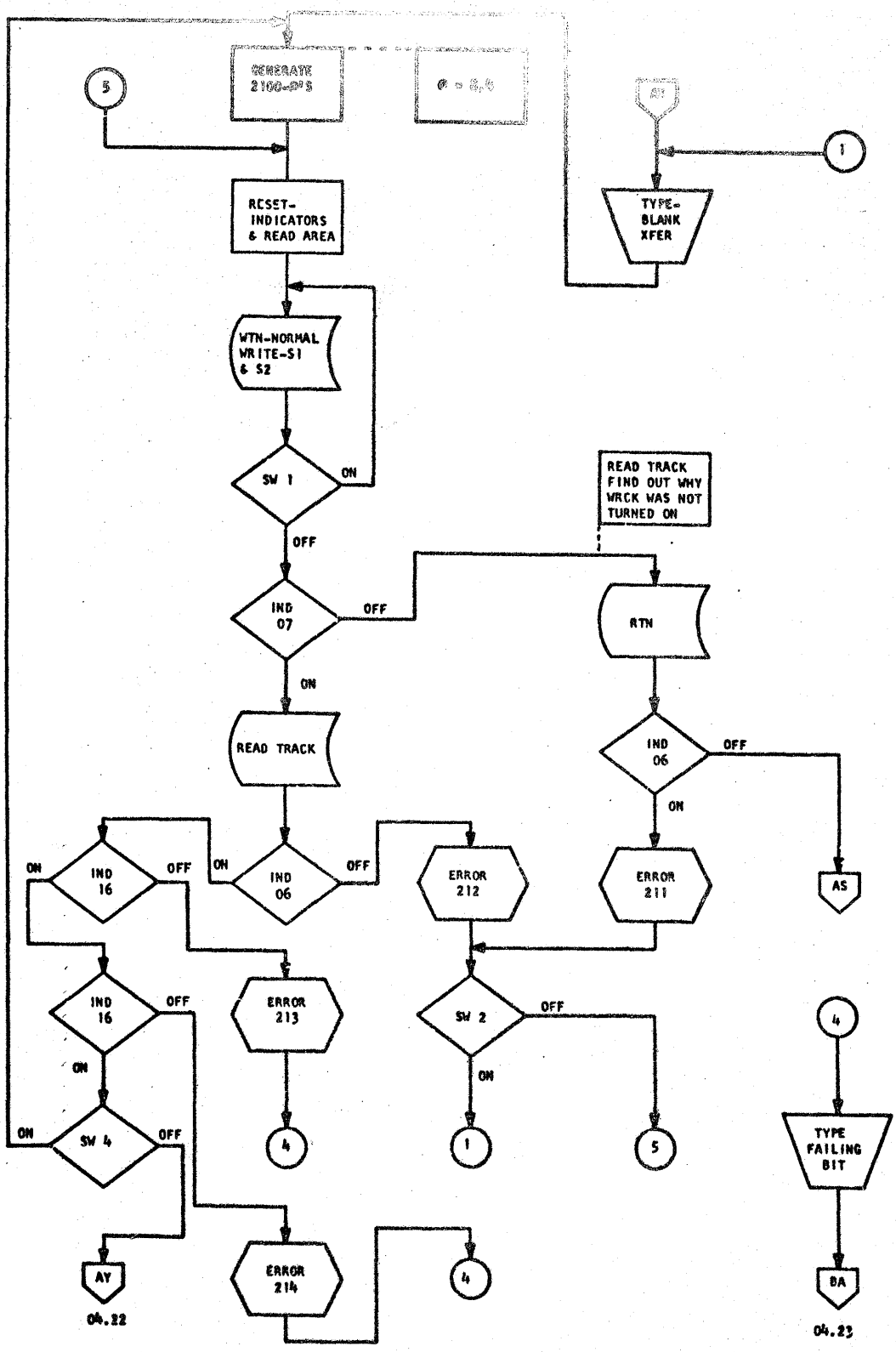

DT 0023
PN 2172366
EC 412531

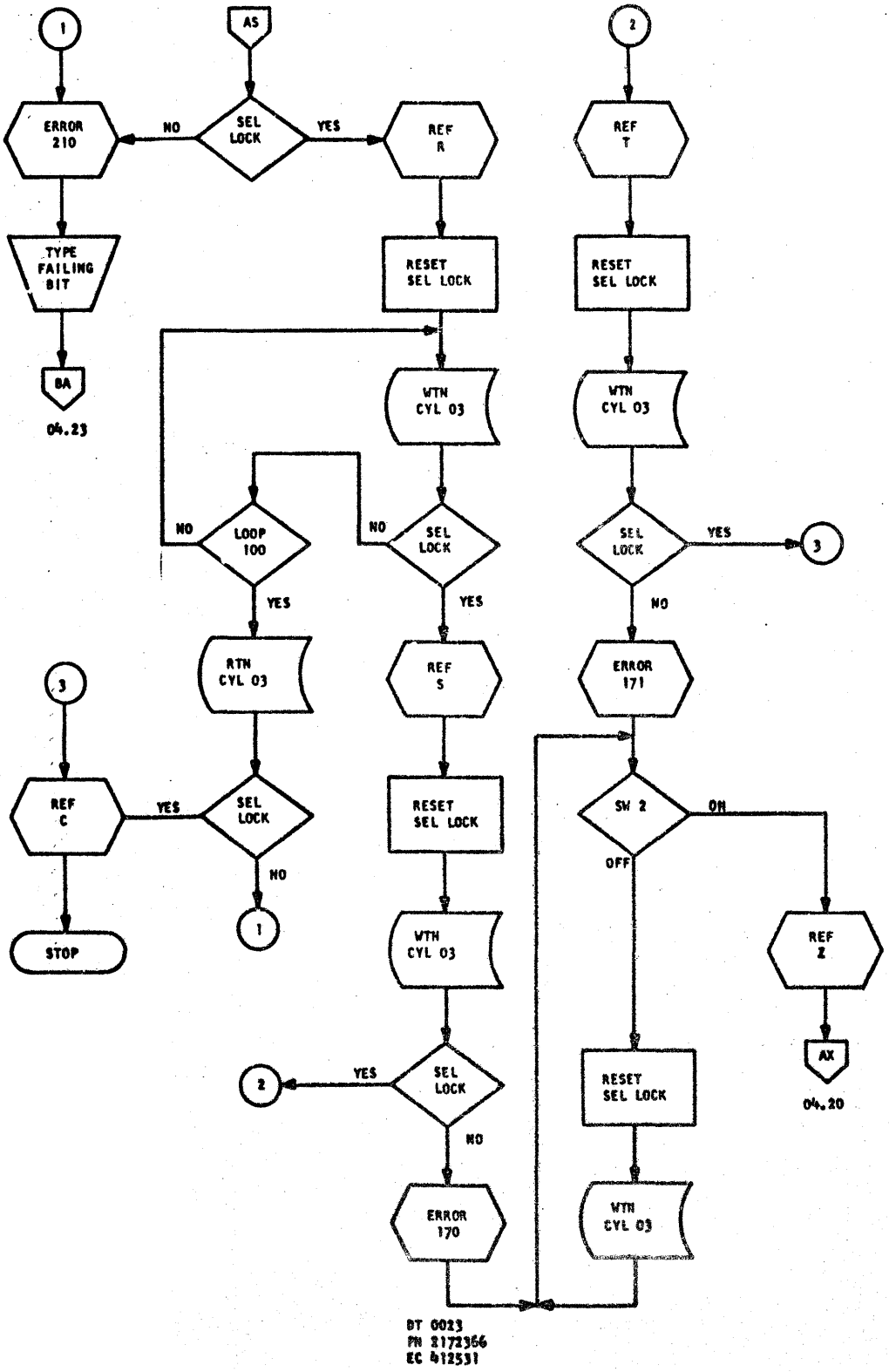
1
AS
2
ERROR 210
NO
SEL LOCK
YES
REF R
REF T
TYPE FAILING BIT
RESET SEL LOCK
RESET SEL LOCK
8A
04.23
WTN CYL 03
WTN CYL 03
NO
LOOP 100
NO
SEL LOCK
SEL LOCK
YES
3
YES
YES
NO
RTN CYL 03
REF S
ERROR 171
3
REF C
YES
SEL LOCK
RESET SEL LOCK
SW 2
ON
NO
OFF
1
STOP
WTN CYL 03
REF Z
AX
04.20
2
YES
SEL LOCK
RESET SEL LOCK
NO
ERROR 170
WTN CYL 03
BT 0023
PN 2172366
EC 412531

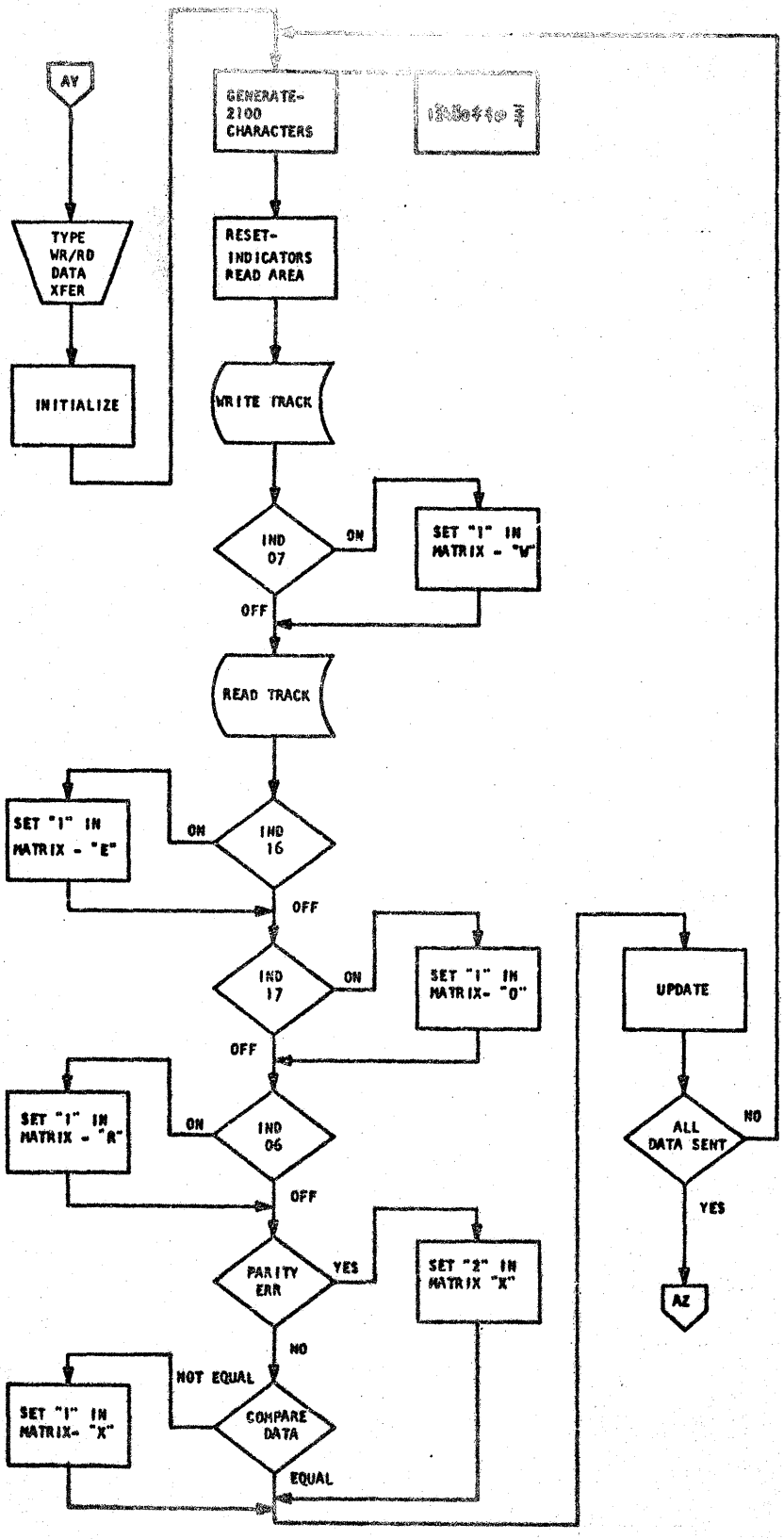

DT 0023
PN 2172366
EC 412531

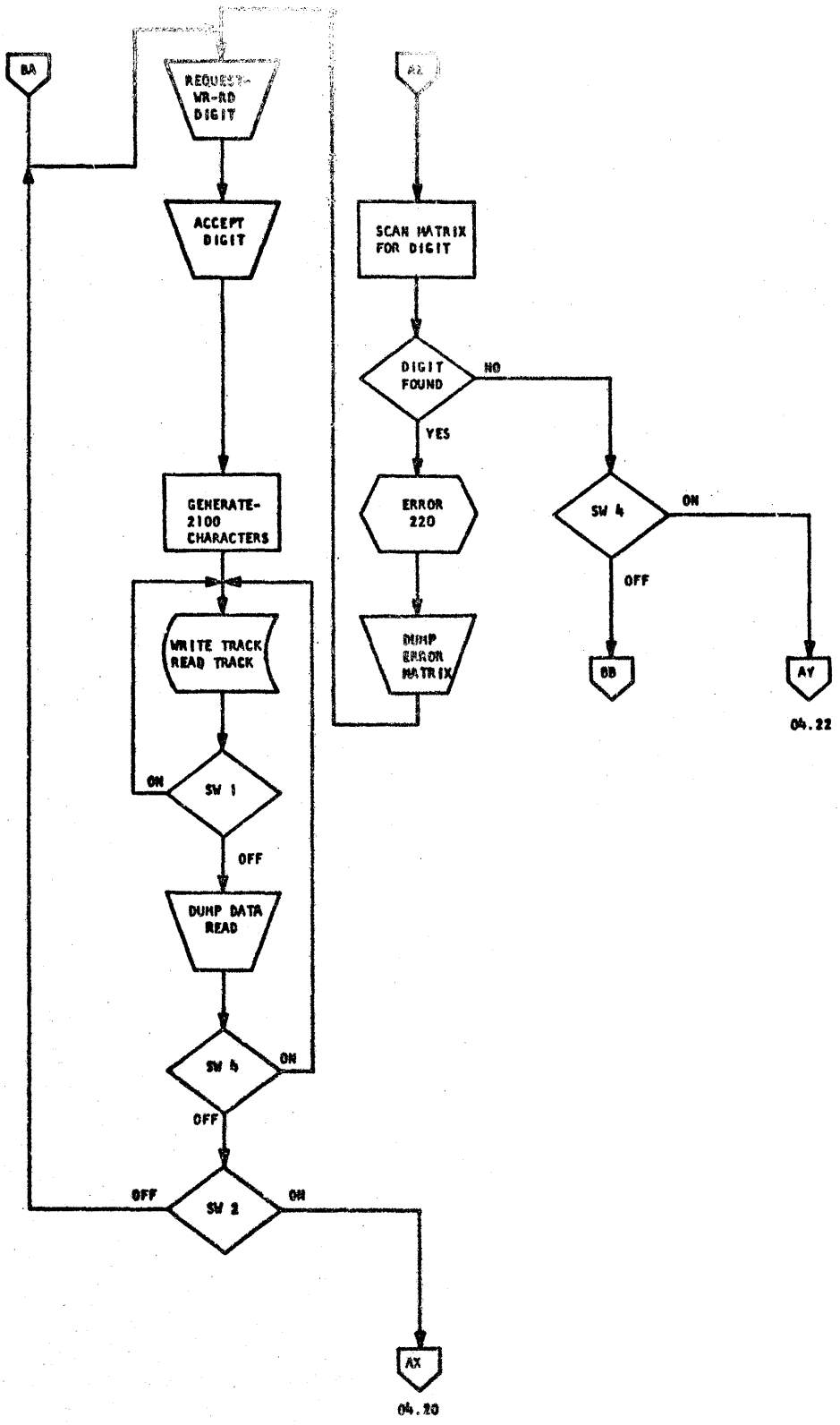

DT 0023
PN 2172366
EC 412531

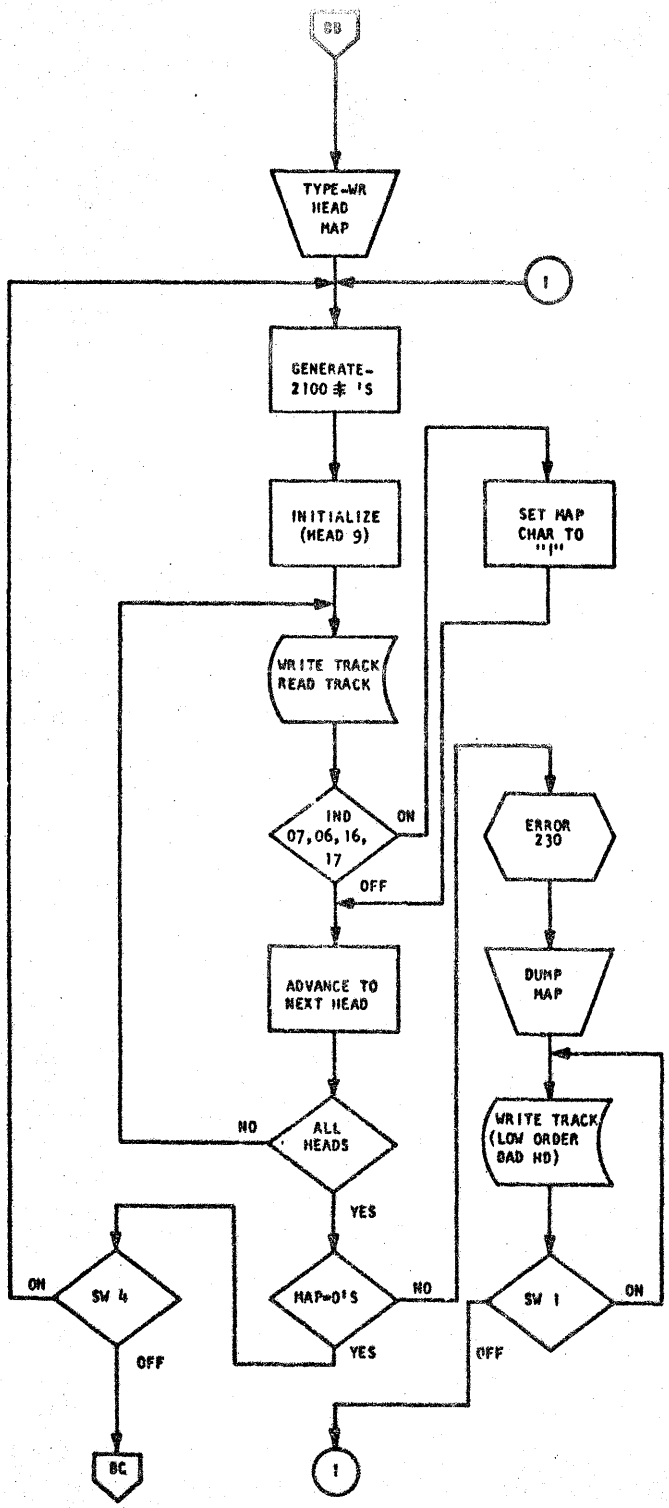

DT 0023
PN 2172366
EC 412531

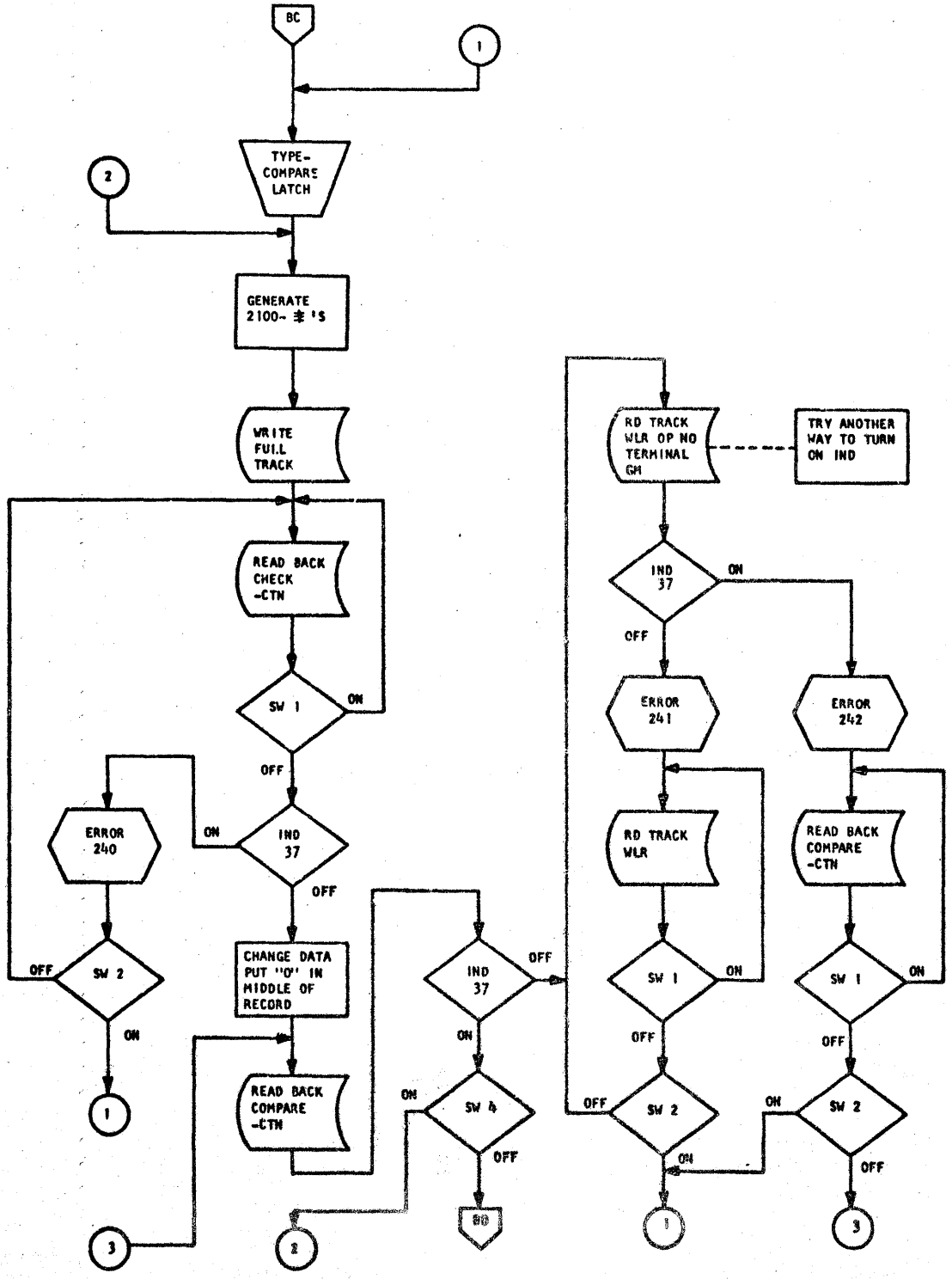

DT 0023
PN 2172366
EC 412531

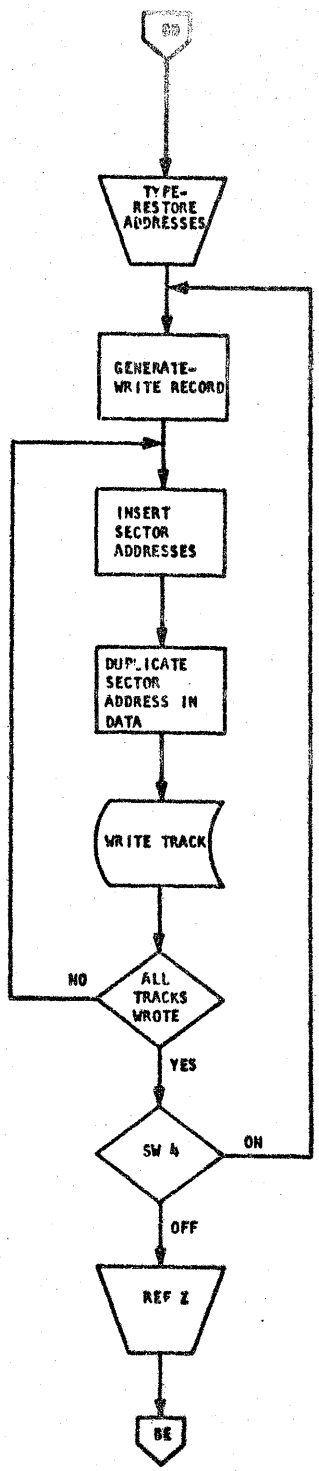
02
TYPE-
RESTORE
ADDRESSES
GENERATE-
WRITE RECORD
INSERT
SECTOR
ADDRESSES
DUPLICATE
SECTOR
ADDRESS IN
DATA
WRITE TRACK
NO
ALL
TRACKS
WROTE
YES
SW 4
ON
OFF
REF Z
BE

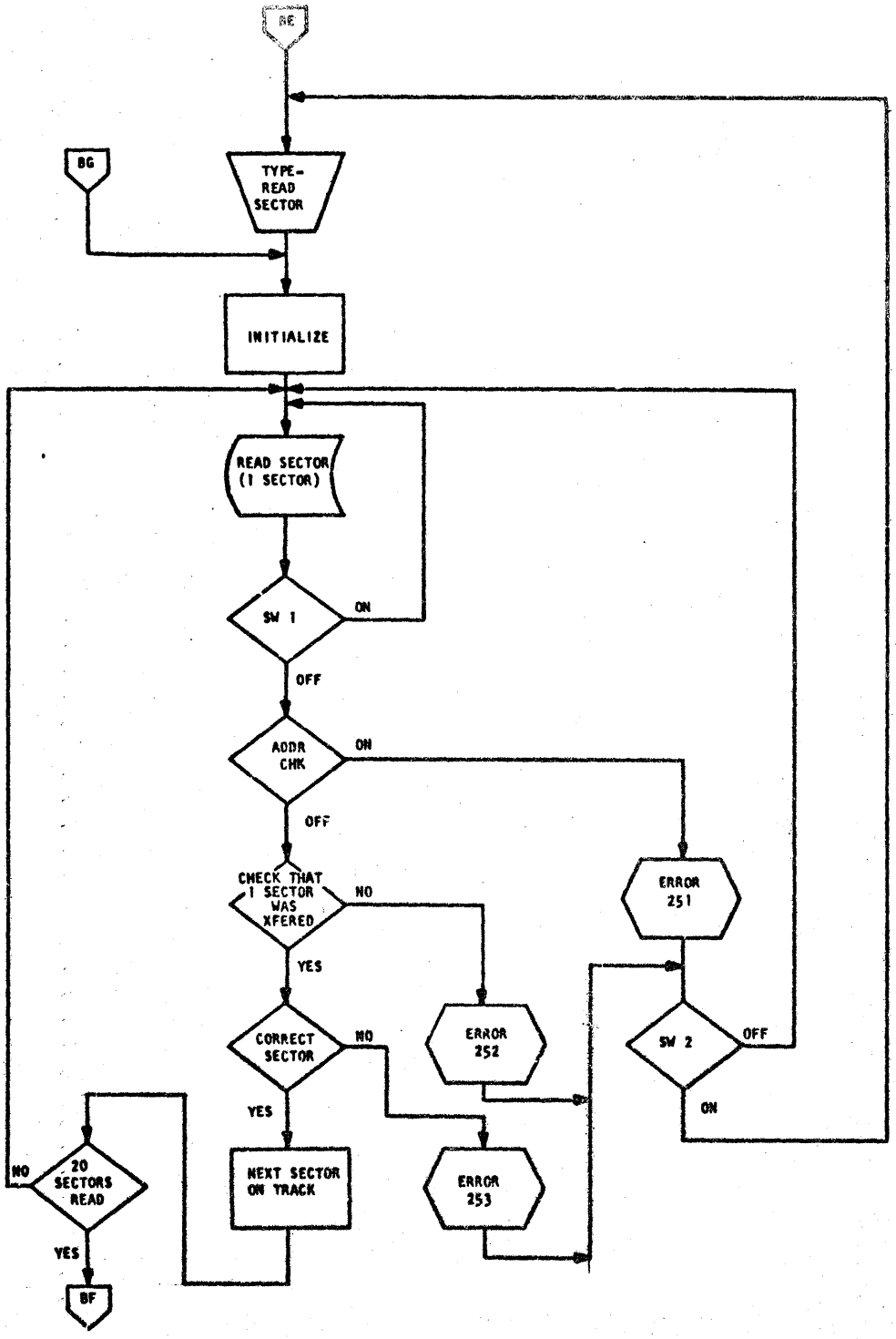

DT 0023
PN 2172366
EC 412531

READ SECTOR CONTINUED

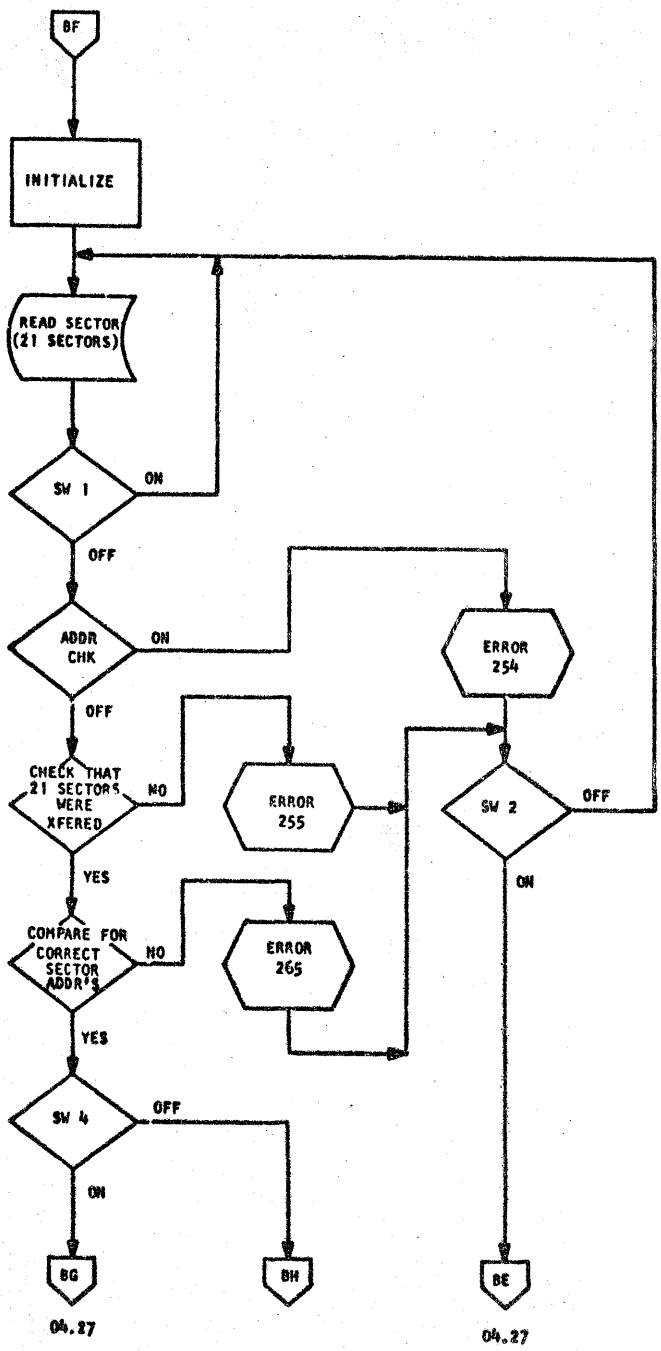

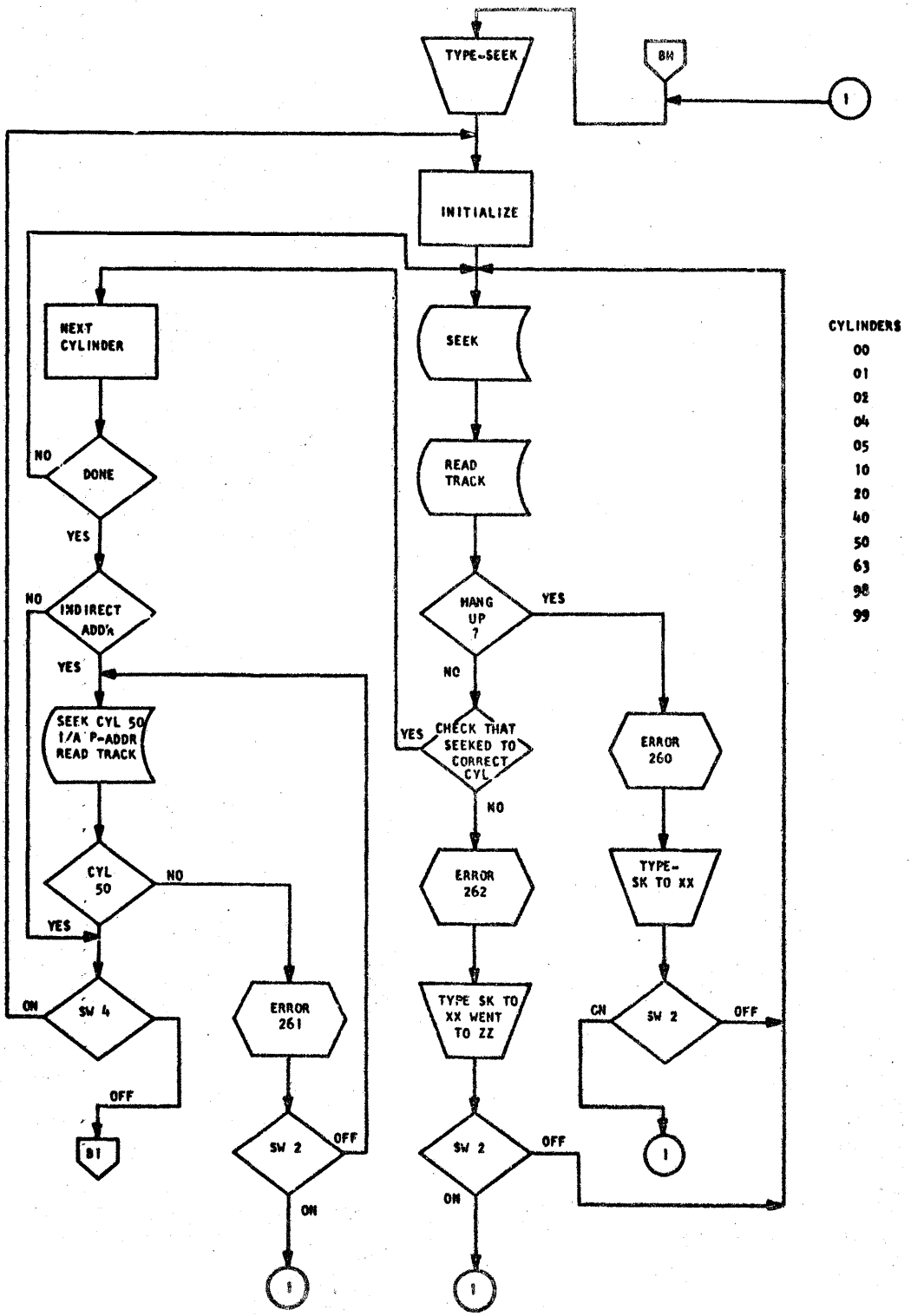

DT 0023
PN 2172366
EC 412531

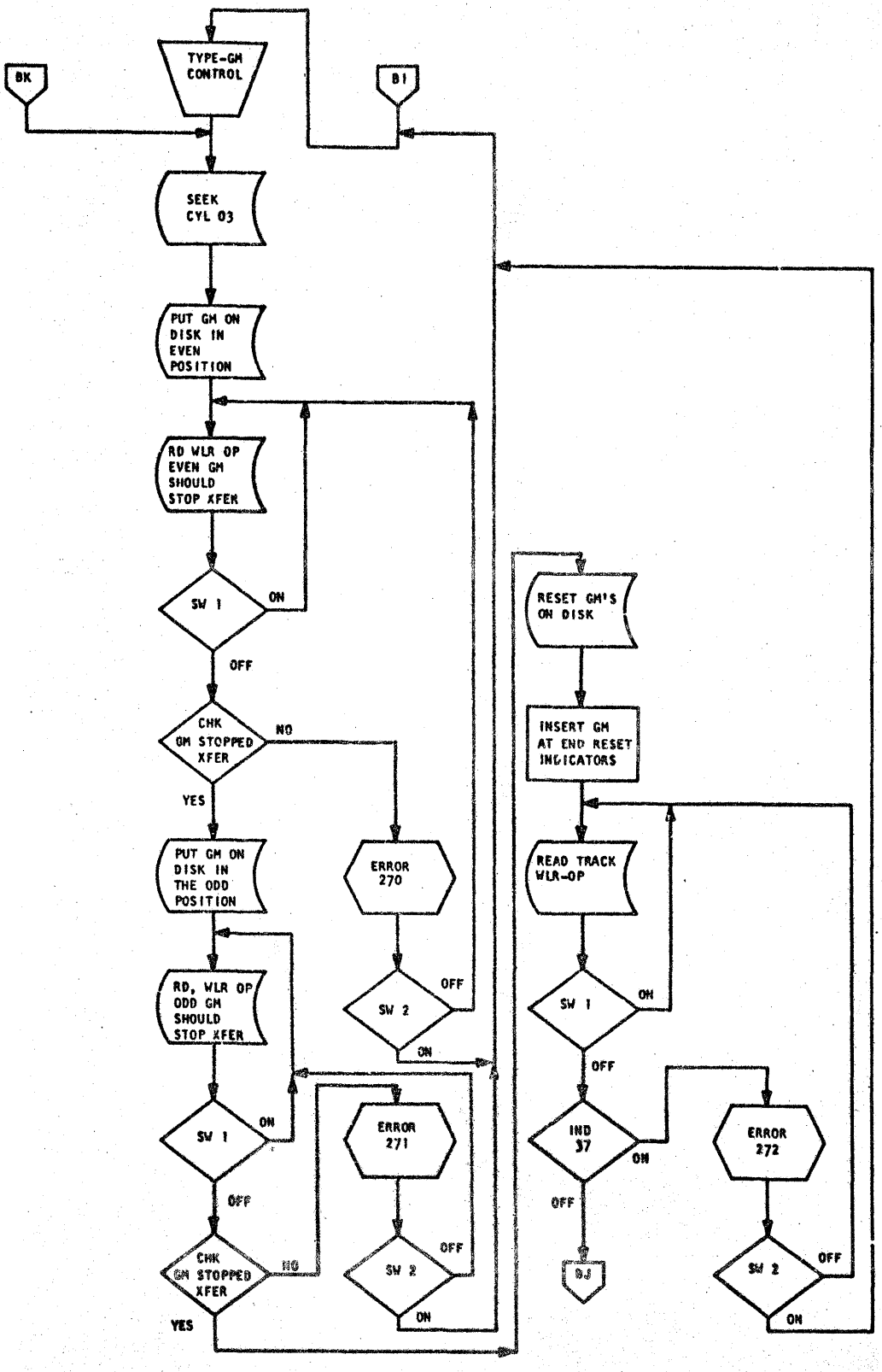

DT 0023
PN 2172366
EC 412531

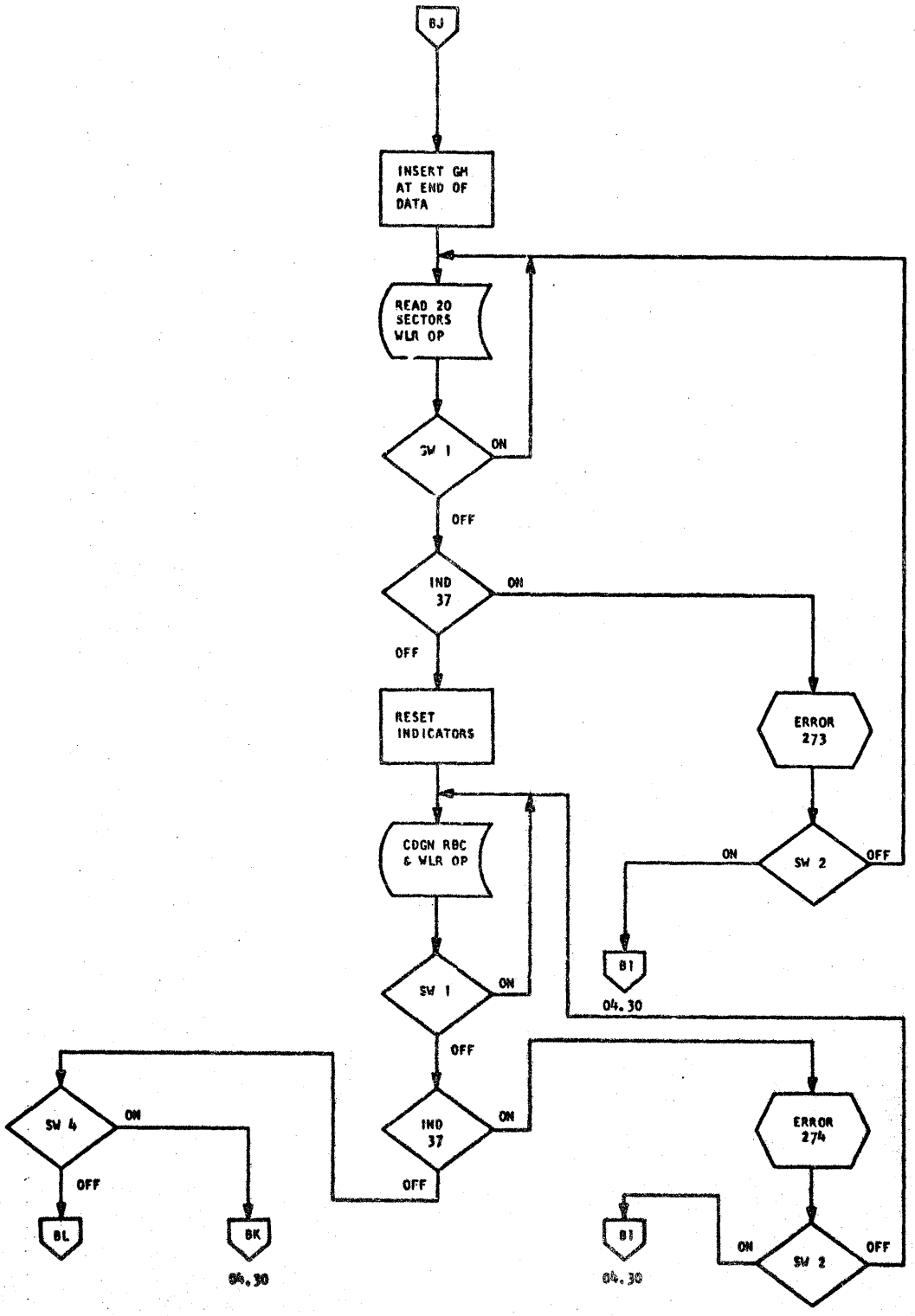
BJ
INSERT GM AT END OF DATA
READ 20 SECTORS WLR OP
SW 1
ON
OFF
IND 37
ON
OFF
RESET INDICATORS
ERROR 273
CDGN RBC & WLR OP
ON
SW 2
OFF
BI
04.30
SW 1
ON
OFF
SW 4
ON
OFF
IND 37
ON
OFF
ERROR 274
BL
BK
04.30
BI
04.30
ON
SW 2
OFF

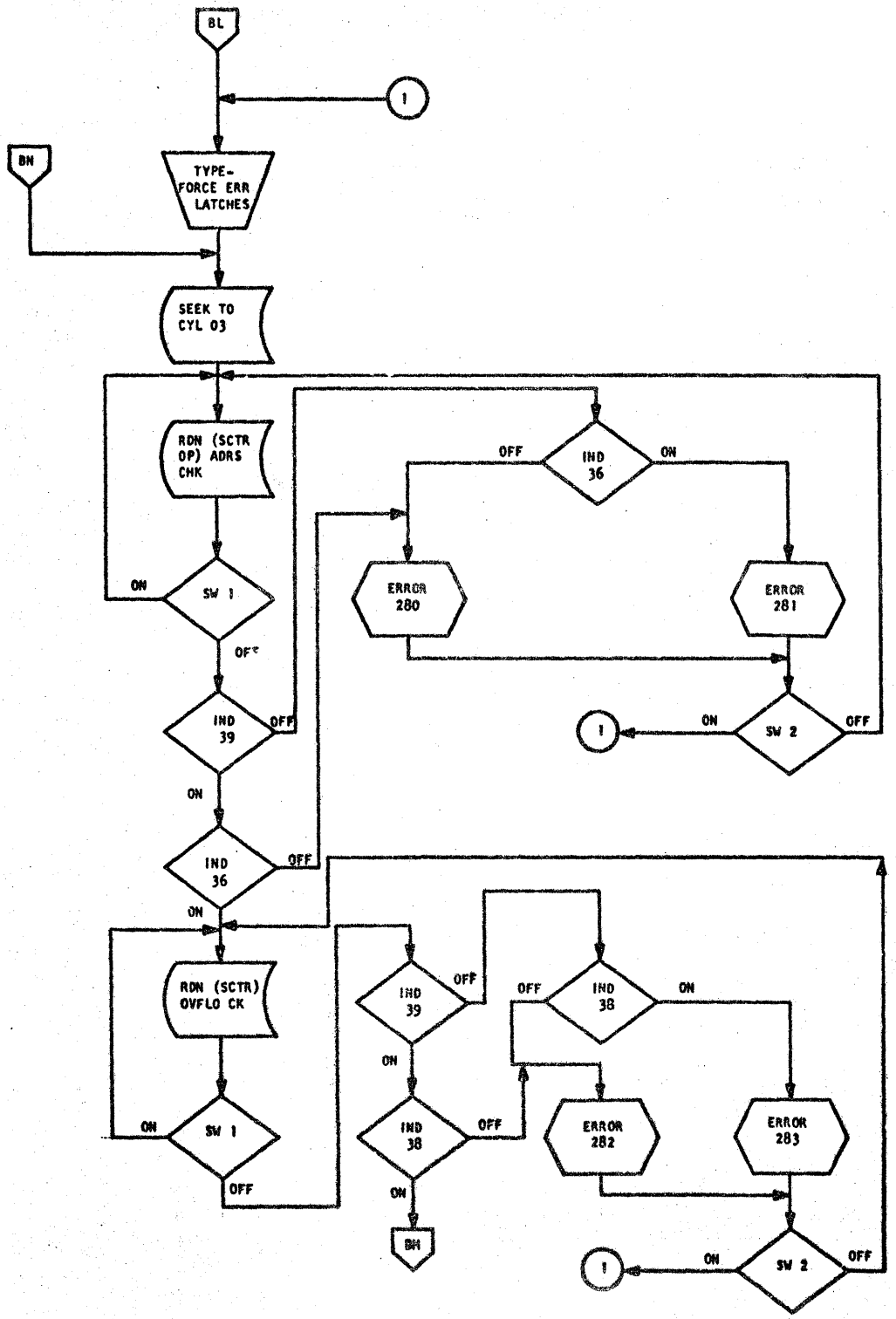
BL
1
BN
TYPE-
FORCE ERR
LATCHES
SEEK TO
CYL 03
RDN (SCTR
OP) ADRS
CHK
ON
SW 1
OFF
IND
39
OFF
ON
IND
36
OFF
ON
ERROR
280
ERROR
281
1
ON
SW 2
OFF
ON
IND
36
OFF
ON
RDN (SCTR)
OVFLO CK
ON
SW 1
OFF
IND
39
OFF
ON
IND
38
OFF
OFF
IND
38
ON
ERROR
282
ERROR
283
BH
1
ON
SW 2
OFF

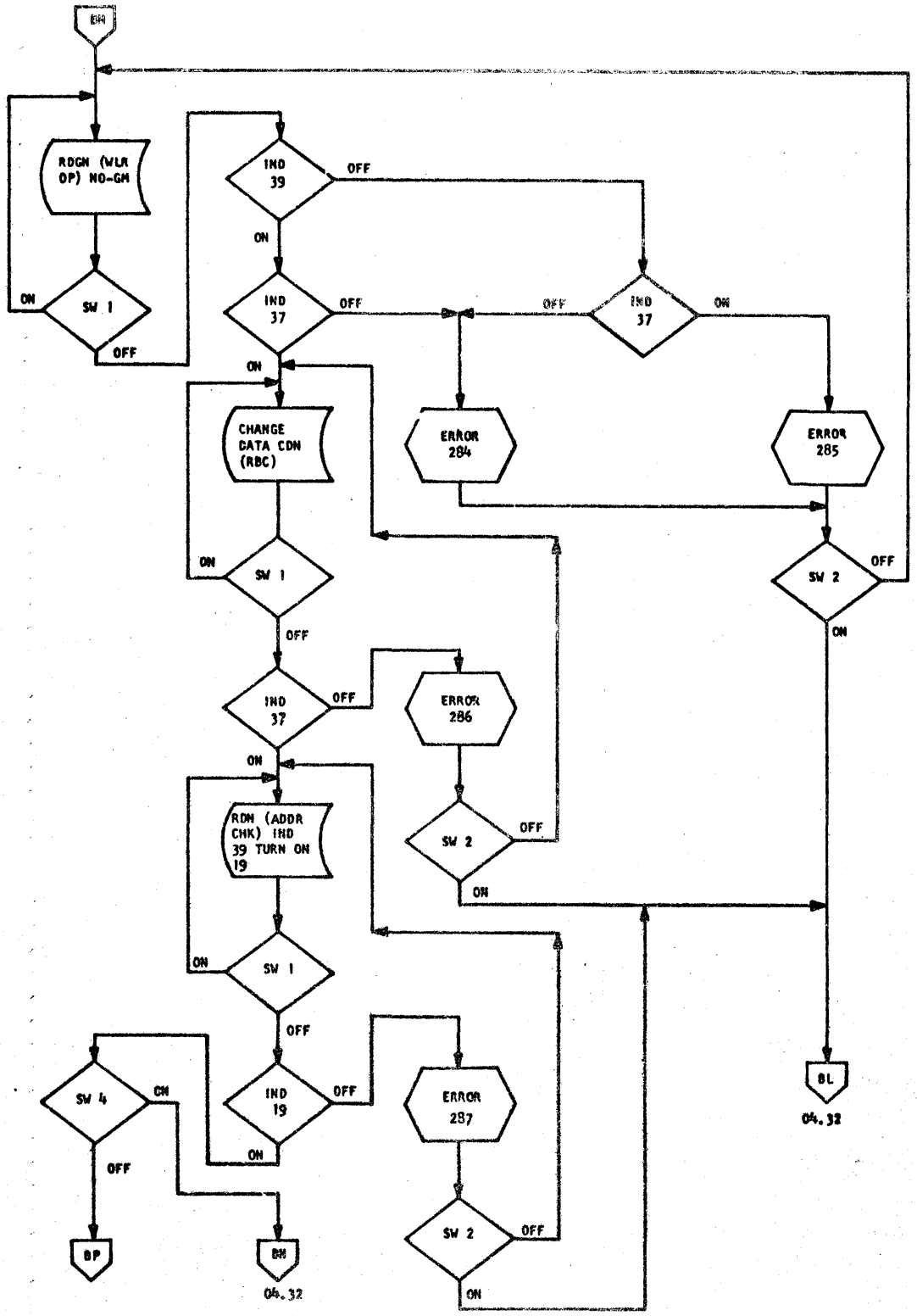

DT 0023
PN 2172366
EC 412531

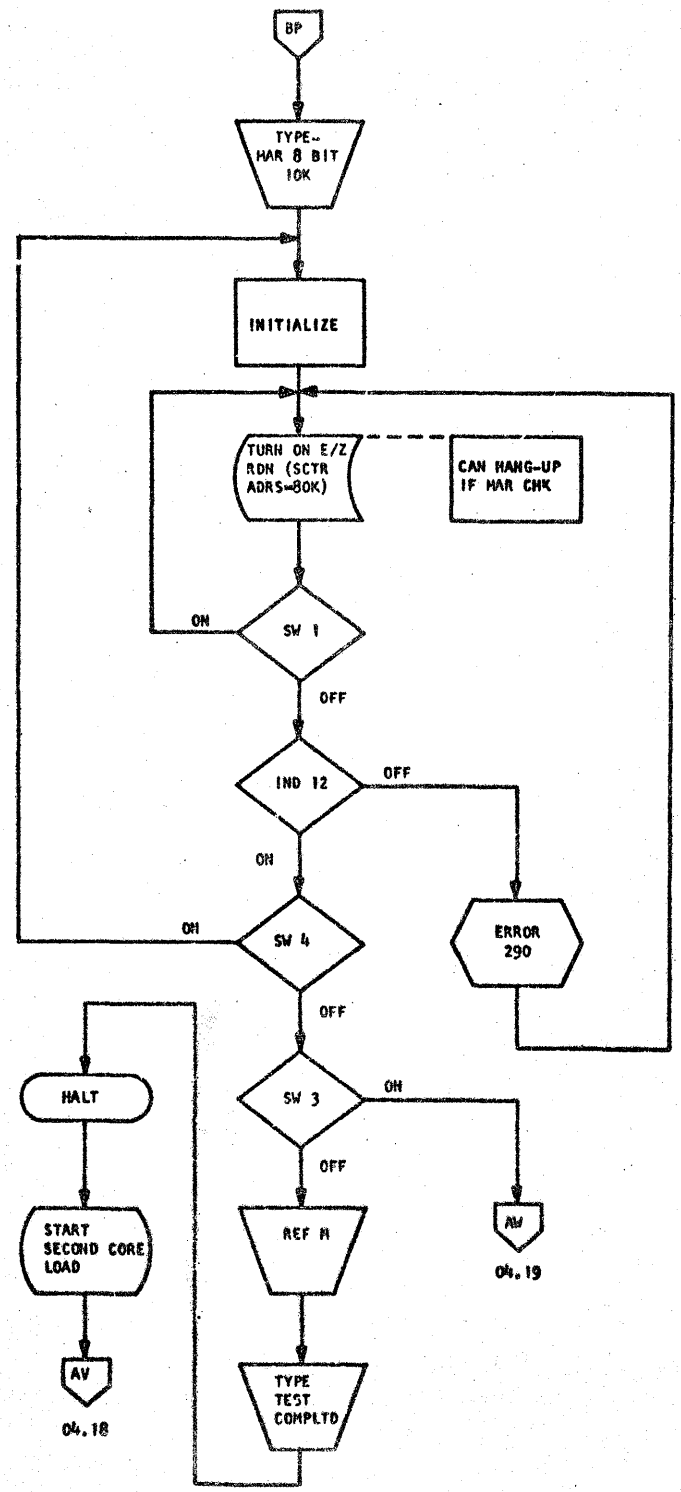

DT 0023
PN 2172366
EC 413531

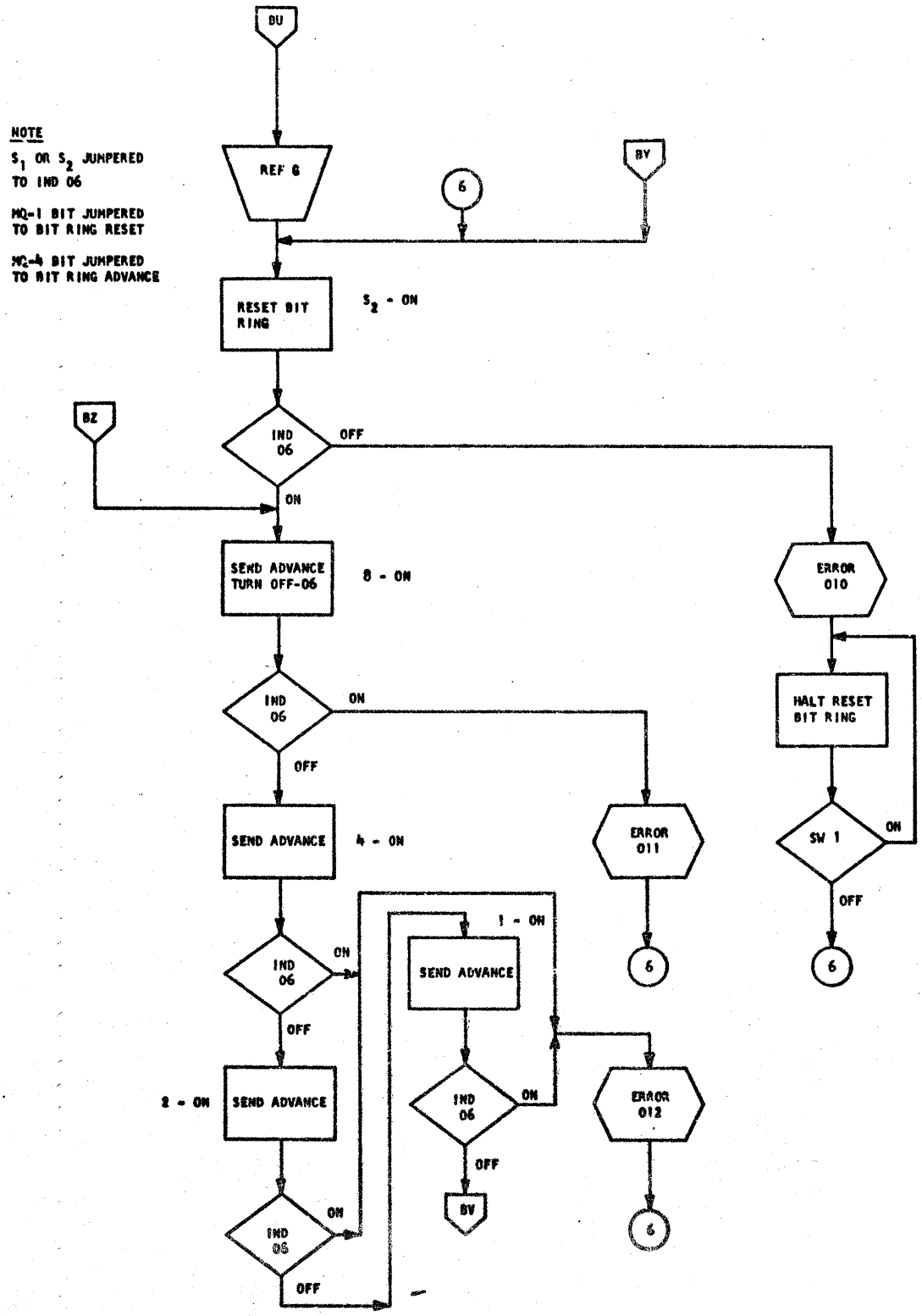

DT 0023
PN 2172366
EC 412531

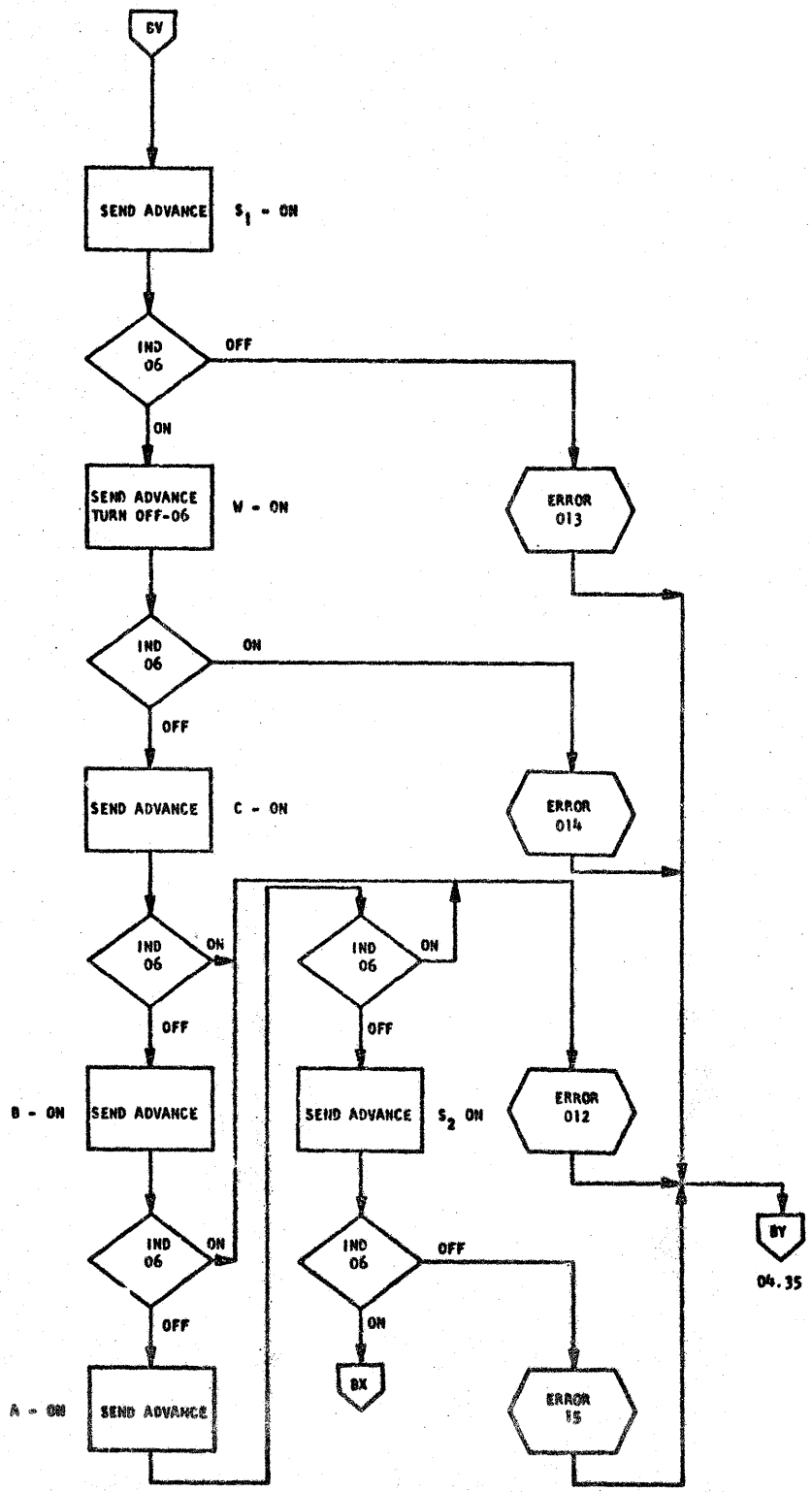

DT 0023
PN 2172366
EC 412531

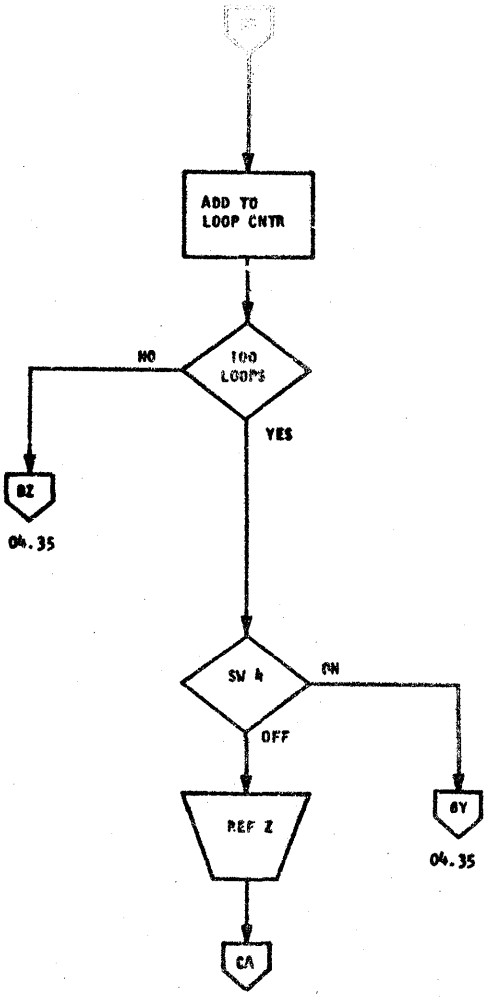
ADD TO
LOOP CNTR
NO
100
LOOPS
YES
BZ
04.35
SW 4
ON
OFF
REF Z
BY
04.35
CA

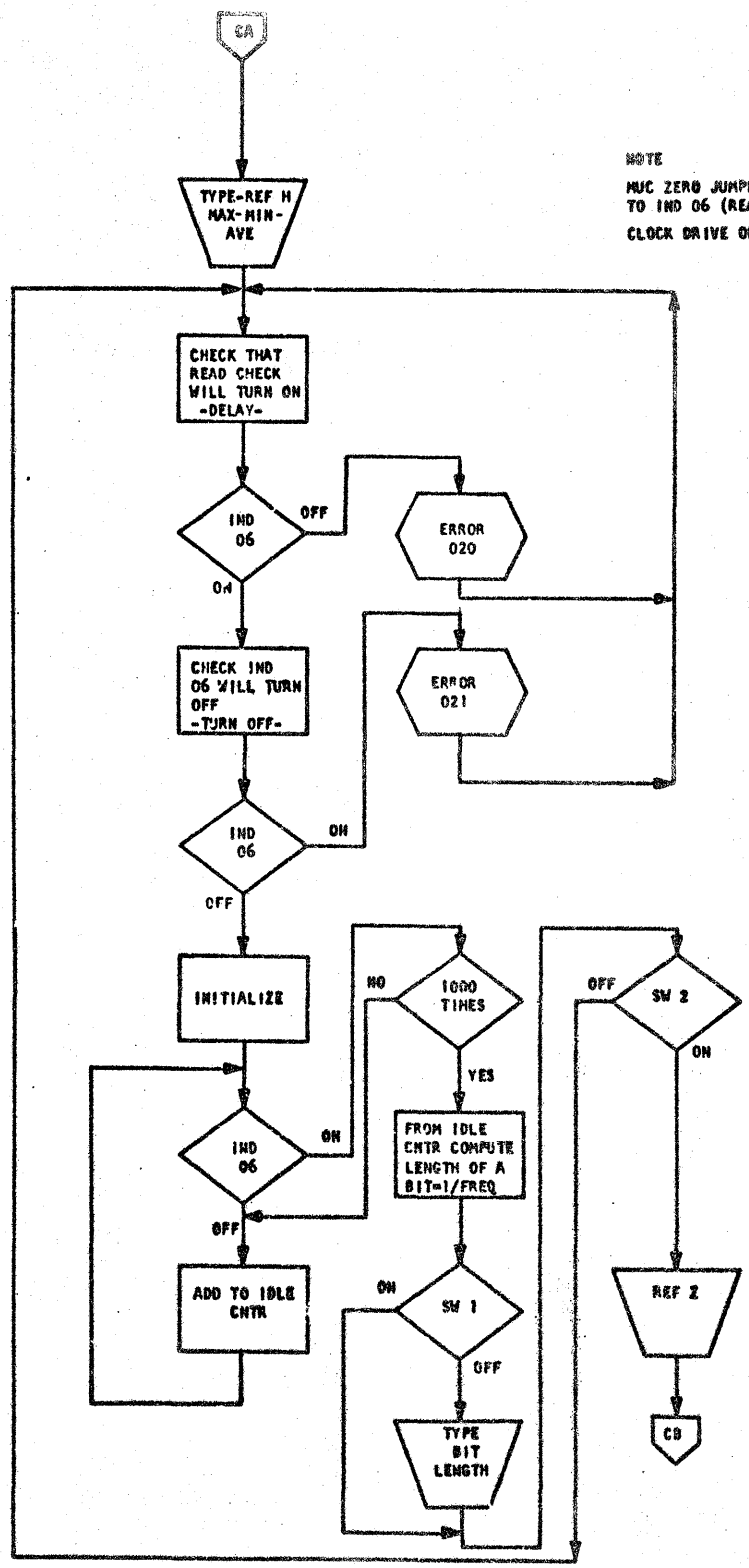

DT 0023
PN 2172466
EC 412531

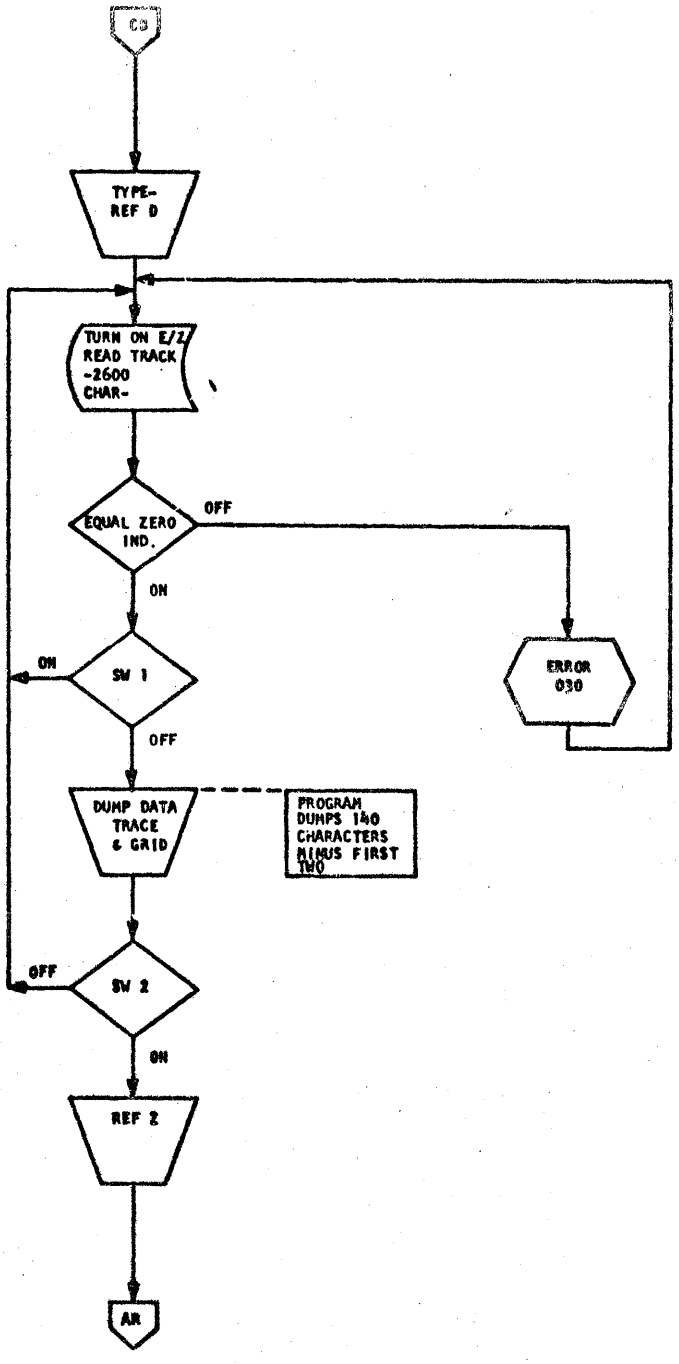

04.03

DT 0023
PN 2172366
EC 412531

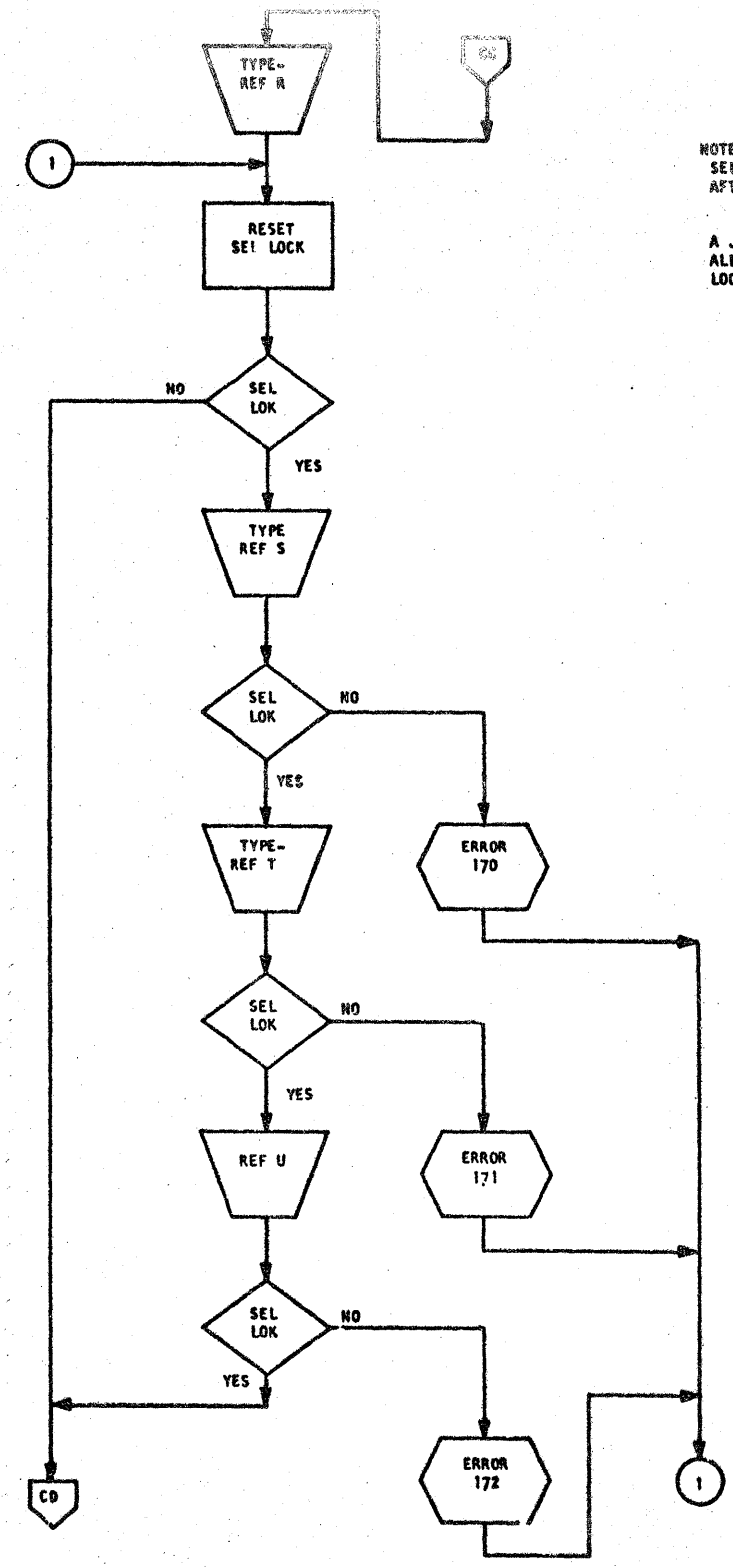

NOTE
SEL LOK MEANS AN ADDRESS CHECK AFTER A SEEK

A JUMPER FROM MAR 8 BIT 10K ALLOWS PRGM TO RESET SELECT LOCK LATCH

DT 0023
PN 2172366
EC 412531

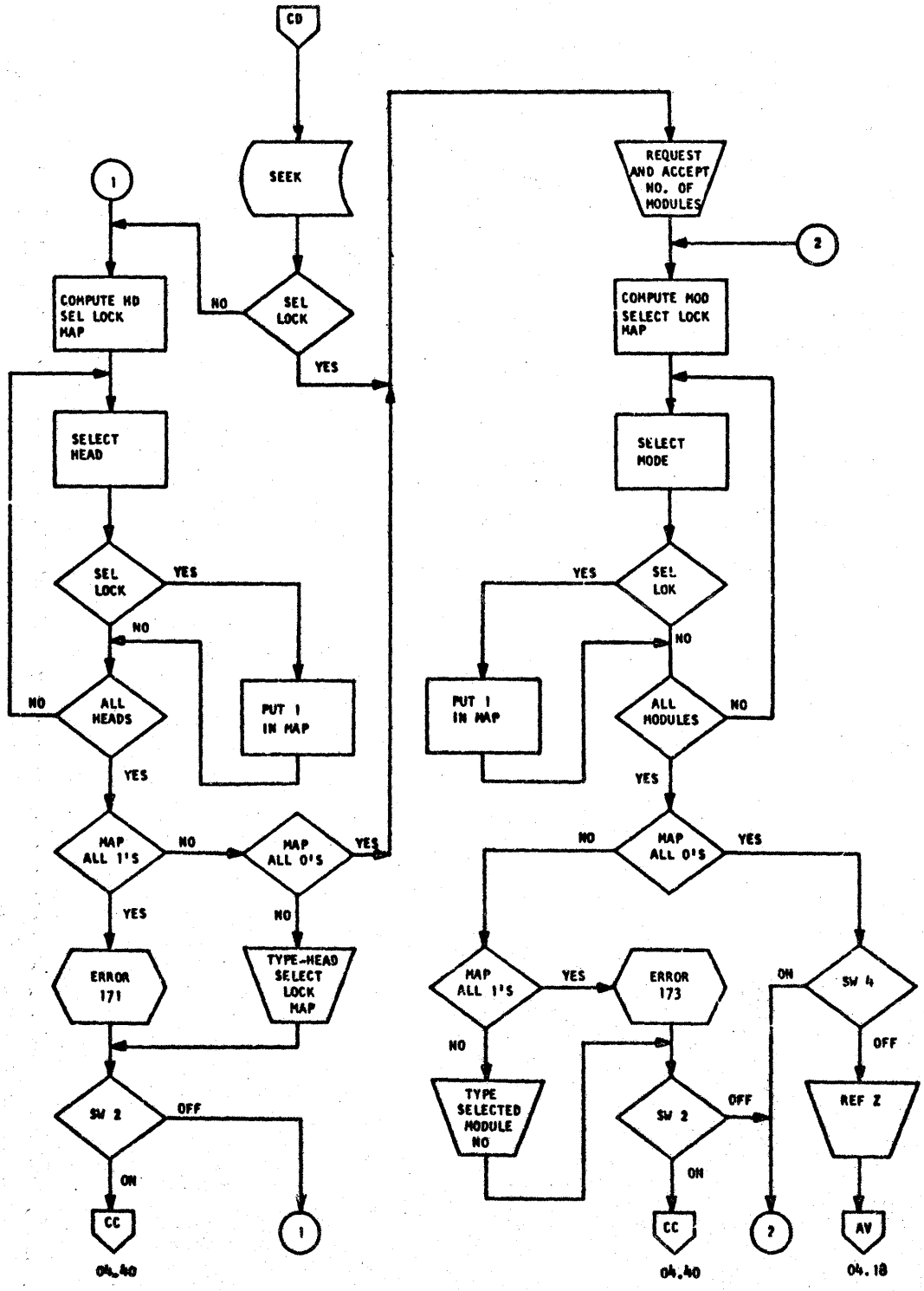

DT 0023
PN 2172366
EC 412531

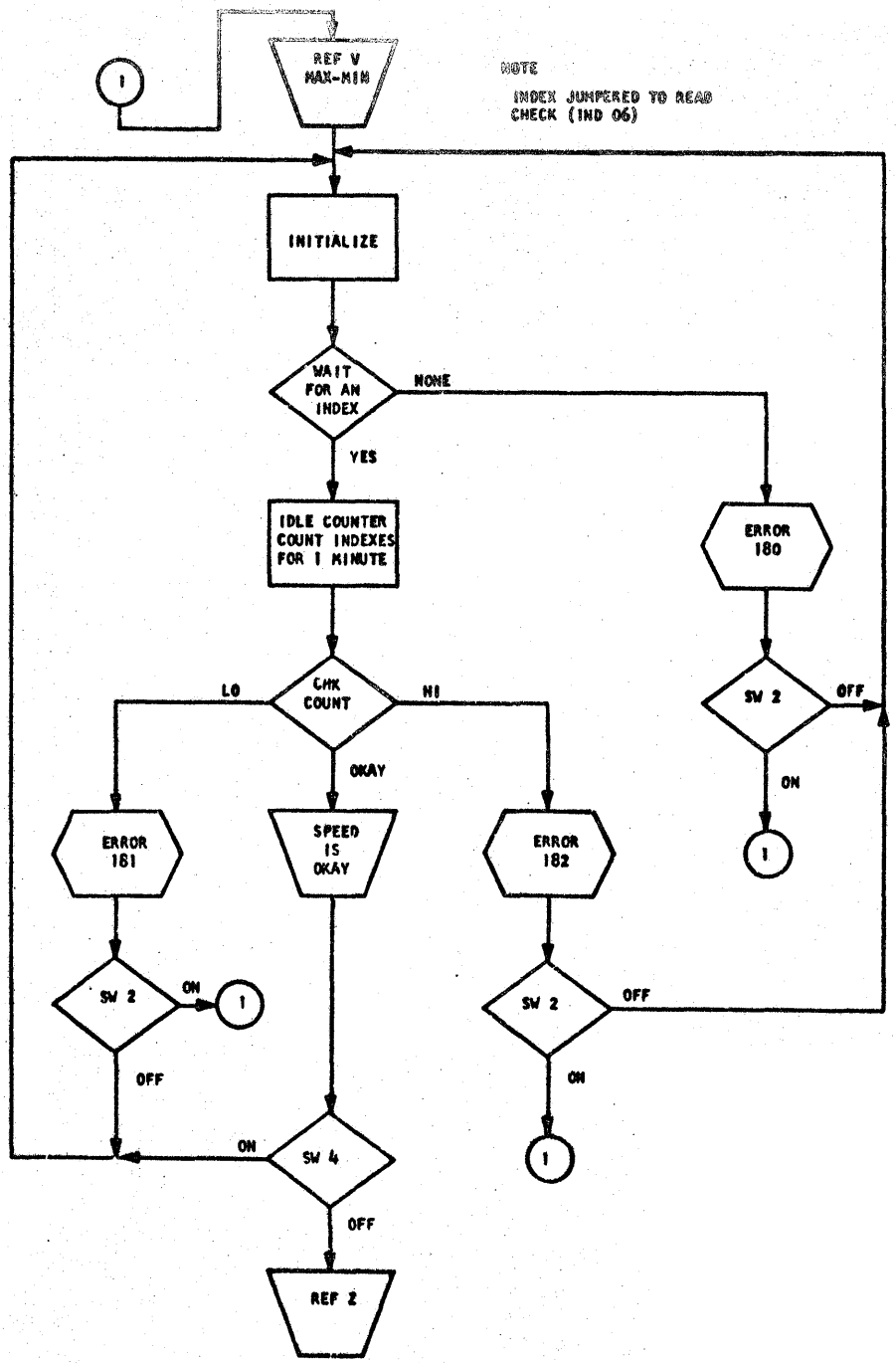

DT 0023
PN 2172366
EC 412531

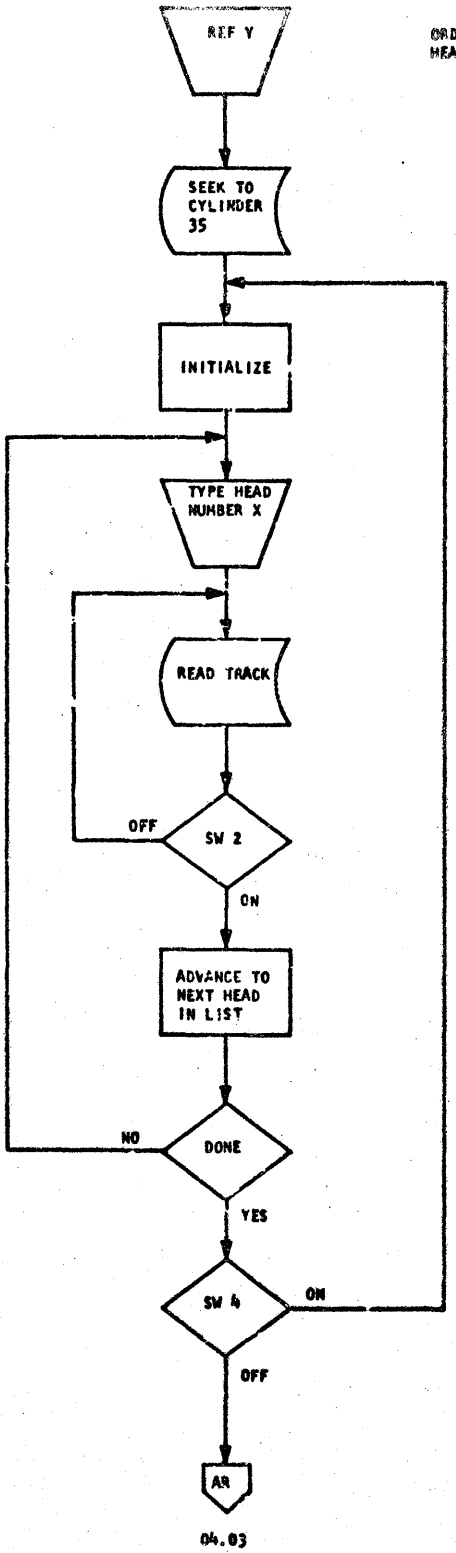

ORDER IN WHICH HEADS ARE READ

0
3
4
7
8
1
2
5
6
9

04.03

DT 0023
PN 2172366
EC 412531

DT 0023
1620-1/1311-3 Diagnostic Manual

Index to Program Listing

	Core Location	Page
Branch table (to enter routines)	00500-00580	05.01
C.E. Work Area (unused core)	14000-15000	05.01
Read In Area	15000	05.01
Routines (Main)		05.01
-First Core Load-		
Control	03616	05.09
1620 File Indicator Reset	04186	05.10
Branch No Group Mark	04506	05.11
Read I-Cycle Entry	04860	05.12
Flip MUC Triggers	06304	05.15
Normal File Indicator Reset	07238	05.17
Read Head Map	07666	05.18
-Second Core Load-		
Write I-Cycle Entry	03984	05.31
Blank Transfer	04496	05.33
Write/Read Data Transfer	05502	05.35
Write Head Map	08740	05.42
Compare Latch	09180	05.44
Restore Addresses	09612	05.45
Read Sector	09960	05.46
Seek	11234	05.49
Group Mark Control	12074	05.51
Force Error Latches	12762	05.53
MAR 8 bit 10 THOU	13446	05.54
Routines (Auxilliary)		
-First and Second Core Loads-		
Bit Ring	02134	05.05
Oscillator	01368	05.03
Scan	00776	05.02
-First Core Load-		
Select Lock	10432	05.24
Spindle Speed	12330	05.28
Head Alignment	13016	05.30

```
00010*
00020*                DIAGNOSTIC TEST  0023
00030*
00040*          THIS PROGRAM CHECKS THE IBM 1311 DISK
00050*          STORAGE DRIVE,MODEL 3 AS ATTACHED
00060*          TO THE IBM 1620 MOD ONE ONLY
00070*
00080*          ASSUMPTIONS-
00090*               THIS PROGRAM ASSUMES THAT THE BASIC
00100*               1620 CPU IS OPERATING PROPERLY AND
00110*               THAT THE USER IS FAMILIAR WITH THE
00120*               1311 DISK STORAGE DRIVE.
00130*
00140*          SCOPE-
00150*               THIS TEST IS DESIGNED TO DETECT AND
00160*               ISOLATE MALFUNCTIONS IN THE OPERATION
00170*               AND CONTROL OF THE 1311 DISK STORAGE DRIVE.
00180*
00190*
00200          DORG 00402                                          00402
00210 RSTRT    B    START                                          00402 49 03616 00000
00220          DC   01,',*-4                                       00409 00001
00230 LOAD2    NOP                                                 00414 41 00000 000C0
00240          RNCD                                                00426 36 00000 00500
00250          B                                                   00438 49 00000 00000
00260 LPCT     DC   02,00,*.                                       00449 00002
00270          DDA  00460,1,10000,20,RDAREA                        00460 00006 1J0000
                                                                   00466 00003 -20
                                                                   00469 00005 J5000
00280*
00290*          BRANCH TABLE FOR ENTERING THE VARIOUS ROUTINES
00300*
00310          DORG 500                                            00500
00320          B7   START,,,          GO TO START OF TEST          00500 49 03616 00000
00330          B7   SCAN1,,,          READ SCAN                    00508 49 00776 00000
00340          B7   RDOSC,,,          READ OSCILLATOR TEST         00516 49 01368 00000
00350          B7   BITRNG,,,         BIT RING TEST                00524 49 02134 00000
00360          B7   LOAD2,,,          LOAD CORE LOAD 2             00532 49 00414 00000
00370          B7   ALIGN,,,          HEAD ALIGNMENT               00540 49 13016 00000
00380          B7   ADJUST,,,         SPINDLE SPEED TEST           00548 49 12330 00000
00390          B7   SELOK,,,         SELECT LOCK TEST             00556 49 10432 00000
00400          B7   RT09,,,          SEEK TEST                    00564 49 11234 00000
00410          B7   RT08,,,          READ SECTOR                  00572 49 09960 00000
00420          B7   REST6,,,         RESTORE SCTR ADRS            00580 49 09612 00000
00430*
00440*
00450*          TO REPRODUCE THE PAPER TAPE
00460*          OF DIAGNOSTIC TEST 0023
00470*          -INSERT AND EXECUTE A BRANCH
00480*           TO THIS ROUTINE
00490*
```

```
00500 PAPER   RCTY                                                  00588 34 00000 00102
00510 TAPE    WATY RELOAD                                           00600 39 00717 00100
00520         H                                                     00612 48 00000 00000
00530         RNPT 20000-END1-100                                   00624 36 06618 00300
00540         DNPT 20000-END1-100                                   00636 35 06618 00200
00550         RNPT 20000-LAST-100                                   00648 36 05948 00300
00560         RAPT 00091                                            00660 37 00091 00300
00570         DNPT 20000-LAST-100                                   00672 35 05948 00200
00580         WAPT PNCHH                                            00684 39 00773 00200
00590         H                                                     006 6 48 00000 00000
00600         B7   *-12.                                           00708 49 00696 00000
00610 RELOAD  DAC  28,RELOAD PAPER TAPE IN READER'                  00717 00056
00620 PNCHH   DAC  02,H'                                            00773 00004
00630*
00640*              READ SCAN
00650*
00660 SCAN1   TFM  RSTRT+6,*,,          LOAD RESTART                00776 16 00408 -0776
00670         BTM  REFN,44,10,          GO TYPE REF   D             00788 17 03164 000M4
00680         H                                                     00800 48 00000 00000
00690 BOX     DC   02,0,*-6                                         00805 00002
00700 RCNT    DC   05,0,*-1                                         00810 00005
00710 DATAA   DGM  *                                                00811 00001
00720 SEVEN   TFM  CYL3+5,600                                       00812 16 03565 -0600
00730         SK   CYL3                                             00824 34 03560 00701
00740*
00750*
00760 SC1     BTM  SRESET,,,            RESET READ AREA             00836 17 01140 -0000
00770         BTM  RSTIND,,,            RESET IND                   00848 17 02904 -0000
00780*          READ TRACK,SUPER SECTOR 130 CHAR
00790         CM   *+11,0,10,           TURN ON E/Z                 00860 14 00871 000-0
00800         RTN  CYL3                                             00872 36 03560 00706
00810         BE   *+32,,,              E/Z ON = EXIT OK            00884 46 00916 01200
00820         BTM  ERRN,030,,           GO TYPE ERROR               00896 17 03220 -0030
00830         B7   *-60                                             00908 49 00848 00000
00840*          IF SW 1 IS ON,LOOP READ TRACK
00850         BC1  SC1,,,               SW 1 OFF/ON FOR TRACE       00916 46 00836 00100
00860         RCTY                                                  00928 34 00000 00102
00870         BTM  SDUMP,,,             GO DUMP TRACE DATA          00940 17 01036 -0000
00880         BTM  INDRST                                           00952 17 02904 -0000
00890         RCTY                                                  00964 34 00000 00102
00900         WATY GRID,,,              TYPE GRID                   00976 39 01227 00100
00910         BNC2 SC1,,,                                           00988 47 00836 00200
00920         BTM  REFN,69,10,          GO TYPE REF   Z             01000 17 03164 00009
00930         H                                                     01012 48 00000 00000
00940 RCONST  DC   06,011160,*                                      01023 00006
00950         B7   START                                            01024 49 03616 00000
00960*          DUMP 140 CHAR READ
00970         DS   5                                                01035 00005
00980 SDUMP   TFM  *+30,19860                                       01036 16 01066 J9860
00990         TFM  *+23,RDAREA+2                                    01048 16 01071 J5002
01000         TD   99999,99999,,        MOVE DATA                   01060 25 99999 99999
```

```
01010          AM    *-6,01,10                                    01072 11 01066 000-1
01020          AM    *-13,01,10                                   01084 11 01071 000-1
01030          CM    *-30,20000,,          CHK DONE               01096 14 01066 K0000
01040          BNE   *-48                                         01108 47 01060 01200
01050          DNTY  19860                                        01120 35 19860 00100
01060          BB2                                                01132 42 00000 00000
01070*           RESET READ AREA
01080          DS    5                                            01138 00005
01090 SRESET   TFM   *+18,RDAREA+9                                 01140 16 01158 J5009
01100          TF    99999,ZERO10,,        MOVE 0-S TO READ AREA  01152 26 99999 02897
01110          AM    *-6 ,10                                      01164 11 01158 -0010
01120          CM    *-18,19999,,,         CHK RESET DONE         01176 14 01158 J9999
01130          BI    *+12,1600                                    01188 46 01200 01600
01140          BI    *+12,1700                                    01200 46 01212 01700
01150          BNE   SRESET+12                                    01212 47 01152 01200
01160          BB2                                                01224 42 00000 00000
01170*
01180*           DATA FOR SCAN ROUTINE
01190*
01200 SCDMP    DS    ,19930                                       19930 00000
01210 GRID     DAC   40,          I          I          I         I
                                                                  01227 00080
01220          DAC   31,          I          I          I,        01307 00062
01230*
01240*                 READ OSCILLATOR ADJUSTMENT
01250*
01260*           CLOCK DRIVE RUNS RD/WR OSC
01270*           OSC RUNS BIT RING ( 10 BIT MODE )
01280*           BIT RING RUNS MUC ( S1 PULSES )
01290*           MUC ZERO TURNS ON 1620 READ CHK
01300*
01310 RDOSC    TFM   RSTRT+6,*,,           LOAD RESTART           01368 16 00408 -1368
01320          BTM   REFN,48,10,           GO TYPE REF    H       01380 17 03164 000M8
01330          RCTY                                               01392 34 00000 00102
01340          WATY  OSCT2                                        01404 39 01969 00100
01350          H                                                  01416 48 00000 00000
01360 MINCNT   DC    03,0,*-7                                     01420 00003
01370 MAXCNT   DC    06,0,*-1                                     01426 00006
01380*           CHECK RD CHK WILL TURN ON AND OFF
01390*           ALSO SYNC PROGRAM WITH FILE CLOCK
01400 STOSC    MM    *+9,01,810,           RESET  FILE            01428 13 01437 0-0-1
01410          BI    *+12,600,,            TURN OFF RD CK         01440 46 01452 00600
01420          TR    00100,00100,,         TIME                   01452 31 00100 00100
01430          TR    00100,00100,,           DELAY                01464 31 00100 00100
01440          BI    *+56,600,,            CHK FOR MUC ZERO       01476 46 01532 00600
01450          BTM   ERRN,020,,            GO TYPE ERROR          01488 17 03220 -0020
01460          NOP                                                01500 41 00000 00000
01470          NOP                                                01512 41 00000 00000
01480          B7    STOSC                                        01524 49 01428 00000
01490*
01500          BI    *+12,600,,            TURN OFF RD CK         01532 46 01544 00600
```

```
01510           BNI   RC1 ,600,,          CHK FOR                  01556 47 01612 00600
01520           BNI   RC1 ,600,,           SOLID MUC ZERO          01556 47 01612 00600
01530           BTM   ERRN,021,,          GO TYPE ERROR            01568 17 03220 -0021
01540           NOP                                                01580 41 00000 00000
01550           NOP                                                01592 41 00000 00000
01560           B7    STOSC                                        01604 49 01428 00000
01570*            SYNC PROGRAM WITH DISK CLOCK
01580 RC1       TFM   OVFLO,0,9                                    01612 16 01906 00-00
01590           TFM   MINCNT,0,10,        INITIALIZE               01624 16 01420 000-0
01600           TFM   MAXCNT,0,8                                   01636 16 01426 0-000
01610           BNI   *,600,,             SYNC PROGRAM             01648 47 01648 00600
01620*
01630           BNI   *+24,600                                     01660 47 01684 00600
01640           AM    MINCNT,01,10                                 01672 11 01420 000-1
01650           AM    MAXCNT,01,10,       IDLE CNTR                01684 11 01426 000-1
01660           BNI   *-12,600                                     01696 47 01684 00600
01670           AM    OVFLO,01,9,         DONE CNTR                01708 11 01906 00-01
01680           BNV   *-60                                         01720 47 01660 01400
01690*            COMPUTE  1/FREQ , LENGTH OF EACH BIT
01700 RC2       MM    MINCNT,07,10                                 01732 13 01420 000-7
01710           TF    OSCWA,99                                     01744 26 01959 00099
01720 RC3       MM    MAXCNT,17,10                                 01756 13 01426 000J7
01730           A     99,OSCWA,,          COMPUTE LENGTH           01768 21 00099 01959
01740 RC4       AM    99,18985,,            OF EACH BIT            01780 11 00099 J8985
01750           TF    OSCWA,99                                     01792 26 01959 00099
01760           M     OSCWA,OSCONT                                 01804 23 01959 02169
01770           AM    95,05,10,           ROUND OFF                01816 11 00095 000-5
01780           TD    BLNGTH+00,90                                 01828 25 02097 00090
01790           TD    BLNGTH+04,91                                 01840 25 02101 00091
01800           TD    BLNGTH+06,92,,      MOVE DIGITS TO O/P       01852 25 02103 00092
01810           TD    BLNGTH+08,93                                 01864 25 02105 00093
01820           TD    BLNGTH+10,94                                 01876 25 02107 00094
01830           BC1   *+36                                         01888 46 01924 00100
01840           RCTY                                               01900 34 00000 00102
01850 OVFLO     DC    04,0,*-5                                     01906 00004
01860           WATY  BLNGTH                                       01912 39 02097 00100
01870           BNC2  STOSC                                        01924 47 01428 00200
01880           BTM   REFN,69,10,         GO TYPE REF   Z          01936 17 03164 00009
01890           H                                                  01948 48 00000 00000
01900 OSCWA     DC    08,0,*                                       01959 00008
01910           B7    SCAN1                                        01960 49 00776 00000
01920*            DATA AND CONSTANTS
01930 OSCT2     DAC   45,BIT LNGTH SHD BE 1.4295 US. (MAX = 1.4310 US)
                                                                   01969 00090
01940           DAC   19, (MIN = 1.4280 US)'                       02059 00038
01950 BLNGTH    DAC   07,1.4399'                                   02097 00014
01960 TYBR      DAC   4,SENT                                       02111 00008
01970 TYBR1     DAC   08, 99 ADV'                                  02119 00016
01980*
01990*                      BIT RING TEST
02000*
```

```
02010*          THE NO 4 BIT IS USED TO PRINT OUT
02020*          S1 OR S2 OF BIT RING IS [illegible] TO DO SO
02030*          VARIOUS RESET LINES ARE JUMPERED
02040*
02050 BITRNG TFM   RSTRT+6,*,,        LOAD RESTART ADRS      02134 16 00408 -2134
02060        BTM   REFN,47,10,        GO TYPE REF   G        02146 17 03164 000M7
02070        H                                               02158 48 00000 00000
02080 OSCONT DC    06,015625,*                               02169 00006
02090        TDM   BR1+1,1,,          SET NOP TO NOP         02170 15 02507 00001
02100 BTB1   TFM   RCNT,000,,         SET PROG CNTR          02182 16 00810 -0000
02110        TFM   ADV,0,9,           RESET ADV CNTR         02194 16 02517 00-00
02120        MM    *+9,1,810,         RESET BIT RING         02206 13 02215 0-0-1
02130        BNI   BRER1,600,,        CHK FOR S2 = RESET OF RING
                                                             02218 47 02622 00600
02140 BTB2   BTM   PULSE,*,,          GO SEND BIT RING ADV     8
                                                             02230 17 02862 -2230
02150        BI    *+12,600,,         DUMMY TURN OFF         02242 46 02254 00600
02160        BI    BRER2,600,,        CHK FOR NO S1 OR S2    02254 46 02682 00600
02170        BTM   PULSE,*,,          GO SEND BIT RING ADV     4
                                                             02266 17 02862 -2266
02180        BI    BRER3,600,,        CHK BIT STUCK ON       02278 46 02706 00600
02190        BTM   PULSE,*,,          GO SEND BIT RING ADV     2
                                                             02290 17 02862 -2290
02200        BI    BRER3,600,,        CHK BIT STUCK ON       02302 46 02706 00600
02210        BTM   PULSE,*,,          GO SEND BIT RING ADV     1
                                                             02314 17 02862 -2314
02220        BI    BRER3,600,,        CHK BIT STUCK ON       02326 46 02706 00600
02230        BTM   PULSE,*,,          GO SEND BIT RING ADV     S1
                                                             02338 17 02862 -2338
02240        BNI   BRER4,600,,        CHK S1 TURNED ON       02350 47 02790 00600
02250        BTM   PULSE,*,,          GO SEND BIT RING ADV     W
                                                             02362 17 02862 -2362
02260        BI    *+12,600,,         DUMMY TURN OFF         02374 46 02386 00600
02270        BI    BRER5,600,,        CHK FOR ADV            02386 46 02814 00600
02280        BTM   PULSE,*,,          GO SEND BIT RING ADV     C
                                                             02398 17 02862 -2398
02290        BI    BRER3,600,,        CHK BIT STUCK ON       02410 46 02706 00600
02300        BTM   PULSE,*,,          GO SEND BIT RING ADV     B
                                                             02422 17 02862 -2422
02310        BI    BRER3,600,,        CHK BIT STUCK ON       02434 46 02706 00600
02320        BTM   PULSE,*,,          GO SEND BIT RING ADV     A
                                                             02446 17 02862 -2446
02330        BI    BRER3,600,,        CHK BIT STUCK ON       02458 46 02706 00600
02340        BTM   PULSE,*,,          GO SEND BIT RING ADV     S2
                                                             02470 17 02862 -2470
02350        BNI   BRER6,600,,        CHK S2 FLIPPING ON     02482 47 02838 00600
02360        TFM   ADV,0,9,           RESET ADV CNTR         02494 16 02517 00-00
02370 BR1    NOP   BTB1                                      02506 41 02182 00000
02380 ADV    DC    03,0,*,            ADVANCE CNTR           02517 00003
02390        AM    RCNT,01,10                                02518 11 00810 000-1
02400        CM    RCNT,0100,,        COUNT 0100 LOOPS       02530 14 00810 -0100
```

DT 0023
PN 2172366
EC 412531

```
02410          BNE   BTB2                                          02542 47 02230 01200
02420          BC1   BTB1                                          02554 46 02182 00100
02430          BC4   BTB1-12                                       02566 46 02170 00400
02440 BTB3     BTM   REFN,69,10,          GO TYPE REF   Z         02578 17 03164 00009
02450          H                                                   02590 48 00000 00000
02460          BC4   RSTRT                                         02602 46 00402 00400
02470          B7    RDOSC                                         02614 49 01368 00000
02480*           NO S2 ON BIT RING RESET
02490 BRER1    BTM   ERRN,010,,          GO TYPE ERROR             02622 17 03220 -0010
02500          NOP                                                 02634 41 00000 00000
02510          MM    *+9,01,810,         RESET RING                02646 13 02655 0-0-1
02520          BC1   *-12                                          02658 46 02646 00100
02530          B     BTB1-12,,,                                    02670 49 02170 00000
02540*           NO ADV (2),OR S1 OR S2 STUCK ON
02550 BRER2    BTM   ERRN,011,,          GO TYPE ERROR             02682 17 03220 -0011
02560          B     BRERR                                         02694 49 02850 00000
02570*         BIT RING TRIG STUCK ON
02580 BRER3    BTM   ERRN,012,711,,      GO TYPE ERROR             02706 17 03220 -001K
02590          BC1   BRERR,,,                                      02718 46 02850 00100
02600          TD    TYBR1+2,ADV-1,,       AND ADV CNTR            02730 25 02121 02516
02610          TD    TYBR1+4,ADV                                   02742 25 02123 02517
02620          WATY  TYBR,,,                                       02754 39 02111 00100
02630          H                                                   02766 48 00000 00000
02640          B     BRERR                                         02778 49 02850 00000
02650*         NO ADV (3),OR S1 NOT TURNING ON
02660 BRER4    BTM   ERRN,013,,          GO TYPE ERROR             02790 17 03220 -0013
02670          B     BRERR                                         02802 49 02850 00000
02680*         NO ADV (1),OR S1 STUCK ON
02690 BRER5    BTM   ERRN,014,,          GO TYPE ERROR             02814 17 03220 -0014
02700          B     BRERR                                         02826 49 02850 00000
02710*         S2 NOT FLIPPING ON
02720 BRER6    BTM   ERRN,015,,          GO TYPE ERROR             02838 17 03220 -0015
02730 BRERR    B7    BTB1                                          02850 49 02182 00000
02740*
02750*           THIS ROUTINE SENDS ONE BIT RING
02760*           ADVANCE AND ADDS 1 TO THE ADVANCE CNTR
02770          DS    5                                             02861 00005
02780 PULSE    MM    *+9,04,810,         MULT BY 4 = BIT RING ADV
                                                                   02862 13 02871 0-0-4
02790          AM    ADV,01,10,          ADD TO ADVANCE CNTR       02874 11 02517 000-1
02800          BB2   ,,,                 RETURN                    02886 42 00000 00000
02810*
02820*           ERROR ROUTINE FOR BIT RING
02830*
02840*
02850*
02860*
02870*           COMMON DATA AND ROUTINES BETWEEN
02880*           CORE LOAD 1 AND CORE LOAD 2
02890*
02900 ZERO10   DC    10,0,,,                                       02897 00010
```

```
02910*
02920*
02930*
02940*          THIS SUBROUTINE RESETS ALL THE
02950*          1620 ERROR INDICATORS. THE ROUTINE
02960*          IS ENTERED VIA A BTM (17).
02970*
02980           DS    5                                          02902 00005
02990 INDRST    BI    *+12,0600,,        RD CK                   02904 46 02916 00600
03000           BI    *+12,0700,,        WR CK                   02916 46 02928 00700
03010           BI    *+12,1600,,        MBR-E                   02928 46 02940 01600
03020           BI    *+12,1700,,        MBR-O                   02940 46 02952 01700
03030           BI    *+12,3600,,        ADRS CK                 02952 46 02964 03600
03040           BI    *+12,3700,,        RBC/WLR                 02964 46 02976 03700
03050           BI    *+12,3800,,        OVFLO CK                02976 46 02988 03800
03060           BB2                                              02988 42 00000 00000
03070 RSTIND    DS    ,INDRST                                    02904 00000
03080*
03090*          YES - NO ANSWERING ROUTINE
03100*          THE USER MUST TYPE
03110*          Y = YES   OR   N = NO
03120*          THEN RELEASE AND START
03130*
03140           DS    5                                          02994 00005
03150 YESNO     TF    MZ+6,*-1,,      INIT                       02996 26 03062 02995
03160           TF    MR+6,*-13,,         IALIZE                 03008 26 03076 02995
03170           RATY  ANS,,,               ACCEPT ANSWER         03020 37 03085 00100
03180           CM    ANS,68,10,           CHK FOR YES           03032 14 03085 00008
03190           BE    MR                                         03044 46 03070 01200
03200 MZ        TDM   99999,0,,       INSERT 0                   03056 15 99999 00000
03210           BB2                                              03068 42 00000 00000
03220 MR        TD    99999,RM,,      INSERT RM                  03070 25 99999 03545
03230           BB2   ,,,             RETURN                     03082 42 00000 00000
03240 ANS       DAC   03,XXX                                     03085 00006
03250*
03260*          GENERAL OUTPUT ROUTINE FOR TYPING - ADDRESS AND MESSAGES
03270*
03280           DS    5                                          030 4 00005
03290 TYPE      BI    *+60,00300,,,   BYPASS NORM TYPE OUT FOR LOOP
                                                                 03096 46 03156 00300
03300           RCTY                                             03108 34 00000 00102
03310           WNTY  RSTRT+2,,,            TYPE ROUTINE LOCATION 03120 38 00404 00100
03320           TF    *+18,TYPE-1                                03132 26 03150 03095
03330           WATY  99999,,,              TYPE MESSAGE         03144 39 99999 00100
03340           BB2                                              03156 42 00000 00000
03350*
03360*                    REFERENCE NUMBER
03370*          THIS ROUTINE TYPES THE REFERENCE NUMBER.
03380*          IT IS ENTERED VIA A BTM (17).
03390*          THE Q-FIELD CONTAINS ALPHA CODE
03400*
```

```
03410          DS    5                                                03162 00005
03420 REFN     RCTY                                                   03164 34 00000 00102
03430          WNTY  RSTRT+2,,,          TYPE ROUT LOCATION           03176 38 00404 00100
03440          TF    REF+16,REFN-1                                    03188 26 03395 03163
03450          WATY  REF,,,              TYPE REFERENCE NO.           03200 39 03379 00100
03460 REFN1    BB2                                                    03212 42 00000 00000
03470*
03480*                     ERROR NUMBER
03490*           THIS ROUTINE TYPES THE ERROR NUMBERS.
03500*           IT IS ENTERED VIA A BTM (17).
03510*           THE Q-FIELD CONTAINS THE ERROR CODE.
03520*
03530          DS    5                                                03218 00005
03540 ERRN     SF    RSTRT+3                                          03220 32 00405 00000
03550          BC1   ERRN1                                            03232 46 03376 00100
03560          RCTY                                                   03244 34 00000 00102
03570 NOMOD    DC    02,0,*-8                                         03247 00002
03580          BNF   *+36,ERRN-1                                      03256 44 03292 03219
03590          TDM   ERRN1-23,1                                       03268 15 03353 00001
03600          CF    ERRN-1                                           03280 33 03219 00000
03610          WNTY  RSTRT+2,,,          TYPE ROUTINE LOC             03292 38 00404 00100
03620          TD    ERR+14,ERRN-3                                    03304 25 03417 03217
03630          TD    ERR+16,ERRN-2,,,    INSERT ERROR NO.             03316 25 03419 03218
03640          TD    ERR+18,ERRN-1                                    03328 25 03421 03219
03650          WATY  ERR,,,              TYPE ERROR NUMBER            03340 39 03403 00100
03660          H                                                      03352 48 00000 00000
03670 MCNT     DS    ,*                                               03363 00000
03680          TDM   *-11,8                                           03364 15 03353 00008
03690 ERRN1    BB2                                                    03376 42 00000 00000
03700 REF      DAC   12, - REF  X  '                                  03379 00024
03710 ERR      DAC   13, - ERR 999  '                                 03403 00026
03720 EXIT     DAC   06, EXIT'                                        03429 00012
03730 TSWC31   DAC   31,ARE HEADS AT CYL 03,TYPE Y-N  '               03441 00062
03740 MBRE     DAC   06,EVEN '                                        03503 00012
03750 MBRO     DAC   05,ODD '                                         03515 00010
03760 RDCK     DAC   07,RD CK '                                       03525 00014
03770 PSW      DS    ,REFN+3                                          03167 00000
03780          DC    02,'                                             03539 00002
03790          DC    01,'                                             03540 00001
03800          DC    01,'                                             03541 00001
03810          DC    01,'                                             03542 00001
03820          DC    01,'                                             03543 00001
03830          DC    01,'                                             03544 00001
03840 RMRST    DC    01,'                                             03545 00001
03850 RM       DS    ,RMRST                                           03545 00000
03860 CYLZ     DDA   ,1,,1,RDAREA                                     03546 00006 1-0000
                                                                      03552 00003 -01
                                                                      03555 00005 J5000
03870 CYL3     DDA   ,1,780,20,RDAREA                                 03560 00006 1-0780
                                                                      03566 00003 -20
                                                                      03569 00005 J5000
```

```
03880 ADRSCK DDA  ,1,77777,1,RDAREA                    03576 00006 AP7777
                                                       03580 00003 -01
                                                       03583 00005 J5000
03890 DCFSC0 DDA  ,1,,,RDAREA                          03588 00006 1-0000
                                                       03594 00003 -00
                                                       03597 00005 J5000
03900 RESET  DDA  ,1,SCTR+80000,0,RDAREA               03602 00006 1R0000
                                                       03608 00003 -00
                                                       03611 00005 J5000
03910*
03920*                    CONTROL
03930*
03940*          THIS ROUTINE DOES THE FOLLOWING-
03950*               TYPES THE TEST NAME
03960*               TYPES SWITCH SETTINGS
03970*               TYPES PERTINENT OPERATING INSTRUCTIONS
03980*               ALLOWS THE KEYING IN OF ESSENTIAL INFORMATION
03990*
04000 START  TFM  RSTRT+6,*,,          LOAD RESTART ADRS    03616 16 00408 -3616
04010        RCTY                                           03628 34 00000 00102
04020        RCTY                                           03640 34 00000 00102
04030        WATY TSTNAM,,,            TYPE TEST NAME       03652 39 04009 00100
04040        RCTY                                           03664 34 00000 00102
04050        WATY SETSW,,,             TYPE SW SETTINGS     03676 39 04051 00100
04060*
04070*          REQUEST AND ACCEPT MODULE NUMBER
04080*
04090        RCTY                                           03688 34 00000 00102
04100        WATY RQTMN,,,             REQUEST MOD NO.      03700 39 04123 00100
04110        RNTY NOMOD                                     03712 36 03247 00100
04120        BC4  *-36,,,              OOPS SW              03724 46 03688 00400
04130        RCTY                                           03736 34 00000 00102
04140*
04150*          COMPUTE DISK DRIVE DIGIT FROM MODULE NO.
04160*
04170        MM   NOMOD,02,10,         MULT BY  2           03748 13 03247 000-2
04180        AM   99,01,10,            ADD 1                03760 11 00099 000-1
04190        TD   00460,99,,           PLACE                03772 25 00460 00099
04200        TD   CYL2,99,,             THE                 03784 25 03546 00099
04210        TD   CYL3,99,,              DISK               03796 25 03560 00099
04220        TD   ADRSCK,99,,             DRIVE             03808 25 03574 00099
04230        TD   DCFSC0,99,,              DIGIT            03820 25 03588 00099
04240        TD   DCFTK,99,,                 IN             03832 25 06290 00099
04250        TD   BRDX4,99,,                  EACH          03844 25 10046 00099
04260        TD   CYL35,99,,                    DISK CONTROL FIELD
                                                            03856 25 13252 00099
04270*
04280*               FIRST PASS ONLY
04290*          TYPE REFERENCE NUMBER (REF NO) TO
04300*          FORCE USER TO GO TO DOCUMENTATION.
04310*          AFTER TYPING REF NO.,THE CPU WILL
```

```
04320*          HANG-UP AND THE USER CAN READ DOCS
04330*          TO FIND OUT HOW TO GET GOING.
04340*
04350*
04360 NOP1      NOP   RT02                                          03868 41 04186 00000
04370           BTM   REFN,41,10,          GO TYPE REF   A          03880 17 03164 000M1
04380*          FORCE HANG-UP CONDITION
04390 GOOF      TFM   RSTRT+6,*                                     03892 16 00408 -3892
04400           CM    *+11,0,10,           TURN ON E/Z LATCH        03904 14 03915 000-0
04410           RN    CYL3,708,,           ILLEGAL OP - SHOULD STOP CLOCK
                                                                    03916 36 03560 00708
04420           BNE   CEOK                                          03928 47 03988 01200
04430*          E/Z TRIG ON - FAILED TO HANG-UP
04440           BTM   ERRN,100,,           TYPE ERROR NO. 100       03940 17 03220 -0100
04450           RN    CYL3,708,,           DIAG. LOOP               03952 36 03560 00708
04460           BC1   *-12                                          03964 46 03952 00100
04470           B     RSTRT                                         03976 49 00402 00000
04480 CEOK      TDM   NOP1+1,9,,           CHANGE NOP TO B          03988 15 03869 00009
04490           B7    RT02                                          04000 49 04186 00000
04500*
04510*          DATA,TYPEOUTS,AND CONSTANTS
04520*
04530 TSTNAM    DAC   21,DIAGNOSTIC TEST 0023'                      04009 00042
04540 SETSW     DAC   36,TURN ALL SWITCHES OFF OR TO PROGRAM'       04051 00072
04550 RQTMN     DAC   32,KEY IN MODULE NO. PACK IS ON    '          04123 00064
04560*
04570*
04580*                    INDICATOR RESET
04590*
04600*          THIS ROUTINE RESETS ALL THE 1620 INDICATORS
04610*          WITH A BI (46) INSTRUCTION AND CHECKS THAT
04620*          THE DISK STORAGE INDICATORS- ADRS CHK (36),
04630*          WLR/RBC CHK (37),OVFLO CHK (38),AND ANY
04640*          FILE CHK (39) AND WRITE CHECK (07)
04650*          AND READ CHECK (06) ARE INDEED TURNED OFF.
04660*
04670 RT02      TFM   RSTRT+6,*,,          LOAD RESTART ADRS        04186 16 00408 -4186
04680           BTM   TYPE,ZZ1 ,,          TYPE  FILE IND RESET     04198 17 03096 -4795
04690           BTM   INDRST,*,,           GO RESET IND             04210 17 02904 -4210
04700           BNI   *+36,03600,,         ADRS CK                  04222 47 04258 03600
04710           BTM   ERRN,110,711,,       GO TYPE ERROR 110        04234 17 03220 -011-
04720           NOP                                                 04246 41 00000 00000
04730           BNI   *+36,03700,,         WLR/RBC CK               04258 47 04294 03700
04740           BTM   ERRN,111,711,        GO TYPE ERROR 111        04270 17 03220 -011J
04750           NOP                                                 04282 41 00000 00000
04760           BNI   *+36,03800,,         OVFLO CK                 04294 47 04330 03800
04770           BTM   ERRN,112,711,        GO TYPE ERROR 112        04306 17 03220 -011K
04780           NOP                                                 04318 41 00000 00000
04790           BNI   *+36,03900,,         ANY FILE                 04330 47 04366 03900
04800           BTM   ERRN,113,711,        GO TYPE ERROR 113        04342 17 03220 -011L
04810           NOP                                                 04354 41 00000 00000
```

```
04820        BNI   *+36,600,,          READ CK                  04366 47 04402 00600
04830        BTM   ERRN,114,711,       GO TYPE ERROR 114        04378 17 03220 -011M
04840        NOP                                                043 0 41 00000 00000
04850        BNI   *+36,700,,          WRITE CK                 04402 47 04438 00700
04860        BTM   ERRN,115,711,       GO TYPE ERROR 115        04414 17 03220 -011N
04870        NOP                                                04426 41 00000 00000
04880        BC4   RT02+24                                      04438 46 04210 00400
04890        BNF   RT2B,RSTRT+3,,                               04450 44 04506 00405
04900        BC1   *+24,,,                                      04462 46 04486 00100
04910        H                                                  04474 48 00000 00000
04920        BNC2  RT02+24                                      04486 47 04210 00200
04930        B7    RSTRT,,,                                     04498 49 00402 00000
04940*
04950*
04960*          THIS ROUTINE CHECKS THE BRANCH NO
04970*          GROUP MARK INSTRUCTION ( BNG - 55 )
04980*               PHASE      DATA     BRANCH
04990*                 A         GM        NO
05000*                 B         0         YES
05010*                 C         7         YES
05020*                 D         RM        YES
05030*
05040 RT2B   TFM   RSTRT+6,*,,         LOAD RESTART             04506 16 00408 -4506
05050        BTM   TYPE,ZZ2 ,,         TYPE  BRCH NO GM         04518 17 03096 -4837
05060        TFM   LPCT,0,10                                    04530 16 00449 000-0
05070*          PHASE  A  DATA = GM    SHD NOT BRCH
05080 R2A    BNG   *+20,DATAA,,        DATAA = GM               04542 55 04562 00811
05090        B7    R2B                                          04554 49 04586 00000
05100        BTM   ERRN,120,711,       GO TYPE ERROR 120        04562 17 03220 -012-
05110        NOP                                                04574 41 00000 00000
05120*          PHASE B   DATA = 0    SHD BRCH
05130 R2B    BNG   *+36,DATAB,,        DATAB = 0                04586 55 04622 04790
05140        BTM   ERRN,121,711,       GO TYPE ERROR 121        04598 17 03220 -012J
05150        NOP                                                04610 41 00000 00000
05160*          PHASE C   DATA = 7    SHD BRCH
05170 R2C    BNG   *+36,DATAC,,        DATAC = 7                04622 55 04658 04791
05180        BTM   ERRN,122,711,       GO TYPE ERROR 122        04634 17 03220 -012K
05190        NOP                                                04646 41 00000 00000
05200*          PHASE D   DATA = RM    SHD BRCH
05210 R2D    BNG   *+36,DATAD,,        DATAD = RM               04658 55 04694 04792 49
05220        BTM   ERRN,123,711,       GO TYPE ERROR 123        04670 17 03220 -012L
05230        NOP                                                04682 41 00000 00000 0463
05240*
05250        AM    LPCT,01,10                                   04694 11 00449 000-1
05260        BNV   R2A,,,              LOOP CNTRL               04706 47 04542 01400
05270        BC4   RT2B+24                                      04718 46 04530 00400
05280        BNF   RT03,RSTRT+3                                 04730 44 04860 00405
05290        BC1   *+24,,,                                      04742 46 04766 00100
05300        H                                                  04754 48 00000 00000
05310        BNC2  ,R2A,,                                       04766 47 00000 00242
05320        B     RT02,,,                                      04778 49 04186 00000
```

```
05330*
05340*
05350*          DATA
05360 DATAB   DSC   01,0                                          04790 00001
05370 DATAC   DSC   01,7                                          04791 00001
05380 DATAD   DC    01,'                                          04792 00001
05390 ZZ1     DAC   21,-1620 FILE IND RESET'                      04795 00042
05400 ZZ2     DAC   12,-BRCH NO GM'                               04837 00024
05410*
05420*                        I CYCLE ENTRY
05430*
05440*          THIS ROUTINE CHECKS THAT EACH DISK
05450*          INSTRUCTION WILL GIVE A FILE EXIT
05460*          OR I-CYCLE ENTRY.
05470*
05480 RT03    TFM   RSTRT+6,*,,          LOAD RESTART ADRS      04860 16 00408 -4860
05490         BTM   TYPE,ZZ3 ,,          TYPE  READ I-CYCLE ENTRY
                                                                04872 17 03096 -6259
05500         TFM   LPCT,90,10                                  04884 16 00449 000R0
05510 LP1     CM    *+11,0,10,           TURN ON E/Z IND        04896 14 04907 000-0
05520         RDN   DCFSC0,,,            READ DISK - SCTR CNT = 000
                                                                04908 36 03588 00702
05530         BNE   *+44,,,              E/Z ON = I-CYCLE ENTRY
                                                                04920 47 04964 01200
05540         AM    LPCT,01,10,,         LOOP CNTR              04932 11 00449 000-1
05550         BNV   LP1                                         04944 47 04896 01400
05560         B7    RT03B                                       04956 49 05248 00000
05570*              OPERATION HUNG-UP
05580         BTM   REFN,42,10,          GO TYPE REF   B        04964 17 03164 000M2
05590         H                                                 04976 48 00000 00000
05600*        READ DISK WITH MQ=8 , SCTR CNT = 000
05610 RT03A1  CM    *+11,0,10,           TURN ON E/Z            04988 14 04999 000-0
05620         RN    DCFSC0,708,,         READ DISK MQ=8,SC=0    05000 36 03588 00708
05630         BE    RT03A2                                      05012 46 05096 01200
05640         BTM   ERRN,130,,           GO TYPE ERROR          05024 17 03220 -0130
05650         BTM   REFN,69,10,          GO TYPE REF   Z        05036 17 03164 00009
05660         H                                                 05048 48 00000 00000
05670         RN    DCFSC0,708,,         READ DISK  SC = 0,MQ = 8
                                                                05060 36 03588 00708
05680         BNC2  *-12                                        05072 47 05060 00200
05690         B     RSTRT                                       05084 49 00402 00000
05700*        READ DISK WITH,SCTR CNT = 000
05710 RT03A2  CM    *+11,0,10,           TURN ON E/Z IND        05096 14 05107 000-0
05720         RDN   DCFSC0,,,            READ DISK,SCTR CNT = 000
                                                                05108 36 03588 00702
05730         BNE   R3B,,,               E/Z ON = I CYCLE       05120 47 05176 01200
05740         BTM   ERRN,131,,           GO TYPE ERROR          05132 17 03220 -0131
05750 R3A     BTM   REFN,69,10,          GO TYPE REF   Z        05144 17 03164 00009
05760         H                                                 05156 48 00000 00000
05770         B7    R3B+36                                      05168 49 05212 00000
05780 R3B     BTM   ERRN,132,,           GO TYPE ERROR          05176 17 03220 -0132
```

```
05790          BTM  REFM,69,10                                  05188 17 03164 00009
05800          H                                                05200 48 00000 00000
05810          RDN  DCFSC0                                      05212 36 03588 00702
05820          BNC2 *-12                                        05224 47 05212 00200
05830          B    RSTRT                                       05236 49 00402 00000
05840*
05850*                    SEEK I-CYCLE ENTRY       CYLINDER 03
05860*
05870 RT03B    TFM  RSTRT+6,*,,          LOAD RESTART           05248 16 00408 -5248
05880 R3B1     CM   *+11,0,10,           TURN ON E/Z IND        05260 14 05271 000-0
05890          SK   CYLZ,,,,             SEEK CYL 00            05272 34 03546 00701
05900          BE   RT03C,,,             E/Z ON = I-CY          05284 46 05344 01200
05910*           SEEK OP HUNG-UP
05920          BTM  ERRN,133,,           GO TYPE ERROR          05296 17 03220 -0133
05930          SK   CYLZ                                        05308 34 03546 00701
05940          BNC2 *-12                                        05320 47 05308 00200
05950          B    RSTRT                                       05332 49 00402 00000
05960*
05970*           CHECK FOR POSITIVE STOP ON SEEK
05980*
05990 RT03C    CM   *+11,0,10,,          TURN ON E/Z            05344 14 05355 000-0
06000          RDN  DCFSC0,,,            READ DISK HANG-UP = POSITIVE STOP
                                                                05356 36 03588 00702
06010          BE   RT03D,,,                  STOP OR BUSY LATCH ON
                                                                05368 46 05524 01200
06020*           ASK IF POSITIVE STOP
06030          RCTY                                             05380 34 00000 C0102
06040          WATY ASKCS,,,             ASK USER IF POSITIVE STOP
                                                                05392 39 06119 00100
06050          BTM  YESNO,CSSW,,         GET ANSWER             05404 17 02996 -6256
06060          BNR  R3C2,CSSW,,          RM = YES  POS STP      05416 45 05476 06256
06070*           HEADS AT POSITIVE STOP
06080          BTM  ERRN,134,,           GO TYPE ERROR NO.      05428 17 03220 -0134
06090          SK   CYLZ                                        05440 34 03546 00701
06100          BNC2 *-12                                        05452 47 05440 00200
06110          B    RSTRT                                       05464 49 00402 00000
06120 R3C2     BTM  ERRN,135,,           GO TYPE ERROR          05476 17 03220 -0135
06130          RDN  DCFSC0,,,            READ DISK HANG-UP = POSITIVE STOP
                                                                05488 36 03588 00702
06140          BNC2 *-12                                        05500 47 05488 00200
06150          B    RSTRT                                       05512 49 00402 00000
06160*
06170*        READ DISK WITH ADDRESS CK EXIT
06180*
06190 RT03D    TFM  RSTRT+6,*,,          LOAD RESTART ADRS      05524 16 00408 -5524
06200*                MUC TRIGGER    CNTR 1-2
06210          SK   CYL01,,,             SEEK CYL 01            05536 34 06984 00701
06220*           CHECK FOR POSITIVE-STOP
06230          CM   *+11,0,10                                   05548 14 05559 000-0
06240          RDN  DCFSC0,,,            READ DISK SC = 000     05560 36 03588 00702
06250          BE   *+60                                        05572 46 05632 01200
```

```
06260          BTM  ERRN,140,9                                  05584 17 03220 00J40
06270          SK   CYL01                                       05596 34 06984 00701
06280          BNC2 *-12                                        05608 47 05596 00200
06290          B    RSTRT                                       05620 49 00402 00000
06300*               MUC  TRIGGER   CNTR  2-4
06310          SK   CYL02,,,          SEEK CYL  02              05632 34 06998 00701
06320*       CHECK FOR POSITIVE STOP
06330          CM   *+11,0,10                                   05644 14 05655 000-0
06340          RDN  DCFSC0,,,         READ DISK SC = 000        05656 36 03588 00702
06350          BE   *+60                                        05668 46 05728 01200
06360          BTM  ERRN,141,,        TYPE ERROR NO.            05680 17 03220 -0141
06370          SK   CYL02,,,          S  K 3YL  02              05692 34 06998 00701
06380          BNC2 *-12                                        05704 47 05692 00200
06390          B    RSTRT                                       05716 49 00402 00000
06400          SK   CYL3,,,           SEEK CYL 03               05728 34 03560 00701
06410          TFM  LPCT,20,1011                                05740 16 00449 000K-
06420 R3D1     CM   *+11,0,10,        TURN ON E/Z               05752 14 05763 000-0
06430          RDN  ADRSCK,,,         RD DISK FOR ADRS CK       05764 36 03574 00702
06440          BNE  *+44,,,           E/Z ON = I-CYCLE          05776 47 05820 01200
06450          AM   LPCT,01,10                                  05788 11 00449 000-1
06460          BNE  R3D1                                        05800 47 05752 01200
06470          B7   RT03E                                       05812 49 05936 00000
06480          RCTY                                             05820 34 00000 00102
06490          WATY HDLD00,,,         ASK IF HEADS AT CYL 00
                                                                05832 39 06195 00100
06500          BTM  YESNO,PSW                                   05844 17 02996 -3167
06510          BNR  *+60,PSW                                    05856 45 05916 03167
06520          BTM  ERRN,136,,,       TYPE ERROR NO             05868 17 03220 -0136
06530          RDN  ADRSCK,,,         HANG-UP                   05880 36 03574 00702
06540          BNC2 *-12                                        05892 47 05880 00200
06550          B    RSTRT                                       05904 49 00402 00000
06560          BTM  ERRN,137,,        GO TYPE ERROR             05916 17 03220 -0137
06570          B7   *-48                                        05928 49 05880 00000
06580*
06590*       READ TRACK SIMILAR TO ADDRESS CK EXIT
06600*
06610 RT03E    TFM  RSTRT+6,*,,       LOAD RESTART ADRS         05936 16 00408 -5936
06620 R3D4     CM   *+11,0,10,        TURN ON E/Z               05948 14 05959 000-0
06630          RTN  DCFTK,,,          READ TRACK                05960 36 06290 00706
06640          BNE  R3D2                                        05972 47 06004 01200
06650          BC4  RT03+24                                     05984 46 04884 00400
06660          B7   CHKMUC                                      05996 49 06304 00000
06670 R3D2     BTM  ERRN,138,,        GO TYPE ERROR   RD TK NRF TROUBLE
                                                                06004 17 03220 -0138
06680          RTN  DCFTK,,,          READ TRACK                06016 36 06290 00706
06690          BNC2 *-12                                        06028 47 06016 00200
06700          B    RSTRT                                       06040 49 00402 00000
06710*
06720*         DATA, CONSTANTS, AND TYPEOUTS ---
06730*
06740 RDAREA   DS   ,15000                                       15000 00000
```

```
06750 WRAREA DS    ,RDAREA+2200                                    06204 00000
06760 RDNT1  DAC   14,-RDN (SC=0)  '                               06053 00028
06770 RDNT2  DAC   19,-RDN (MQ=8,SC=0)  '                          06081 00038
06780 ASKCS  DAC   38,ARE HEADS AT POSITIVE STOP,TYPE Y-N  '       06119 00076
06790 HDLD00 DAC   31,ARE HEADS AT CYL 00,TYPE Y-N  '              06195 00062
06800 CSSW   DS    1                                               06256 00001
06810 ZZ3    DAC   16,-RD I-CYC ENTRY'                             06259 00032
06820 DCFTK  DDA   ,1,00180,20,RDAREA                              06290 00006 1 0180
                                                                   06296 00003 -20
                                                                   06299 00005 J5000
06830*
06840*
06850*
06860*          CHECK MUC TRIGGERS WILL FLIP
06870*               DO A SEEK TO SET MUC
06880*               THEN CHECK FOR POSITIVE-STOP
06890*
06900*                 MUC  TRIGGER   CNTR  4-8
06910 CHKMUC TFM   RSTRT+6,*,,          LOAD RESTART ADRS      06304 16 00408 -6304
06920        BTM   TYPE,ZZ4 ,,          TYPE  FLIP MUC TRGRS   06316 17 03096 -7097
06930        SK    CYL04,,,             SEEK CYL  04           06328 34 07012 00701
06940*         CHECK FOR POSITIVE STOP
06950        CM    *+11,0,10                                   06340 14 06351 000-0
06960        RDN   DCFSC0,,,            READ DISK SC = 000     06352 36 03588 00702
06970        BE    *+60                                        06364 46 06424 01200
06980        BTM   ERRN,142,,,          TYPE ERROR NO.         06376 17 03220 -0142
06990        SK    CYL04,,,             SEEK CYL  04           06388 34 07012 00701
07000        BNC2  *-12                                        06400 47 06388 00200
07010        B     RSTRT                                       06412 49 00402 00000
07020*                 MUC  TRIGGER   CNTR  8-10
07030        TFM   RSTRT+6,*                                   06424 16 00408 -6424
07040        SK    CYL05,,,             SEEK CYL  05           06436 34 07026 00701
07050*               CHECK FOR POSITIVE STOP
07060        CM    *+11,0,10                                   06448 14 06459 000-0
07070        RDN   DCFSC0,,,            READ DISK SC = 000     06460 36 03588 00702
07080        BE    *+60                                        06472 46 06532 01200
07090        BTM   ERRN,143,9,          TYPE ERROR NO.         06484 17 03220 00J43
07100        SK    CYL05,,,             SEEK CYL  05           06496 34 07026 00701
07110        BNC2  *-12                                        06508 47 06496 00200
07120        B     RSTRT                                       06520 49 00402 00000
07130*                 MUC  TRIGGER   CNTR  16-20
07140        TFM   RSTRT+6,*                                   06532 16 00408 -6532
07150        SK    CYL10,,,             SEEK CYL  10           06544 34 07040 00701
07160*               CHECK FOR POSITIVE STOP
07170        CM    *+11,0,10                                   06556 14 06567 000-0
07180        RDN   DCFSC0,,,            READ DISK SC = 000     06568 36 03588 00702
07190        BE    *+60                                        06580 46 06640 01200
07200        BTM   ERRN,144,9,          TYPE ERROR NO.         06592 17 03220 00J44
07210        SK    CYL10,,,             SEEK CYL  10           06604 34 07040 00701
07220        BNC2  *-12                                        06616 47 06604 00200
07230        B     RSTRT                                       06628 49 00402 00000
```

```
07240*                MUC  TRIGGER   CNTR  32-40
07250          TFM    RSTRT+6,*                                  06640 16 00408 -6640
07260          SK     CYL20,,,              SEEK CYL  20         06652 34 07054 00701
07270*                  CHECK FOR POSITIVE - STOP
07280          CM     *+11,0,10                                  06664 14 06675 000-0
07290          RDN    DCFSC0,,,             READ DISK SC = 000   06676 36 03588 00702
07300          BE     *+60                                       06688 46 06748 01200
07310          BTM    ERRN,145,9,           TYPE ERROR NO.       06700 17 03220 00J45
07320          SK     CYL20,,,              SEEK CYL  20         06712 34 07054 00701
07330          BNC2   *-12                                       06724 47 06712 00200
07340          B      RSTRT                                      06736 49 00402 00000
07350*                  MUC  TRIGGER   CNTR  64-80
07360          TFM    RSTRT+6,*                                  06748 16 00408 -6748
07370          SK     CYL40,,,              SEEK CYL  40         06760 34 07068 00701
07380*                  CHECK FOR POSITIVE - STOP
07390          CM     *+11,0,10                                  06772 14 06783 000-0
07400          RDN    DCFSC0,,,             READ DISK SC = 000   06784 36 03588 00702
07410          BE     *+60                                       06796 46 06856 01200
07420          BTM    ERRN,146,9,           TYPE ERROR NO.       06808 17 03220 00J46
07430          SK     CYL40,,,              SEEK CYL  40         06820 34 07068 00701
07440          BNC2   *-12                                       06832 47 06820 00200
07450          B      RSTRT                                      06844 49 00402 00000
07460*                       MUC TRIGGER          CTR 128 - 100
07470          TFM    RSTRT+6,*                                  06856 16 00408 -6856
07480          SK     CYL50,,,              SEEK CYL  50         06868 34 07082 00701
07490*                  CHECK FOR POSITIVE - STOP
07500          CM     *+11,0,10                                  06880 14 06891 000-0
07510          RDN    DCFSC0,,,             READ DISK SC = 000   06892 36 03588 00702
07520          BE     *+60                                       06904 46 06964 01200
07530          BTM    ERRN,147,9,           TYPE ERROR NO.       06916 17 03220 00J47
07540          SK     CYL50,,,              SEEK CYL  50         06928 34 07082 00701
07550          BNC2   *-12                                       06940 47 06928 00200
07560          B      RSTRT                                      06952 49 00402 00000
07570          BC4    CHKMUC+24                                  06964 46 06328 00400
07580          B7     RT3,5                                      06976 49 07238 00000
07590*                  DATA
07600 CYL01    DDA    ,1,00200,1,RDAREA                          06984 00006 1-0200
                                                                  069 0 00003 -01
                                                                  06993 00005 J5000
07610 CYL02    DDA    ,1,00400,1,RDAREA                          06998 00006 1-0400
                                                                  07004 00003 -01
                                                                  07007 00005 J5000
07620 CYL04    DDA    ,1,00800,1,RDAREA                          07012 00006 1-0800
                                                                  07018 00003 -01
                                                                  07021 00005 J5000
07630 CYL05    DDA    ,1,01000,1,RDAREA                          07026 00006 1-1000
                                                                  07032 00003 -01
                                                                  07035 00005 J5000
07640 CYL10    DDA    ,1,02000,1,RDAREA                          07040 00006 1-2000
                                                                  07046 00003 -01
                                                                  07049 00005 J5000
```

```
07650 CYL20   DDA   ,1,04000,1,RDAREA                                  07054 00006 1-4000
                                                                        07060 00003 -01
                                                                        07063 00005 J5000
07660 CYL40   DDA   ,1,08000,1,RDAREA                                  07068 00006 1-8000
                                                                        07074 00003 -01
                                                                        07077 00005 J5000
07670 CYL50   DDA   ,1,10000,1,RDAREA                                  07082 00006 1J0000
                                                                        07088 00003 -01
                                                                        07091 00005 J5000
07680 ZZ4     DAC   15,-FLIP MUC TGRS'                                  07097 00030
07690 ZZ15    DAC   21,-NORM FILE IND RESET'                            07127 00042
07700 ASKSL   DAC   35,IS SELECT LOCK LIGHT ON,TYPE Y-N  '              07169 00070
07710*
07720*
07730*          THIS ROUTINE CHECKS THE FILE
07740*          INDICATOR RESET LINES.
07750*                      INSTRUCTION
07760*                          RTN (NORMAL OPERATION)
07770*                          RDN (SECTOR COUNT = 0)
07780*
07790*
07800 RT3.5   TFM   RSTRT+6,*,,          LOAD RESTART              07238 16 00408 -7238
07810         BTM   TYPE,ZZ15,,          TYPE  NORMAL FILE IND RESET
                                                                        07250 17 03096 -7127
07820 R11A    BTM   INDRST,*+12,,        RESET INDICATORS          07262 17 02904 -7274
07830         RTN   CYL3,,,              NORMAL TRACK OP           07274 36 03560 00706
07840         BC1   *-12                                           07286 46 07274 00100
07850         BNI   R11A1,3600,,         ADRS CHK                  07298 47 07390 03600
07860         RCTY                                                 07310 34 00000 00102
07870         WATY  ASKSL,,,             ASK IF SELECT LOCK        07322 39 07169 00100
07880         BTM   YESNO,PSW,,          GET ANSWER                07334 17 02996 -3167
07890         BNR   *+20,PSW,,           RM = YES                  07346 45 07366 03167
07900         B7    SELOK                                          07358 49 10432 00000
07910         BTM   ERRN,150,,           TYPE ERROR NO.            07366 17 03220 -0150
07920         BNC2  R11A                                           07378 47 07262 00200
07930 R11A1   BNI   *+36,3800,,          OVFLO CHK                 07390 47 07426 03800
07940         BTM   ERRN,151,,           GO TYPE ERROR             07402 17 03220 -0151
07950         BNC2  R11A                                           07414 47 07262 00200
07960         BNI   *+36,3700,,          WLR-RBC                   07426 47 07462 03700
07970         BTM   ERRN,152,,           GO TYPE ERROR             07438 17 03220 -0152
07980         BNC2  R11A                                           07450 47 07262 00200
07990         BNF   *+24,RSTRT+3                                   07462 44 07486 00405
08000         B     RSTRT                                          07474 49 00402 00000
08010*
08020*
08030*
08040 R11B    BTM   INDRST,*+12,,        RESET INDICATORS          07486 17 02904 -7498
08050         RDN   DCFSC0,,,            RDN  SCTR CNT = 000       07498 36 03588 00702
08060         BC1   *-12                                           07510 46 07498 00100
08070         BNI   *+36,3600,,          ADRS CK                   07522 47 07558 03600
08080         BTM   ERRN,153,,           GO TYPE ERROR             07534 17 03220 -0153
```

```
08090          BNC2 R11B                                    07546 47 07486 00200
08100          BNI  *+36,3800,,          OVFLO CK           07558 47 07594 03800
08110          BTM  ERRN,154,,           GO TYPE ERROR      07570 17 03220 -0154
08120          BNC2 R11B                                    07582 47 07486 00200
08130          BNI  *+36,3700,,          WLR-RBC            07594 47 07630 03700
08140          BTM  ERRN,155,,           GO TYPE ERROR      07606 17 03220 -0155
08150          BNC2 R11B                                    07618 47 07486 00200
08160          BC4  R11A                                    07630 46 07262 00400
08170          BNF  *+24,RSTRT+3                            07642 44 07666 00405
08180          B    RSTRT                                   07654 49 00402 00000
08190*
08200*
08210*
08220*                        HEAD MAP ROUTINE
08230*
08240*
08250*           THIS ROUTINE GENERATES A HEAD MAP.
08260*           THIS MAP IS 10 DIGITS LONG AND IS
08270*           A SERIES OF DIGITS 0-9,AT SIGNS,AND RM.
08280*
08290*          -FIRST A SEEK IS PERFORMED TO MOVE THE
08300*                ACCESS MECHANISM TO SOME CYLINDER (03)
08310*          -SECOND A READ TRACK IS USED TO TRANSFER
08320*                DATA FROM HD 0-9 TO THE 1620.
08330*          -THIRD GENERATE MAP -  HD NO.ORDER 0123456789
08340*                AT SIGN        =  NO DATA TRANSFER
08350*                RECORD MARK    =  PARITY OR RD CK ON TRANSFER
08360*                DIG 0 - 9      =  SCTR ADRS DECODED TO HD NO
08370*
08380*          -FOURTH
08390*                      NORMAL MAP      0123456789
08400*
08410*          -ERROR TYPEOUT
08420*
08430*                      HEAD MAP  XXXXXXXXXX
08440*                WHERE -
08450*                      X-X  IS MAP CHARACTERS
08460*
08470 RT04     TFM  RSTRT+6,*,,          LOAD RESTART ADRS  07666 16 00408 -7666
08480          BTM  TYPE,ZZ5 ,,          TYPE  READ HEAD MAP 07678 17 03096 J0097
08490          TFM  CYL3+5,780,,                            07690 16 03565 -0780
08500          SK   CYL3,,,              SEEK TO CYLINDER 03 07702 34 03560 00701
08510 R4BB     TFM  CYL3+5,780,,                            07714 16 03565 -0780
08520          TDM  HMER,0                                  07726 15 07735 00000
08530 HMER     DC   1,0,*-2                                 07735 00001
08540          TFM  AERC,0,9                                07738 16 10062 00-00
08550          TFM  XERC,0,9,,           INIT               07750 16 10067 00-00
08560          TFM  PERC,0,9,,               IAL            07762 16 10070 00-00
08570          TFM  R4B3+6,19999,,               IZE        07774 16 08304 J9999
08580 R4B5     BTM  SRESET,,,            RESET READ AREA    07786 17 01140 -0000
08590          BTM  INDRST                                  07798 17 02904 -0000
```

```
08600          RTN  CYL3,,,              READ TRACK HD 9 TO 0  07810 36 03560 00706
08610          BI   R4B1+48,600                               07822 46 08110 00600
08620          NOP                                            07834 41 00000 00000
08630*       CHECK FOR RECORD MARKS IN SECTOR ADDRESS
08640          BNR  *+20,RDAREA                               07846 45 07866 15000
08650          B7   R4B1+48                                   07858 49 08110 00000
08660          BNR  *+20,RDAREA+1                             07866 45 07886 15001
08670          B7   R4B1+48                                   07878 49 08110 00000
08680          BNR  *+20,RDAREA+2,,     CHECK FOR 8,2 BITS    07886 45 07906 15002
08690          B7   R4B1+48                                   07898 49 08110 00000
08700          BNR  *+20,RDAREA+3                             07906 45 07926 15003
08710          B7   R4B1+48                                   07918 49 08110 00000
08720          BNR  *+20,RDAREA+4                             07926 45 07946 15004
08730          B7   R4B1+48                                   07938 49 08110 00000
08740*           CHECK FOR DATA TRANSFER
08750          BD   R4B1,RDAREA,,       CHK  FIRST CHAR       07946 43 08062 15000
08760          BD   R4B1,RDAREA+1,,     CHK SECOND CHAR       07958 43 08062 15001
08770          BD   R4B1,RDAREA+2,,     CHK  THIRD CHAR,EVEN  07970 43 08062 15002
08780          BD   R4B1,RDAREA+3,,     CHK  FOURTH CHAR,ODD  07982 43 08062 15003
08790          BD   R4B1,RDAREA+5,,     CHK  SIXTH CHAR,ODD   07994 43 08062 15005
08800          BD   R4B1,RDAREA+6,,     CHK  SEVENTH CHAR,EVEN
                                                              08006 43 08062 15006
08810*           SET MAP CHAR TO AN  AT SIGN
08820          AM   XERC,01,10,         UPDATE XFER ER CNTR   08018 11 10067 000-1
08830          TD   HMER,RM                                   08030 25 07735 03545
08840          TDM  BOX,,,              BLANK = NO XFER       08042 15 00805 00000
08850          DNB  1,*                                       08053 00001
08860          B7   R4B2                                      08054 49 08146 00000
08870*           CHECK FOR PARITY,FIRST 5 CHAR
08880 R4B1     SF   RDAREA                                    08062 32 15000 00000
08890          TF   RDAREA+4,RDAREA+4,, RD-WR MEM DATA        08074 26 15004 15004
08900          BI   *+24,1600                                 08086 46 08110 01600
08910          BNI  R4B4,1700                                 08098 47 08166 01700
08920*           SET MAP CHAR TO A RECORD MARK
08930          AM   PERC,01,10,         UPDATE PARITY ER CT   08110 11 10070 000-1
08940          TD   BOX,RM,,            RM = PARITY ER        08122 25 00805 03545
08950          TD   HMER,RM                                   08134 25 07735 03545
08960 R4B2     TF   BADSA,CYL3+5,,      STORE BAD HD ADRS     08146 26 10051 03565
08970          B7   *+32                                      08158 49 08190 00000
08980*           COMPUTE HEAD NO,FROM SECTOR ADRS
08990 R4B4     MM   RDAREA+4,05,10,     COMPUTE               08166 13 15004 000-5
09000          TD   BOX,97,,              TRACK NO,           08178 25 00805 00097
09010          SF   95,,,                                     08190 32 00095 00000
09020          CM   96,3,10,,                                 08202 14 00096 000-3
09030          BE   *+48                                      08214 46 08262 01200
09040          SF   BOX                                       08226 32 00805 00000
09050          AM   AERC,1,10                                 08238 11 10062 000-1
09060          TD   HMER,RM                                   08250 25 07735 03545
09070          B    R4B3                                      08262 49 08298 00000
09080          BD   *-48,99,,,                                08274 43 08226 00099
09090          BD   *-60,98,,,                                08286 43 08226 00098
```

```
09100 R4B3   TD   19999,BOX,,                                  08298 25 19999 00805
09110        SM   *-6,01,,          DECR FOR                   08310 12 08304 -0001
09120        SM   CYL3+5,20,10,       NEXT HD                  08322 12 03565 000K0
09130        CM   CYL3+5,580,9,     CHK ALL HEADS READ         08334 14 03565 00N80
09140        BNE  R4B5                                         08346 47 07786 01200
09150        TFM  CHKSL+5,780,,                                08358 16 03565 -0780
09160*
09170*         DECODE ERROR MAP AND ERROR COUNTERS
09180*
09190*         CHECK FOR XFER FAILURE ON ALL HEADS.
09200        SK   CHKSL,,,                                     08370 34 03560 00701
09210        BI   SELOK,3600,,                                 08382 46 10432 03600
09220        BNR  R4D0,HMER                                    08394 45 09010 07735
09230        BTM  ASK3,*+12,,       GO ASK IF AT CYL 3         08406 17 09886 -8418
09240        CM   XERC,10,10,       CHK ER CNT = 10            08418 14 10067 000J0
09250        BE   R4X1                                         08430 46 09498 01200
09260*         CHECK FOR PARITY CHK WITH ALL HEADS.
09270        CM   PERC,10,10,       CHK ER CNT = 10            08442 14 10070 000J0
09280        BE   R4X2                                         08454 46 09650 01200
09290*         CHECK FOR ANY ERRORS
09300        A    PERC,XERC,,       COMPUTE TOTAL ERRORS       08466 21 10070 10067
09310        BE   R4X5,,,                                      08478 46 09414 01200
09320*                TOTAL CNT = 1
09330        CM   PERC,01,10                                   08490 14 10070 000-1
09340        BE   R4D2                                         08502 46 08738 01200
09350*                TOTAL CNT = 10
09360        CM   PERC,10,10                                   08514 14 10070 000J0
09370        BNE  R4D1                                         08526 47 08634 01200
09380*         10 XFER AND PARITY ERRORS
09390*         CHECK FOR 1 XFER FAILURE
09400        CM   XERC,01,10                                   08538 14 10067 000-1
09410        BE   R4X2                                         08550 46 09650 01200
09420        BTM  HMTOE,160,,       TYPE ERROR NO              08562 17 09746 -0160
09430        BI   *+36,00100,,                                 08574 46 08610 00100
09440        BI   SCAN1,00200,,                                08586 46 00776 00200
09450        B    R4BB,,,                                      08598 49 07714 00000
09460        36   CYL3,00706,,                                 08610 36 03560 00706
09470        B    *-48,,,                                      08622 49 08574 00000
09480*         SOME XFER,PARITY,AND SOME GOOD DATA
09490 R4D1   C    XERC,PERC,,       CHECK FOR NO XFER ERRORS
                                                               08634 24 10067 10070
09500        BE   R4D11                                        08646 46 08702 01200
09510        BD   *+20,XERC                                    08658 43 08678 10067
09520        B7   R4X2                                         08670 49 09650 00000
09530        BTM  HMTOE,161,,       TYPE ERROR                 08678 17 09746 -0161
09540        B    R4B7,,,                                      08690 49 09102 00000
09550 R4D11  NOP                                               08702 41 00000 00000
09560        BTM  HMTOE,162,,       TYPE ERROR NO.             08714 17 09746 -0162
09570        B    R4B7,,,                                      08726 49 09102 00000
09580*                1 ERROR EITHER PARITY OR XFER
09590 R4D2   CM   XERC,01,10                                   08738 14 10067 000-1
```

```
09600          BE    R4X3                                        08750 46 09450 01200
09610          BTM   HMTOE,163,,          TYPE ERROR NO.        08762 17 09746 -0163
09620          RTN   BRDX4,,,             READ BAD DATA         08774 36 10046 00706
09630**          FIND LOCATION OF BAD PARITY
09640          BTM   INDRST,,,            RESET INDICATORS      08786 17 02904 -0000
09650          TFM   *+35,RDAREA                                08798 16 08833 J5000
09660          TF    *+18,*+23                                  08810 26 08828 08833
09670 MOV      TD    99999,99999,,        MOVE DIGIT            08822 25 99999 99999
09680          AM    *-1,01                                     08834 11 08833 -0001
09690          BI    MOVPAR,1600,,        CHECK FOR             08846 46 08954 01600
09700          BI    MOVPAR,1700,,          PARITY              08858 46 08954 01700
09710          CM    MOV+11,RDAREA+2100,,CHK DONE               08870 14 08833 J7100
09720          BNE   MOV-12                                     08882 47 08810 01200
09730 LBRD     NOP                                              08894 41 00000 00000
09740          RTN   BRDX4,,,             READ WITH BAD HEAD    08906 36 10046 00706
09750          BC1   *-12                                       08918 46 08906 00100
09760          BNC2  R4B7                                       08930 47 09102 00200
09770          B     RSTRT                                      08942 49 00402 00000
09780*
09790 MOVPAR   SM    MOV+11,RDAREA,,      COMPUTE DELTA         08954 12 08833 J5000
09800          TF    *+18,MOV+11                                08966 26 08984 08833
09810          SPTY                                             08978 34 00000 00101
09820          DC    01,',*-4                                   08985 00001
09830          WNTY  *-10,,,               TYPE PARITY LOCATION 08990 38 08980 00100
09840          B7    LBRD                                       09002 49 08894 00000
09850*           CHECK HEAD MAP VS NORMAL MAP
09860 R4D0     TDM   19989,0,11,          SET FLAG              09010 15 19989 0000-
09870          C     19999,NHDM,,         CHK NORMAL MAP        09022 24 19999 10431
09880          BNE   *+44                                       09034 47 09078 01200
09890          BC4   R4BB                                       09046 46 07714 00400
09900          BC3   RT02                                       09058 46 04186 00300
09910          B7    LOAD2                                      09070 49 00414 00000
09920*
09930*           OUTPUT - ERROR NUMBER AND HEAD MAP
09940*
09950          BTM   ASK3,*+12,,          GO ASK IF AT CYL 3    09078 17 09886 -9090
09960          BTM   HMTOE,164,,          TYPE ERROR NO.        09090 17 09746 -0164
09970 R4B7     RCTY                                             09102 34 00000 00102
09980          TD    19999,RM                                   09114 25 19999 03545
09990          WATY  RQHN                                       09126 39 10211 00100
10000          RCTY                                             09138 34 00000 00102
10010          WATY  RQAL                                       09150 39 10303 00100
10020          SPTY                                             09162 34 00000 00101
10030          RNTY  HDNM                                       09174 36 10064 00100
10040          BNR   R4X7,HDNM                                  09186 45 09294 10064
10050 R4X6     TFM   CYL3+5,780                                  09198 16 03565 -0780
10060          RTN   CYL3,,,                                    09210 36 03560 00706
10070          SM    CYL3+5,20,10                               09222 12 03565 000K0
10080          CM    CYL3+5,580,9                               09234 14 03565 00N80
10090          BNE   R4X6+12,,,                                 09246 47 09210 01200
10100          BC1   R4X6                                       09258 46 09198 00100
```

```
10110          BNC2 R4B7                                          09270 47 09102 00200
10120          B    RT04                                          09282 49 07666 00000
10130 R4X7     MM   HDNM,02,10                                    09294 13 10064 000-2
10140          TF   CYL3+4,99                                     09306 26 03564 00099
10150          RTN  CYL3                                          09318 36 03560 00706
10160          BC1  *-12                                          09330 46 09318 00100
10170          TD   RDAREA+40,RM                                  09342 25 15040 03545
10180          RCTY                                               09354 34 00000 00102
10190          WNTY RDAREA                                        09366 38 15000 00100
10200          BC4  R4X7                                          09378 46 09294 00400
10210          BNC2 R4B7                                          09390 47 09102 00200
10220          B    RT04                                          09402 49 07666 00000
10230*
10240 R4X5     NOP                                                09414 41 00000 00000
10250          BTM  HMTOE,168                                     09426 17 09746 -0168
10260          B    R4B7                                          09438 49 09102 00000
10270 R4X3     NOP                                                09450 41 00000 00000
10280          BTM  HMTOE,165,,          GO TYPE ERROR            09462 17 09746 -0165
10290          BNC2 R4B7                                          09474 47 09102 00200
10300          B    RSTRT                                         09486 49 00402 00000
10310*
10320*           SECONDARY TEST FOR NO DATA TRANSFER
10330*           FROM ANY OF THE 10 HEADS
10340*
10350*           ASK USER IF HEADS ARE LOADED
10360 R4X1     NOP                                                09498 41 00000 00000
10370          RCTY                                               09510 34 00000 00102
10380          WATY HDLD,,,              ASK IF HD LD             09522 39 10123 00100
10390          BTM  YESNO,PSW,,          GET ANSWER               09534 17 02996 -3167
10400          BNR  R4X11,PSW,,          RM = YES                 09546 45 09626 03167
10410          BTM  REFN,55,10,          GO TYPE REF   N          09558 17 03164 000N5
10420          WATY TYPHD                                         09570 39 10399 00100
10430          DNTY 19990,,,             DUMP HEAD MAP            09582 35 19990 00100
10440          TFM  19999,0,,            RESET DUMP AREA          09594 16 19999 -0000
10450          H                                                  09606 48 00000 00000
10460          B7   BITRNG                                        09618 49 02134 00000
10470 R4X11    BTM  ERRN,166,,           GO TYPE ERROR            09626 17 03220 -0166
10480          B    RSTRT                                         09638 49 00402 00000
10490*
10500*           SECONDARY TEST FOR PARITY CHECKS
10510*           OR READ CHECKS ON ALL HEADS
10520*
10530 R4X2     NOP                                                09650 41 00000 00000
10540          BTM  REFN,57,10,          GO TYPE REF   P          09662 17 03164 000N7
10550          WATY TYPHD                                         09674 39 10399 00100
10560          DNTY 19990,,,             DUMP HEAD MAP            09686 35 19990 00100
10570          TFM  19999,0,,            RESET DUMP AREA          09698 16 19999 -0000
10580          H                                                  09710 48 00000 00000
10590          BTM  RSTIND                                        09722 17 02904 -0000
10600          B7   SCAN1                                         09734 49 00776 00000
10610*
```

```
10620*          ERROR OUTPUT ROUTINE
10630*
10640           DS    5                                          09745 00005
10650 HMTOE     BC1   HMTOE1                                     09746 46 09878 00100
10660           RCTY                                             09758 34 00000 00102
10670           WNTY  RSTRT+2,,,          TYPE RT LOC            09770 38 00404 00100
10680           TD    ERR+14,HMTOE-3                             09782 25 03417 09743
10690           TD    ERR+16,HMTOE-2                             09794 25 03419 09744
10700           TD    ERR+18,HMTOE-1                             09806 25 03421 09745
10710           WATY  ERR,,,              TYPE ERROR NO.         09818 39 03403 00100
10720           WATY  TYPHD                                      09830 39 10399 00100
10730           DNTY  19990,,,            DUMP HEAD MAP          09842 35 19990 00100
10740           TFM   19999,0,,           RESET DUMP AREA        09854 16 19999 -0000
10750           H                                                09866 48 00000 00000
10760 HMTOE1    BB2                                              09878 42 00000 00000
10770*
10780*          ASK USER IF ACCESS IS POSITIONED AT CYL 03
10790*
10800           DS    5                                          09884 00005
10810 ASK3      RCTY                                             09886 34 00000 00102
10820           WATY  TSWC31,,,           CHK HDS AT CYL 3       09898 39 03441 00100
10830           BTM   YESNO,PSW,,         GET ANSWER             09910 17 02996 -3167
10840           BNR   *+32,PSW,,          RM  =  YES             09922 45 09954 03167
10850           TF    *+18,ASK3-1                                09934 26 09952 09885
10860           B7    99999,,,            RETURN                 09946 49 99999 00000
10870*
10880           BTM   ERRN,167,,          TYPE ERROR             09954 17 03220 -0167
10890           TFM   ASK3-1,R4BB                                09966 16 09885 -7714
10900           SK    CYL3,,,             SEEK CYL  03           09978 34 03560 00701
10910           BC1   *-12                                       09990 46 09978 00100
10920           BNC2  ASK3                                       10002 47 09886 00200
10930           BTM   REFN,52,10,         GO TYPE REF   K        10014 17 03164 C00N2
10940           H                                                10026 48 00000 0000C
10950           B7    R4BB                                       10038 49 07714 00000
10960*
10970*          DATA AND CONSTANTS FOR ROUTINE  4
10980*
10990 BRDX4     DDA   ,1,99999,20,RDAREA                         10046 00006 1R9999
                                                                 10052 00003 -20
                                                                 10055 00005 J5000
11000 BADSA     DS    ,BRDX4+5                                   10051 00000
11010 AERC      DC    03,0                                       10062 00003
11020 HDNM      DC    2,30                                       10064 00002
11030 XERC      DC    03,0                                       10067 00003
11040 PERC      DC    03,0                                       10070 00003
11050 TDRD      DAC   12, DATA READ '                            10073 00024
11060 ZZ5       DAC   13,-RD HEAD MAP'                           10097 00026
11070 HDLD      DAC   44,ARE HEADS LOADED TO DISK SURFACE,TYPE Y-N  '
                                                                 10123 00088
11080 RQHN      DAC   46, TO READ (LOOP) SINGLE HEAD ENTER HEAD NUMBER'
                                                                 10211 00092
```

```
11090 RQAL   DAC  46, TO READ (LOOP) ALL HEADS ENTER A RECORD MARK'          10303 00092
11100 HDCNT  DC   03,0                                                      10396 00003
11110 TYPHD  DAC  12,-HEAD MAP  '                                           10399 00024
11120 NHDM   DC   10,0123456789                                             10431 00010
11130*
11140*             1311 DISK - SELECT LOCK
11150*
11160*          THIS PROGRAM DETERMINES THE
11170*          CAUSE OF SELECT LOCK ON THE
11180*          IBM 1311 DISK FILES
11190*
11200*          THE POSSIBLE CAUSES ARE AS FOLLOWS -
11210*               1 - HEAD SELECT SAFETY
11220*               2 - WRITE/ERASE SAFETY
11230*               3 - READ/WRITE GATES
11240*               4 - AC/DC SAFETY
11250*               5 - MODULE SELECT SAFETY
11260*
11270*          CONTROL ROUTINE
11280*
11290 SELOK  TFM  RSTRT+6,*,,          LOAD RESTART          10432 16 00408 J0432
11300        BTM  REFN,59,10,          GO TYPE REF   R       10444 17 03164 000N9
11310        H                                               10456 48 00000 00000
11320*
11330*          THIS SUBPROGRAM CHECKS AC-DC,WR-ER,
11340*          AND RD-WR SAFETY SELECT LOCK
11350*
11360        TFM  RSTRT+6,*                                  10468 16 00408 J0468
11370        BTM  INDRST,,,            RESET INDICATORS      10480 17 02904 -0000
11380        RDN  RESET,,,                                   10492 36 03602 00702
11390*          CHECK FOR SELECT LOCK
11400        SK   CHKSL,,,             SEEK MSTR MOD         10504 34 03560 00701
11410        BNI  SLB1,3600,,          ADRS CHK = SEL LOK    10516 47 10796 03600
11420*          ERROR CONDITION DETECT-
11430*          AC-DC,WR-ER,RD-WR
11440        BTM  REFN,62,10,          GO TYPE REF   S       10528 17 03164 00002
11450        H                                               10540 48 00000 00000
11460        RDN  RESET,,,                                   10552 36 03602 00702
11470*          CHECK FOR SELECT LOCK
11480        SK   CHKSL                                      10564 34 03560 00701
11490        BI   *+32,3600,,          ADRS CK = SEL LOK     10576 46 10608 03600
11500        BTM  ERRN,170,,           WR-ER CAUSED SEL LOK  10588 17 03220 -0170
11510        B7   SLE1,,,,                                   10600 49 10760 00000
11520*          STILL GOT SELECT LOCK WITH WR-ER
11530*          SAFETY PULLED,SOMETHING ELSE CAUSED IT
11540        BTM  REFN,63,10,          GO TYPE REF   T       10608 17 03164 00003
11550        H                                               10620 48 00000 00000
11560        RDN  RESET,,,                                   10632 36 03602 00702
11570        SK   CHKSL,,,             CHK FOR SEL LOK       10644 34 03560 00701
11580        BI   *+32,3600,,          ADRS CHK = SEL LOK    10656 46 10688 03600
```

```
11590          BTM  ERRN,172,,          [illegible]  10688 17 [illegible] -0171
11600          B7   SLE1,,,,                                10680 48 [illegible] 00000
11610*           RD-WR DIDNT CAUSE SELECT LOCK
11620          BTM  REFN,64,10,         GO TYPE REF    U     10688 17 03164 00004
11630          H                                             10700 48 00000 00000
11640          RDN  RESET,,,                                 10712 36 03602 00702
11650          SK   CHKSL,,,            CHK FOR SEL LOK      10724 34 03560 00701
11660          BI   *+36,3600,,         ADRS CK = SEL LOK    10736 46 10772 03600
11670          BTM  ERRN,172,,          AC-DC CAUSED SEL LOK 10748 17 03220 -0172
11680 SLE1     NOP                                           10760 41 00000 00000
11690          NOP                                           10772 41 00000 00000
11700          B    SELOK*+36,,,     TRY AGAIN                10784 49 00036 00000
11710*
11720*
11730*           MODULE SELECTION SELECT LOCK
11740*
11750*
11760*           THIS ROUTINE CHECKS - MULTIPLE MODULE SAFETY
11770*
11780 SLB1     TFM  RSTRT+6,*                                10796 16 00408 J0796
11790          SK   RESET,,,            RESET SEL LOK        10808 34 03602 00701
11800          BTM  RSTIND,,,           RESET INDICATORS     10820 17 02904 -0000
11810          TD   SEEK,460                                 10832 25 12050 00460
11820          SK   SEEK                                     10844 34 12050 00701
11830          SK   CHKSL                                    10856 34 03560 00701
11840          BNI  SLHD,3600                                10868 47 11524 03600
11850 SLB2     TFM  RSTRT+6,*                                10880 16 00408 J0880
11860          SK   RESET                                    10892 34 03602 00701
11870          BTM  RSTIND                                   10904 17 02904 -0000
11880          RCTY                                          10916 34 00000 00102
11890          WATY TNMOD,,,            REQUEST NO. OF MOD.  10928 39 12065 00100
11900          RNTY NOMOD,,,            ACCEPT NO.           10940 36 03247 00100
11910          CM   NOMOD,1,10                               10952 14 03247 000-1
11920          BE   SLB3                                     10964 46 11012 01200
11930          RCTY                                          10976 34 00000 00102
11940          WATY TOAM                                     10988 39 11477 00100
11950          H                                             11000 48 00000 00000
11960 SLB3     TFM  MMAP,0,,            RESET MOD MAP        11012 16 11520 -0000
11970          TFM  MOD,0,10,           RESET MOD CNTR       11024 16 11523 000-0
11980          TFM  P2+6,MMAP-3                              11036 16 11126 J1517
11990 B21      MM   MOD,02,10,          COMPUTE              11048 13 11523 000-2
12000          AM   99,01,10,            DRIVE               11060 11 00099 000-1
12010          TD   SEEK,99,,             CODE               11072 25 12050 00099
12020*           SELECT MODULE
12030          SK   SEEK,,,             SEEK MODULE          11084 34 12050 00701
12040*           CHECK FOR SELECT LOCK
12050          SK   CHKSL,,,            CHECK                11096 34 03560 00701
12060          BNI   *+48,3600,,          SELECT LOCK        11108 47 11156 03600
12070 P2       TDM  99999,1,,           SET MAP TO 1         11120 15 99999 00001
12080          SK   RESET,,,            RESET                11132 34 03602 00701
12090          BTM  RSTIND,,,             IND                11144 17 02904 -0000
```

DT 0023
PN 2172366
EC 412531

```
12100          AM    P2+6,01,10,                                  11156 11 11126 000-1
12110          AM    MOD,01,10,                                   11168 11 11523 000-1
12120          C     MOD,NOMOD,,          CHK ALL MOD, SELECTED   11180 24 11523 03247
12130          BNE   B21                                          111 2 47 11048 01200
12140*           DECODE MODULE MAP,1 = SEL LOK
12150          CM    MMAP,0,,             0000 = MOD SEL OKAY     11204 14 11520 -0000
12160          BE    SW22                                         11216 46 11420 01200
12170*           SCAN FOR A ZERO
12180          TFM   MOD,0,10,            INITIALIZE              11228 16 11523 000-0
12190          TFM   Q2+11,MMAP-3                                 11240 16 11263 J1517
12200 Q2       BD    *+20,99999,,         IS MAP DIG = 1          11252 43 11272 99999
12210          B7    B22,,,               FOUND A ZERO            11264 49 11340 00000
12220          AM    MOD,01,10,           UPDATE                  11272 11 11523 000-1
12230          AM    Q2+11,01,10                                  11284 11 11263 000-1
12240          C     MOD,NOMOD,,          SCAN COMPLETED          11296 24 11523 03247
12250          BNE   Q2                                           11308 47 11252 01200
12260*           LOOKS LIKE 2 OR MORE MODULES ALWAYS SELECTED
12270          BTM   ERRN,173,711,,,                              11320 17 03220 -017L
12280          B7    B23                                          11332 49 11364 00000
12290*           SELECTED MODULE FOUND
12300 B22      TD    MODULE+14,MOD                                11340 25 12187 11523
12310          BTM   ETO,SELM,711,        GO TYPE ERROR           11352 17 12232 J219L
12320 B23      BC1   *+36                                         11364 46 11400 00100
12330          WNTY  MMAP-3,,,            TYPR MAP                11376 38 11517 00100
12340          H                                                  11388 48 00000 00000
12350          BNC2  SLB3                                         11400 47 11012 00200
12360          B7    SELOK                                        11412 49 10432 00000
12370 SW22     BC4   SELOK                                        11420 46 10432 00400
12380          BTM   REFN,69,10,          TYPE REF NO,    Z       11432 17 03164 00009
12390          H                                                  11444 48 00000 00000
12400          BC4   SELOK                                        11456 46 10432 00400
12410          B7    LOAD2                                        11468 49 00414 00000
12420*             CONSTANTS
12430 TOAM     DAC   20,TURN ON ALL MODULES'                      11477 00040
12440 MMAP     DC    05,0                                         11520 00005
12450          DC    01,'                                         11521 00001
12460 MOD      DC    02,0                                         11523 00002
12470*
12480*
12490*           HEAD SELECT SAFETY,SELECT LOCK
12500*
12510*
12520*           THIS ROUTINE CHECKS HEAD SELECTION SAFETY
12530*
12540 SLHD     TFM   RSTRT+6,*                                    11524 16 00408 J1524
12550          TD    SEEK,460,,,                                  11536 25 12050 00460
12560          TFM   B31+11,LOOP                                  11548 16 11631 J2133
12570 B37      TFM   P3+6,HMAP-9                                  11560 16 11734 J2038
12580          TF    HMAP,HRST                                    11572 26 12047 12026
12590          TFM   SEEK+5,SCTR,,        SET SECTOR ADRS         11584 16 12055 J0000
12600          SK    RESET,,,             RESET                   11596 34 03602 00701
```

```
12610          BTM  RSTIND,,,              INDICATORS          11608 17 02904 -0000
12620*           SELECT MODULE AND SET ACCESS ARMS
12630 B31      TF   OVFCT,99999,,          SET LOOP CNTRL      11620 26 12131 99999
12640          SK   SEEK                                       11632 34 12050 00701
12650          TF   *+23,P3+6                                  11644 26 11667 11734
12660          BD   P3+36,99999,,          CHK FOR ALREADY SEL LOK
                                                               11656 43 11764 99999
12670*           READ SEVERAL SECTORS WITH HD 0 TO 9
12680          RDN  READ,,,                READ DISK           11668 36 12050 00702
12690          AM   OVFCT,01,10                                11680 11 12131 000-1
12700          BNV  *-24                                       11692 47 11668 01400
12710*           CHECK FOR SELECT LOCK
12720          SK   CHKSL                                      11704 34 03560 00701
12730          BNI  *+48,3600,,            ADRS CK = SEL LOK   11716 47 11764 03600
12740 P3       TDM  99999,1                                    11728 15 99999 00001
12750          SK   RESET,,,               RESET               11740 34 03602 00701
12760          BTM  RSTIND,,,                INDICATORS        11752 17 02904 -0000
12770          AM   P3+6,01,10                                 11764 11 11734 000-1
12780          AM   READ+5,20,10,          UPDATE FOR NXT HD   11776 11 12055 000K0
12790          CM   READ+5,SCTR+200,,      CHK ALL HEADS DONE  11788 14 12055 J0200
12800          BNE  B31                                        11800 47 11620 01200
12810*
12820*           IF HEAD MAP = ALL ONES,CONSTANT SEL LOK
12830*
12840 SLRW     C    HMAP,ALL1                                  11812 24 12047 12036
12850          BNE  *+48                                       11824 47 11872 01200
12860          BTM  ERRN,171,,,                                11836 17 03220 -0171
12870          BNC2 SLHD                                       11848 47 11524 00200
12880          B    SELOK                                      11860 49 10432 00000
12890          CM   HMAP,0,10                                  11872 14 12047 000-0
12900          BE   SW32,,,                                    11884 46 11968 01200
12910*
12920*           MAP INDICATES THAT THIS MODULE
12930*           CONTAINES A HEAD THAT IS
12940*           ALWAYS SELECTED. 0 = IN MAP
12950*           INDICATES BAD SEL HEAD
12960*
12970 B35      BC1  *+36                                       11896 46 11932 00100
12980          BTM  ETO,HDSLM,711,         OUTPUT HD SEL MAP   11908 17 12232 J213R
12990          WNTY HMAP-9,,,              TYPE HD MAP         11920 38 12038 00100
13000          H                                               11932 48 00000 00000
13010          BNC2 B37                                        11944 47 11560 00200
13020          B    RSTRT                                      11956 49 00402 00000
13030 SW32     AM   B31+11,02,10                               11968 11 11631 000-2
13040          CM   B31+11,LOOP+6,,        CHK LOOP CNTRL DONE 11980 14 11631 J2139
13050          BNE  B37                                        11992 47 11560 01200
13060          B    SLB2                                       12004 49 10880 00000
13070*
13080*
13090*           DATA,CONSTANTS,AND TYPEOUTS FOR SELECT LOCK ROUTINE
13100*
```

```
13110*
13120 HRST    DC    11,0                                          12026 00011
13130 ALL1    DC    10,1111111111                                 12036 00010
13140 HMAP    DC    11,0                                          12047 00011
13150         DC    01,'                                          12048 00001
13160 CHKSL   DS    ,CYL3                                         03560 00000
13170 SEEK    DDA   ,9,SCTR,3,RDAREA                              12050 00006 9J0000
                                                                  12056 00003 -03
                                                                  12059 00005 J5000
13180 SCTR    DS    ,10000,,              SECTOR ADDRESS          10000 00000
13190 READ    DS    ,SEEK                                         12050 00000
13200 WRITE   DS    ,SEEK                                         12050 00000
13210 TNMOD   DAC   33,KEY IN TOTAL NUMBER OF MODULES  '          12065 00066
13220 OVFCT   DC    02,00                                         12131 00002
13230 LOOP    DC    02,99                                         12133 00002
13240         DC    02,90                                         12135 00002
13250         DC    02,50                                         12137 00002
13260 HDSLM   DAC   17,HD SEL LOK MAP  '                          12139 00034
13270 MODULE  DAC   10,MODULE 9 '                                 12173 00020
13280 SELM    DAC   17, ALWAYS SELECTED'                          12193 00034
13290*
13300*
13310*          ERROR TYPEOUT ROUTINE
13320*
13330         DS    5                                             12230 00005
13340 ETO     BC1   ETO1,,,               SW 1 ON BYPASS T/O      12232 46 12328 00100
13350         RCTY                                                12244 34 00000 00102
13360         WNTY  RSTRT+2,,,            TYPE RESTART ADRS       12256 38 00404 00100
13370         BNF   *+36,ETO-1,,          CHK FOR BYPASS          12268 44 12304 12231
13380         CF    ETO-1                                         12280 33 12231 00000
13390         WATY  MODULE,,,             TYPE MODULE             12292 39 12173 00100
13400         TF    *+18,ETO-1                                    12304 26 12322 12231
13410         WATY  99999,,,              TYPE ERROR MESSAGE      12316 39 99999 00100
13420 ETO1    BB2   ,,,                   RETURN                  12328 42 00000 00000
13430*
13440*          SPINDLE SPEED CHECK
13450*               JUMPER        INDEX TO RD CHK
13460*
13470 ADJUST  TFM   RSTRT+6,*,,            LOAD RESTART ADRS       12330 16 00408 J2330
13480         BTM   REFN,65,10,           GO TYPE REF   V         12342 17 03164 00005
13490         RCTY                                                12354 34 00000 00102
13500 M2C1    WATY  SSCRNG,,,             TYPE RANGE OF SPEED     12366 39 12865 00100
13510         H                                                   12378 48 00000 00000
13520*          INITIALIZE
13530 SSIN    TFM   RCNT,000,,            RESET                   12390 16 00810 -0000
13540         TFM   HDCNT,500,9,           COUNTERS               12402 16 10396 00N00
13550         BI    GATX,600,,            INDEX = RD CHK          12414 46 12498 00600
13560         TR    397,397                                       12426 31 00397 00397
13570         AM    HDCNT,01,10,          WAIT FOR FIRST PULSE    12438 11 10396 000-1
13580         BNV   *-36                                          12450 47 12414 01400
13590         BTM   ERADJ,NOGIX,,         NO INDEX                12462 17 12778 J2915
```

```
13600          BNC2 *-84                                    12474 47 12390 00200
13610          B    RSTRT                                   12486 49 00402 00000
13620*
13630 GATX     TFM  MCNT,32603,,      TIME CONST            12498 16 03363 L2603
13640          BI   *+12,600                                12510 46 12522 00600
13650          BNI  CHNG,600,,     INDEX TO READ CHK        12522 47 12566 00600
13660          AM   RCNT,1,10,                              12534 11 00810 000-1
13670          BI   *+12,600                                12546 46 12558 00600
13680          B7   *+20                                    12558 49 12578 00000
13690 CHNG     TR   383,383,,      DELAY CNT TIME           12566 31 00383 00383
13700 GATX1    SM   MCNT,01,10                              12578 12 03363 000-1
13710          BNE  GATX+24                                 12590 47 12522 01200
13720*
13730 ENUF     CM   RCNT,01515,,        CHECK MAX           12602 14 00810 -1515
13740          BNH  *+32                                    12614 47 12646 01100
13750          BTM  ERADJ,SSMIN,,       TYPE TOO FAST       12626 17 12778 J2951
13760          B7   CKLSW2                                  12638 49 12682 00000
13770 M2C2     CM   RCNT,01485,,        CHECK MIN           12646 14 00810 -1485
13780          BNL  *+44                                    12658 46 12702 01300
13790          BTM  ERADJ,SSMAX,,       TYPE TO SLOW        12670 17 12778 J2933
13800 CKLSW2   BNC2 SSIN                                    12682 47 12390 00200
13810          B    RSTRT                                   12694 49 00402 00000
13820          BTM  ERADJ,SSOK,,        TYPE OKAY           12706 17 12778 J2969
13830          BC4  SSIN                                    12718 46 12390 00400
13840 RMJ3     BTM  REFN,69,10,         GO TYPE REF    Z    12730 17 03164 00009
13850          H                                            12742 48 00000 00000
13860          BC4  RSTRT                                   12754 46 00402 00400
13870          B7   START                                   12766 49 03616 00000
13880*
13890*           ERROR ROUTINE FOR TYPING TIME COUNTER
13900*
13910          DS   5                                       12777 00005
13920 ERADJ    RCTY                                         12778 34 00000 00102
13930          WNTY RSTRT+2,,,          TYPE LOCATION       127 0 38 00404 00100
13940          TF   *+18,ERADJ-1                            12802 26 12820 12777
13950          WATY 99999,,,            TYPE ERROR          12814 39 99999 00100
13960          WNTY RCNT-3,,,                               12826 38 00807 00100
13970 ERADJ1   BC4  *+24                                    12838 46 12862 00400
13980          H                                            12850 48 00000 00000
13990          BB2                                          12862 42 00000 00000
14000*           TYPEOUTS FOR SPINDLE SPEED
14010 SSCRNG   DAC  25, RPM MAX 1515 - MIN 1485'            12865 00050
14020 NOGIX    DAC  09,-ER 180 '                            12915 00018
14030 SSMAX    DAC  09,-ER 181 '                            12933 00018
14040 SSMIN    DAC  09,-ER 182 '                            12951 00018
14050 SSOK     DAC  24, SPINDLE SPEED IS OKAY '             12969 00048
14060*
14070*           HEAD ALIGNMENT ROUTINE
14080*
14090*              1-SEEK TO CYLINDER 35
14100*              2-START WITH HEAD 0
```

```
14110*              3-READ DISK TRACK INSTRUCTION
14120*              4-ADVANCE TO NEXT HD
14130*                WHEN SW 2 TURNED ON/OFF
14140*              5-SW 4 ON LOOPS HD 9
14150*                BACK TO HEAD 0
14160*
14170 ALIGN   TFM   RSTRT+6,*,,          LOAD RESTART ADRS      13016 16 00408 J3016
14180         BTM   REFN,68,10,          GO TYPE REF   Y        13028 17 03164 00008
14190         H                                                 13040 48 00000 00000
14200         SK    CYL35,,,             SEEK TO CYLINDER 35    13052 34 13252 00701
14210         TFM   AL0+11,HASAD                                13064 16 13087 J3287
14220 AL0     TF    CYL35+5,99999                               13076 26 13257 99999
14230 AL1     MM    CYL35+5,05,10                               13088 13 13257 000-5
14240         TD    ALHD+12,97,,         INSERT HD NO.          13100 25 13279 00097
14250         RCTY                                              13112 34 00000 00102
14260         WATY  ALHD,,,              TYPE HEAD NO.          13124 39 13267 00100
14270*          READ DISK TRACK
14280         RTN   CYL35                                       13136 36 13252 00706
14290*        TURN SW 2 ON - OFF ADVANCE TO NEXT HEAD
14300         BNC2  *-12,,,              SW 2 OFF LOOP HEAD     13148 47 13136 00200
14310         BC2   *                                           13160 46 13160 00200
14320         AM    AL0+11,05                                   13172 11 13087 -0005
14330         CM    AL0+11,HASAD+50,,    CHK ALL HDS READ       13184 14 13087 J3337
14340         BNE   AL0                                         13196 47 13076 01200
14350         BC4   AL0-12,,,            SW 4 ON GO BACK TO HD 0
                                                                13208 46 13064 00400
14360         H                                                 13220 48 00000 00000
14370         BC4   RSTRT                                       13232 46 00402 00400
14380         B7    START                                       13244 49 03616 00000
14390 CYL35   DDA   ,1,07000,20,RDAREA                          13252 00006 1-7000
                                                                13258 00003 -20
                                                                13261 00005 J5000
14400 ALHD    DAC   08,HEAD  9'                                 13267 00016
14410 END1    DC    01,0                                        13282 00001
14420 HASAD   DSA   07000,07060,07080,07140,07160,07020,07040,07100,07120,07180
                                                                13287 00005 -7000
                                                                13292 00005 -7060
                                                                13297 00005 -7080
                                                                13302 00005 -7140
                                                                13307 00005 -7160
                                                                13312 00005 -7020
                                                                13317 00005 -7040
                                                                13322 00005 -7100
                                                                13327 00005 -7120
                                                                13332 00005 -7180
14430         TCD   START                                       03616
14440*
14450*
14460*
14470*                  1 CYCLE ENTRY - WRITE
14480*
```

```
14490*          IMPORTANT-
14500*               IF THE OPERATION HANGS-UP (FAILS TO GIVE
14510*               AN I-CYCLE ENTRY),BOTH RESET AND RELEASE
14520*               MUST BE PRESSED SIMULTANEOUSLY.   THEN PRESS START
14530*
14540*
14550          DORG START                                          03616
14560 START1   RCTY                                                03616 34 00000 00102
14570          RCTY                                                03628 34 00000 00102
14580          WATY NEWNAM,,,          TYPE PART 2 NAME            03640 39 08449 00100
14590 RT04A    TFM  RSTRT+6,*,,         LOAD RESTART ADRS          03652 16 00408 -3652
14600*          READ-IN  EVEN PARITY  8,4 BITS
14610 RNTB7    NOP  R6B1                                           03664 41 03712 00000
14620          RA   INVP-1,500,,       5 = CARD,3 = PAPER TAPE
                                                                   03676 37 13790 00500
14630          TDM  INVP-2,0,11                                    03688 15 13789 0000-
14640          TD   INVP,INVP-1                                    03700 25 13791 13790
14650 R6B1     TDM  RNTB7+1,9,,        CHANGE NOP TO B             03712 15 03665 00009
14660          BTM  INDRST,*+12,,      RESET INDICATORS            03724 17 02904 -3736
14670          TD   CYL3W,460                                      03736 25 08548 00460
14680          TD   RDCF,460                                       03748 25 10192 00460
14690          TD   SDCF,460,,         INSERT DRIVE CODE           03760 25 11854 00460
14700          TD   CYLOV,460                                      03772 25 13394 00460
14710          TD   SABOK,460                                      03784 25 13622 00460
14720*
14730*       ****CHECK AT CYL 03
14740*
14750          TFM  RSTRT+6,*,,        LOAD RESTART ADRS           03796 16 00408 -3796
14760          TFM  CYL3+5,600                                     03808 16 03565 -0600
14770          SK   CYL3,,,            SEEK CYL 03                 03820 34 03560 00701
14780          BC1  *-12                                           03832 46 03820 00100
14790          RCTY                                                03644 34 00000 00102
14800          WATY TSWC31,,,          CHK HEADS AT CYL 03         03856 39 03441 00100
14810          BTM  YESNO,PSW,,        GET ANSWER                  03868 17 02996 -3167
14820          BNR  *+20,PSW,,         RM = YES                    03880 45 03900 03167
14830          B7   WLP,,,                                         03892 49 03960 00000
14840          BTM  ERRN,167                                       03900 17 03220 -0167
14850          BNC2 RSTRT                                          03912 47 00402 00200
14860          BTM  REFN,52,10,        GO TYPE REF   K             03924 17 03164 000N2
14870          H                                                   03936 48 00000 00000
14880 ZERO6    DC   10,0,*                                         03947 00010
14890          BC4  RSTRT                                          03948 46 00402 00400
14900*
14910 WLP      BTM  REFN,51,10,        GO TYPE REF   J             03960 17 03164 000N1
14920          H                                                   03972 48 00000 00000
14930          TFM  RSTRT+6,*                                      03984 16 00408 -3984
14940          BTM  TYPE,ZZ6 ,,        TYPE  WR I-CYCLE ENTRY
                                                                   03996 17 03096 -4465
14950 WLP1     CM   *+11,0,10,         TURN ON E/Z                 04008 14 04019 000-0
14960          WDN  DCFSC0,,,          WDN (SC = 0)                04020 38 03588 00702
14970          BE   WLP2                                           04032 46 04092 01200
```

```
14980          BTM   ERRN,200,,          TYPE ERROR                 04044 17 03220 -0200
14990          WDN   DCFSC0,,,           WDN (SC = 0)               04056 38 03588 00702
15000          BNC2  *-12                                           04068 47 04056 00200
15010          B     RSTRT                                          04080 49 00402 00000
15020*
15030 WLP2     CM    *+11,0,10                                      04092 14 04103 000-0
15040          WDN   ADRSCK,,,           WDN (ADRS CHK)             04104 38 03574 00702
15050          BE    W42                                            04116 46 04176 01200
15060          BTM   ERRN,201,,          TYPE ERROR                 04128 17 03220 -0201
15070          WDN   ADRSCK,,,           WDN (ADRS CHK)             04140 38 03574 00702
15080          BNC2  *-12                                           04152 47 04140 00200
15090          B     RSTRT                                          04164 49 00402 00000
15100*               TURN ON SWITCHES
15110 W42      BI    *+12,3600                                      04176 46 04188 03600
15120*
15130          TFM   CYL3W+5,600                                    04188 16 08553 -0600
15140 WLP3     CM    *+11,0,10                                      04200 14 04211 000-0
15150          WTN   CYL3W,,,            WTN (NORMAL)               04212 38 08548 00706
15160          BE    WLP4                                           04224 46 04264 01200
15170          BTM   ERRN,202,,          TYPE ERROR                 04236 17 03220 -0202
15180          WTN   CYL3W,,,            WTN (NORMAL)               04248 38 08548 00706
15190          BNC2  *-12                                           04260 47 04248 00200
15200          B     RSTRT                                          04272 49 00402 00000
15210*
15220 WLP4     CM    *+11,0,10                                      04284 14 04295 000-0
15230          CTN   CYL3W,,,            CTN (NORMAL)               04296 36 08548 00707
15240          BE    WLP5                                           04308 46 04368 01200
15250          BTM   ERRN,203,,          TYPE ERROR                 04320 17 03220 -0203
15260          CTN   CYL3W,,,            CTN (NORMAL)               04332 36 08548 00707
15270          BNC2  *-12                                           04344 47 04332 00200
15280          B     RSTRT                                          04356 49 00402 00000
15290*
15300 WLP5     CM    *+11,0,10                                      04368 14 04379 000-0
15310          TD    RDAREA+2100,DATAA,, INSERT GM                  04380 25 17100 00811
15320          RTGN  CYL3,,,             WLR OP (NORMAL)            04392 36 03560 00704
15330          BE    RT05                                           04404 46 04496 01200
15340          BTM   ERRN,204,,          TYPE ERROR                 04416 17 03220 -0204
15350          RTGN  CYL3,,,             WLR OP (NORMAL)            04428 36 03560 00704
15360          BNC2  *-12                                           04440 47 04428 00200
15370          B     RSTRT                                          04452 49 00402 00000
15380*
15390*
15400 ZZ6      DAC   16,-WR I-CYC ENTRY'                            04465 00032
15410*
15420*
15430*         THIS ROUTINE CHECKS THAT THE WRITE TRANSLATOR OR
15440*         FBR OUTPUT GATING *SERIALIZER* CIRCUITRY IS FUNCTIONING.
15450*         2100 EVEN PARITY 8-4 BITS ARE WRITTEN TO THE DISK. THERE
15460*         THE BITS GO THROUGH THE WRITE TRANSLATOR WHICH BLOCK THE
15470*         8-4 BITS. THEREFORE ONLY S1 AND S2 BITS ARE WRITTEN *EXCEPT
15480*         FOR THE FIRST ADDRESS DIGIT WHICH IS C&2 BITS* . WHEN THE
```

```
15490*          DATA IS READ BACK INTO [illegible] FOR INTO THE READ REGISTER
15500*          WILL FORCE 8-6 BITS BACK INTO MEMORY. IF ANY BIT LINE IS
15510*          SHORTED IT WILL SHOW UP.
15520*          ALSO READ AND WRITE PARITY LATCHES ARE CHECKED.
15530*
15540 RT05    TFM  RSTRT+6,*,,          LOAD RESTART ADRS      04496 16 00408 -4496
15550         BTM  TYPE,ZZ16,,          TYPE BLANK XFER        04508 17 03096 -5479
15560*          GENERATE 2100 CHARACTERS
15570 R7A1    TFM  CYL3+5,600                                  04520 16 03565 -0600
15580         TF   CYL3W+5,*-1,,        INITIALIZE             04532 26 08553 04531
15590 R7A3    TF   BOXX,INVP                                   04544 26 08547 13791
15600         BTM  GENX,*+12,,          GENERATE 2100 4,8 BITS
                                                               04556 17 08022 -4568
15610         BTM  INDRST,*+12,,        RESET INDICATORS       04568 17 02904 -4580
15620 R7D2    BTM  RSTRDA,*,,           RESET READ AREA        04580 17 08090 -4580
15630         BTM  INDRST,,,            RESET INDICATORS       04592 17 02904 -0000
15640*          WRITE DISK TRACK
15650         WTN  CYL3W,,,             WRITE ONLY S1 AND S2 BITS
                                                               04604 38 08548 00706
15660         BC1  *-12                                        04616 46 04604 00100
15670*          CHECK THAT WR CHK CAME ON
15680         BI   R7D1,700                                    04628 46 05272 00700
15690*          READ TRACK AND FIND OUT WHY WR CHK WAS NOT TURNED ON
15700         BTM  INDRST,,,            RESET INDICATORS       04640 17 02904 -0000
15710         RTN  CYL3                                        04652 36 03560 00706
15720         BI   R7D3,600                                    04664 46 05236 00600
15730*           CHECK FOR SELECT LOCK
15740 R7SL    SK   CYL3W                                       04676 34 08548 00701
15750         BNI  R7A4,3600,,,                                04688 47 05168 03600
15760*         SELECT LOCK IS ON
15770         BTM  REFN,59,10,,                                04700 17 03164 000N9
15780         H                                                04712 48 00000 00000
15790         RDN  RESET,,,                                    04724 36 03602 00702
15800         WTN  CYL3W                                       04736 38 08548 00706
15810         SK   CYL3W                                       04748 34 08548 00701
15820         AM   *+9,1,810                                   04760 11 04769 0-0-1
15830         BV   R7SLE                                       04772 46 04988 01400
15840         BNI  *-48,3600,,,                                04784 47 04736 03600
15850         BTM  REFN,62,10,,                                04796 17 03164 00002
15860         H                                                04808 48 00000 00000
15870 R7SL1   RDN  RESET,,,                                    04820 36 03602 00702
15880         WTN  CYL3W                                       04832 38 08548 00706
15890         SK   CYL3W                                       04844 34 08548 00701
15900         BI   R7SL2-24,3600,,,                            04856 46 04892 03600
15910         BTM  ERRN,170,,                                  04868 17 03220 -0170
15920         B    R7SL3,,,                                    04880 49 05084 00000
15930         BTM  REFN,63,10,,                                04892 17 03164 00003
15940         H                                                04904 48 00000 00000
15950 R7SL2   RDN  RESET                                       04916 36 03602 00702
15960         WTN  CYL3W                                       04928 38 08548 00706
15970         SK   CYL3W                                       04940 34 08548 00701
```

```
15980          BI    R7SLE,3600,,,                                  04952 46 04988 03600
15990          BTM   ERRN,171,,,                                    04964 17 03220 -0171
16000          B     R7SL3,,,                                       04976 49 05084 00000
16010 R7SLE    RTN   CYL3                                           04988 36 03560 00706
16020          SK    CYL3                                           05000 34 03560 00701
16030          AM    *+9,1,810                                      05012 11 05021 0-0-1
16040          BV    *+24                                           05024 46 05048 01400
16050          BNI   R7A1,3600,,                                    05036 47 04520 03600
16060          BTM   REFN,43,10,                                    05048 17 03164 000M3
16070          H                                                    05060 48 00000 00000
16080          B     *-12                                           05072 49 05060 00000
16090 R7SL3    BC2   *+48,,,                                        05084 46 05132 00200
16100          RDN   RESET,,,                                       05096 36 03602 00702
16110          WTN   CYL3W,,,                                       05108 38 08548 00706
16120          B     *-36,,,                                        05120 49 05084 00000
16130          BTM   REFN,69,10,,                                   05132 17 03164 00009
16140          H                                                    05144 48 00000 00000
16150          B     RT05                                           05156 49 04496 00000
16160 R7A4     BTM   ERRN,210,711,,,                                05168 17 03220 -021-
16170          TD     19999,RDAREA+7                                05180 25 19999 15007
16180 TBIT     WATY  BIT,,,              TYPE FAILING BIT           05192 39 05465 00100
16190          DNTY  19999,,,            TYPE BIT                   05204 35 19999 00100
16200          TFM   19999,0,,           RESET DUMP AREA            05216 16 19999 -0000
16210          B7    RE3                                            05228 49 07830 00000
16220 R7D3     BTM   ERRN,211,,          GO TYPE ERROR              05236 17 03220 -0211
16230          BNC2  R7D2                                           05248 47 04580 00200
16240          B     RSTRT                                          05260 49 00402 00000
16250 R7D1     BTM   RSTIND,,,           RESET INDICATORS           05272 17 02904 -0000
16260*           READ TRACK BACK INTO CORE
16270          RTN   CYL3                                           05284 36 03560 00706
16280          BC1   *-12                                           05296 46 05284 00100
16290          BI    BNI1,600                                       05308 46 05356 00600
16300          BTM   ERRN,212,,          GO TYPE ERROR              05320 17 03220 -0212
16310          BNC2  R7D2                                           05332 47 04580 00200
16320          B     RSTRT                                          05344 49 00402 00000
16330*           CHECK DATA READ
16340 BNI1     BI    *+44,1600,,                                    05356 46 05400 01600
16350          BTM   ERRN,213,711,,,                                05368 17 03220 -021L
16360          TD     19999,RDAREA+6                                05380 25 19999 15006
16370          B7    TBIT                                           05392 49 05192 00000
16380 BNI2     BI    *+44,1700,,                                    05400 46 05444 01700
16390          BTM   ERRN,214,711,,,                                05412 17 03220 -021M
16400          TD     19999,RDAREA+7                                05424 25 19999 15007
16410          B7    TBIT                                           05436 49 05192 00000
16420*
16430          BC4   R7A1                                           05444 46 04520 00400
16440          B7    RT06                                           05456 49 05502 00000
16450*
16460*
16470*           DATA AND CONSTANTS
16480*
```

```
16490 BIT     DAC  07, BIT  ,                                    05465 00014
16500 ZZ16    DAC  12,-BLANK XFER,                               05479 00024
16510*
16520*
16530*          THIS ROUTINE CHECKS FOR CORRECT DATA TRANSFER
16540*
16550*          1.RD/WR  DISK TRACK INSTRUCTION IS USED.
16560*          2.NO DISTINCTION IS MADE BETWEEN SECTOR
16570*            ADDRESS AND DATA. THAT IS THE DATA
16580*            RECORD AND INDELIBLE ADDRESS CONTAIN
16590*            THE SAME CHARACTERS.
16600*          3.THE WRITE ADDRESS SWITCH AND COMPARE
16610*            DISABLE SWITCH MUST BE ON (OUT).
16620*          4. 2100 CHARACTERS ARE WRITTEN AND READ.
16630*          DATA IS WRITTEN AND IS READ BACK, AND
16640*            THEN THE TWO RECORDS ARE COMPARED
16650*            ONLY THE FIRST 105 CHAR OF DATA
16660*            RECORDS ARE COMPARED. THIS IS BECAUSE
16670*            WR CHK DISCONNECTS AND RTN WILL READ
16680*            BACK THE COMPLETE RECORD.
16690*          6.DATA RECORDS-
16700*                  PHASE                  DATA
16710*                    A                     11
16720*                    B                FLAG 22
16730*                    C                     44
16740*                    D                FLAG 88
16750*                    E                FLAG 00
16760*                    F                     RM
16770*                    G                FLAG RM
16780*                    H                     NUM BLNK
16790*                    I                FLAG GM
16800*
16810*
16820 RT06    TFM  RSTRT+6,*,,          LOAD RESTART           05502 16 00408 -5502
16830         BTM  TYPE,ZZ7 ,,          TYPE  WR/RD DATA XFER  05514 17 03096 -8485
16840         SF   SFS                                         05526 32 08537 00000
16850         SF   SFS+1                                       05538 32 08538 00000
16860         SF   SFS+6                                       05550 32 08543 00000
16870         SF   SFS+7                                       05562 32 08544 00000
16880         TF   WRM,Z210                                    05574 26 08699 03947
16890         TF   EVM,Z210                                    05586 26 08709 03947
16900         TF   ODM,Z210,,           RESET DATA             05598 26 08719 03947
16910         TF   RDM,Z210,,             TRANSFER MAPS        05610 26 08729 03947
16920         TF   XFM,Z210                                    05622 26 08739 03947
16930*          INITIALIZE FOR DATA TRANSFER
16940 RT06A   TFM  CYL3+5,600,,         SET UP FOR CYL 03      05634 16 03565 -0600
16950         TFM  WRM1+6,WRM-8                                05646 16 05796 -8691
16960         TFM  EVM1+6,EVM-8                                05658 16 05868 -8701
16970         TFM  ODM1+6,ODM-8,,       INITIALIZE  TDM-S      05670 16 05904 -8711
16980         TFM  RDM1+6,RDM-8                                05682 16 05940 -8721
16990         TFM  XFM1+6,XFM-8                                05694 16 06176 -8731
```

```
17000          TFM   *+23,DATAX                                  05706 16 05729 -8520
17010 R4F3     TF    BOXX,DATAX                                  05718 26 08547 08520
17020          BTM   GENX,*+12,,          GO GENERATE 2100 CHAR  05730 17 08022 -5742
17030*           WRITE DISK TRACK
17040          TF    CYL3W+5,CYL3+5                              05742 26 08553 03565
17050          BTM   INDRST,,,            RESET INDICATORS       05754 17 02904 -0000
17060 R4F4     WTN   CYL3W                                       05766 38 08548 00706
17070          BNI   *+24,700,,           CHK FOR WRITE CK       05778 47 05802 00700
17080 WRM1     TDM   99999,1                                     05790 15 99999 00001
17090          TDM   ERSWX,0                                     05802 15 05811 00000
17100 ERSWX    DS    ,*-2                                        05811 00000
17110          BTM   RSTRDA,*+12                                 05814 17 08090 -5826
17120          BTM   INDRST,,,            RESET INDICATORS       05826 17 02904 -0000
17130*           READ DISK TRACK      HD 0
17140          RTN   CYL3                                        05838 36 03560 00706
17150          BNI   *+36,1600,,          EVEN PARITY CK         05850 47 05886 01600
17160 EVM1     TDM   99999,1                                     05862 15 99999 00001
17170          TDM   ERSWX,1                                     05874 15 05811 00001
17180          BNI   *+36,1700,,          ODD PARITY CK          05886 47 05922 01700
17190 ODM1     TDM   99999,1                                     05898 15 99999 00001
17200          TDM   ERSWX,1                                     05910 15 05811 00001
17210          BNI   *+24,0600,,          READ CHK               05922 47 05946 00600
17220 RDM1     TDM   99999,1                                     05934 15 99999 00001
17230*           COMPARE WRITE DATA WITH READ DATA
17240          BD    XFM2,ERSWX,,         CHK FOR PARITY ER = NO COMPARE
                                                                 05946 43 06190 05811
17250          TF    *+23,BOXX                                   05958 26 05981 08547
17260          SF    *+10,,,                                     05970 32 05980 00000
17270          TFM   *+23,RDAREA+1                               05982 16 06005 J5001
17280 R4F1     C     *-13,RDAREA+1,,      COMPARE                05994 24 05981 15001
17290          BNE   XFM1                                        06006 47 06170 01200
17300          AM    R4F1+11,02,10                               06018 11 06005 000-2
17310          CM    R4F1+11,RDAREA+0105,,CHK 1ST SCTR CMPRD     06030 14 06005 J5105
17320          BL    R4F1                                        06042 47 05994 01300
17330 R4F5     AM    R4F3+11,03,10                               06054 11 05729 000-3
17340          AM    WRM1+6,01,10                                06066 11 05796 000-1
17350          AM    EVM1+6,01,10                                06078 11 05868 000-1
17360          AM    ODM1+6,01,10,        UPDATE TDM-S           06090 11 05904 000-1
17370          AM    RDM1+6,01,10                                06102 11 05940 000-1
17380          AM    XFM1+6,01,10                                06114 11 06176 000-1
17390          CM    R4F3+11,DATAX+15,,   CHK 1,2,4,8,F BITS SENT
                                                                 06126 14 05729 -8535
17400          BNE   R4F3                                        06138 47 05718 01200
17410          BV    *+12,,,              TURN OFF OVFLO         06150 46 06162 01400
17420          B7    RGNB,,,              GO SEND RM,GM,NUM BLANK
                                                                 06162 49 06222 00000
17430 XFM1     TDM   99999,1                                     06170 15 99999 00001
17440          B7    R4F5                                        06182 49 06054 00000
17450 XFM2     TF    *+18,XFM1+6                                 06190 26 06208 06176
17460          TDM   99999,2                                     06202 15 99999 00002
17470          B7    R4F5                                        06214 49 06054 00000
```

DT 0023
PN 2172366
EC 412531

```
17480*
17490*          SEND RM,GM,RSET RUN BLNK
17500*
17510*
17520*          WRITE-READ DISK TRACK,2100 RM
17530*
17540 RGNB    TFM   RSTRT+6,*,,          LOAD RESTART ADRS      06222 16 00408 -6222
17550         TF    BOXX,DATAX+15                               06234 26 08547 08535
17560         BTM   GENX,*+12,,              GO GENERATE 2100RM
                                                                06246 17 08022 -6258
17570*          WRITE DISK TRACK
17580         WTN   CYL3W                                       06258 38 08548 00706
17590         BNI   *+24,700,,           WRITE CHK              06270 47 06294 00700
17600         TDM   WRM-3,1                                     06282 15 08696 00001
17610         BTM   RSTRDA,*+12,,            GO RESET READ AREA
                                                                06294 17 08090 -6306
17620         BTM   INDRST                                      06306 17 02904 -0000
17630*          READ DISK TRACK
17640         RTN   CYL3                                        06318 36 03560 00706
17650         BNI   *+24,1600,,          EVEN PARITY CK         06330 47 06354 01600
17660         TDM   EVM-3,1                                     06342 15 08706 00001
17670         BNI   *+24,1700,,          ODD PARITY CK          06354 47 06378 01700
17680         TDM   ODM-3,1                                     06366 15 08716 00001
17690         BNI   *+24,0600,,          READ CHK               06378 47 06402 00600
17700         TDM   RDM-3,1                                     06390 15 08726 00001
17710*          CHECK READ AREA FOR RM
17720         TFM   *+23,RDAREA                                 06402 16 06425 J5000
17730 R4R1    TD    BOX,RDAREA,,             MOVE DATA          06414 25 00805 15000
17740         BNR   R4R2,BOX,,               CHK FOR RM         06426 45 06470 00805
17750         BNF    *+20,BOX,,              CHK FOR FLAG       06438 44 06458 00805
17760         B7    R4R2                                        06450 49 06470 00000
17770         BNG   R4R4,BOX,,               CHK FOR GM         06458 55 06490 00805
17780 R4R2    TDM   XFM-3,1                                     06470 15 08736 00001
17790         B7    R4R3                                        06482 49 06526 00000
17800 R4R4    AM    R4R1+11,01                                  06490 11 06425 -0001
17810         CM    R4R1+11,RDAREA+0105,,CHK DONE               06502 14 06425 J5105
17820         BL    R4R1                                        06514 47 06414 01300
17830*          WRITE-READ DISK  2100 FLAG RM
17840 R4R3    TFM   RSTRT+6,*,,              LOAD RESTART ADRS  06526 16 00408 -6526
17850         TF    BOXX,DATAX+18                               06538 26 08547 08538
17860         BTM   GENX,*+12,,          GO GEN 2100 FLG RM     06550 17 08022 -6562
17870*          WRITE DISK TRACK
17880 R4C1    WTM   CYL3W                                       06562 38 08548 00706
17890         BNI   *+24,0700,,          WRITE CHK              06574 47 06598 00700
17900         TDM   WRM-2,1                                     06586 15 08697 00001
17910         BTM   RSTRDA,*+12,,        GO RESET READ AREA     06598 17 08090 -6610
17920         BTM   INDRST,*+12,,        RESET INDICATORS       06610 17 02904 -6622
17930*          READ DISK TRACK
17940         RTN   CYL3                                        06622 36 03560 00706
17950         BNI   *+24,1600,,          EVEN PARITY            06634 47 06658 01600
17960         TDM   EVM-2,1                                     06646 15 08707 00001
```

```
17970          BNI   *+24,1700,,          ODD PARITY                 06658 47 06682 01700
17980          TDM   ODM-2,1                                         06670 15 08717 00001
17990          BNI   *+24,0600,,          READ CHK                   06682 47 06706 00600
18000          TDM   RDM-2,1                                         06694 15 08727 00001
18010*           CHECK READ AREA FOR FLAG RM
18020          TFM   *+23,RDAREA                                     06706 16 06729 J5000
18030 R4C2     TD    BOX,RDAREA,,                                    06718 25 00805 15000
18040          BNR   *+36,BOX,,           CHK FOR 8,2 BITS           06730 45 06766 00805
18050          BNF   *+24,BOX,,           CHK FOR  F   BIT           06742 44 06766 00805
18060          BNG   R4F6,BOX,,           CHK FOR NOT 4,1 BITS       06754 55 06786 00805
18070          TDM   XFM-2,1                                         06766 15 08737 00001
18080          B7    R4C6                                            06778 49 06822 00000
18090 R4F6     AM    R4C2+11,01,10                                   06786 11 06729 000-1
18100          CM    R4C2+11,RDAREA+0105,,SCAN CMPLTE RD AREA        06798 14 06729 J5105
18110          BL    R4C2                                            06810 47 06718 01300
18120*
18130*           WRITE - READ DISK TRACK,2100 NUM BLNK
18140*
18150 R4C6     TFM   RSTRT+6,*,,          LOAD RESTART ADRS          06822 16 00408 -6822
18160          TF    BOXX,DATAX+21                                   06834 26 08547 08541
18170          BTM   GENX,*+12,,          GO GEN 2100 NUM BLK        06846 17 08022 -6858
18180*           WRITE DISK TRACK
18190 R4C7     WTN   CYL3W                                           06858 38 08548 00706
18200          BNI   *+24,0700,,          WRITE CHK                  06870 47 06894 00700
18210          TDM   WRM-1,1                                         06882 15 08698 00001
18220          BTM   RSTRDA,*+12,,        GO RESET READ AREA         06894 17 08090 -6906
18230          BTM   INDRST,,,            RESET INDICATORS           06906 17 02904 -0000
18240*           READ DISK TRACK
18250          RTN   CYL3                                            06918 36 03560 00706
18260          BNI   *+24,1600,,          MBR-E                      06930 47 06954 01600
18270          TDM   EVM-1,1                                         06942 15 08708 00001
18280          BNI   *+24,1700,,          MBR-O                      06954 47 06978 01700
18290          TDM   ODM-1,1                                         06966 15 08718 00001
18300          BNI   *+24,0600,,          READ CHK                   06978 47 07002 00600
18310          TDM   RDM-1,1                                         06990 15 08728 00001
18320*           CHECK READ AREA FOR NUMERIC BLANK -  C84
18330          TFM   *+23,RDAREA                                     07002 16 07025 J5000
18340 R4C9     TD    BOX,RDAREA                                      07014 25 00805 15000
18350          BNF   *+20,BOX,,           NO F BIT                   07026 44 07046 00805
18360          B7    R4C8                                            07038 49 07098 00000
18370          BD    *+20,BOX,,           8,4,2,OR 1 BIT             07046 43 07066 00805
18380          B7    R4C8                                            07058 49 07098 00000
18390          BNG   *+20,BOX,,           NO 8,4,2, AND 1 BIT        07066 55 07086 00805
18400          B7    R4C8                                            07078 49 07098 00000
18410          BNR   R4F7,BOX,,           NO 8,2 BITS                07086 45 07118 00805
18420 R4C8     TDM   XFM-1,1                                         07098 15 08738 00001
18430          B7    R4F8                                            07110 49 07154 00000
18440 R4F7     AM    R4C9+11,01,10                                   07118 11 07025 000-1
18450          CM    R4C9+11,RDAREA+0105,,SCAN READ AREA             07130 14 07025 J5105
18460          BL    R4C9                                            07142 47 07014 01300
18470*
```

```
18480*          WRITE - READ  DISK TRACK,FLAG GM
18490*
18500 R4F8    TFM   RSTRT+6,*,,          LOAD RESTART ADRS      07154 16 00408 -7154
18510         TF    BOXX,DATAX+24                               07166 26 08547 08544
18520         BTM   GENX,*+12,,          GO GEN 2100 FLG GM     07178 17 08022 -7190
18530         BTM   INDRST,,,            RESET INDICATORS       07190 17 02904 -0000
18540*          WRITE DISK TRACK
18550 R4C3    WTN   CYL3W                                       07202 38 08548 00706
18560         BNI   *+24,0700,,          WR CHK                 07214 47 07238 00700
18570         TDM   WRM,1                                       07226 15 08699 00001
18580         BTM   RSTRDA,*+12,,        GO RESET READ AREA     07238 17 08090 -7250
18590         BTM   INDRST,*+12,,        RESET INDICATORS       07250 17 02904 -7262
18600*          READ DISK TRACK
18610         RTN   CYL3                                        07262 36 03560 00706
18620         BNI   *+24,1600,,          MBR-E                  07274 47 07298 01600
18630         TDM   EVM,1                                       07286 15 08709 00001
18640         BNI   *+24,1700,,          MBR-O                  072 8 47 07322 01700
18650         TDM   ODM,1                                       07310 15 08719 00001
18660         BNI   *+24,0600,,          READ CK                07322 47 07346 00600
18670         TDM   RDM,1                                       07334 15 08729 00001
18680*          CHECK READ AREA FOR FLAG GM
18690         TFM   *+23,RDAREA                                 07346 16 07369 J5000
18700 R4C4    TD    BOX,RDAREA                                  07358 25 00805 15000
18710         BNF   R4C5,BOX,,           CHK FOR FLAG           07370 44 07438 00805
18720         BNG   R4C5,BOX,,           CHK FOR GM             07382 55 07438 00805
18730         AM    R4C4+11,01,10                               07394 11 07369 000-1
18740         CM    R4C4+11,RDAREA+0105,,SCAN RD AREA            07406 14 07369 J5105
18750         BL    R4C4                                        07418 47 07358 01300
18760         B7    R4F9                                        07430 49 07450 00000
18770 R4C5    TDM   XFM,1                                       07438 15 08739 00001
18780*
18790*
18800*
18810 R4F9    TFM   *+23,WRM-8                                  07450 16 07473 -8691
18820         BD    DIGFND,99999,,       SCAN MAPS FOR DIG = ERROR
                                                                07462 43 07530 99999
18830         AM    *-1,01,10                                   07474 11 07473 000-1
18840         CM    *-13,XFM+1,,         CHK SCAN DONE          07486 14 07473 -8740
18850         BNE   *-36                                        07498 47 07462 01200
18860         BC4   RT06+24                                     07510 46 05526 00400
18870         B7    RT6A                                        07522 49 08740 00000
18880*
18890*          ERROR CONDITION HAS BEEN FOUND
18900*          OUTPUT ERROR MAPS. 1 = ERROR
18910*
18920 DIGFND  BTM   ERRN,220,711,,                               07530 17 03220 -022-
18930         RCTY                                              07542 34 00000 00102
18940         SPTY                                              07554 34 00000 00101
18950         SPTY                                              07566 34 00000 00101
18960         TD    19991,DATAX                                 07578 25 19991 08520
18970         TD    19992,DATAX+3                               07590 25 19992 08523
```

```
18980          TD    19993,DATAX+6                                 07602 25 19993 08526
18990          TD    19994,DATAX+9                                 07614 25 19994 08529
19000          TD    19995,DATAX+12,,      MOVE DATA               07626 25 19995 08532
19010          TD    19996,DATAX+15                                07638 25 19996 08535
19020          TD    19997,DATAX+18                                07650 25 19997 08538
19030          TD    19998,DATAX+21                                07662 25 19998 08541
19040          TD    19999,DATAX+24                                07674 25 19999 08544
19050          DNTY  19991,,,              DUMP HEADING            07686 35 19991 00100
19060          TFM   RE1+11,WRM                                    07698 16 07757 -8699
19070          TFM   RE1-6,VERTO                                   07710 16 07740 -8661
19080          RCTY                                                07722 34 00000 00102
19090          WATY  99999,,,              TYPE LABEL              07734 39 99999 00100
19100 RE1      TF    19999,99999                                   07746 26 19999 99999
19110          DNTY  19991,,,              DUMP ERROR MAPS         07758 35 19991 00100
19120          AM    RE1+11,010,10                                 07770 11 07757 000J0
19130          AM    RE1-06,06,10                                  07782 11 07740 000-6
19140          CM    RE1+11,XFM+10,,       CHK DONE                07794 14 07757 -8749
19150          BNE   RE1-24                                        07806 47 07722 01200
19160          TFM   19999,0,,             RESET DUMP AREA         07818 16 19999 -0000
19170*
19180*           REQUEST AND ACCEPT DIGIT FOR WR-RD
19190*
19200 RE3      TFM   RSTRT+6,*,,           LOAD RESTART            07830 16 00408 -7830
19210          RCTY                                                07842 34 00000 00102
19220          WATY  GETD,,,               REQUEST DATA            07854 39 08591 00100
19230          RNTY  BOXX-1,,,             ACCEPT DIGIT            07866 36 08546 00100
19240          TD    BOXX,BOXX-1                                   07878 25 08547 08546
19250          TDM   BOXX-2,0,11                                   07890 15 08545 0000-
19260*           GO GENERATE 2100 CHARACTERS
19270          BTM   GENX,*+12                                     07902 17 08022 -7914
19280 RE2      BTM   INDRST,,,             RESET INDICATORS        07914 17 02904 -0000
19290*           WRITE DISK TRACK
19300          WTN   CYL3W                                         07926 38 08548 00706
19310*           READ DISK TRACK
19320          BTM   INDRST,,,             RESET INDICATORS        07938 17 02904 -0000
19330          RTN   CYL3                                          07950 36 03560 00706
19340*
19350          BC1   RE2                                           07962 46 07914 00100
19360          BTM   R4ER,45,,             OUTPUT READ DATA        07974 17 08158 -0045
19370*
19380          BC4   RE2                                           07986 46 07914 00400
19390          BNC2  RE3                                           07998 47 07830 00200
19400          B7    RT05                                          08010 49 04496 00000
19410*
19420*           GENERATOR ROUTINE FOR GENERATING
19430*           THE 2100 CHAR RECORDS
19440*
19450          DS    5                                             08021 00005
19460 GENX     TFM   *+18,WRAREA+2099                              08022 16 08040 J9299
19470          TF    WRAREA+2099,BOXX,,    INSERT 2 CHAR FIELD     08034 26 19299 08547
19480          SM    *-6,02,10                                     08046 12 08040 000-2
```

```
19990*
20000 NEWNAM DAC  18,PART 2 OF DT 0023'                    08449 00036
20010 ZZ7    DAC  17,-WR/RD DATA XFER'                     08485 00034
20020 DATAX  DC   03,011                                   08520 00003
20030        DC   01,0                                     08521 00001
20040        DC   02,-22                                   08523 00002
20050        DC   03,44                                    08526 00003
20060        DC   01,0                                     08527 00001
20070        DC   02,-88                                   08529 00002
20080        DC   01,0                                     08530 00001
20090        DC   02,-00                                   08532 00002
20100        DC   01,0                                     08533 00001
20110        DC   01,'                                     08534 00001
20120        DC   01,'                                     08535 00001
20130        DC   01,0                                     08536 00001
20140 SFS    DC   01,'                                     08537 00001
20150        DC   01,'                                     08538 00001
20160        DC   01,0                                     08539 00001
20170        DNB  02                                       08541 00002
20180        DC   01,0                                     08542 00001
20190        DGM                                           08543 00001
20200        DGM                                           08544 00001
20210 BOXX   DC   03,0                                     06547 00003
20220 CYL3W  DDA  ,1,99999,020,WRAREA                      08548 00006 1R9999
                                                           08554 00003 -20
                                                           08557 00005 J7200
20230 TWR    DAC  06,WTN  '                                08563 00012
20240 TRD    DAC  08,  RTN  '                              08575 00016
20250 Z210   DS   ,ZERO6                                   03947 00000
20260 GETD   DAC  22,KEY IN WR-RD DIGIT   '                08591 00044
20270 ZZ8    DAC  13,-WR HEAD MAP'                         08635 00026
20280 VERTO  DAC  03,W '                                   08661 00006
20290        DAC  03,E '                                   08667 00006
20300        DAC  03,O '                                   08673 00006
20310        DAC  03,R '                                   08679 00006
20320        DAC  03,X '                                   08685 00006
20330 WRM    DS   10                                       08699 00010
20340 EVM    DS   10                                       08709 00010
20350 ODM    DS   10                                       08719 00010
20360 RDM    DS   10                                       08729 00010
20370 XFM    DS   10                                       08739 00010
20380*
20390*
20400*
20410*          THIS ROUTINE CHECKS THAT DATA (FLAG GM)
20420*          CAN BE WRITTEN WITH EACH HEAD.
20430*          AFTER THE DATA IS WRITTEN,IT IS READ BACK
20440*          INTO CORE STORAGE AND A WRITE HEAD MAP
20450*          IS GENERATED. 0 = OKAY,1 = ERROR
20460*
20470 RT6A   TFM  RSTRT+6,*,,          LOAD RESTART ADRS    08740 16 00408 -8740
```

```
20480          BTM   TYPE,2&8 ,,          TYPE  CA[illegible] MAP   08752 17 03095 -8635
20490          TF    80XX,DATA&+20                                   08764 26 08547 08544
20500          BTM   GENX,*+12,,          GENERATE 2100 FLAG GM     08776 17 08022 -8788
20510 R6H1     TFM   CYL3+5,780                                      08788 16 03565 -0780
20520          TF    19999,ZERO10,,       RESET MAP                 08800 26 19999 02897
20530          TFM   WRHD+6,19999                                    08812 16 08926 J9999
20540*           WRITE DISK TRACK
20550 WRHD1    TF    CYL3W+5,CYL3+5                                  08824 26 08553 03565
20560          WTN   CYL3W                                           08836 38 08548 00706
20570          BTM   INDRST,,,            RESET INDICATORS          08848 17 02904 -0000
20580*           READ DATA BACK
20590          RTN   CYL3                                            08860 36 03560 00706
20600          BI    *+48,0700                                       08872 46 08920 00700
20610          BI    *+36,0600,,          CHECK FOR                 08884 46 08920 00600
20620          BI    *+24,1600,,             ERROR                  08896 46 08920 01600
20630          BNI   *+48,1700                                       08908 47 08956 01700
20640 WRHD     TDM   99999,1,,            SET MAP                   08920 15 99999 00001
20650          TF    19988,CYL3+5,,       STORE SCTR ADRS           08932 26 19988 03565
20660          BTM   INDRST,,,               RESET INDICATORS       08944 17 02904 -0000
20670          SM    WRHD+6,01,10                                    08956 12 08926 000-1
20680          SM    CYL3+5,20,10,        DECR TO NEXT HD           08968 12 03565 000K0
20690          CM    CYL3+5,580,,         CHK DONE                  08980 14 03565 -0580
20700          BNE   WRHD1                                           08992 47 08824 01200
20710*
20720          TDM   19989,0,11                                      09004 15 19989 0000-
20730          CM    19999,0,10,          CHK WR HD MAP             09016 14 19999 000-0
20740          BNE   R6H2                                            09028 47 09060 01200
20750          BC4   RT6A+24                                         09040 46 08764 00400
20760          B7    RT07                                            09052 49 09180 00000
20770*
20780 R6H2     BTM   ERRN,230,,           TYPE ERROR NO.            09060 17 03220 -0230
20790          BC1   *+48                                            09072 46 09120 00100
20800          DNTY  19990,,,             DUMP MAP                  09084 35 19990 00100
20810          TFM   19999,0,,            RESET DUMP AREA           09096 16 19999 -0000
20820          H                                                     09108 48 00000 00000
20830*           DIAGNOSTIC LOOP
20840          TF    CYL3W+5,19988                                   09120 26 08553 19988
20850          WTN   CYL3W,,,             WRITE TRACK               09132 38 08548 00706
20860          BC1   *-12                                            09144 46 09132 00100
20870          BNC2  RT6A+24                                         09156 47 08764 00200
20880          B     RSTRT                                           09168 49 00402 00000
20890*
20900*
20910*           THIS ROUTINE CHECKS THE COMPARE LATCH
20920*
20930*                PHASE  A  ( CBA8421 BITS )
20940*           1. 2100 CHARACTERS ARE GENERATED ( FLAG GM )
20950*           2. WRITE FULL TRACK ( HD 0,CYL 03 )
20960*           3. READ BACK CHECK
20970*           4. CHECK RBC IND 37 IS OFF
20980*
```

```
20990 RT07   TFM  RSTRT+6,*,,          LOAD RESTART ADRS      09180 16 00408 -9180
21000        BTM  TYPE,ZZ9 ,,         TYPE  COMPARE LATCH    09192 17 03096 J0631
21010        TFM  CYL3+5,600                                 09204 16 03565 -0600
21020        TF   CYL3W+5,*-1,,       INITIALIZE             09216 26 08553 09215
21030*         GENERATE 2100 FLAG GM
21040 R7L1   TF   BOXX,DATAX+24                              09228 26 08547 08544
21050        BTM  GENX,*+12,,         GENERATE RECORD        09240 17 08022 -9252
21060        BTM  INDRST,,,           RESET INDICATORS       09252 17 02904 -0000
21070*         WRITE FULL TRACK
21080        WTN  CYL3W                                      09264 38 08548 00706
21090        BI   *-24,1900                                  09276 46 09252 01900
21100*         READ BACK CHECK COMPARE
21110        CTN  CYL3W                                      09288 36 08548 00707
21120        BNI  R7A2,3700                                  09300 47 09372 03700
21130        BTM  ERRN,240,,          GO TYPE ERROR          09312 17 03220 -0240
21140        CTN  CYL3W                                      09324 36 08548 00707
21150        BC1  *-12                                       09336 46 09324 00100
21160        BNC2 R7L1                                       09348 47 09228 00200
21170        B    RSTRT                                      09360 49 00402 00000
21180 R7A2   BTM  INDRST,,,           RESET INDICATORS       09372 17 02904 -0000
21190*
21200*                 DATA UNEQUAL- COMPARE LATCH
21210*         1. CHANGE ONE CHARACTER IN CORE
21220*         2. READ BACK COMPARE
21230*         3. RBC IND 37 SHOULD TURN ON
21240*
21250*
21260        TFM  RSTRT+6,*,,         LOAD RESTART ADRS      09384 16 00408 -9384
21270        TDM  WRAREA+1050,0,,     CHANGE DATA            09396 15 18250 00000
21280 R7X4   BTM  INDRST,,,           RESET INDICATORS       09408 17 02904 -0000
21290*         READ BACK COMPARE
21300        CTN  CYL3W                                      09420 36 08548 00707
21310        BI   R7X1,3700,,         IND SHD HAVE BEEN ON   09432 46 09600 03700
21320*         EITHER THE IND WONT TURN ON OR THE INSTRUCTION FAILED
21330*         TRY ANOTHER WAY TO TURN ON THE INDICATORS
21340 R7X3   BTM  INDRST,,,           RESET INDICATORS       09444 17 02904 -0000
21350        RTGN CYL3W,,,            READ TRACK,WLR OP      09456 36 08548 00704
21360        BI   R7X2,3700                                  09468 46 09540 03700
21370        BTM  ERRN,241,,          INDICATOR FAILED       09480 17 03220 -0241
21380        RTGN CYL3W                                      09492 36 08548 00704
21390        BC1  *-12                                       09504 46 09492 00100
21400        BNC2 R7X3                                       09516 47 09444 00200
21410        B    RSTRT                                      09528 49 00402 00000
21420 R7X2   BTM  ERRN,242,,          COMPARE LATCH FAILED   09540 17 03220 -0242
21430        CTN  CYL3W                                      09552 36 08548 00707
21440        BC1  *-12                                       09564 46 09552 00100
21450        BNC2 R7X4                                       09576 47 09408 00200
21460        B    RSTRT                                      09588 49 00402 00000
21470 R7X1   BC4  RT07+24                                    09600 46 09204 00400
21480*
21490*
```

```
21500*          RESTORE CYLINDER 03 SECTOR ADDRESSES
21510*
21520*          THE SECTOR ADDRESSES ARE WRITTEN BACK
21530*          ON CYLINDER 03. THE FIRST 5 DIGITS OF
21540*          THE SECTOR RECORD IS  A DUPLICATE OF THE
21550*          SECTOR ADDRESS. THE REST OF THE RECORD IS
21560*               00112233445566778899
21570*
21580*
21590 REST6   TFM   RSTRT+6,*,,          LOAD RESTART ADRS      09612 16 00408 -9612
21600         BTM   TYPE,ZZ10,,          TYPE  RESTORE SCTR ADDRESSES
                                                                09624 17 03096 J0661
21610         TFM   *+18,WRAREA                                 09636 16 09654 J7200
21620         TR    99999,RESDAT,,       MOVE DATA              09648 31 99999 10206
21630         AM    *-06,105                                    09660 11 09654 -0105
21640         CM    *-18,WRAREA+2100,,   CHK DONE               09672 14 09654 J9300
21650         BNE   *-36                                        09684 47 09648 01200
21660         TFM   R6SA,600                                    09696 16 08176 -0600
21670         TF    CYL3W+5,R6SA                                09708 26 08553 08176
21680*          INSERT SECTOR ADDRESSES
21690         TFM   *+18,WRAREA+4                               09720 16 09738 J7204
21700 R6S1    TF    99999,R6SA,,         INSERT SCTR ADRS       09732 26 99999 08176
21710         TF    R6S2+6,R6S1+6                               09744 26 09774 09738
21720         AM    R6S2+6,05,10                                09756 11 09774 000-5
21730 R6S2    TF    99999,R6SA,,         DUPLICATE SCTR ADRS    09768 26 99999 08176
21740         TF    *+30,R6S1+6                                 09780 26 09810 09738
21750         SM    *+18,04,10                                  09792 12 09810 000-4
21760         CF    99999,,,             CLEAR FLAG ON SCTR ADRS
                                                                09804 33 99999 00000
21770         AM    R6SA,01,10                                  09816 11 08176 000-1
21780         AM    R6S1+6,105                                  09828 11 09738 -0105
21790         CM    R6S1+6,WRAREA+2104                          09840 14 09738 J9304
21800         BNE   R6S1                                        09852 47 09732 01200
21810         BTM   INDRST,*+12,,        RESET INDICATORS       09864 17 02904 -9876
21820         SK    CYL3W,,,                                    09876 34 08548 00701
21830         WTN   CYL3W                                       09888 38 08548 00706
21840         BI    *-36,1900                                   09900 46 09864 01900
21850         AM    CYL3W+5,20                                  09912 11 08553 -0020
21860         CM    CYL3W+5,800,,        CHK ALL SCTR ADRS DONE
                                                                09924 14 08553 -0800
21870         BNE   R6S1-12                                     09936 47 09720 01200
21880         BC4   REST6+24                                    09948 46 09636 00400
21890*
21900*
21910*               PHASE  A  (RDN - SINGLE SECTOR)
21920*          THIS ROUTINE CHECKS THAT EACH SECTOR ON A
21930*          TRACK (HEAD 0) CAN BE READ. EACH SECTOR IS
21940*          READ WITH A READ DISK NUMERIC (RDN) INSTRUCTION.
21950*          EACH SECTOR ADDRESS IS DUPLICATED AS THE FIRST
21960*          5 DATA DIGITS OF THE SECTOR RECORD ON CYLINDER 03.
21970*          THIS ADDRESSES WERE DUPLICATED IN LATTER PART OF
```

```
21980*          PREVIOUS ROUTINE. AFTER A SECTOR IS READ A CHECK
21990*          IS MADE TO DETERMINE - IF ONE SECTOR WAS READ,
22000*          NO ADDRESS CHECK,AND CORRECT SECTOR WAS READ.
22010*
22020 RT08    TFM   RSTRT+6,*,,          LOAD RESTART          09960 16 00408 -9960
22030         BTM   TYPE,ZZ11,,          TYPE  READ SCTR       09972 17 03096 J0699
22040         TFM   RDCF+5,600                                 09984 16 10197 -0600
22050         TFM   RDCF+8,01,9                                09996 16 10200 00-01
22060 R8X1    TF    RDAREA+4,ZERO10-4                          10008 26 15004 02893
22070         TF    RDAREA+100,RMRST-5                         10020 26 15100 03540
22080         BTM   INDRST,*+12,,        RESET INDICATOR       10032 17 02904 J0044
22090*          READ DISK NUMERIC (1 SECTOR)
22100         RDN   RDCF                                       10044 36 10192 00702
22110         BC1   *-12                                       10056 46 10044 00100
22120*          CHECK FOR ADDRESS CHECK
22130         BI    R8E1,3600                                  10068 46 10312 03600
22140*          CHECK FOR 1 SECTOR TRANSFER
22150         BNR   R8E2,RDAREA+100                            10080 45 10348 15100
22160         BNR   *+20,RDAREA+99                             10092 45 10112 15099
22170         B7    R8E2                                       10104 49 10348 00000
22180*          CHECK FOR CORRECT SECTOR
22190         C     RDAREA+4,RDCF+5                            10112 24 15004 10197
22200         BNE   R8E3                                       10124 47 10368 01200
22210*          NEXT SECTOR
22220 R8X2    AM    RDCF+5,01,10                               10136 11 10197 000-1
22230         CM    RDCF+5,620,,         CHK DONE              10148 14 10197 -0620
22240         BNE   R8X1                                       10160 47 10008 01200
22250         BC4   RT08+24                                    10172 46 09984 00400
22260         B7    RT08B                                      10184 49 10720 00000
22270*
22280 RDCF    DDA   ,1,600,1,RDAREA                            10192 00006 1-0600
                                                               10198 00003 -01
                                                               10201 00005 J5000
22290 RESDAT  DSC   25,99999999992334455667788 99              10206 00025
22300         DSC   20,00112233445566778899                    10231 00020
22310         DSC   20,00112233445566778899                    10251 00020
22320         DSC   20,00112233445566778899                    10271 00020
22330         DSC   21,001122334455667788 99,                  10291 00021
22340*
22350*
22360 R8E1    BTM   R8XE,251,911,        TYPE ERROR            10312 17 10392 00K5J
22370         BNC2  R8X1                                       10324 47 10008 00200
22380         B     RSTRT                                      10336 49 00402 00000
22390 R8E2    BTM   R8XE,252,9,          TYPE ERROR            10348 17 10392 00K52
22400         B7    R8E1+12                                    10360 49 10324 00000
22410 R8E3    BTM   R8XE,253,9,          TYPE ERROR            10368 17 10392 00K53
22420         B7    R8E1+12                                    10380 49 10324 00000
22430*
22440*          ERROR ROUTINE
22450*
22460         DS    5                                          10391 00005
```

```
R8XE    BC1  R8XE1                                          10392 46 10500 00100
        RCTY                                                10404 34 00000 00102
        WNTY RSTRT+2,,,          TYPE LOCATION              10416 38 00404 00100
        TD   ERR+14,R8XE-3                                  10428 25 03417 10389
        TD   ERR+16,R8XE-2                                  10440 25 03419 10390
        TD   ERR+18,R8XE-1                                  10452 25 03421 10391
        WATY ERR,,,              TYPE ERROR NUMBER          10464 39 03403 00100
        WATY TR8A                                           10476 39 10583 00100
        TF   TPOUT-1,RDCF+5                                 10488 26 10578 10197
        WNTY TPOUT-5,,,          TYPE S/B SCTR ADRS         10500 38 10574 00100
        BNF  *+20,R8XE-1                                    10512 44 10532 10391
        B7   AAAA                                           10524 49 10568 00000
        WATY TR8B                                           10532 39 10611 00100
        TF   TPOUT-1,RDAREA+4                               10544 26 10578 15004
        WNTY TPOUT-5,,,          TYPE SCTR ADRS RD          10556 38 10574 00100
AAAA    H                                                   10568 48 00000 00000
TPOUT   DC   08,',*                                         10579 00008
R8XE1   BB2                                                 10580 42 00000 00000
TR8A    DAC  14, TRIED TO RD '                              10583 00028
TR8B    DAC  10, RD SCTR '                                  10611 00020
ZZ9     DAC  15,-COMPARE LATCH'                             10631 00030
ZZ10    DAC  19,-RESTORE ADDRESSES'                         10661 00038
ZZ11    DAC  11,-RD SECTOR'                                 10699 00022
*
*       MULTIPLE SECTORS
*
*         THIS ROUTINE CHECKS THAT SEVERAL SUCCESSIVE
*         SECTORS CAN BE READ (21 SECTORS). AFTER THE
*         SECTORS HAVE BEEN READ ALL 21 DUPLICATED SECTOR
*         ADDRESSES (REFER TO PHASE A) ARE CHECKED.
*
RT08B   TFM  RSTRT+6,*,,         LOAD RESTART ADRS          10720 16 00408 J0720
        TFM  RDCF+5,600                                     10732 16 10197 -0600
        TFM  RDCF+8,21,9                                    10744 16 10200 00-21
R8Y1    TF   RDAREA+2100,RMRST                              10756 26 17100 03545
        BTM  INDRST,*,,          RESET INDICATORS           10768 17 02904 J0768
*         READ DISK NUMERIC  (21 SECTORS)
        RDN  RDCF                                           10780 36 10192 00702
        BC1  *-12                                           10792 46 10780 00100
        BNI  *+44,3600,,         CHECK FOR ADRS CHK         10804 47 10848 03600
        BTM  R8BE,254,911,                                  10816 17 11020 00K5M
R8Y3    BNC2 R8Y1                                           10828 47 10756 00200
        B7   RT08                                           10840 49 09960 00000
        BNR  *+24,RDAREA+2100                               10848 45 10872 17100
        BNR  *+32,RDAREA+2099                               10860 45 10892 17099
        BTM  R8BE,255                                       10872 17 11020 -0255
        B7   R8Y3                                           10884 49 10828 00000
*         COMPARE SCTR ADDRESSES
        TFM  *+23,RDAREA+4                                  10892 16 10915 J5004
        C    RDCF+5,99999,,      CHK SCTR ADRS              10904 24 10197 99999
        BNE  R8Y4                                           10916 47 10996 01200
```

```
22980           AM    RDCF+5,01,10                                  10928 11 10197 000-1
22990           AM    *-25,100                                      10940 11 10915 -0100
23000           CM    *-37,RDAREA+2104,,  CHK DONE                  10952 14 10915 J7104
23010           BNE   *-60                                          10964 47 10904 01200
23020 R8Y2      BC4   RT08                                          10976 46 09960 00400
23030           B7    RT09                                          10988 49 11234 00000
23040*
23050 R8Y4      BTM   R8BE,256,,          TYPE ERROR                10996 17 11020 -0256
23060           B7    R8Y3                                          11008 49 10828 00000
23070*
23080*
23090           DS    5                                             11019 00005
23100 R8BE      BC1   R8BE1                                         11020 46 11232 00100
23110           RCTY                                                11032 34 00000 00102
23120           WNTY  RSTRT+2,,,          TYPE LOCATION             11044 38 00404 00100
23130           TD    ERR+14,R8BE-3                                 11056 25 03417 11017
23140           TD    ERR+16,R8BE-2                                 11068 25 03419 11018
23150           TD    ERR+18,R8BE-1                                 11080 25 03421 11019
23160           WATY  ERR,,,              TYPE ERROR NUMBER         11092 39 03403 00100
23170           BNF   *+20,R8BE-1                                   11104 44 11124 11019
23180           B7    R8BE1                                         11116 49 11232 00000
23190*          - DUMP SCTR ADRS
23200           TFM   DR8-1,RDAREA+4                                11124 16 11147 J5004
23210           TF    19999,99999                                   11136 26 19999 99999
23220 DR8       DNTY  19995,,,            DUMP                      11148 35 19995 00100
23230           TFM   19999,0,,           RESET DUMP AREA           11160 16 19999 -0000
23240           SPTY                                                11172 34 00000 00101
23250           AM    DR8-1,100                                     11184 11 11147 -0100
23260           CM    DR8-1,RDAREA+2104,, CHK DONE                  11196 14 11147 J7104
23270           BNE   DR8-12                                       11208 47 11136 01200
23280           H                                                   11220 48 00000 00000
23290 R8BE1     BB2                                                 11232 42 00000 00000
23300*
23310*            THIS ROUTINE CHECKS THE SEEK OPERATION.
23320*            THE MUC (MULTIPLE USE COUNTER) SET CONTROL
23330*            LINES ARE CHECKED,EACH BIT TRIGGER IN THE
23340*            MUC COUNTER,AND THE MECHANICAL LINKAGES
23350*            ARE EXERCISED TO DETERMINE PROPER OPERATION.
23360*
23370*              PHASE   CYL  SCTR ADRS  MUC (100-80-40-20-10-8-4-2 TRIG)
23380*                A      00     00000    00000000
23390*                B      01     00200    00000001
23400*                C      02     00400    00000010
23410*                D      04     00800    00000100      1 = ON
23420*                E      05     01000    00001000      0 = OFF
23430*                F      10     02000    00010000
23440*                G      20     04000    00100000
23450*                H      40     08000    01000000
23460*                I      50     10000    10000000
23470*                J      63     12600    00110011
23480*                K      98     19600    11001011
```

```
23490*              L       99      19800     [illegible]
23500*
23510*          THE SEEK OPERATION IS PERFORMED -
23520*          THEN A READ TRACK IS PERFORMED
23530*          TO READ IN THE SECTOR ADDRESSES AT THE
23540*          CYLINDER THE HEADS WENT TO (ALL PHASES
23550*          EXCEPT CYL 00 AND 99 THE SECTOR
23560*          ADDRESSES READ ARE COMPARED TO THE SECTOR
23570*          ADDRESS IN THE DISK CONTROL FIELD.
23580*          AN ERROR TYPEOUT WILL OCCUR IF THESE
23590*          SECTOR ADDRESSES FAIL TO COMPARE EQUAL.
23600*               ERROR TYPEOUT-
23610*          SEEK TO CYL XX WENT TO CYL YY
23620*
23630 RT09    TFM  RSTRT+6,*,,          LOAD RESTART ADRS      11234 16 00408 J1234
23640         BTM  TYPE,TYPSK,,,        TYPE OPERATION         11246 17 03096 J2011
23650 R8A2    SK   CYLZ,,,              SEEK TO CYL 00         11258 34 03546 00701
23660         TFM  *+23,SKADRS,,        INITIALIZE             11270 16 11293 J1872
23670 R8A1    TF   SDCF+5,99999                                11282 26 11859 99999
23680*          SEEK CYLINDER
23690         SK   SDCF,,,              SEEK                   11294 34 11854 00701
23700*          READ TRACK
23710         CM   *+11,0,10                                   11306 14 11317 000-0
23720         RTN  SDCF                                        11318 36 11854 00706
23730         BE   R8HU,,,              E/Z OFF = HANG UP      11330 46 11438 01200
23740*          HUNG-UP  -  POSITIVE STOP ON SEEK
23750         MM   SDCF+5,05,10                                11342 13 11859 000-5
23760         TD   97,RM                                       11354 25 00097 03545
23770         BTM  ERRN,260,711,,,                             11366 17 03220 -026-
23780         WATY SKHANG                                      11378 39 11987 00100
23790         WNTY 95,,,                TYPE CYL NO.           113 0 38 00095 00100
23800         H                                                11402 48 00000 00000
23810         BNC2 R8A1+12                                     11414 47 11294 00200
23820         B    RT09                                        11426 49 11234 00000
23830*          COMPARE SECTOR ADDRESS
23840 R8HU    SF   RDAREA                                      11438 32 15000 00000
23850         C    SDCF+5,RDAREA+4,,    COMPARE ADDRESSES      11450 24 11859 15004
23860         BNE  R8A3                                        11462 47 11686 01200
23870 R8A4    AM   R8A1+11,05,10,       NEXT PHASE             11474 11 11293 000-5
23880         TF   *+23,R8A1+11                                11486 26 11509 11293
23890         BNR  R8A1,99999,,         CHECK DONE             11498 45 11282 99999
23900*          SEEK TO CYL 99
23910         TFM  SDCF+5,19800                                11510 16 11859 J9800
23920         SK   SDCF,,,              SEEK                   11522 34 11854 00701
23930*
23940*
23950*          THIS SUBPROGRAM WILL CHECK THAT THE P-ADRS
23960*          OF THE SEEK INSTRUCTION CAN BE INDIRECTLY ADDRESSED.
23970*          THIS IS ONLY CHECKED ON THOSE SYSTEMS HAVING THE
23980*          INDIRECT ADDRESSING FEATURE.
23990*          IF IA IS OK,SK TO CYL 50. IF NOT,SK TO CYL 10.
```

```
24000*
24010 RT98    TFM   RSTRT+6,*,,          LOAD RESTART          11534 16 00408 J1534
24020*          CHECK TO DETERMINE IF CPU HAS IA
24030         BNR   NOIA,CKIA,11,        IA = RM,NO IA = DIGIT 11546 45 11666 1203-
24040         SK    CYL3W                                      11558 34 08548 00701
24050 R9S1    SK    IASK,,6,             SK-P ADRS = IND ADRS  11570 34 12030 00701
24060*          READ TRACK AND FIND OUT WHERE HEADS WENT
24070         RTN   CYL3                                       11582 36 03560 00706
24080         SF    RDAREA                                     11594 32 15000 00000
24090         CM    RDAREA+4,10000,,     CHK FOR CYL 50        11606 14 15004 J0000
24100         BE    NOIA                                       11618 46 11666 01200
24110         BTM   ERRN,261,,          TYPE ERROR             11630 17 03220 -0261
24120         BNC2  R9S1                                       11642 47 11570 00200
24130         B     RT09                                       11654 49 11234 00000
24140 NOIA    BC4   R8A2                                       11666 46 11258 00400
24150         B7    RT10                                       11678 49 12074 00000
24160*
24170*              ERROR ROUTINE
24180*
24190 R8A3    BC1   R8A5                                       11686 46 11830 00100
24200         BTM   ERRN,262,711,,,                            116 8 17 03220 -026K
24210         RCTY                                             11710 34 00000 00102
24220         MM    SDCF+3,05,10                               11722 13 11857 000-5
24230         TD    SKER1+2,97,,         INSERT SEEK TO CYL NO.
                                                               11734 25 11951 00097
24240         TD    SKER1+4,98                                 11746 25 11953 00098
24250         MM    RDAREA+2,05,10                             11758 13 15002 000-5
24260         TD    SKER2+2,97,,         INSERT WENT TO CYL NO.
                                                               11770 25 11981 00097
24270         TD    SKER2+4,98                                 11782 25 11983 00098
24280         WNTY  RSTRT+2,,,           TYPE LOCATION         11794 38 00404 00100
24290         WATY  SKER,,,              TYPE ERROR            11806 39 11925 00100
24300         H                                                11818 48 00000 00000
24310 R8A5    BNC2  R8A1+12                                    11830 47 11294 00200
24320         B     RT09                                       11842 49 11234 00000
24330*
24340*          DATA FOR ROUTINE 09
24350*
24360 SDCF    DDA   ,1,99999,020,RDAREA                        11854 00006 1R9999
                                                               11860 00003 -20
                                                               11863 00005 J5000
24370 SKADRS  DSA   00200,400,800,1000,2000,4000,8000,10000,12600,19600
                                                               11872 00005 -0200
                                                               11877 00005 -0400
                                                               11882 00005 -0800
                                                               11887 00005 -1000
                                                               11892 00005 -2000
                                                               11897 00005 -4000
                                                               11902 00005 -8000
                                                               11907 00005 J0000
                                                               11912 00005 J2600
```

```
                                                                  11917 00005 J9600
24380          DC    05,'                                         11922 00005
24390 SKER     DAC   12,-SEEK TO CYL                              11925 00024
24400 SKER1    DAC   15, 99 WENT TO CYL                           11949 00030
24410 SKER2    DAC   04, 99'                                      11979 00008
24420 SKHANG   DAC   12, SK TO CYL '                              11987 00024
24430 TYPSK    DAC   08, - SEEK'                                  12011 00016
24440*           DATA FOR PHASE  B
24450 CKIA     DSA   CKIARM                                       12030 00005 J2031
24460 CKIARM   DC    01,'                                         12031 00001
24470          DC    04,0046,,            ADRS = 00460            12035 00004
24480 IASK     DDA   ,0,2000,20,RDAREA                            12036 00006 0-2000
                                                                  12042 00003 -20
                                                                  12045 00005 J5000
24490 ZZ12     DAC   12,-GM CONTROL'                              12051 00024
24500*
24510*
24520*           THIS ROUTINE CHECKS THE GROUP MARK LATCH
24530*           AND ALSO THE WLR/RBC RESET
24540*           WITH GROUP MARK CONTROL.
24550*                          FUNCTION
24560*                           GROUP MARK LATCH,EVEN POSITION
24570*                           GROUP MARK LATCH,ODD  POSITION
24580*                           WLR-TRACK OP,LATE CYCLE GM - WLR/RBC RESET
24590*                           WLR-SCTR OP,LATE CYCLE GM - WLR/RBC RESET
24600*                           RBC- DISK/MEMORY COMPARE - WLR/RBC RESET
24610*
24620*
24630 RT10     TFM   RSTRT+6,*,,          LOAD RESTART            12074 16 00408 J2074
24640          BTM   TYPE,ZZ12,,          TYPE  GM CNTRL          12086 17 03096 J2051
24650          TFM   CYL3+5,600                                   12098 16 03565 -0600
24660          SK    CYL3,,,              SEEK TO CYL 03          12110 34 03560 00701
24670*
24680*           PUT A GM ON DISK IN THE EVEN POSITION
24690*
24700 R10D     RDN   CYL3,,,              READ DATA               12122 36 03560 00702
24710          TDM   RDAREA+75,7,,        RESET ODD GM            12134 15 15075 00007
24720          TD    RDAREA+74,DATAA,,    INSERT GM               12146 25 15074 00811
24730          WDN   CYL3,,,              WRITE GM                12158 38 03560 00702
24740*
24750*           READ DATA WITH EVEN GM,WLR OP
24760*
24770 R10A     TF    RDAREA+76,RMRST,,    RESET RD AREA           12170 26 15076 03545
24780          BTM   INDRST,,,            RESET INDICATORS        12182 17 02904 -0000
24790          RDGN  CYL3,,,              RD DISK,WLR OP          12194 36 03560 00700
24800          BC1   *-12                                         12206 46 12194 00100
24810*           CHECK THAT GM STOPPED DATA XFER
24820          BNR   *+20,RDAREA+75,,     CHK FOR RM              12218 45 12238 15075
24830          B7    RT10A                                        12230 49 12274 00000
24840          BTM   ERRN,270,,           GO TYPE ERROR           12238 17 03220 -0270
24850          BNC2  R10A                                         12250 47 12170 00200
```

DT 0023
PN 2172366
EC 412531

```
24860          B     RT10                                          12262 49 12074 00000
24870*
24880*           PUT A GM ON DISK IN THE ODD POSITION
24890*
24900 RT10A    RDN   CYL3                                          12274 36 03560 00702
24910          TDM   RDAREA+74,7,,          RESET EVEN GM         12286 15 15074 00007
24920          TD    RDAREA+75,DATAA,,      INSERT GM             12298 25 15075 00811
24930          WDN   CYL3,,,                PUT ODD GM ON DISK    12310 38 03560 00702
24940*           READ DATA WITH ODD GM,WLR OP
24950 R10B     TF    RDAREA+77,RMRST                             12322 26 15077 03545
24960          BTM   INDRST,,,              RESET INDICATORS      12334 17 02904 -0000
24970          RDGN  CYL3,,,                RD DISK,WLR OP        12346 36 03560 00700
24980          BC1   *-12                                          12358 46 12346 00100
24990*           CHECK THAT ODD GM STOPPED DATA XFER
25000          BNR   *+20,RDAREA+76,,       CHK FOR RM            12370 45 12390 15076
25010          B7    R10E                                          12382 49 12426 00000
25020          BTM   ERRN,271,,             GO TYPE ERROR         12390 17 03220 -0271
25030          BNC2  R10B                                          12402 47 12322 00200
25040          B     RT10                                          12414 49 12074 00000
25050*           RESET GM-S ON DISK PACK
25060 R10E     RDN   CYL3                                          12426 36 03560 00702
25070          TDM   RDAREA+74,7,,                                 12438 15 15074 00007
25080          TDM   RDAREA+75,7,,                                 12450 15 15075 00007
25090          WDN   CYL3                                          12462 38 03560 00702
25100*
25110          TD    RDAREA+2100,DATAA,,    INSERT GM AT END OF DATA
                                                                   12474 25 17100 00811
25120 R11C     BTM   INDRST,,,              RESET INDICATORS      12486 17 02904 -0000
25130          RTGN  CYL3,,,                WLR-TRACK OP          12498 36 03560 00704
25140          BC1   *-12                                          12510 46 12498 00100
25150          BNI   R11D,3700,,,                                  12522 47 12570 03700
25160          BTM   ERRN,272,,             GO TYPE ERROR         12534 17 03220 -0272
25170          BNC2  R11C                                          12546 47 12486 00200
25180          B     RT10                                          12558 49 12074 00000
25190*
25200*
25210 R11D     TD    RDAREA+2000,DATAA,,    INSERT GM AT END OF RECORD
                                                                   12570 25 17000 00811
25220          BTM   INDRST,,,              RESET INDICATORS      12582 17 02904 -0000
25230          RDGN  CYL3,,,                WLR-SECTOR OP         12594 36 03560 00700
25240          BC1   *-12                                          12606 46 12594 00100
25250          BNI   R11F,3700                                     12618 47 12666 03700
25260          BTM   ERRN,273,,             GO TYPE ERROR         12630 17 03220 -0273
25270          BNC2  R11D                                          12642 47 12570 00200
25280          B     RT10                                          12654 49 12074 00000
25290*
25300*
25310 R11E     BTM   INDRST,,,              RESET INDICATORS      12666 17 02904 -0000
25320          CDGN  CYL3,,,                RBC                   12678 36 03560 00701
25330          BC1   *-12                                          126 0 46 12678 00100
25340          BNI   R10C,3700                                     12702 47 12750 03700
```

```
25350          BTM  ERRN,274,,          GO TYPE ERROR          12714 17 03220 -0274
25360          BNC2 R11E                                       12726 47 12666 00200
25370          B    RT10                                       12738 49 12074 00000
25380 R10C     BC4  RT10+24                                    12750 46 12098 00400
25390*
25400*
25410*                ROUTINE   12
25420*
25430*           THIS ROUTINE FORCES ALL THE DISK
25440*           ERROR LATCHES TO TURN ON. ALSO ANY DISK
25450*           IND (39) IS CHECKED THAT IT IS TURNED ON.
25460*                PHASE      INDICATOR       METHOD
25470*                  A          36       NO MATCHING SCTR ADRS
25480*                  B          38       RD 21 SCTR WITH HD 9
25490*                  C          37       NO TERMINAL GM  (WLR)
25500*                  D          37       DATA UNEQUAL (RBC)
25510*                  E          19       IND 36 TURNS ON IND 39
25520*
25530*
25540 RT12     TFM  RSTRT+6,*,,         LOAD RESTART ADRS      12762 16 00408 J2762
25550          BTM  TYPE,ZZ13,,         TYPE  FORCE ERROR LATCHES
                                                                12774 17 03096 J3409
25560          SK   CYL3,,,             SEEK TO CYL 03         12786 34 03560 00701
25570*
25580*
25590 R12A     BTM  INDRST,,,           RESET INDICATOR        12798 17 02904 -0000
25600          RDN  ADRSCK,,,           READ DISK-FORCE ADRS CHK
                                                                12810 36 03574 00702
25610          BC1  *-12                                       12822 46 12810 00100
25620          BNI  R12A1,3900                                 12834 47 12894 03900
25630          BI   R12B,3600,,         ADRS CHK               12846 46 12926 03600
25640 R12A2    BTM  ERRN,280,,          GO TYPE ERROR          12858 17 03220 -0280
25650          BNC2 R12A                                       12870 47 12798 00200
25660          B    RT12                                       12882 49 12762 00000
25670 R12A1    BNI  R12A2,3600,,        ADRS CHK               12894 47 12858 03600
25680          BTM  ERRN,281,,          GO TYPE ERROR          12906 17 03220 -0281
25690          B7   R12A2+12                                   12918 49 12870 00000
25700*
25710*
25720 R12B     BTM  INDRST,,,           RESET INDICATORS       12926 17 02904 -0000
25730          RDN  CYLOV,,,            FORCE OVFLO            12938 36 13394 00702
25740          BC1  *-12                                       12950 46 12938 00100
25750          BNI  R12B1,3900,,        ANY DISK               12962 47 13022 03900
25760          BI   R12C,3800,,         OVFLO CHK              12974 46 13054 03800
25770 R12B2    BTM  ERRN,282,,          GO TYPE ERROR          12986 17 03220 -0282
25780          BNC2 R12B                                       12998 47 12926 00200
25790          B    RT12                                       13010 49 12762 00000
25800 R12B1    BNI  R12B2,3800,,        OVFLO CHK              13022 47 12986 03800
25810          BTM  ERRN,283,,          GO TYPE ERROR          13034 17 03220 -0283
25820          B7   R12B2+12                                   13046 49 12998 00000
25830*
```

DT 0023
PN 2172366
EC 412531

```
25840*
25850 R12C   BTM  INDRST,,,          RESET INDICATORS       13054 17 02904 -0000
25860        TDM  RDAREA+2000,0,,    INSURE NO TERM, GM     13066 15 17000 00000
25870        RDGN CYL3,,,            READ DISK - WLR,NO GM  13078 36 03560 00700
25880        BC1  *-12                                      13090 46 13078 00100
25890        BNI  R12C1,3900,,       ANY DISK               13102 47 13162 03900
25900        BI   R12D,3700,,        WLR CHK                13114 46 13194 03700
25910 R12C2  BTM  ERRN,284,,         GO TYPE ERROR          13126 17 03220 -0284
25920        BNC2 R12C                                      13138 47 13054 00200
25930        B    RT12                                      13150 49 12762 00000
25940 R12C1  BNI  R12C2,3700,,       WLR CHK                13162 47 13126 03700
25950        BTM  ERRN,285,,         GO TYPE ERROR          13174 17 03220 -0285
25960        B7   R12C2+12                                  13186 49 13138 00000
25970*
25980*
25990 R12D   BTM  INDRST,,,          RESET INDICATORS       13194 17 02904 -0000
26000        TDM  RDAREA+1000,,,     CHANGE DATA            13206 15 16000 00000
26010        CDN  CYL3,,,            COMPARE DATA           13218 36 03560 00703
26020        BI   R12E,3700                                 13230 46 13278 03700
26030        BTM  ERRN,286,,         GO TYPE ERROR          13242 17 03220 -0286
26040        BNC2 R12D                                      13254 47 13194 00200
26050        B    RT12                                      13266 49 12762 00000
26060*
26070 R12E   BTM  INDRST,,,          RESET INDICATORS       13278 17 02904 -0000
26080*
26090        RDN  ADRSCK,,,          TURN ON ADRS CHK,ANY DISK
                                                            13290 36 03574 00702
26100        BC1  *-12                                      13302 46 13290 00100
26110        BI   R12E1,1900,,       CHK THAT IND 19 WAS TURNED ON
                                                            13314 46 13362 01900
26120        BTM  ERRN,287,,         GO TYPE ERROR          13326 17 03220 -0287
26130        BNC2 R12E                                      13338 47 13278 00200
26140        B    RT12                                      13350 49 12762 00000
26150 R12E1  BI   *+12,3600                                 13362 46 13374 03600
26160        BC4  RT12+24                                   13374 46 12786 00400
26170        B7   RT13                                      13386 49 13446 00000
26180*         DATA FOR ROUTINE 12
26190 CYLOV  DDA  ,1,780,21,RDAREA                          13394 00006 1-0780
                                                            13400 00003 -21
                                                            13403 00005 J5000
26200 ZZ13   DAC  19,-FORCE ERR LATCHES,                    13409 00038
26210*
26220*
26230*
26240*         MAR 8 BIT 10K
26250*
26260*
26270 RT13   TFM  RSTRT+6,*,,        LOAD RESTART ADRS      13446 16 00408 J3446
26280        BTM  TYPE,ZZ14,,        TYPE  MAR 8 BIT 10K    13458 17 03096 J3637
26290*         THIS PHASE CHECKS THE MAR 10 THOU
26300*         8 BIT LATCH IN THE 1311.
```

```
26310 MISCB1 BTM  INDRST,,,          RESET INDICATORS      13470 17 02904 -0000
26320        CM   *+11,0,10                                13482 14 13493 000-0
26330        RDN  SA80K,,,           SCTR ADRS OF 80 K     13494 36 13622 00702
26340        BC1  *-12                                     13506 46 13494 00100
26350        NOP                                           13518 41 00000 00000
26360        BI   *+36,1200,,         CHECK FOR HANG-UP    13530 46 13566 01200
26370 ZAB    BTM  ERRN,290,,         GO TYPE ERROR         13542 17 03220 -0290
26380        B    MISCB1                                   13554 49 13470 00000
26390        BI   ZAB,800,,     CHECK MAR 8 BIT 10K 1710   13566 46 13542 00800
26400        BC4  RT13+24                                  13578 46 13470 00400
26410        BTM  INDRST,,,          RESET INDICATORS      135 0 17 02904 -0000
26420        BC3  WLP1,,,                                  13602 46 04008 00300
26430        B7   CMPLTD                                   13614 49 13666 00000
26440*         DATA FOR MISC ROUTINE
26450 SA80K  DDA  ,1,88888,001,RDAREA                      13622 00006 10B888
                                                           13628 00003 -01
                                                           13631 00005 J5000
26460 ZZ14   DAC  15,-MAR 8 BIT 10K'                       13637 00030
26470*
26480*              TEST COMPLETE ROUTINE
26490*
26500 CMPLTD TFM  RSTRT+6,CMPLTD                           13666 16 00408 J3666
26510        RCTY                                          13678 34 00000 00102
26520        BTM  REFN,54,10,           GO TYPE REF   M    13690 17 03164 000N4
26530        RCTY                                          13702 34 00000 00102
26540        WATY DONE                                     13714 39 13759 00100
26550        TFM  RSTRT+6,START                            13726 16 00408 -3616
26560        H                                             13738 48 00000 00000
26570        B7   START                                    13750 49 03616 00000
26580*         TYPEOUTS
26590 DONE   DAC  15,TEST COMPLETED'                       13759 00030
26600        DAC  02,00                                    13789 00004
26610 INVP   DC   03,0,*                                   13791 00003
26620        DS   160                                      13951 00160
26630 LAST   DC   01,0                                     13952 00001
26640        DEND START                                    03616
```